FLOOD MAP MODERNIZATION

An essential component of the

Hazards Framework

of the

OREGON GIS UTILITY
navigatOR

Data Assessment and Conceptual Design Report

October 26, 2005

TABLE OF CONTENTS

Page

Section 1. Introduction....2
- 1.1 GIS Utility Initiative....2
- 1.2 Hazards Framework....2
- 1.3 Flood Map Modernization....2
- 1.4 Purpose and Context of this Report....3

Section 2. Data Assessment....4
- 2.1 Base Data Required....4
- 2.2 Data Surveys....4
- 2.3 Base Data Needed....5
- 2.4 Data GAP Analysis....6
- 2.5 Closing the Gap....8
- 2.6 Recommendations for Fund Leveraging....9

Section 3. Conceptual Design....12
- 3.1 Business Function and Services....12
- 3.2 System Configuration Concept....12
- 3.3 Organization....12
- 3.4 Technology....13
- 3.4 Human Resources....17
- 3.5 Estimated Costs....18

Section 4. References....19

List of Tables

Table A: Summary of Survey Responses.... App
Table B: Status of Base Data.... 7
Table C: Detailed Technology Recommendations.... App

List of Figures

Figure 1: Map of Flood Hazard Base Data Readiness.... 7
Figure 2: navigatOR Architecture.... 15
Figure 3: Proposed Map Modernization Architecture.... 16

SECTION 1
INTRODUCTION

1.1 GIS UTILITY INITIATIVE

GIS Utility is a shorthand name for the institutional and technical environment that will enable consistent, efficient statewide geographic information sharing in support of the business needs of the entire public and private sectors in Oregon. The GIS Utility is not simply a system, a program, or an organization. It is an umbrella initiative that weaves together systems, organizations, and people to meet critical goals: more effective sharing of and access to geographic information and services, efficient data maintenance, and ongoing collaboration in projects and programs that rely on location-based information for decision-making.

The Oregon Geospatial Enterprise Office (GEO) of the Information Resource Management Division-Department of Administrative Services is leading the GIS Utility initiative. Currently, the initiative is in Phase 1 which involves development of a business case and a design and plan for subsequent development and operations.

1.2 HAZARDS FRAMEWORK

The Hazards Framework is a component of the GIS Utility. It consists of data, technology, and methodology used by people in agencies across Oregon to assess, manage, and mitigate natural hazards. In addition to flood hazard data, the Hazards Framework contains data relating to earthquakes, various storm types, volcanic eruptions, and other natural hazards. Existing floodplain data are inadequate in many ways and for some areas do not exist at all in digital format. The FEMA flood map modernization program is expected to address these deficiencies.

1.3 FLOOD MAP MODERNIZATION

Planning for, mitigating, and insuring against flood hazards are critical activities in many Oregon communities. The flood map modernization program in Oregon will provide current, quality data and information that will underpin informed decision making and enable the best possible prevention strategies to be discovered. While FEMA funding may largely only support digital conversion of existing Flood Insurance Rate Maps (FIRMs), Oregon's vision goes beyond digital conversion to include redelineation of floodplains based on best available data, performance of new engineering studies in some areas, and correction and updating of information on existing FIRMs after conversion. Changes to existing floodplain boundaries and base flood elevations may result from

these activities. Currently, no state funding is available for flood map modernization, but the need to explore revenue options is recognized. (See also Section 2.6.)

To accomplish the Framework vision, Oregon will use the guidelines and many of the tools provided by the Federal Emergency Management Agency (FEMA) in the national flood map modernization effort. The nature of the effort, especially its public safety aspects, demands innovative organizational, technical and funding solutions to address data development, integration, maintenance, distribution, and access challenges. This report will address each of these challenges and estimate the cost of implementation and continuing services. The GEO Team has assembled the information in this report primarily from information gathered prior to and during Phase 1 of the GIS Utility initiative, from FEMA documents and previous plans and reports written for this effort, and from personal communications with key DLCD personnel and FEMA contractors.

1.4 PURPOSE AND CONTEXT OF THIS REPORT

This report identifies existing and needed data for flood hazard mapping, along with a conceptual design for long-term system development. It will help guide the flood map modernization effort in Oregon. It is also the basis for preparing a multi-year budget and implementation plan.

SECTION 2
DATA ASSESSMENT

2.1 BASE DATA REQUIRED

The Oregon Department of Land Conservation and Development (DLCD), together with participation from key members of the GIS and hazard-mapping community, has identified base (reference) data required for flood map modernization in Oregon. DLCD 2004; Titan 2004.

Geodetic Control
Bench Marks (permanent)
Political Boundaries
Transportation
Hydrography
Orthoimagery
Elevation (complete, with improved accuracy)
Public Land Survey System (PLSS)
USGS 7.5 Minute Quadrangle Boundaries
Feature Names (from GNIS database)

2.2 DATA SURVEYS

A survey conducted as a part of the 2005 GIS Utility Business Case gathered information about existing geospatial data in Oregon. That survey, together with an earlier survey conducted in late 2003, provides a good picture of existing geospatial base data. The results indicate that data exists for each required theme, although scale or resolution, accuracy, currency, completeness, and documentation are issues to varying degrees for each.

Table A (see appendix) is a summary of existing base data. The table is grouped by entity, mostly counties, with a value of 1, 2, 3 or X for each base data element. A 1 indicates the data is ready to use, a 2 indicates the data exists but needs some additional work, and a 3 means that the data either does not exist or needs extensive work to be usable. Within Table A, Xs appear where data exists, but not enough information is known to determine usability. No information has been collected for certain counties and some reporting jurisdictions did not provide a full response for each data element.

Roads and surface water are not included in the table because statewide data of sufficient quality to support the flood hazard mapping effort will be available statewide by January 2006. In addition, statewide digital orthophotoquads will provide current 0.5-meter imagery over all jurisdictions by the end of this year or early 2006. Of course,

jurisdictions may use current, higher resolution imagery where available. The Public Land Survey System is available statewide for horizontal reference, and the Geographic Coordinate Data Base is complete in many areas. Little digital information about hydraulic structures and no information about significant landforms or other features (like landmarks) is known to be available at this time. However, many of these features are included on the existing FIRM maps, and digital capture will occur during the map modernization process.

2.3 BASE DATA NEEDED

A broad discussion of GIS data needs throughout Oregon is captured in the *Technology and Data Inventory Gap Analysis Report*, Part B (October 2005), prepared for the GIS Utility. Echoing the state agency picture, some local governments have mature GIS programs and data sets, while others have little or nothing. Special data challenges of local jurisdictions include the larger scales and more detailed data sets required for urban geographies and more demanding data maintenance requirements. Availability and usability are common challenges that encompass completeness, currency, access (discovery and technology), use restrictions, and capacity to utilize data once obtained (personnel and technology). Along with availability and usability, it is important to ensure that each jurisdiction use the best available data for their geography.

FEMA has set forth minimum data standards for resolution, horizontal accuracy, projection, datum, scale, thematic separation, currency, metadata, and use restrictions. While some of these standards present no significant hurdle, others will be more of a challenge. Survey responses indicate that much of the base data exists but needs work to meet FEMA's minimum standards. The most prevalent inadequacy of existing data is a lack of metadata. Curing this aspect of existing data will boost many elements from "needs work" to "ready to use." The biggest concern here is that essential pieces of information needed for metadata may be irretrievable. The remaining data issues are more difficult to cure, and some data may need to be developed from original sources. In some cases, the uncertainty associated with the lack of metadata or significant accuracy deficits justifies not using part or all of an existing data set. In that event, data recapture will be necessary using applicable standards. In this context, confidence in the elevation data is especially critical. Although not all jurisdictions have responded to the surveys, we expect similar issues and gaps throughout the state.

For the jurisdictions that responded to either or both surveys, it is a simple matter to determine approximate data status and needs by scanning each county group in Table A. This level of knowledge is sufficient to begin planning and scheduling map modernization. FEMA contractors are currently conducting a county-by-county assessment to provide a complete and current picture for Oregon. This assessment will determine the status of FIRMS, the availability of base data, what data to use, and what data to convert or collect.

After completing the assessment, FEMA contractors will develop scoping documents and project proposals for map modernization in each county. Close coordination with state and local government representatives will be required to develop the documents.

FEMA has developed a funding sequence for counties in Oregon. See http://www.fema.gov/fhm/mh_appa_ver1_5.shtm#region10 (for the Multiyear Flood Hazard Identification Plan - MHIP.) According to this plan, Clatsop, Lane, Morrow, Umatilla, and Washington Counties have ongoing projects despite what appear to be data inadequacies. Columbia, Coos, Curry, and Tillamook counties are identified for fiscal year 2006 starts but also appear to have data limitations. Adjustments to the MHIP sequencing may be appropriate based on the information about readiness factors provided herein. DLCD, GEO, and FEMA need to discuss these issues as soon as possible.

2.4 DATA GAP ANALYSIS

In order for all jurisdictions to participate successfully in the flood hazard mapping effort, base data of sufficient quality must be available at the time modernization is scheduled for funding and implementation. Currently, jurisdictions run the gamut from well-documented, good-quality geospatial data to some usable data, to cities and counties with little or no usable data. This section addresses the geographic extent of complete, usable data sets and completion status by data element. The next section lays out the time needed to complete base data sets at current rates, and an estimate of the maximum feasible reduction in completion time possible using accelerated approaches. Additional gaps exist but are not addressed in detail in this report. These are skills and knowledge, technology (hardware, software, networks, etc.), and the competition of other programs and purposes for the same capabilities and infrastructure. See *Technology and Data Gap Analysis Report*, 2005.

Completed Base Data. The Oregon Framework data effort is delivering good quality, statewide spatial base data sets that will be available for use in this map modernization effort. However, in some locales, better data may exist and be used instead. With regard to local data, the only surveyed jurisdiction in Oregon with a complete set of geospatial data meeting FEMA specifications for flood hazard mapping is the City of Albany in Linn County. Several cities and counties are close to having complete, high quality data, such as Clackamas County; an active mapping project is occurring there. Figure 1 is a map of the relative flood hazard mapping base data readiness aggregated by county. In some cases, FEMA data quality standards for accuracy or resolution may need to be relaxed somewhat in order to proceed with projects. We anticipate this occurring more in rural or undeveloped areas managed by federal agencies. FEMA contractors will be making this determination when they perform assessments and develop a plan for each jurisdiction. The state, via DLCD and GEO, hope to play a role in such decision-making.

Completion Status by Data Element. Table B sets forth the status of each base data element required for flood map modernization.

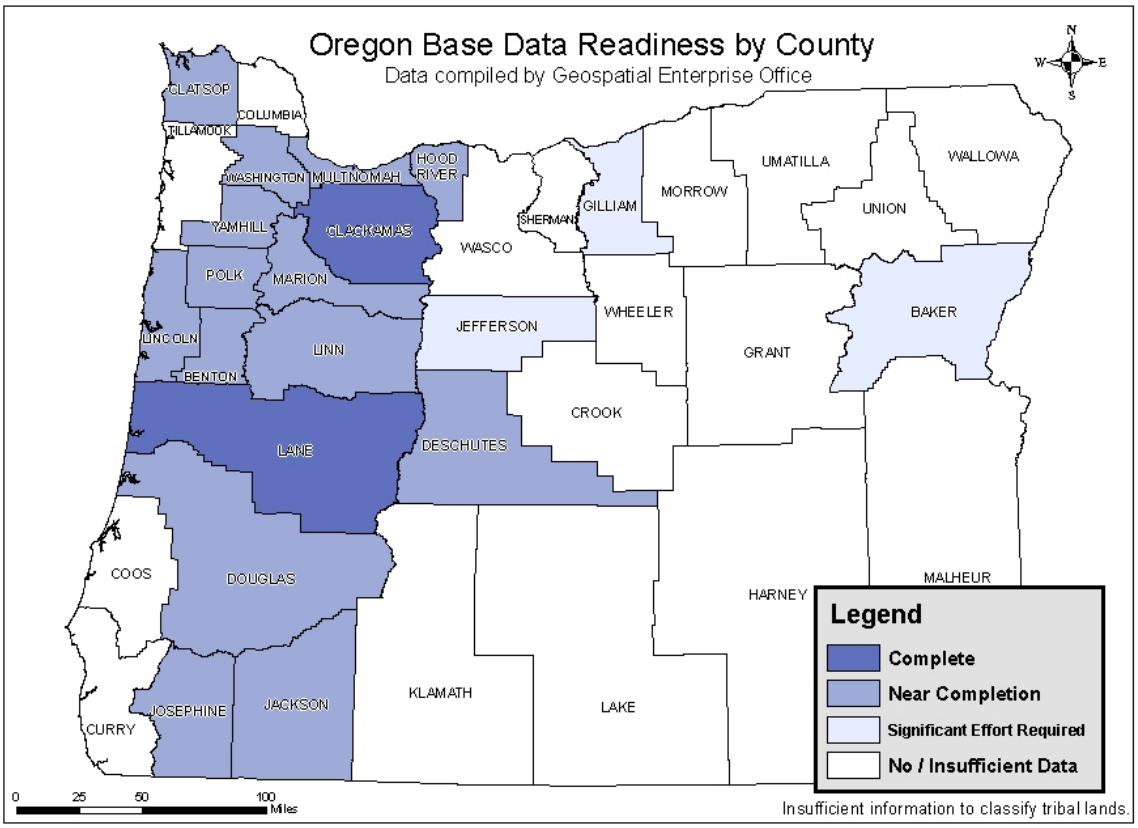

Figure 1.

Table B. Status of Base Data

Theme	Complete-Count	Complete-Percent	In Development-Count	In Development-Percent	In Planning Stage-Count	In Planning Stage-Percent
Bridges and Culverts	43	60%	22	31%	7	10%
City Boundary	71	88%	10	12%	0	0%
Contours	46	84%	7	13%	2	4%
County Boundary	58	85%	9	13%	1	1%
Other Lands Boundaries (both surveys)	8	19%	17	40%	n/d	n/d
Digital Elevation Model	49	82%	11	18%	0	0%
Digital Orthophotography	80	85%	10	11%	4	4%
Elevation	60	82%	11	15%	2	3%
Geodetic Control/Survey Monument	46	52%	36	40%	7	8%
Hydrography	54	69%	22	28%	2	3%
Transportation (roads and rail)	58	71%	19	23%	5	6%

2.5 CLOSING THE GAP

The following describe strategies developed to address most of the gaps mentioned in the previous section. Potential funding for these strategies is addressed in Section 2.6.

Data Completion Strategy. Oregon proposes to use an innovative and flexible approach ("mobile GIS") to accelerate data preparation for flood map modernization. This approach requires at least one GIS analyst to deploy to jurisdictions (physically, virtually or a combination of both) for one- to three-month assignments. As conceived, assignments would be made based on need, current sequencing and willingness of hosts to accept assistance. Deployments would focus effort on integrating better local data, where available, into the map modernization process. Jurisdictions would be able to influence assignment to their area by implementing certain measures and taking defined steps indicating their willingness and readiness. Competitive application, structured to reveal the readiness of any particular applicant jurisdiction, could also be used to prioritize assignments. Having two mobile GIS analysts on the team would significantly reduce the time required to complete map modernization work in Oregon. Each mobile GIS Analyst would need to be equipped with a laptop, software and other appropriate technology permitting work from any Oregon location.

Time Needed to Complete Map Modernization. At current rates, we estimate it could take up to five years for 75% of local governments to acquire or develop the necessary data to address FEMA data specifications. The remaining 25% could take up to eight years. These estimates assume that data sets remain current in the interim. The bulk of map modernization as currently conceived would be completed sometime in Year 4.

Estimate of Maximum Time Reduction. To accelerate the map modernization effort, we must provide additional resources to base data development and flood hazard mapping. Using innovative strategies to accomplish acceleration, we estimate that complete data sets could be developed for all jurisdictions in Oregon within three years. Flood hazard mapping could proceed first in areas where the data is currently ready or nearly so. During that time, jurisdictions with moderate data integration issues can be curing data quality inadequacies, while efforts get underway in counties with little or no existing local data. Implementing this approach requires the hiring of additional flexible GIS analyst personnel for mobile deployment. Fast track project management strategies would need to be employed to assure coordination and maximize time reductions. These measures would shorten program length from five-to-eight years to about three years, with completed map modernization lagging only slightly behind the data development timeline.

Readiness Assessment. A positive readiness assessment should be in place before advancing a jurisdiction to active assistance status. Our vision is to have assessments performed by FEMA contractors submitted for review and comment by the Map Modernization Coordinating Workgroup. The Workgroup could then make recommendations regarding readiness and targeting of efforts to address gaps. This

approach better ensures that jurisdictions approaching their scheduled time are ready to proceed or are rescheduled in as timely a fashion as possible. This step is designed to minimize scheduling impacts that can adversely affect timely completion.

Baseline Costs. According to the *Business Plan* (DLCD 2004), a preliminary cost estimate for providing state support services to the flood map modernization effort in Oregon is from $1.22 to $1.38 million for a five-year schedule (DLCD 2004, p. 28). This report's minimal recommendation is estimated at $1.45 million over five years, with an annual cost of $285,200 for each year beyond Year 5.

Acceleration Scenario. Accelerating map modernization requires additional GIS analyst resources. In addition to the staffing recommended in the *Business Plan*, two mobile analysts would be needed for deployment during maximum program implementation. In order to conserve resources, we advocate a nuanced approach so that the addition of a second analyst occurs only after the first reaches capacity sometime in year 1, maintaining a full complement in year 2 and, if necessary, the beginning of year 3. The other mobile GIS analyst position would phase out by the end of year 3. Acceleration would result in a savings of approximately $82,000 and significantly quicker completion, enabling resources to be redeployed for fulfillment of other critical missions.

Addressing Other Gaps. Both minimal and accelerated approaches permit some educational effort. The accelerated approach brings more focus to developing skills and knowledge among program participants. According to the most current information available, FEMA contractors are responsible for assembling and converting existing FIRMs. Each jurisdiction will have unique technology (hardware, software, networks, etc.) issues; these will be addressed, to the extent possible, in the plan developed by FEMA contractors in concert with local partners. A major risk that is tricky to mitigate is the competition of other programs and purposes for the same capabilities and infrastructure. For a full discussion of risk management and mitigation for the GIS Utility, see *Project Risk Identification and Mitigation Plan* (PlanGraphics, Oregon GIS Utility Project, May 2005).

2.6 RECOMMENDATIONS FOR FUND LEVERAGING

Given the current trend in government budgets, low-resourced counties and cities in Oregon will continue to struggle to participate in this important aspect of service delivery and decision-making. At the state and federal level, funding allocation is shifting from land and resource management programs to public safety and health, emergency management, and domestic security programs. Given this environment, there are several strategies for leveraging funds for initial data development, subsequent maintenance and targeted remapping.

Traditional Funding Mechanisms. Federal grant and match programs have been a traditional source of funding for geospatial data development, documentation, management and access. These funds continue to be available on a competitive basis

through FGDC, USGS, EPA and others. More opportunities have issued recently from the Bureau of the Census and FEMA. Occasionally, agency consortiums provide limited funding streams. Such is the case with the orthoimagery project, one of the base data elements required for flood map modernization. Now, program-based funding is increasingly available for domestic security and emergency preparedness activities. Some needs can be addressed within this domain, but the specific objectives of each funding stream can adversely impact timing, data content and scale, and the use of human resources and technology.

In order to capture grant and match program funds, applicants must have access to grant writing skills, the capacity to administer the funds, meet reporting requirements and, in the case of match programs, matching funds. Strategies for gaining consistent access to these prerequisites are keys to success. One approach would be to provide the human resources and institutional capabilities through the program management unit in DLCD or the GEO team in DAS. Match requirements could be satisfied on a sliding scale that meets an overall match rate requirement. With this approach, jurisdictions with greater resources invest at higher match rates, while those with fewer resources participate at lower match rates.

Innovative Funding Strategies. Recent forums have identified four categories of funding to support geospatial activities, including data development: revenue from existing taxes, revenue produced from service fees, cost savings and internal budgeting (Joffe 2005). Most of these strategies can be employed here. As Oregon's tax lot information (ORMAP) becomes available online, a portion of increased economic activity in the form of tax revenues could be set aside for further geospatial data development. Other possibilities in this vein are bounty fees for undertaxed properties and increased revenues from better location information (such as cell towers). Moreover, ORMAP funding is a workable model to generate a new revenue stream. A similar approach may be appropriate for map modernization. In that case, part of the document recordation fee supports the geospatial activities directly benefiting land records administration and the ORMAP program. A similar approach for map modernization involves adding a fee to all flood insurance policies to support flood hazard mapping.

Value-added data and application subscription fees offer additional revenue possibilities. Purchasing data development services from jurisdictions with mature GIS programs willing and able to leverage their investment in infrastructure and talent is a viable solution, which would create a revenue stream for some jurisdictions. Local government groupings include regional governments for its member jurisdictions, counties for small or all cities within its boundaries, a prime city for its entire county or smaller cities in the same county, and adjacent counties for some or all of a neighboring county. Regional service centers are part of the GIS Utility Conceptual Design and could build on GIS capabilities already present in each area, such as at educational institutions.

Cost savings that begin to accrue from enterprise use of geospatial data could be captured and returned to GIS departments rather than consumed by the program realizing the savings. This approach requires an accounting process to track and transfer the savings.

Examples are coordinating utility and road projects to avoid multiple digs, and improved flood-risk boundaries resulting in lower flood insurance rates for some and required flood insurance for others newly recognized at risk. This approach has particular appeal because agencies could begin to capture the efficiencies realized throughout their organizations, creating a positive feedback loop. An alternative approach shares any savings 50/50 or other agreed-upon proportion so that everyone has something to gain.

One budget strategy for funding geospatial activities has already worked in Oregon state government: allocation of a percentage of agency budgets to fund statewide coordination efforts. Local governments are using a similar approach for spatial data development. Another budget strategy currently employed by some jurisdictions involves allocations from the general fund to support geospatial activities. In line with other utility infrastructure funding strategies, capital improvement bonds could raise funds for base data development and related expenses.

In summary, funding is critical to timely completion of map modernization in Oregon. Many approaches exist; the state may look to the Map Modernization Coordinating Workgroup (described in section 3.3, below) as a group that could explore and recommend a blend of strategies.

SECTION 3
CONCEPTUAL DESIGN

This section presents a conceptual design for the Flood Hazard Mapping Framework. The aspects covered are business function and services, organization, technology, staffing, and estimated costs. The principles contained in the *Conceptual Design* (PlanGraphics 2005) for the GIS Utility are applicable here, with specifics from the *Business Plan* (DLCD 2004). Overall system configuration includes system administration, data stewardship, a portal, distributed web services, and GIS data users.

3.1 BUSINESS FUNCTION AND SERVICES

Generating current, accurate, and accessible flood-hazard maps requires an array of services. The essential services required by the Flood Hazard Mapping Framework are helping data developers achieve data standards and document data sets; collecting, integrating and maintaining data and maps; and distributing data and maps. Additional services include outreach and education, data and mapping status tracking, technology transfer and, perhaps, interactive mapping application development and support. DLCD and the Map Modernization Coordinating Workgroup (described in section 3.3) will adapt existing tools, methodologies and standards developed by FEMA based on Oregon needs. FEMA will be responsible for issuing letters of map change.

3.2 SYSTEM CONFIGURATION CONCEPT

Overall system configuration echoes that described for the GIS Utility in Section 3 of the *Conceptual Design* (PlanGraphics 2005). Flood Map Modernization governance and stewardship are broadly sketched in the *Business Plan* (DLCD 2004).

3.3 ORGANIZATION

Governance. A Map Modernization Coordinating Workgroup will provide overall guidance for the map modernization program in Oregon. DLCD will re-establish and likely expand the workgroup that assisted with development of the business plan. A meeting of the partner organizations will establish the number, membership criteria, emplacement mechanism, term of service, and provision for replacement or temporary substitution. The primary activities of the Workgroup appear on page 22 of the *Business Plan* (DLCD 2004). Initial meetings of the Workgroup will establish meeting frequency and administrative and logistical details. Subsequent meetings will be devoted to the substance of flood map modernization.

Stewardship. In order to provide continuity and crucial services that cannot be delivered by individual data custodians, DLCD will be designated and documented as a durable primary steward to implement policy, perform stewardship duties (including resolving data integration issues), and generally oversee the day-to-day aspects of the system. As primary steward, DLCD will be the principal contact for FEMA and other non-Oregon partners and have the responsibility for meeting federal specifications, standards and time lines regarding flood hazard mapping. It will operate in concert with GEO and the foundational propositions and documents of the GIS Utility and adhere to best practices for data stewardship set forth in *Geographic Data Stewardship Best Practices* (PlanGraphics, 2005).

3.4 TECHNOLOGY

A robust technology infrastructure is required to provide the necessary services to custodians, consumers and primary partners. To meet this requirement, we recommend leveraging the physical architecture and human capabilities residing at the State Data Center (SDC). More specifically, this includes tapping currently unused storage capacity, server potential, and the administrative capabilities and data security and integrity measures in place there.

Map Modernization Process. The goal of the map modernization program is to develop one DFIRM geodatabase for every county, including the incorporated cities within the county (Witten, T. 2005, pers. comm. 10/14). Each county DFIRM geodatabase will incorporate all data necessary to create the DFIRM panels, including elements from base data sets that are more current than that depicted on the scanned maps. For example, if corporate limits for a city have expanded since the FIRM creation date, the new corporate limit is substituted. Most base data sets (e.g., corporate limits, PLSS, county boundaries) will require both a polygon and line feature class due to labeling constraints of the software. Creating these “cartographic echoes” can occur prior to uploading to the Mapping Information Platform (MIP) or online using the DFIRM tools.

DLCD/GEO will make base data sets available for each county, clipped to each county boundary. These will be in State Plane NAD83 and available in a variety of formats, including Shapefile, MapInfo and .e00. DLCD/GEO will likely have a role in assessing whether local data sets will be used in place of statewide data sets.

Currently base data are used with the DFIRM Tools after uploading to the MIP. However, information from FEMA headquarters (Rooney, P., 2005, pers. comm. 10/7) indicates that base data eventually will be served to the DFIRM Tools application within MIP via Web Mapping Services (WMS). While the GIS Utility portal, navigatOR, will initially act as a repository for statewide base data sets, making these data sets available to Cooperating Technical Partners (CTPs) for upload to MIP, that role may expand to serving the base data via WMS.

Software. Purchasing certain software licenses is necessary to carry out flood map modernization. GIS software is required to facilitate assessment of local and statewide base data and possibly modification of local base data prior to uploading to the state server. We recommend ArcGIS ArcView 9.1. Minimum operating system requirements include Windows 2000 Professional or XP Professional. ArcView installations will occur on all laptops or desktops, as appropriate, for the map modernization team at DLCD.

Our recommended approach provides for DFIRM creation using FEMA's online tools accessed by logging into the MIP. No GIS software is required on the client (user) side. All GIS functionality provided by the MIP is served through a Citrix client via Web browser. Each user logging in to the MIP starts a remote session of ArcGIS on FEMA's MIP server.

An automated workflow tool guides the user through the process of creating a DFIRM. FEMA will provide scanned FIRMs (some minimal cost may be involved), which will serve as the base for digitizing floodplain boundaries, BFEs, cross-sections, and related features. Scanned FIRMs must be georeferenced prior to any digitizing. Georeferencing and digitizing are accomplished entirely in the DFIRM Tools application. Training is required to gain login access to the MIP and to use the DFIRM Tools. Training is provided free of charge to state agency CTPs. (Witten, T. 2005, pers. comm. 10/13).

A free Citrix client must be downloaded and installed prior to logging in to the MIP. FEMA recommends Citrix Client 9.0 Web Version for Windows. Minimum browser requirements to utilize the MIP with Citrix client are as follows:

WIN 2000, XP, CE.NET - IE 5.5 SP2 or later
WIN 2000, Linux Solaris - Netscape 7 or later
Mac OS X - Safari 1.0 or later, IE 5.21.

Hardware/Architecture.
navigatOR, the GIS Utility Portal
The portal and associated servers will soon be installed. This core hardware includes the following (Figure 2):

Application Server 1: ArcIMS (WMS Connector), ESRI Portal Toolkit, IMS DDE (Data Delivery Engine) and ArcGIS Server with custom applications.
Application Server 2: ArcSDE and SQL Server
Data Server 1: SDE/ SQL Server Databases, Backups
Data Server 2: Hitachi SAN mass storage device. Additional Data Storage

Figure 2. navigatOR Architecture

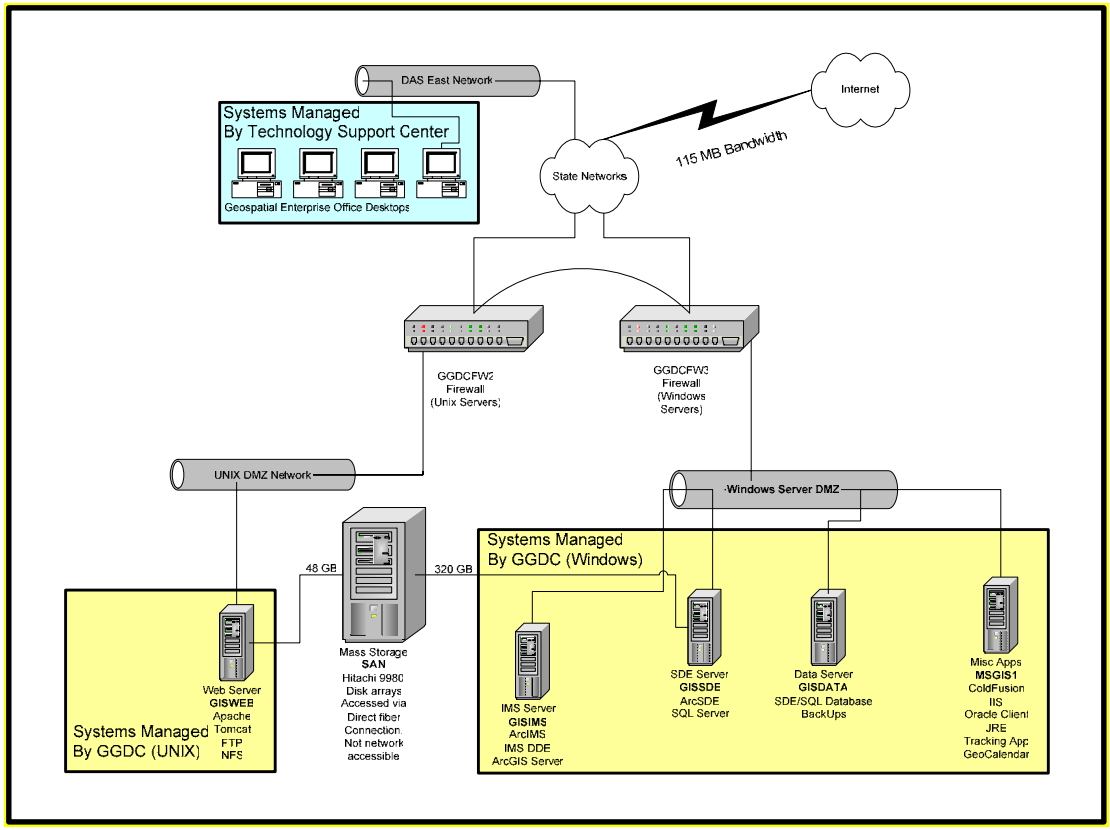

The DLCD Map Modernization Team Members. Due to the statewide nature of the map modernization project, we recommended that the Flood Hazard Mapping Coordinator, Assessment Education and Outreach Officer, and all GIS analyst positions, whether stationary or mobile (as proposed in the accelerated staffing plan), be equipped with state-of-the-art laptop computers. We anticipate that the System Adminstrator and Web Administrator roles will be accomplished using a desktop computer. Minimum requirements for these machines to run ArcGIS ArcView 9.1 are Intel-PC Processor, 512 MB RAM, 1GHz CPU. Individual recommendations and estimated costs are set forth in Table C (attached).

Proposed Map Mod Architecture. Figure 3 depicts our recommended map modernization architecture.

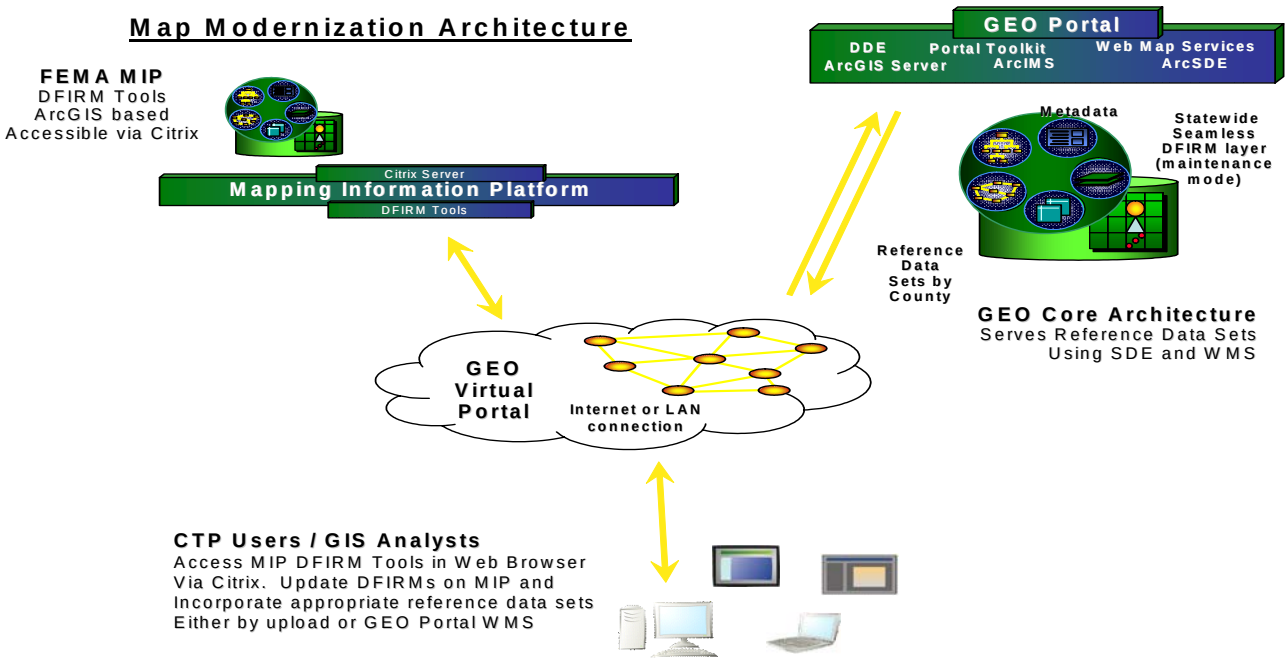

Figure 3.

Maintenance Mode. Once map modernization is complete for each county, that county's DFIRMs enter maintenance mode. All DFIRMs, as PDF documents, will be hosted by the MIP. Since there is likely to be a delay in the edit and approval process with FEMA, GEO will host a real-time database containing the most current data available and showing proposed edits to relevant DFIRM elements, as administered by DLCD. This will facilitate local floodplain management and informed decision-making by potential developers based on best available data. Edits approved by FEMA will be updated in the real-time database. Once all counties are complete, DLCD and GEO will create a seamless statewide DFIRM data set. Meanwhile, DLCD and GEO will develop a maintenance plan and create a capability that permits local partners to maintain their base and flood data as a continuing service.

Services. A substantial subset of the Web-based services identified in Table 3-2 of the GIS Utility *Conceptual Design* will be necessary to support the Flood Hazard Mapping Framework. A portal accessible via the GIS Utility portal (navigatOR) may leverage an existing portal. Any portal will adhere to the basic design principles and best practices set forth in Section 3.2.2 of the *Conceptual Design*. Hosting services will be provided by the SDC for a mutually agreeable cost.

Technical assistance, education, periodic training sessions, and coaching will be provided as needed, to the extent resources permit.

3.4 HUMAN RESOURCES

Staffing such an effort is a significant commitment. These staffing recommendations assume that portal development and data maintenance responsibilities remain with Oregon participants. A minimum staffing during data development and initial map modernization is as follows:

Development Phase

Title/Role	FTE	
Flood Hazard Mapping Coordinator	1	(assists with E&O)
Assessment, Education & Outreach Officer	1	
System Administrator/Web Administrator	.5	(assumes FEMA portal)
GIS Programmer/Analyst	1	
Total	3.5 FTEs	

We estimate it will take three to eight years for Oregon to complete one pass of flood map modernization with the minimal configuration. This does not address the critical maintenance component.

Development Phase (accelerated)

Optimal staffing accelerates the completion of statewide flood-hazard mapping, estimated at about three years. The recommendation for optimal staffing is as follows:

Title/Role	FTE	
Flood Hazard Mapping Coordinator	1	(assists with E&O)
Assessment, Education & Outreach Officer	1	
System Administrator/Web Administrator	.5	
Web Developer	1	(assumes Oregon portal)
GIS Programmer/Analyst	.5	
GIS Analysts (mobile)	2	
Total	6.0 FTEs	

Maintenance Phase

Assuming the implementation of an Oregon portal, staffing configuration for maintenance (transition beginning late in Year 3) would be as follows:

Title/Role	FTE	
Flood Hazard Mapping Coordinator	1	(performs E&O duties)
System Administrator/Web Administrator	.5	
Data Administrator/Integrator	.25	
GIS Programmer/Analyst	.25	
GIS Technician	1	
Total	3.0 FTEs	

3.5 ESTIMATED COSTS

Estimated costs for development and maintenance of flood hazard maps in Oregon are as follows:

Development Phase

	People	$285,200 annually, or $1,426,000 over 5 years
	Technology	$24,000
Total	$1,450,000	

Development Phase (accelerated)

	People	$424,000 Years 1 & 3, $486,000 Year 2, or $1,334,000
	Technology	$34,000
Total	$1,368,000	

Maintenance Phase

	People	$241,250 annually
	Technology	$1,600 annual software maintenance
Total	$243,000	

SECTION 4
REFERENCES

Federal Emergency Management Agency. *Appendix K, Guidelines and Specifications for Flood Hazard Mapping Partners*. April 2003.

Joffe, Bruce. *Ten Ways to Support GIS Without Selling Data*, Journal of the Urban and Regional Information Systems Association. Vol. 16 no. 2. 2005.

Oregon Department of Land Conservation & Development (for FEMA). *Flood Map Modernization, Business Plan for Oregon*. March 2004.

PlanGraphics, Inc. (for OGIC). Oregon GIS Utility Project, Phase 1 (draft) documents, *Technology and Data Inventory for the Public Sector GIS Community, Technology and Data Inventory Gap Analysis Report, Conceptual Design, Geographic Data Stewardship Best Practices, Project Risk Identification and Mitigation Plan.* May-October 2005.

PlanGraphics, Inc. (for OGIC). Spatial Data Survey, 2005.

Titan Geospatial Services (for DLCD). Natural Hazard Data Survey. 2004.

Titan Geospatial Services (for DLCD). *Business Planning for FEMA Flood Map Modernization Effort.* 2004.

University of Oregon (for DLCD). Draft Ch. 2, *Oregon Hazards Theme Needs Assessment.* 2005.

APPENDIX

(Tables A & C)