Nationwide Permit #5 Application

Wave Energy Test Project at the Northwest National Marine Renewable Energy Center

March 27, 2012

PREPARED FOR:
Northwest National Marine Renewable Energy Center
Oregon State University
204 Rogers Hall
Corvallis, OR 97331

PREPARED BY:
Pacific Energy Ventures, LLC
1211 NW Gilsan Street, Suite 204
Portland, OR 97205

CONTENTS

COVER LETTER

JOINT PERMIT APPLICATION FORM

COASTAL ZONE CERTIFICATION: STATEMENT OF CONSISTENCY

ATTACHMENTS

1. PROJECT PURPOSE AND DESCRIPTION
2. PROJECT DRAWINGS AND FIGURES
3. INSTALLATION, REMOVAL AND DECOMMISSIONING
4. OPERATIONS AND MAINTENANCE
5. NAVIGATIONAL LIGHTING
6. SPILL CONTINGENCY AND EMERGENCY RESPONSE
7. OCEAN SENTINEL INSTRUMENTATION BUOY TECHNICAL PAPER
8. PROPOSED MONITORING AND ADAPTIVE MANAGEMENT
9. ENVIRONMENTAL BASELINE STUDIES
10. THREATENED, ENDANGERED AND CANDIDATE SPECIES IN OREGON
11. BIOLOGICAL ASSESSMENT

Northwest National Marine Renewable Energy Center-OSU
Oregon State University, 204 Rogers Hall, Corvallis, Oregon 97331-6001
Phone 541-737-9492 | **Fax** 541-737-2600 | http://nnmrec.oregonstate.edu

March 20, 2012

Ms. Debra Henry
Biologist/Regulatory Project Manager
United States Army Corps of Engineers
Portland District Regulatory Office
333 SW First Avenue
Portland, OR 97204-3495

Subject: Nationwide Permit #5 Application

Dear Ms. Henry,

The Northwest National Marine Renewable Energy Center (NNMREC) at Oregon State University (OSU) is hereby submitting the enclosed Joint Permit Application to the United States Army Corps of Engineers (the Corps) to request a Nationwide Permit #5 for a research project off the coast of Oregon.

The proposed project involves deploying a Wave Energy Technology New Zealand (WET-NZ) device, an Ocean Sentinel instrumentation buoy, a TRIAXYIS wave measurement buoy, and environmental monitoring equipment in an open-water setting to perform off-grid testing. The purpose of this project is to inform the design, deployment and testing of these technologies, study potential environmental effects, and support the market development of environmentally sustainable technologies that harness renewable energy to generate electricity. The development and deployment of renewable energy technologies such as those that capture energy from ocean waves is a stated policy of the State of Oregon.

The project site is located approximately two (2) miles off the coast of Oregon within the State Territorial Sea. Activities will be limited to the 1-square nautical mile site; the boundaries of the project site are listed in Attachment 1: Project Purpose and Description, and the coordinates marking the locations of the project structures are listed in Block 2 of the Joint Permit Application form. The first deployment is planned for this summer, for a period of approximately three months between July 1 and September 30, 2012. Upon conclusion of testing at the end of the summer, the WET-NZ, Ocean Sentinel and TRIAXYIS devices would be removed; the mooring systems would remain in place so that the devices could be deployed for a second test period in the summer of 2013. Upon conclusion of testing in the summer of 2013, the devices will be removed. All project components, including the mooring systems, will be removed before the expiration of the Nationwide Permit authorization period.

In addition to authorization from the Corps, the applicant is also seeking the following approvals for the project:

- Removal-Fill Permit (Oregon Department of State Lands)
- Temporary Use Authorization (Oregon Department of State Lands)
- Private Aids to Navigation Permit (U.S. Coast Guard)

A Statement of Consistency is included with this application, along with a request to the Oregon Department of Land Conservation and Development for a Consistency Determination. The Oregon Department of Environmental Quality (DEQ) has issued advance Water Quality Certification (WQC) under Section 401 of the Clean Water Act for activities authorized under Nationwide Permit #5, subject to the specific water quality conditions and criteria provided by DEQ. As of March 19, 2012, the Nationwide permits were reissued, and DEQ is in the process of completing their WQC process for the reissued permits. In pre-application conversations with DEQ representatives about WQC for the proposed project, we were advised that if the project is authorized with Nationwide Permit #5, then it qualifies for advance 401 WQC by complying with the conditions and criteria previously provided by DEQ for the Nationwide Permits. NNMREC agrees to comply with the conditions provided by DEQ and acknowledges that the District Engineer, State or Tribal authority may require additional water quality management measures for the project.

If you have any questions or require further information, please feel free to contact me at (541) 737-9492 or via email at belinda.batten@oregonstate.edu.

Sincerely,

[redacted]

Belinda Batten, PhD
Director, NNMREC

Joint Permit Application Form

US Army Corps Of Engineers (Portland District)

DATE STAMP

AGENCIES WILL ASSIGN NUMBERS

Corps Action ID Number

Oregon Department of State Lands No

SEND ONE SIGNED COPY OF YOUR APPLICATION TO EACH AGENCY

US Army Corps of Engineers:
District Engineer
ATTN: CENWP-OD-GPPO
Box 2946
Portland, OR 97208-2946
503-808-4373

AND

DSL - West of the Cascades:
State of Oregon
Department of State Lands
775 Summer Street, Suite 100
Salem, OR 97301-1279
503-986-5200

OR

DSL - East of the Cascades:
State of Oregon
Department of State Lands
1645 NE Forbes Road, Suite 112
Bend, Oregon 97701
541-388-6112

AND

Send DSL Application Fees to:
State of Oregon
Department of State Lands
PO Box 4395, Unit 18
Portland, OR 97208-4395
(Attach a copy of the first page of the application)

(1) APPLICANT INFORMATION

Applicant Name and Address	Northwest National Marine Renewable Energy Center at Oregon State University Belinda Batten 204 Rogers Hall Corvallis, OR 97331	Business Phone # Home Phone # Fax # Email	(541) 737-9492 (541) 737-2600 belinda.batten@oregonstate.edu
Authorized Agent Name and Address Check one Consultant ☒ Contractor ☐	Pacific Energy Ventures Justin Klure 1211 NW Gilsan St., Suite 204 Portland, OR 97205	Business Phone # Home Phone # Fax # Email	(503) 475-2999 (888) 892-8332 jklure@peventuresllc.com
Property Owner Name and Address	State of Oregon Christopher Castelli Oregon Dept. of State Lands 775 Summer St. NE, Suite 100 Salem, OR 97301	Business Phone # Home Phone # Fax # Email	503-986-5262 503-378-4844 chris.castelli@state.or.us

(2) PROJECT LOCATION

Street, Road or Other Descriptive Location		Legal Description (attach *tax lot map**)			
The closest roads to the project site are Highway 101 & NW 60th. The nearest beach access Agate Beach, approximately 75 mi from Winchester Bay.		Township	Range	Section	Quarter/Quarter
In or near (City or Town)	County	Tax Map #		Tax Lot #	
Newport	**Lincoln**	N/A		N/A	
Wetland/Waterway (pick one)	River Mile (if known)	Latitude (in DD.DDDD format)		Longitude (in DD.DDDD format)	
Pacific Ocean	**N/A**	Ocean Sentinel N44.6957 Wet-NZ Device N44.6950 TriAXYS Buoy N44.6952		W124.1265 W124.1277 W124.1284	
Directions to the site	The project site is located in the Pacific Ocean approximately 2 mi off the Oregon coast. The closest harbor is Newport, which is located approximately 4 mi (as the crow flies) away, or about 6 nautical miles (nm) by boat.				

(3) PROPOSED PROJECT INFORMATION

Type: Fill ☒ Excavation (removal) ☐ In-Water Structure ☒ Maintain/Repair an Existing Structure ☐

Brief Description: Total estimated area of fill for the project is 1535.5 ft^2 (equivalent to 0.035 acres). Please see Project Fill Summary in Attachment 2: Project Drawings and Figures for details.

Fill

Riprap ☐ Rock ☐ Gravel ☐ Organics ☐ Sand ☐ Silt ☐ Clay ☐ Other: ☒

Wetlands	Permanent (cy)	Temporary (cy)						Total cubic yards for project (including outside OHW/wetlands)	N/A
	0	0							
	Impact Area in Acres	Dimensions (feet)							
	0	L'	0	W'	0	H'	0		
Waters below OHW	Permanent (cy)	Temporary (cy)						Total cubic yards for project (including outside OHW/wetlands)	**122.1 y^3**
	0	**122.1 y^3**							
	Impact Area in Acres	Dimensions (feet) **See Project Description**							
	0.035	L'		W'		H'			

Removal

Wetlands	Permanent (cy)	Temporary (cy)						Total cubic yards for project (including outside OHW/wetlands)	N/A
	Impact Area in Acres	Dimensions (feet)							
		L'		W'		H'			
Waters below OHW	Permanent (cy)	Temporary (cy)						Total cubic yards for project (including outside OHW/wetlands)	N/A
	Impact Area in Acres	Dimensions (feet)							
		L'		W'		H'			

Total acres of construction related ground disturbance (If 1 acre or more a 1200-C permit may be required from DEQ) 21.62

Is the disposal area upland? Yes ☐ No ☐ N/A

Impervious surface created? <1 acre ☒ >1 acre? ☐

	Yes	No
Are you aware of any state or federally listed species on the project site?	x	
Are you aware of any Cultural/Historic Resources on the project site?		x
Is the project site within a national Wild & Scenic River?		x
*Is the project site within a State Scenic State Scenic Waterway?**		x

If yes, please explain in the project description (in block 4)

(4) PROPOSED PROJECT PURPOSE AND DESCRIPTION

Purpose and Need:

*Provide a description of the public, social, economic, or environmental benefits of the project along with any supporting formal actions of a public body (e.g. city or county government), as appropriate.**

Please see Attachment 1: Project Purpose and Description

Project Description:

Please describe in detail the proposed removal and fill activities, including the following information:

Volumes and acreages of all fill and removal activities in waterway or wetland separately
Permanent and temporary impacts
Types of materials (e.g., gravel, silt, clay, etc.)
How the project will be accomplished (i.e., describe construction methods, equipment, site access)
Describe any changes that the project may make to the hydraulic and hydrologic characteristics (e.g., general direction of stream and surface water flow, estimated winter and summer flow volumes.) of the waters of the state, and an explanation of measures taken to avoid or minimize any adverse effects of those changes.

Is any of the work already complete? Yes ☐ No ☒ If yes, please describe the completed work: N/A

Please see Attachment 1: Project Purpose and Description

Project Drawings

State the number of project drawing sheets included with this application: **Twelve (12); please see Attachment 2: Project Drawings and Figures.**

A complete application must include a location map, site plan, cross-section drawings and recent aerial photo as follows and as applicable to the project:

Location map (must be legible with street names)

Site plan including;
Entire project site and activity areas
Existing and proposed contours
Location of ordinary high water, wetland boundaries or other jurisdictional boundaries
Identification of temporary and permanent impact areas within waterways or wetlands
Map scale or dimensions and north arrow
Location of staging areas
Location of construction access
Location of cross section(s), as applicable
Location of mitigation area, if applicable

Cross section drawing(s) including;

Existing and proposed elevations
Identification of temporary and permanent impact areas within waterways or wetlands
Ordinary high water and/or wetland boundary or other jurisdictional boundaries
Map scale or dimensions

Recent Aerial photo (1:200, or if not available for your site, the highest resolution available)

Will any construction debris, runoff, etc., enter a wetland or waterway? Yes ☐ No ☒

If yes, describe the type of discharge and show the discharge location on the site plan.

N/A

Estimated project start date:	**July 1, 2012**	Estimated project completion date:	**July 1, 2014**

(5) PROJECT IMPACTS AND ALTERNATIVES

Alternatives Analysis:

Describe alternative sites and project designs that were considered to avoid or minimize impacts to the waterway or wetland. (Include alternative design(s) with less impact and reasons why the alternative(s) were not chosen. Reference OAR 141-085-0565 (1) through (6) for more information).*

The project site was identified through consultation and cooperation with interested groups and individuals, including the Northwest National Marine Renewable Energy Center (NNMREC) research team, Hatfield Marine Science Center (HMSC), Fisherman Interested in Natural Energy (FINE), and Oregon Sea Grant. Over a 24-month period, NNMREC conducted a comprehensive site selection process to identify site criteria that represent stakeholder needs and interests and meet design parameters essential to the proposed project operations. NNMREC used those criteria to compare potential locations and select a site that minimizes potential project impacts. During the site selection process, NNMREC narrowed its consideration away from areas that did not meet the essential criteria for site selection, or would otherwise be infeasible based on the desirable established criteria. Some of the considerations heard during the outreach process were that it would be best not to have the site directly off of Yaquina Head for visual reasons and because fishing boats coming south to Newport generally turn towards the Newport jetties directly off of Yaquina Head so that a site south would be in a higher traffic area. The site selected meets all of the necessary criteria, including: water depth of approximately 180 ft; exposure to unobstructed ocean waves with high energy resources; comparatively low levels of marine traffic but highly visible to marine navigation; proximity to a port for device deployment, maintenance, and recovery (if needed); sufficiently distant from the Yaquina River mouth to avoid hydraulic sediment transport or other technical issues related to proximity to the river; and out of the direct westerly line-of-sight from Yaquina Head to avoid aesthetic impacts. Additional factors considered in selection of the project site were interest and support of the project from Federal, State, Tribal, Non-Governmental Organizations, local fishing and crabbing groups, and coastal industry and project partners.

Measures to Minimize Impacts

Describe what measures you will use (before and after construction) to minimize impacts to the waterway or wetland. These may include but are not limited to the following:

For projects with ground disturbance include an erosion control plan or description of other best management practices (BMP's) as appropriate. (For more information on erosion control practices see DEQ's Oregon Sediment and Erosion Control Manual)

For work in waterways where fish or flowing water are likely to be present, discuss how the work area will be isolated from the flowing water.

If native migratory fish are present (or were historically present) and you are installing, replacing or abandoning a culvert or other potential obstruction to fish passage, complete and attach a statement of how the Fish Passage Requirements, set by the Oregon Department of Fish and Wildlife will be met.

A rigorous site selection process was used to identify a site that can support project operations with minimal impacts, and NNMREC performed various environmental studies to characterize the existing site conditions (Attachment 9: Environmental Baseline Studies). In addition, measures to minimize impacts have been incorporated into the project plans, as described in the Project Description, Operations and Maintenance, Spill Contingency and Emergency Response, and Monitoring and Adaptive Management (see Attachments 1, 4, 6, and 8, respectively). Further, conservation measures to avoid and/or minimize any adverse effects of the proposed project are identified throughout the Biological Assessment (Attachment 11).

Description of resources in project area

Ocean ☐ Estuary ☒ River ☐ Lake ☐ Stream ☐ Freshwater Wetland ☐

Describe the existing **physical and biological characteristics** of the wetland/waterway site by area and type of resource (Use separate sheets and photos, if necessary).

For wetlands, include, as applicable:
*Cowardin and Hydrogeomorphic(HGM) wetland class(s)**
*Dominant plant species by layer (herb, shrub, tree)**
Whether the wetland is freshwater or tidal
*Assessment of the functional attributes of the wetland to be impacted**
Identify any vernal pools, bogs, fens, mature forested wetland, seasonal mudflats, or native wet prairies in or near the project area.)

For waterways, include a description of, as applicable:
*Channel and bank conditions**
*Type and condition of riparian vegetation**
*Channel morphology (i.e., structure and shape)**
*Stream substrate**
Fish and wildlife (type, abundance, period of use, significance of site)
*General hydrological conditions (e.g. stream flow, seasonal fluctuations)**

Please see the Biological Assessment (Attachment 11) for descriptions of the physical and biological resources at the project site.

*Describe the existing **navigation, fishing and recreational** use of the waterway or wetland.**

Spatial data on human uses of the Oregon Territorial that has been complied into the Oregon Marine Map show that the project site is not used for wildlife viewing, whales watching, recreational boating, or other ocean recreation activities (i.e., kayaking, surfing, swimming, SCUBA diving, snorkeling and skim boarding).Charter and recreational fishing vessels operate out ports north and south of the project site (Depoe Bay and Newport, respectively), but marine traffic in the area is comparatively low (Source: http://oregon.marinemap.org ; accessed March 16, 2012). Although the project site is located in an area considered to be valuable fishing grounds, NNMREC engaged in close coordination and consultation with the commercial fishing industry during the site selection process to minimize potential space-use conflicts.

NNMREC began coordinating with the Fisherman Interested in Natural Energy (FINE) group in April 2009 to identify an area for the proposed project would minimize impacts on the fishing industry. NNMREC has met with FINE on 13 occasions to date; in the last of these meetings, NNMREC and FINE agreed on a final site that meets the needs of the project and minimizes impacts on the fishing industry. This site was posted in the Newport Times on April 26, 2011, and the Oregonian on April 20, 2011, for final consideration by the public. After a 30-day period no objections were voiced. The site location was then registered with the Oregon Department of Land Conservation and Development for inclusion in the Oregon Territorial Sea Plan.

Site Restoration/Rehabilitation

*For temporary disturbance of soils and/or vegetation in waterways, wetlands or riparian areas, please discuss how you will restore the site after construction including any monitoring, if necessary**

Disturbance of soils may occur within the project site during the placement of the anchors. It is anticipated that this disturbance will only occur within the footprint of the anchors and their immediate vicinity and will be limited in duration. No disturbance of the sea bottom is anticipated outside of the project site. Given the small spatial and temporal scale of the proposed project, as well as the temporary nature of the structures and activities, it is anticipated that site restoration/rehabilitation will not be necessary.

Mitigation

*Describe the reasonably expected adverse effects of the development of this project and how the effects will be mitigated.**

- *For permanent impact to wetlands, complete and attach a Compensatory Wetland Mitigation (CWM) Plan. (See OAR 141-085-0705 for plan requirements)**
- *For permanent impact to waters other than wetlands, complete and attach a Compensatory Non-Wetland Mitigation (CNWM) plan (See OAR 141-085-0765 for plan requirements)**
- *For permanent impact to estuarine wetlands, you must submit a CWM plan.**

No adverse effects are expected from this project. Non-toxic materials will be used in the construction and installation and installation of all project components, and the mooring systems employed will be standard maritime. Given the small spatial and temporal scale of the proposed project, as well as the temporary nature of the structures and activities, it is anticipated that mitigation will not be necessary.

Mitigation Location Information (Fill out only when mitigation is proposed or required)

Proposed mitigation *(Check all that apply):*	☐ *Onsite Mitigation*	*Type of mitigation:*
	☐ *Offsite Mitigation*	☐ *Wetland Mitigation*
	☐ *Mitigation Bank*	☐ *Mitigation for impacts to other waters*
	☐ *Payment to Provide*	☐ *Mitigation for impacts to navigation, fishing, or recreation*

Street, Road or Other Descriptive Location	*Legal Description (attach tax lot map*)*			
	Quarter/Quarter	*Section*	*Township*	*Range*

In or near (City or Town)	*County*	*Tax Map #*	*Tax Lot #*
Wetland/Waterway (pick one)	*River Mile (if known)*	*Latitude (in DD.DDDD format)*	*Longitude (in DD.DDDD format)*

Name of waterway/watershed/HUC	*Name of mitigation bank (if applicable)*

(6) ADDITIONAL INFORMATION

Adjacent to R-F Site and Physical Mitigation Site Property Owners and Their Address *(if more than 5, attach printed labels*)*

N/A

Has the proposed activity or any related activity received the attention of the Corps of Engineers or the Department of State Lands in the past, e.g., wetland delineation, violation, permit, lease request, etc.?

Yes ☐ No ☒

If yes, what identification number(s) were assigned by the respective agencies:

Corps #		State of Oregon #	

Has a wetland delineation been completed for this site? *Yes* ☐ *No* ☒

*If yes by whom?**	

Has the wetland delineation been approved by DSL or the COE? *Yes* ☐ *No* ☐

If yes, attach a concurrence letter. *

N/A

(7) CITY/COUNTY PLANNING DEPARTMENT AFFIDAVIT
*(TO BE COMPLETED BY LOCAL PLANNING OFFICIAL) **

I have reviewed the project outlined in this application and have determined that:

- ☐ This project is not regulated by the comprehensive plan and land use regulations.
- ☐ This project is consistent with the comprehensive plan and land use regulations.
- ☐ This project will be consistent with the comprehensive plan and land use regulations when the following local approval(s) are obtained.
- ☐ Conditional Use Approval
- ☐ Development Permit
- ☐ Other

This project is not consistent with the comprehensive plan. Consistency requires a

- ☐ Plan Amendment
- ☐ Zone Change
- ☐ Other

An application has ☐ has not ☐ been filed for local approvals checked above.

Local planning official name (print)	Signature	Title	City / County	Date

Comments:

(8) COASTAL ZONE CERTIFICATION *

If the proposed activity described in your permit application is within the Oregon coastal zone, the following certification is required before your application can be processed. A public notice will be issued with the certification statement, which will be forwarded to the Oregon Department of Land Conservation and Development for its concurrence or objection. For additional information on the Oregon Coastal Zone Management Program, contact the department at 635 Capitol Street NE, Suite 150, Salem, Oregon 97301 or call 503-373-0050.

CERTIFICATION STATEMENT

I certify that, to the best of my knowledge and belief, the proposed activity described in this application complies with the approved Oregon Coastal Zone Management Program and will be completed in a manner consistent with the program.

Print /Type Name	Title
BELINDA BATTEN	DIRECTOR, NNMREC, OREGON STATE UNIV
Applicant Signature	Date
[redacted]	3/20/12

(9) SIGNATURES FOR JOINT APPLICATION

Application is hereby made for the activities described herein. I certify that I am familiar with the information contained in the application, and, to the best of my knowledge and belief, this information is true, complete, and accurate. I further certify that I possess the authority to undertake the proposed activities. By signing this application I consent to allow Corps or Dept. of State Lands staff to enter into the above-described property to inspect the project location and to determine compliance with an authorization, if granted. I hereby authorize the person identified in the authorized agent block below to act in my behalf as my agent in the processing of this application and to furnish, upon request, supplemental information in support of this permit application.

I understand that the granting of other permits by local, county, state or federal agencies does not release me from the requirement of obtaining the permits requested before commencing the project. *I understand that payment of the required state processing fee does not guarantee permit issuance. The fee for the state application must accompany the application for completeness.*

Amount enclosed	*$405.00*

Print /Type Name	Title	Print /Type Name	Title
BELINDA BATTEN	DIRECTOR		
Applicant Signature	Date	**Authorized Agent Signature**	Date
[redacted]	3/20/12		

Landowner signatures: *For projects and /or mitigation work proposed on land not owned by the applicant, including state-owned submerged and submersible lands, please provide signatures below. A signature by the Department of State Lands for activities proposed on state-owned submerged/submersible lands only grants the applicant consent to apply for authorization to conduct removal/fill activities on such lands. This signature for activities on state-owned submerged and submersible lands grants no other authority, express or implied.*

Print /Type Name	Title	Print /Type Name	Title
	DSL		
Property Owner Signature	Date	**Mitigation Property Owner Signature**	Date

March 16, 2012

Ms. Juna Hickner
Coastal State-Federal Relations Coordinator
Oregon Coastal Management Program
Oregon Department of Land Conservation and Development
635 Capitol St. NE, Suite 150
Salem, OR 97301-2540

Subject: Request for Coastal Zone Management Plan Consistency Determination for Northwest National Marine Renewable Energy Center Wave Energy Test Project

Dear Ms. Hickner,

The Northwest National Marine Renewable Energy Center (NNMREC) at Oregon State University (OSU) proposes to perform off-grid testing of a wave energy conversion device to 1) support the design, deployment and testing of this wave energy technology in an open-water setting; 2) study the environmental effects of the technology; and 3) support the market development of environmentally sustainable technologies that harness wave energy to generate electricity. The development and deployment of renewable energy technologies such as those that capture energy from ocean waves is a stated policy of the State of Oregon. NNMREC has submitted a Joint Permit Application to the U.S. Corps of Engineers for authorization of the proposed project under Nationwide Permit #5 (Scientific Measurement Devices) and to the Oregon Department of State Lands for a Removal-Fill Permit.

NNMREC requests that the Department of Land Conservation and Development review the proposed project and provide concurrence that the project is consistent with the Oregon Coastal Management Program and applicable coastal policies. A Statement of Consistency is enclosed with this letter, and additional project information is included in the Joint Permit Application.

Please feel free to contact me at (541) 737-9492 or via email at belinda.batten@oregonstate.edu if you have any questions or would like additional information.

Sincerely,

[redacted]

Belinda Batten
Director
Northwest National Marine Renewable Energy Center
Oregon State University

Northwest National Marine Renewable Energy Center Wave Energy Test Project
Statement of Consistency with Oregon's Territorial Sea Plan

Project Overview

The purpose of the proposed project is to collect environmental, technical, and energy resource information to support responsible development of wave energy technologies. The project would be located within a 1-square-nautical-mile area (project site) in the Pacific Ocean, approximately two miles off the coast of Oregon near the city of Newport. Primary project components include a nominal, ½ scale WET-NZ wave energy conversion device, an Ocean Sentinel Instrumentation Buoy, a Power and Communications Cable, a TRIAXYS Wave Measurement Buoy, and associated mooring systems. The proposed project will not be connected to the electric grid.

The first deployment is planned for the summer of 2012, for a period of approximately three months between June 1 and September 30, 2012. Upon conclusion of testing at the end of the summer, the WET-NZ and Ocean Sentinel devices would be removed; the mooring systems will remain in place so that the devices could be deployed for a second test period in the summer of 2013. Upon conclusion of testing in the summer of 2013, the devices will be removed. All project components, including the mooring systems, will be removed by the end of the Nationwide Permit authorization period.

Oregon Coastal Management Program (OCMP) Enforceable Policies

The project site is located within the Territorial Sea of the State of Oregon and is therefore subject to review for consistency with Statewide Planning Goal 19 (Ocean Resources) and Oregon's Territorial Sea Plan (TSP). The project site was identified through a comprehensive a site selection process that involved environmental studies and consultation with stakeholders and other interested parties. This site was posted in the Newport Times on April 26, 2011, and the Oregonian on April 20, 2011, for final consideration by the public. After a 30-day period no objections were voiced.

The site location was then registered with the Oregon Department of Land Conservation and Development for inclusion in the TSP. Pursuant to Part Five of the TSP, "An application for a permit, license, or other authorization for the installation and use of the Northwest National Marine Renewable Energy Center mobile test berth site is not subject to the requirements of sections B or C, above." Therefore, a resource inventory and evaluation is not required for this consistency determination. Because the project site was selected in coordination with stakeholders and the purpose is to better understand the ecological, economic and social impacts and benefits of wave energy, the proposed project is consistent with Part Five of the Territorial Sea Plan and Goal 19.

Potential Effects

Given the relatively small spatial and temporal scale of the proposed project, any effects would be minor and temporary. Standard, removable mooring systems will be utilized, so the proposed project would only have minimal, temporary impacts on the benthic environment associated with the deployment and removal of anchors. The Joint Permit Application submitted for the proposed project is accompanied by environmental documentation prepared for the proposed project, including a Biological Assessment. The analysis and information in these documents demonstrate that the proposed project is not

expected to have any significant environmental impacts which would prove harmful to the ocean ecosystem or nearshore environment. Further, NNMREC has developed monitoring and adaptive management plans for the proposed project to ensure there are no adverse environmental effects.

The Oregon Department of Environmental Quality (DEQ) has issued Water Quality Certification (WQC) under Section 401 of the Clean Water Act for activities authorized under Nationwide Permit 5, subject to the specific water quality conditions and criteria provided by DEQ. DEQ representatives have verified that if the proposed project is authorized under Nationwide Permit 5, then it qualifies for 401 Water Quality Certification by complying with the conditions and criteria provided by DEQ. The Applicant agrees to comply with any conditions provided by DEQ and acknowledges that the District Engineer, State or Tribe may require additional water quality management measures for the Project.

The proposed project will comply with applicable navigational regulations for marking, lighting, and informing mariners of the location of in-water and on-water system components. Marker buoys will be placed at the project site when the WET-NZ device and instrumentation buoy are removed taken to Newport between deployments. In addition, the project components will be outfitted with automatic identification system transmitters that can provide navigation assistance for locating the devices in the unlikely event they break free from the mooring system. Project deployment, maintenance and removal activities will be timed so as not to interfere with or create a hazard to recreational or commercial navigation or fishing, and all in-water work shall be conducted during the listed in-water work window, as applicable. As such, the proposed project will only have a minimal, temporary impact on navigation.

An initial evaluation of the project area indicates to the best of our knowledge, the described activity is not located on property registered or eligible for registration in the latest published version of the National Register of Historic Places. At this time the applicant is unaware of any cultural resource surveys of the project area. As part of the Nationwide Permit review process, the Corps will provide notice of the proposed project to the State Historic Preservation Office (SHPO), interested Native American Indian Tribes, and other interested parties to confirm that no cultural resources are located in or would be affected by the proposed project. If any historic and/or archaeological resources and/or artifacts are encountered during construction, all construction activity will immediately cease, and the State Historic Preservation Office will be contacted.

Certification

In accordance with the requirements of the Coastal Zone Management Program, NNMREC hereby certifies that the proposed project complies with and will be conducted in a manner that is consistent with the Oregon Coastal Management Program.

X [redacted]

1: Project Purpose and Description

Purpose and Need

The development and deployment of renewable energy technologies such as those that capture energy from ocean waves is a stated policy of the State of Oregon. Full-scale open ocean testing facilities for wave applications are necessary to evaluate the technology, optimize energy extraction, and research environmental impacts. However, there currently is no open-ocean facility in United States waters where these devices can be tested off the electrical grid. Testing facilities connected to the electrical grid are more costly to develop and take longer to construct, and the installation and operation of a power cable required for a grid-connected facility will constitute a mechanism for potential impacts otherwise absent in a non-grid-connected facility. Therefore, a facility independent from the electrical grid will simplify and expedite ocean-based energy development and minimize environmental impacts that will be anticipated with a grid-connected system.

Project Description

The proposed project involves short-term testing of a scaled wave energy converter to collect environmental, technical, and energy resource information to support responsible development of wave energy technologies. Primary project components include the Ocean Sentinel Instrumentation Buoy, ½ scale WET-NZ wave energy converter, power and communications cable, TriAXYS wave measurement buoy, and associated mooring systems. The proposed project will not be connected to the electric grid; power generated by the WET-NZ device will be transported through the power and communications cable to the Ocean Sentinel to be dissipated in resistors.

The testing will take place during two short-term deployments, the first of which is planned for July – September 2012. Upon conclusion of testing in September 2012, the devices will be removed and taken to a land-based storage facility for the winter. The Ocean Sentinel mooring system will remain in place until June 2013, at which time the devices will be re-deployed for a second round of testing. The WET-NZ mooring system may also remain in place between the summer tests. Upon conclusion of testing in the summer of 2013, all project components, including the devices and mooring systems, will be removed. All structures associated with the proposed project will be removed within 30 days of the end of the Nationwide Permit authorization period.

Water depth at the project site is approximately 150 ft. The maximum footprint of the Ocean Sentinel and TriAXYS Wave Monitoring buoy and their mooring systems is 800 ft. x 625 ft. (equivalent 500,000 ft^2 or 11.48 acres). The WET-NZ device will be moored approximately 328 ft from the Ocean Sentinel instrumentation buoy, and the footprint of the WET-NZ and its mooring system is 696 ft x 696 ft (equivalent to 379,966.037 ft^2 or 8.72 acres). Collectively, the project components will have a footprint of approximately 820.21 ft x 1148.30 ft within the 1 nm^2 project site. Total impact area will be approximately 21.62 acres (See Plan View Assembly in Attachment 2). The coordinates marking the overall project area and deployment site are below:

Description	Latitude	Longitude
Northwest Overall Corner	N44.6978	W124.1462
Northeast Overall Corner	N44.6985	W124.1228
Southeast Overall Corner	N44.6819	W124.1218
Southwest Overall Corner	N44.6811	W124.1451
Northwest Site Corner	N44.6965	W124.1298
Northeast Site Corner	N44.6948	W124.1277
Southeast Site Corner	N44.6944	W124.1251
Southwest Site Corner	N44.6943	W124.1296

** Lambert Conformal Conic NAD83*

The Ocean Sentinel is a customized instrumentation buoy that will monitor and record WET-NZ performance and environmental data. It has an aluminum hull with steel/aluminum/composite instruments (see Attachment 2: Project Drawings and Figures). The Ocean Sentinel is also outfitted with radio antennae, data acquisition systems (DAS), telemetry systems, monitoring devices (seabird detection, atmospheric monitors, cameras, etc.), and power systems (solar panels, diesel generator).

Ocean Sentinel Instrumentation Buoy

Dimensions *(L x W x H in linear feet)*	21.25 ft x 10.5 ft x 24 ft
Height Above the Mean High Water Line	15 ft (to antenna locations above water surface)
Mass	19,600 lb (including fuel and equipment)
Displacement Volume (%)	50%

The WET-NZ is a point-absorber wave energy conversion device that maximizes engineering efficiency through the novel use of direct-drive and adaptive response to changes in wave motion. The majority of the device is submerged but floating, as it is designed to harness both kinetic and potential energy from passing waves. The device to be deployed at the project site is nominally half-scale, with a rated output of 20kW (see Attachment 2).

WET-NZ Wave Energy Converter

Dimensions *(L x W x H in linear feet)*	13.8 ft x 10.7 ft x 61.6 ft
Height Above the Mean High Water Line	15 ft
Mass	wet mass of hull: 110,231 lb (50 tons) wet mass of float: 8,818 lb (4 tons)
Displacement Volume (%)	Hull: 95% Float: 50%

The TriAXYS wave measurement buoy will be deployed to measure and record the size and strength of the waves; constructed of stainless steel and polycarbonate, it is approximately 3 ft in diameter and approximately 150 lb. Wave data recorded by the TriAXYS Wave Measurement Buoy will be transmitted via wireless telemetry to the instrumentation buoy or directly to shore.

TriAXYS Wave Measurement Buoy

Dimensions	3 ft diameter by 3 ft high
Height Above the Mean High Water Line	1.5 ft
Mass	440 lb, including batteries
Displacement Volume (%)	440 lb (50%)

A Power and Communications Cable consisting of a copper conductor, steel armor, and polyethylene insulation will connect the Ocean Sentinel and the WET-NZ device; power generated by the WET-NZ device will be transmitted through the power and communications cable to the Ocean Sentinel to be dissipated in a load bank on board the instrumentation buoy. Switch gear and power conversion equipment located on-board the instrumentation buoy will provide control of the load bank. The electrical loading and power configuration is described in the technical paper, "A Novel Ocean Sentinel Instrumentation Buoy for Wave Energy Testing" (Attachment 7). The proposed project will utilize one of the electrical loading and power conversion configurations described in Section F of the technical report, with the exception of the active converter described in the last paragraph.

Power and Communications Cable

Dimensions	656 ft x 1.6 ft diameter
Mass	Weight in air: 1,631 lb Weight in sea water: 1,058 lb
Displacement Volume (%)	100%

Anchors and Mooring Systems

The Ocean Sentinel, the WET-NZ device and the TriAXYS Wave Monitoring Buoy will each have its own mooring system, as described below. Collectively, a total of three mooring buoys, three subsurface floats, six mooring lines, three anchor lines, six anchor chains and ten anchors will be installed for the proposed project.

The Ocean Sentinel Instrumentation Buoy will utilize a three point mooring system that consists of three concrete block anchors positioned at points 120 degrees apart around a center position with a radius of approximately 328 ft. The Ocean Sentinel will be tethered with polyester ropes to three surface mooring buoys, each of which has a total buoyancy of approximately 3000 lb. The mooring buoys will

be attached with 1 in stud link chain to their respective anchors on the seabed. The anchors will be constructed of concrete according to International Association of Lighthouse Authorities (IALA) standards; they will be constructed at least 28 days prior to deployment and will be cured to full strength (to prevent leaching). Attached to each anchor will be 2 shots (90 ft each) of 1 in stud link chain, each of which will run to its corresponding mooring buoys and be attached to the padeye on the mooring buoy.

From the upper pad of the mooring buoys a 328 ft length of 1.5 in diameter Samson RP-12 will connect to the Ocean Sentinel Buoy. The Samson RP-12 is a polyester rope with a minimum breaking strength of 58,000 lb; it has a specific gravity of 1.38 (sinking line). At both ends, these lengths of rope will have a short pendant section with a shackle assembly which will enable them to be easily attached or detached from the mooring buoys and the Ocean Sentinel, at sea, in the case of deployment or towing, respectively. Two of the mooring lines will attach to the aft sides of the Ocean Sentinel, while the third mooring line will attach to the mooring yoke of the Ocean Sentinel Keel. (See Figure 5: Ocean Sentinel Mooring Profile and Figure 6: Ocean Sentinel Mooring Plan View, provided in Attachment 2.)

Ocean Sentinel Mooring Schematics

Component	# Units	Description	Dimensions
Anchors	3	Concrete block	5 ft x 5 ft x 4 ft
Anchor lines	3	1 inch stud-link	90 ft x 0.083 ft diameter
Mooring lines	3	Samson RP-12 polyester rope	328 ft x 0.125 ft diameter
Mooring Buoys	3	Steel	58 in diameter

The WET-NZ device will have a three-point mooring system that utilizes a combination of drag anchors. Drag anchors are common in the industry, having broad use experience and reliable holding capacity. In addition, very large size and capacity drag anchors are available for use in sand bottom types like the project site. A drag anchor is similar to an inverted “kite” that is placed on the seafloor and dragged laterally until the anchor fluke trips and then penetrates the seafloor to a depth that depends upon load, anchor weight, anchor configuration and seafloor properties. In addition to their ease of installation and removal, mooring line connections on drag anchors are easy to inspect and service.

In the three point mooring system designed for the WET-NZ, each mooring leg will consist of an embedment anchor, a clump anchor, a subsurface float, and wire and synthetic mooring lines. A multi-leg mooring spread using drag anchors alone requires a large footprint on the seafloor, but the use of clump weights with the drag anchors allows for a shorter line scope and, therefore, a smaller impact area on the seabed. In the WET-NZ mooring system, 12,000 lb EELLS drag anchors will function as the primary mooring points. Each drag anchor will be secured to an 8000 lb Navy Stockless anchor functioning as a clump weight (see WET-NZ Mooring Plan in Attachment 2). The EELS drag anchors and Navy Stockless anchors will be connected by a steel wire rope between 164 ft and 246 ft long (final

lengths will be determined by exact water depth at time of deployment). The maximum footprint of the WET-NZ mooring system is 696 ft x 696 ft (equivalent to 379,966.037 ft^2 or 8.72 acres).

WET-NZ Mooring Schematics

Component	# Units	Description	Approximate Dimensions
Drag Anchor	3	EELLS (12,000 lb)	11.9 ft x 7 ft x 3.7 ft
Clump Weight	3	Navy Stockless (8,000 lb)	7.2 ft x 5.5 ft x 3.4 ft
Anchor line	3	Steel Wire Rope	246 ft length x 1.5 in diameter
Mooring line	3	Steel Wire Rope	164 ft length x 1.5 in diameter
Subsurface float	3	Urethane Foam	5.6 ft height x 67.2 in diameter

The mooring line for the TriAXYS Buoy is a 49.21 ft rubber bungee cord that attaches directly underneath the buoy to allow compliant wave following. The bungee cord terminates to a synthetic Amsteel rope extending to the anchor system. The TriAXYS anchor will be a heavy steel chain with an approximate in water weight of 800 lb (see TriAXYS Mooring Profile in Attachment 2).

Chain Anchor for TriAXYS Wave Measurement Buoy

Anchor Dimensions	2 ft^2 (chain clump)
Anchor Mass	800 lb
Displacement	1.8 ft^3

Construction Methods

No on-site construction activities are associated with this project. All project components will be constructed at land-based facilities prior to being installed at the project site. Hatfield Marine Science Center (HMSC) in Newport, OR, will serve as the mobilization site. The Ocean Sentinel, WET-NZ, and TRI-AXYS buoys, as well as all mooring materials, will be staged at this site for the installation vessels to pick up and transport to the project site. Prior to deployment, pier-side tests may be performed to check the operation and integration of all instrumentation buoy and WET-NZ device systems to verify the readiness of systems for mooring, connection, power dissipation, and shore communications.

Deployment and Installation

Please see Attachment 3: Installation and Removal, and Decommissioning for further details.

Site Access and Control

Site access during the construction process will be managed by controlling the proximity of non-construction related vessels to the deployment site. Site control will be maintained through the Temporary Use Permit, a navigation safety buffer, and United States Coast Guard Private Aids to Navigation (PATON) authorizations. The proposed project will comply with applicable navigational regulations for marking, lighting, and informing boaters of the location of in-water and on-water system components, and U.S. Coast Guard-approved lighting will be mounted atop the Ocean Sentinel and WET-NZ devices (see Attachment 5: Navigational Lighting Plan).

Two weeks prior to deployment, installation, and removal of the instrumentation buoy and WET-NZ device, NNMREC will request that the U.S. Coast Guard publish a Local Notice to Mariners describing the Proposed Project and potential navigation exclusion zone or area to be avoided. The automatic identification system transmitters will provide navigation assistance for locating the devices in the unlikely event they break free from the mooring system. Marker buoys will be placed at the project site when the WET-NZ and/or Ocean Sentinel instrumentation buoy has been removed (e.g., brought to Newport for maintenance or between deployments).

Operations and Maintenance

Operations and maintenance activities for the proposed project are described in Attachment 4.

Removal and Decommissioning

Installation, Removal and Decommissioning activities are described in Attachment 3.

Federally Protected Endangered, and Threatened Species

Federally listed species and critical habitat which may occur in the project action area are described in Table 1-1 of the enclosed biological assessment (BA), which is provided as a reference as it includes information about existing environmental conditions at the project site, as well as potential effects on species listed or proposed for listing as threatened and endangered and their critical habitat (see Attachment 11). It also evaluates the potential effects of the proposed project on Essential Fish Habitat and establishes project compliance with the Marine Mammal Protection Act. The BA is presently being revised per input from resources agencies for the purposes of the Endangered Species Act Section 7 consultation for the proposed project. A comprehensive list of all state and federal listed species in the State of Oregon is also provided for reference information (Attachment 10).

2: Project Drawings and Figures

The following figures and drawings are enclosed, in the order listed below:

Ocean Sentinel Instrumentation Buoy

WET-NZ Wave Energy Converter

TriAxys Wave Measurement Buoy

Site Map

Bathymetric Map

Backscatter Map

Plan View Assembly

Ocean Sentinel Mooring Plan

WET-NZ Mooring Plan

Project Fill Summary

2 System Specifications Overview

The key dimensions for the NOMAD Buoy are as follows:

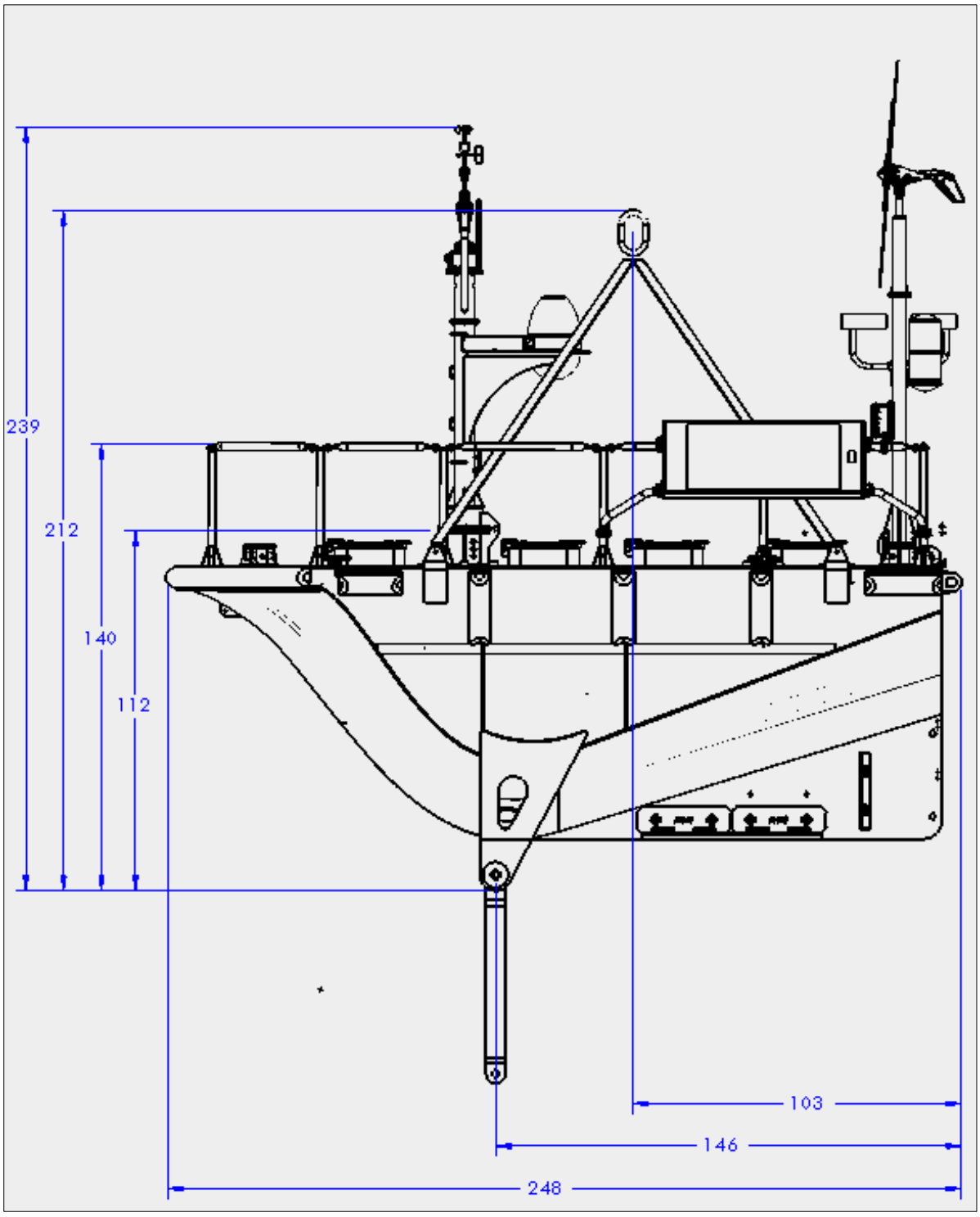

(measurements in inches)

Figure 1

Item	Specification
Physical Description	
Length	6.30m (248 inches)
Width	3.1m (122 inches)
Height to Deck Hatch (from Yoke Pivot)	2.85m (112 inches)
Bare Hull Weight- BHW (with no batteries, fuel or payload)	6818 kg (15,000 lb) (includes 1,000 #/454kgs ballast)
BHW + 40 batteries	8090 kg (17,800 lb)
BHW + 40 batteries + full payload	8773 kg (19,300 lb)
BHW + 40 batteries + full payload + 240 gallons fuel	9,910 kg (21,800 lb)
Obstruction Light	Amber LED source. Programmable flash sequence. Three miles visibility. GP Fl 5 (20)
Purge Port Plugs x 4	¾" 16 UNF torqued to 20 N-m (14.5 ft-lbs)
TORQUE Specification: Hatch Retaining Bolts	**18-22 N-m (13-16 ft-lbs) Tightened in a star pattern, first to the lower #, then to the higher #.**
Materials	
Hull	5086 Aluminum (4x compartments)
Superstructure	6061 Aluminum
Mooring Bridle	316 Stainless Steel (Isolated)
Anodes	10kg Zinc (4x mooring yoke; 2x Hull)
Power System	
Operational system voltage(s)	12 & 24 VDC; 110 VAC
Batteries	40 - GNB SunLyte 5000X 12 volt,100 AmpHr/ battery in 4 x 100 AmpHr Banks of 24 VDC into a common BUS Termination
Solar Panels	2 @ 210 watt with 20 Amp Breaker; with 15 Amp Solar Charge Controller
Wind Turbine(s)	24 VDC output- 1 @1,000 watt- with 125 Amp Breaker; 1 @ 400 watt- 20 Amp Breaker
Diesel Generator	24 VDC @ 11 KW with 150 Amp Breaker; fuel consumption 1 litre/hour at 2100 rpm
Power Control System	Sunsaver- MPPT

Table 1

OCEAN SENTINEL

ITEM NO.	PART NUMBER	DESCRIPTION	WEIGHT [kg]	QTY.
1	WED0020-001-00	Hull, OCEL DR-090705-201R1 + -202R1 + -203R1	19894	1
2	WED0020-005-00	Buoyancy Pipe, OCEL DR-090705-204R1	112	4
3	ECCF00001_WED0020-005	Expandable Closed Cell Foam, ERA2532	54.889	4
4	FSTR0201850G			4
5	WED0020-006-00	Square Washer, OCEL DR-090705-204R1	3.154	8
6	FSNF020G	Full Nut 20dia, hot dipped galvanized	0.314	8
7	FSNH020G	Full Nut 20dia, hot dipped galvanized	0.144	8
8	WED0020-007-00			1
9	WED0020-008-00	Ballast Plate, Type 4, OCEL DR-090705-203R1	3882.684	1
10	WED0020-009-00	Ballast Plate, Type 5, OCEL DR-090705-203R1	1959.304	2
11	M33x170 Hex Bolt Galv	M33x170 Hex Bolt, Gr8.8, Galvanized	1.497	4
12	M33 Nut Galv	M33 Nut, Gr.8, Galvanized	0.297	4
13	FSTR0320600G	Tierod 32dia x 600mm long, hot dipped galvanized	3.764	4
14	FSNF032G	Full Nut 20dia, hot dipped galvanized	1.158	8
15	FSNH032G	Full Nut 20dia, hot dipped galvanized	0.549	8
16	WED0020A-100-01	Wave Energy Devise 20kW, Power Pod Assembly, Circular Float	9020	1
17	24mm Washer Gr8 Galv	24mm Washer, Gr.8, Galvanized	0.034	2
18	M24 x 90 Gr 8.8	ISO M24 x 90 bolt, 316 Stainless Steel	0.499	1
19	M24 Nut Gr8 Galv	M24 Hex Nut, 316 S/S	0.126	1
20	WED0020-200-01	Wave Energy Devise 20kW, Hydraulic Assembly	16	1
21	WED0020-002-00	Clevis Bearing, 100OD / 80ID x 100mm	0.258	2
22	WED0020-003-00	Split Crank Bearing, 100OD / 80ID x 100mm	0.253	2
23	WED0020-004-01	Axle Pin, OCEL DR-090705-223RB	17	2
24	ISO 4017 - M12 x 170-N	Hexagon Head Bolt M12x170 - ISO4017	0.170	6
25	torque nut 08_iso			6
26	WED0020-400-01	Wave Energy Device 20kW, Electrical Assembly	257	1
27	WED0020-700-00	DoE Master Wiring Diagrams	0.000	1
28	WED0020-010-00	Locking Pin, OCEL DR-090705-203R1	21.618	2

WET-NZ Profile and Specs

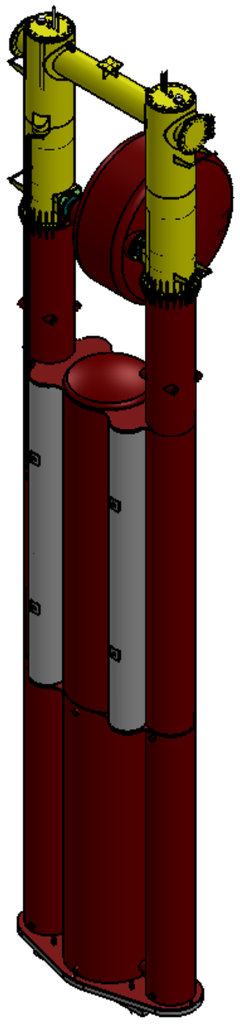

INDUSTRIAL RESEARCH LIMITED

Modifications.

General Tolerance
if not specified
2 dec places +/- 0.05
1 dec place +/- 0.05
0 dec places +/- 0.20

THIS DRAWING AND THE INFORMATION IT CONTAINS REMAIN THE PROPERTY OF INDUSTRIAL RESEARCH Ltd. THE DRAWING AND INFORMATION ARE NOT TO BE COPIED BY ANY MEANS UNLESS PRIOR WRITTEN PERMISSION HAS BEEN OBTAINED FROM INDUSTRIAL RESEARCH Ltd. (C)

STANDARD NOTES
1. All dimensions in mm unless other-wise shown.
2. Material- AluminiumMaterial <not specified>
3. Surface Finish-
4. Surface Protection -
5. Surface area-
6. Mass-

ORIGINAL SIZE	A3
Date	16Dec09
Scale	N.T.S
Drawn	N. Emery
Checked	

I.R.L JOB NUMBER
FILE NAME WED0020A-000-01

REVISION CODE A

SHEET 1 OF 2

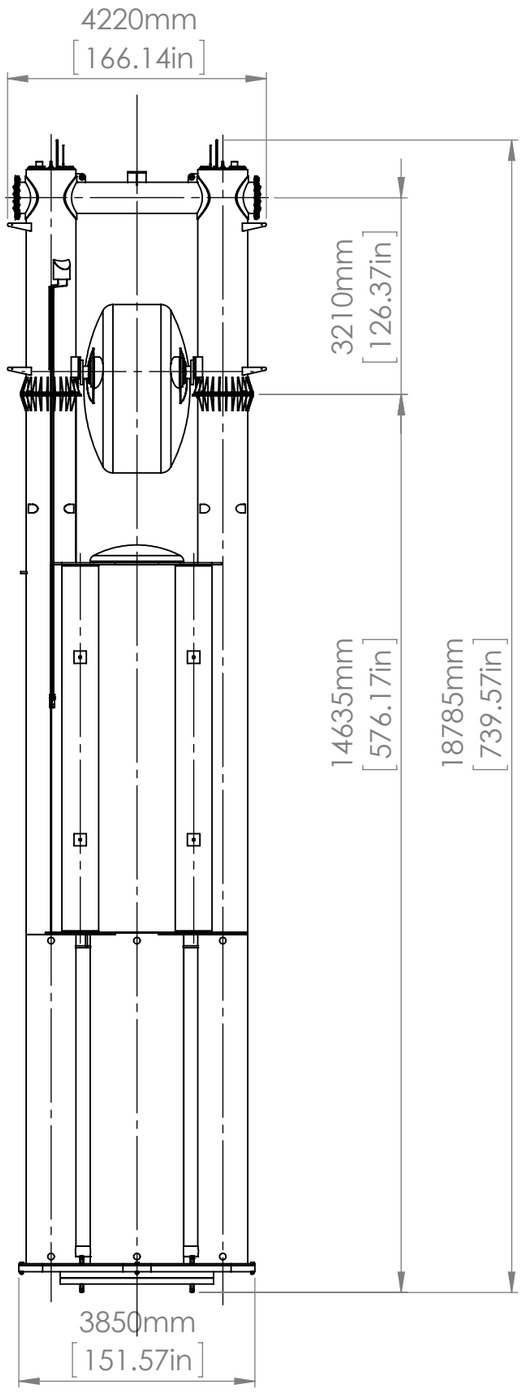

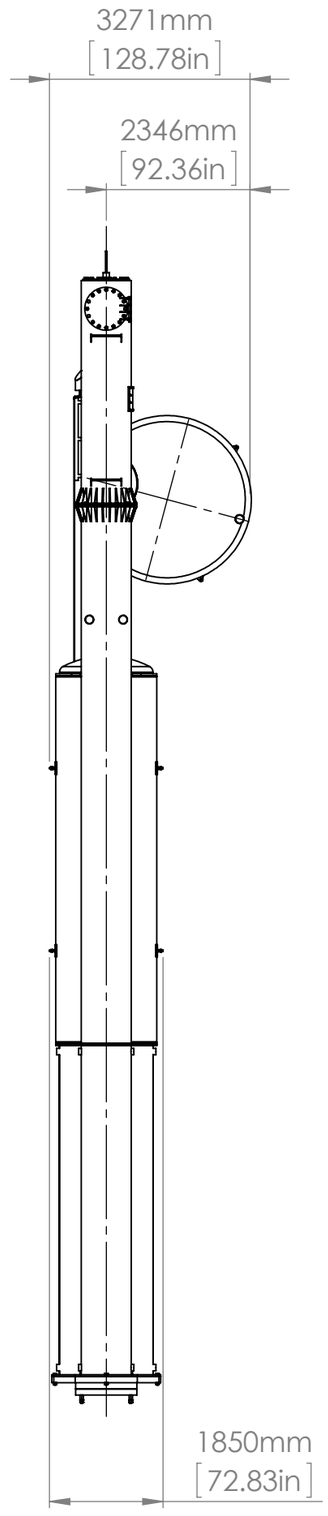

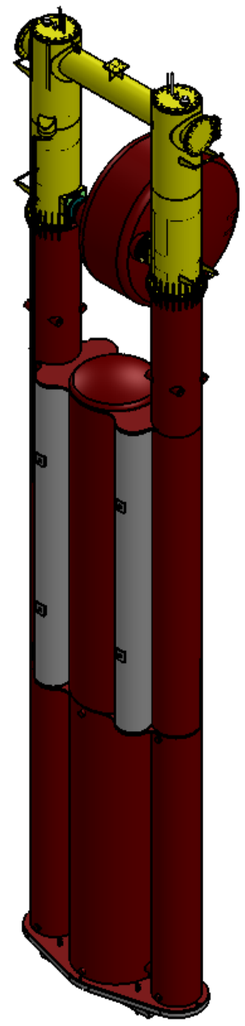

INDUSTRIALRESEARCH LIMITED
Te Tauihu Pūtaiao

01	Modifications.

General Tolerance
if not specified
2 dec places +/- 0.05
1 dec place +/- 0.05
0 dec places +/- 0.20

THIS DRAWING AND THE INFORMATION IT CONTAINS REMAIN THE PROPERTY OF INDUSTRIAL RESEARCH Ltd. THE DRAWING AND INFORMATION ARE NOT TO BE COPIED BY ANY MEANS UNLESS PRIOR WRITTEN PERMISSION HAS BEEN OBTAINED FROM INDUSTRIAL RESEARCH Ltd. (C)

STANDARD NOTES
1. All dimensions in mm unless other-wise shown.
2. Material-
3. Surface Finish-
4. Surface Protection -
5. Surface area-
6. Mass- 37923kg

ORIGINAL SIZE	A3
Date	9 Feb 2012
Scale	1:100
Drawn	P Heingartner
Checked	

I.R.L JOB NUMBER
FILE NAME WED0020A-000-01

Wave Energy Device 20kW, Assembly

REVISION CODE

SHEET 2 OF 2

FIGURE 6:Profile View of TRIAXYS Wave Measurement Buoy

REVISIONS			
REV.	DESCRIPTION	DATE D/M/Y	BY
00	Original	12/04/02	TE
01	Updated	17/04/09	TE
02	Updated	14/10/11	RKK

Max. depth 150m
Overall Mooring Scope: 1.4:1
Upper Mooring Scope: 1.8:1

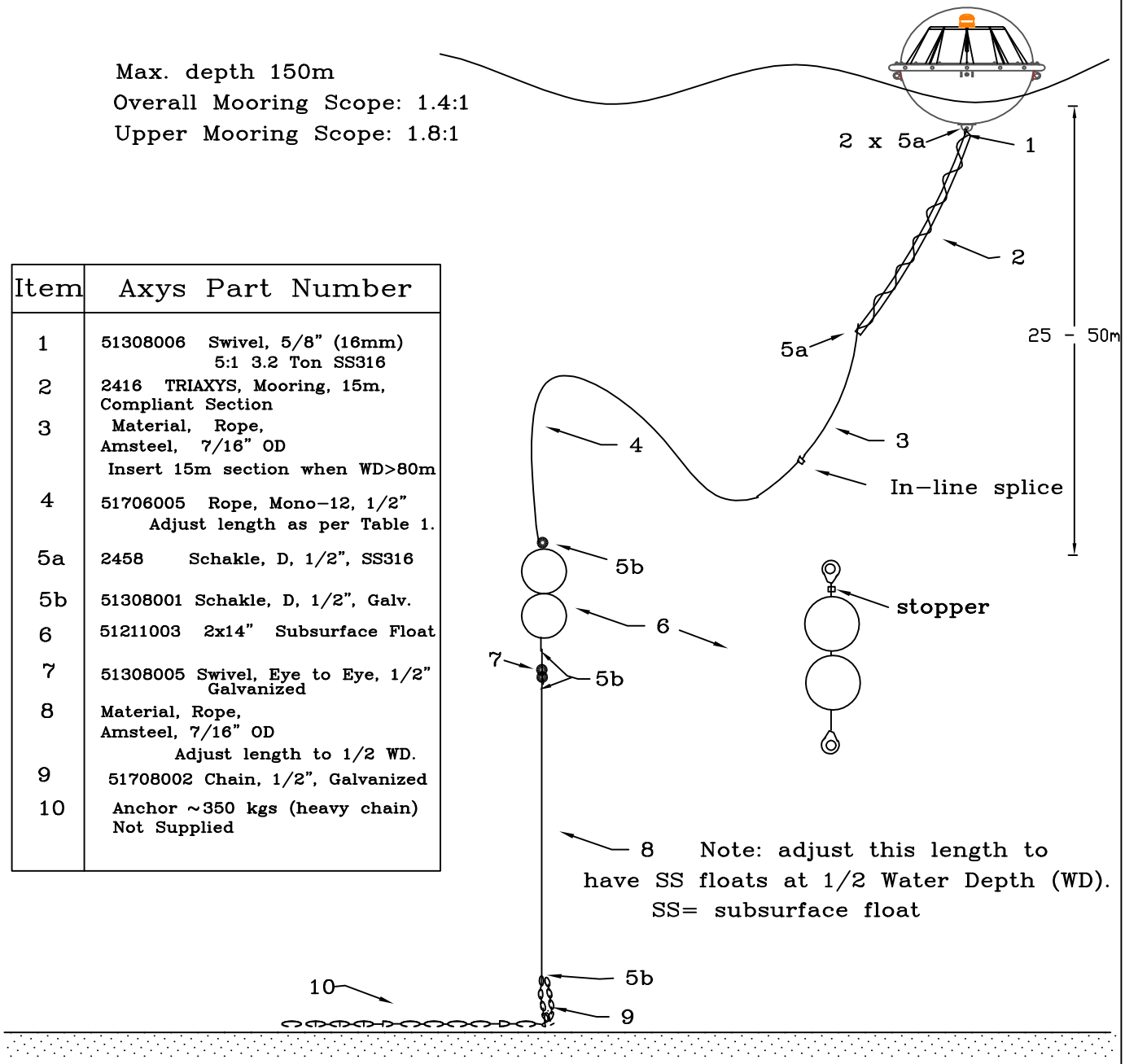

Item	Axys Part Number
1	51308006 Swivel, 5/8" (16mm) 5:1 3.2 Ton SS316
2	2416 TRIAXYS, Mooring, 15m, Compliant Section
3	Material, Rope, Amsteel, 7/16" OD Insert 15m section when WD>80m
4	51706005 Rope, Mono-12, 1/2" Adjust length as per Table 1.
5a	2458 Schakle, D, 1/2", SS316
5b	51308001 Schakle, D, 1/2", Galv.
6	51211003 2x14" Subsurface Float
7	51308005 Swivel, Eye to Eye, 1/2" Galvanized
8	Material, Rope, Amsteel, 7/16" OD Adjust length to 1/2 WD.
9	51708002 Chain, 1/2", Galvanized
10	Anchor ~350 kgs (heavy chain) Not Supplied

Table 1

WD	SSF-Amsteel Rope Item 8 Length	Mono Rope 12 Item 4 Length	Amsteel Add Item 3
20m	10m	10m	N/A
30m	15m	15m	N/A
40m	20m	20m	N/A
50m	25m	25m	N/A
75m	37.5m	37.5m	N/A
100m	50m	50m	25m
150m	75m	75m	45m

When printed, make sure you are using the most current revision of this document.

This document in its entirety contains proprietary information that shall not be disclosed to any third parties without obtaining prior permission from Axys Group Ltd. The bearer of this document shall take suitable precautions to prevent the disclosure of any information contained in this document to any parties that do not have the permission to receive that information.

DESIGNER	QA	TEMPLATE #
A. Ethier/R.Kashino	This drawing is controlled through Q-PULSE	QT-04-04-00.dwg

DIMENSIONS IN INCHES UNLESS OTHERWISE SPECIFIED.
LINEAR TOLERANCES ARE: X ±0.1 X.X ±0.03 X.XX ±0.01 X.XXX ±0.003
ANGULAR TOLERANCES ARE: X.X ±0.1 X.XX ±0.05
MATERIAL
FINISH
ACAD FILE ..\CONTROLLED DOCUMENTS\03157\0315702S.dwg

AXYS TECHNOLOGIES INC.
P.O.BOX 2219, 2045 MILLS RD.
SIDNEY, B.C., CANADA V8L 3S8
(250)655-5850 Fax:(250)655-5856

TRIAXYS, Mooring
20-150 m Deployment Depth

SCALE	DRAWN BY	DATE	ASSEMBLY DWG	SIZE	DRAWING NUMBER	REV
NTS	A. Ethier	16/01/01		A	03157	02

FIGURE 1: Location Map

NNMREC Wave Energy Test Berth Site Map

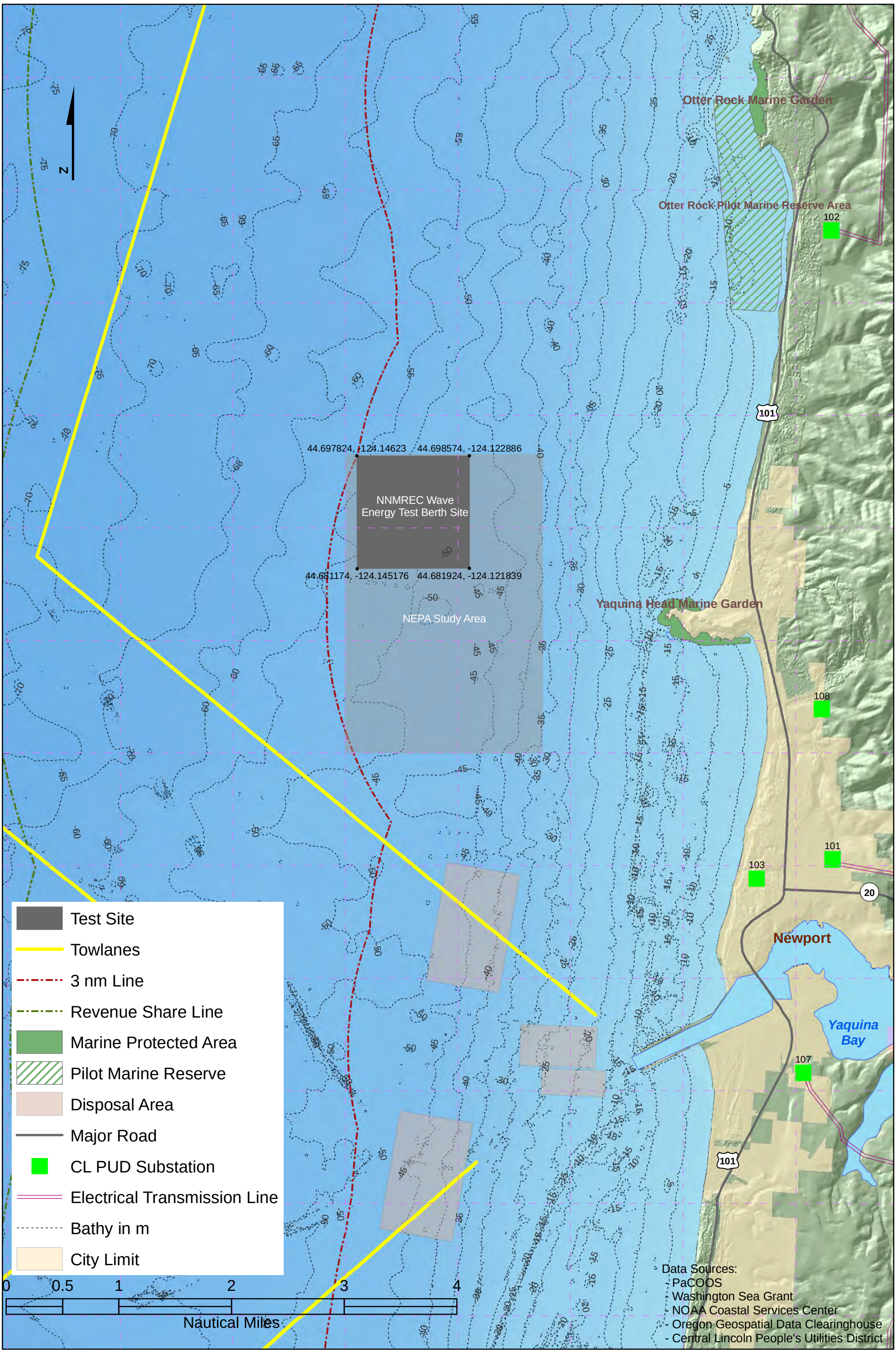

Not Intended for Nautical Use 1:56,000 Projection: Lambert Conformal Conic NAD83 OSU 2011

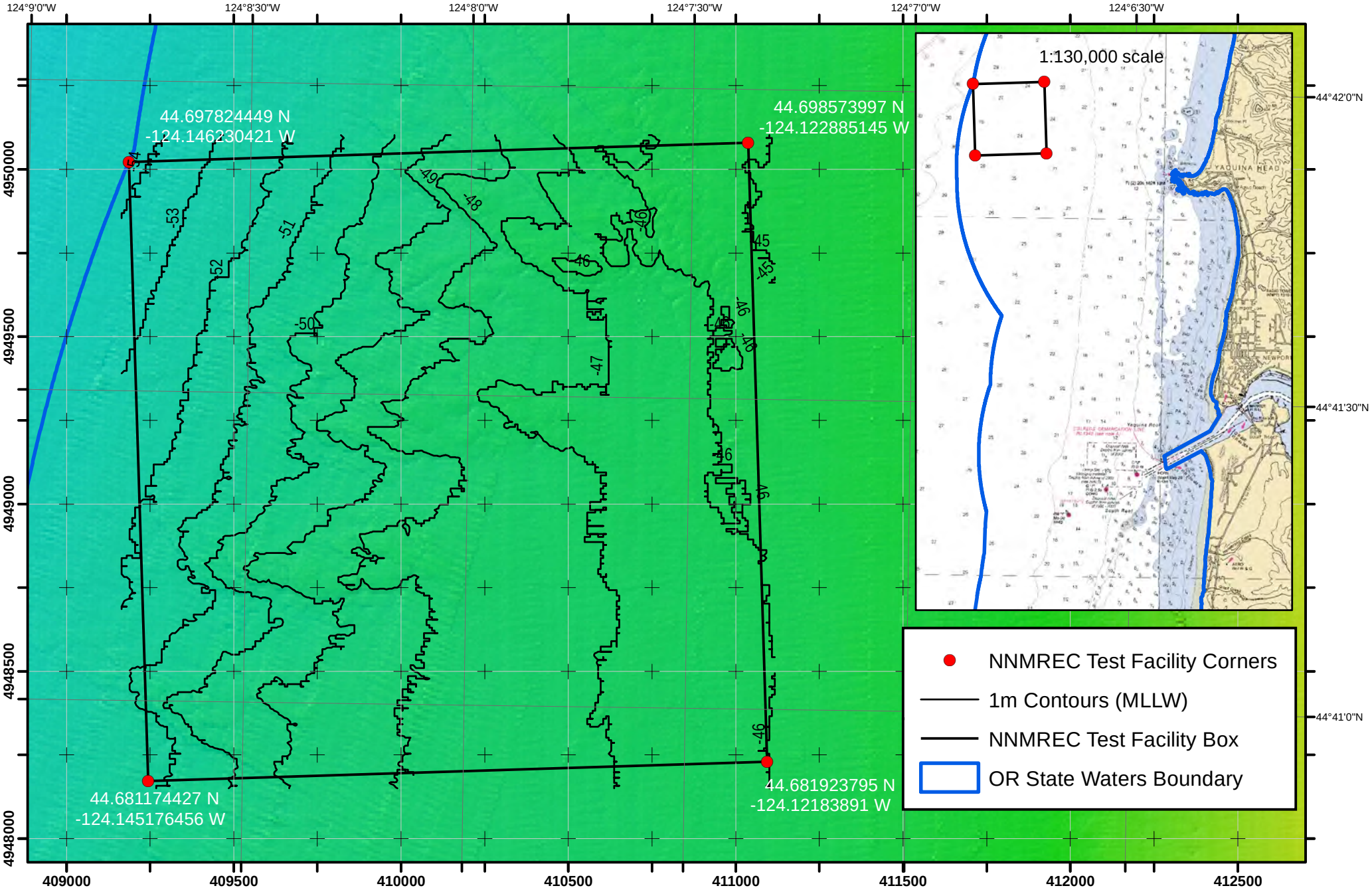

Meters

0 250 500 750 1,000

0 0.25 0.5

Nautical Miles

FIGURE 2:Bathymetric Map

NNMREC

Newport Ocean Energy Test Facility

N W E S

Map Projection:
UTM Zone 10N WGS 84
1:15,000 scale

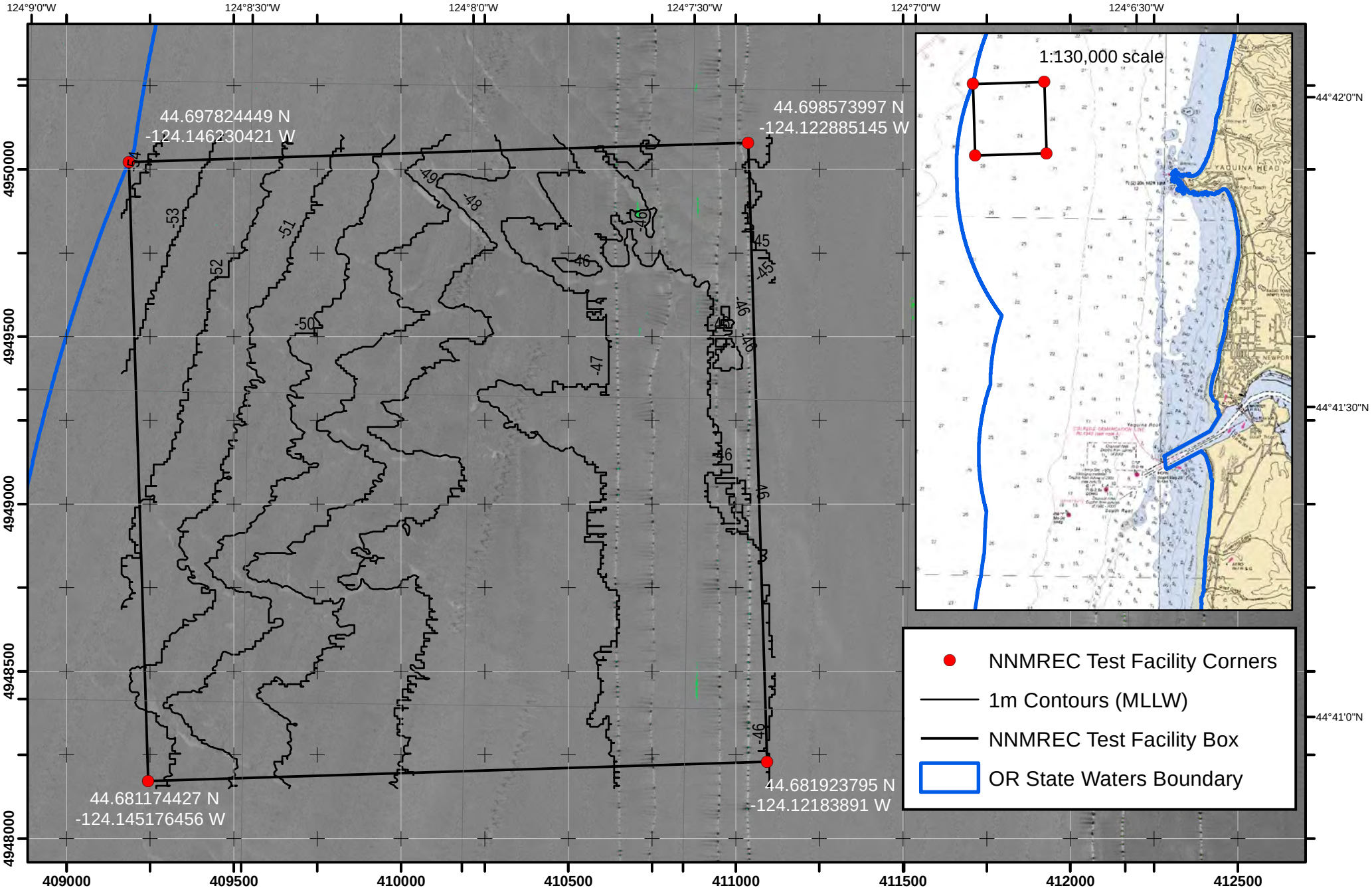

Meters
0 250 500 750 1,000
0 0.25 0.5
Nautical Miles

FIGURE 3: Backscatter Map
(Bottom Conditions)
NNMREC
Newport Ocean Energy Test Facility

N
W E
S

Map Projection:
UTM Zone 10N WGS 84
1:15,000 scale

PLAN VIEW ASSEMBLY

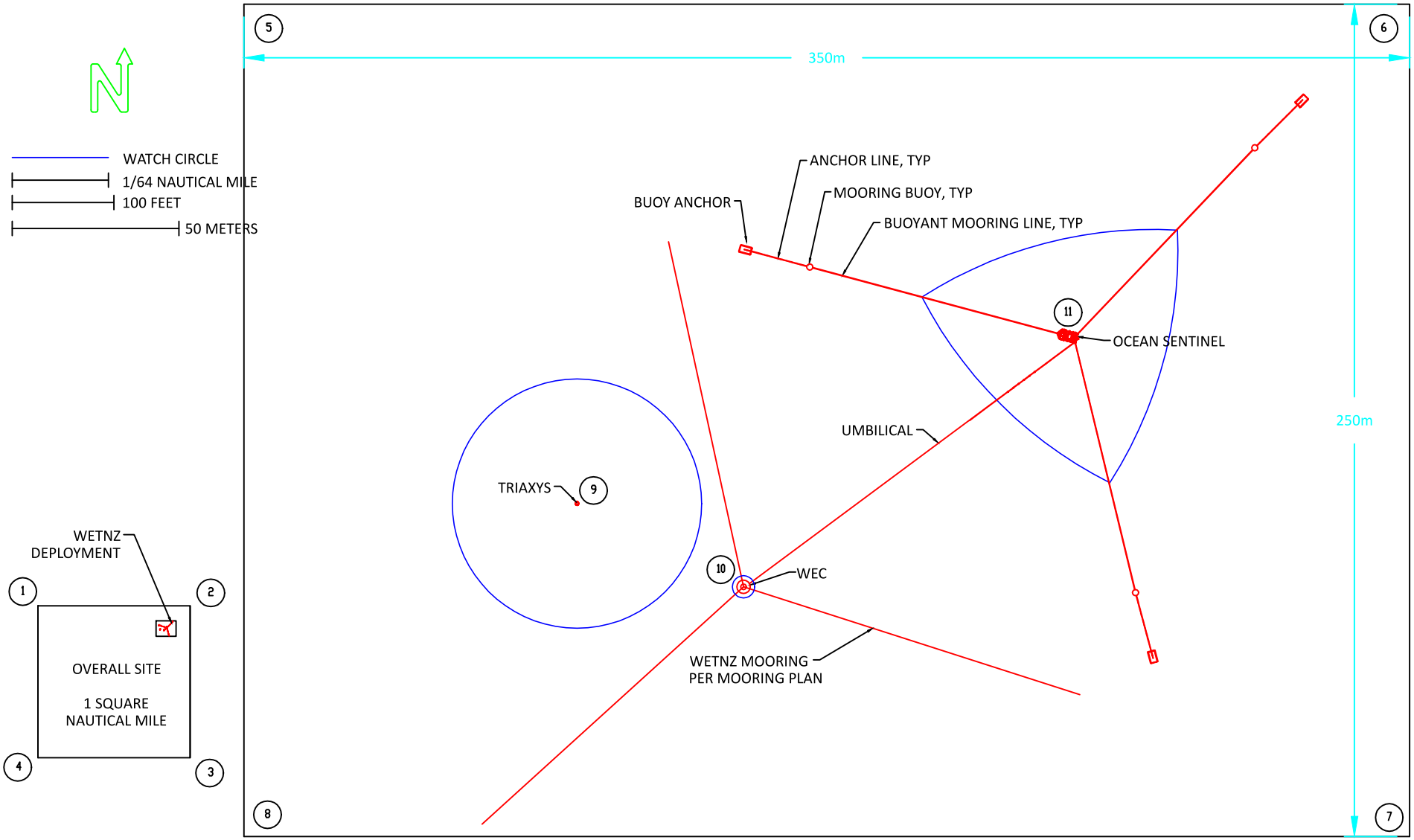

Point No.	Description	Latitude*	Longitude*
1	Northwest Overall Corner	N44.69782444900	W124.14623042100
2	Northeast Overall Corner	N44.69857399700	W124.12288614500
3	Southeast Overall Corner	N44.68192375900	W124.12183891000
4	Southwest Overall Corner	N44.68117442700	W124.14517645600
5	Northwest Site Corner	N44.69654918	W124.12980796
6	Northeast Site Corner	N44.69481186	W124.12777619
7	Southeast Site Corner	N44.69444426	W124.12518974
8	Southwest Site Corner	N44.69430052	W124.12966653
9	TriAXYS Buoy	N44.69524106	W124.12844402
10	WetNZ Device	N44.69503362	W124.12779014
11	Ocean Sentinel Buoy	N44.69573186	W124.12655239

* Lambert Conformal Conic NAD83

DESIGNER SEAN MORAN	QA REVIEWED BY STM	TEMPLATE # STANDARD
DIMENSIONS IN INCHES UNLESS OTHERWISE SPECIFIED. LINEAR TOLERANCES ARE: X ±0.1 X.X ±0.03 X.XX ±0.01 X.XXX ±0.003 ANGULAR TOLERANCES ARE: X.X ±0.1 X.XX ±0.05	NORTHWEST NATIONAL MARINE RENEWABLE ENERGY CENTER OREGON STATE UNIVERSITY	
MATERIAL	MOBILE OCEAN TEST BERTH WETNZ OVERALL MOORING PLAN	
FINISH	SCALE NTS / DRAWN BY STM	DATE 03/05/12
ACAD FILE ..\CONTROLLED DOCUMENTS\ OSU WETNZ MOORING	Sheet 1 of 1 / SIZE A	DRAWING NUMBER WETNZ1 / REV 00

REFERENCES	
ITEM	REFERENCE
1.	TYPE REFERENCE ITEM DESCRIPTION HERE

OCEAN SENTINEL MOORING PLAN

REVISIONS			
REV.	DESCRIPTION	DATE D/M/Y	BY
00	Original	15/01/12	RKK

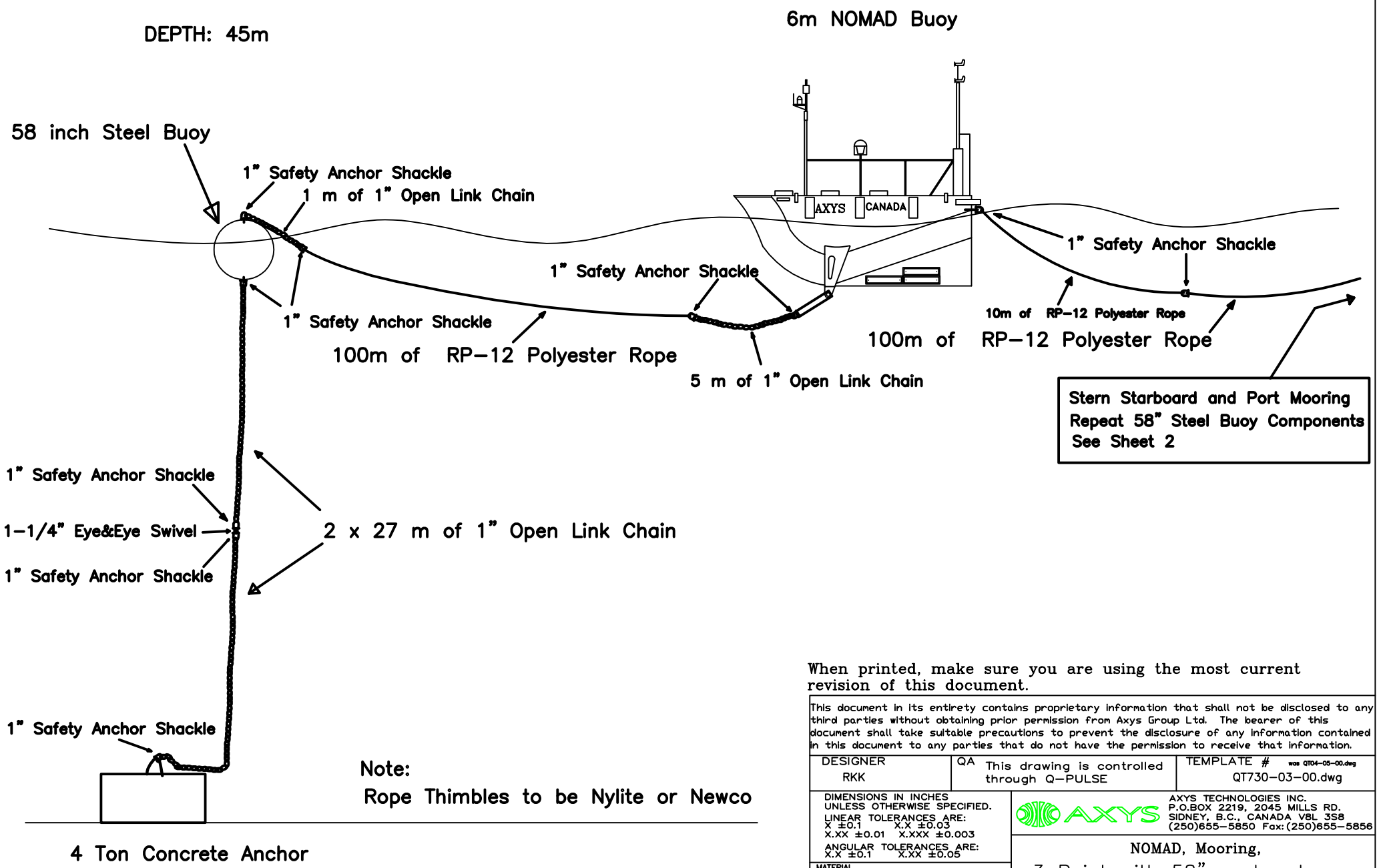

Note:
Rope Thimbles to be Nylite or Newco

When printed, make sure you are using the most current revision of this document.

This document in its entirety contains proprietary information that shall not be disclosed to any third parties without obtaining prior permission from Axys Group Ltd. The bearer of this document shall take suitable precautions to prevent the disclosure of any information contained in this document to any parties that do not have the permission to receive that information.

DESIGNER	QA	TEMPLATE #
RKK	This drawing is controlled through Q-PULSE	QT730-03-00.dwg (was QT04-05-00.dwg)

DIMENSIONS IN INCHES UNLESS OTHERWISE SPECIFIED.
LINEAR TOLERANCES ARE:
X ±0.1 X.X ±0.03
X.XX ±0.01 X.XXX ±0.003
ANGULAR TOLERANCES ARE:
X.X ±0.1 X.XX ±0.05

MATERIAL –

FINISH –

ACAD FILE ..\CONTROLLED DOCUMENTS\05328\0532800S.dwg

AXYS TECHNOLOGIES INC.
P.O.BOX 2219, 2045 MILLS RD.
SIDNEY, B.C., CANADA V8L 3S8
(250)655-5850 Fax:(250)655-5856

NOMAD, Mooring,
3 Point with 58" anchor buoys

SCALE	DRAWN BY	DATE
NTS	RKK	15/01/2012

SHEET	SIZE	DRAWING NUMBER	REV
1 of 2	A	05328	00

ITEM	PART No.	PART NAME	QTY
1" Safety Anchor Shackle		PARTS LIST	

Plan View
DEPTH: 45m

OCEAN SENTINEL MOORING PLAN VIEW

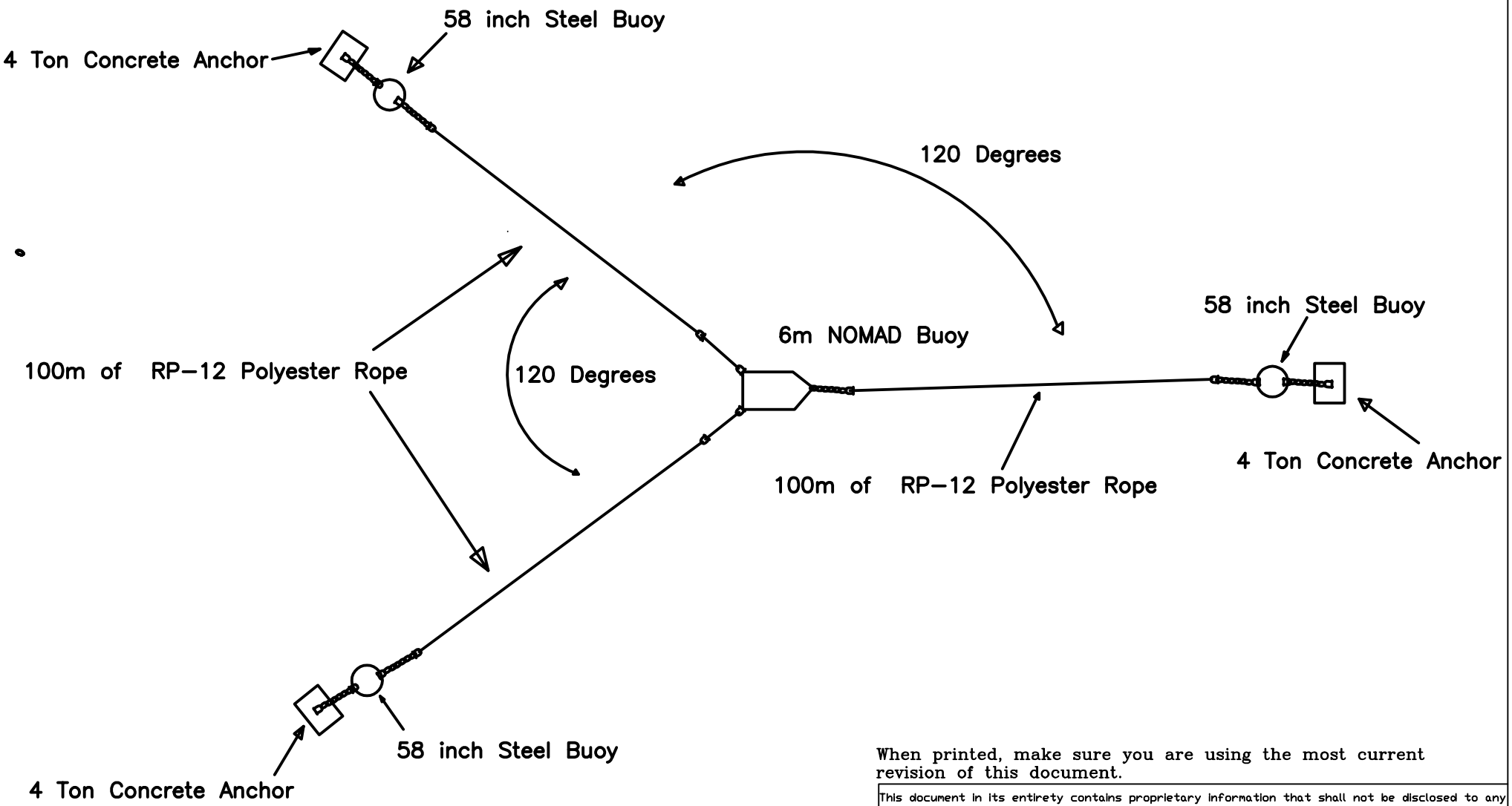

When printed, make sure you are using the most current revision of this document.

This document in its entirety contains proprietary information that shall not be disclosed to any third parties without obtaining prior permission from Axys Group Ltd. The bearer of this document shall take suitable precautions to prevent the disclosure of any information contained in this document to any parties that do not have the permission to receive that information.

DESIGNER	QA	TEMPLATE # was QT04-05-00.dwg
RKK	This drawing is controlled through Q-PULSE	QT730-03-00.dwg

DIMENSIONS IN INCHES UNLESS OTHERWISE SPECIFIED.
LINEAR TOLERANCES ARE:
X ±0.1 X.X ±0.03
X.XX ±0.01 X.XXX ±0.003
ANGULAR TOLERANCES ARE:
X.X ±0.1 X.XX ±0.05

MATERIAL –

FINISH –

ACAD FILE ..\CONTROLLED DOCUMENTS\05328\0532800S.dwg

AXYS TECHNOLOGIES INC.
P.O.BOX 2219, 2045 MILLS RD.
SIDNEY, B.C., CANADA V8L 3S8
(250)655-5850 Fax:(250)655-5856

NOMAD, Mooring,
3 Point with 58" anchor buoys

SCALE	DRAWN BY	DATE
NTS	RKK	15/01/2012

SHEET	SIZE	DRAWING NUMBER	REV
2 of 2	A	05328	00

Note:

1" SAS = 1" Safety Anchor Shackle

ITEM	PART No.	PART NAME	QTY
1" Safety Anchor Shackle		PARTS LIST	

WET-NZ System Overview

NWEI Proprietary Information
Subject to Non-Disclosure Agreement
Do Not Transmit or Reproduce

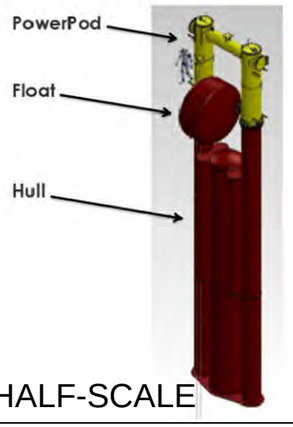

Hull Height/Draft:	15.0 meters
Hull Width:	3.8 meters
Float Diameter:	2.4 meters
Main Tube Diameter:	1.5 meters
Side Tube Diameter:	0.7 meters
Draft (ballasted):	12.8 meters
Displacement (unballasted):	30 metric tons
Displacement (ballasted):	50 metric tons
Rated output:	20 kW

HALF-SCALE

TEST WAVE ENERGY DEVICE

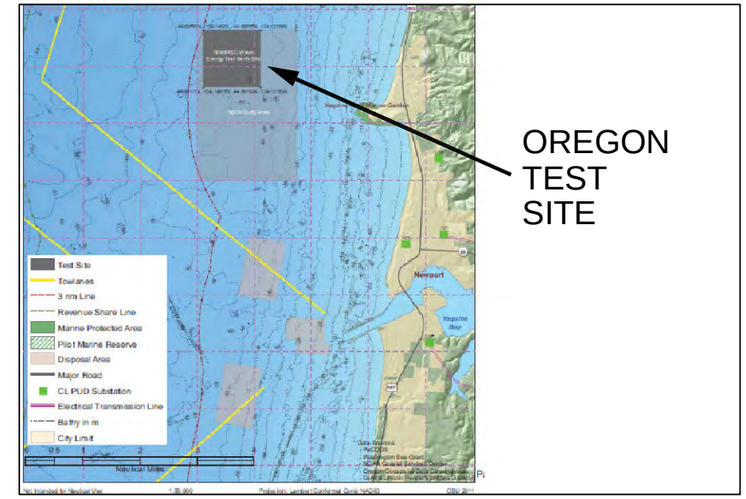

OREGON TEST SITE

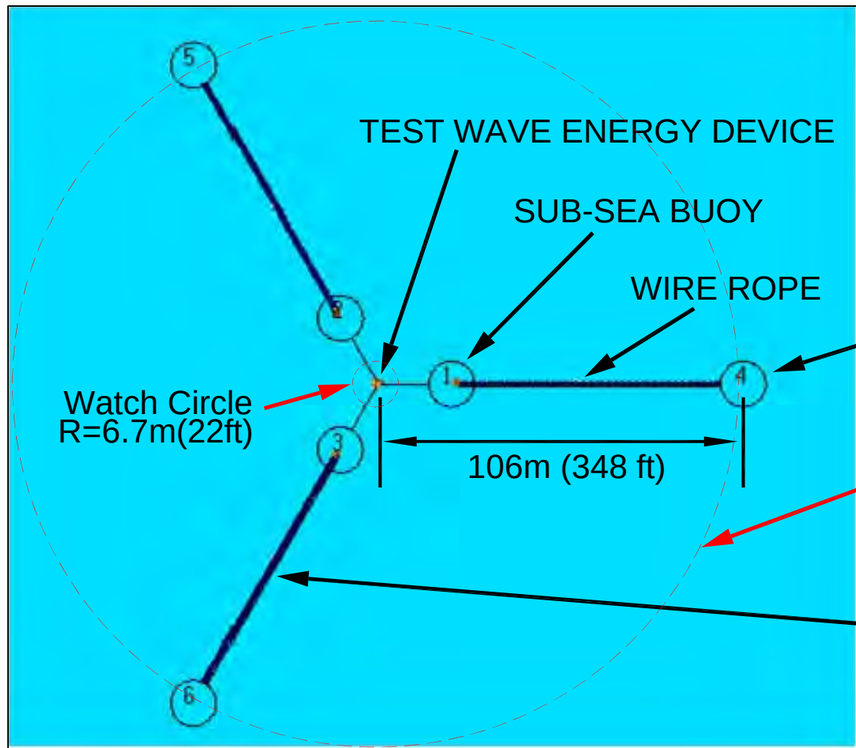

PLAN VIEW (TO SCALE)

NOTES

1. DEVICE TO BE TEMPORARILY MOORED AT THE OREGON TEST SITE (EXACT LOCATION TO BE DETERMINED).

SYMBOL	DESCRIPTION	DATE	APPROVED
	REV1–ADDED WATCH CIRCLE	02/28/12	

REVISIONS

CLIENT: NORTHWEST ENERGY INNOVATIONS PORTLAND, OR
DRAWN BY: W. SEELIG DATE CODE
REVIEWED BY FUNCTIONAL APPROVAL: R. TAYLOR DATE CODE
APPROVED: B. CABLE DATE CODE
SUPERVISOR: B. CABLE DATE

SOUND AND SEA TECHNOLOGY
LYNNWOOD, WA
OREGON
USA

MOORING PLAN VIEW SKETCH
WET–NZ HALF–SCALE TEST

CODE I.D. NO.
DRAWING SIZE: D
CONST. CONT. NO. XXXXX
SPEC.
DRAWING NO. XXXXXXXX
SHEET X OF X
M–1

FILE:M1–PLAN–SST–AutoCAD2000.dwg
PLOT SCALE: NONE

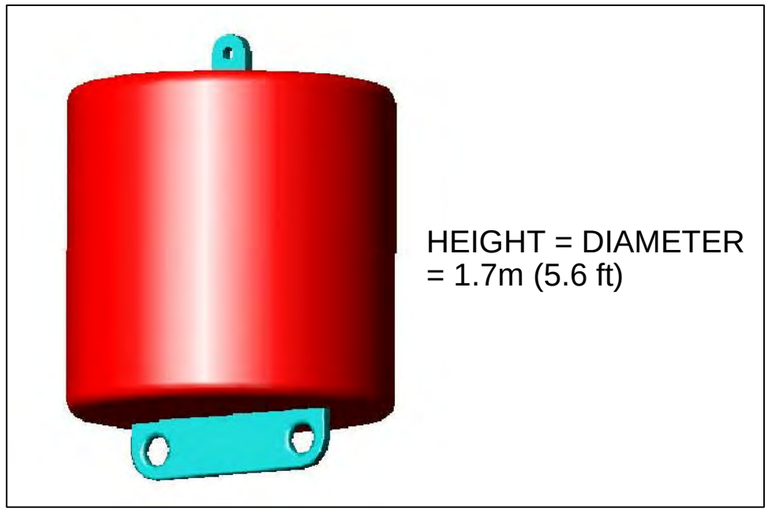

HEIGHT = DIAMETER
= 1.7m (5.6 ft)

URETHANE FOAM
SUB-SEA BUOY

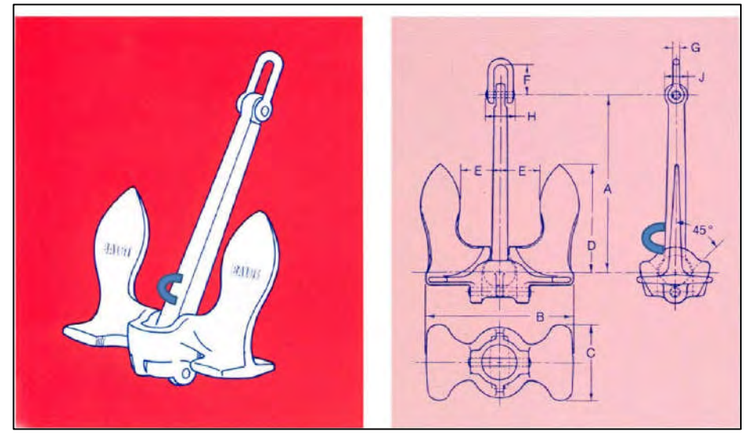

A=2.17m (7.1ft)
B=1.70m (5.5ft)
C=1.04m (3.4ft)

SINKER MADE OF STOCKLESS ANCHORS
WEIGHT = 3,628 kg (8,000 pounds) EACH

WAVE
ENERGY
DEVICE

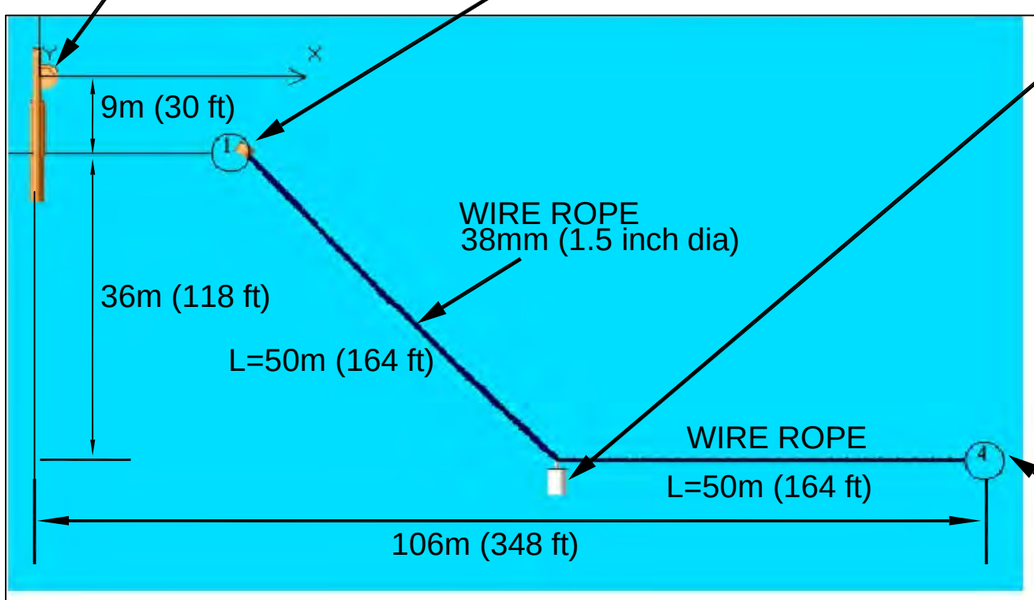

ANCHOR

WATER DEPTH ~ 45m (150 ft)

PROFILE VIEW OF A SINGLE MOORING LEG

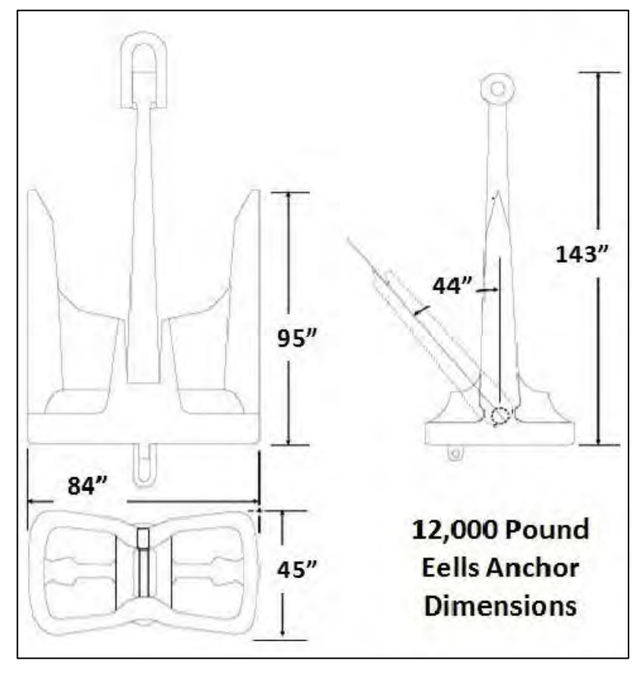

STOCKLESS (EELLS TYPE) ANCHOR
WEIGHT = 5,442 kg (12,000 pounds)

FILE:M2-PROFILE-SST-AutoCAD2000.dwg
PLOT SCALE: NONE

REV 1	UPDATE CONFIGURATION	03/15/12			
REV 2	UPDATE ANCHOR/SINKER	03/26/12			
SYMBOL	DESCRIPTION	DATE	APPROVED		

REVISIONS

CLIENT: NORTHWEST ENERGY INNOVATIONS PORTLAND, OR
DRAWN BY: W. SEELIG DSC: B. CABLE CODE:
REVIEWED BY: R. TAYLOR CHK: B. CABLE CODE:
FUNCTIONAL APPROVAL: DATE REVIEWED BY CUSTOMER DATE
APPROVED: DATE SUPERVISOR DATE
SUPERVISOR

SOUND AND SEA TECHNOLOGY
DURHAM, NH

MOORING LEG PROFILE SKETCH
WET-NZ HALF-SCALE TEST

CODE I.D. NO.
DRAWING SIZE: D
CONST. CONT. NO. XXXXX
SPEC.
DRAWING NO. XXXXXXXX
SHEET X OF X
M-2

Project Fill Summary

System/Component	Material	Quantity	Length ft	Width ft	Height ft	Diameter in	Surface Area ft^2	Volume ft^3	Volume yd^3
Total							**1535.5**	**3295.6**	**122.1**
Ocean Sentinel							**658.6**	**874.6**	**32.4**
Hull	Steel	1	21.25	10.5	24	n/a	223.1	346.0	12.8
Anchors	Concrete	3	5.0	5.0	4.0	n/a	75.0	300	11.1
Anchor Chains	Steel	6	90	n/a	n/a	1	45.0	2.9	0.1
Mooring Lines	Synthetic	3	328	n/a	n/a	1.5	123.0	12.1	0.4
Mooring Buoys	Steel	3	n/a	n/a	n/a	58	55.0	177.4	6.6
Miscellaneous							50.0	27.0	1.0
Umbilical Cable	Copper clad	1	656	n/a	n/a	1.6	87.5	9.2	0.3
WET-NZ Device							**842.8**	**2384.6**	**88.3**
Hull, Float, PowerPod	Steel	1	13.8	10.7	61.6	n/a	147.66	1777.8	65.8
Navy Stockless as Clump Weights	Steel	3	7.2	5.5	3.4	n/a	118.3	49.6	1.8
EELLS Drag Anchors	Steel	3	11.9	7.0	3.7	n/a	249.2	74.4	2.8
Anchor Lines	Steel Wire Rope	3	246	n/a	n/a	1.5	92.25	9.1	0.3
Mooring Lines	Steel Wire Rope	3	164	n/a	n/a	1.5	61.5	6.0	0.2
Miscellaneous Fittings							100	54.0	2.0
Subsurface Floats	Urethane Foam	3	n/a	n/a	5.6	67.2	73.9	413.8	15.3
Triaxys							**34.1**	**36.5**	**1.4**
Device	Steel	1			3.0	36.0	7.1	21.2	0.8
Miscellaneous Fittings							25.0	13.5	0.5
Anchor	Chain	1					2.0	1.8	0.1

3. Installation and Removal Plans

NNMREC will deploy its equipment along with the WET-NZ that is to be tested. Once assembled on the installation vessel (s), all the mooring components will be installed according to this deployment plan, which has been coordinated for all project components to ensure the orderly installation and to minimize mobilization cycles. Using predefined coordinates for the anchor locations identified in this plan, the installation vessel will lower each anchor into place with the mooring lines and attached anchor chain. An acoustic release or similar device will be used to recover the lowering line. The mooring lines will be tied off to a properly lit surface and/or subsurface buoy for temporary storage and the exact installation locations will be recorded for future reference.

Mobilization

Mobilization Site of the Ocean Sentinel

Hatfield Marine Science Center (HMSC) or a local pier area would serve as the mobilization site for receipt of equipment, final Ocean Sentinel outfitting, testing, and launch. Components for the final outfitting such as the transformer, load elements, and masts may be trucked separately from the Ocean Sentinel. Other components such as logistics support containers, mooring lines, anchors, and buoys will be received at the same location as the Ocean Sentinel for staging. Once received in full, the Ocean Sentinel will be outfitted with any final components and launched. Launch of the Ocean Sentinel would use methods available at the mobilization site; it is anticipated that a crane will be employed to launch the Ocean Sentinel into the water pier-side to the mobilization location.

Pier-side tests would check the operation and integration of all the Ocean Sentinel systems. These in-water tests would verify the readiness of systems for towing, power dissipation systems, shore communications, and backup storage. In addition to the Ocean Sentinel mobilization, HMSC and a local transmission tower will be outfitted with shore receive radios, antennas, and computers to receive transmissions from the deployed Ocean Sentinel.

Mobilization of the WET-NZ

The Port of Newport or other local pier area would serve as the site for receipt of material and laydown area for the WET-NZ. Mooring material such as mooring line, buoys, and anchors will be staged at this site for the mooring installation vessel to pick up and transport to the testing site.

Ocean Sentinel Device and Mooring System Installation

Installation of the Ocean Sentinel and its mooring system is described in detail in the NOMAD Buoy and Mooring Deployment Procedures at the end of this plan. It is anticipated that the Ocean Sentinel will be transported to the project site by a tugboat, where it will be attached to its mooring system. The *Oceanus*, a mid-sized research vessel which accommodates a crew of 12 and a scientific party of 19 for up to 30 days at sea, is the candidate vessel for deploying the mooring system (complete vessel specs at http://ceoas.oregonstate.edu/research/vessels/oceanus/). First an anchor will be lowered over the side, lowered to the seafloor, and set into location. The associated mooring line and possible subsurface

buoy would follow attached to the anchor. A surface buoy will be used to secure the mooring line to the surface. This will be repeated for the two remaining mooring legs. Final vessel determinations will be provided to the Corps prior to project development.

WET-NZ Device and Mooring System Installation

It is anticipated that the WET-NZ device will be transported to the site by a tugboat, turned upright, and attached to its mooring system. The SEACOR QUEST, a 160 foot vessel out of Astoria, is the candidate vessel that for deploying the mooring system (see vessel specs at the end of this plan). The deployment vessel will facilitate the connection of the instrumentation buoy with its moorings, likely assisted by a smaller work skiff. Final vessel determinations will be provided to the Corps prior to project development.

It is anticipated that the WET-NZ deployment will be accomplished in one work day. When ready, the power cable will be placed and the ends connected to the instrumentation buoy and WEC device. The final details of this plan are being developed by the WET-NZ device developer to address this installation and connection to the Ocean Sentinel instrumentation buoy. Once installed onto the mooring system, the WET-NZ will undergo a complete commissioning systems tests to verify proper installation and connectivity of the devices once installed on the mooring. All tests will be documented and reports issued at the conclusion of each testing phase. NNMREC shall have a representative present during all WET-NZ installation activities to ensure boundaries are respected, clearance is given to the Ocean Sentinel and any other deployed equipment, and procedures are followed according to best practices.

For the WET-NZ mooring system, the most efficient deployment method appears to be in two phases: deploy two seaward mooring legs and then deploy the single leeward leg. Each mooring leg would consist of a drag anchor, a clump anchor, a subsurface float, and wire and synthetic mooring lines. It is anticipated that the same vessels and marine engineers will be contracted for the deployment of the WET-NZ mooring system.

1. **Seaward Leg Mooring Deployment**

a) With Anchor Line (AL) connected to Mooring Line (ML), connect end of ML to winch wire (WW) and wind onto deck winch. (Figure 2 below)

b) Position anchor on rear deck and lower over stern roller using WW/AL/ML wire assembly and A-f rame as needed.

c) Position anchor approximately 3 anchor lengths beyond final target position to allow for setting.

Figure 1: Anchor Deployment

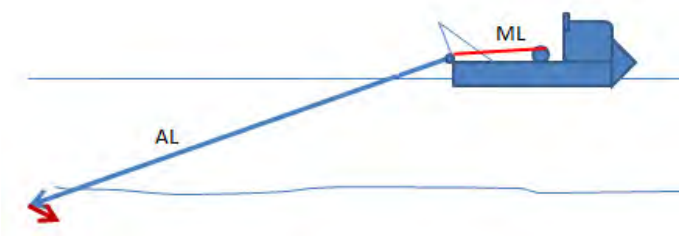

d) Once anchor is on bottom, stop off wire and connect clump to AL/ML interface.

e) Use vessel winch and A-frame as needed to lower clump to seabed with slight angle to keep tension on AL as shown in Figure 3.

f) Stop off the wire and use vessel to apply moderate tension on AL to set anchor.

Figure 2: Clump Deployment

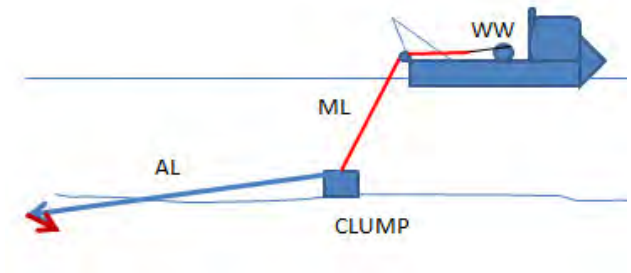

g) Once anchor is set, payout ML as vessel moves towards center of mooring.

h) Stop off ML and disconnect from WW.

i) Connect ML to preassembled subsurface float (SSF)/Buoy Line (BL) and deploy SSF as shown in Figure 4.

Figure 3: Subsurface Float Deployment

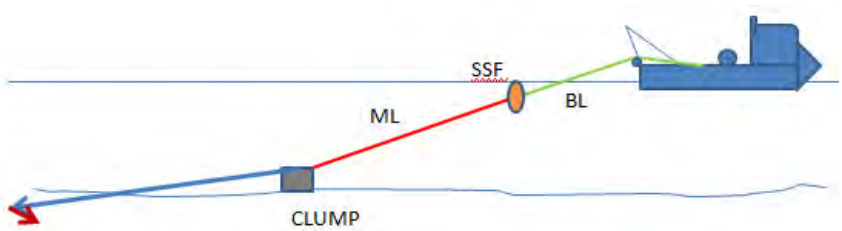

j) Connect BL to temporary float and deploy.

k) Use temporary anchor to keep SSF and BL in place.

l) Repeat steps (a) through (k) for seaward leg #2.

2. Mooring Load Test

a) Bring both #1 and #2 Buoy Lines together as shown in Figure 5 and use vessel to load test to 80% design load.

b) Redeploy Buoy Lines with single temp float and temporary anchor.

Figure 4: Mooring Load Test

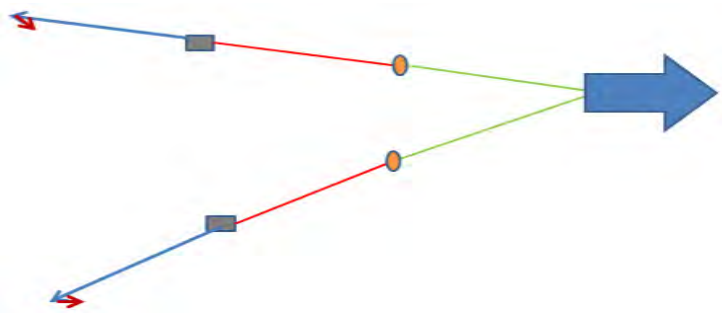

3. Leeward Leg Mooring Deployment

a) With bridle and Buoy Line #3 (BL3) already connected to device, tow WET-NZ device to site and ballast to upright position.

b) Connect device to seaward mooring legs.

c) Pay out BL3 while vessel moves away from center of mooring as shown in Figure 6.

d) Deploy SSF3 with ML3 connected as vessel moves away from device.

Figure 5: Leeward Leg Mooring Deployment

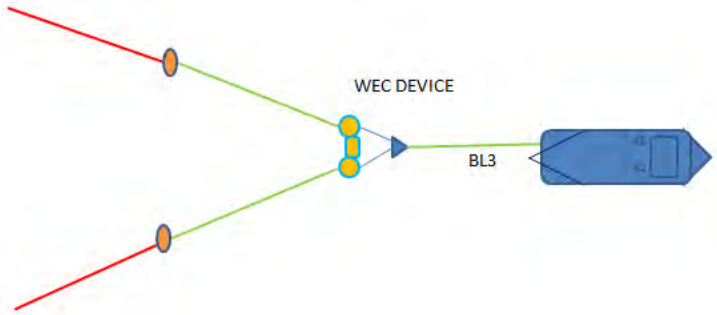

e) Deploy clump #3 as vessel maintains back tension on anchor line as shown in Figure 7.

Figure 6: Leg #3 Clump Deployment

f) Lower anchor #3 using crown line as shown in Figure 8.

g) Haul back on anchor such that it is placed approximately 2 anchor lengths beyond its final target position.

Note: By hauling back on anchor during lowering, the anchor will be oriented properly with the seabed so that it will engage the seabed and start to embed.

Figure 7: Leg #3 Anchor Deployment

WET-NZ Cable Connection to Ocean Sentinel

The Ocean Sentinel will be configured for specific WET-NZ. Current equipment includes an umbilical power and fiber-optic communications marine cable that will be connected between the WET-NZ and the Ocean Sentinel. This is accomplished through a custom connection to the WET-NZ and the Ocean Sentinel, with a universal custom marine connector that will be installed on each device prior to deployment. After the devices are deployed, the umbilical cable is deployed and is connected to the previously installed mating connectors on the WET-NZ and Ocean Sentinel. The WET-NZ developers will be provided with the technical specifications of the cable and connector so they can prepare their device for quick connection to the umbilical cable.

On-Site Commissioning Tests

Once installed in the mooring, the Ocean Sentinel would undergo a series of commissioning tests to test at sea systems and to verify telemetry connectivity to shore. The Ocean Sentinel commissioning testing will occur prior to the installation of the WET-NZ. Once installed in the mooring, the WET-NZ developer will conduct a series of commissioning test to verify proper installation and connectivity up to the point of connecting the cable to the Ocean Sentinel.

Removal and Decommissioning

WET-NZ Removal

When the WET-NZ developer has completed the testing, the device will be locked down and the submarine power cable will be divorced from the WET-NZ. A vessel of opportunity will be used to disconnect and recover the umbilical cable. The cable can temporarily be staged on hang-off buoys after disconnection from the WET-NZ. With the umbilical cable disconnected from the WET-NZ, the WET-NZ and all associated mooring components will be removed from the test site. **The WET-NZ developer will responsibly recover the WET-NZ and all associated materials.** Throughout this process the WET-NZ developer would coordinate with NNMREC for a smooth and orderly removal.

Recovery of Ocean Sentinel

The Ocean Sentinel moorings will be removed at the end of the authorization period for this test (approximately two years), at which time the mooring lines and anchors will be recovered by a vessel of opportunity. The vessel would recover using a winch and/or A-frame and slowly bring each component to the surface and locate on the deck.

Overall Decommissioning

For decommissioning, all system components will be removed from the project site, including the Ocean Sentinels, WET-NZ device, anchors, mooring lines, subsurface floats, and the shore station, and associated telemetry antennas. The website will be closed down. Disposition of equipment and material will be in accordance with a detailed decommissioning plan.

160' MINISUPPLY SEACOR QUEST

SEACOR Marine

MAIN PARTICULARS

LENGTH OVERALL	159 ft.	48 m
LENGTH BP	144 ft.	44 m
BEAM	36 ft.	11 m
DEPTH	12 ft.	4 m
LIGHT DRAFT	7 ft.	2.1 m
LOADED DRAFT	10 ft.	3 m
SUMMER FREEBOARD	2 ft.	1 mm
LIGHTSHIP	398 LT.	405 MT.

CAPACITIES

DRILL WATER	72,900 USG	276 m^3
FUEL	55,400 USG	210 m^3
LIQUID MUD	1,440 BBLS	229 m^3
METHANOL	862 BBLS	137 m^3
POTABLE WATER	8,900 USG	34 m^3
DEADWEIGHT	675 LT.	687 MT.

CARGO DECK

TONNAGE	450 LT.	458 MT.
STRENGTH	0.5 lbs./$ft.^2$	5 MT./m^2
LENGTH	122 ft.	37 m
WIDTH	28 ft.	9 m
CLEAR AREA	3,416 $ft.^2$	317 m^2

TONNAGE

GRT	94 US tons	486 tons
NRT	64 US tons	145 tons

MACHINERY

MAIN ENGINES	2 CAT 3508 B LS
BRAKE HORSEPOWER	1500
REDUCTION GEARS	TD MG 665-000SC
GEAR RATIO	3.21:1
PROPELLERS	HS HTB-4B 64x55
RUDDERS	Two flat plate yoked
AUXILIARY GENERATORS	2 CAT 3304T@99 kW
BOW THRUSTERS	Marprop 300 hp tunnel
LIQUID MUD CIRCULATION	Magnum 5x4x14

PERFORMANCE

MAXIMUM SPEED	12 knots	
CRUISING SPEED	10 knots	
MAXIMUM FUEL CONSUMPTION	100 USG/Hr	9 m^3/24 Hrs
CRUISING FUEL CONSUMPTION	80 USG/Hr	7 m^3/24 Hrs

DISCHARGE RATES

DRILL WATER	400 USG/min @ 80 ft.	91 m^3/Hr @ 24 m
POTABLE WATER	400 USG/min @ 80 ft.	91 m^3/Hr @ 24 m
FUEL OIL	400 USG/min @ 81 ft.	91 m^3/Hr @ 25 m
LIQUID MUD	700 USG/min @ 150 ft.	159 m^3/Hr @ 46 m
METHANOL	400 USG/min @ 80 ft.	91 m^3/Hr @ 24 m

ACCOMMODATIONS

CABINS/BERTHS	6/20
OFFICERS	3
CREW	3
LOUNGE	10
MESS	10

ELECTRONICS & CONTROLS

DEPTH RECORDER	Sounder BBF1
GPS	Furuno GP37
RADAR(S)	2 x Furuno 1933 C/NT
HF RADIO	Furuno FS 1503 SSB
SSB	1X Furuno FS-1503
INTERNET E-MAIL	Globe Offshore
VHF	4 x Icom M 502
AUTOPILOT	Robertson AP-45
WEATHER RADIO	XM

SPECIAL EQUIPMENT

WINDLASS	Coastal w/ Wire Rope 1 Inches 750 ft. 25 mm 229 m
EXTERNAL FIFI	1000 GPM
NUMBER OF MONITORS	1
EEP	Equipped

DOCUMENTATION

CLASS	160 FT. MS
FLAG	United States
USCG	USCG Subchapter L OSV
YEAR BUILT	2002
OFFICIAL NUMBER	1134613
BUILDER	

This specification is preliminary and subject to change without notice. Exact tank capacities, deadweight, deck cargo capacity and other figures that have been calculated and may change when the actual vessel is delivered.

r041410

160' MINISUPPLY SEACOR QUEST

160' MINISUPPLY SEACOR QUEST

SEACOR Marine

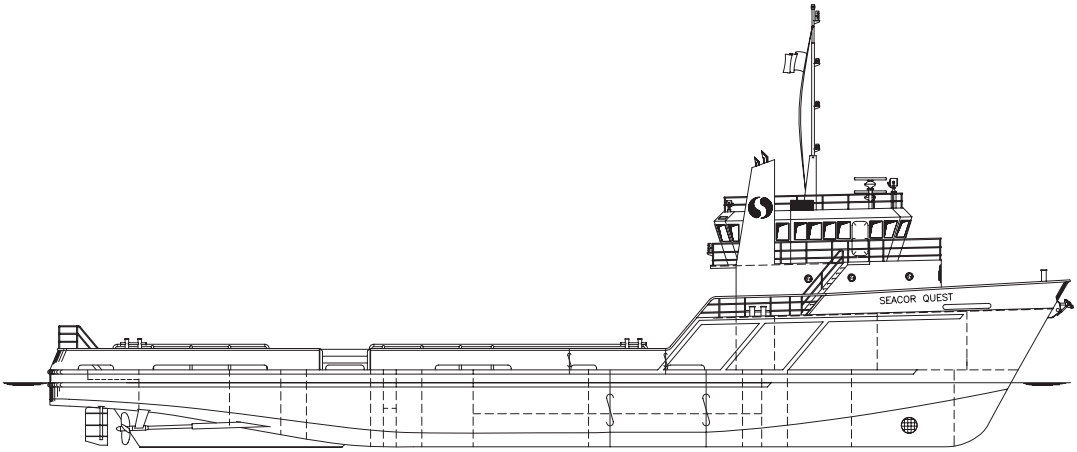

OUTBOARD PROFILE

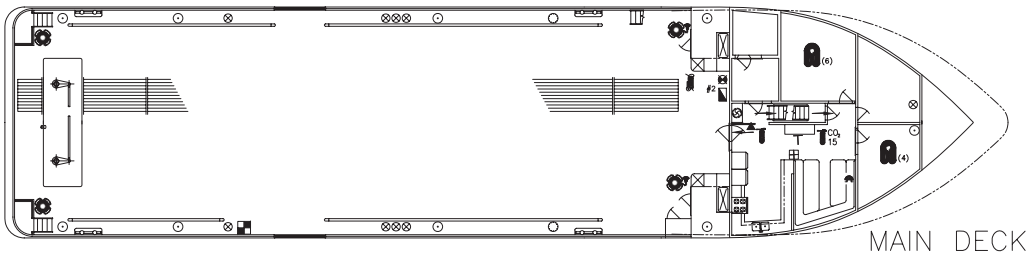

MAIN DECK

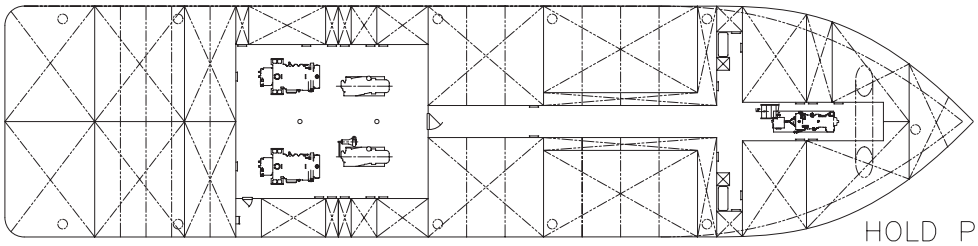

HOLD PLAN

160' MINISUPPLY SEACOR QUEST

NOMAD BUOY AND MOORING DEPLOYMENT PROCEDURES FOR 3 POINT MOORING

Applications Manual 005328Z
Version 00

DRAFT

AXYS Technologies Inc.
2045 Mills Road West
Sidney, British Columbia
Canada V8L 5X2
Telephone: (250) 655-5850 Fax: (250) 655-5856
Email: atiservice@axys.com
www.axystechnologies.com

This Operations Manual contains trade secrets and confidential information, which are proprietary to AXYS Technologies Inc. Its use, reproduction, or disclosure in whole or part without the express written permission of AXYS Technologies Inc. is prohibited. This Operations Manual is also an unpublished work protected under copyright laws. If this work becomes published, the following shall apply:

Copyright 2012 AXYS Technologies Inc
All Rights Reserved

February 2012

DRAFT

Manual Revision History

Revision	Date	Details
00	28-Feb -12	Original Release

Customer Service Information

QUESTIONS, COMMENTS, OR REQUESTS
Contact AXYS Technologies Inc.: Via Email: customerservice@axys.com www.axystechnologies.com Via Phone: (250) 655-5850 (877) 792-7878 Via Fax: (250) 655-5856 Via Mail: AXYS Technologies Inc. 2045 Mills Road Sidney, BC CANADA V8L 5X2 Your input into the operational functionality and features of this system is greatly appreciated and will be taken into account during periodic system design reviews. You will receive all update notices that affect your system.

DRAFT

TABLE of CONTENTS

1.0 PROCEDURE SUMMARY 8
2.0 EQUIPMENT 8
3.0 ANCHOR BUOY MOORING DEPLOYMENT PROCEDURES 11
4.0 NOMAD LAUNCH PROCEDURES 13

Figures

Figure 1. Blakeslip (Pelican Hook Chain Stopper) 9
Figure 2. FRC zodiac next to NOMAD Buoy 9
Figure 3. Detail of Mooring Components for Anchor Buoy 10
Figure 4. Plan View of Anchor Buoy and NOMAD Positions 11
Figure 5. Wire Rope Lifting Sling on Concrete Anchor 12
Figure 6. Anchor over the side and secured with Blakeslip and ready to release 13
Figure 7. NOMAD Deployment. The FRC takes tension on the buoy as it is being lowered into water. 14
Figure 8 Assembly of NOMAD Deck Masts and Structures 15

DRAFT

1.0 PROCEDURE SUMMARY

1.1 Deployment of 3 anchors and buoys. With the aid of Differential GPS and Depth Sounder, the 3 anchors with anchor buoys are deployed by the anchor handling vessel.

1.2 Adjustment of 3 anchors. With the aid of Differential GPS the 3 anchors are repositioned to optimal positions.

1.3 Deployment of NOMAD Buoy. The NOMAD buoy is deployed with 3 of 100m line sections attached to the buoy and secured on the deck. The NOMAD is held just down current/downwind of the seaward/windward buoy.

1.4 A smaller Fast Rubber Craft (FRC) (e.g. zodiac) vessel is used to take the NOMAD bow mooring line to a second vessel which then takes the line seaward (windward-up current) buoy.

1.5 A second vessel takes the second (2nd) mooring line section from the NOMAD and attaches it to the second down current/downwind/seaward anchor buoy.

1.6 The second vessel then takes the third (3rd) mooring line section from the NOMAD and attaches it to the third down current/downwind/landward anchor buoy.

2.0 EQUIPMENT

2.1 Vessel capable of handling NOMAD Buoy.

2.2 Vessel capable of handling and lifting 6 ton anchors and 1-1/2 inch chain.

2.3 Differential GPS system for positioning of anchors.

2.4 Deck gear should include winch and/or crane capable of safely handling 6 ton anchors.

2.5 Deck gear should include chain Blakeslips (Pelican Hook Chain Stoppers) to hold 1 inch and 1-1/2” chain. See Figure 1.

2.6 Line handling Vessel such as a 30 to 40 foot tug boat or fishing vessel or equivalent which is capable of towing NOMAD buoy if necessary.

2.7 Fast Rubber Craft Vessel (FRC) such as a zodiac. See Figure 2.

DRAFT

Figure 1. Blakeslip (Pelican Hook Chain Stopper)

Figure 2. FRC zodiac next to NOMAD Buoy

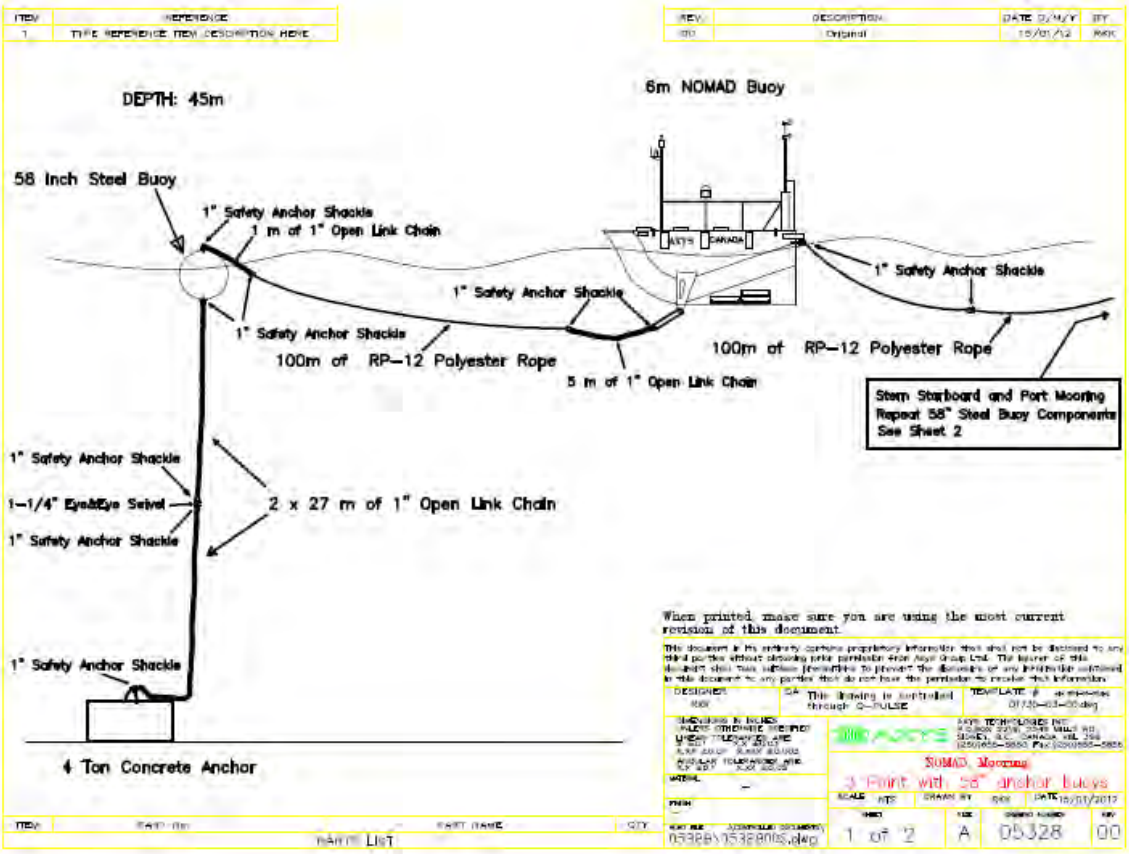

Figure 3. Detail of Mooring Components for Anchor Buoy

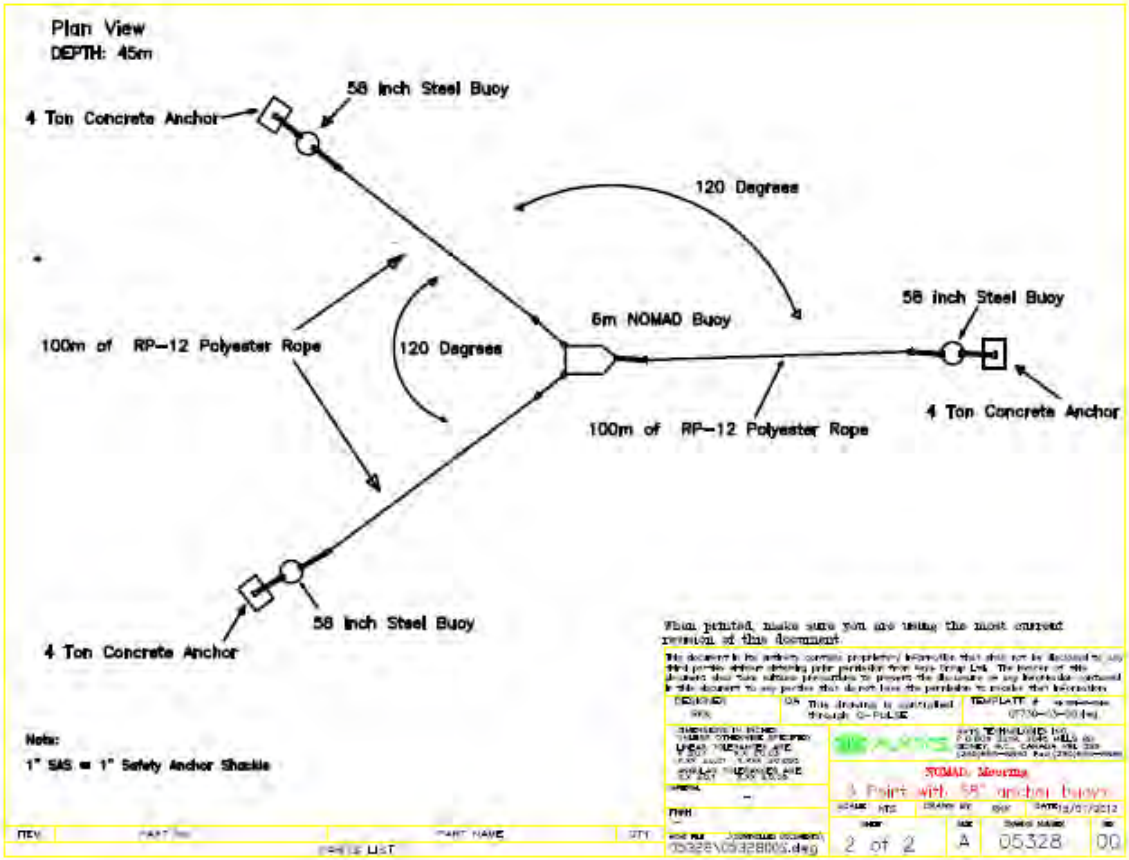

Figure 4. Plan View of Anchor Buoy and NOMAD Positions

3.0 ANCHOR BUOY MOORING DEPLOYMENT PROCEDURES

3.1 Using a differential GPS, preliminary marker buoys are deployed at the 3 anchor positions.

3.2 The FRC (Fast Rubber Craft) should be deployed with 2 to 3 crew.

3.3 A 58 inch buoy and mooring chain and anchor is assembled and prepared for deployment at the marked positions. All permanent shackles should be welded unless they are Split Key Shackles (U.S. Coast Guard 3rd or 4th Class Shackle). The mooring line pendant section is secured to the top of the buoy with a sacrificial rope.
See Figures 3 and 4.

3.4 The chain is secured with a Blakeslip near the buoy end and also near the anchor end. There should be enough chain to allow for the anchor to be lifted over the side. Alternatively, the Blakeslip is secured on the chain at a distance from the anchor so that the anchor may be lifted over the side with a wire rope sling. See Figure 5. After the anchor is over the side the Blakeslip is positioned at a distance on the chain that is close to the anchor and tension taken by the Blakeslip. The Blakeslip safety pin is secured.

3.5 The wire rope sling is then removed. If necessary, the chain should be reflaked to allow for continuous streaming over the side. See Figure 6. All personnel should stand well away from the chain. No person should ever walk on top the chain on deck or between the chain and the side of the vessel or in the bite of the chain.

3.6 The 58 inch buoy is then similarly lifted over the side and secured with a Blakeslip.

3.7 The vessel then maneuvers to a position near the marker buoy, but just outside the radius of the 3 point mooring.

3.8 Once near position, the safety pins for the 2 Blakeslips are removed. The Commanding Officer (Captain) of the Vessel will then give the signal to release the mooring. Simultaneously, the blakeslip Hook Bail is knocked clear to release the hook. The 2 deckhands that have knocked the bails clear should immediately move away from the blakeslip and chain that is now streaming over the side.

3.9 If necessary, a towing line should be passed from the deployment vessel to the FRC, the crew of which will attach to the anchor buoy. The anchor will then be repositioned to a more accurate position.

3.10 This should be repeated for the other 2 anchors.

Figure 5. Wire Rope Lifting Sling on Concrete Anchor

DRAFT

Figure 6. Anchor over the side and secured with Blakeslip and ready to release

3.11 The NOMAD buoy is then prepared for deployment. The 3 mooring lines are secured to the deck of the NOMAD and the chain pendant sections secured with sacrificial rope.

4.0 NOMAD LAUNCH PROCEDURES

4.1 When buoy is ready, the crane hook is connected to lifting bridle with tubular strop and tripline tied to hook. Strop should be secured to bridle ring with light line.

4.2 Bow line is passed to small boat

4.3 Stern line is shackled to wire pennant at stern of buoy used for cross deck wire.

4.4 With derrick slewed slightly outboard of bulwarks, buoy is lifted clear, allowed to swing outboard, and lowered to water.

4.5 Small boat takes up slack on bow line and keeps buoy away from ship. See Figure 7.

4.6 Outer hook is tripped clear of strop and brought inboard. Boat continues to pull buoy away from ship. Bow and stern lines are slipped and recovered by boat.

4.7 Note: It may be useful to secure yoke in raised position with 5/8 inch or 3/4 inch rope to gain room for clearing bulwarks. It should be secured in a manner that will allow it to be cut free from deck of buoy by boat crew.

Figure 7. NOMAD Deployment. The FRC takes tension on the buoy as it is being lowered into water.

4.7 The FRC then passes the bow towing line to the Line Handling vessel. The Line Handling vessel then tows the NOMAD to Seaward/Windward/Up Current Anchor Buoy. With the aid of the FRC the bow mooring line is attached to the anchor buoy pendant chain. The pendant chain sacrificial rope is cut to release the pendant chain from the anchor buoy.

4.8 The towing line is reposition to a stern quarter cleat of the NOMAD and passed to the mooring deployment vessel.

4.9 The bow mooring line securing ropes are released and it is allowed to stream out as the deployment vessel maneuvers the NOMAD to the central position of the 3 point mooring.

4.10 Once near the central position the FRC detaches the 2nd mooring line pendant chain. The FRC then passes the 2nd stern mooring line to the Line Handling Vessel. This line is taken to the Seaward/Down-wind/Down-current anchor buoy. With the aid of the FRC the line is attached to the chain pendant section of the 2nd anchor buoy and it is released from the buoy. The Deployment Vessels should maneuver to avoid inadvertently getting caught on the mooring lines.

4.11 With the aid of the FRC the 3rd mooring line secured on the NOMAD is release and is passed to the Line Handling vessel.

4.12 The 3rd mooring line is then attached to the 3rd anchor buoy chain pendant section which is then released by cutting the sacrificial rope. If necessary, The Deployment Vessel and Line Handling Vessel may have to, with coordination, maneuver the NOMAD to allow for an easy attachment.

4.13 The Deployment Vessel should then release the NOMAD. The mooring should be allowed to settle for an hour.

4.14 The NOMAD and 3 anchor buoy positions should be accurately determined with the Differential GPS. The NOMAD should be observed to determine if the tensions on the mooring lines are evenly distributed as expected. If the tension on one leg of the mooring seems excessive then that anchor buoy should be attached to the Deployment and towed to a better position.

4.15 A crew should then be dispatched on the FRC to assembly the NOMAD Buoy masts and deck structures. See Figure 8.

Figure 8. Assembly of NOMAD Deck Masts and Structures

4.20 Transit of NOMAD by Towing.

The National Data Buoy Center of NOMAD Field Service Manual 1987 provides a procedure for the towing of the NOMAD. The following is excerpted from Section 2.3 of this Manual:

"The prefered method of transit to station is towing. The buoy can be placed in the water in the protected confines of a harbor in its deployed configuration. The best method of towing is by the mooring. It can be towed from its mooring at speeds up to 8 to 10 knots in calm to moderate seas. Towing by the mooring also makes it possible to deploy the buoy in less favorable sea conditions. To avoid snagging the tow while in shallow waters, drape the buoy's upper mooring around the bow of the buoy with rotten stops. After reaching sufficient water depth release the chain and lengthen the tow to the desired distance for transit to the station."
End of excerpt.

In the case of the 3 point mooring, the mooring yoke will have a length of pendant chain that is to be connected to a 100 meter line of the 3 point mooring. For towing a wire rope cable or towing line can be attached to the chain that is attached to the NOMAD mooring Yoke. Once on site the 100m mooring line is attached to the mooring yoke then passed to the Line Handling Vessel. Also, in this case of towing. The Line Handling Vessel should carry the other 2 of 100m mooring lines and attach them with the aid of the FRC once on site. Also the stern pendant chains should be secured tightly to the deck in the harbor before towing.

DRAFT

4: Operations and Maintenance

Operational and maintenance requirements include monitoring, alarm system tests, training, verification of data receipt and storage, data archiving, dispatch of response, reporting and many other tasks as discussed in this plan. Supporting on-water operations will be performed to commission WET-NZ testing, including startup and continuing operations. This O&M Plan document details operations for the Ocean Sentinel and discusses the various related points for the WET-NZ device. In addition, marine mammal observation and pinniped haulout protocols are provided at the end of this plan.

Operations and Maintenance Team

A standard team will be used during the operations and maintenance period of the Ocean Sentinel. This team shall be comprised of NNMREC staff, subcontractors, and WET-NZ developers. These team members, along with brief descriptions of their functions, are included below.

Northwest National Marine Renewable Energy Center (NNMREC)

NNMREC shall serve as the primary resource and contracts source for the Ocean Sentinel. The Program Manager with a supporting staff, help to ensure WET-NZ developer and WET-NZ subcontractor coordination, and compliance to agreement and contract terms and conditions. Supporting staff includes administrative, engineering, operations, contracts, and marketing support.

Program Manager

The Program Manager (PM) is responsible for the overall management of NNMREC programs and projects for the Ocean Sentinel. The PM shall oversee all activity related to the operation of the Ocean Sentinel. The PM, together with the Ocean Test Facilities Manager (OTFM), shall assist with coordination between the Ocean Sentinel and the US Coast Guard and other stakeholders, including WET-NZ developers, subcontractors, consultants, the local community, trade groups, emergency response organizations, regulatory agencies, and other stakeholders, as required.

Ocean Sentinel Facilities Engineer

The Ocean Test Facilities Manager (OTFM) is responsible for maintaining the Ocean Sentinel including deployment and recovery options, maintenance reporting and tracking, and most importantly acknowledgement and response to alarms and emergency conditions. The OTFM shall be the primary point of contact for all the subcontractors assisting in any operation surrounding the Ocean Sentinel. A backup OTFM will be available at all times (on call) during deployment operations.

Training

NNMREC shall complete training for all personnel maintaining or working on the Ocean Sentinel. This training shall include Ocean Sentinel specific training (including electrical safety, sensors, reporting, and maintenance logs) as well as WET-NZ-specific training. This training may be conducted by the offsite engineering subcontractor and WET-NZ vendor in lieu of NNMREC.

Support

A variety of functions are required to support the NNMREC PM, and OTFM, including administrative, engineering, operations, contracts, public affairs, and marketing. Administrative support is provided to the OTFM to support procurement needs for the site, site scheduling, WET-NZ coordination, and other duties as needed. Contract support is provided to assist the PM in the placement of contracts with subcontractors for operations and maintenance activities, marine and land support, as well as with contracts with WET-NZ vendors. Contract support, with outside support from an engineering team, is responsible for ensuring the WET-NZ vendors meet the minimum requirements and Ocean Sentinel terms and conditions are agreed to. Contracts support staff ensures WET-NZ developer understanding of site operations, site terms and conditions, and available Ocean Sentinel schedule. Marketing and Public Affairs support has dual function to market the Ocean Sentinel to both WET-NZ vendors and the local community. This support helps to ensure that stakeholder and the public at large understands the nature of the tests and what comprises each test. Sea Grant staff and other support personnel provide marketing and materials support to the wave energy and scientific communities, as well as assist with planning regular community outreach events during the initial construction and operations of the Ocean Sentinel.

Wave Measurement Instruments

Additional instrumentation to measure the wave height, period, and direction, known as Wave Measurement Instruments (WMIs), may be deployed at the site in addition to the WET-NZ and Ocean Sentinel. These instruments will be deployed, maintained, and monitored by NNMREC. The deployment of these devices will serve to assist in the analysis of the WET-NZ power output. Placement of these instruments in the permitted site will be in accordance with existing and planned installation activities and devices. These devices typically are support on single point moorings and may vary depending upon the requirements of the specific test or research being conducted.

Subcontractors

Various subcontractors will be used to assist NNMREC, and the WET-NZ developers, with the operations of the proposed project. These subcontractors include monitoring staff, engineers, marine support, and emergency response.

Offsite Engineering

An offsite engineering team will conduct a review of WET-NZ prior deployment for testing with the Ocean Sentinel, address configuration control for varying test configurations, and provide maintenance support as needed. This analysis will include WET-NZ structural analysis and mooring design.

Data Analysis and Reporting

Data analysis and reporting will be as agreed in the contract with the WET-NZ developer.

Marine Support

A marine support contract will be needed to support the various types of at-sea maintenance. The marine support contractor will need to include on-call vessel support. The contracted vessel will need to be capable of withstanding local sea climates, safely mooring next to the Ocean Sentinel, carrying small

payloads, and other important tasks. Specific characteristics of this vessel have not yet been determined. Since the marine support vessel will be needed for regularly scheduled maintenance trips, as well as unplanned maintenance trips, NNMREC shall contract with a local vendor to provide vessel services. These services will come with a planned, short notice, and immediate charter rate.

Training

All personnel associated with operations of the Ocean Sentinel and associated WET-NZ will be trained in accordance with a safety management plan. Topics include:

1. Medium voltage electrical safety;
2. Cardio-Pulmonary Resuscitation (CPR),
3. Automatic External Defibrillator (AED),
4. Hypothermia and First Aid;
5. Personnel protective equipment and fall protection;
6. Ocean Sentinel access procedures;
7. Confined space access and control, gas free, and ventilation procedures;
8. Shutdown and isolation procedures and tools including lockdown and tagout; work authorization procedures;
9. Security; evacuation; rescue procedures;
10. Towing and Mooring Procedures;
11. Boat operation requirements will be addressed for each vessel employed. NNMREC will determine the refresher training frequency and schedule.
12. Fire safety
13. Wildlife haulout and associated procedures

Operational and Testing Periods

Testing of the WET-NZ with the Ocean Sentinel will only occur between the months of June and October.

Monitoring

Continuous On-shore monitoring of the Ocean Sentinel (OS) instrumentation buoy and WET-NZ device will commence immediately after deployment. NNMREC will maintain a dedicated staff person to be in charge of daily monitoring of the instrumentation for the deployed equipment. This person will also respond to alarms and initiate emergency response, if required. The staff person will monitor a prearranged set of WET-NZ and Ocean Sentinel device parameters either directly through the umbilical cable or through an external Internet-based interface into the instrumentation buoy's monitoring computer. A remote telemetry system will be utilized for this data monitoring. The data stream will be available for local and remote monitoring, data analysis, and reporting.

Initial Monitoring

Monitoring may include a variety of Ocean Sentinel and WET-NZ characteristics, including the data analysis, alarm monitoring, and website maintenance. The type and frequency of data analysis and reporting has not yet been finalized, but various levels of monitoring capabilities are available. Environmental monitoring is described in Attachment 7.

Long Term Operations

The site will be monitored on an uninterrupted basis through the Data Acquisition and Telemetry Infrastructure.

Shore Station Monitoring System

A network based graphical user interface for monitoring the Ocean Sentinel will be used. This interface will be and broadcast through the Internet. Users will be able to log into the interface from any computer connected to the Internet using usernames and passwords to view data, make changes to the system, and address alarms. Varying levels of access will be granted to this interface based on the user's needs or level of granted permissions.

Joint Monitoring

In accordance with the agreement with the WET-NZ developer, joint monitoring of the WET-NZ is expected both during the initial operating/test period and throughout the testing period. The exact method of joint monitoring will be determined prior to deployment. Monitoring data for the WET-NZ will be transferred through the umbilical cable to the Ocean Sentinel, where it will be transmitted to the NNMREC shore station.

Data Analysis and Reporting

Preliminary data collection and analysis parameters include those in the bulleted list below. This list will be continually developed, and would include parameters such as pressure and flow.

- Electrical Performance Summary
- Hours of Operation
- Voltage Range-High, Low, Average
- Current
- Power
- 24 hour plot (WET-NZ vendor access)
- Environmental data parameters
- Various other potential parameters

Alarms

A detailed alarm response manual will be developed as part of the monitoring plan to address alarms. The alarm response manual will provide a series of decision trees to assist the OTFM, or monitoring engineer, in determining the next step, logging procedures, and points of contact. All alarms will be logged by the system. Alarm logs will be periodically reviewed to assist in determining faulty sensors or

problematic systems. WET-NZ representatives shall monitor their alarms and will advise the Ocean Sentinel monitoring engineer that they have received, acknowledge, and addressed their alarm in accordance with the WET-NZ alarm response manual. WET-NZ-specific alarm manual will be prepared and submitted by the WET-NZ developer, reviewed and approved by NNMREC, then incorporated into the WET-NZ-specific deployment.

The following list provides a basic level of alarm parameter that could be utilized:

- WET-NZ Based Alarms
- Exceed Watch Circle (Failed Mooring)
- Power Output
- Sensors
- Basic Alarm
- System Condition
- Environmental
- Sensor Offline
- Moderate
- Storage Disk Failure
- Communications Failure
- Unauthorized User (Data Access)
- Ground Fault
- Exceed Watch Circle (Failed Mooring)
- Bilge Pump
- Intruder Alarm (Physical)

Maintenance Plan

The maintenance plan outlines specific details of the types of maintenance that are required, when and how the maintenance will be done, and what resources will be required. This is discussed in greater detail below.

Maintenance Team

The maintenance team is comprised of the following individuals or groups of individuals, and includes resources they are responsible to mobilize:

- Facilities Engineer
- Backup Facilities Engineer
- Technician
- Tow Assist Team
- Subcontractors (marine resources, fabrication, repair, etc.)

Maintenance

Visual Inspections

Visual inspections, maintenance operations, and safety checks of the project devices will be performed every 4 weeks, and weekly visits may be conducted initially. This will include retrieving data storage devices, replacing batteries, and conducting any other corrective maintenance as needed. Visual inspections of the devices above and below water line will be made for signs of premature wear or excessive bio-fouling. Aids to navigation will also be visually inspected during these visits. In addition, associated monitoring equipment will be periodically installed and recovered (depending on the parameters being monitored, battery life, and data storage capacity of the devices).

The Ocean Sentinel is inspected visually through the camera and through regular maintenance trips on the pre-determined schedule. The inspection will determine maintenance requirements. NNMREC will conduct both announced and unannounced safety inspections. If pier-side, this inspection may include internal wiring and ground system.

Prior to removal of the deployment, appropriate inspection techniques will be used to view underwater components of the project, including looking for any accumulation of derelict fishing gear. All inspections will be carried out inconsideration of safety of personnel and weather permitting. This inspection will be logged and will help to gain a greater understanding of system component aging.

Scheduled Maintenance

Maintenance is done based on length of operational use or at predetermined intervals of time. The results of the maintenance will provide an understanding of future maintenance requirements. A list of the basic maintenance items, include:

- Solar panel cleaning
- Anemometer and wind bird inspection
- Inspection and cleaning of marine growth build-up
- Evidence of bird or marine mammal presence
- Hull inspection will follow manufacturer's recommendations
- Load element inspection
- Mooring lines
- Umbilical cable connection point and integrity
- Many other items to be compiled in maintenance plan

The WET-NZ device and the OS itself could undergo specific maintenance, in general, as follows:

- **Retrieval for on-shore inspection** -The WET-NZ device and Ocean Sentinel would be disconnected electrically, detached from their moorings, and taken to port for inspection and refurbishment as required. This maintenance may include the change of load elements, re-routing of electrical wires, etc. When the devices are removed from the mooring systems for

maintenance, the mooring lines will be connected to each other as if the device were still on station and supported with an additional subsurface float (SSF). The SSF maintains tension on the mooring system so there is no slack introduced into the mooring system.

- **On-shore inspection and refurbishment** - When the devices are removed from moorings at the end of the deployment period, it is anticipated that they will be taken out of water and cleaned, after which an external visual inspection will be carried out. Full internal inspections will also be performed, including replacement of worn or damaged components. The lid seals, hydraulic cylinder seals, and bearing pads will all be replaced as appropriate based on their condition. The hydraulic fluid will be tested and replaced, if required.
- **Redeployment after inspection** - The devices will be towed out from port, reconnected electrically, attached to all moorings, and the test will resume.

Condition-Based Maintenance

Monitoring of equipment condition is used to analyze operational status and trends. Operational parameter limits, warnings and alarms serve to initiate investigative and/or corrective maintenance.

Corrective Maintenance

This maintenance is when required and may be between scheduled maintenance. The change in schedule could be due to:

- Failure of equipment or hardware,
- Predicted failure during an inspection, or
- Accelerated maintenance to be available during a specific time frame, when normal maintenance will be done.

In addition to the above, maintenance that can be done while in the moor will be identified as well as maintenance that must be done pier-side and in dry-dock identified.

Any unscheduled maintenance will be completed as necessary, with consideration for safety of personnel and protection of the environment. During operation, either the instrumentation buoy or the WET-NZ device may require removal from the mooring. A vessel of opportunity will be employed to travel to the site, disconnect each mooring line, and transport the instrumentation buoy or WET-NZ device back to Newport. The instrumentation buoy or WET-NZ device will be repaired, serviced, or modified as needed; it will be subsequently tested, and once validated, towed back to the site for reinstallation. When removed from the project site mooring, there may be a need for dockside mooring in Newport for the WET-NZ device. These moorings will occur at existing piers and docks in the Port of Newport and in agreement with the owner.

On-Site Maintenance

Initially, weekly visits to the Ocean Sentinel will be conducted. These visits will serve to visually inspect the exterior of the Ocean Sentinel for signs of premature wear, excessive bio-fouling, or to address

minor modifications desired by the team that cannot be modified from shore. These visits will be 1-2 hours in length. Additional visits will be dependent upon the testing duration and the weather. In general, interior access is not planned while installed in the mooring. Inspection of the load elements and cage on port or starboard side may be accomplished with cameras but no at sea maintenance is planned. Once operational and functioning the Ocean Sentinel will require very few maintenance trips. Regularly scheduled maintenance trips will be required to retrieve data storage devices, replace batteries, clean solar panels, and any other corrective maintenance specifically authorized for accomplishment. It is anticipated that these maintenance trips will take 4-6 hours and be needed every 4 weeks. If weather precludes visitation, additional video surveillance, data compression, and backup batteries may be utilized. Inspection and maintenance of the mooring system for fouling or other condition will be done after removal. It is anticipated that mooring remaining on site for extended periods of time (over the winter) will require underwater inspection. At the current time, it is planned that the mooring will be removed after the testing season. All WET-NZ inspection will be conducted in accordance with the approved WET-NZ maintenance plan. Additional surveillance by FINE will be in accordance with their agreement.

Maintenance Reporting

Four types of maintenance reports will be generated: (1) Inspection Reports, (2) Scheduled Maintenance, (3) Condition-Based Maintenance, and (4) Corrective Maintenance. Each of these forms will be located in the Maintenance Plan along with guidelines for completing them. Each maintenance report shall be given a unique serial number following a pre-designated plan and tracked according to that number.

Operations and Maintenance Training

All maintenance personnel will receive training specific to the Ocean Sentinel. This training will include electrical safety training, safety training required for on-water work, Ocean Sentinel specific systems, and any other pertinent training deemed necessary. Each WET-NZ vendor shall give WET-NZ specific training to the FE and any applicable technicians. While NNMREC will not be responsible for WET-NZ operations and maintenance, it may become a necessity for the FE to assist with WET-NZ emergency operations and thus should be familiar with the WET-NZ operations.

Management and storage of spare parts

Spare parts will be provided as required for maintenance. Spares will be available within NNMREC or from suppliers for components, which may require repair or replacement. Spares planned to be available are anticipated to include:

- hydraulic cylinder seals
- access hatch seals
- top lid seals
- bearing pads
- hydraulic fluid
- navigation lights

- control and electronic cards and components

NNMREC will have logistics support containers with materials and equipment to support mobilization, installation, testing, as well as tools, consumables, spare components, and parts. These containers will be stored at HMSC or a local marina.

Extreme Events

Extreme events that occur at or outside the design requirements will require thorough evaluation of the Ocean Sentinel prior to resumption of normal operations. These events included unusually high waves, high winds, earthquake, electrical fault, automatic protective action, master alarm, or tsunami. Please refer to the Emergency Response and Recovery Plan.

Self-Evaluation

NNMREC will conduct an annual self-evaluation of operations and maintenance and conduct a safety, corrosion, structural integrity, tamper seals and locks, and attachment point inspection of the Ocean Sentinel, preventive maintenance schedule and any deferred items, and supporting facilities. Attribute list will be attached once the equipment manufacturer submits the documentation. NNMREC will review the self-evaluation and will formally document the results and any findings. Ocean Sentinel will utilize the Bureau of Ocean Energy Management (BOEM) conventions for reports: a Potential Indication of Non-conforming Condition (PINC) or Indication of Non-Conformance (INC). The response will be based on the severity of the finding. Any INC will be thoroughly evaluated to ensure the complete facts are documented and corrective actions identified. All action items will be tracked until completed and the appropriate action shave been taken.

Marine Mammal Observations

If marine mammals are observed entangled or impinged at the Project or in derelict gear on a Project structure, NNMREC will immediately follow the Reporting Protocol provided below for Injured or Stranded Marine Mammals and give NMFS all available information on the incident. In addition, NNMREC will immediately contact the Adaptive Management Group and consult with them regarding modifying the Project and/or monitoring plans.

Reporting Protocol for Injured or Stranded Marine Mammals:

NNMREC proposes to implement the following NMFS protocols in the event an injured or stranded marine mammal is observed:

i. *Live marine mammals observed swimming but appearing debilitated or injured.*

Capability to respond to free swimming animals is very limited and relocation is a major issue. In addition, medical treatment facilities are for the most part non-existent in Oregon. Therefore we recommend that monitors record the sighting as part of the monitoring report. The data should include: 1) species or common name or animal involved; 2) date of observation; 3) location (lat/long in decimal degrees); description of injuries or unusual behavior observed.

ii. *Live marine mammals observed entangled in fishing gear or marine debris.*

The marine mammal disentanglement network in Oregon is based at Hatfield Marine Science Center - contact Jim Rice at 541-867-0446 or Barb Lagerquist at 541-867-0128. Contact should be made immediately if an entanglement is observed and, if possible the reporting vessel should remain on scene while contact is made. Report should include the following information: 1) Species or common name of animal involved; 2) location (lat/long in decimal degrees); 3) whether the animal is anchored by the gear or swimming with the gear in tow; 4) a description of the entangling gear (line size, line color, size number and color of floats if attached, presence or absence of pots or webbing; 5) if towing gear give direction of travel and current speed; 6) local weather conditions (sea state, wind speed and direction). The disentanglement network will determine whether or not a response can be mounted immediately and will advise the reporting vessel on next steps.

iii. *Dead marine mammals observed floating at sea.*

Dead floating marine mammals fall within the definition of "stranded" under the MMPA. To report strandings off central Oregon coast contact the Oregon Marine Mammal Stranding Network (Jim Rice) 541-867-0446.

iv. *Dead protected species found entangled or otherwise impinged at the project.*

These should be reported as part of the monitoring report to NMFS giving all available information on the case. The report should include the following information; 1) Species or common name of animal involved; 2) location (lat/long in decimal degrees); 3) whether the animal was found on the buoy or anchoring system; 4) a description of injuries or entanglement observed; if derelict fishing gear or other debris was involved give a description of the gear (line size, line color, size number and color of floats if attached, presence or absence of pots or webbing; photographs if possible. In the event derelict gear is involved the presence of protected species entangled in the gear should be included in the report initiating gear removal planning and coordination.

Pinniped Haulout Protocols

If pinnipeds are identified on one of the project structures, NNMREC will implement the NMFS haulout protocols listed below. In addition, NNMREC will notify the appropriate resource agencies within two weeks.

i. If pinnipeds were present on one of the project structures, monitoring or maintenance activities would occur at minimum of 100 yards from the structure (in accordance with the current NMFS guideline of 100 yards for vessel approach of hauled out pinnipeds).

ii. If the pinnipeds do not leave the structure upon approach up to 100 yards and the pinnipeds are non-ESA listed species (e.g., California sea lions), NNMREC can proceed to deter the pinniped from project structures so long as such measures do not result in the death or serious injury of the animal (pursuant to Section 101. (a)(4)(A) of the Marine Mammal Protection Act).

iii. If pinnipeds are Steller sea lions (an endangered species), NNMREC will not pursue any directed take or intentional harassment, and will remain at least 100 yards from the equipment so long as the ESA-listed species is present. If NNMREC needs to perform emergency maintenance that requires immediate attention regardless of pinniped presence, NNMREC staff will conduct such activities in compliance with the conditions of the Nationwide Permit, and the NNMREC Response Coordinator will provide an account of the incident to the appropriate staff at NMFS as soon as possible.

5: Navigational Lighting Plan

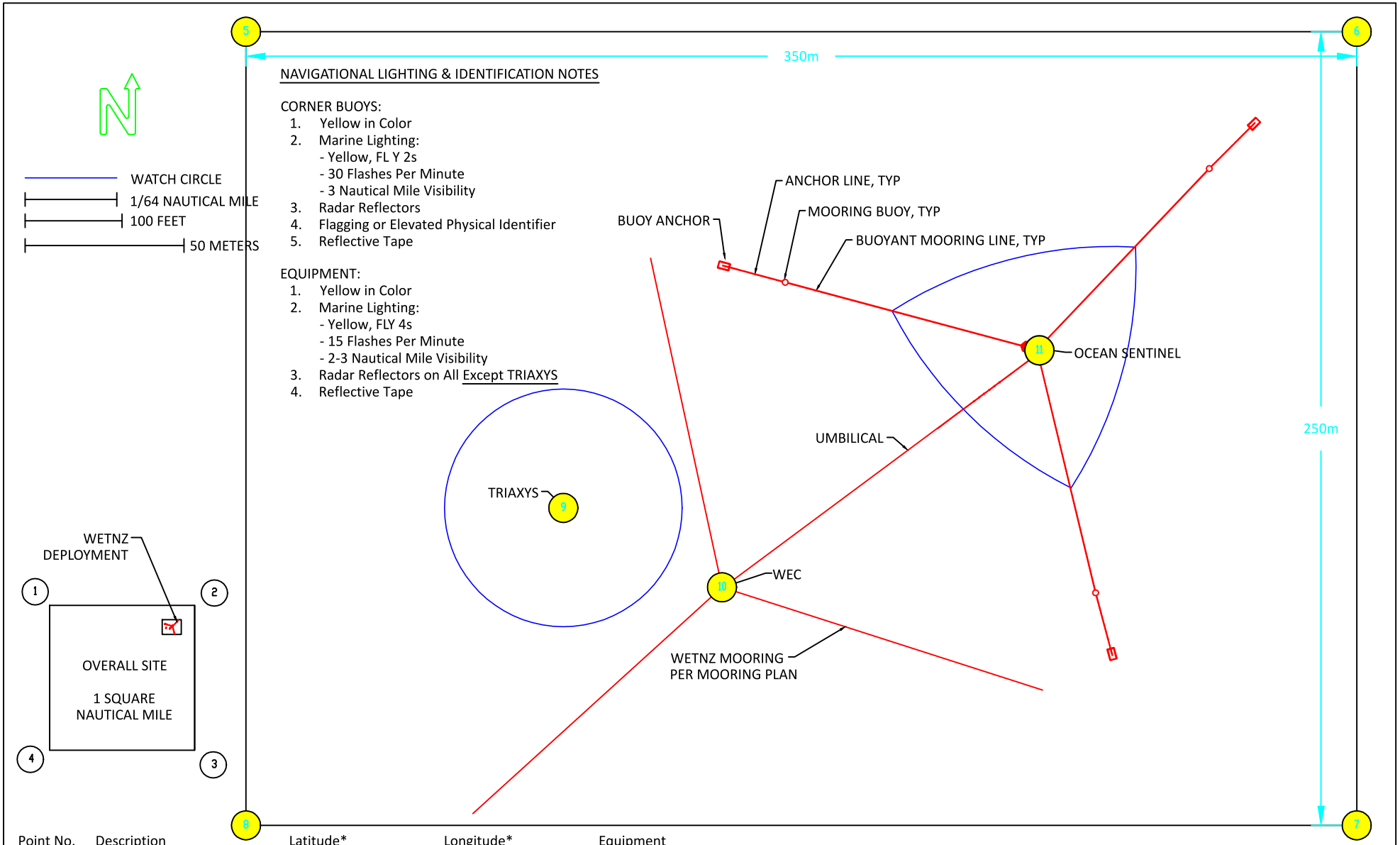

NAVIGATIONAL LIGHTING & IDENTIFICATION NOTES

CORNER BUOYS:
1. Yellow in Color
2. Marine Lighting:
   - Yellow, FL Y 2s
   - 30 Flashes Per Minute
   - 3 Nautical Mile Visibility
3. Radar Reflectors
4. Flagging or Elevated Physical Identifier
5. Reflective Tape

EQUIPMENT:
1. Yellow in Color
2. Marine Lighting:
   - Yellow, FLY 4s
   - 15 Flashes Per Minute
   - 2-3 Nautical Mile Visibility
3. Radar Reflectors on All Except TRIAXYS
4. Reflective Tape

Point No.	Description	Latitude*	Longitude*	Equipment
1	Northwest Overall Corner	N44.69782444900	W124.14623042100	None
2	Northeast Overall Corner	N44.69857399700	W124.12288614500	None
3	Southeast Overall Corner	N44.68192375900	W124.12183891000	None
4	Southwest Overall Corner	N44.68117442700	W124.14517645600	None
5	Northwest Site Corner	N44.69654918	W124.12980796	Corner Marker Buoy
6	Northeast Site Corner	N44.69481186	W124.12777619	Corner Marker Buoy
7	Southeast Site Corner	N44.69444426	W124.12518974	Corner Marker Buoy
8	Southwest Site Corner	N44.69430052	W124.12966653	Corner Marker Buoy
9	TriAXYS Buoy	N44.69524106	W124.12844402	TriAXYS Buoy
10	WetNZ Device	N44.69503362	W124.12779014	WetNZ Device
11	Ocean Sentinel Buoy	N44.69573186	W124.12655239	Ocean Sentinel Buoy

* Lambert Conformal Conic NAD83

DESIGNER SEAN MORAN	QA REVIEWED BY STM	TEMPLATE # STANDARD
DIMENSIONS IN INCHES UNLESS OTHERWISE SPECIFIED. LINEAR TOLERANCES ARE: X ±0.1 X.X ±0.03 X.XX ±0.01 X.XXX ±0.003 ANGULAR TOLERANCES ARE: X.X ±0.1 X.XX ±0.05	NORTHWEST NATIONAL MARINE RENEWABLE ENERGY CENTER OREGON STATE UNIVERSITY	
MATERIAL	MOBILE OCEAN TEST BERTH WETNZ NAVIGATIONAL LIGHTING PLAN	
FINISH	SCALE NTS / DRAWN BY STM	DATE 03/05/12
ACAD FILE ..\CONTROLLED DOCUMENTS\ OSU WETNZ NAV LIGHT PLN	Sheet 1 of 1 / SIZE A	DRAWING NUMBER WETNZ2 / REV 00

6: Spill Contingency and Emergency Response Plan

Pursuant to the Spill Prevention, Control and Countermeasure (SPCC) Regulation, facilities subject to the Environmental Protection Agency's (EPA) Oil Pollution Prevention Rule must prepare and implement a plan to prevent discharge of oil into or upon navigable waters of the United States or adjoining shorelines. The proposed project does not meet the criteria requiring a Spill Prevention, Control and Countermeasure (SPCC) plan.[1] In addition, the proposed project does not meet the criteria for substantial harm requiring a Facility Response Plan (See Appendix B for certification.) While the proposed project does not require a SPPC plan, it does involve deploying oil-filled equipment in the Pacific Ocean and the NNMREC requires that WET-NZ device developers provide a Spill Contingency and Emergency Response Plan. NNMREC and NWEI have developed this plan for the proposed project to prevent and, if needed, mitigate spills or leaks of fluids into the marine environment. The implementation of this plan, combined with the use of licensed, insured operators with their own spill response plans, will minimize the potential for spills.

This plan also addresses the major types of emergency conditions that could occur during normal operation and maintenance activities for the proposed project, identifies lines of communication with regulatory agency personnel, and establishes response actions for emergency situations. Implementation of procedures described in this plan should minimize the potential for adverse effects in the event an emergency situation was to occur. It is imperative that detection and evaluation of a system failure that threatens human health and safety and/or the environment be carried out expediently so that the response measures contained in this Plan can be effectively implemented. This information is provided in the Operations & Maintenance Plan.

General Responsibilities

This section describes the general responsibilities of the Ocean Sentinel personnel and public agencies under this plan.

NNREC Responsibilities

NNMREC has the primary responsibility for providing the initial response to all incidents that are not caused directly or indirectly by one of its contractors.

[1] Non-transportation related facilities are only subject to the SPCC rule if they meet the criteria of having an aggregate aboveground storage capacity great than 1,320 gallons or a completely buried storage capacity greater than 42,000 gallons [40 CFR 112].

System Operator

The System Operator is responsible for monitoring the sensor and alarm systems and identifying when a potential unexpected event or system failure has occurred. This responsibility could be taken by various individuals including the Facilities Engineer (FE).

The System Operator is the first point of contact for notification by operations and maintenance personnel, regulatory agencies, and the general public of a potential incident. When notified of the potential for an unexpected event, the System Operator on duty will record the following information:

Upon receiving notice of a potential system failure or unexpected event, the System Operator will begin to call the Response Coordinators on the Notification Flowchart (Figure 1) in the order listed ANY TIME DAY OR NIGHT until contact is made. The System Operator is then responsible for continuing to monitor system operations, informing the Response Coordinator of any change in conditions, and taking other actions as instructed by the notified Response Coordinator.

Response Coordinator

Upon receiving notice of a potential system failure or unexpected event, the Response Coordinator is responsible for verifying that an operations failure has occurred. This assessment should be completed in coordination with the System Operator and any outside agencies who can provide relevant information. The response coordinator is generally the Ocean Test Facilities Manager, but the responsibilities could be assumed by another individual as well.

After making a determination that an operations failure has occurred, the Response Coordinator is responsible for notifying or assigning personnel to notify individuals and the agencies of current conditions in accordance with the Notification Flowchart (Figure 1). In the event of multiple operations failures, the Response Coordinator will prioritize activities based on the level of threat first to human health and safety and then to the environment.

The Response Coordinator is responsible for coordinating appropriate mitigation actions by using the online monitoring system to assess the nature of the event. The Response Coordinator will establish an Incident Command System, which organizes the functions, tasks, and staff within the overall response. The Response Coordinator will act as the Incident Commander in the initial stages of the spill event but under the Oregon Emergency Response System Plan the “first public safety official on the scene” will normally assume control of the site during the “emergency phase” of an incident. The Response Coordinator will ensure that responsible parties are identified for the following five areas:

- Command - setting response objectives and undertaking coordination.
- Operations - undertaking tactical response actions.
- Planning - investigating and establishing technical basis for action plans.
- Logistics - providing equipment and services.
- Finance - managing finances and administration.

The Response Coordinator shall ensure that all NNMREC personnel and contractors work cooperatively with state and federal agencies. To ensure all activities are carried out in an efficient and safe manner, the Response Coordinator is responsible for obtaining information on conditions at the array including existing and forecasted precipitation, storm events, and predicted wind speeds as needed. Key sources of information include:

- Weather Data including 20-minute precipitation, wind direction and wind speed http://www.wunderground.com/history/airport/KOTH/2007/12/28/DailyHistory.html?req_city=Newport&req_state=OR&req_statename=Oregon
- National Weather Service's 1- to 5-day precipitation forecast http://www.hpc.ncep.noaa.gov/qpf/qpf2.shtml
- National Weather Service's Warning Forecasts http://www.nws.noaa.gov/

Contingency

The project components are designed to withstand all ocean conditions that might occur at the project site; however, there is a possibility that an unforeseen event could compromise the mooring system or otherwise create a hazardous situation. If one of the project components were to be displaced out of the deployment area it could pose a navigation hazard, and there could be other problems if it drifted to the shore before it was recovered (e.g., hazard to public safety, damage to shoreline structures or habitat, or spill of hydraulic fluid). The primary water use at risk in the event of a spill is the Pacific Ocean. While this water body is not used as a public drinking water supply, it hosts a variety of commercial and recreational activities. It is highly unlikely that there would be a release of fluid from one of the project components; however, in the event that release did occur, dispersal of the hydraulic fluid could have immediate effects to offshore birds and minor impacts to marine mammals.

In the unlikely event that the hydraulic oil does leak, an alarm will alert the NNMREC Operations Center and the response protocol will be initiated. The Response Coordinator has the authority to commit the necessary resources and equipment to respond to a spill and to request assistance from fire/police departments, professional environmental service providers, and others as necessary. The Response Coordinator will play the central coordinating role in the event of a release by directing personnel, coordinating with professional environmental clean-up contractors, and other outside response agencies, and ensuring the safety of all involved persons. In addition, the incident would be reported on the State of Oregon's Spill/Release Report form (enclosed), and the appropriate agencies would be notified (see sections that follow).

Contaminants could be spilled during facility deployment or operations; as such, the spill location could be anywhere from the Newport harbor, where the devices will be launched, to the project site where they would be deployed. The project site is located approximately 2 miles off the coast of Newport in Lincoln County, Oregon. This facility includes oil-filled equipment onboard the Ocean Sentinel Instrumentation Buoy related to the operation of a backup diesel generator for instrumentation power and hydraulic fluid in the power-take-off unit of the WET-NZ wave energy converter to be tested.

Oil-filled equipment onboard the Ocean Sentinel includes three baffled diesel fuel tanks, motor oil contained within the diesel generator, and a glycol-based coolant used in the diesel generator and power converter heat exchangers. The total volume of diesel fuel tanks onboard is 240 gallons; the sum of three tanks of volumes 75, 75, and 90 gallons. These tanks are located inside buoy compartment #3. Motor oil and coolant in the diesel generator have volumes of less than 5 gallons. The diesel generator and associated coolant system are located inside buoy compartment #4. The power converter has a coolant system for dissipating heat from within the air-tight enclosures and has a volume of well under 5 gallons. The power converter and associated coolant system is located inside buoy compartment #1. The buoy compartments are water tight. If a spill were to occur within these compartments, it would be contained in the bilge for recovery. The bilge has intrusion sensors and is not bilge pumped, so fluids will not escape the buoy unless both an internal component leaks and the hull is ruptured. This is an extremely unlikely event that is not considered to be reasonably foreseeable.

For the WET-NZ device, the volume of hydraulic fluid would be small, not exceeding 90 litres of ELF Elfolna DS hydraulic fluid. Thus, any exposure would likely occur relatively distant from the spill, and the spilled materials would be highly diluted.

Prevention

The Ocean Sentinel Instrumentation buoy and WET-NZ device are designed to minimize the potential for spills. First, the devices are sealed, so there are no readily-accessible entry points to the fluids within the structures. In addition, the devices do not have any external hydraulic components. Prior to installation, a meeting will be held for NNMREC and NWEI staff to discuss discharge prevention and response procedures. The discussion will include maintenance requirements, discharge prevention protocols, and any other relevant precautionary measures.

During the installation and subsequent maintenance of the device, a number of vessels, including tugs, barges, cranes, and workboats will be employed. Vessels will also be employed during maintenance activities. Each of these vessels contains fuel, hydraulic fluid, and potentially other hazardous materials, and therefore, there is a risk of a spill of such materials. All marine construction contractors utilized will be required to be licensed and insured and that have their own spill response plans and equipment on board.

Control

Once the devices are deployed, they will be monitored by systems on-board the Ocean Sentinel instrumentation buoy and the performance data will be transmitted to the NNMREC Operations Center in real time. Personnel at NNMREC will continuously monitor the operating Ocean Sentinel, and may also monitor specific elements of the WEC, through the online monitoring system. Key operating parameters will be monitored, including position, pressures, temperatures, voltages, leak detectors, and other parameters. If there is any disruption in the operation of a device (such as would occur if there was a leak of hydraulic fluid), then it would be detected by the continuous monitoring system. In the

unlikely event a project component breaks free from its mooring, the Automatic Identification System (AIS) transmitters installed on the devices would provide navigation assistance to locating the components, including the Ocean Sentinel Instrumentation Buoy, WET-NZ device, monitoring equipment, and any surface or marker buoys. Also, the devices will be lit at night in accordance with U.S. Coast Guard (USCG) regulations to aid the navigation of mariners. In addition, the perimeter of the project site will have navigation lighting would be sufficient to assist in the discovery of any discharges in the night.

Response

Emergency situations that could occur with the proposed project have been assessed, and response protocols are described below.

Ocean Sentinel or WET-NZ has Moved Outside of the Operational Boundaries

If the Ocean Sentinel or WET-NZ has moved outside of the pre-set boundaries and is still in the water, or if the equipment has become submerged, the Response Coordinator will engage a subcontractor to secure the unit and tow it to a suitable location. A list of pre-screened contractors is provided in this plan. The Response Coordinator will also notify the USCG of the failure and: a) consult with them as to the best course of action; b) request that a navigation notice be posted; c) and obtain any necessary approvals and permits. The Response Coordinator will also contact the National Marine Fisheries Service (NMFS) to apprise them of the situation and responses to date.

If the Ocean Sentinel or WET-NZ has made landfall or it appears that landfall is possible, the Response Coordinator will contact the USFS and the OPRD to consult as to the best course of action. The Response Coordinator will either assign personnel or engage a contractor to provide crowd control and deploy appropriate warning indicators (e.g., fencing, construction tape, warning lighting). NNMREC will also obtain any necessary approvals and/or permits and consult with the agencies as to appropriate level of contact with the media. In addition to NNMREC personnel and/or contractors, the Response Coordinator may request assistance from the USFS, the OPRD, and /or the Oregon State Police and Newport Police Department for crowd control assistance.

The Response Coordinator will attempt to consult with the USFS, OPRD, and USFWS Newport Field Office as to potential impact on snowy plover of the situation. Prior to any vehicles accessing beach locations, the Response Coordinator will consult access descriptions, road maps, maps of snowy plover habitat, and (if within nesting period) specific nest site maps to identify the access pathway that minimizes contact with snowy plover, their habitat and other ecologically-sensitive regions with a particular emphasis on avoiding nesting sites. The Response Coordinator will confirm the proposed route with the USFS, OPRD, and USFWS as available.

If the Ocean Sentinel or WET-NZ has made landfall, the Response Coordinator will engage a subcontractor to determine the best method of removing the equipment. The preferred method will be to float it back out into the ocean, where it can be brought to an appropriate location. If the equipment cannot be floated, then it must be dismantled and removed using flatbed trucks or other suitable

vehicles. The Response Coordinator will attempt to confirm the proposed response and vehicular route with the USFS, OPRD USFWS, and NMFS so as to minimize any snowy plover resource concerns.

Electrical Fault in the Ocean Sentinel or WET-NZ

The most likely cause of this system failure is a defect in the umbilical cable, umbilical connector, or an electrical component. The Response Coordinator will engage a subcontractor to identify and correct the problem once weather conditions permit.

Fluid has Leaked Outside of the Ocean Sentinel or WET-NZ

If there is evidence that fluid has leaked out of the equipment, the Response Coordinator will follow the protocols established in this plan. Contractors will be alerted to watch for sheens on the water or other signs that an oil leak has occurred. A Materials Safety Data Sheet (MSDS) for the materials in the Ocean Sentinel is included at the end of this plan. While these protocols will be utilized to direct mitigation actions, the primary elements include:

- Stop spill or leak if possible and contain spilled materials;
- Contact the U.S. Coast Guard, Oregon Emergency Response System (OERS) Spill Reporting Hotline, and the National Response Center; and
- Engage a professional environmental firm to assist with cleanup operations as necessary.

Navigational Lighting Failure

The most likely cause of this system failure is either an electrical failure or structural damage. The Response Coordinator first utilize the online monitoring system in an attempt to identify the cause of the failure, then will engage a subcontractor to inspect and repair the instrument once weather conditions permit. The Response Coordinator will also notify the USCG of the failure and consult with them as to the best course of action.

Umbilical Cable Failure

The most likely cause of this system failure is a storm or other extreme environmental condition. An impact or critical separation of the WET-NZ from the Ocean Sentinel could break away the connections of the umbilical cable. The Response Coordinator will notify the USFS, the OPRD, and the USCG of the situation and consult as to the best course of action. The Response Coordinator will either assign personnel or engage a contractor to provide crowd control and deploy appropriate warning indicators (e.g., fencing, construction tape, warning lighting). In addition to NNMREC personnel and/or contractors, the Response Coordinator may request assistance from the USFS, the OPRD, and /or the Oregon State and Reedsport Police Departments for crowd control assistance.

Buoyancy Failure of Ocean Sentinel, WET-NZ or other Equipment

In the unlikely event of a vessel impact or other event that could cause Ocean Sentinel or WET-NZ equipment to lose buoyancy, the Response Coordinator will engage a subcontractor to inspect and either repair or remove the instrument once weather conditions permit. Contractors will be alerted to watch for sheens on the water or other signs that an oil leak has occurred. The Response Coordinator will also notify the USCG of the failure and consult with them as to the best course of action.

Once the incipient situation has been abated, the Response Coordinator will supervise the completion of the response action. This activity includes, at a minimum, the following:

- Ensure that operations and equipment are restored to previous status;
- Notify any regulatory agencies contacted that the situation has been corrected; and
- Prepare incident investigation report.

Ocean Shores (Sandy Beaches) Buoy Salvage Response Plan

Response/Recovery Assessment: Contact Oregon Parks and Recreation Department, Coastal Land Use Coordinators or Park Managers to conduct assessment of buoy location, damage and recovery options. Salvage response is likely to be jointly managed by the owner, salvor and affected agencies depending on the location and circumstances. Salvage resources include the necessary people and equipment that could evaluate and recommend appropriate salvage strategies. After the assessment, coordination of the appropriate agencies will be conducted to ensure a safe and efficient recovery effort. The goal for recovery of a buoy would be to have the capability of bringing salvage and recovery resources on-scene within 24 hours.

Removal/Transport off Ocean Shore

Specific requirements are not described as every salvage response is unique, due to the differences in accessing sandy shore landing areas, removal areas, current and forecasted tidal and ocean conditions, protection of marine or upland habitat and wildlife, other environmental concerns and variables. Generally, most sandy beaches are accessible for personnel, vehicles and heavy equipment using existing beach access roads. In certain circumstances, trails and/or roads may be improved to facilitate beach access. Heavy equipment required will depend on the specific location of the buoy, tidal and weather conditions and equipment available. Contractor(s) selected will have experience with towing and lifting of heavy objects, are familiar with salvage and recovery operations in areas of diverse topography and variable and extreme weather conditions. While the equipment is en-route, a thorough investigation of the shoreline from both a shoreline and water perspective will be conducted in order to assess the condition of the buoy generator as well as identify the area of concern. Track- Hoe excavators are generally used for construction activities on the ocean shore because of their ability to navigate over soft sand and uneven surfaces. All heavy equipment used for recovery of the unit and/or its associated debris will using best management practices. Once the prescribed equipment has removed the larger pieces of the unit, a survey team will then search the recovery area for smaller debris.

Response During Periods of Darkness

The ocean test facility will be lit at night in accordance with USCG regulations, as shown in the Navigational Lighting Plan for each deployment. This lighting is yellow, with specific flashing characteristics and visibility ratings. There will be four corner marker buoys that will have lighting as well as reflective tape and radar reflectors. Operating and maintenance personnel would utilize vessel and portable hand-held floodlights to illuminate any unlit or poorly lit areas of the site if required.

Response During Weekends and Holidays

The same procedures of operation and monitoring of the facilities, as discussed in the Operations and Maintenance Plan, are performed by the Site Supervisor every day, including weekends and holidays. Therefore, the response time during weekends and holidays would be the same as normal weekdays. The Response Coordinator can be contacted by telephone during non-working hours, including weekends and holidays.

Response During Periods of Adverse Weather

In adverse conditions, the Site Supervisor would monitor the system operations through the online monitoring system. Operators will remotely check the position of the units during and after storm events, as this would be the most likely time for the mooring system to fail.

Alternate Systems of Communication

The communications network between the Site Supervisor and Response Coordinators consists of landline telephones, cellular telephones, and pagers.

Approaching Array if Pinniped is Hauled Out on Equipment

The current NMFS guideline for vessel approach of pinnipeds (sea lions and seals) hauled out is 100 yards. This topic is covered in more detail in the Adaptive Management Plan.

AGENCY NOTIFICATION

1. The Response Coordinator contacted by the System Operator or an individual identified by management will make the required contacts with the regulatory and emergency response agencies. The Oregon Department of Environmental Quality defines a reportable quantity of oil as being: a) If spilled into waters of the state, or escape into waters of the state is likely, any quantity of oil that would produce a visible oily slick, oily solids, or coat aquatic life, habitat or property with oil, but excluding normal discharges from properly operating marine engines; or b) if spilled on land, any quantity of oil over 42 gallons (one barrel).

2. The Environmental Protection Agency defines a reportable quantity as such quantities that the Administrator has determined may be harmful to the public health or welfare or the environment of the U.S. include discharges of oil that: (a) violate applicable water quality standards; or (b) cause a film or sheen upon or discoloration of the surface of the water or adjoining shorelines or cause a sludge or emulsion to be deposited beneath the surface of the water or upon adjoining shorelines.

3. If a reportable quantity of oil/hydraulic fluid (as defined by the State of Oregon) is spilled into the Pacific Ocean, the Response Coordinator or a designated person will notify the Oregon Department of Environmental Quality through the Oregon Emergency Response System (OERS) 24-hour oil spill reporting hotline at 1-800-452-0311 (in-state) or 1-503-378-4124 (out-of-state) as soon as possible but within two hours. The following information will be required when reporting the spill:

a. Your name, title, and phone number.

b. Type of incident and the materials involved.

c. Location/time of incident.

d. Background/how the incident occurred.

e. On-scene contact and how to reach them.

f. Severity of incident - threat to people, property, or the environment.

g. Actions taken - containment, evacuation.

h. Responsible party and telephone number. The Response Coordinator or a designated person shall obtain the name of the individual taking the call and the incident reporting number.

Incident Review

After a system failure situation has been abated, the Response Coordinator will complete an Incident Investigation Report. This document will include, at a minimum, the following:

- Description of events leading to the incident and subsequent actions. Reports should include the following information:
- Date, time, and nature of incident
- Name(s) of personnel involved
- Names of external entities contacted (e.g., service providers, regulatory agencies)
- Description of response actions performed
- Evaluation of effectiveness of response actions
- Proposed methods of prevention of future emergencies

<u>Review of efficiency and effectiveness of response operations.</u>

Recommendations can be made to improve either the response effort or safety controls so as to prevent the incident from reoccurring in the future. Regulatory agencies will be consulted as appropriate during this review process, to gauge their assessment of how the system failure was addressed.

The Incident Investigation Report will be reviewed with management and kept on file at the NNMREC office. Additional copies will be provided to involved agencies as requested.

Contact Information

Facility Contact Information:

Northwest National Marine Renewable Energy Center
Oregon State University
Batcheller 350
Corvallis, OR 97330

Meleah Ashford
Program Manager
(541) 737-6138
meleah.ashford@oregonstate.edu

Sean Moran, PE, MS, MBA
Manager of Ocean Test Facilities
(541) 737-5315
sean.moran@oregonstate.edu

WET-NZ Contact:

Justin Klure, Northwest Energy Innovations, LLC
(503) 475-2999
jklure@peventuresllc.com

Insurance Company:

Oregon State University (self insured, state agency)
($500,000 of general liability, $100,000 of replacement costs)
Office of Risk Management
644 SW 13th Street
Corvallis, OR 97333
Phone: 541-737-7252

Federal, State, and Local Agencies

The Response Coordinator or a designated individual will notify federal, state, and local agencies in accordance with the Notification Flowchart (Figure 1). Agency responses may include, but are not limited to, those outlined below.

Lincoln County Public Works
541-265-5747
541-265-4231 (24 hour)

City of Newport Public Works
541-574-0603

City of Lincoln City Public Works
541-996-2154

Oregon Parks and Recreation Department (OPRD)

Tony Stein, Coastal Land Use Coordinator (North Coast, Yachats to Washington Border)
401 SW 9th Street
Newport, OR 97365
541-265-9871 (phone)
541-270-3226 (cell)
541-265-9157 (fax)

Calum Stevenson, Coastal Land Use Coordinator (South Coast, Yachats to California Border)
89814 Cape Arago Highway
Coos Bay, OR 97420
541-888-9324 (phone)
541-252-7030 (cell)
541-888-5650 (fax)

Oregon Department of Fish and Wildlife (ODFW)
3406 Cherry Avenue N.E.
Salem, OR 97303
541-947-6000 or 800-720-ODFW [6339]

Oregon State Police
Sergeant Todd Thompson
52 NE 73rd Street
Newport, OR 97365
541-265-5354

U.S. Coast Guard *(As appropriate, the U.S. Coast Guard will issue a "Notice to Mariners")*
Timothy L. Westcott
13th Coast Guard District
Prevention Division (dp)
Waterways Management Branch (dpw)
Federal ATON Damage Claim Manager
Private Aids to Navigation Manager
Seattle, Washington
206-220-7285

U.S. Army Corps of Engineers (USACE)
Jaimee W. Hammit, CPSSc
Regulatory Project Manager
Portland District P.O. Box 2946
Portland, OR 97208-2946
503-808-4390

Local Contractor Contacts

(*These are local Track Hoe Equipment Operators; there may be Heavy Equipment Vehicles that have cranes that are capable of driving on soft sandy beaches, or steep, uneven roads and/or rocky surfaces.)*

Bob McEwan Construction, Inc. (Astoria/Seaside/Cannon Beach Area)
P.O. Box 2845
Gearhart, Or 97138-2845
PHONE: (503) 738-5954

Mohler Sand and Gravel (Manzanita, Nehalem, Rockaway, Tillamook Area)
20890 Foss Rd
Nehalem, OR 97131
PHONE: (503) 368-5157

Dan Kauffman Excavating, Inc. (Neskowin, Lincoln City Area)
2140 A N.E. Hwy 101
Lincoln City, OR 97367
PHONE: (541) 994-8584

Devil's Lake Rock Company (Neskowin, Lincoln City Area)
2300 SE Hwy 101
Lincoln City, OR 97367
PHONE: (541) 9943641

Road and Driveway Co. (Newport Area)
Harney Street, Newport 97365
PHONE: (541) 265-9441

Western Environmental Construction Corporation (Waldport, Yachats Area)
P.O. Box 789
Yachats, OR 97498
PHONE: (541) 547-3003

George Dollowitch, (Waldport, Yachats Area)
PHONE: (541) 547-3592

Notification Flow Chart

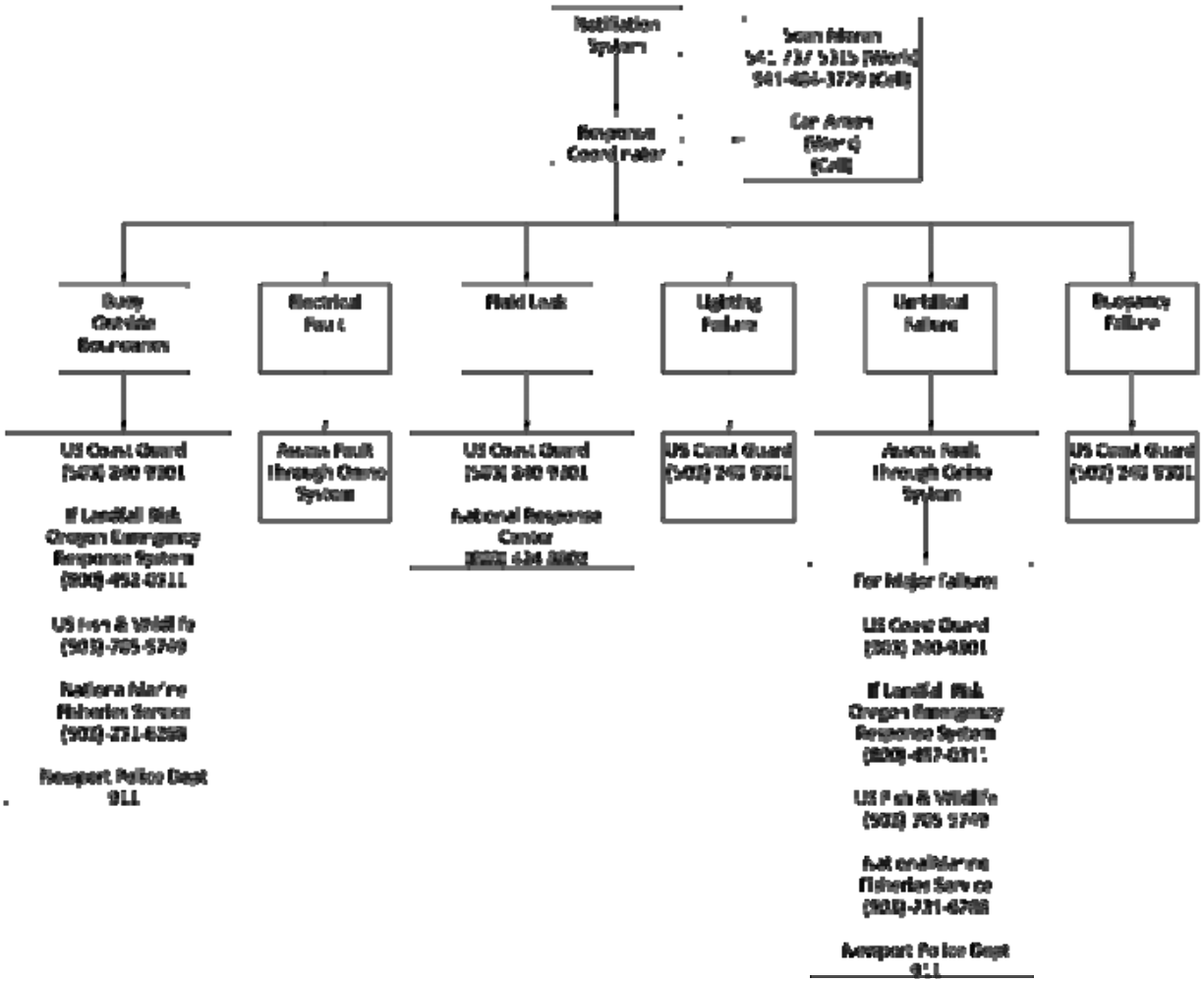

Substantial Harm Criteria Certification

1. Does the facility transfer oil over water to or from vessels and does the facility have a total oil storage capacity greater than or equal to 42,000 gallons?

Yes ____ No__X__

2. Does the facility have a total storage capacity greater than or equal to 1 million gallons and does the facility lack secondary containment that is sufficiently large to contain the capacity of the largest aboveground oil storage tank plus sufficient freeboard to allow for precipitation within any aboveground oil storage tank area?

Yes ____ No__X__

3. Does the facility have a total oil storage capacity greater than or equal to 1 million gallons and is the facility located at a distance such that a discharge from the facility could cause injury to fish and wildlife and sensitive environments?

Yes ____ No__X__

4. Does the facility have a total oil storage capacity greater than or equal to 1 million gallons and is the facility located at a distance such that a discharge from the facility would shut down a public drinking water intake?

Yes ____ No__X__

5. Does the facility have a total oil storage capacity greater than or equal to 1 million gallons and has the facility experienced a reportable oil spill in an amount greater than or equal to 10,000 gallons within the last five years?

Yes ____ No__X__

Certification

I certify under penalty of law that I have personally examined and am familiar with the information submitted in this document, and that based on my inquiry of those individuals responsible for obtaining this information, I believe that the submitted information is true, accurate, and complete.

Signature: BA Batten

Name: BELINDA BATTEN

Title: DIRECTOR, NORTHWEST NATIONAL MARINE RENEWABLE ENERGY CENTER

Date: 3/20/12

Appendix C: State of Oregon Environmental Spill Report Form

SPILL/RELEASE REPORT

State of Oregon Department of Environmental Quality

OERS No. _____

a. Company/Individual Name: _____

b. Address: _____

_____

c. Company Contact Person: _____

d. Phone Number(s): _____

e. Specific on-site location of the release (and address if different from above):

_____

_____

_____

Please provide a map of the site showing area(s) where the release occurred, any sample collection locations, location of roads/ditches/surface water bodies, etc.

2 - RELEASE INFORMATION

a. Date/Time Release started:_____ Date/Time stopped:_____

b. Release was reported to (specify Date/Time/Name of Person contacted where applicable):

ODEQ _____

OERS _____

NRC _____

Other (describe):_____

c. Person(s) reporting release:_____

d. Name, quantity and physical state (gas, liquid, solid or semi-solid) of material(s) released:

_____

_____

Please attach copies of material safety data sheets (MSDS) or constituent profiles for released material(s).

e. The release affected: ____Air ____Groundwater ____Surface Water ____Soil ____Sediment

f. Name and distance to nearest surface water body(s), even if unaffected (include locations of creeks, streams, rivers and ditches that discharge to surface water on maps):

_____

_____

_____

Has the release reached the surface water identified above?: ____Yes ____No

Could the release potentially reach the surface water identified above? ____Yes ____No

Explain:_____

_____

g. Depth to nearest aquifer/groundwater:_____

Is nearest aquifer/groundwater potable (drinkable)? ____Yes ____No

Has the release reached the nearest aquifer/groundwater? ____Yes ____No
Explain:_____

_____

h. Release or potential release to the air occurred? ____Yes ____No

Explain:_____
_____

i. Was there a threat to public safety? ____Yes ____No

j. Is there potential for future releases? ____Yes ____No

Explain:_____
_____

k. Describe other effects/impacts from release (emergency evacuation, fish kills, etc.):
_____
_____
_____

l. Describe how the release occurred. Include details such as the release source, cause, contributing weather factors, activities occurring prior to or during the release, dates and times of various activities, first responders involved in containment activities, etc.:

_____
_____
_____
_____
_____
_____
_____
_____
_____
_____
_____
_____
_____
_____
_____

3 - SITE INFORMATION

a. Adjacent land uses include (check all that apply and depict on site maps):

____Residential ____Commercial ____Light Industrial ____Heavy Industrial

____Agricultural ____Other (describe):_____

b. What is the population density surrounding the site:_____

c. Is the site and/or release area secured by fencing or other means? ____Yes ____No

d. Soil types (check all that apply): ____alluvial ____ bedrock ____ clay ____sandy ____silt ____ silty loam ____artificial surface (cement/asphalt/etc.)

e. Describe site topography:_____

_____
_____
_____
_____

4 - CLEANUP INFORMATION

a. Was site cleanup performed? ____Yes ____No

If No, explain:_____

_____

b. Who performed the site cleanup?

Company Name: _____

Address: _____

_____

Cleanup Supervisor: _____

Phone Number(s): _____

c. Has all contamination been removed from the site? ____Yes ____No

If No, explain:_____

_____

_____

d. Estimated volume of contaminated soil removed:_____

e. Estimated volume of contaminated soil left in place:_____

f. Was a hazardous waste determination made for cleanup materials? ____Yes ____No

g. Based on the determination, are the cleanup materials hazardous wastes? ____Yes ____No

If Yes, list all waste codes:_____

h. Was contaminated soil or water disposed of at an off-site location? ____Yes ____No

If yes, attach copies of receipts/manifests/etc., and provide the following information:

Facility Name: _____

Address: _____

_____

Facility Contact: _____

Phone Number(s): _____

i. Is contaminated soil or water being stored and/or treated on-site? ____Yes ____No

If yes, please describe the material(s), storage and/or treatment area, and methods utilized (attach additional sheets if necessary):

_____
_____
_____
_____

j. Describe cleanup activities including what actions were taken, dates and times actions were initiated and completed, volumes of contaminated materials that were removed, etc. (attach additional sheets or contractor reports if necessary or more convenient):

_____
_____
_____
_____
_____

5 - SAMPLING INFORMATION

Attach copies of all sample data and indicate locations of sample collection on maps.

a. Were samples of contaminated soil collected? ____Yes ____No ____N/A

b. Were samples of contaminated water collected? ____Yes ____No ____N/A

c. Were samples collected to show that all contamination had been removed? ____Yes ____No ____N/A

d. Describe sampling activities, results and discuss rationale for sampling methods:

_____
_____
_____
_____
_____
_____
_____
_____

6 - ADDITIONAL INFORMATION

a. Provide a description or plan outlining the list of actions to be taken to prevent future releases from occurring. _____
_____

_____
_____

7 - SPILL REPORT CHECKLIST

To ensure that you have gathered all the information requested by the Department in this Spill/Release Report, please complete the following checklist:

____ Map(s), pre and post cleanup photos of the site showing buildings, roads, surface water bodies, ditches, waterways, point of the release, extent of contamination, areas of excavation and sample collection locations attached.

____ Material Safety Data Sheet (MSDS), or constituent profiles for released material(s) attached. **Note: an MSDS is not required for motor fuels.**

____ Sampling data/analytical results attached.

____ Receipts/manifests (if any) for disposal of cleanup materials attached.

____ Contractor reports (if any) attached.

If you would like to submit your report by e-mail it can be submitted electronically to: DOSPILLS@deq.state.or.us

MATERIAL SAFETY DATA SHEET

I. PRODUCT IDENTIFICATION

MANUFACTURER GNB Industrial Power A Division of Exide Technologies 3950 Sussex Avenue Aurora, IL 60504-7932	CHEMICAL/TRADE NAME (as used on label)	Valve regulated lead acid absorbed glass mat blocs with ♲ Pb Element M83 blocs Element M90 Pallet Pro Sunlyte 12-5000X with date code containing ELE27/PV5000
FOR INFORMATION Primary: MACTEC Engineering and Consulting, Inc. Attention: DeLyn Thompson (770) 421-3364 Secondary: Environmental, Safety & Health Attention: Fred Ganster (610) 921-4052	CHEMICAL FAMILY/ CLASSIFICATION DATE ISSUED:	Electric Storage Battery February 1, 2008
FOR EMERGENCY CHEMTREC (800) 424-9300 24-hour Emergency Response Contact Ask for Environmental Coordinator	CHEMTREC INTERNATIONAL	(703) 527-3887 – Collect

II. HAZARDOUS INGREDIENTS/IDENTITY INFORMATION

			Approximate Air Exposure Limits (µg/m^3)		
Components	CAS Number	% by Wt.	OSHA	ACGIH	NIOSH
Inorganic components of:					
Lead	7439-92-1	65-70	50	50	50
Antimony	7440-36-0	< 0.1	500	500	500
Tin	N/A	< 1	2000	2000	2000
Electrolyte (sulfuric acid)	7664-93-9	19-21	1000	200	1000
Case Material:					
Polypropylene	9003-07-0	6-7	N/A	N/A	N/A
Talc (Non-Asbestos Type)	14807-96-6	< 1	20 mppcf	2000	2000
Separator Material					
Glass	N/A	2-3	N/A	N/A	N/A

* Respirable fraction
‡ Any substance that NIOSH considers to be a potential occupational carcinogen is designated by the notation "Ca."
NOTE: Inorganic lead and electrolyte (water and sulfuric acid solution) are the primary components of every battery manufactured by Exide Technologies or its subsidiaries. Other ingredients may be present dependent upon battery type. Polypropylene is the principal case material of automotive and commercial batteries.

III. PHYSICAL DATA

Boiling Point (Electrolyte)	203° F (at 760 mm Hg)	Specific Gravity (H_20=1)	1.230 to 1.350
Melting Point	Not Applicable	Vapor Pressure (mm Hg at 20 °C)	10
Solubility in Water	100%		
Evaporation Rate (Butyl acetate=1)	Less Than 1	Vapor Density (AIR=1)	Greater than 1
Appearance and Odor	A clear liquid with a sharp, penetrating, pungent odor. A battery is a manufactured article; no apparent odor.	% Volatiles by Weight	Not Applicable

ANY PHOTOCOPY MUST BE OF THIS ENTIRE DOCUMENT

IV. FIRE AND EXPLOSION HAZARD DATA

Flash Point: Not Applicable

Flammable Limits: LEL = 4.1% (Hydrogen Gas in air) ; UEL = 74.2%

Extinguishing media: CO_2; foam; dry chemical

Special Fire Fighting Procedures:

Use positive pressure, self-contained breathing apparatus. Beware of acid splatter during water application and wear acid-resistant clothing, gloves, face and eye protection. If batteries are on charge, shut off power to the charging equipment, but, note that strings of series connected batteries may still pose risk of electric shock even when charging equipment is shut down.

Unusual Fire and Explosion Hazards:

In operation, or when on charge, batteries generate hydrogen and oxygen gases (hydrogen is highly flammable and oxygen supports combustion). They must always be assumed to contain these gases which, if ignited by burning cigarette, naked flame or spark, may cause battery explosion with dispersion of casing fragments and corrosive liquid electrolyte. Carefully follow manufacturer's instructions for installation and service. Keep away all sources of gas ignition, ensure that adequate ventilation is provided, and do not allow metallic articles to simultaneously contact the negative and positive terminals of a battery.

V. REACTIVITY DATA

Stability: Stable _X_ Unstable ___

Conditions to Avoid: Prolonged overcharging and overheating current; sparks and other sources of ignition.

Incompatibility: (materials to avoid)

Electrolyte: Contact with combustibles and organic materials may cause fire and explosion. Also reacts violently with strong reducing agents, most metals, carbides, chlorates, nitrates, picrate, sulfur trioxide gas, strong oxidizers, and water. Contact with metals may produce toxic sulfur dioxide fumes and may release flammable hydrogen gas.

Lead compounds: Avoid contact with strong acids, bases, halides, halogenates, potassium nitrate, permanganate, peroxides, nascent hydrogen, potassium, carbides, sulfides, phosphorus, sulfur, and reducing agents.

Hazardous Decomposition Products:

Electrolyte: Sulfur trioxide, carbon monoxide, sulfuric acid mist, sulfur dioxide, hydrogen sulfide, hydrogen.

Lead compounds: Temperatures above the melting point are likely to produce toxic metal fume, vapor, or dust; contact with strong acid or base or presence of nascent hydrogen may generate highly toxic arsine gas.

Hazardous polymerization: May Occur _____ Will Not Occur _X_

VI. HEALTH HAZARD DATA

Routes of Entry:

Electrolyte: Harmful by all routes of entry. Under normal conditions of use, sulfuric acid vapors and mist are not generated. Sulfuric acid vapors and mist may be generated when product is overheated, oxidized, or otherwise processed or damaged.
Lead compounds: Under normal conditions of use, lead dust, vapors, and fumes are not generated. Hazardous exposure can occur only when product is heated above the melting point, oxidized or otherwise processed or damaged to create dust, vapor, or fume.

Inhalation:

Electrolyte: Breathing of sulfuric acid vapors or mists may cause severe respiratory irritation.
Lead compounds: Inhalation of lead dust or fumes may cause irritation of upper respiratory tract and lungs.

Ingestion:

Electrolyte: May cause severe irritation of mouth, throat, esophagus, and stomach.
Lead compounds: Acute ingestion may cause abdominal pain, nausea, vomiting, diarrhea, and severe cramping. This may lead rapidly to systemic toxicity. Acute ingestion should be treated by physician.

Skin Contact/Skin Absorption

Electrolyte: Severe irritation, burns, and ulceration. Sulfuric acid is not readily absorbed through the skin.
Lead compounds: Not readily absorbed through the skin.

Eye Contact:

Electrolyte: Severe irritation, burns, cornea damage, blindness.
Lead compounds: May cause eye irritation.

ANY PHOTOCOPY MUST BE OF THIS ENTIRE DOCUMENT

VI. HEALTH HAZARD DATA (CONTINUED)

Effects of Overexposure - Acute:

Electrolyte: Severe skin irritation, burns, damage to cornea may cause blindness, upper respiratory irritation.
Lead compounds: Headache, fatigue, abdominal pain, loss of appetite, nausea, vomiting, diarrhea, muscular aches and weakness, sleep disturbances, and irritability.

Effects of Overexposure - Chronic:

Electrolyte: Possible erosion of tooth enamel; inflammation of nose, throat, and bronchial tubes, and scarring of the cornea.

Lead compounds: Anemia; neuropathy, particularly of the motor nerves, with wrist drop; kidney damage; reproductive changes in both males and females.

Carcinogenicity:

Electrolyte: The National Toxicology Program (NTP) and the International Agency for Research on Cancer (IARC) have classified "strong inorganic acid mist containing sulfuric acid" as a substance that is carcinogenic to humans. This classification does not apply to sulfuric acid solutions in static liquid state or to electrolyte in batteries. Batteries subjected to abusive charging at excessively high currents for prolonged periods of time without vent caps in place may create a surrounding atmosphere of the offensive strong inorganic acid mist containing sulfuric acid.

Lead compounds: Listed as a 2B carcinogen, likely in animals at extreme doses. Proof of carcinogenicity in humans is lacking at present.

Medical Conditions Generally Aggravated by Exposure:

Overexposure to sulfuric acid mist may cause lung damage and aggravate pulmonary conditions. Contact of electrolyte (water and sulfuric acid solution) with skin may aggravate skin diseases such as eczema and contact dermatitis. Contact of electrolyte (water and sulfuric acid solution) with eyes may damage cornea and/or cause blindness. Lead and its compounds can aggravate some forms of kidney, liver, and neurologic diseases.

Emergency and First Aid Procedures:

Inhalation:

Electrolyte: Remove to fresh air immediately. If breathing is difficult, give oxygen.
Lead compounds: Remove from exposure, gargle, wash nose, eyes and lips; consult physician.

Ingestion:

Electrolyte: Give large quantities of water; **do not** induce vomiting; consult physician.
Lead compounds: Consult physician immediately.

Skin:

Electrolyte: Flush with large amounts of water for at least 15 minutes; remove contaminated clothing completely, including shoes, and do not wear again until cleaned. If acid is splashed on shoes, remove and discard if they contain leather.
Lead compounds: Wash immediately with soap and water. Lead compounds are not readily absorbed through the skin.

Eyes: Electrolyte and Lead compounds: Flush immediately with large amounts of water for at least 15 minutes; consult physician immediately.

VII. PRECAUTIONS FOR SAFE HANDLING AND USE

Handling and Storage:

Store batteries under roof in cool, dry, well-ventilated areas that are separated from incompatible materials and from activities which may create flames, sparks, or heat. Keep away from metallic objects that could bridge the terminals on a battery and create a dangerous short-circuit. Single batteries pose no risk of electric shock but there may be increasing risk of electric shock from strings of connected batteries exceeding three 12-volt units.

Charging:

There is a possible risk of electric shock from charging equipment and from strings of series connected batteries, whether or not being charged. Shut-off power to chargers whenever not in use and before detachment of any circuit connections. Batteries being charged will generate and release flammable hydrogen gas. Charging space should be ventilated. Keep battery vent caps in position. Prohibit smoking and avoid creation of flames and sparks nearby. Wear face and eye protection when near batteries being charged.

Spill or Leak Procedures:

Remove combustible materials and all sources of ignition. Stop flow of material and contain spill by diking with soda ash, etc. Carefully neutralize spill with soda ash, etc. Make certain mixture is neutral then collect residue and place in a drum or other suitable container with a label specifying "contains hazardous waste" or (if uncertain call distributor regarding proper labeling procedures). Dispose of as hazardous waste. If battery is leaking, place battery in a heavy duty plastic bag. Wear acid resistant boots, face shield, chemical splash goggles and acid resistant gloves. DO NOT RELEASE UNNEUTRALIZED ACID.

ANY PHOTOCOPY MUST BE OF THIS ENTIRE DOCUMENT

VII. PRECAUTIONS FOR SAFE HANDLING AND USE (CONTINUED)

Waste Disposal Methods:

Sulfuric Acid: Neutralize as described above for a spill, collect residue and place in a container labeled as containing hazardous waste. Dispose of as a hazardous waste. If uncertain about labeling procedures, call your local battery distributor or listed contact. DO NOT FLUSH LEAD CONTAMINATED ACID TO SEWER.

Spent batteries: Send to secondary lead smelter for recycling following applicable federal, state, and local regulations.

Precautionary Labeling:

POISON - CAUSES SEVERE BURNS
DANGER - EXPLOSIVE GASES
CORROSIVE - CONTAINS SULFURIC ACID
KEEP AWAY FROM CHILDREN

VIII. CONTROL MEASURES

Engineering Controls and Work Practices:

Store and handle in well-ventilated area. If mechanical ventilation is used, components must be acid-resistant.
Handle batteries cautiously. Make certain vent caps are on securely. If battery case is damaged, avoid bodily contact with internal components. Wear protective clothing, eye and face protection, when charging or handling batteries. Follow all manufacturers' recommendations when stacking or palletizing. Do not allow metallic materials to simultaneously contact both the positive and negative terminals of the batteries. Use a battery carrier to lift a battery or place hands at opposite corners to avoid spilling acid through the vents. Avoid contact with internal components of the batteries.

Hygiene Practices:

Wash hands thoroughly before eating, drinking or smoking after handling batteries.

Respiratory Protection:

None required under normal conditions. If an overcharging or overheating condition exists and concentrations of sulfuric acid mist are known or suspected to exceed PEL, use NIOSH or MSHA-approved respiratory protection.

Protective Clothing:

None required under normal conditions. If battery case is damaged, use rubber or plastic acid-resistant gloves with elbow-length gauntlet, and acid-resistant apron, clothing, and boots.

Eye Protection:

None required under normal conditions. If battery case is damaged, chemical goggles or face shield.

Emergency Flushing:

In areas where water and sulfuric acid solutions are handled in concentrations greater than 1%, emergency eyewash stations and showers should be provided, with unlimited water supply.

IX. OTHER REGULATORY INFORMATION

NFPA Hazard Rating for sulfuric acid:

Flammability (Red) = 0 Health (Blue) = 3 Reactivity (Yellow) = 2
Sulfuric acid is water-reactive if concentrated.

TRANSPORTATION:

US DOT identification and description for this battery is:
Batteries, wet, non-spillable, 8, UN 2800, PG III
Label: Corrosive
(Exceptions 173.159, paragraph (d), C.F.R. 49)
For air shipments, see International Air Transportation Association (IATA) Dangerous Goods Regulations Manual, special provisions A-48 and A-67. For ocean shipments, reference International Maritime Dangerous Goods Code, P. 8121.

This is to certify that the "Non-Spillable" batteries are capable of withstanding the Vibration and Pressure Differential Test, and at a temperature of 55°C, the electrolyte will not flow from a ruptured or cracked case. The batteries have been protected against short circuits and securely packaged. The batteries and outer packaging must be plainly marked "Non-Spillable" or "Non-Spillable Battery".

RCRA: Spent lead-acid batteries are not regulated as hazardous waste when recycled. Spilled sulfuric acid is a characteristic hazardous waste; EPA hazardous waste number D002 (corrosivity).

ANY PHOTOCOPY MUST BE OF THIS ENTIRE DOCUMENT

IX. OTHER REGULATORY INFORMATION (CONTINUED)

CERCLA (Superfund) and EPCRA:

(a) Reportable Quantity (RQ) for spilled 100% sulfuric acid under CERCLA (Superfund) and EPCRA (Emergency Planning and Community Right to Know Act) is **1,000 lbs.** State and local reportable quantities for spilled sulfuric acid may vary.

(b) Sulfuric acid is a listed "Extremely Hazardous Substance" under EPCRA, with a Threshold Planning Quantity (TPQ) of **1,000 lbs**

(c) EPCRA Section 302 notification is required if **1,000 lbs** or more of sulfuric acid is present at one site. An average automotive/commercial battery contains approximately 5 lbs of sulfuric acid. Contact your Exide representative for additional information.

(d) EPCRA Section 312 Tier Two reporting is required for non-automotive batteries if sulfuric acid is present in quantities of **500 lbs** or more and/or if lead is present in quantities of 10,000 lbs or more.

(e) **Supplier Notification:**
This product contains a toxic chemical or chemicals subject to the reporting requirements of section 313 of (Title) III of the Superfund Amendments and Reauthorization Act of 1986 and 40 CFR Part 372.

Chemical	CAS	Percent by Weight
Lead (Pb)	7439-92-1	65-70
Electrolyte: Sulfuric Acid (H_2SO_4)	7664-93-9	22-23

If you distribute this product to other manufacturers in SIC Codes 20 through 39, this information must be provided with the first shipment of each calendar year.
Note: The Section 313 supplier notification requirement does not apply to batteries that are "consumer products".

CAA: Exide Technologies supports preventative actions concerning ozone depletion in the atmosphere due to emissions of CFC's and other ozone depleting chemicals (ODC's), defined by the USEPA as Class I substances. Pursuant to Section 611 of the Clean Air Act Amendments (CAAA) of 1990, finalized on January 19, 1993, Exide established a policy to eliminate the use of Class I ODC's prior to the May 15, 1993 deadline.

TSCA: Each ingredient chemical listed in Section II of this MSDS is also listed on the TSCA Registry.

CANADIAN REGULATIONS: All chemical substances in this product are listed on the CEPA DSL/NDSL or are exempt from list requirements.

CALIFORNIA PROPOSITION 65:

"WARNING: This product contains lead, a chemical known to the State of California to cause cancer, or birth defects or other reproductive harm."

PREPARED BY:

GNB INDUSTRIAL POWER
A DIVISION OF EXIDE TECHNOLOGIES
3950 SUSSEX AVENUE
AURORA, IL 60504-7932
(800) 872–0471

VENDEE AND THIRD PERSONS ASSUME THE RISK OF INJURY PROXIMATELY CAUSED BY THE MATERIAL IF REASONABLE SAFETY PROCEDURES ARE NOT FOLLOWED AS PROVIDED FOR IN THE DATA SHEET, AND VENDOR SHALL NOT BE LIABLE FOR INJURY TO VENDEE OR THIRD PERSONS PROXIMATELY CAUSED BY ABNORMAL USE OF THE MATERIAL EVEN IF REASONABLE PROCEDURES ARE FOLLOWED.

ALL PERSONS USING THIS PRODUCT, ALL PERSONS WORKING IN AN AREA WHERE THIS PRODUCT IS USED, AND ALL PERSONS HANDLING THIS PRODUCT SHOULD BE FAMILIAR WITH THE CONTENTS OF THIS DATA SHEET. THIS INFORMATION SHOULD BE EFFECTIVELY COMMUNICATED TO EMPLOYEES AND OTHERS WHO MIGHT COME IN CONTACT WITH THE PRODUCT.

WHILE THE INFORMATION ACCUMULATED AND SET FORTH HEREIN IS BELIEVED TO BE ACCURATE AS OF THE DATE HEREOF, EXIDE TECHNOLOGIES MAKES NO WARRANTY WITH RESPECT THERETO AND DISCLAIMS ALL LIABILITY FROM RELIANCE THEREON. RECIPIENTS ARE ADVISED TO CONFIRM IN ADVANCE OF NEED THAT THE INFORMATION IS CURRENT, APPLICABLE, AND SUITABLE FOR THEIR PARTICULAR CIRCUMSTANCES.

ANY PHOTOCOPY MUST BE OF THIS ENTIRE DOCUMENT

Material Safety Data Sheet

Section 1 - Identification of The Material and Supplier

Product Name:	**Elfolna DS 32**
Product Code:	GCK
Product Use:	Cutting fluid, neat metalworking oil.
Supplier:	**Total Oil Australia Pty Ltd (ABN 15 149 501 922)** **689 Burke Rd, Camberwell** **Victoria 3124** **AUSTRALIA** **Phone: +61 (03) 9861 8668** **Fax: +61 (03) 9882 0447**
EMERGENCY TELEPHONE NUMBER:	**1800 033 111 (Australia), 0800 734 607 (New Zealand)**
Chemical nature:	Product containing mineral oil with less than 3% DMSO extract as measured by IP 346.
Creation Date:	**July, 2011**
This version issued:	**July, 2011** and is valid for 5 years from this date.

Section 2 - Hazards Identification

Statement of Hazardous Nature

This product is classified as: Not classified as hazardous according to the criteria of SWA.

Not a Dangerous Good according to the Australian Dangerous Goods (ADG) Code.

Risk Phrases: Not Hazardous - No criteria found.
Safety Phrases: S23, S24/25. Do not breathe mists. Avoid contact with skin and eyes.
SUSMP Classification: None allocated.
ADG Classification: None allocated. Not a Dangerous Good under the ADG Code.
UN Number: None allocated

Emergency Overview

Physical Description & Colour: Limpid yellow coloured liquid.
Odour: Characteristic odour.
Major Health Hazards: no significant risk factors have been found for this product.

Potential Health Effects

Inhalation:

Short Term Exposure: Available data indicates that this product is not harmful. In addition product is unlikely to cause any discomfort or irritation. Inhalation of high concentration of aerosols may cause mild irritation of the throat.
Long Term Exposure: No data for health effects associated with long term inhalation.

Skin Contact:

Short Term Exposure: Available data indicates that this product is not harmful. It should present no hazards in normal use. In addition product is unlikely to cause any discomfort in normal use.
Long Term Exposure: oil blisters may develop following prolonged and repeated exposure through contact with stained clothing.

Eye Contact:

Short Term Exposure: This product may be mildly irritating to eyes, but is unlikely to cause anything more than mild discomfort which should disappear once product is removed.
Long Term Exposure: No data for health effects associated with long term eye exposure.

Ingestion:

Short Term Exposure: Significant oral exposure is considered to be unlikely. However, this product may be irritating to mucous membranes but is unlikely to cause anything more than transient discomfort.
Long Term Exposure: No data for health effects associated with long term ingestion.

Carcinogen Status:

SWA: No significant ingredient is classified as carcinogenic by SWA.
NTP: No significant ingredient is classified as carcinogenic by NTP.
IARC: No significant ingredient is classified as carcinogenic by IARC.

Section 3 - Composition/Information on Ingredients

Ingredients	CAS No	Conc,%	TWA (mg/m^3)	STEL (mg/m^3)
Oil, mineral	8012-95-1	>90	5 (mist)	not set
Zinc alkyl di thiophosphate	68649-42-3	<0.52	not set	not set
Aryl phenol		<0.17	not set	not set

This is a commercial product whose exact ratio of components may vary slightly. Minor quantities of other non hazardous ingredients are also possible.

The SWA TWA exposure value is the average airborne concentration of a particular substance when calculated over a normal 8 hour working day for a 5 day working week. The STEL (Short Term Exposure Limit) is an exposure value that may be equalled (but should not be exceeded) for no longer than 15 minutes and should not be repeated more than 4 times per day. There should be at least 60 minutes between successive exposures at the STEL. The term "peak "is used when the TWA limit, because of the rapid action of the substance, should never be exceeded, even briefly.

Section 4 - First Aid Measures

General Information:

You should call The Poisons Information Centre if you feel that you may have been poisoned, burned or irritated by this product. The number is 13 1126 from anywhere in Australia (0800 764 766 in New Zealand) and is available at all times. Have this MSDS with you when you call.

Inhalation: First aid is not generally required. If in doubt, contact a Poisons Information Centre or a doctor.
Skin Contact: Gently blot away excess liquid. Irritation is unlikely. However, if irritation does occur, flush with lukewarm, gently flowing water for 5 minutes or until chemical is removed.
Eye Contact: Quickly and gently blot material from eyes. No effects expected. If irritation does occur, flush contaminated eye(s) with lukewarm, gently flowing water for 5 minutes or until the product is removed. Obtain medical advice if irritation becomes painful or lasts more than a few minutes. Take special care if exposed person is wearing contact lenses.
Ingestion: If product is swallowed or gets in mouth, do NOT induce vomiting; wash mouth with water and give some water to drink. If symptoms develop, or if in doubt contact a Poisons Information Centre or a doctor.

Section 5 - Fire Fighting Measures

Fire and Explosion Hazards: The major hazard in fires is usually inhalation of heated and toxic or oxygen deficient (or both), fire gases. This product is classified as a C2 combustible product. There is no risk of an explosion from this product under normal circumstances if it is involved in a fire. Violent steam generation or eruption may occur upon application of direct water stream on hot liquids. Vapours from this product are heavier than air and may accumulate in sumps, pits and other low-lying spaces, forming potentially explosive mixtures. They may also flash back considerable distances.
Fire decomposition products from this product are likely to be irritating if inhaled.
Extinguishing Media: Suitable extinguishing media are carbon dioxide, dry chemical, foam, water fog.
Fire Fighting: If a significant quantity of this product is involved in a fire, call the fire brigade.

Flash point:	>190°C, Cleveland open cup.
Upper Flammability Limit:	No data.
Lower Flammability Limit:	No data.
Autoignition temperature:	No data.
Flammability Class:	C2

Section 6 - Accidental Release Measures

Accidental release: Minor spills do not normally need any special cleanup measures. In the event of a major spill, prevent spillage from entering drains or water courses. As a minimum, wear overalls, goggles and gloves. Suitable materials for protective clothing include nitrile, neoprene. Eye/face protective equipment should comprise as a minimum, protective glasses and, preferably, goggles. If there is a significant chance that vapours or mists are likely

to build up in the cleanup area, we recommend that you use a respirator. Usually, no respirator is necessary when using this product. However, if you have any doubts consult the Australian Standard mentioned below (section 8). Stop leak if safe to do so, and contain spill. Absorb onto sand, vermiculite or other suitable absorbent material. If spill is too large or if absorbent material is not available, try to create a dike to stop material spreading or going into drains or waterways. Sweep up and shovel or collect recoverable product into labelled containers for recycling or salvage, and dispose of promptly. Can be slippery on floors, especially when wet. Recycle containers wherever possible after careful cleaning. After spills, wash area preventing runoff from entering drains. If a significant quantity of material enters drains, advise emergency services. This material may be suitable for approved landfill. Ensure legality of disposal by consulting regulations prior to disposal. Thoroughly launder protective clothing before storage or re-use. Advise laundry of nature of contamination when sending contaminated clothing to laundry.

Section 7 - Handling and Storage

Handling: Keep exposure to this product to a minimum, and minimise the quantities kept in work areas. Check Section 8 of this MSDS for details of personal protective measures, and make sure that those measures are followed. The measures detailed below under "Storage" should be followed during handling in order to minimise risks to persons using the product in the workplace. Also, avoid contact or contamination of product with incompatible materials listed in Section 10.

Storage: Note that this product is combustible and therefore, for Storage, meets the definition of Dangerous Goods in some states. If you store large quantities (tonnes) of such products, we suggest that you consult your state's Dangerous Goods authority in order to clarify your obligations regarding their storage.

Store packages of this product in a cool place. Make sure that containers of this product are kept tightly closed. Keep containers dry and away from water. Make sure that the product does not come into contact with substances listed under "Incompatibilities" in Section 10. Some liquid preparations settle or separate on standing and may require stirring before use. Check packaging - there may be further storage instructions on the label.

Section 8 - Exposure Controls and Personal Protection

The following Australian Standards will provide general advice regarding safety clothing and equipment:

Respiratory equipment: **AS/NZS 1715**, Protective Gloves: **AS 2161**, Occupational Protective Clothing: AS/NZS 4501 set 2008, Industrial Eye Protection: **AS1336** and **AS/NZS 1337**, Occupational Protective Footwear: **AS/NZS2210**.

SWA Exposure Limits	TWA (mg/m^3)	STEL (mg/m^3)
Oil, mineral	5 (mist)	not set

No special equipment is usually needed when occasionally handling small quantities. The following instructions are for bulk handling or where regular exposure in an occupational setting occurs without proper containment systems.

Ventilation: This product should only be used in a well ventilated area. If natural ventilation is inadequate, use of a fan is suggested.

Eye Protection: Eye protection is not normally necessary when this product is being used. However, if in doubt, wear suitable protective glasses or goggles.

Skin Protection: The information at hand indicates that this product is not harmful and that normally no special skin protection is necessary. However, we suggest that you routinely avoid contact with all chemical products and that you wear suitable gloves (preferably elbow-length) when skin contact is likely.

Protective Material Types: We suggest that protective clothing be made from the following materials: nitrile, neoprene.

Respirator: Usually, no respirator is necessary when using this product. However, if you have any doubts consult the Australian Standard mentioned above.

Section 9 - Physical and Chemical Properties:

Physical Description & colour:	Limpid yellow coloured liquid.
Odour:	Characteristic odour.
Boiling Point:	Not available.
Freezing/Melting Point:	No specific data. Liquid at normal temperatures.
Volatiles:	Nil at 100°C.
Vapour Pressure:	Nil at normal ambient temperatures.
Vapour Density:	No data.
Specific Gravity:	0.880 at 15°C (ASTM D 1298)
Water Solubility:	Insoluble.
pH:	No data.
Volatility:	Nil at normal ambient temperatures.
Odour Threshold:	No data.
Evaporation Rate:	No data.

Coeff Oil/water Distribution: No data.
Viscosity: Kinematic viscosity at 40°C: about 32 mm^2/s (ISO 3104)
Autoignition temp: No data.

Section 10 - Stability and Reactivity

Reactivity: This product is unlikely to react or decompose under normal storage conditions. However, if you have any doubts, contact the supplier for advice on shelf life properties.
Conditions to Avoid: This product should be kept in a cool place, preferably below 30°C. Keep containers tightly closed. Containers should be kept dry.
Incompatibilities: strong oxidising agents.
Fire Decomposition: Combustion forms carbon dioxide, and if incomplete, carbon monoxide, various hydrocarbons, aldehydes and smoke. Water is also formed. Small quantities of oxides of nitrogen, sulfur, zinc and phosphorus. Carbon monoxide poisoning produces headache, weakness, nausea, dizziness, confusion, dimness of vision, disturbance of judgment, and unconsciousness followed by coma and death.
Polymerisation: This product will not undergo polymerisation reactions.

Section 11 - Toxicological Information

Local Effects:
Target Organs: There is no data to hand indicating any particular target organs.

- **Skin contact:** Characteristic skin lesions (pimples) may develop following prolonged and repeated exposure through contact with contaminated clothing.
- **Sensitization:** Not classified as a sensitiser.
- **Carcinogenicity:** Not classified as a carcinogen.
- **Mutagenicity:** Not classified as a mutagen.

Used motor oils have been shown to cause skin cancer in mice following repeated application and continuous exposure. Brief or intermittent skin contact with used oil is not expected to have serious effects in human if the oil is thoroughly removed by washing with soap and water.

Classification of Hazardous Ingredients

Ingredient	Risk Phrases

No ingredient mentioned in the HSIS Database is present in this product at hazardous concentrations.

Section 12 - Ecological Information

Harmful to aquatic organisms, may cause long-term adverse effects in the aquatic environment. This product is unlikely to be mobile in soils.
Experimental data on the finished product are not available. No information available for used product, however it is considered to present low danger for aquatic life.
Mobility:

- There is a slow loss by evaporation in air.
- Given its physical and chemical characteristics, the product generally shows low soil mobility.
- The product is insoluble; it spreads on the surface of water.

Zinc alkyl dithiophosphate
EC_{50} *Daphnia magna* (48h) 1 - 1.5 mg/L
LC_{50} *Pimephales promelas* (static) (96h) 1.0-5.0 mg/L
LC_{50} *Pimephales promelas* (semi-static) (96h) 10.0-35.0 mg/L

Section 13 - Disposal Considerations

Disposal: This product may be recycled if unused, or if it has not been contaminated so as to make it unsuitable for its intended use. If it has been contaminated, it may be possible to reclaim the product by filtration, distillation or some other means. If neither of these options is suitable, consider controlled incineration, or landfill.

Section 14 - Transport Information

ADG Code: This product is not classified as a Dangerous Good. No special transport conditions are necessary unless required by other regulations.

Section 15 - Regulatory Information

AICS: All of the significant ingredients in this formulation are compliant with NICNAS regulations.

Section 16 - Other Information

This MSDS contains only safety-related information. For other data see product literature.

Acronyms:

ADG Code	Australian Code for the Transport of Dangerous Goods by Road and Rail (7th edition)
AICS	Australian Inventory of Chemical Substances
SWA	Safe Work Australia, formerly ASCC and NOHSC
CAS number	Chemical Abstracts Service Registry Number
Hazchem Code	Emergency action code of numbers and letters that provide information to emergency services especially firefighters
IARC	International Agency for Research on Cancer
NOS	Not otherwise specified
NTP	National Toxicology Program (USA)
R-Phrase	Risk Phrase
SUSMP	Standard for the Uniform Scheduling of Medicines & Poisons
UN Number	United Nations Number

THIS MSDS SUMMARISES OUR BEST KNOWLEDGE OF THE HEALTH AND SAFETY HAZARD INFORMATION OF THE PRODUCT AND HOW TO SAFELY HANDLE AND USE THE PRODUCT IN THE WORKPLACE. EACH USER MUST REVIEW THIS MSDS IN THE CONTEXT OF HOW THE PRODUCT WILL BE HANDLED AND USED IN THE WORKPLACE.

IF CLARIFICATION OR FURTHER INFORMATION IS NEEDED TO ENSURE THAT AN APPROPRIATE RISK ASSESSMENT CAN BE MADE, THE USER SHOULD CONTACT THIS COMPANY SO WE CAN ATTEMPT TO OBTAIN ADDITIONAL INFORMATION FROM OUR SUPPLIERS

OUR RESPONSIBILITY FOR PRODUCTS SOLD IS SUBJECT TO OUR STANDARD TERMS AND CONDITIONS, A COPY OF WHICH IS SENT TO OUR CUSTOMERS AND IS ALSO AVAILABLE ON REQUEST.

Please read all labels carefully before using product.

This MSDS is prepared in accord with the SWA document “National Code of Practice for the Preparation of Material Safety Data Sheets” 2nd Edition [NOHSC:2011(2003)]

Copyright © Kilford & Kilford Pty Ltd, July, 2011.

http://www.kilford.com.au/ Phone (02)9251 4532

7: Ocean Sentinel Technical Report

This paper describes the novel Ocean Sentinel instrumentation buoy that the Northwest National Marine Renewable Energy Center (NNMREC) is developing with AXYS Technologies for the testing of wave energy converters (WECs).The Ocean Sentinel instrumentation buoy is a surface buoy based on the 6-meter NOMAD (Navy Oceanographic Meteorological Automatic Device) design. It will provide power analysis and data acquisition, environmental monitoring, as well as an active converter interface to control power dissipation to an on-board electrical load.

A Novel Ocean Sentinel Instrumentation Buoy for Wave Energy Testing

Annette von Jouanne, Ted Brekken, Terry Lettenmaier, Ean Amon, Reo Phillips

***Abstract*-- This paper presents a novel Ocean Sentinel instrumentation buoy that the Northwest National Marine Renewable Energy Center (NNMREC) is developing with AXYS Technologies for the testing of wave energy converters (WECs). NNMREC is a Department of Energy sponsored partnership between Oregon State University (OSU), the University of Washington (UW), and the National Renewable Energy Laboratory (NREL). The Ocean Sentinel instrumentation buoy is a surface buoy based on the 6-meter NOMAD (Navy Oceanographic Meteorological Automatic Device) design. The Ocean Sentinel will provide power analysis and data acquisition, environmental monitoring, as well as an active converter interface to control power dissipation to an on-board electrical load. The WEC under test and the instrumentation buoy will be moored with approximately 100 meters separation, connected by a power and communication umbilical cable. The presentation of the paper will include the deployment and example testing of wave energy devices using the Ocean Sentinel instrumentation buoy.**

I. Introduction

OCEAN wave energy is an area of increased interest, with a number of demonstration wave energy converter (WEC) prototypes being developed around the world. Wave energy has several advantages over other forms of renewable energy in that the waves are more available and more predictable with better demand matching [1]. Wave energy also offers higher energy densities, enabling devices to extract more power at consequent lower costs and reduced visual impact [2].

Ocean wave power is currently a significantly untapped resource. Unlike wind, there are no clearly superior technological solutions yet established for harnessing the energy. However, the incentives are driving innovation as the practical potential for wave energy worldwide is projected to be between 2 trillion and 4 trillion kilowatt hours per year, and for the United States (US) it is estimated that the resource could be comparable to the current traditional hydro power contribution; approximately 6 percent of the US annual electrical load [3].

Ocean waves have well-defined geographical attributes, where the wave power tends to be stronger on the western coasts of land masses, and also stronger moving north and south away from the equator toward the poles, as shown in Fig. 1. This is due to the global wind cells, primarily the Westerlies, which tend to cause eastwardly moving waves.

Ocean waves are effectively a form of condensed solar energy. Uneven heating of the earth's surface creates the wind, and the wind moving over the surface of the water creates waves through friction and pressure effects. At each stage of this process, the power density increases. In a location with a reasonable solar resource, the average insolation may be approximately several hundred Watts per square meter. Wind power per wind turbine swept area is a few times larger, but still within an order of magnitude. On the West Coast of the United States, ocean wave power is approximately 30 kW per meter of wave crest length.

The high power density is one of the advantages of wave energy, however, with this high power density is commensurate survival design requirements. Ocean testing facilities are essential to enable wave energy developers to demonstrate performance and survivability, and to optimize devices. Currently, the U.S. marine energy industry is challenged by the lack of proper and standardized infrastructure to test and deploy devices in the marine environment. In addition, many WEC technologies are ready for field trials, but are not sufficiently mature to be connected to the electrical grid for commercial power production. This paper presents an Ocean Sentinel instrumentation buoy solution being developed by the Northwest National Marine Renewable Energy Center (NNMREC) in collaboration with AXYS Technologies for the non-grid-connected testing of wave energy converters (WECs).

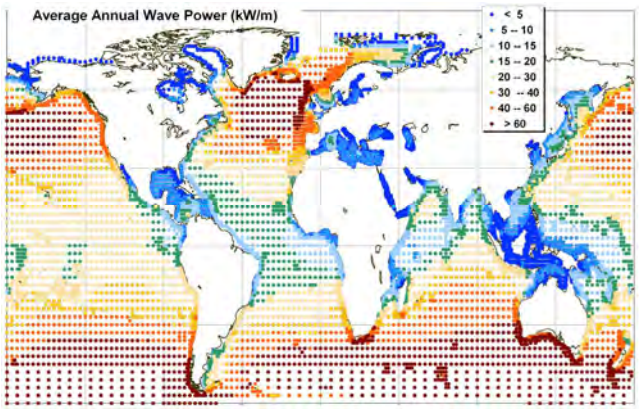

Fig. 1. Global wave energy potential in kW/m. Wave power is defined in units of power (Watts) per unit of length transverse to the direction of wave propagation (i.e., along the crest). (Image courtesy of S. Barstow and G. Mork, "Worldwaves wave energy map," tech. rep., Fugro OCEANOR AS, March 2008 [4])

This work was supported in part the US Department of Energy (Award Number DE-FG36-08GO18179) for the Northwest National Marine Renewable Energy Center (NNMREC), and the State of Oregon Capital Funding Program.

II. The Northwest National Marine Renewable Energy Center (NNMREC)

Since 2004, OSU has made strong efforts to establish a National Marine Renewable Energy Center in Oregon, which was awarded by the U.S. Department of Energy in September 2008 through the Water Power Program. NNMREC is headquartered at Oregon State University (OSU), and is a partnership between OSU, the University of Washington (UW) and the National Renewable Energy Laboratory (NREL).

The mission of NNMREC is to facilitate the commercialization of marine energy technology, inform regulatory and policy decisions, and to close key gaps in scientific understanding with a focus on student growth and development. Primary center activities include: 1) development of facilities to serve as an integrated, standardized test center for U.S. and international developers of wave and tidal energy; 2) evaluation of potential environmental, ecological and social impacts, focusing on the compatibility of marine energy technologies in areas with sensitive environments and existing users; 3) device and array optimization for effective deployment; 4) improved forecasting; and 5) increased reliability and survivability of marine energy systems.

Fig. 2 summarizes the NNMREC wave energy testing assets from small-scale to full-scale device development. NNMREC's wave energy ocean testing facilities are being developed in a phased process where the first phase consists of scaled mobile ocean deployed WEC device test berths, including power analysis & data acquisition (PADA) systems and load banks for power dissipation. The next phases include the development of full-scale ocean deployed WEC device test berths, including cable-to-shore, PADA, grid emulation and finally grid connection. This paper focuses on the ocean testing of WECs via a stand-alone instrumentation buoy described in detail in Section III.

Fig. 2. NNMREC wave energy testing assets for scaled to full-scale device development.

III. Ocean Sentinel Instrumentation Buoy

A novel Ocean Sentinel instrumentation buoy is being developed by NNMREC and AXYS Technologies for WEC testing. A concept diagram of the instrumentation buoy testing a WEC is shown in Fig. 3. The Ocean Sentinel is a surface buoy based on the 6-meter NOMAD (Navy Oceanographic Meteorological Automatic Device) oceanographic buoy design. The instrumentation buoy will facilitate open-ocean, stand-alone testing of WECs with average power outputs of up to 100 kW. Deployment will typically be at a NNMREC test site that is approximately 2.5 nautical miles offshore from Yaquina Head, north of Newport, Oregon.

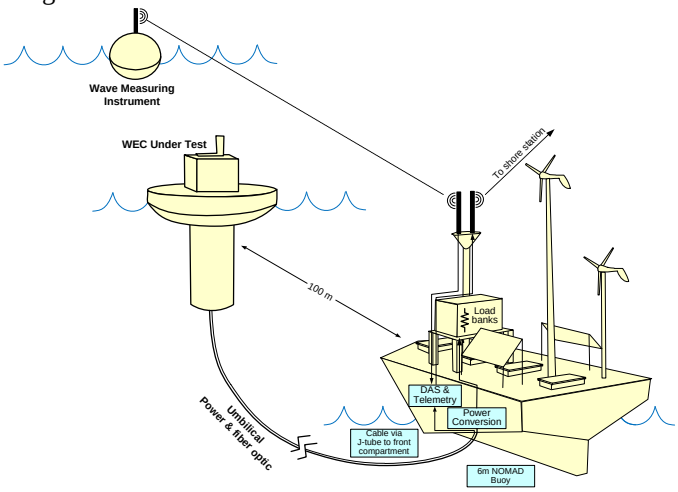

Fig. 3. WEC Testing with Ocean Sentinel Instrumentation Buoy.

WECs under test will be moored approximately 100 meters from the instrumentation buoy, connected by a power and communication umbilical cable. Power generated by the WEC will be controlled by switch gear and power conversion equipment located on-board the instrumentation buoy and dissipated in an on-board load bank. Data will be transmitted from the WEC under test to the instrumentation buoy via the umbilical. Wave data recorded by a wave measuring instrument will also be transmitted to the instrumentation buoy, via wireless telemetry.

The primary functions of the instrumentation buoy are as follows:

1. Provide stand-alone electrical loading and power conversion for the WEC under test.
2. Measure and record WEC power output.
3. Collect and store data transmitted from both the WEC under test and a wave measuring instrument moored close by.
4. Transmit collected data to a shore station via a wireless telemetry system.
5. Conduct environmental monitoring.

A. Ocean Sentinel Power System

An on-board power system (see Fig. 4) developed by AXYS Technologies will supply power to all equipment installed on-board the instrumentation buoy and will also export instrumentation power to the WEC under test. The features of this system are as follows:

1. The system will be capable of continuously providing at least 400 W of instrumentation power at 24 Vdc. An estimated power budget is shown in Table I.

TABLE I
OCEAN SENTINEL POWER BUDGET

Equipment	Power Budget (W)
Export to WEC under test	150
WEC power converter	125
NNMREC data acquisition system (DAS)	20
Telemetry/communications	75
On-board instrumentation	30
Other	
Total	400

2. Power will be generated by solar panels, wind generation, and a bio-diesel fuel generator.
3. The solar and wind generation are designed to provide the primary power required during normal operations, and sufficient battery storage will be included for typical periods when this generation is not adequate (based on Newport, Oregon characteristics).
4. The generator will be relied on to provide back-up power if required, and is designed for 3-month minimum deployment periods without the need for refueling, though the system is designed for emergency refueling at sea.
5. Remote monitoring of the power system status, including battery state of charge, solar and turbine performance, generator performance and fuel level, as well as instrumentation loading will be transmitted to shore in real-time.
6. Absorbed glass mat type, sealed lead acid batteries will be used to prevent spillage, with smart charge controllers and venting used to reduce the chance of hydrogen buildup inside the buoy.

In addition, the power system is being designed for expansion in the future, to enable NNMREC to install a grid emulator or other power conversion equipment on-board the buoy. It is anticipated that a grid emulator will periodically require several hundred Watts of additional power at 700 Vdc. This expansion can be powered by the existing power system. A possible enhancement will allow the use of WEC output power, when available, as a supplemental power source to reduce fuel consumption.

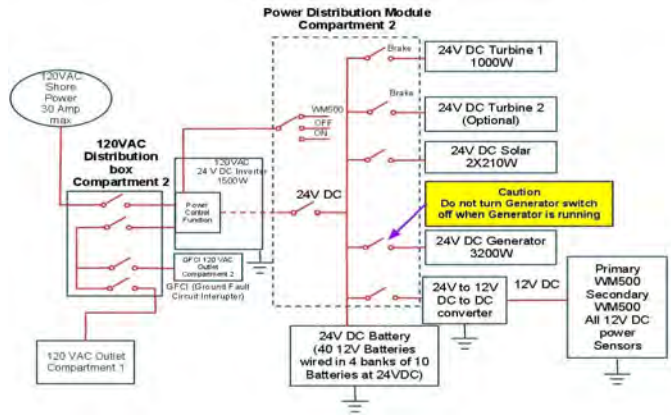

Fig. 4. Ocean Sentinel Power System

B. On-Board Instrumentation and Equipment

The following instrumentation will also be installed on-board the Ocean Sentinel buoy: an anemometer, wind direction sensor, and video cameras that view the deck and water immediately surrounding the instrumentation buoy. Wind data from this instrumentation will be recorded by the NNMREC DAS for integration with WEC power and wave data.

Other equipment installed on-board the Ocean Sentinel will include a navigation light, Automatic Identification System (AIS) transponder, Radar reflector, and Global Positioning System (GPS) with satellite communications. In addition, NNMREC anticipates that other environmental sensing equipment will be installed on-board the Ocean Sentinel by OSU researchers conducting studies unrelated to WEC testing.

C. TRIAXYS Directional Wave Measurement Buoy

A TRIAXYS wave buoy supplied by AXYS Technologies will be used for ocean wave and current measurements. This buoy will be moored approximately 100 m in the prevailing wave direction from the WEC under test, and will transmit wave and current data to the Ocean Sentinel via radio telemetry. Accelerometer and rate gyro data will be processed on board the TRIAXYS buoy to produce both directional and non-directional wave frequency spectrums. An Acoustic Doppler Current Profiler (ADCP) on board the TRIAXYS buoy will measure the ocean current profile down to a depth of 40 m. The wave frequency spectrum and current profile data will be transmitted to the Ocean Sentinel, at configurable intervals.

D. Umbilical Cable

The umbilical cable connecting the Ocean Sentinel and the WEC under test will be approximately 200 m long. The conductors to be included in the umbilical are listed in Table II. The insulation will be rated for 1000 V and the WEC power conductors are being sized for 125 A continuous; the sizes listed in Table II take sea water cooling into account.

TABLE II
CONDUCTORS FOR OCEAN SENTINEL UMBILICAL

Conductor	Number and Size
WEC output power	(3) 2 AWG
Neutral sense	(1) 12 AWG
WEC instrument power	(2) 12 AWG
Fiber optic	(2) pairs, single mode conductors

E. Ocean Sentinel Data Acquisition and Telemetry Systems

The data acquisition, telemetry and networking systems used on-board the Ocean Sentinel are shown in Figs. 5 and 6. Two data acquisition systems (DASs) will be used: 1) a National Instruments (NI) CompactRIO based system developed by NNMREC, that will be used to measure and record WEC test data (see Fig. 5), and 2) a Watchman500 DAS developed by AXYS Technologies that will be used to monitor and control the power system, monitor environmental sensors, and interface with the TRIAXYS wave buoy (see Fig. 6). The two DASs will communicate to shore via a common telemetry system.

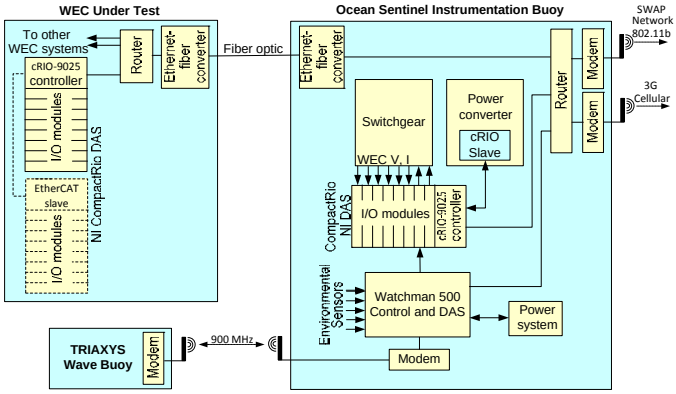

Fig. 5. National Instruments (NI) CompactRIO based DAS system to measure and record WEC test data

1) CompactRIO DAS:

The CompactRIO DAS will record the following:

1. The power output of the WEC under test (measured on-board the instrumentation buoy).
2. Any data received from a DAS installed on-board the WEC under test.
3. Wave, ocean current, wind speed and wind direction data provided by the Watchman 500 through a serial link.

This DAS will be compatible with standardized CompactRIO DAS modules developed by the National Renewable Energy Laboratory (NREL) for installation on-board WECs under test, and will also be integrated with the power switchgear and converter control shown in Fig. 7. The CompactRIO hardware will allow NNMREC a high degree of flexibility to customize the DAS for different WEC tests. The CompactRIO controllers on-board the instrumentation buoy and WEC under test will be interconnected via wireless telemetry to a NNMREC server at the OSU Hatfield Marine Science Center (HMSC) on shore. The WEC and instrumentation buoy CompactRIO controllers will have capability to store data locally, with redundancy, as well as to transfer data to the shore PC.

2) Watchman500 Control and DAS:

The Watchman500 system has been developed by AXYS Technologies to control power systems and monitor environmental sensors on-board numerous meteorological buoys deployed by AXYS. The Watchman500 will have the following functions on-board the Ocean Sentinel:

1. Power system control, monitoring, and safety systems.
2. Bilge level monitoring and alarms.
3. Mooring system watch circle monitoring and alarm.
4. AIS interface.
5. Interface with the TRIAXYS wave measuring buoy to receive ocean wave and current data.
6. Interface with onboard wind sensors.
7. Interface with on-board video cameras.
8. Record data from environmental sensors installed on-board the Ocean Sentinel for purposes other than WEC testing.
9. Provide ocean wave, ocean current, and wind data to the CompactRIO DAS through a serial link.

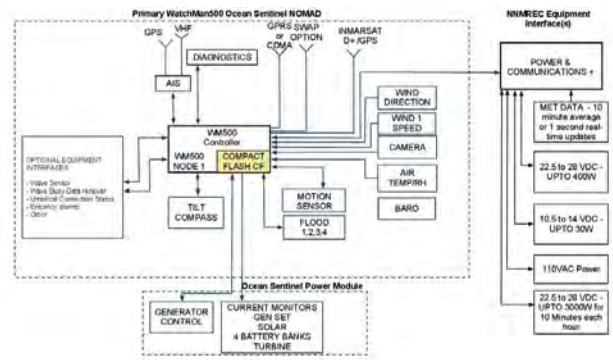

Fig. 6. Watchman500 DAS to monitor and control the Ocean Sentinel power system and monitor environmental sensors.

3) Telemetry:

Communications between the Ocean Sentinel and shore will be provided by two redundant telemetry systems when deployed at the NNMREC test site: 1) an existing, 802.11b Ship to Shore Wireless Access Protocol (SWAP) network run by the OSU College of Earth, Ocean and Atmospheric Sciences (CEOAS), and 2) 3G cellular. NNMREC will develop a router-router local area network (LAN) tunnel that will use redundant SWAP and 3G paths to provide an Ethernet connection between the Ocean Sentinel and the HMSC server on shore.

Communication will be provided between the Ocean Sentinel and the WEC under test by optical fiber integrated into the umbilical and Ethernet to fiber converters. A 900 MHz serial link will be used for communication between the TRIAXYS wave measuring buoy and the Watchman 500 DAS on board the Ocean Sentinel. The Watchman500 DAS will also have an independent INMARSAT D+ satellite communication link providing secondary data transmission and system control capabilities when required.

F. WEC Electrical Loading and Power Conversion

Fig. 7 shows the contactor switching, power conversion, and load bank system which will be installed on-board the instrumentation buoy to provide a stand-alone load for the WEC under test. This system will provide generator control for WECs in early stages of development that do not include on-board generator power conversion. A switchgear enclosure that includes the contactors along with a disconnect, current and voltage sensors, and fuses will be installed below deck in the forward compartment of the Ocean Sentinel, together with the power converter. A 100 kW, air cooled load bank will be installed above deck.

Because NNMREC anticipates testing WECs with different power outputs and generator configurations, the Ocean Sentinel load system is being designed for a high degree of flexibility, so that the air cooled load bank can be reconnected for different voltages and powers, and can be controlled by either contactor switching, converter control, or a combination of the two. The system will be reconfigurable via terminations in the switchgear enclosure. WECs with output current to 125 A continuous will be accommodated, for a power capability of 100 kW at 460 V or 50 kW at 230 V at unity power factor.

In reference to Fig. 7, the variable speed, variable frequency electrical generator on-board the WEC will connect via the umbilical cable to three sets of three-phase contactors. The outputs of two sets of contactors will normally be connected to two 460 V, 25 kW, delta-connected sections of the load bank. These load bank sections can be reconnected for 230 V, 12.5 kW, or lower power if wye connections are used. A third set of contactors may either be connected to a 460 V, 50 kW load bank section, or to the input of a 50 kW power converter. The output of the power converter, when in use, will be connected to parallel load bank elements. All contactors will be dc-rated for operation at low frequency, and will be designed for frequent switching to provide incremental load control when connected directly to sections of the load bank. When the contactors are connected to the power converter, they will only be opened when the WEC output is disabled or fault conditions exist.

Contactor control as well as current and voltage monitoring will be performed by the CompactRIO DAS controller described in Section D. This controller will be programmable with LabVIEW software, allowing it to be configured for the specific requirements of each WEC developer. Communications between this controller and the WEC will be possible via fiber optics in the umbilical, either using a dedicated serial link or Ethernet.

The 50 kW power converter will have a passive rectified front end that will interface with permanent magnet (PM) generators. Three half bridge Insulated Gate Bipolar Transistor (IGBT) sections will be used in parallel as a buck converter to control the load bank. This configuration has been selected to make use of off-the-shelf converter equipment designed for three-phase equipment.

The power converter design will be similar to an earlier 30 kW OSU design that was developed for testing scaled WECs from a service vessel [5]. A CompactRIO EtherCAT slave controller will be installed in the converter enclosure to provide IGBT switching patterns, load current control, and protection. This slave controller will work together with the master DAS controller which will monitor WEC currents and will provide the load current command per a torque command from the WEC control.

NNMREC anticipates that some WEC developers may require a converter to interface with an asynchronous generator. For this purpose, the converter is being designed with sufficient space inside the enclosure to add an active rectifier at a later date. There will also be sufficient space in the forward compartment of the Ocean Sentinel to allow replacement of the passive converter with a 100 kW, active converter in the future if necessary. The Ocean Sentinel is being designed with provisions that will allow seawater cooling of the converter in that case.

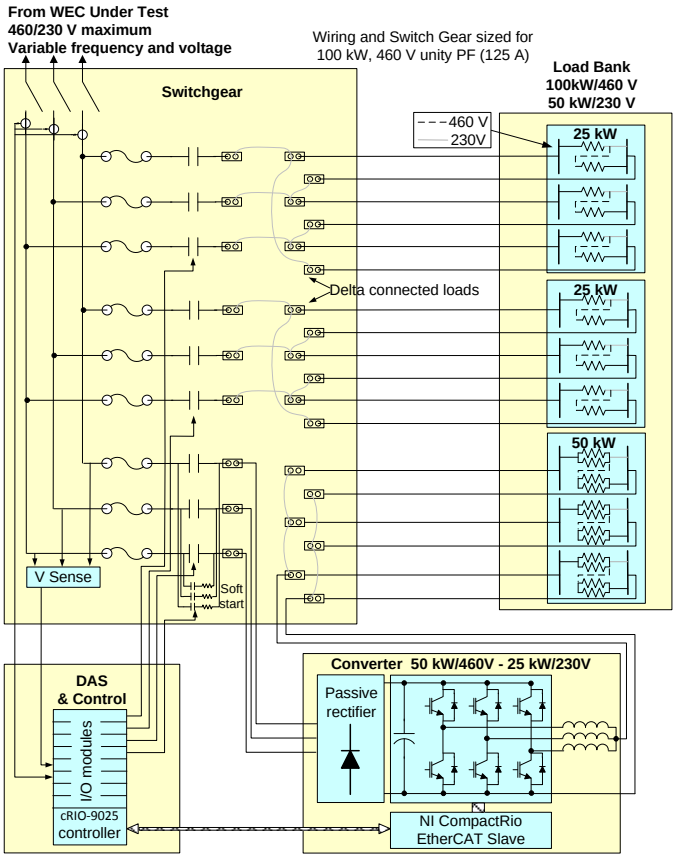

Fig. 7. Instrumentation Buoy Electrical Load System.

IV. Conclusions

This paper presented a novel Ocean Sentinel instrumentation buoy for testing WECs. Wave energy device development proceeds from small-scale to full-scale and the presented system is essential to enabling WECs to be advanced and optimized. This Ocean Sentinel is mobile, allowing in-situ testing of WEC devices throughout the west

coast, where the homeport is the NNMREC pre-permitted testing site near Newport, Oregon. The instrumentation buoy solution includes standardized testing procedures and protocols as well as environmental monitoring. Academia, government, industry, and local communities are participating in the development of this NNMREC ocean testing capability to advance marine renewable energy. The presentation of the paper will include the deployment and example ocean testing using the Ocean Sentinel instrumentation buoy.

V. Acknowledgments

The authors acknowledge support for this work from the US Department of Energy (Award Number DE-FG36-08GO18179) for the Northwest National Marine Renewable Energy Center (NNMREC), and the State of Oregon Capital Funding Program. The support of the following agencies has been a tremendous benefit to OSU's wave energy research: the Oregon delegation, Bonneville Power Administration (BPA), Central Lincoln PUD (CLPUD), Portland General Electric (PGE), Pacific Power, Oregon Sea Grant (OSG), and the Fishermen Involved in Natural Energy (FINE).

VI. References

[1] R. Bedard, "Feasibility of using Wavewatch III for days-ahead output forecasting for grid connected wave energy projects in Washington and Oregon," Electric Power Research Institute (EPRI), Stage Gate 2 Final Report EPRI-WP-012, Feb. 2008.

[2] M. Leijon, R. Waters, M. Rahm, O. Svennson, C. Bostrom, E. Stromstedt, J. Engstrom, S. Tyrberg, A. Savin, H. Gravrakmo, H. Bernhoff, J. Sundberg, J. Isberg, O. Agren, O. Danielsson, M. Eriksson, E. Lejerskog, B. Bolund, S. Gustafsson, and K. Thorburn, "Catch the wave to electricity," IEEE Power and Energy Magazine, January/February 2009.

[3] R. Bedard, M. Previsic, G. Hagerman, B. Polagye, W. Musial, J. Klure, A. von Jouanne, U. Mathur, C. Collar, C. Hopper, and S. Amsden, "North american ocean energy status - march 2007," in *European Wave and Tidal Energy Conference*, 2007.

[4] S. Barstow and G. Mork, "Worldwaves wave energy map," tech. rep., Fugro OCEANOR AS, March 2008

[5] E. Amon, T.K.A. Brekken, and A. von Jouanne, "A power analysis and data acquisition system for ocean wave energy device testing," Renewable Energy: An International Journal, vol. 36, pp. 1922-1930, July 2011.

VII. Biographies

Annette von Jouanne (S'94, M'95, SM'00, F'09) has been a professor in the School of Electrical Engineering and Computer Science at Oregon State University since 1995. She received her Ph.D. degree in Electrical Engineering from Texas A&M University where she also worked with Toshiba International Industrial Division. Her research interests include power electronics and drives, power systems, wind and wave energy as well as energy storage systems. With a passion for renewables, she initiated the Wave Energy program at OSU in 1998, developing it into a national multidisciplinary program. She is also Co-Directing the Wallace Energy Systems & Renewables Facility (WESRF). Dr. von Jouanne has received national recognition for her research and teaching, and she is a Registered Professional Engineer as well as a National Academy of Engineering "Celebrated Woman Engineer."

Ted K. A. Brekken (M '06) is an Assistant Professor in Energy Systems at Oregon State University. He received his B.S., M.S., and Ph.D. from the University of Minnesota in 1999, 2002, and 2005 respectively. He studied electric vehicle motor design at Postech in Pohang, South Korea in 1999. He also studied wind turbine control at the Norwegian University of Science and Technology (NTNU) in Trondheim, Norway in 2004-2005 on a Fulbright scholarship. His research interests include control, power electronics and electric drives; specifically digital control techniques applied to renewable energy systems. He is co-director of the Wallace Energy Systems and Renewables Facility (WESRF), and a recipient of the NSF CAREER award.

Terry Lettenmaier (M '00) received his B.S. degree from the University of Washington and M.S. degree from the University of Wisconsin, Madison. He is currently working toward a Ph.D. degree at Oregon State University. From 1987 to 1990 he was an Electrical Engineer with Sweo Controls, Inc., from 1990 to 2000 he was a Project Engineer with Avtech Corp., and from 2000 to 2004 he was a Senior Engineer with Global Energy Concepts, LLC. From 2005 to 2010 he was an independent consultant, specializing in wind turbine testing. He is a Licensed Professional Engineer in the states of Oregon and Washington.

Ean Amon (M'11) received the B.S., M.S., and Ph.D. degrees in electrical engineering from Oregon State University, Corvallis, in 2004, 2007, and 2010, respectively. He is an Assistant Professor in Energy Systems at Oregon State University and Senior Researcher with the Northwest National Marine Renewable Energy Center. His research interests include power electronics and control in high-performance motor drives and converter topologies applied to electric vehicles and renewable energy systems.

8: Proposed Monitoring and Adaptive Management

NNMREC proposes to perform the following monitoring studies for the proposed project. Adaptive management procedures are included in each plan. Monitoring and reporting protocols for marine mammal observations and pinniped haulout are provided in the Operations and Maintenance Plan (Attachment 4).

Benthic Habitat, Derelict Gear, and Entanglement

Acoustics

Electric and Magnetic Fields (EMF)

Benthic Monitoring and Adaptive Management

Title: Monitoring of benthic habitat, invertebrates, and fishes at OSU's ocean test facility

Principle Investigator: Sarah Henkel – Oregon State University, Northwest National Marine Renewable Energy Center and Hatfield Marine Science Center

Background: Pre-installation baseline sampling of benthic habitats and species was conducted at and around the proposed project site from May 2010 to December 2011. After exploratory video sled surveys in May 2010, sample stations were established on a regular grid. Twelve stations were established: two transects north of Yaquina Head, two transects south of the Head, and stations at approximately 30, 40, and 50 m on each of the transects. These transects are designated as (north to south): BB (Beverly Beach), MB (Moolack Beach), NH (Newport Hydrographic Line), and NS (Newport-South). All 12 stations were sampled ~bi-monthly for sediment and infaunal organisms using a box corer. For beam trawl surveys, only 9 stations were sampled on each visit. Those stations along the southern-most transect lie at the edge of a reef, and it is too risky for the net and the reef organisms to sample those stations. Video footage from the beam trawl was effectively captured in summer months; winter videography (attempted in February 2011) did not yield useful footage. Although not a primary objective of the videography, evidence of derelict gear did not show up on any of the transects. Wayward crab pots and research gear are anticipated to be the predominate type of derelict gear in the test area.

Project Description: The proposed project site is located approximately on the MB sampling transect in 45 m of water, so it will be in between the 40 and 50 m sampling stations on that line. Post installation monitoring at the NNMREC Ocean Test Site for assessing interactions with benthic habitats and species will be carried out in much the same manner as pre-installation baseline sampling. Table 1 indicates the pre-installation sampling already conducted (**black text**) and planned future monitoring, generally at the permitted site and for the 2012 test (**blue text**).

Table 1: Sampling visits and gear types.

	Box Core	Trawl	Trawl Video	Lander Video
June 2010				
August 2010				
October 2010				
February 2011				
April/May 2011				
June 2011				

	Box Core	Trawl	Trawl Video	Lander Video
August 2011				
October 2011				
December 2011				
June 2012				
August 2012				
October 2012				

We will visit the site in June 2012, once more prior to deployment since it will have been 6 months since our last visit. After the Ocean Sentinel instrumentation buoy and WEC device (WET-NZ) are deployed in July, we will visit the site again in August 2012 for an assessment while the devices are operational. Weather permitting, we will again visit the site after the Ocean Sentinel instrumentation buoy and WEC device (WET-NZ) are removed to assess if there are 'decommissioning' effects or if site characteristics are similar to pre-test conditions and/or baseline observations. Sample collection and data analysis methods are described in detail below.

Sample Collection Methods

i. **Box core.** One box core will be taken at each beam trawl station. The box core is a 0.1 m^2 modified Gray-O'Hare box corer. Upon landing the corer, a subsample of sediment from the undisturbed surface will be collected and preserved for grain size and total organic carbon analysis. The sample will then be sieved onboard through a 1 mm mesh screen; samples will be stained and preserved for later identification and enumeration. Samples will be sorted into major taxonomic groups by lower level staff; these major taxonomic groups will be weighed for biomass determination. The laboratory manager will identify the echinoderms and molluscs to species and crustaceans and polychaetes to family (lower if possible).

ii. **Beam trawl with mounted video camera.** The beam trawl is 2 m wide by 0.5 m high with 20 mm wall netting and 3 mm cod end netting. The duration of beam trawls will be kept to 10 min from contact with bottom to retrieval. We will collect and preserve (freeze with dry ice and store at -20 ^{o}C) fish and invertebrates from the net catches for later taxonomic identification. In the laboratory, all fish will be analyzed for size and morphometric body condition as well as their gut contents identified. This will enable us to investigate if the condition of the fish or their feeding habits has changed from what we observed in our 18 months of pre-installation baseline monitoring. Invertebrates will be sorted to species and each species' biomass determined. Videos will be viewed to determine the densities of sessile and mobile invertebrates (e.g. sea pens, crabs, sea stars) that are not well captured with the net.

iii. **Video lander (drop-video camera).** This is a sampling tool that was not used for baseline monitoring but will be valuable for assessing potential fish aggregating effects of anchors. The video lander is an

aluminum frame with two sets of video cameras with lights mounted on the frame. The two cameras are oriented 180° from each other so that they are facing opposite directions. The lander will be deployed at the 40 and 50 m stations on the BB and MB lines as reference locations as well as dropped near each anchor of the Ocean Sentinel (n = 3; ~45 m depth) and at each anchor of the WEC under test. The lander will be left on the bottom for a total of 15 minutes at each drop station. The number of each species or taxa of fish observed over time by each camera will be counted and the primary (mostly sand) and secondary (potentially anchor) substrate observed will be recorded. Counts will be compared to determine if more fish are observed at anchor locations than at reference locations and if more fish are observed by the camera facing the anchor than facing away. Since the anchors for the Ocean Sentinel are planned to be left in the water, video lander sampling of Ocean Sentinel anchors and reference locations will continue for the duration of the project, regardless if whether there is a WEC device under test. This sample method will also provide for monitoring of derelict gear that may become tangled on the anchors and animal entanglement. For derelict gear, the location (lat/lon in decimal degrees), type of gear, and condition (approximate size, line color, number and color of floats, if attached, presence or absence of pots or webbing) will be recorded. For entanglement, the species, its condition of entanglement and location will be recorded.

iv. **CTD-DO with chl a, and alkalinity.** We will sample properties of the full water column with a SeaBird CTD profiler (SBE 25) with DO (SBE 43), pH, transmissivity and chlorophyll a sensors at every sampling station on each visit.

Data Analysis

For species assemblage analyses (conducted separately for box core invertebrates, trawl invertebrates, trawl fishes, and video lander fishes), taxa for which there is just one individual collected/observed for the entire dataset will be removed so as not to skew the data based on rare species. Cluster analysis will be conducted on transformed density datasets for each assemblage in order to produce groups of similar stations based on species abundances. The SIMPROF routine will be run in Primer 6. This routine conducts a series of permutation tests to determine if clusters in a dendrogram have statistically significant structure. Samples within a cluster that cannot be significantly differentiated are considered to be a genuine group. The SIMPER procedure in Primer then will be used to identify species contributing most to similarities within clusters and differences between clusters. This analysis will be used to determine if there are unique communities within each assemblage found across the site. Analysis of the pre-installation collections indicated that there was strong spatial heterogeneity in the invertebrate collections that were stable over time. The spatial distributions of significantly different species groups from the post-installation surveys will be compared to the pre-installation surveys. Analysis of the fish data from pre-installations collections did not elucidate any spatial patterns of species presence or abundance; thus it will be interesting to see if we observe spatial differences in fish distributions post-installation. There was however, strong temporal variability in species present across seasons. We will determine if those patterns are consistent post-installation.

Multivariate analysis of the combined pre- and post-installation datasets will be conducted in Primer. Multidimensional Scaling (MDS) will be used to analyze the transformed density data to examine species composition and proportions across stations. MDS is an ordination technique where a small number of axes are selected prior to analysis and data are fitted to those dimensions, Data will be displayed in MDS plots such that samples that form a genuine cluster, as determined using the SIMPROF routine, have the same symbol on the plot. Thus, we will be able to visually determine if samples from the same season before and after installation cluster together or if post-installation samples are significantly different from pre-installation. Following MDS analysis of the organism data, the BEST function in Primer will be used. The BEST function is based on the BIO-ENV procedure, which uses all the available potential 'explanatory' (usually environmental) variables to find the combination that corresponds best to the patterns in the biological data. A correlation value is given for each comparison of the biological assemblage patterns and every combination of environmental variables. We will include a binary factor indicating pre- or post-installation in the environmental matrix in order to determine if that factor contributes to observed distinctions among collections.

In addition to multivariate analyses at the species level, we will compare our observations of infaunal invertebrates and fishes to longer time series by comparing summary statistics. The US Army Corps of Engineers (USACE) samples the dredge spoils from Yaquina Bay for infaunal invertebrates and occasionally fishes. The location of the North Disposal Site and sampling area falls within the NNMREC sampling area (Figure 1); thus we are able to compare densities of major taxonomic groups (Polychaetes, Molluscs, Crustaceans, Echinoderms) to the USACE to expand our reference dataset, enabling us to put post-installation observations in the context of longer term, inter-annual trends and variability. Various Oregon State University researchers have been sampling flatfish along the MB and NH transects at various time since the mid-1970s. While direct density comparisons may not be possible due to differences in gear types, we will compare the relative abundances of different flatfish species in our pre- and post-installation observations to those observed over the past few decades.

Drop camera footage will be viewed to determine if more fish are observed at anchor locations than at reference locations and if more fish are observed by the camera facing the anchor than facing away. Derelict gear and incidents of entanglement will also be recorded if found on the footage.

Reporting

Following each WEC test, a summary report of the pre-, during-, and post-test surveys will be prepared and submitted to NMFS and ODFW for review of both sampling procedures and findings. The report will include findings related to derelict gear and animal entanglement. This reporting will be in compliance with NNMRECs Mobile Ocean Test Berth Operations and Maintenance Plan, Section 9: Marine Mammal Consideration, Reporting Protocol for Injured or Stranded Marine Mammals. The presence of derelict gear itself will be reported to the Oregon Department of Fish and Wildlife. If marine mammal entanglement is observed the Oregon Marine Mammal Stranding Network, which is based at the Hatfield Marine Science Center, will be contacted as well.

The approach described above is that which will be used for the NNMREC Ocean Test site, generally, as well as what is proposed for the 2012 test, which will commence in July 2012. Changes to the timing of deployment for future tests may necessitate slight changes to the sampling schedule. Study plans for the following year and subsequent tests will be submitted to NMFS and ODFW, particularly in the event that any changes from the previous sampling are proposed. If adaptive measures are planned (see below), they will be reflected in the report.

Adaptive Management

We believe it will be difficult to detect measureable changes in most of the sampled populations due to effects of the Ocean Sentinel and a single WEC device test. The 'baseline' sampling for the Ocean Power Technologies project off Reedsport, OR, is scheduled to commence when they have the first buoy in the water, as this is still considered 'pre-installation', and no measureable changes are expected with the deployment of the single buoy. Thus, for benthic monitoring at the NNMREC Ocean Test site, there are few scenarios we can anticipate that would trigger a change in sampling strategy or test operations based on benthic changes.

If monitoring shows that derelict gear has become ensnared or collected on any Project structure, the NNMREC Ocean Test Facility Manager will be notified by the NNMREC scientist to review the footage and evaluate whether the gear has the potential to endanger the safety of species and/or the devices in the area. This may include taking additional photos or footage to characterize the gear more, if necessary. Action will depend on the severity of the derelict gear entanglement and the risk the gear poses to the safety of the test or entanglement of animals. If the gear poses no threat to safety or animals, it will be removed during removal of the project. Gear removal planning and coordination will be initiated by the Ocean Test Facility Manager if deemed appropriate.

Acoustic Monitoring and Adaptive Management

Title: Short-term acoustic assessment of wave energy conversion at OSU's mobile ocean test berth

Principle Investigators: Joe Haxel, Robert Dziak, and Haru Matsumoto – Oregon State University/ Cooperative Institute for Marine Resources Studies (CIMRS)

Background: Continuous long-term passive measurements of ambient sound levels (1 Hz – 2 kHz) have been collected from March 2010 – April 2011 at two sites within the project area, providing a characterization of background acoustic levels (*Haxel et al., in press & in prep.*) over a range of sea states and environmental conditions. Ambient sound in the ocean is composed of a complex amalgam of sources. Despite prior knowledge of probable sound sources within an oceanic region, a distinguishing characteristic of marine ambient sound is that no individual signal dominates or can be readily identified within the received field. Analogous to the background "hum"emanating from a large city, ambient sound in the ocean is the background sound resulting from remote and near-fieldcontributions of a multitude of anthropogenic and naturalsources. At the MOTB site, the ambient noise field consists primarily of sounds emanatingfrom breaking waves, winds, vessel traffic, marine mammals, and fish.

Root mean square (rms) maximum and minimum total sound pressure levels (SPL_{rms}) from the 1Hz-2kHz band calculated over 1 minute intervals during the experiment reached 136 dB re 1 µPa and 95dB re 1 µPa respectively. Meanwhile, the time averaged SPL_{rms} value for the year-long deployment was 113 dB re1µPa.

$$SPL_{rms}\ (\text{dB re } 1\mu\text{Pa}) = 20 \log_{10}(p_{rms}/p_{ref})$$

Peak SPL_{rms} values were encountered during heavy surf conditions recorded at a nearby offshore NOAA NDBC buoy (http://www.ndbc.noaa.gov/station_page.php?station=46050).

Underwater sounds generated by the operations of the instrumentation buoy (Ocean Sentinel) and wave energy converter (WET-NZ) this summer (2012) are expected to contribute to the local noise budget. The purpose of this study is to provide a rapid measurement of the maximum, root mean square (rms), and minimum absolute sound pressure levels (SPL) received at a range of 10 m – 200 m distance from the WEC device. These observations will provide the necessary information to evaluate the acoustic impact of the operational WEC on marine mammals based on NMFS criteria for harassment (120 dB) and injury (160 dB).

Project Description: The methods and instrumentation will be similar with techniques used by Bassett et al. (*in press*) to perform a similar evaluation of a WEC in Puget Sound operated by Columbia Power Technologies. Unlike the drifter used in the Bassett et al. (*in press*) study, we propose to deploy a calibrated cabled hydrophonefrom a vessel. Each recording will begin and end ~200 m up and down

drift of the WEC device. The hydrophone will be dropped to ~10 m below the sea surface and the vessel's engines will be shut down in order to eliminate noise contamination. The calibrated hydrophone system will record continuously at a sample rate of 50 kHz, providing reliable power spectral density estimates up to 20 kHz. A series of 4 drifts will be made past the WEC device during each recording cruise session.

Initial baseline near surface acoustic recordings using the protocol outlined above will be performed in May 2012, prior to any installations at the project site. These baseline measurements will provide background for comparison of operational acoustic transmissions from the WEC, as well a test of our recording procedure prior to WEC installation and operation. Additionally, these initial recordings may indicate pre-existing ambient sound conditions above NMFS threshold criteria prior to project activity. A subsequent recording cruise mission will be carried out after the WEC device has been deployed and is in operation.

Reporting: Data from each recording session will be processed and analyzed in a timely manner to provide NMFS and ODFW personnel with the necessary received SPL measurement information in order to assess acoustic levels produced by the WEC test.

Adaptive Management: Upon review of the initial results, and in coordination with NMFS and ODFW, NNMREC scientists may recommend further recording or no further recording upon satisfactory completion of the acoustic monitoring of the WEC test.

If confirmed testing indicates that sound levels are above Level A (180dB SPL for cetaceans and 190dB for pinnipeds) or Level B (120dB SPL) harassment threshold criteria, and that the sound levels are attributable to the WEC test, NNMREC scientists and the Ocean Test Facility Manager, in coordination with NMFS and ODFW, will determine the appropriate action. Action may include:

- Further recording to confirm acoustic pressure levels;
- Modifying the operation of the WEC or Ocean Sentinel;
- Ceasing operation and performing necessary modifications to minimize noise levels. Testing would be conducted to verify that the noise associated with the test has been abated; and/or
- Applying for an Incidental Harassment Authorization.

<u>Schedule:</u>

May 2012 – Baseline recording

July 2012 – Initial recording of WEC (as close as possible to the installation date). Initial results provided within 1 week.

August 2012 – Continued recording of WEC (if necessary)

Figure 1: Map of project area. Repeat sampling locations are indicated with blue pins. The Ocean Test Facility project area is indicated by the light blue box. The planned location for the first test is indicated with the red star. US ACE dredge spoils sampling area is indicated by the white outline.

EMF Monitoring and Adaptive Management

Title: Electric and Magnetic Field (EMF) Monitoring of WET-NZ 1/2 scale Wave Energy Generator at NNMREC Ocean Test Facility

Principle Investigator: Dr. Adam Schultz, College of Earth, Ocean and Atmospheric Sciences, Oregon State University, Corvallis OR 97331-5503

Proposed Project Start Date: 1-April-2012

Proposed Project Duration: 24 months

Summary

The proposed project involves deploying the WET-NZ ½ scale wave energy converter (WEC) with the Ocean Sentinel instrumentation buoy at the Northwest National Marine Renewable Energy Center (NNMREC) Newport test site offshore Yaquina Head, Oregon. Deployment of the Ocean Sentinel and the WEC unit is planned for July, 2012. We propose to carry out measurements of electric and magnetic fields on the seafloor within and adjacent to the test site during periods when the Ocean Sentinel and WEC are installed and energized. To characterize background, baseline EMF levels, we propose to carry out measurements of EMF during periods when the devices have been removed.

EMF monitoring is not a yet a fully defined science for marine renewable energy applications, and mission-specific instrumentation is needed for the industry. OSU is in the process of developing this instrumentation and will be applying it for the first time to this project in an experimental mode. The National Science Foundation (NSF)-supported National Geoelectromagnetic Facility (NGF) at Oregon State University, led by the PI of this proposal, operates the US national academic instrument pool for terrestrial geoelectromagnetic instruments. The NGF pool currently consists of 46 transportable long-period magnetotelluric (magnetic and electric field) geophysical measuring instruments, as well as 7 such instruments that are permanently deployed at sites across the continental US. The NGF is also currently constructing the first 10 geoelectromagnetic instruments of a new type – termed "ultra-wideband". This collection of instruments is used extensively in geophysical investigations on land, both to image the electrical resistivity structure of the Earth's shallow near surface, crust and mantle, and to characterize both natural and anthropogenic electric and magnetic fields (EMFs).

Under Oregon Wave Energy Trust support, the PI of this proposal collaborated with M. Slater of SAIC in construction of a first generation marine EMF sensing platform that was a marine adapted direct offshoot and functional copy of the NGF ultra-wideband instruments that the PI developed under separate NSF support, in collaboration with Zonge, International, Inc. In July 2010, this instrument was successfully used by the PI, NGF technician A.T. Peery and M. Slater, to detect EMFs on the bottom of Yaquina Bay Oregon. The NGF team induced an artificial EMF in a buried,

submerged pipeline under the bay by using a Zonge International, Inc., controlled source electromagnetic generator connected to the pipeline. In addition to detecting the location of the buried pipeline, this team also characterized the background natural and anthropomorphic EMFs at the waterline and on the seafloor in Yaquina Bay.

In 2011, under Oregon State University support, and with contributions from Zonge International, Inc. (and more recently through additional NNMREC/DOE support), the PI began the development and construction of a more advanced, 2nd generation "multi-physics bottom lander" (MPBL) system that incorporates a significantly improved EMF sensor package, a wideband ocean bottom seismometer, auxiliary sensors including pressure, accelerometers, etc., capabilities for acoustic telemetry of sensor data from the seafloor to a surface vessel, a trawl resistant cowling to protect the instrument from damage due to fishing activity, and the capability for autonomous deployment of the sensor platform from the deck of a ship and buoyant return of the platform to the surface, by acoustic command.

The MPBL has been carefully designed to characterize EMFs associated with Ocean Sentinel and WEC installations (and, with the addition of its ground motion sensors/seismometers/accelerometers, it is also well suited to environmental monitoring of offshore wind energy installations, as well as to a variety of marine geophysical investigations). The sensors have been designed following guidance found in Slater, Schultz, Jones and Fischer, *Electromagnetic Field Study* (2010), Oregon Wave Energy Trust (346 pages).

The MPBL system consists of an EMF sensor package in a trawl-resistant conical capsule approximately 2m in diameter and 1.5m tall. The lander is hoisted overboard using a vessel-mounted winch at the locations indicated in the survey lines. After approximately 10-20 minutes of recording, it is winched back on to the vessel to be deployed at the next location. Operating in this deployment mode, a single MPBL can be used to characterize the EMF signature of a WEC/Ocean Sentinel installation. In future, the MPBL will also be configurable for an autonomous long-term monitoring mode, where it is deployed at a fixed position on the seabed to monitor EMFs and other environmental parameters over periods of days-to-weeks or longer.

The magnetic field sensors have been custom developed for the MPBL, with a noise floor of approximately 0.05 pT/√Hz at 1 Hz and 0.002 pT/√Hz at 50 Hz (where 1 pT = 10^{-12} Tesla). The Earth's magnetic field intensity as measured by a compass is about 50,000 nT (1 nT = 10^{-9} Tesla). In addition to their extraordinary sensitivity, the MPBL's magnetic field sensors have a flat frequency response from 0.1 Hz to 1 kHz, which makes them ideally suited to detecting even extremely small levels of 50/60 Hz power line noise at the fundamental frequency and its significant harmonics.

We have also developed a custom marine electric field detection system that is matched to the sensitivity of the magnetic field sensors, and both electric and magnetic field sensors detect both the amplitude and the direction of the EMFs, which is critically important during a survey in discriminating between several geographically disparate sources of EMFs (i.e. to determine which

cable/installation is the origin of a given signal at a given location). These sensors have been coupled to the first portable, low power geophysical data acquisition system employing a digitizer with 32 bits of precision, providing the ability to digitize the MPBL's sensor signals with extraordinary fidelity (e.g. with a signal-to-noise ratio of 3.2 million:1 for signals at 250 Hz). This extended fidelity is important in efforts to detect the sometimes-subtle EMFs of interest that may be otherwise overwhelmed by signals (natural and anthropogenic) that may come from other sources such as the shore-side power grid.

Such a degree of sensitivity to, and ability to distinguish the sources of, EMFs is required if we are to match the known and postulated electro- and magneto-sensitivity of indicated species, some of which are endangered within this range, as detailed in Slater, et al (2010). That report also indicates that with appropriate conditions (bathymetry, seafloor rock type), it is possible for electrically resistive sub-seafloor geologic formations to act as a type of waveguide, extending the distance range over which potentially biologically significant EMFs may propagate, relative to the more rapid attenuation of such fields in electrically conductive seawater. It is therefore necessary to carry out a program of EMF monitoring of WEC sites in order to characterize background and induced EMFs from such installations. Ideally such monitoring efforts will be coupled with numerical modeling of EMF propagation using a realistic 3D model of the electrical resistivity structure of the seafloor, water column and coastline.

Our current development plan calls for completion of the data acquisition, power supply, magnetic and electric field sections of the MBL, and fabrication of a survey frame to mount these components to so they are field deployable for pre-deployment acceptance testing in Yaquina Bay Oregon, by early August 2011.

Proposed EMF Monitoring

We propose to carry out two EMF surveys within and immediately surrounding the NNMREC ocean test site. It will be necessary to map the seafloor EMFs surrounding the Ocean Sentinel/WEC installation when that system is operational and energized, and also to repeat the survey after the Ocean Sentinel/WEC system has been removed or powered down. Given the MPBL's acceptance testing schedule, we propose to begin monitoring operations in August 2012, while the Ocean Sentinel/WEC is in its energized configuration. Following its removal and before any new deployments of the Ocean Sentinel take place during the spring/summer of 2013, we will return to ocean test site and repeat the survey to obtain baseline EMF measurements.

During each survey, we plan to acquire data using a 4 kHz sampling rate, so we may resolve power line frequencies up to the 16th harmonic (960 Hz) of the 60 Hz fundamental frequency and beyond. The survey will be capable of detecting both AC EMFs originating at the WEC generator (at ocean swell frequencies of ~0.07 Hz and harmonics, as well as at 60 Hz power line frequencies and harmonics) as well as DC power line transmission related electric fields that might arise in the event of faulty/damaged/cutcable insulation or connector failures.

Survey Configuration

Our survey configuration is shown in Figure 1 below.

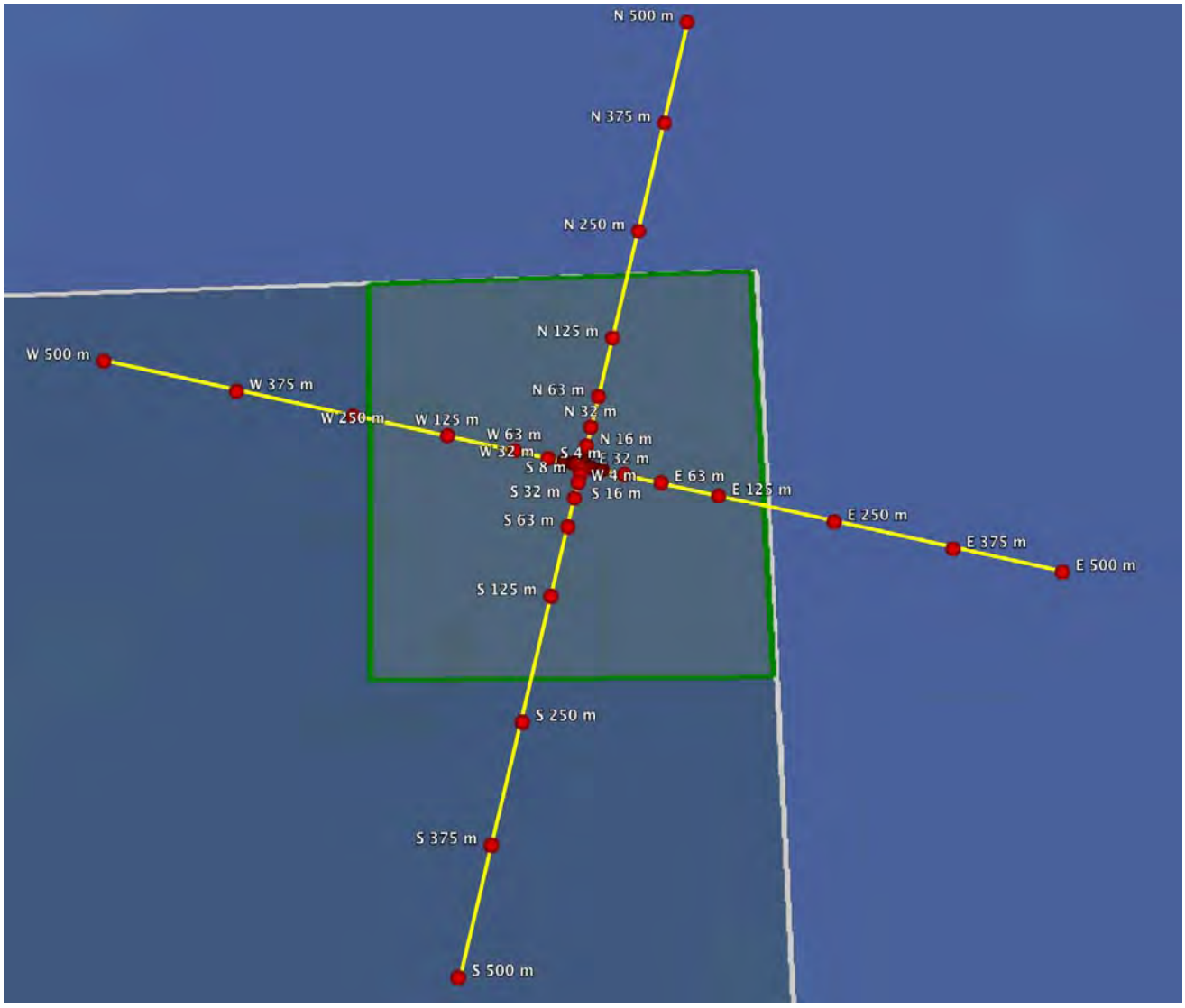

Figure 1. Each seafloor EMF measurement station is shown as a red dot lying along either an N-S or E-W (magnetic coordinates) survey line. Survey locations are found 4m, 8m, 16m, 32m, 63m, 125m, 250m, 375m and 500 m radially outward from the array center, in each of the four cardinal magnetic directions.

This survey configuration will be repeated twice: first in August 2012 while the Ocean Sentinel/WEC system is positioned and energized, and again in the spring/summer of 2013 when it has been removed and prior to redeployment. In the event of delays on the part of the WEC or Ocean Sentinel operators in deploying the system, we will adapt our schedule accordingly, reserving the ability to carry out all survey in 2013 if required. During each of these surveys the ship (the 53'

Oregon State University coastal research vessel R/V Elakha) will deploy the EMF sensor platform on the seafloor at the positions indicated in Figure 1 (red dots), using the vessel's winch. The positions will be navigated with reference to GPS.

Thirty-six (36) separate survey stations are identified in Figure 1. Two 1-km long survey lines are shown. All directions are with reference to Magnetic North, a direction that in this location is close to parallel to the coastline and to lines of constant bathymetry. The first survey line is oriented to magnetic north-south and the second orthogonal line is oriented to magnetic east-west. The two lines cross near the center of the Ocean Sentinel/WEC installation midway along the umbilical between the Ocean Sentinel and WEC.

The EMF surface array is designed to tighten spacing between stations geometrically as the center of the array, i.e. the Ocean Sentinel/WEC installation is approached. Field intensity will increase geometrically with proximity to the signal source, so tighter station spacing is required closer in, while sparser EMF sampling is appropriate at greater distances. In addition to stations obtained along the cardinal directions (an approach that also increases ease of survey navigation and operational efficiency), as time allows additional EMF stations will be acquired within each of the quadrants bounded by the survey lines.

It is appropriate to monitor EMFs using such an array configuration to account for bathymetric effects on EMF propagation, and for the possibility that shallow sub-seafloor geology structure may vary in three dimensions, leading to non-uniform EMF propagation with distance from the Ocean Sentinel/WEC installation. The 500 m radius of the survey footprint allows for capture of EMFs that may have propagated along buried geologic waveguides. Experience from studies of induced EMF propagation along such waveguides, a phenomenon used in the oil industry to characterize marine oil/gas reservoirs, provides a rule of thumb: the propagation of induced EMFs due to an "electric dipole" source of a given length can be detected approximately ten dipole lengths distant, if a geologic waveguide is present. The length of the power transmission line between the Ocean Sentinel and the WEC is approximately 50 m, thus the EMF rule of thumb suggests we should monitor EMFs to distances of up to 500 m radially from that cable. In the absence of such a waveguide, we would expect much more rapid attenuation of EMFs with distance from the center, thus the denser station spacing closer in, with stations as close as practical to the center point of the cable (minimum distance to be determined by the Ocean Sentinel manager and the Elakha's captain given prevailing winds and currents. The closest stand-off distances illustrated in Figure 5 are subject to change).

EMFs are best measured from a stable platform of the seafloor. The motion of the sensor platform dragged through the water column leads to a series of technical complications. Such a scenario would move the sensor package through the Earth's magnetic field lines, inducing an electric field that is an artifact of that motion. The platform would also pitch and yaw, changing the orientation of the sensors with respect to the EMFs being measured. Such motion would need to be carefully

logged so the measured EMFs could be numerically rotated into constant orientation coordinates. Finally the motion of seawater across the electric field sensor electrodes would create “streaming potentials” that lead to spurious electric field measurements. Given these complications, it is preferable to execute the survey as described above, i.e. as a series of stable bottom station measurements.

Reporting

Post monitoring data analysis will take on the order of 90 days. The results will be written up in a short monitoring summary and transmitted to NMFS and ODFW for review.

Adaptive Management

The EMF results will be compared with known values for impact on endangered species known or likely to be present in the area. If the results indicate that WEC-related EMF levels are within the documented magnetic or electric field sensitivity range of such species, NMFS, ODFW, OSU scientists and the Ocean Facilities Manager will work together on an approach to reduce EMF levels during a test. In the event that the monitoring shows EMF signatures at levels below concern, and after consulting with NMFS and ODFW, the EMF monitoring program will be modified accordingly.

9: Environmental Baseline Studies

The following baseline studies are enclosed, as follows:

Baseline Acoustics Measurements

Baseline Benthic Characterization

Obtaining baseline measurements of ocean ambient sound at a mobile test berth site for wave energy conversion off the central Oregon coast

J.H. Haxel, R.P. Dziak, H. Matsumoto
Cooperative Institute for Marine Resource Studies Oregon State University
and NOAA Pacific Marine Environmental Laboratory
Newport, OR USA
joe.haxel@oregonstate.edu

***Abstract*— A year-long experiment to monitor underwater ambient noise measurements in shallow, (~50m) open water along an energetic coastline in the Pacific Northwest (USA) was conducted. Bottom mounted passive acoustic recorders were deployed in March 2010 by Oregon State University (OSU) and NOAA/Pacific Marine Environmental Laboratory's Marine Acoustics Research Group in an area designated by the Northwest National Marine Renewable Energy Center (NNMREC) as a mobile ocean test berth (MOTB) site for wave energy conversion (WEC) platforms off the central coast of Oregon. Acoustic recording packages recorded continuous (1 Hz-2 kHz) sampling at two offshore locations near and within the MOTB. Maximum and minimum total sound pressure levels recorded during the experiment reached 136 dB re 1 µPa and 95 dB re 1 µPa respectively. Meanwhile, the time averaged sound pressure levels for the year long deployment were 113 dB re 1µPa. These data provide the initial baseline recordings required for a meaningful assessment of the shallow water ambient noise levels in the Oregon nearshore coastal environment prior to the installation and operation of wave energy conversion devices.**

***Keywords*- wave energy conversion, ambient sound, hydroacoustics**

I. INTRODUCTION

Recently, the coastal waters of the Pacific Northwest have been thrust to the forefront as a premier regional candidate for wave and tidal energy development in North America. This has prompted an urgent need for critical baseline measurements necessary for assessing potential impacts of wave energy conversion devices on marine ecosystems. Ambient underwater sound level is a fundamental parameter for assessing the environmental health of an ocean region. Long-term deep ocean acoustic baseline ambient noise levels in the Northeast Pacific have been well documented [1-4]. Meanwhile, ambient noise levels in Oregon's shallow coastal regions have been neglected in the absence of long term acoustic measurements. The high energy environment of the coastal zone in conjunction with intense fishing activity presents a suite of challenges for the deployment, survival and recovery of passive acoustic moorings in Oregon's coastal waters. This paper provides a description of the first long-term experiment collecting shallow water acoustic measurements in Oregon's nearshore zone.

II. SITE CHARACTERIZATION

Since 2009, NNMREC has been working with the wave energy conversion industry, local communities, federal and state agencies and the fishing industry to identify an area off the central coast of Oregon as a suitable site for the MOTB (Figure 1). The MOTB is near the Port of Newport to support deployment and maintenance of the WEC platforms. As a result, the area experiences heavy seasonal ship traffic associated with both commercial and sport fishing activities. The gently sloping seafloor within the area primarily consists of beach sands with small interspersed patches of cobble and mud.

The MOTB site also encompasses a significant portion of the transitory gray whale migration route, (~19,000 animals) [5, 6] along the Oregon coast making this area critical marine mammal habitat. Other marine mammals such as Humpback whales, Harbor porpoise, California sea lions and harbor seals are also frequently observed within and around the MOTB site.

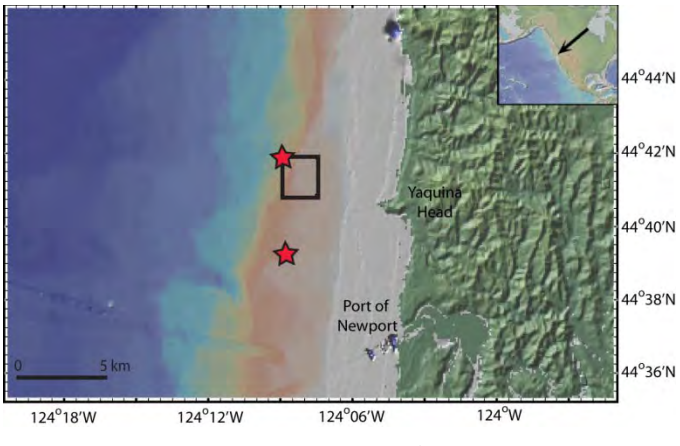

Figure 1. Map showing the locations (red stars) of the NW and SW passive acoustic lander mooring stations. The black rectangle indicates the NNMREC based mobile ocean test berth.

III. Mooring Design and Instrumentation

The original aluminum hydrophone lander frame was designed (Figure 2a & 3a) with a square outline, including angular corner welds at the leg and upright intersections to protect the mounted instrument and recovery system. Due to increased concerns over potential damage from bottom fishing and trawling activities, the initial lander design evolved into a circular shape with a continuous curved aluminum frame (Figure 2b & 3b), thus providing enhanced protection from encounters with trawling and fishing activity. In addition, the new design incorporated stronger welds at the lift point near the top of each lander. A set of 1.25 cm diameter holes were drilled in the uppermost portion of each lander frame to allow for air to escape as the frames were submerged during deployments. The horizontal footprint of each lander frame was 1.93 m and each had a vertical profile of 1.78 m. The 25 kg frames were anchored to the seafloor with ~22 kg concrete weights attached to each of the four legs in addition to either one or two 45-kg autonomous hydrophone instruments for a total in water weight of approximately 155 or 200 kg depending on the particular deployment. Additionally, an ORE Offshore Coastal Acoustic Release Transponder (CART™) Pop-Up Buoy recovery system with 75 m of ¼ inch Spectra™ recovery line was mounted on each lander. The Pop-Up system consists of entirely subsurface mooring components, thus avoiding line strumming under ocean currents as well as hardware noise associated with an attached surface buoy.

Each lander deployment was outfitted with a custom, continuous low frequency (1 Hz - 2 kHz) acoustic recording package. In addition, the SW mooring station deployment was equipped with an AURAL-M2™ recorder manufactured by Multi-Electronique, sampling at 10 Hz – 16 kHz on a 90 minute duty cycle with 60 minutes active logging duration. The second deployment at the NW mooring station was also equipped with an AURAL-M2™ set for continuous sampling in the 10 Hz – 32 kHz frequency range. Both hydrophone instruments are 16 bit systems. The previously described station and sampling information is summarized in Table I.

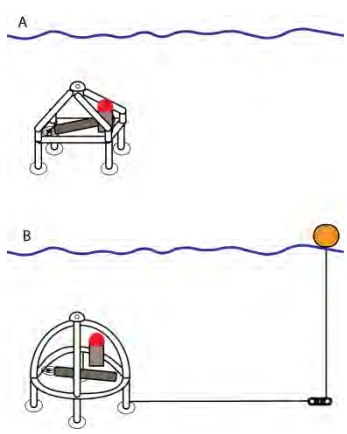

Figure 2. Schematics of **a)** the original passive acoustic lander mooring used at the NW monitoring station of the MOTB with no surface expression and **b)** the second generation lander mooring deployed at the SW station and second NW deployment.

This work was funded by the U.S. Department of Energy, the Oregon Wave Energy Trust, and Oregon State University

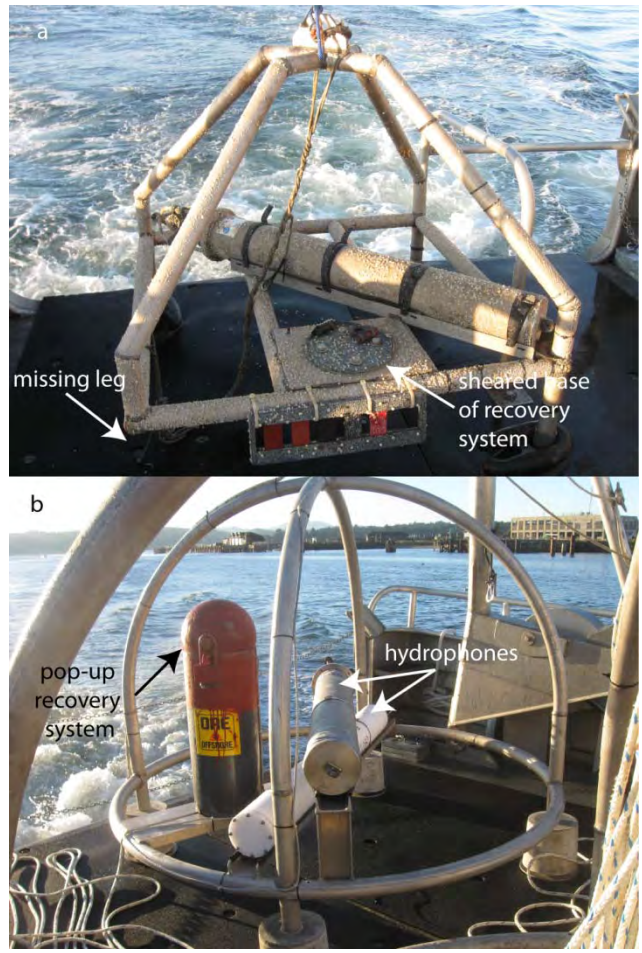

Figure 3. **a)** The original lander mooring frame recovered by a mini-ROV operation at the NW monitoring station after 7 months in the water. Note the sheared base of the pop-up buoy recovery system canister and missing base leg. **b)** The second generation of lander frame prior to deployment showing the two hydrophone instruments and Pop-Up Buoy recovery system.

The low frequency hydrophone instrument consists of a custom-designed 16-bit data acquisition system housed in a titanium pressure case. Passive acoustic signals are measured by an ITC hydrophone model ITC1032 with sensitivity 192.3 dB-V/μPa. The signal is pre-whitened and passed through a frequency-dependent gain pre-amplifier to equalize the ambient noise and to optimize for the dynamic range prior to analog to digital conversion by the acquisition and recording components. The following analysis will focus solely on the continuous low frequency (1 Hz - 2 kHz) instrument and data.

TABLE I. Mooring Details

Station ID	Dates Deployed Recovered	Recording Packages	Mooring Type
NW	Mar.20,2010 Oct. 15,2010	1Hz-2kHz	No surface buoy
SW	Sep.2,2010 Oct. 15,2010	1Hz-2kHz 10Hz-16kHz	surface buoy
NW	Nov.23,2010 Apr. 8, 2010	1Hz-2kHz 10Hz-32kHz	surface buoy

IV. Deployment and Recovery operations

The initial hydrophone lander frame designed by OSU (Figure 2a) was deployed from OSU's 54 foot *R/V Elakha* at a depth of approximately 50 m on sedimented seafloor (44°41.8N/-124°08.9W) near the Northwest corner of the MOTB (Figure 1) on March 20, 2010. The experiment was planned to record data for a minimum of one year, including a mooring turn-around after six months, in order to capture seasonal variability in weather conditions as well as marine mammal habitat use and fishing vessel traffic [7]. During deployment operations, the lander frames were lowered through the ships A-frame with a cabled winch until reaching < 3 m from the seafloor. A quick release system was then triggered and the lander free fell to the bottom. An ORE AMD200R™ ship-based deck unit was used to communicate with the ORE CART™ acoustic release to ensure the lander was positioned in an upright position on the seafloor.

During the planned mooring turn-around cruise September 2, 2010, the acoustic release on the recovery system of the NW lander was in operation and reporting confirmed "released" messages in the absence of the Pop-Up buoy on the surface. With favorable seas (2-2.5 m) and light winds (1-5 m/s) a subsequent recovery operation on October 15, 2010 aboard the *R/V Elakha* using two VideoRay™ mini-remotely operated vehicle's (mini-ROV) piloted by Craig Thorngren of Submerged Recovery & Inspection Services (L.L.C.) was conducted. Using the ranging capability of the ORE CART™ acoustic release with the ORE AMD200R™ acoustic command deck unit, a best estimate of the position of the lander frame on the seafloor was obtained by minimizing range values as the ship ran a series of transects in the area. The first mini-ROV was deployed with a drop weight (2.5 kg) to get the vehicle on the bottom as quickly as possible. A small sonar unit mounted on the mini-ROV was able to image the lander frame at a horizontal distance of 20 m from the drop point. The mini-ROV was flown to the lander station through low visibility conditions and initial video was taken to assess the damage and problem with the Pop-Up recovery system (Figure 4e).

The lander frame had sustained significant damage (likely from a derelict Dungeness crabbing gear recovery mission) and had been moved roughly 50 m off station from its original position on the seafloor. The frame had lost one of its four base legs at the welded corner and the Pop-Up Buoy recovery system had been sheared at the base (Figure 3a), releasing the buoy and recovery line which were fouled and suspended above the lander frame. The mini-ROV was recovered, the sonar unit removed and then outfitted with a tool for grasping the fouled recovery line. The mini-ROV was deployed with another drop weight and the pilot connected the clamp tool to the large loop in the recovery line roughly 10 m from the seafloor. A second mini-ROV was equipped with a carabiner attached to a ship's lifting line and sent down the umbilical of the first mini-ROV which was attached to the lander frame via the loop in the recovery line (Figure 4a-d). The mini-ROV pilot hooked the carabiner through the loop in the lander recovery line using the second mini-ROV, while the recovery line was kept taut from ship based tension on the umbilical of the first mini-ROV. After nearly eight hours of ship and mini-ROV dive operations, the entire NW lander mooring including the lander frame, Pop-Up recovery system, and both mini-ROV's was successfully recovered through the A-frame by the ship's winch.

On the September 2, 2010 prior to the initial recovery attempt of the NW lander, a second acoustic lander mooring was deployed 4.86 km south (44°39.2N/-124°08.7W) of the NW station (Figure 1). The SW lander mooring consisted of the second generation design with a circular and curved frame (Figure 2b & 3b). In addition, this mooring was deployed with a 50 m ¾ inch nylon drag line connecting the lander frame to an 80 kg anchor. A 75 m piece of ¾ inch Spectra™ was used to moor a surface float from the anchor. This design was used to allow for an alternative method of recovery if the Pop-Up Buoy system was fouled. It was decided the potential for hardware noise and line strumming in the recordings were outweighed by instrument loss. Precautions were taken to insulate hardware and line connections to reduce mooring noise sources [8], but still some chain noise was recorded on the high frequency recorders above 1 kHz. The SW lander mooring was successfully recovered by its Pop-Up release system during the return to Port following the mini-ROV recovery of the NW lander on October 15, 2010. The goal of this short deployment was to provide six weeks of temporally overlapping and extended spatial coverage of the MOTB site in addition to the NW hydrophone lander.

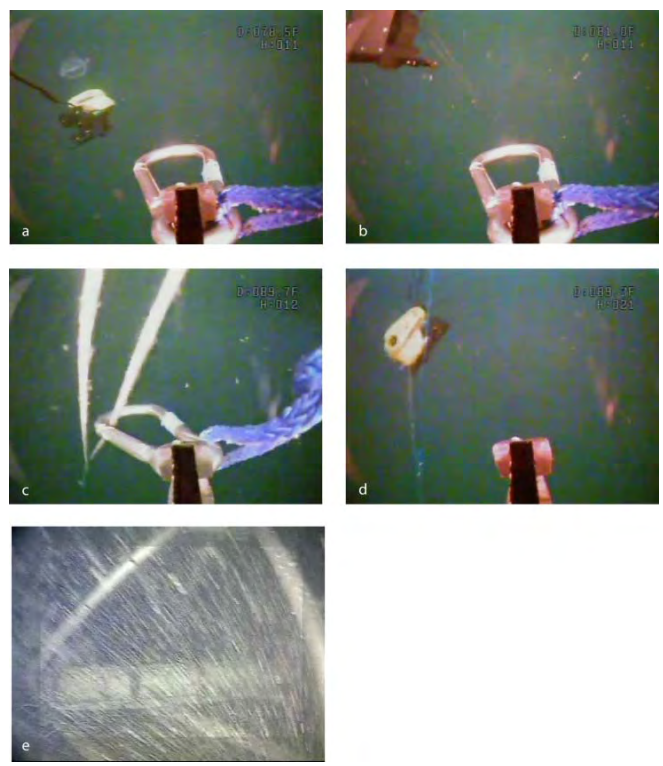

Figure 4. Images from the VideoRay™ mini-ROV recovery operation of the NW lander mooring. **a)** view from the second mini-ROV as it approaches the initial mini-ROV that is hooked into the fouled recovery line loop. **b & c)** the approach and connection of the carabiner with blue lifting line from the ship into the grey fouled recovery line. **d)** the second mini-ROV backing away from the first mini-ROV and recovery and lifting lines. **e)** the initial view of the damaged lander showing the low visibility conditions near the seafloor.

Lastly, the NW lander site was reoccupied on November 23, 2010 following nearly a month of hazardous weather. The second generation of lander design (Figure 2b) was also used for this deployment to insure redundancy in recovery capabilities. The second lander deployment at the NW station was recovered April 8, 2011 providing nearly a full year of continuous acoustic data at this shallow water area off the Oregon coast.

V. INITIAL RESULTS

Ambient sound in the ocean is composed of a complex amalgam of sources. Despite prior knowledge of probable sound sources within an oceanic region, a distinguishing characteristic of marine ambient sound is that no individual signal dominates or can be readily identified within the received field [9]. Analogous to the background "hum" emanating from a large city, ambient sound in the ocean is the background sound resulting from remote and near-field contributions of a multitude of anthropogenic and natural sources. At the MOTB site off central Oregon coast, the ambient noise field consists primarily of sounds emanating from breaking waves, winds, vessel traffic, marine mammals, and fish.

Prior to any comparative analysis, the hydrophone instrument response is removed from the pressure signal including the hydrophone element sensitivity and frequency response of the pre-amplifier. The total sound pressure level (SPL) from 1 to 2 kHz is calculated as the root mean square (rms) of the corrected pressure time series and is an important measure of the sound field across all of the recorded frequencies. The SPL is defined as:

$$\text{SPL } (dB\ re\ 1\ \mu Pa) = 20 \log_{10} (p_{rms}/p_{ref}) \qquad (1)$$

Figure 5 shows the distribution of total SPL values calculated at one hour intervals over the entire record length at the NW lander mooring station of the MOTB. A gap in the data exists from October 15 to November 23, 2010 as a result of previously mentioned hazardous weather and ship scheduling conflicts. The distribution of the total SPL values takes a Gaussian shape with a time averaged mean total SPL of 113 dB re 1 μPa. The maximum and minimum observed total SPL's were 136 dB re 1μPa and 95 dB re 1 μPa respectively. These values are much higher than the typical deep ocean noise found in the NE Pacific Ocean [4].

Although the total SPL is a valuable measure of the sound field across all of the recorded frequencies within the bandwidth, the SPL parameter lacks any spectral information. In order to compare the frequency structure of the sound field between the NW and SW lander stations, the corrected pressure level time series' must be converted to acoustic spectrograms (Figure 6). The time series' are segmented into discrete 2-second blocks with 0.5-Hz frequency resolution followed by the application of a hanning window function. To display in spectrogram form, linear power spectral density (PSD) calculations were then summed over hour long intervals and

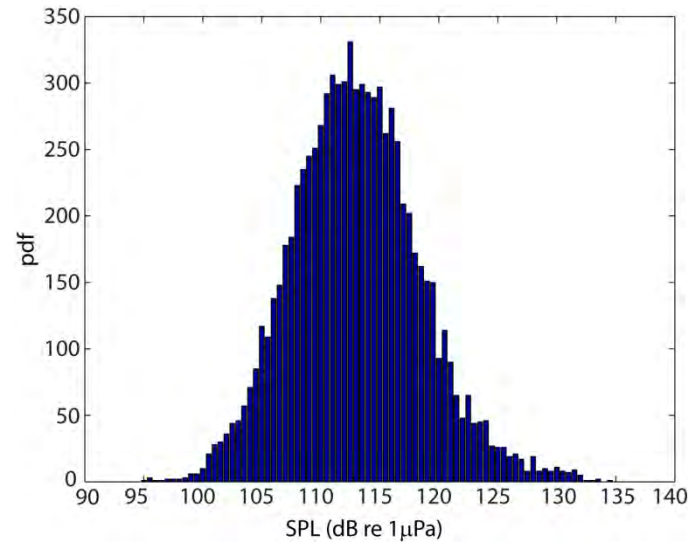

Figure 5. A histogram estimate of hourly total sound pressure levels (SPL) at the NW station of the MOTB from March 23, 2010 through April 8, 2011.SPL values follow a normal distribution with a mean of 113 dB.

cumulative spectra were converted to decibels with units dB re 1 $\mu Pa^2/Hz$.

The spectrograms show distinct periods of broad band noise that are visually correlated between the two stations (Figure 6). For instance, the period of increased broad band energy recorded September 5-6th is the result of increased vessel traffic in the area. Cross-correlation analysis of the total SPL time series' from each station indicates at the 95% confidence level that sound pressure levels are statistically correlated at an hourly time scale (ρ_{xy} = 0.14 with $\rho_{critical}$ = 0.06), suggesting high amplitude or persistent signals propagate strongly and are well observed within the MOTB at both station locations.

VI. CONCLUSIONS

Baseline ambient noise measurements are necessary to compare and quantify potential noise impacts of WEC installation and operation. These values are important for the WEC industry to determine the extent to which any noise introduced by a device may be detected above ambient levels [7] and contribute to the overall noise budget. At the NNMREC MOTB site off Newport, OR the time averaged mean total sound pressure level from a year long data set was 113 dB re 1μPa. The maximum and minimum observed total SPL's were 136 dB re 1μPa and 95 dB re 1μPa respectively. In addition, correlation analysis of SPL's from acoustic receivers moored 4.86 km apart in similar water depths provide evidence of high amplitude and persistent regional signals within the MOTB site.

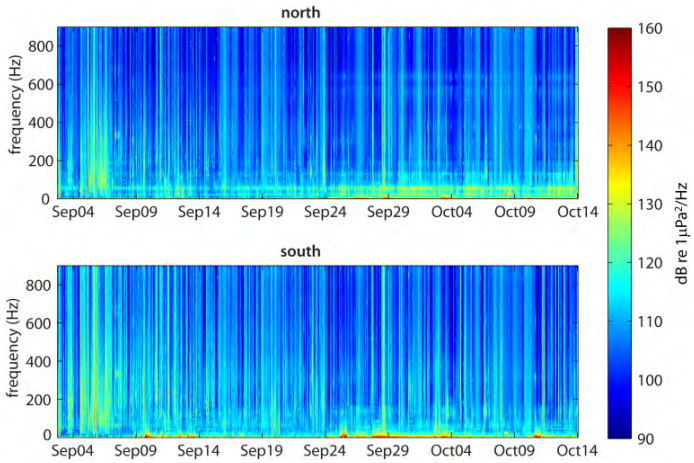

Figure 6. Spectrograms calculated from the hourly cumulative acoustic energy at the NW and SW moorings. Periods of high amplitude broad band energy are observed at both receivers which are separated by 4.86 km alongshore.

ACKNOWLEDGEMENTS

The authors would like to thank the Captain and crew of the *R/V Elakha* for mooring deployment and recovery operations as well as Craig Thorngren of Submerged Recovery & Inspection Services (L.L.C.) and Dennis Lancaster of Water Work Resources (L.L.C.) for a successful mini-ROV mooring recovery.

REFERENCES

[1] R. K. Andrew, B. M. Howe, J. A. Mercer, and M. A. Dzieciuch, "Ocean ambient sound: comparing the 1960s with the 1990s for a receiver off the California coast," *Acoustics Research Letters Online,* vol. 3, pp. 65-70, 2002.

[2] P. H. Dahl, J. H. Miller, D. H. Cato, and R. K. Andrew, "Underwater ambient noise," *Acoustics Today,* vol. 3, pp. 23-34, 2007.

[3] M. A. McDonald, J. A. Hildebrand, and S. M. Wiggins, "Increases in deep ocean anibient noise in the northeast pacific west of San Nicolas Island, California," *Journal of the Acoustical Society of America,* vol. 120, pp. 711-718, Aug 2006.

[4] K. R. Curtis, B. M. Howe, and J. A. Mercer, "Low-frequency ambient sound in the North Pacific: Long time series observations," *Journal of the Acoustical Society of America,* vol. 106, pp. 3189-3200, Dec 1999.

[5] D. L. Herzing and B. R. Mate, "Gray whale (*Eschrichtius robustus*) migrations along the Oregon coast," in *The gray whale, Eschrichtius robustus,* J. S. L. M.L. Jones, and S.L. Swartz, Ed., ed New York: Academic Press Inc., 1984, pp. 289-307.

[6] D. J. Rugh, R. C. Hobbs, J. A. Lerczak, and J. M. Breiwick, "Estimates of abundance of the eastern North Pacific stock of gray whales (Eschrichtius robustus) 1997-2002," *Journal of Cetacean Research and Management,* vol. 7, pp. 1-12, 2005.

[7] M. Austin, N. Chorney, J. Ferguson, D. Leary, C. O'Neill, and H. Sneddon, "Assessment of underwater noise generated by wave energy devices. Tech. Report prepared for Oregon Wave Energy Trust," 2009.

[8] K. M. Dudzinski, S. J. Brown, M. Lammers, K. Lucke, D. A. Mann, P. Simard, C. C. Wall, M. H. Rasmussen, E. E. Magnusdottir, J. Tougaard, and N. Eriksen, "Trouble-shooting deployment and recovery options for various stationary passive acoustic monitoring devices in both shallow- and deep-water applications," *Journal of the Acoustical Society of America,* vol. 129, pp. 436-448, Jan 2011.

[9] National Research Council (U.S.). Committee on Potential Impacts of Ambient Noise in the Ocean on Marine Mammals., *Ocean noise and marine mammals*. Washington, D.C.: National Academic Press, 2003.

Dec 11

Baseline Characterization and Monitoring of the OSU Mobile Ocean Test Berth Site

Benthic Habitat Characteristics and Organisms on the Central Oregon Coast

Prepared by
Sarah Henkel, Northwest National Marine Renewable Energy Center, Hatfield Marine Science Center, Oregon State University
On behalf of Oregon Wave Energy Trust

This work was funded by the Oregon Wave Energy Trust (OWET). OWET was funded in part with Oregon State Lottery Funds administered by the Oregon Business Development Department. It is one of six Oregon Innovation Council initiatives supporting job creation and long-term economic growth.

Oregon Wave Energy Trust (OWET) is a nonprofit public-private partnership funded by the Oregon Innovation Council. Its mission is to support the responsible development of wave energy in Oregon. OWET emphasizes an inclusive, collaborative model to ensure that Oregon maintains its competitive advantage and maximizes the economic development and environmental potential of this emerging industry. Our work includes stakeholder outreach and education, policy development, environmental assessment, applied research and market development.

Baseline Characterization and Monitoring of Oregon State University's Ocean Test Facility Site

Principle Investigator: Sarah Henkel in collaboration with Lorenzo Ciannelli and Jack Barth

This project was carried out collaboratively by Oregon State University (OSU) scientists and involved participation by Oregon Department of Fisheries and Wildlife and NOAA Northwest Fisheries Science Center scientists. The goal of this project was baseline characterization via observations and sample collection of the habitat and biological assemblages present at the future site of the Northwest National Marine Renewable Energy Center Ocean Test Facility near Newport, OR. Specifically, CTD casts, box core and beam trawl collections, and video observations were conducted at the site from spring 2010 to fall 2011. These collections and observations help characterize the baseline variability in habitat and species characteristics across seasons over two years. Below we summarize overall findings. In the following document we report on the spatial and temporal variability of the habitat features and biological assemblages. Finally, we review our participation to date in disseminating these results and outline plans for post-installation monitoring of the Test Facility site.

OVERALL FINDINGS

- Two distinct sediment types were found in the area proposed for the Oregon State University Northwest National Marine Renewable Energy Center Ocean Test Facility near Newport, OR: silty sand at approximately 30 m, and potentially shallower, and nearly pure sand at 40 m and deeper.
- Distinct infaunal invertebrate assemblages were found in the silty sand that were different from the deeper, sand stations.
- Distinct infaunal invertebrates assemblages were found north and south of Yaquina Head at the deeper stations.
- Fish species present in the area varied with season: flatfish dominated the summer catch, poacher abundances increased in the fall, and smelt abundances were high in winter.
- Mysid shrimp and *Crangon* shrimp were highly abundant and likely form the basis of the food web in this nearshore zone as opposed to the krill-supported food web further offshore.
- Videographic observations are challenging in this sedimentary habitat; however, it is a more effective tool for sampling large invertebrate species such as crabs, sea stars, and sea pens than the trawl.

Table of Contents

BACKGROUND 4

INTRODUCTION 4
- The Ocean Test Facility Site 4
- Sampling Sedimentary Habitat and Species 5

METHODS 7
- Site selection 7
- Box Coring 8
- Trawling 9
- Videography 10
- Water column sampling 11
- Flatfish Body and Feeding Condition 11
- Data Analysis 12

RESULTS 13
- Box Coring 13
- Trawling 17
- Videography 22

DISCUSSION 23
- Sediment and Infaunal Invertebrates 23
- Fish 24
- Epifaunal Invertebrates 25
- Videography 25

DISSEMINATION OF RESULTS AND FUTURE PRODUCTS 26
- Participation at OWET Ocean Renewable Energy Conferences 26
- Contributions to Environmental Characterization and Monitoring Methods 27
- Recommendations for NNMREC Monitoring Plan 27

LITERATURE CITED 28

BACKGROUND

Through the United States Department of Energy (USDOE)-funded Northwest National Marine Renewable Energy Center (NNMREC), Oregon State University (OSU) is designing an Ocean Test Facility to serve as the nation's first integrated marine energy testing facility. Although NNMREC has funding to design and build the first test platform, conduct associated engineering research, and monitor for potential environmental effects post-installation, funding had not been obtained for the field observations and analyses necessary for baseline environmental characterization at the site. Chapter 5 of the Oregon Territorial Sea Plan (TSP) requires offshore energy facility applicants to provide a resource inventory and effects evaluation regarding possible impacts on marine resources, use of the territorial sea, and coastal communities. Baseline 'before installation' sampling to the Ocean Test Facility site to characterize the habitat and biological resources in the area may facilitate and expedite industry use of the testing facility and provide a potential model for site characterization and monitoring to be used by industry partners. An important OSU contribution to the advancement of wave energy in Oregon is to inform the development of industry-wide standard environmental characterization and monitoring protocols. This project leverages previous baseline studies conducted by OWET (Ortega-Ortiz and Mate 2008; Özkan-Haller et al. 2009; Terrill et al. 2010) and ongoing work that NNMREC is conducting with other federal agencies. Knowledge gained about ocean conditions, biological species assemblages, and bird, whale, and crab migration patterns along the Oregon coast based on this Ocean Test Facility site characterization, other projects funded by OWET, industry (e.g. those for the OPT Settlement Agreement), and other studies conducted by OSU in conjunction with state and federal agencies will lead to a more comprehensive understanding of key features of the Oregon territorial sea. Information leaned from this project can be used to inform the permitting process for offshore renewable energy by providing baseline information on the dynamics of Oregon living marine resources, allowing potential developers to focus on site-specific evaluation needs.

INTRODUCTION

The Ocean Test Facility Site

The Ocean Test Facility will be located to the northwest of Yaquina Head off Newport, Oregon, in approximately 50 m water. The footprint of the testing area will be no more than 1 square mile. At the time of the proposal for this project, the exact deployment location was not yet known. However, a general area for evaluation had been determined in consultation with local fishermen. This evaluation area was 2 miles wide by 3 miles long, spanned Yaquina Head, and encompassed depths of 30 to 50 meters. The bottom type is unconsolidated sediment, which is preferred for installation of anchors for the testing platform and commercial buoys under test.

Sedimentary (soft bottom) habitat is the predominant habitat on the continental shelf and slope throughout the Pacific Northwest. Although these sandy or muddy

habitats are sometimes considered an ocean 'desert', they are dynamic and full of life. Organisms living in and on the sediment have to contend with significant changes to their habitat as a result of wave action and ocean currents, making them generally resilient to disturbance. This habitat encompasses two main community types: infaunal (living in the sediment) and epifaunal (living on top of the sediment). Infaunal invertebrates modify the sediment and structure the habitat, making them key species despite their individual small sizes. Since sediment grain size often determines which animals can live in the sediment, changes to sediment movement due to ocean energy extraction or alterations of flow and sediment scour around large device arrays and associated anchors may affect the distribution of infaunal soft-bottom organisms.

Typically waves have strong influences on bottom currents at depths of 50 m and less (Largier et al. 2008); thus, the reduction of wave energy inshore of the installation could affect bottom currents and sediment distribution. Furthermore, the effects of the reduction in wave energy or scour around anchors may go beyond the spatial extent of an installation. Sand adjacent to an artificial reef installed in La Jolla, California, at 13 m water depth was scoured to a depth of 20 to 40 cm as far as 15 m from the reef (Davis et al. 1982). Grain size analysis of sediment collected along a transect from Oil Platform "Eva" off Huntington Beach, California, in 18 m water depth indicated coarse sand to 20 m from the platform with very fine sand beyond (Wolfson et al. 1979). Studies of offshore platforms in the Mediterranean indicated that benthic infaunal assemblages varied with distance from the platform, but the spatial extents of these differences varied with depth of the platform (90 m versus 30 m; Terlizzi et al. 2008) and over time (Manoukian 2010). In some cases, the project footprint surrounded by a buffer of 3 km may be considered the "impact area" (Vanerman and Stienen 2009).

While sedimentary habitats from the territorial sea to the edges of offshore rocky banks in the Pacific Northwest are most likely to be developed for offshore renewable energy, this portion of the seafloor is the least characterized. Many studies have been conducted in southern California (Fauchald and Jones 1977, 1979, SAIC 1986, Hyland et al. 1991, Allen et al. 2007), but studies from well-characterized southern California sites are not necessarily transferrable to this region.

Sampling Sedimentary Habitat and Species

In order to collect baseline information about sediment dynamics that may occur in the vicinity of wave energy capture installation, seasonal and inter-annual dynamics in the composition and distribution of the local sediment should be determined so that potential effects can be evaluated in the context of natural variability. Techniques that traditionally have been used to study and classify the benthic environment include sediment-profile cameras, side-scan sonar, sediment grabs and cores, acoustic sub-bottom profiling, and acoustic backscatter (Rhoads, Muromoto, and Ward 1994). Side-scan sonar, sub-bottom profiling, and acoustic back-scatter provide continuous broad areal maps of the bottom sediment types while sediment-

profile cameras and sediment sampling devices provide descriptions of the benthic environment and sediment characteristics at points on the seafloor. Grabs and cores collect sediment that can be used for a variety of tests to determine sediment characteristics including grain size, density, porosity, redox, and total organic carbon. Effects monitoring methods would be similar baseline sampling protocols. However, broad areal surveys of the actual project area likely will not be possible post-installation due to the presence of the devices. Sediment collection and grain size analysis varying distances and directions from the project location will indicate whether the project has had an effect on sediment dynamics.

To evaluate potential effects on benthic invertebrates and fishes in the project area, information about their distribution, habitat associations, and food habits should be collected, and the degree of temporal and spatial variability in species or assemblages of interest needs to be characterized before project-related changes can be evaluated. Fishes and invertebrates may be observed using different visual survey methods or collected using trawls or grabs. These three methods are briefly reviewed below:

Visual Surveys: Epibenthic fish and invertebrate presence, density, size, and temporal distribution can be ascertained using visual survey methods (Somerton & Glendhill 2005). Specific methods include SCUBA or diver-operated video transects (Martin and Lowe 2010), towed video transects using sled-mounted cameras (Sheenan et al. 2010), manned-submersibles (Yoklavich & O'Connell 2008) and ROV transects (Pacunski et al. 2008).

Bottom Trawls: Bottom trawling using beam trawls or otter/shrimp trawls can be effective to inventory epibenthic fish and invertebrates. The 2 m beam trawl is routinely employed for the collection of epifaunal samples from a variety of sediment types and is designed to sample at and just above the surface of the seabed. It performs reliably on soft and coarse sediment; although whether or not quantities of individuals are sampled reliably with this equipment is still under debate (Callaway et al. 2003). Its small size makes it easy to deploy and usually results in the collection of a manageable sample size (Ware & Kenny 2011). For each tow, an average towing speed of 1.5 knots should be maintained for 5 to 10 minutes, usually depending on the density of organisms.

Grabs: Box corers, van Veen, Ponar, and other types of grabs can be used for sampling infaunal organisms. The U.S. Environmental Protection Agency (EPA) initiated the Environmental Monitoring and Assessment Program (EMAP) in 1990 to develop, test, and validate environmental monitoring methods for sampling benthic macrofaunal invertebrates (U.S. EPA 1990). Originally the EMAP protocol required 3 to 5 replicate samples per station (a number commonly seen in the literature). However, studies have shown that a single sample per station is sufficient (Summers et al. 1992; Macauley et al. 1993); thus the EMAP protocol has been modified and now replicates are optional (U.S. EPA 2001). Analysis of the cost-effectiveness of benthic sampling conducted through

the EMAP program found that using a smaller sampler (0.01 m^2 versus 0.1 m^2) and a larger mesh size (1.0 mm versus 0.5 mm) is the least costly and was effective at describing taxonomic composition and abundance. To maximize cost efficiency and minimize small scale end point variability in future comparative studies, they recommend taking one 0.1 m^2 benthic macrofaunal sample at each station (which may be subsampled if desired) and sieving through 1 mm mesh (Ferraro et al. 2006). Box corers and van Veen grabs are two commonly used 0.1m^2 collection devices. Beukema (1974) tested the efficiency in sampling macrofaunal benthos of the 0.2 m^2 van Veen grab compared with a Reineck 0.06 m^2 box sampler. Densities obtained from the grabs equaled those from the box corer only in the species living exclusively in the top 5 cm of the sediment; thus the box corer was more effective at sampling deeper dwelling organisms.

The broadest spatial study of benthic infaunal communities on the US west coast was conduced by the Environmental Protection Agency (EPA). The EPA National Coastal Assessment (NCA; the coastal component of the nationwide Environmental Monitoring and Assessment Program – EMAP) has traditionally assessed embayments and estuaries; however, one west-coast shelf assessment was conducted in 2003. Sampling for the west-coast shelf assessment was conducted in 20 to 126 m water depth using a 0.1 m^2 van Veen grab, and organisms were sieved through 1 mm mesh. (Nelson et al. 2008). However, few samples (7 of 50) were actually taken in the Oregon Territorial Sea and analysis of distinct biological communities within regions and the habitat features driving differences were not pursued. Similarly, the National Marine Fisheries Service routinely samples the groundfish community via fisheries independent trawl surveys conducted by the Fishery Resource Analysis and Monitoring Division. However, depth strata are shallow (55-182 m), middle (183-549 m), and deep (550-1,280 m), so they also are not sampling in the depth ranges where the Ocean Test Facility will be installed (30 – 50 m). Thus, these surveys could not serve as adequate baseline for characterizing the habitat and organisms found at the test berth site. The US Army Corps of Engineers has sampled the Yaquina Bay dredge disposal sites periodically from 1986 to 2000 using a box corer and again in 2008 using a 0.1 m^2 Young modified Van Veen grab sampler and Otter trawl. Future work will including comparing our results to the findings of these surveys. However, the dredge stations have inadequate temporal replication for the questions addressed by our project.

METHODS

Site selection

Because the location of the future test site was not known prior to the start of sampling, sample stations were established on a regular grid. This was done to ensure that, post-installation, there would be sampling stations at regular, increasing distances away from the installation site. In May 2010, preliminary visual surveys of the bottom type were made using a 'flying camera sled'. These surveys confirmed the presence of a small reef directly off Yaquina Head in 40 m water. The

surveys also confirmed the absence of hard bottom to the NW of Yaquina Head in 50-60 m water. Thus to evenly distribute the sampling and avoid hard bottom areas, twelve stations were established with two transects north of Yaquina Head, two transects south of the head, and stations at approximately 30, 40, and 50 m on each of the four transects: a-e (Figure 1).

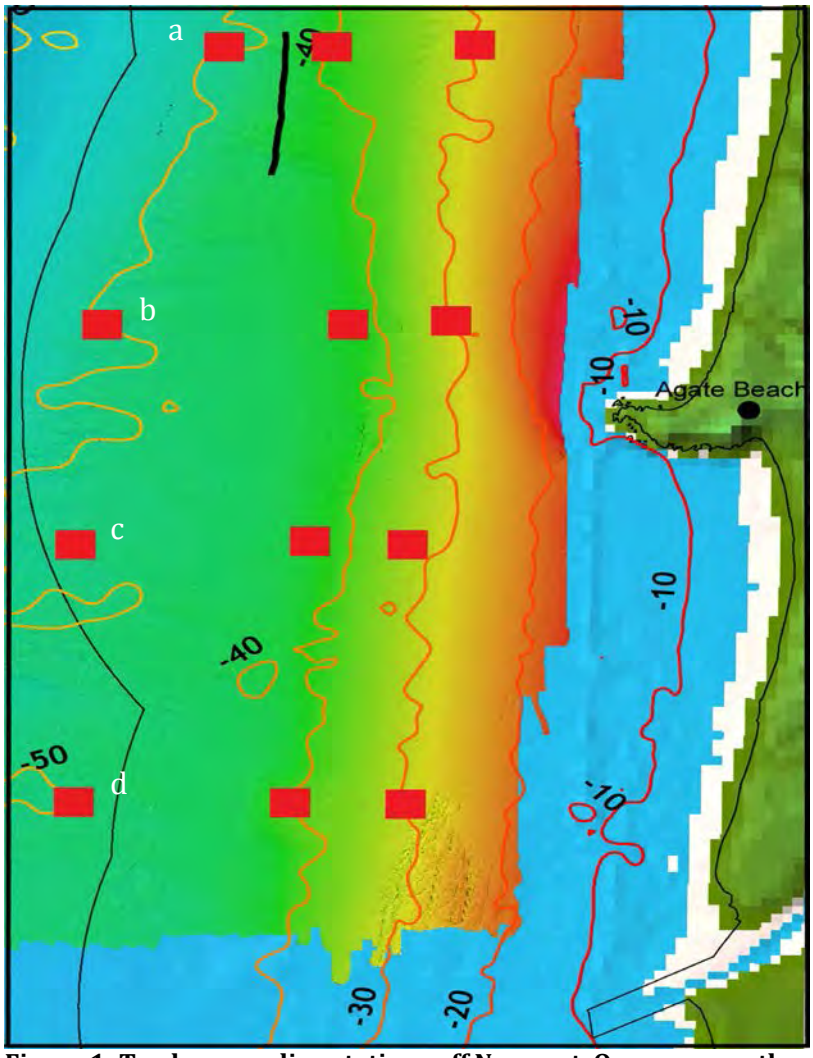

Figure 1: Twelve sampling stations off Newport, Oregon, near the future OSU Ocean Test facility. Transects are labeled a – d, north to south.

Box Coring

Infaunal invertebrates and sediment for grain size and total organic carbon samples were collected using a modified Gray-O'Hare 0.1 m^2 box core (Figure 2). Two grabs were taken at each of the 12 stations. These two grabs were not used as replicates for each station but rather were used to investigate fine scale spatial variability in the samples. Upon landing the box corer on the boat, a sub-sample of sediment was taken from the undisturbed top layer of the collected sample. The contents of the

core were emptied from the corer, and second sub-sample of sediment was taken from the middle of the sample. The remaining sediment was sieved onboard through a 1.0 mm screen in order to collect all organisms greater than 1 mm. Collected organisms were preserved in 5 % buffered formalin. A total of seven box core sampling trips were made from June 2010 to October 2011 (Table 1).

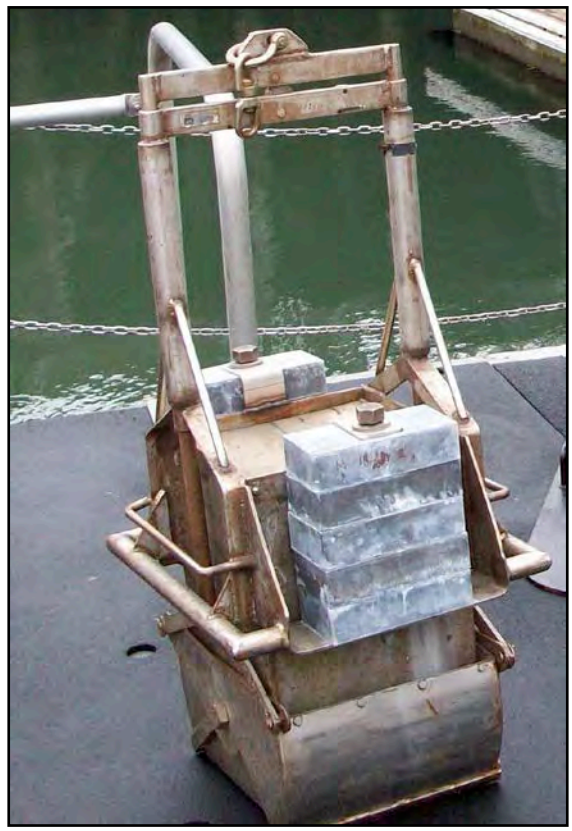

Figure 2: Modified Gray O'Hare box corer used for sampling infaunal invertebrates.

Upon return to the laboratory, rose Bengal was added to the samples in buffered formalin to stain the organisms. After 48 h samples were transferred to 70 % ethanol. Benthic infauna were sorted into major taxonomic groups laboratory staff. All groups except crustaceans and polychaetes were identified by laboratory staff using a stereomicroscope and, when necessary, a compound scope. Contracted 'taxonomic experts' identified crustaceans and polychaetes. We used the same individuals contracted for 2003 EPA National Coastal Assessment project to ensure consistency in identification and to facilitate comparison with those surveys.

Grain sizes of the sediment were analyzed for samples from all visits using a Beckman Coulter Laser Diffraction Particle Size Analyzer (LD-PSA) to determine percent sand and percent silt/clay. After determining there was no significant difference in the grain size of the surface versus mid-core samples, only the surface samples were analyzed using the LD-PSA. Samples from the first year (June 2010 to April 2011) were analyzed for percent total organic carbon. Due to the low values for TOC and lack of temporal variability, we did not continue these measurements for the second summer/fall sampling in 2011.

Trawling

For collection of epifaunal invertebrates and fishes, a beam trawl was used. The beam trawl is 2 meters wide by 70 centimeters high with a 3-millimeter (mm) mesh liner the entire length of the net and a tickler chain (Figure 3). Tows were conducted for 10 minutes (except in summer 2011 when large numbers of ctenophores forced us to reduce the tow time to 5 minutes), and a constant speed of ~1.5 knots was attempted. A meter wheel on the sled of the trawl provided actual measures of the distance the trawl was on the bottom. For the trawl surveys, only 9 stations were sampled on each visit. Those stations along the southern-most transect lie at the

edge of a reef. It was deemed too risky for the net and the reef organisms to sample those stations. A total of eight beam trawl sampling trips were made from June 2010 to October 2011 (Table 1). Upon bringing the collection on board, fish and small epifaunal invertebrates were sorted into major groups and promptly euthanized and frozen. Larger invertebrates such as crabs and sea stars as well as elasmobranchs such as skates were identified, sexed if appropriate, measured, and released. Upon return to the laboratory, fish and collected invertebrates were sorted by species and counted. All fish lengths and weights were measured.

Figure 3: Beam trawl used for capturing juvenile groundfish and epibenthic invertebrates.

Videography

In May 2010, preliminary videographic surveys were made using a 'flying' camera sled. This device had no mechanism to keep it a standard distance above the bottom, so frequently the sled hit the bottom (stirring up sediment and making the images unusable) or it was flying too high to be able to see the bottom. This was determined to be suitable for habitat classification but not organism identification. Thus, it was helpful in choosing permanent station locations that were not on rocky substrate but it was not used for subsequent organism analysis.

In August 2010, and February, May, June, and October of 2011 *in situ* videographic surveys using a DCV video camera were conducted in conjunction with normal trawling activity. The camera was mounted in the center of the trawl's cross beam (Figure 3) such that all organisms stirred up by tickler chain, or encountered in the tow path were be seen before entering the net. The trawl was also equipped with lights and a pair of lasers mounted 10 cm apart, positioned at the center of the camera's view, for use as a scaler. Due to the mobility and structure of some benthic organisms, it is believed that not all individuals encountered during a tow were captured; therefore, videos were analyzed to determine the percentage of encountered individuals captured by the trawl. Benthic macroinvertebrates, including crab (>3 cm carapace width), sea pens, and sea stars, have been analyzed.

In situ video footage was converted from DCV to digital, inspected and edited. Upon inspection, if a video was found to have a high degree of sediment re-suspension that obscured the bottom habitat, or if particles affixed to the camera lens caused the video to blur, the video was not analyzed. In total, 39 individual tow videos were collected, of which 22 were analyzed. Start time, end time, and total bottom time were noted, with start time classified as the point at which the beam trawl made and kept consistent bottom contact and stop time the point at which the trawl left the bottom for the final time. Intervals where the beam trawl was not in contact with the bottom were noted and subtracted from the total bottom time. The total number of crab, sea pens, and sea stars encountered during the tow were noted.

In October 2011 we evaluated a third type of videography system. We used a drop camera designed by the Oregon Department of Fish and Wildlife. This camera is designed to be dropped to the bottom and left for a period of time to observe fish in the vicinity. This has been used very effectively on rocky reefs; however, the amount of sediment disturbance caused by the 'drop' resulted in unfavorable videography conditions. Thus it was determined that this was not an effective survey device for the sedimentary habitat.

Water column sampling

At each station-visit vertical water-column profiles of conductivity (proxy for salinity), temperature, dissolved oxygen, and depth were obtained with a Sea-Bird Electronics unit.

Table 1: Sampling visits and gear types.

	Box Core	Trawl	Video
Mav 2010			✔
June 2010	✔	✔	
August 2010	✔	✔	✔
October 2010	✔	✔	
February 2011		✔	✔
April/May 2011	✔	✔	✔
June 2011	✔	✔	✔
August 2011	✔	✔	
October 2011	✔	✔	✔

Flatfish Body and Feeding Condition

English sole, Butter sole, Pacific sanddab, and Speckled sanddab ≥ 90 millimeters were used for feeding analysis. Body condition (which indicates overall growth and relatively long-term feeding history) of the selected flatfish was determined using

two methods: Fulton's K-value [$K = 100 (W/L^3)$ where W is the body mass and L is the total length] and residuals. Fulton's K-value is a morphometric index using weight and length of a fish, assuming heavier fish for a given length are healthier fish, as an indication for its condition. Residual analysis provides a comparison of each individual fish to the species data, revealing the variation of condition within each species (Ogle n.d.). After weighing and measuring the fish, their guts were removed and the contents weighed for stomach fullness. Stomach fullness (%Fullness = Ws/Wt*100, where Ws is the weight of stomach contents and Wt is the weight of the fish) indicates the recent feeding success of a fish. Guts in this study were defined as the stomach and the intestine.

Data Analysis

Environmental Variability: To investigate the physical variability among sampling stations, principal components analysis (PCA) was conducted on the 'environmental' variables associated with each station: water depth, temperature, dissolved oxygen, salinity, and % silt/clay. PCA is one of the most commonly used multivariate statistical techniques used to reveal patterns in data, especially among objects (e.g. stations) that cannot be found by analyzing each variable separately (Quinn & Keough 2002). Biplots were generated with axes representing the dominant principal components (reduced variables), points representing the stations, and vectors, representing the physical variables, drawn from the origin. The direction of the vector indicates that the value of the variable increases in that direction and the length of the vector indicates the rate of increase – long vectors are more gradual increases, short vectors are faster increases (Quinn & Keough 2002). Two-way ANOVAs also were used to investigate differences in individual physical characteristics across the site and over time.

Flatfish Condition: After using Fulton's K-value to measure condition of fishes, residuals to measure variation in fishes' condition, and percent fullness to indicate feeding success, two-way ANOVAs were used for balanced data sets. Those data sets that were not balanced were analyzed using General Linear Model analyses. A one-way ANOVA was used for Pacific sanddab data at the 50 m depth across the seasons because it had so little data coverage over 30 and 40 m depths.

Box Core and Trawl Assemblages: For species assemblage analyses (conducted separately for box core invertebrates, trawl invertebrates, and trawl fishes), taxa for which there was just one individual collected for the entire dataset were removed so as not to skew the data based on rare species. Shannon–Weaver diversity (H) and Pielou's evenness (J) were calculated for each sample. Indices were compared using two-way ANOVAs with the factors depth and month. Data were then square root transformed for subsequent multivariate analyses.

Cluster analysis was conducted on the transformed density datasets for each 'assemblage' (infaunal invertebrates from box cores, epifaunal invertebrates from trawls, and fish from trawls) in order to produce groups of similar stations based on the species abundances. The SIMPROF routine was run in Primer 6 (Clarke 1993).

This routine conducts a series of permutation tests to determine if clusters in the dendrogram have statistically significant structure. Samples within a cluster that could not be significantly differentiated are considered to be a genuine group. The SIMPER procedure in Primer was then used to identify the species contributing most to similarities within clusters and differences between clusters.

Multidimensional Scaling (MDS) was used to analyze the transformed density data to examine species composition and proportions across stations. MDS is an ordination technique where a small number of axes are selected prior to analysis and data are fitted to those dimensions, but no axes are hidden from variation (Holland 2008). Data were analyzed using the MDS function in Primer 6 (Clarke 1993). Data are displayed in MDS plots such that samples that form a genuine cluster, as determined using the SIMPROF routine, have the same symbol on the plot. Following MDS analysis of the organism data, the BEST function in Primer was used. The BEST function is based on the BIO-ENV procedure, which uses all the available environmental variables to find the combination that corresponds best to the patterns in the biological data. In order to fully investigate the relationship among all physical variables and species distributions, for analysis of the trawl catches, sediment data from box core grabs from corresponding months were used.

Video Analysis: Comparisons of video and catch data were made using encounter/capture rates and estimates of percent captured. Encounter/capture rates were calculated for each tow by dividing the total number of individuals for each species by the total bottom time rounded to the nearest minute. For videos, this metric provides a measure of how often a species was encountered by the trawl; while for the catch data, it is an estimate of how often a species is captured by the net. Mean encounter/capture rates were also calculated for each species and compared using one-tailed t-tests. Estimates of percent captured for both individual tows and species were made by dividing the number of individuals caught by the number encountered in the video.

RESULTS

Box Coring

Physical Characteristics

The median grain size of the sampling stations over the course of the study ranged from 188 µm to 462 µm. Smaller median grain sizes were found at the 30 m stations while larger grain sizes were found at the 40 and 50 m stations (Figure 4). Specifically, all the grabs from the 30 m stations contained at least 0.83 % silt/clay (defined as grains 62.5 µm or smaller). Most (77 %) of the grabs from the 40 and 50 m stations were 0 % silt/clay. Two-way ANOVA of median grain size with the factors depth and month indicated that while depth was highly significant ($p < 0.001$), month was not ($p = 0.975$). Percent total organic carbon (TOC) in the collected sediment ranged from 0.018 % to 0.087 % and was inversely related to grain size. The best fit between the variables was an exponential relationship with an R^2 value

of 0.49. TOC also varied significantly by depth ($p < 0.001$) but not by month ($p = 0.813$).

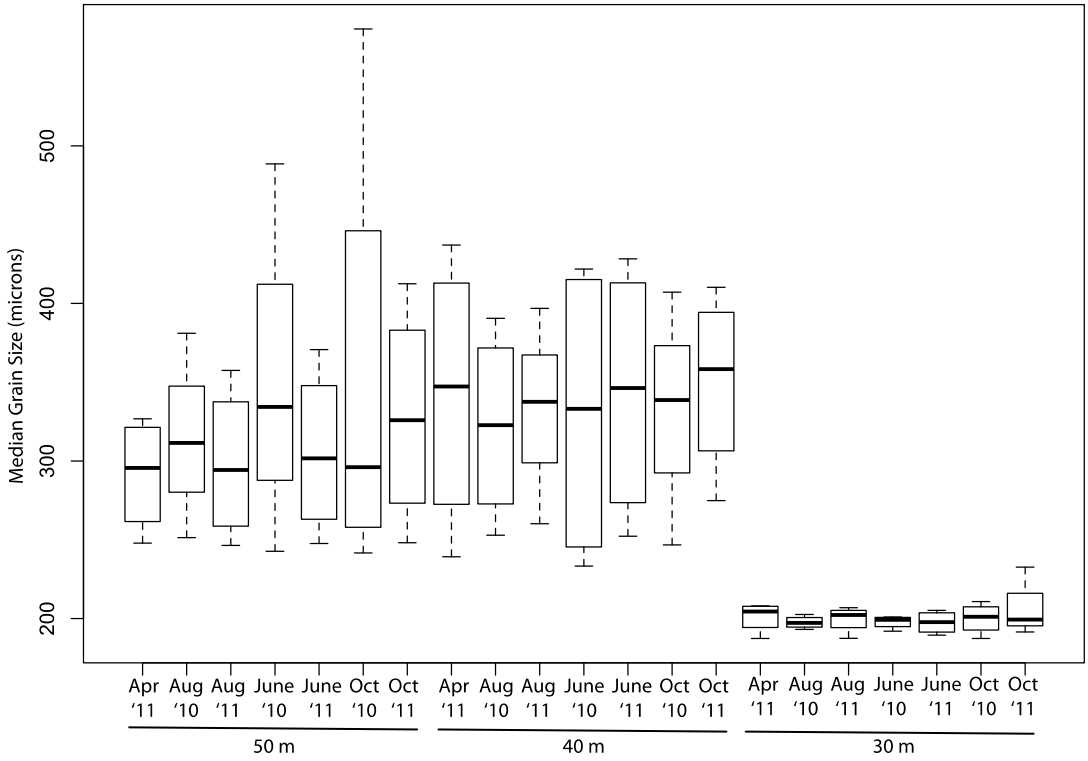

Figure 4: Median Grain Size of sediment samples collected from all box cores, grouped by station depth and month of collection.

Bottom water property values at the site all varied significantly with station depth, month, and the interaction of depth and month. However, these water property values did not all vary in the same way. Temperatures ranged from 7.08 °C in August 2010 to 14.73 °C in October 2011. The August 2011 water temperatures were not significantly different than those measured in June 2011 and August 2010 while all other sampling events had significantly different water temperatures. Dissolved oxygen values ranged from a low of 1.14 ml/L in August 2011 to a high of 6.38 ml/L in April 2011. June 2011 DO values were not significantly different than June 2010 and August 2011. October 2011 and April 2011 were statistically indistinguishable while all other sampling events had significantly different DO levels.

Analysis of the variation in physical attributes of the box core stations using Principle Components indicated that the first axis accounted for 99.3% of the variation. Component 1 aligned with the Median Grain Size vector, plotted as a long vector, indicating this variable changed gradually (Figure 5). The Depth vector integrated Components 1 and 2 and was short, indicating this value changed rapidly. Together Components 1 & 2 explained 99.8% of the variance in physical characteristics of the samples.

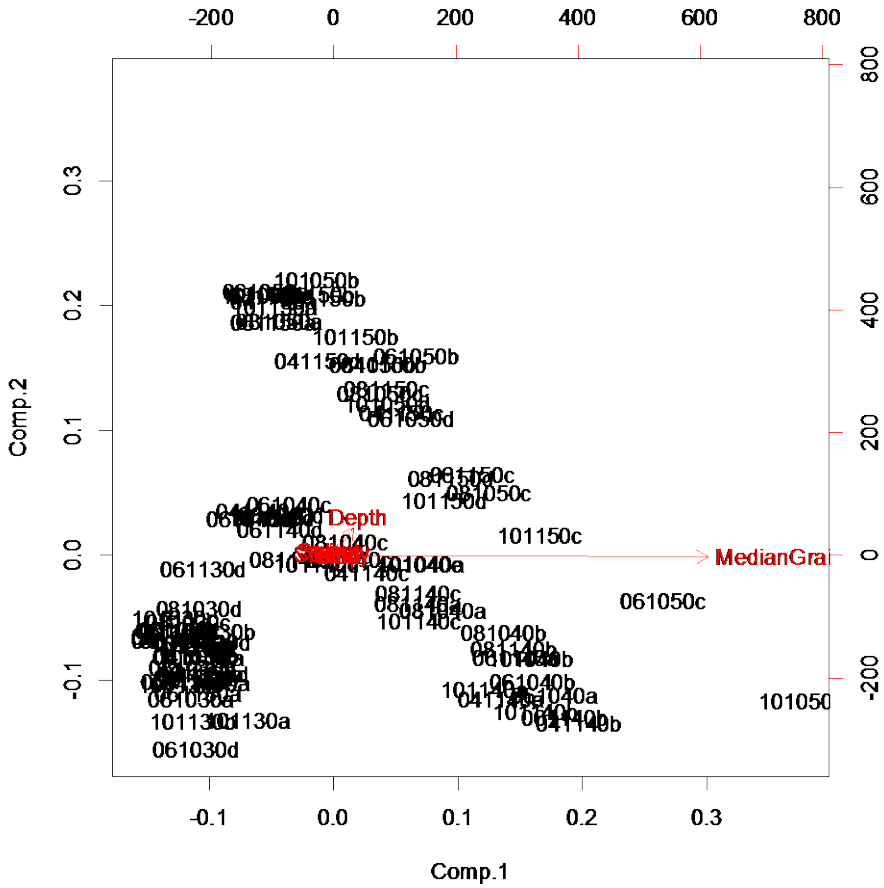

Figure 5: Principle Components Analysis of physical attributes of box core samples.

Infaunal Invertebrates

The diversity of infaunal invertebrates at the sampled stations varied significantly with station depth ($p = 0.001$) but not with month ($p = 0.443$). The 30 m stations had significantly higher diversity than 40 and 50 m, but 40 and 50 m stations were not different from one another. The same patterns held true for significant differences in evenness by depth ($p < 0.001$) but not month ($p = 0.887$).

Analysis of infaunal invertebrates based on the density of collected species indicated that similar communities formed primarily based on station depth (Figure 6). All the 30 m stations and occasionally the southern-most 40 m stations clustered together

and could not be significantly differentiated at the 5% level (Group f). The remaining southern 40 m stations were indistinguishable (Group g), and clustered with the 30 m group with 42.4 % similarity. The northern 40 m stations clustered with the southern 50 m stations (Group a). The two northern-most 50 m stations clustered significantly and exclusively with themselves (Groups b and c). One singleton (Group e, station 30d from October 2011) demonstrates how the assemblage varied when the box corer landed adjacent to the reef rather than at the intended sampling location. The BEST function indicated that the highest resemblance between the ordination of the stations based on the biological variables and the ordination of the stations based on the environmental variables was achieved when just two of the environmental variables were used: depth and median grain size. This resulted in a correlation of 0.697. This procedure was bootstrapped 499 times with a resultant significance level of 0.02.

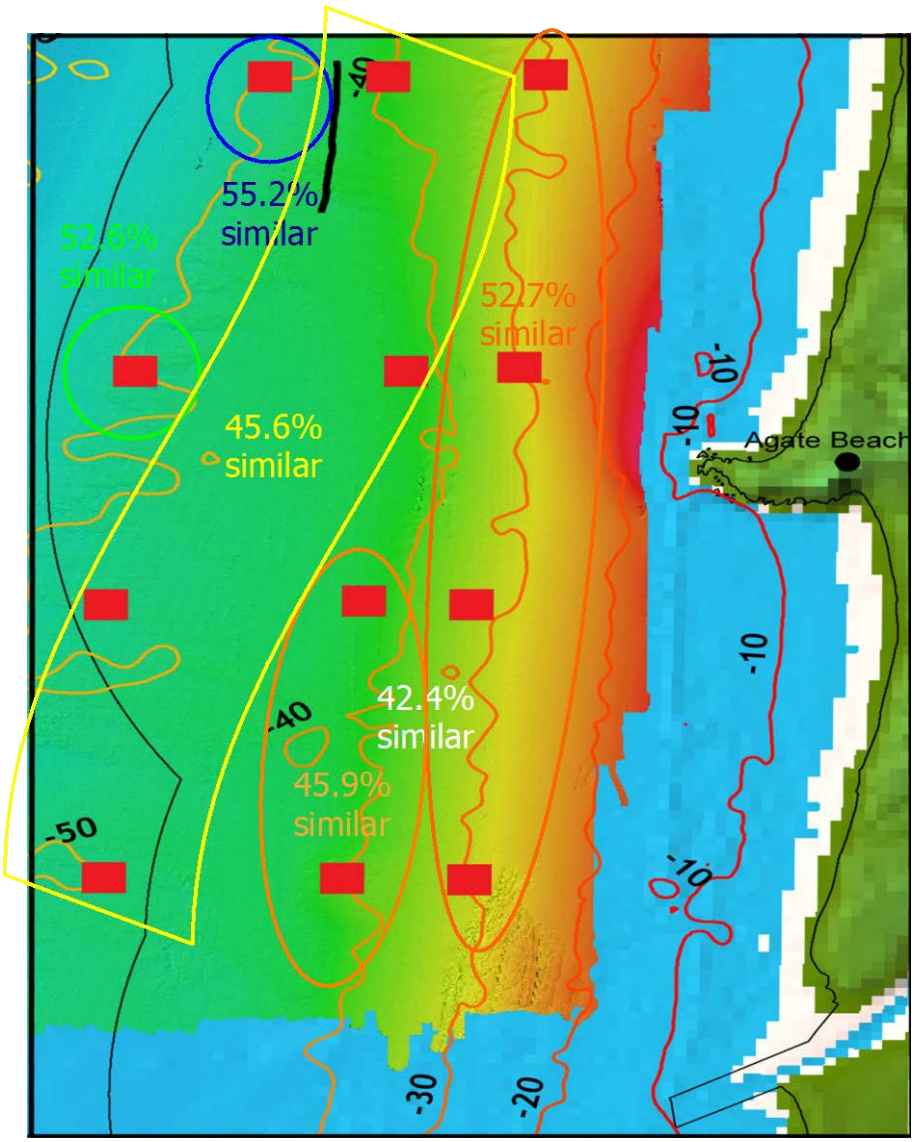

Figure 6: Similarity among box core stations based on infaunal invertebrate assemblages.

Trawling

Physical characteristics

As with the box core sampling trips, bottom water property values at the site all varied significantly with station depth and month as well as the interaction of depth and month. However, because the trawl trips were taken at different times during the month than the box core trips, the similarities and differences among months did not hold the same patterns. For the water temperature, only February and October 2011 were indistinguishable; all other sampling visits had different average water temperatures. Temperatures ranged from a low of 7.21 °C in August 2010 to a high of 11.88 °C in October 2010. Dissolved oxygen values ranged from a low of 1.08 ml/L in August 2010 to a high of 5.43 ml/L in February 2011. October 2010, February 2011, and October 2011 all had statistically indistinguishable dissolved oxygen values. May and June 2011 were similar as were June 2010 and August 2011.

Analysis of the variation in the water quality attributes (no sediment samples were taken on the trawl trips) of the trawl sampling visits using Principle Components indicated that the first axis accounted for 95.7 % of the variation. Component 1 aligned with the Depth vector, plotted as a long vector, indicating this variable changed gradually (Figure 7). The Temperature and Dissolved Oxygen vectors nearly aligned with Component 2 (which accounted for 4.0 % of the variation) and were short, indicating these values changed rapidly. Together Components 1 & 2 explained 99.8% of the variance in the samples.

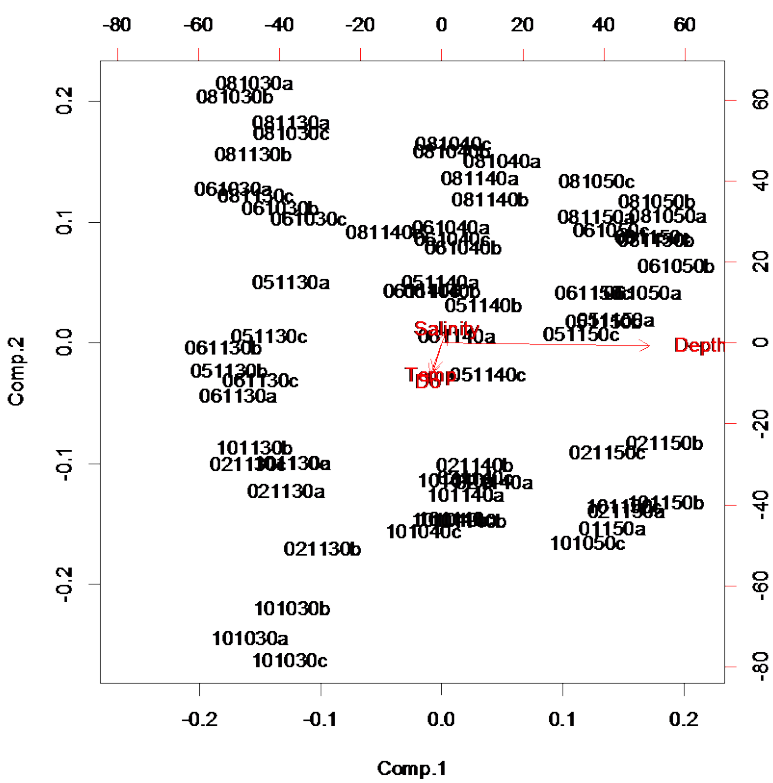

Figure 7: Principle Components analysis of water properties of tow stations

Collected fish

Speckled sanddab (*Citharichthys stigmaeus*), butter sole (*Isopsetta isolepis*), English sole (*Parophrys vetulus*), Pacific sanddab (*Citharichthys sordidus*), and juvenile smelt were the 5 most abundant species (in order) captured during trawling efforts (Table 2). These 5 species represented 86% of the total catch by number. The diversity of fish (calculated using the Shannon-Wiener index) collected via beam trawl at the sampled stations varied significantly with the month of collection ($p < 0.001$) but not with station depth ($p = 0.225$). Generally, there were no significant differences in fish diversity observed among the summer months, but October 2010 and October 2011 were significantly different from June 2010, June 2011, and August 2010. The February 2011 collections did not have different diversity values than either the October collections or the summer collections. Similar patterns held true for significant differences in evenness by month ($p = 0.007$) but not depth ($p = 0.929$); however in evenness October was different only from June.

Similar groups of fish were found in similar seasons (Figure 8). Summer collections formed tight clusters with most June 2011 samples in Group b (high densities of flatfish dominated by butter sole) and most other summer samples in Group c (high densities of flatfish dominated by specked sanddab). These two summer groups were 43.88 % similar to each other. Fall (Group a) and fall and winter (Group d) collections were different from summer and less similar within groups as well. In October, we collected the highest abundance of poachers, and in February we collected most of the juvenile smelt. The greatest resemblance between the ordination of the stations based on the biological variables and the ordination based on the environmental variables (sediment and water characteristics as well as 'month') was achieved when month, temperature, and salinity were used in the analysis. This resulted in a rho value (correlation) of 0.430. This procedure was bootstrapped 499 times with a resultant significance level of 0.02.

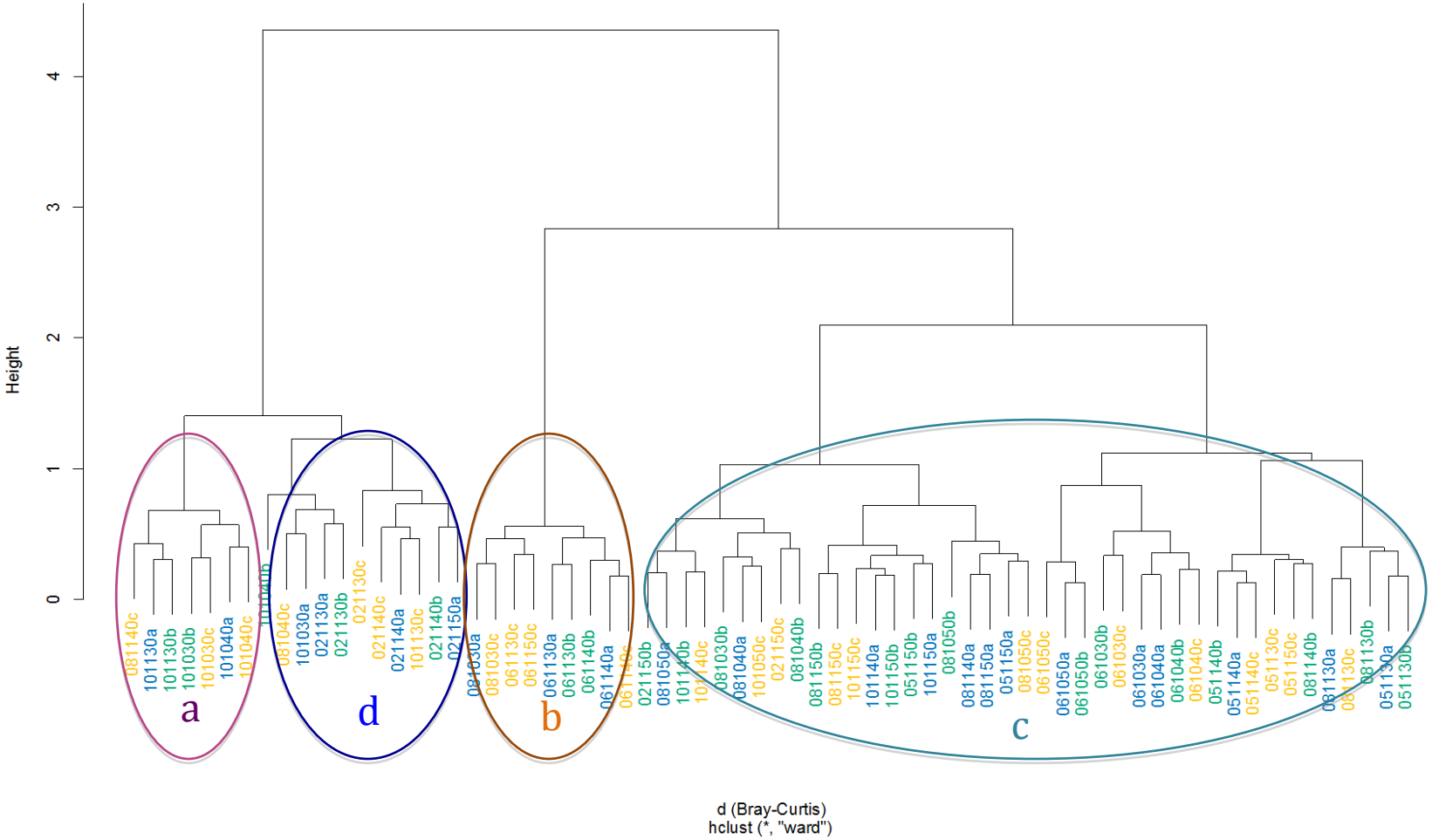

Figure 8: Cluster dendrogram of similarity in fish assemblages among trawls. Significant clusters (circled) were determined using Bray Curtis similarity. Colors represent transect lines north (blue) to south (gold).

Table 2: The number of individuals per species and percent of total captured via trawl during all visits to all stations for fish (68 tows) and year 1 for invertebrates (42 tows). The most abundant groups of invertebrates collected in the trawl, mysid shrimp, *Crangon* shrimp, and olive snails, are bolded.

Fish Species	Total #	% of Total
speckled sanddab	1555	35.8
butter sole	803	18.5
English sole	539	12.4
sanddab sp.	379	8.7
Pacific sanddab	239	5.5
juvenile smelt	238	5.3
sand sole	135	3.0
warty poacher	104	2.3
Pacific staghorn	61	1.4
pricklebreast poacher	56	1.3
unknown fish	32	0.7
Pacific sandlance	29	0.7
black rockfish	29	0.7
Pacific tomcod	26	0.6
rex sole	23	0.5
snailfish sp.	23	0.5
rainbow smelt	20	0.5
ribbon snailfish	13	0.3
roughback sculpin	12	0.3
big skate	10	0.2
showy snailfish	9	0.2
tubenose poacher	9	0.2
sole sp.	7	0.2
bay pipefish	6	0.1
canary rockfish	4	0.1
alligator poacher	3	0.1
petrale sole	3	0.1
pygmy poacher	3	0.1
northern anchovy	2	<0.1
rockfish sp.	2	<0.1
blackfin poacher	1	<0.1
buffalo scuplin	1	<0.1
red Irish lord	1	<0.1
spotted ratfish	1	<0.1
Icelinus sp.	1	<0.1
lemon sole	1	<0.1
white surfperch	1	<0.1
spiny dogfish	1	<0.1
unknown poacher	1	<0.1

Invertebrate Species	Total #	% of Total
Neomysis kadiakensis	51810	35.5
Callianax pycna	25610	17.5
Crangon stylirostris	23849	16.3
Neomysis rayii	21584	14.8
Crangon alaskensis	10182	7.0
Callianax biplicata	4108	2.8
Pagurus sp.	2697	1.8
Cumacea sp.	2143	1.5
Amphipoda sp.	701	0.5
Crangon franciscorum	622	0.4
P. nephrophthalma	357	0.2
Astyris aurantiaca	329	0.2
Tellina nuculoides	281	0.2
Archaeomysis grebnitzkii	234	0.2
Isopoda sp.	200	0.1
Crab megalopae	164	0.1
Dendraster excentricus	155	0.1
Armina californica	139	0.1
M. magister adult & juvenile	112	0.1
"Other" Shrimp	112	0.1
Crangon holmsei	110	0.1
Caesia fossata	107	0.1
Gemma gemma	101	0.1
Polychaete worms	90	0.1
Non-polychaete worms	78	0.1
Pisaster brevispinus	26	<0.1
Paracaudina chilensis	16	<0.1
Alienacanthomysis macropsis	12	<0.1
Ptilosarcus gurneyi	11	<0.1
Cylichna attonsa	11	<0.1
Cephalopoda sp.	9	<0.1
Luidia foliolata	6	<0.1
Macoma carlottensis	6	<0.1
Axinopsida serricata	4	<0.1
Oenopota fidicula	4	<0.1
Siliqua patula	3	<0.1
Pycnopodia helianthoides	2	<0.1
Amphiodia urtica	2	<0.1
Tellina bodegensis	2	<0.1
Gastropteron pacificum	1	<0.1
Odostomia sp.	1	<0.1
Insecta sp.	1	<0.1

Flatfish condition

Flatfish body condition and feeding condition were analyzed over the first full year of sampling (June 2010 to May 2011; Table 3). Butter sole and speckled sanddab were the only fish abundant enough to run the full two-way ANOVA model to analyze both depth and month as factors. Butter sole generally had larger K-values (were in better condition) during fall and winter months than in summer months. While depth was not found to be a significant factor, it appeared the condition of the fish collected at 30 m was generally higher than those collected from 40 m and 50 m. The variability in condition of fish collected from 40 m and 50 m data was more similar, with lower residual values in the summer months and higher residual values in the winter and fall months. A highly significant relationship was found for Speckled sanddab residuals over season, across depth and the interaction between depth and date. This significance is likely an artifact as the data were heavily influenced by one large (295 mm, 265.94 g) outlier that made up the single specimen for October sampling at 40 m. English sole and Pacific sanddab were found in all months only at 50 m, so the results of one-way ANOVA with the factor month are presented. For English sole Fulton's K condition was significantly different across months with October being different than the August, May and June, but not February. English sole condition as measured using residuals also varied across months with August being significantly different than February, May, and June. Gut fullness did not vary across seasons for English sole. For Pacific sanddab month was a significant factor for Fulton's K condition but not for residuals or gut fullness.

Table 3: Analysis of variation in body and feeding condition of select flatfish species across month (and depth & the interaction of month and depth when available). Bold values indicate significance.

	Fulton's K Condition			Residuals			Gut Fullness		
	Depth	Month	Inter.	Depth	Month	Inter.	Depth	Month	Inter.
Butter Sole	0.151	**0.001**	**0.074**	**< 0.001**	**0.004**	**0.042**	**0.022**	0.234	**0.003**
English Sole	n/a	**0.008**	n/a	n/a	**< 0.001**	n/a	n/a	0.263	n/a
Pacific Sanddab	n/a	**0.004**	n/a	n/a	**0.013**	n/a	n/a	0.864	n/a
Speckled Sanddab	0.304	0.637	0.525	***< 0.001***	***< 0.001***	***< 0.001***	0.705	0.779	0.730

Collected epifaunal invertebrates

Due to the time expense of sorting and identification, only the first year's (June 2010 to May 2011) epifaunal invertebrate collections are reported here. Mysid shrimp, *Crangon* shrimp, and olive snails (*Callianax* sp.) were the most abundant organisms,

together making up 95 % of the invertebrates (by number) collected in the trawl (Table 2). The diversity of collected epifaunal invertebrates (using the Shannon-Wiener index) collected via beam trawl at the sampled stations varied significantly with the month of collection ($p = 0.001$) but not with station depth ($p = 0.227$). Generally, there were no significant differences in epifaunal invertebrate diversity observed among the summer and fall months, but February 2011 was significantly different from June, August, and October 2010. Similar patterns held true for significant differences in evenness by month ($p = 0.001$) but not depth ($p = 0.464$); where again February 2011 was significantly different from June, August, and October 2010.

Neither the cluster nor multidimensional scaling analyses resulted in discernable patterns in species assemblages. Multiple months and depths were found within significantly similar clusters of samples, and the pattern had a stress value of 0.21, which approaches the cut-off value of 0.3, greater than which for species abundance data indicate the configuration is no better than arbitrary (Clarke 1993). While the ordination pattern was weak, the BEST function indicated a correlation of 0.549 between the ordination of the stations based on the biological variables and the ordination of the stations based on the environmental variables was achieved when month and salinity were used in the analysis. This procedure was bootstrapped 499 times with a resultant significance level of 0.02.

Videography

Five macroinvertebrates could be distinguished in the trawl videos: three sea stars (*Pisaster brevispinus*, *Luidia foliolata*, and *Pycnopodia helianthoides*), one sea pen (*Ptilosarcus gurneyi)*, and Dungeness crab (*Metacarcinus magister*). *Ptilosarcus gurneyi* was the most abundant species seen in the videos with a total of 230 individuals, seen mostly at the 50 m stations. *Metacarcinus magister* was the most abundant species caught in the trawls, with a total of 15 individuals in those trawls for which we had usable video. No trend in *M. magister* distribution was evident across depths. One-tailed t-tests showed significant differences ($p < 0.05$; Table 4) in estimates of mean encounter and capture rates for all species except *Pycnopodia helianthoides* (likely due to small sample size). All species were more frequently encountered than captured.

Table 4: Encounter and capture rates for macroinvertebrate species observed via video mounted on the trawl net. Bold p-values indicate significance.

	Video		Trawl		
Species	Mean Encounter Rate (#/min)	SE	Mean Catch Rate (#/min)	SE	T-Test (p)
M. magister	0.12	0.031	0.041	0.014	**0.0046**
P. gurneyi	0.55	0.205	0.020	0.012	**0.0078**
P. brevispinus	0.22	0.052	0.036	0.011	**0.0002**
Luidia foliolata	0.049	0.016	0.013	0.005	**0.0070**
Pycnopodia	0.010	0.006	0.005	0.003	0.1643

Of the species analyzed, *Pycnopodia helianthoides* had the highest overall catch percentage at 50%; however this was based on very few individuals: 4 were observed and 2 were captured in the entire dataset. *Ptilosarcus gurneyi* had the lowest overall capture percentage at 4%. Overall capture rates for *Luidia foliolata* and *M. magister* were moderate, 26 % and 34% respectively.

DISCUSSION

Sediment and Infaunal Invertebrates

Strong patterns in sediment characteristic exist at this site. There is a very distinctive break in median grain size between the 30 m stations and the 40 & 50 m stations due to a larger amount of silt/clay present closer to shore. This pattern is static throughout most of the year; however, since we were not able to sample in winter we cannot confirm that this difference holds up in winter. Furthermore, this pattern is consistent across years as we observed it in 2010 and 2011 and backscatter data taken as part of the Oregon Territorial Sea mapping effort observed the sediment type break in 2009. These differences in median grain size and percent silt/clay with depth correspond to a difference in percent total organic carbon in the sediment as the amount of particle surface area available to adsorb a coating of organic carbon changes with grain size. Anthropogenic contaminants are also capable of elevating levels of TOC, which can pose a risk to benthic organisms. TOC values observed at this site (max. = 0.087 %) all fell far below the lower threshold (< 2 %) for biological significance, adopted from EPA National Coastal Condition Reports (e.g. U.S. EPA 2004). Thus, it does not appear that the benthic conditions at this site off Yaquina Head, Oregon, in depths greater than 30 m, are influenced by anthropogenic organic enrichment.

Differences among infaunal invertebrates assemblages were strongly associated with sediment grain size and depths. All the 30 m stations had a significantly indistinguishable assemblage of organisms, which matched the finding that there was a different sediment type (> 0.75 % silt/clay) in that zone. Thus, if effects of wave energy device installation and operation resulted in changes between a nearly sandy habitat and one with a small percentage of silt/clay, one would expect to observe a related shift in infaunal invertebrate species found in those areas. At the 40 m and 50 m stations, there was greater diversity in infaunal invertebrates assemblages among the depths and north and south of Yaquina Head. Thus, there likely are additional factors affecting the spatial distributions of infaunal invertebrates in sandy substrates at those depths. Future work may explore the ecology of specific species influential in determining distinct assemblages in order to pinpoint factors affecting their spatial distributions.

Because no seasonal differences were observed in either the sediment characteristics or the benthic invertebrates across seasons, site characterization and effects monitoring for these parameters may not have to be done with the sampling frequency used in this project. At a new site, quarterly (rather than bi-monthly)

sampling may be enough to characterize a site. If a lack of seasonal variability is also observed at other locations, effects monitoring temporal intensity may be further reduced.

Fish

The major influence on species and abundances of fish in this habitat was season and the associated changes in the water properties (temperature and salinity) that correspond with different water masses. High densities of flatfish characterized the catch in summer, and speckled sanddab (*Citharichthys stigmaeus*), were usually the dominant species. However, in June 2011, there was a nearly 5-fold increase in the abundance of butter sole (*Isopsetta isolepis*), relative to other summer samples, while the abundance of speckled sanddab stayed the same. There are no physical factors that were abnormal in June 2011 relative to the other sampling periods: June 2011 had the median average temperature and DO and low but not the lowest salinity. Thus, further investigation into the life history strategies and behavior of butter sole will be required to fully understand the dynamics of this species. Although not statistically significant, there were observed differences in some flatfish species densities with depth. English sole and Pacific sanddab were usually absent from shallower stations and in low abundance at the 50 m stations. This suggests we were sampling at the edge of their depth distribution. If these species are of concern, future work should sample deeper to accurately characterize their abundances and distributions. These findings contrast with similar study conducted by Hogue and Carey (1982), where English sole were most abundant, followed by Speckled sanddab, Butter sole, and finally Sand sole; Pacific sanddab was not included in their study. Hogue and Carey sampled in shallower waters, from 9-30 m deep, so their high English sole abundances are surprising in comparison to our low abundances. Differences in relative species abundances could be due to different depth ranges or it could be due to a shift in species abundances over time; we will see, with continued sampling, if this pattern is consistent. In October, flatfish densities were significantly lower and we collected quite a few pricklebreast poachers (*Stellerina xyosterna*). In February rainbow smelt (*Osmerus mordax*) and other juvenile smelt were in high abundances. Because of these strong seasonal (and sometimes interannual) differences in species abundances, initial characterization of a site should be conducted for multiple seasons. Effects monitoring should also be conducted across seasons. Minimally, one should ensure that before and after effects monitoring is done in the same season across years, so that natural seasonal variation does not confound the observations and conclusions.

Patterns of fish condition generally were not associated with gut fullness. There were few significant differences in gut fullness, suggesting the ability to capture prey did not vary across seasons or with depth for most species. Only butter sole had significant differences in gut fullness with depth, and this did not correspond with a significant difference in Fulton's K condition with depth. Alternatively, month was a significant factor for fish condition (measured as both Fulton's K and based on

residuals) for butter sole, English sole, and Pacific sanddab. Thus, the variation in condition must be associated with factors other than recent feeding success.

Epifaunal Invertebrates

Invertebrate assemblages collected via trawl seem to be driven by seasonal factors. While 'month' itself did not contribute significantly to the correlation between physical characteristics and species differences, temperature and salinity, which indicate different water masses, were influential. Part of the reason for a lack of clear patterns in this dataset as a whole may be that the organisms collected were both those that live in the surface layer of the sediment as well as those that live in the water column just above the sediment. Future work should separate these different assemblages and analyze them independently.

Videography

Trawl selectivity is often thought to be determined by the mesh size of the codend, as well as the behavioral response of the target organism (Rotherham et al., 2008; Yanase et al., 2009). However, many of the benthic invertebrates encountered by the beam trawl in this study are slow moving or sessile in nature making substantial avoidance behaviors unlikely. It is also unlikely that the mesh size of the codend played a role in capture as all of the individuals seen on the video measured well over the 3 mm mesh size, which lined the entire net. It is most likely then that the structure of the invertebrates themselves played the greatest role in their avoidance of capture. Sea pens, for example, were the most encountered organisms in the videos yet were the least captured; most likely due to their physical structure. The aboveground polyp of a sea pen is anchored in the sediment by a flexible, burrowing peduncle. When encountered by the trawl, the polyp often can be seen bending completely to the sea floor, allowing the tickler chain and net to pass over without being uprooted. Similar observations have been made with the sea whip, *Halipteris willemoesi*, a species of colonial cnidarian, which also uses a flexible peduncle to anchor to the seafloor (Troffe et al., 2005). The sea stars encountered, while often snagged by the tickler chain and dragged for up to several minutes, were not forced into the water column where they could be overtaken by the trailing net. These species likely escaped capture by passing through the gap between the footrope and the seafloor as has been seen in other studies also investigating the selectivity of beam trawls (Yanase et al. 2009). Of all the species encountered, *M. magister* is the only one capable of a rapid response to stimulus provided by the tickler chain making behavioral response a likely factor in capture. When hit by the tickler chain most of the crab seen attempt to escape by rising up from the sediment where they are buried thus allowing the chain to knock them into the water column where they can be captured by the sampling net.

Knowing gear selectivity and how it may influence invertebrate population estimates is crucial when attempting to evaluate the impact of wave energy development. While the fact that all of the invertebrates were more frequently encountered than captured means trawl data provides a conservative population

estimate, accurate numbers are necessary to understand key features of this sandy bottom habitat and provide meaningful recommendations for future development. Monitoring programs may gain a more accurate understanding of the impacts of wave energy development if *in situ* videography is employed in conjunction with trawling activities.

DISSEMINATION OF RESULTS AND FUTURE PRODUCTS

Participation at OWET Ocean Renewable Energy Conferences

George Boehlert presented this work and our similar project, sponsored by BOEM, at the September 29-30, 2010, meeting presented by the Oregon Wave Energy Trust and EnergyOcean Pacific in Portland, Oregon. The session was entitled: BOEM Environmental Studies Program with Mary Elaine Helix, Bureau of Ocean Energy Management, Regulation and Enforcement (BOEM) and John Mason, Senior Associate, Environment International Ltd as the other panelists. This project, specifically, was also presented as a poster.

Sarah Henkel presented this work and a related protocols framework project, sponsored by BOEM and others, at the August 3-4, 2011, meeting presented by the Oregon Wave Energy Trust in Portland, Oregon. This session was entitled: Towards efficient and effective ocean renewable energy siting and permitting, Part One: Progress in Regional, Integrated, Ecosystem-Based Management. It was intended to showcase for developers, lobbyists, regulators and legislators recent progress towards making ocean renewable energy mandates and regional resource management play out in and efficient and effective way. Other panelists in part one were: Dr. Karen McLeod, Director of Science, Communication Partnership for Science and the Sea (COMPASS), Donna Schroeder, Marine Ecologist, Continental Shelf Region BOEM, and Phillip Levin, Program Manager – Ecosystem Science, Northwest Fisheries Science Center, Conservation Biology Division. This project was not presented as a poster as the 2011 meeting, but it will be presented at the 2012 meeting after project completion.

Sarah Henkel also presented this work at the following meetings and workshops:

Western Society of Naturalists: Vancouver, Washington – "Spatial and Temporal Patterns in the Distribution of Infaunal Invertebrates" November 11, 2012

Heceta Head Coastal Conference (Invited): Florence, Oregon – "Assessment of Benthic Habitats and Communities in Areas Targeted for Offshore Wave Energy Development" October 29, 2011

Research at the Intersection of Marine/Hydrokinetic Energy and the Environment, NSF-funded workshop: University of Minnesota, St. Anthony Falls Lab, *Invited speaker*: "Identifying Spatial and Temporal Patterns in Potentially Impacted Environmental Parameters" October 5-7, 2011

American Fisheries Society (Invited): Seattle, Washington – "Assessment of Benthic Habitats and Communities in Areas Targeted for Offshore Wave Energy Development" September 6, 2011

Advanced Marine Renewable Energy Instrumentation Experts Workshop: Golden, CO – *Invited Speaker*: "Surveying Benthic Habitats and Biological Communities in Areas Targeted for Offshore Wave Energy Development" April 7, 2011

Benthic Ecology Meeting: Mobile, Alabama – "Benthic Assemblages at Sites Proposed for Wave Energy Testing" March 18, 2011

Fishermen Involved in Natural Energy: Newport, OR – "Surveys of Soft-bottom Benthos off Yaquina Head, OR" November 16, 2010

Western Society of Naturalists (Poster): San Diego, CA – "Baseline survey of macroinfaunal invertebrate community at potential wave energy site off the Oregon coast" Co-author, presented by student Elizabeth Lopez, November 2010

Contributions to Environmental Characterization and Monitoring Methods

NNMREC will contribute, as appropriate, to guidance documents applicable to marine energy development. If requested by the state, NNMREC will prepare a short white paper that will detail the sampling efforts conducted by OSU, outlining the processes for conducting the sampling and analyzing the results. We are currently engaged in an effort at the federal level to provide a framework for developing protocols for evaluating a suite of potential environmental and ecological effects of offshore renewable energy. The project also will address how the protocols identified in that project relate to other national and international test facilities.

Recommendations for NNMREC Monitoring Plan

Following the deployment of the Ocean Tests Facility and associated wave energy devices NNMREC will conduct post-installation monitoring. The final requirements of the monitoring plan will be determined in association with federal, state and local agencies based on findings from this initial site characterization. In terms of invertebrate and sediment sampling, based on the findings of this project, we recommend decreasing the temporal intensity of the box core sampling. Furthermore, analysis of the duplicate grabs at each station indicates there are not significant differences in sediment characteristics or infaunal invertebrate assemblages at that small spatial scale. Thus, one grab per station is recommended, similar to the EPA NCA protocols. In terms of the trawling protocol, we generally recommend quarterly sampling to capture broad seasonal differences in the fish assemblages. However, due to some of the interesting patterns we have seen within the summer and between years, we hope to continue bi-monthly trawl sampling as a research pursuit. As NNMREC has plans to move to a full-scale test facility that may require deeper water in the future, we will pursue additional sampling outside of state waters (deeper than 50 m at Newport) to better characterize English sole and Pacific sanddab dynamics. The trawl-mounted video camera has been determined as the best method for observing large invertebrates and fish behavior.

LITERATURE CITED

Allen, M. J., T. Mikel, D. Cadien, J.E. Kalman, E.T. Jarvis, K.C. Schiff, D.W. Diehl, S.L. Moore, S. Walther, G. Deets, C. Cash, S. Watts, D.J. Pondella II, V. Raco-Rands, C. Thomas, R. Gartman, L. Sabin, W. Power, A.K. Groce, and J.L. Armstorn, 2007. Southern California Bight 2003 Regional Monitoring Program: IV Demersal fishes and megabenthic invertebrates. Southern California Coastal Water Research Project. Westminster, CA. 339 pp.

Beukema, J.J. 1974. The efficiency of the Van Veen grab compared with the Reineck box sampler. *Journal du Conseil* 35(3): 319-327.

Clarke, K.R. 1993. Non-parametric multivariate analyses of changes in community structure. Australian Journal of Ecology 18:117-143.

Davis N, Vanblaricom GR, Dayton PK. 1982. Man-made structures on marine-sediments - Effects on adjacent benthic communities. Marine Biology 70(3):295-303.

Fauchald, K. and G. Jones. 1977. Benthic macrofauna. In: Southern California baseline study final report, Vol. III, Report 2.4. Prepared for the Bureau of Land Management, Washington, D.C. (SAI-76-809-LJ).

Fauchald, K. and G. Jones. 1979. A survey of five additional southern California study sites. Report 18 in: SAl Southern California outer Continental Shelf Environmental Baseline Study, 1976/1977 (Second Year) Benthic Program. Vol. II Principal Investigators' Reports, Series 2, Reports 18-24, 720 pp.

Ferraro S.P., Cole F.A., Olsen A.R. 2006. A more cost-effective EMAP benthic macrofaunal sampling protocol. Environmental Monitoring and Assessment 116(1-3):275-290.

Callaway, R., Robinson, L., Greenstreet, S. P. R. (Eds.) 2003. Revised Methods Manual. Managing Fisheries to Conserve Groundfish and Benthic Invertebrate Species Diversity. (MAFCONS Project: EC project number Q5RS-2002-00856). Work Package 4,5 Deliverable 1.

Holland, S.M. 2008. Non-metric multidimensional scaling (MDS). *Department of Geology, University of Georgia*, 1-7.

Hogue, E.W., and A.G. Carey, Jr. 1982. Feeding ecology of 0-age flatfishes at a nursery ground on the Oregon coast. Fishery Bulletin 80:555-565.

Hyland, J., E. Baptiste, J. Kennedy, R. Kropp, S. Williams. 1991. Macroinfaunal communities of the Santa Maria Basin on the California outer continental shelf and slope. Marine Ecology Progress Series 78:147–161.

Largier J, Behrens D, Robart M. 2008. The Potential Impact of WEC Development on Nearshore and Shoreline Environments through a Reduction in Nearshore Wave Energy. *In* Nelson et al. (eds). *Developing Wave Energy in Coastal California: Potential Socio-Economic and Environmental Effects*. California

Energy Commission, PIER Energy-Related Environmental Research Program & California Ocean Protection Council. CEC-500-2008-083.

Macauley, J.M. Summers, J.K, Engle, V.D., Heitmullert, P.T. and Adams, A.M. 1993. Annual Statistical Summary: EMAP Estuaries Louisianian Province – 1993'. EPA/620/R-96/003, U.S. Environmental Research Laboratory, Gulf Breeze, Florida.

Manoukian S, Spagnolo A, Scarcella G, Punzo E, Angelini R, Fabi G. 2010. Effects of two offshore gas platforms on soft-bottom benthic communities (northwestern Adriatic Sea, Italy). Marine Environmental Research 70(5):402-410.

Martin C.J.B. and C.G. Lowe. 2010. Assemblage structure of fish at offshore petroleum platforms on the San Pedro Shelf of Southern California. Mar. Coast. Fisheries: Dynamics, Management and Ecosystem Science 2:180-194.

Nelson, W.G., J.L. Hyland, H. Lee, C.L. Cooksey, J.O. Lamberson, F.A. Cole, and P.J. Clinton. 2008. Ecological Condition of Coastal Ocean Waters along the U.S. Western Continental Shelf: 2003. EPA 620/R-08/001, U.S. EPA, Office of Research and Development, National Health and Environmental Effects Research Laboratory, Western Ecology Division, Newport, OR, 97365; and NOAA Technical Memorandum NOC NCCOS 79, NOAA National Ocean Service, Charleston, CS 29412-9110. 137 p.

Ogle, D. H. (n.d.). Length-Weight Relationship Analysis Vignette. Pages 1-10.

Ortega-Ortiz, J.G. and B. Mate. 2008. Distribution and movement patterns of gray whales off central Oregon: shore-based observations from Yaquina Head during the 2007/2008 migration. Report submitted to the Oregon Wave Energy Trust. Oregon State University Marine Mammal Institute, Newport, Oregon.

Özkan-Haller, H.T., Allan, J.C., Barth, J.A., Haller, M.C., Holman, R.A., Ruggiero, P. 2009. Baseline Observations and Modeling for the Reedsport Wave Energy Site. Prepared by Oregon State University (OSU) and the Oregon Department of Geology and Mineral Industries (DOGAMI) on behalf of Oregon Wave Energy Trust

Pacunski R.E., W.A. Palsson, H.G. Greene, D. Gunderson. 2008. Conducting visual surveys with a small ROV in shallow water. In: Reynolds J.R. and H.G. Greene, editors. Marine habitat mapping technology for Alaska. Fairbanks (AK): Alaska Sea Grant College Program, University of Fairbanks; p. 109-128.

Quinn, G. and Keough, M. 2002. Experimental Design and Data Analysis for Biologists. Cambridge University Press. USA. 557 pp.

Rhoads, D. C., Muramoto, J. A., and Ward, R. 1994. "Environmental sensors; A review of sensors appropriate for efficient assessment of submerged coastal habitats

and biological resources," SAIC report submitted to Barry A. Vittor & Associates, Inc., Mobile, AL, for the U.S. Army Engineer Waterways Experiment Station, Coastal Ecology Branch, Environmental Laboratory, Vicksburg, MS.

Rotherham, D., Broadhurst. M.K., Gray, C.A., Johnson, D.D. 2008. Developing a beam trawl for sampling estuarine fish and crustaceans: assessment of a codend cover and effects of different sizes of mesh in the body and codend. ICES Journal of Marine Science 65:687-696.

SAIC. 1986. Assessment of long-term changes in biological communities in the Santa Maria Basin and western Santa Barbara Channel – Phase I. Vol. 2. Synthesis of Findings. Prepared for Minerals Management Service, Los Angles, CA. MMS Contract No. 14-12-0001-30032.

Sheehan EV, Stevens TF, Attrill MJ. 2010. A Quantitative, Non-Destructive Methodology for Habitat Characterisation and Benthic Monitoring at Offshore Renewable Energy Developments. PLoS ONE 5(12):e14461.

Somerton, DA, and CT Glendhill (eds). 2005. Report of the National Marine Fisheries Service Workshop on Underwater Video Analyses. U.S. Dep. Commerce, NOAA Tech. Memo. NMFS-F/SPO-68, 69 p. Accessed July 5, 2011 at http://www.st.nmfs.noaa.gov/st7/advanced_sampling/NOAA_Technical_Memorandum_SPO_68.pdf

Summer, J.K. 2001. Ecological conditon of the estuaries of the Atlantic and Gulf Coasts of the United States. Environ. Toxicol. Chem. 20: 99-106.

Terlizzi A, Bevilacqua S, Scuderi D, Fiorentino D, Guarnieri G, Giangrande A, Licciano M, Felline S, Fraschetti S. 2008. Effects of offshore platforms on soft-bottom macro-benthic assemblages: A case study in a Mediterranean gas field. Marine Pollution Bulletin 56(7):1303-1309.

Terrill S., S. Kramer, P. Nelson, D. Zajanc. 2010. Baseline data and power analysis for the OWET Dungeness crab and fish baseline study. H.T. Harvey & Associates Report to OWET. 40 p.

Troffe, P.M., Levings, C.D., Piercey, G.E., Keong, V. 2005. Fishing gear effects and ecology of the sea whip (Halipteris willemoesi (Cnidaria: Octocorallia: Pennatulacea)) in British Columbia, Canada: preliminary observations. Aquatic Conservation: Marine and Freshwater Ecosystems 15:523-533.

U.S. EPA 1990. Environmental Monitoring and Assessment Program Overview. EPA/600/9-90/001. U.S. Environmental Protection Agency, Office of Research and Development, Washington, DC.

U.S. EPA 2001. Environmental Monitoring and Assessment Program (EMAP): National Coastal Assessment Quality Assurance Project Plan 2001-2004', EPA/620/R-01/002. U.S. Environmental Protection Agency, Office of

Research and Development, National Health and Environmental Research Laboratory, Gulf Ecology Division, Gulf Breeze Florida.

U.S. EPA 2004. National Coastla Condition Report II. EPA-620/R-03/003. U.S. Environmental Protection Agency, Office of Research and Development and Office of Water, Washington, DC.

Vanerman, N., and E.W.M. Stienen. 2009. Chapter 8: Seabirds & offshore wind farms: monitoring results 2008. Pages 152- 221 *In* Degraer, S. & Brabant, R. (eds.). 2009. *Offshore wind farms in the Belgian part of the North Sea: State of the art after two years of environmental monitoring*. Royal Belgian Institute for Natural Sciences, Management Unit of the North Sea Mathematical Models. Marine ecosystem management unit.

Ware, S.J. and Kenny, A.J. 2011. Guidelines for the Conduct of Benthic Studies at Marine Aggregate Extraction Sites (2nd Edition). Marine Aggregate Levy Sustainability Fund, 80 pp.

Wolfson A, Vanblaricom GR, Davis D, Lewbel GS. 1979. The marine life of an offshore oil platform. Marine Ecology Progress Series 1:81-89.

Yanase, K., Eayrs, S., Arimoto, T. 2009. Quantitative analysis of the behavior of the flatheads (Platycephalidae) during trawl capture process as determined by real-time multiple observations. Fisheries Research 96:28-39.

Yoklavich M.M. and V. O'Connell. 2008. Twenty years of research on demersal communities using the Delta submersible in the Northeast Pacific. Pages 143-155 In (Reynolds JR and HG Greene, eds.) Marine Habitat Mapping Technology for Alaska, Alaska Sea Grant College Program, University of Alaska Fairbanks.

10: Threatened, Endangered and Candidate Species in Oregon

The State of Oregon and the federal government maintain separate lists of threatened and endangered (T&E) species. These are species whose status is such that they are at some degree of risk of becoming extinct. Under State law (ORS 496.171-496.192) the Fish and Wildlife Commission through ODFW maintains the list of native wildlife species in Oregon that have been determined to be either "threatened" or "endangered" according to criteria set forth by rule (OAR 635-100-0105).

Plant listings are handled through the Oregon Department of Agriculture. Most invertebrate listings are handled through the Oregon Natural Heritage Program. Under federal law the U.S. Fish and Wildlife Service and National Oceanic and Atmospheric Administration share responsibility for implementing the federal Endangered Species Act of 1973 (Public Law 93-205, 16 U.S.C. § 1531), as amended. In general, USFWS has oversight for land and freshwater species and NOAA for marine and anadromous species. In addition to information about species already listed, the USFWS Oregon Field Office maintains a list of Species of Concern.

Additional information about the federal programs in place in Oregon can be found at the following websites:

- U.S. Fish and Wildlife-Oregon (http://www.fws.gov/oregonfwo)
- Northwest Region of NOAA-Fisheries (http://www.nwr.nmfs.noaa.gov)

Threatened, Endangered, and Candidate Fish and Wildlife Species in Oregon

(T=threatened, E=endangered, C=candidate, DPS=Distinct Population Segment)

Threatened, Endangered, and Candidate Fish and Wildlife Species in Oregon

The State of Oregon and the federal government maintain separate lists of threatened and endangered (T&E) species. These are species whose status is such that they are at some degree of risk of becoming extinct.

Under State law (ORS 496.171-496.192) the Fish and Wildlife Commission through ODFW maintains the list of native wildlife species in Oregon that have been determined to be either “threatened” or “endangered” according to criteria set forth by rule (OAR 635-100-0105).

Plant listings are handled through the Oregon Department of Agriculture.

Most invertebrate listings are handled through the Oregon Natural Heritage Program.

Under federal law the U.S. Fish and Wildlife Service and National Oceanic and Atmospheric Administration share responsibility for implementing the federal Endangered Species Act of 1973 (Public Law 93-205, 16 U.S.C. § 1531), as amended. In general, USFWS has oversight for land and freshwater species and NOAA for marine and anadromous species. In addition to information about species already listed, the USFWS-Oregon Field Office maintains a list of Species of Concern.

Additional information about the federal programs in place in Oregon can be found at the following websites:
• U.S. Fish and Wildlife-Oregon (http://www.fws.gov/oregonfwo)
• Northwest Region of NOAA-Fisheries (http://www.nwr.nmfs.noaa.gov)

Threatened, Endangered, and Candidate Fish and Wildlife Species in Oregon
(T=threatened, E=endangered, C=candidate, DPS=Distinct Population Segment)

Common Name	Scientific Name	State status	Federal status
FISH			
Borax Lake Chub	*Gila boraxobius*	E	E
Bull Trout (Range-wide)	*Salvelinus confluentus*		T
Columbia River Chum Salmon	*Oncorhynchus keta*		T
Foskett Speckled Dace	*Rhinichthys osculus* ssp	T	T
Green sturgeon (Southern DPS)	*Acipenser medirostris*		T
Hutton Spring Tui Chub	*Gila bicolor* ssp.	T	T
Lahontan Cutthroat Trout	*Oncorhynchus clarki henshawi*	T	T
Lost River Sucker	*Deltistes luxatus*	E	E
Lower Columbia River Chinook Salmon	*Oncorhynchus tshawytscha*		T
Lower Columbia River Coho Salmon	*Oncorhynchus kisutch*	E	T
Lower Columbia River Steelhead	*Oncorhynchus mykiss*		T
Middle Columbia River Steelhead	*Oncorhynchus mykiss*		T
Modoc sucker	*Catostomus microps*		E
Oregon Chub	*Oregonichthys crameri*		T
Oregon Coast Coho Salmon	*Oncorhynchus kisutch*		T
Pacific Eulachon/Smelt (Southern DPS)	*Thaleichthys pacificus*		T
Shortnose Sucker	*Chasmistes brevirostris*	E	E
Snake River Chinook Salmon (Fall)	*Oncorhynchus tshawytscha*	T	T
Snake River Chinook Salmon (Spring/Summer)	*Oncorhynchus tshawytscha*	T	T
Snake River Sockeye Salmon	*Oncorhynchus nerka*		E
Snake River Steelhead	*Oncorhynchus mykiss*		T
Southern Oregon Coho Salmon	*Oncorhynchus kisutch*		T
Upper Columbia River Spring Chinook Salmon	*Oncorhynchus tshawytscha*		E
Upper Columbia River Steelhead	*Oncorhynchus mykiss*		T
Upper Willamette River Chinook Salmon	*Oncorhynchus tshawytscha*		T

Common Name	Scientific Name	State status	Federal status
Upper Willamette River Steelhead	*Oncorhynchus mykiss*		T
Warner Sucker	*Catostomus warnerensis*	T	T
AMPHIBIANS AND REPTILES			
Columbia spotted frog	*Rana luteiventris*		C
Green Sea Turtle	*Chelonia mydas*	E	E
Leatherback Sea Turtle	*Dermochelys coriacea*	E	E
Loggerhead Sea Turtle	*Caretta caretta*	T	T
Oregon spotted frog	*Rana pretiosa*		C
Pacific Ridley Sea Turtle	*Lepidochelys olivacea*	T	T
BIRDS			
Bald Eagle	*Haliaeetus leucocephalus*	T	
Brown Pelican	*Pelecanus occidentalis*	E	E
California Least Tern	*Sterna antillarum browni*	E	E
Marbled Murrelet	*Brachyramphus marmoratus*	T	T
Northern Spotted Owl	*Strix occidentalis caurina*	T	T
Short-tailed Albatross	*Diomedea albatrus*	E	E
Streaked horned lark	*Eremophila alpestris strigata*		C
Western Snowy Plover	*Charadrius alexandrinus nivosus*	T	T (Coastal population only)
Yellow-billed cuckoo	*Coccyzus americanus*		C
MAMMALS			
Blue Whale	*Balaenoptera musculus*	E	E
Columbian White-tailed Deer(Lower Columbia River population only)	*Odocolieus virginianus leucurus*		E
Fin Whale	*Balaenoptera physalus*	E	E
Fisher	*Martes pennanti*		C
Gray Whale	*Eschrichtius robustus*	E	
Gray Wolf	*Canis lupus*	E	E
Humpback Whale	*Megaptera novaeangliae*	E	E
Kit Fox	*Vulpes macrotis*	T	
North Pacific Right Whale	*Eubalaena japonica*	E	E
Northern (Steller) Sea Lion	*Eumetopias jubatus*		T
Sea Otter	*Enhydra lutris*	T	T
Sei Whale	*Balaenoptera borealis*	E	E
Sperm Whale	*Physeter macrocephalus*	E	E
Washington Ground Squirrel	*Spermophilus washingtoni*	E	
Wolverine	*Gulo gulo*	T	

11: Biological Assessment

The following Biological Assessment (BA) is provided as a reference as it includes information about existing environmental conditions at the project site, as well as potential effects on species listed or proposed for listing as threatened and endangered and their critical habitat. It also evaluates the potential effects of the proposed project on Essential Fish Habitat and establishes project compliance with the Marine Mammal Protection Act. It is presently being revised per input from resources agencies for the purposes of the Endangered Species Act Section 7 consultation for the proposed project.

BIOLOGICAL ASSESSMENT

NORTHWEST NATIONAL MARINE RENEWABLE ENERGY CENTER AND OREGON STATE UNIVERSITY WAVE ENERGY TEST FACILITY PROJECT

PREPARED FOR:

U.S. Department of Energy
Golden Field Office
1617 Cole Boulevard
Golden, CO 80401

PREPARED BY:

ICF International
615 SW Alder Street, Suite 200
Portland, OR 97205
503-525-6145

January 2012

ICF International. 2012. *Biological Assessment. Northwest National Marine Renewable Energy Center and Oregon State University Wave Energy Test Facility Project*. January. Portland, OR. Prepared for U.S. Department of Energy, Golden, CO.

Contents

List of Tables v
List of Figures v
List of Acronyms and Abbreviations vi

Page

Chapter 1 Regulatory Context and Consultation History 1-1
1.1 Background 1-1
1.2 Location 1-3
1.3 Purpose and Need 1-5
Chapter 2 Description of the Action 2-1
2.1 Project Site and Existing Conditions 2-1
2.2 Testing Scenarios 2-2
2.3 Instrumentation Buoy 2-3
2.3.1 Data Acquisition System and Telemetry 2-4
2.3.2 Load Bank 2-5
2.3.3 Instrumentation Power 2-5
2.3.4 Other Components 2-5
2.4 Testing Vessel 2-7
2.5 Wave Energy Converter Devices 2-7
2.5.1 WET-NZ Multi-Mode Marine Power Conversion 2-8
2.5.2 Ocean Power Technologies PowerBuoy® 2-9
2.5.3 Embley Energy SPERBOY™ 2-9
2.5.4 Ocean Energy Ltd. OEBuoy 2-10
2.5.5 Floating Power Plant A/S FPP Poseidon 2-10
2.6 Mooring Systems 2-11
2.6.1 Instrumentation Buoy Mooring System 2-12
2.6.2 Testing Vessel Mooring 2-13
2.6.3 Wave Energy Converter Device Mooring System 2-14
2.7 Installation 2-14
2.7.1 Construction and Transportation to Project Site 2-14
2.7.2 Mobilization of the Instrumentation Buoy 2-15
2.7.3 Mobilization of the Testing Vessel 2-15
2.7.4 Mobilization of the Wave Energy Conversion Device 2-15
2.7.5 Anchoring and Mooring Installation 2-15

2.7.6 Instrumentation Buoy and Wave Energy Conversion Device Installation 2-16
2.7.7 Testing Vessel Installation 2-16
2.7.8 Commissioning Testing 2-17
2.8 Operations and Maintenance 2-17
2.9 Removal and Decommissioning 2-19
2.10 Permits and Approvals 2-19
2.11 Measures to Minimize or Avoid Impacts 2-20
2.11.1 Planning and Development 2-20
2.11.2 Navigation and Transportation 2-20
2.11.3 Safety and Survivability 2-21
2.11.4 Biological Resources 2-22
2.12 Research and Monitoring 2-22
2.12.1 Benthic Fish and Invertebrates Study 2-23
2.12.2 Acoustic Study 2-24
2.12.3 Electromagnetic Field Study 2-25
2.13 Interdependent and Interrelated Actions 2-25
Chapter 3 Description of the Action Area 3-1
Chapter 4 Description of the Species that May Be Affected 4-1
4.1 Marbled Murrelet 4-1
4.2 Western Snowy Plover 4-2
4.3 Short-Tailed Albatross 4-4
4.4 Chinook Salmon, Lower Columbia River ESU 4-4
4.5 Chinook Salmon, Upper Willamette River ESU 4-6
4.6 Chinook Salmon, Upper Columbia River Spring-Run ESU 4-6
4.7 Chinook Salmon, Snake River Spring/Summer-Run ESU 4-7
4.8 Chinook Salmon, Snake River Fall-Run ESU 4-7
4.9 Coho Salmon, Southern Oregon/Northern California Coast ESU 4-8
4.10 Coho Salmon, Oregon Coast ESU 4-10
4.11 Coho Salmon, Lower Columbia River ESU 4-11
4.12 Green Sturgeon 4-12
4.12.1 Northern DPS 4-12
4.12.2 Southern DPS 4-12
4.13 Eulachon, Southern DPS 4-15
4.14 Leatherback Sea Turtle 4-16
4.15 Green Sea Turtle 4-17
4.16 Loggerhead Sea Turtle, Pacific DPS 4-18
4.17 Olive Ridley Sea Turtle 4-18

4.18 Steller Sea Lion, Eastern DPS 4-19
4.19 Killer Whale, Southern Resident DPS 4-21
4.20 Humpback Whale 4-23
4.21 Blue Whale 4-24
4.22 Fin Whale 4-25

Chapter 5 Environmental Baseline 5-1

5.1 Geology and Sediments 5-1
5.2 Oceanography 5-2
5.3 Acoustic Environment 5-2
5.4 Water Quality 5-3
5.5 Zooplankton and Fish Larvae 5-4
5.6 Benthic Invertebrates 5-5
5.7 Fish 5-6
5.8 Sea Turtles 5-6
5.9 Marine Birds 5-7
5.10 Marine Mammals 5-7

Chapter 6 Analysis of Effects 6-1

6.1 Direct Effects 6-1
6.1.1 Marbled Murrelet 6-1
6.1.2 Western Snowy Plover 6-7
6.1.3 Short-Tailed Albatross 6-8
6.1.4 Chinook Salmon, Lower Columbia River ESU 6-8
6.1.5 Chinook Salmon, Upper Willamette River ESU 6-11
6.1.6 Chinook Salmon, Upper Columbia River Spring-Run ESU 6-11
6.1.7 Chinook Salmon, Snake River Spring/Summer-Run ESU 6-11
6.1.8 Chinook Salmon, Snake River Fall-Run ESU 6-11
6.1.9 Coho Salmon, Southern Oregon/Northern California Coast ESU 6-11
6.1.10 Coho Salmon, Oregon Coast ESU 6-12
6.1.11 Coho Salmon, Lower Columbia River ESU 6-12
6.1.12 Green Sturgeon, Southern DPS 6-12
6.1.13 Eulachon, Southern DPS 6-13
6.1.14 Leatherback Sea Turtle 6-13
6.1.15 Green Sea Turtle 6-14
6.1.16 Loggerhead Sea Turtle 6-14
6.1.17 Olive Ridley Turtle 6-14
6.1.18 Steller Sea Lion, Eastern DPS 6-14
6.1.19 Killer Whale, Southern Resident DPS 6-15

6.1.20 Humpback Whale 6-16
6.1.21 Blue Whale 6-16
6.1.22 Fin Whale 6-16
6.2 Indirect Effects 6-16
6.3 Interrelated and Interdependent Effects 6-16
Chapter 7 Effects Determinations 7-1
7.1 Marbled Murrelet 7-1
7.2 Western Snowy Plover 7-2
7.3 Short-Tailed Albatross 7-2
7.4 Chinook Salmon, Lower Columbia River ESU 7-2
7.5 Chinook Salmon, Upper Willamette River ESU 7-3
7.6 Chinook Salmon, Upper Columbia River Spring-Run ESU 7-3
7.7 Chinook Salmon, Snake River Spring/Summer Run ESU 7-3
7.8 Chinook Salmon, Snake River Fall-Run ESU 7-3
7.9 Coho Salmon, Southern Oregon/Northern California Coast ESU 7-4
7.10 Coho Salmon, Oregon Coast ESU 7-4
7.11 Coho Salmon, Lower Columbia River ESU 7-4
7.12 Green Sturgeon, Southern DPS 7-5
7.13 Eulachon, Southern DPS 7-5
7.14 Leatherback Sea Turtle, Eastern DPS 7-6
7.15 Green Sea Turtle 7-6
7.16 Loggerhead Sea Turtle 7-6
7.17 Olive Ridley Sea Turtle 7-6
7.18 Steller Sea Lion, Eastern DPS 7-7
7.19 Killer Whale, Southern Resident DPS 7-7
7.20 Humpback Whale 7-8
7.21 Blue Whale 7-8
7.22 Fin Whale 7-8
Chapter 8 Essential Fish Habitat Assessment 8-1
8.1 Regulatory Background 8-1
8.2 Project Description 8-1
8.3 Essential Fish Habitat Designations 8-1
8.4 Potential Effects on Marine Biological Resources and Essential Fish Habitat 8-7
Chapter 9 Conclusion 9-1
Chapter 10 References 10-1
10.1 Written References 10-1
10.2 Personal Communications 10-13

Tables

Table		Page
Table 1-1.	Species and Critical Habitat Addressed in this Biological Assessment	1-2
Table 2-1.	Project Site Coordinates	2-1
Table 2-2.	Permits and Approvals	2-20
Table 5-1.	Water Quality Data from ODEQ Site 30244	5-3
Table 8-1.	Life Stages and General Habitats of Coastal Pelagic Species	8-2
Table 8-2.	Species and Life Stages Associated with Representative Habitat Types in Designated Essential Fish Habitat	8-3
Table 8-3.	Life Stages and General Habitats of Pacific Salmon	8-5

Figures

Figure		Page
Figure 1-1.	Project Site	1-4
Figure 2-1.	Approximate Appearance of the Instrumentation Buoy (6-meter NOMAD boat-shape), WEC Device, and Wave Measuring Buoy	2-4
Figure 2-2.	Approximate Appearance of the Buoy (Standard 3-meter Discus Buoy)	2-4
Figure 2-3.	Hydrophone Mounted on Lander, Prior to Deployment	2-6
Figure 2-4.	WET-NZ Device	2-8
Figure 2-5.	Ocean Power Technologies PB150 PowerBuoy®	2-9
Figure 2-6.	Embley Energy SPERBOY™	2-10
Figure 2-7.	OEBuoy (1:4 Scale)	2-10
Figure 2-8.	Poseidon 37 (Shown with Wind Turbine Configuration)	2-11
Figure 2-9.	WET-NZ Mooring Configuration	2-11
Figure 2-10.	Drag Anchor for Use with the Instrumentation Buoy	2-12
Figure 2-11.	Multiple Suction Pile Anchors	2-12
Figure 2-12.	Instrumentation Buoy Mooring Line Composition, Side View	2-13
Figure 2-13.	Instrumentation Buoy Moored with Concrete Block Anchors, Studded Chains	2-13
Figure 2-14.	Conceptual Wave Energy Converter Device Mooring Configuration, Side View	2-14
Figure 3-1.	Project Action Area	3-2

Acronyms and Abbreviations

ABS	American Bureau of Shipping
AIS	automatic identification system
ALB	adjustable load bank
BA	biological assessment
CFE	Code of Federal Regulations
Corps	U.S. Army Corps of Engineers
dB	decibels
DCH	Designated Critical Habitat
DOE	U.S. Department of Energy
DPS	distinct population segments
EA	environmental assessment
EFH	Essential Fish Habitat
EMF	electromagnetic fields
EPA	U.S. Environmental Protection Agency
ESA	Endangered Species Act
ESU	Evolutionarily Significant Unit
FINE	Fisherman Involved in Natural Energy
FR	Federal Register
GLOBEC	Global Ocean Ecosystems Dynamics
GPS	global positioning system
HAPC	habitat areas of particular concern
kW	kilowatt
LASAR	Laboratory Analytical Storage and Retrieval Database
LED	light-emitting diode
Magnuson-Stevens Act	Magnuson-Stevens Fishery Conservation and Management Act
MW	megawatt
NEPA	National Environmental Policy Act
NMFS	National Marine Fisheries Service
NNMREC	Northwest National Marine Renewable Energy Center
NOMAD	Navy Oceanographic Meteorological Automatic Device
ODEQ	Oregon Department of Environmental Quality
OPT	Ocean Power Technologies
OSU	Oregon State University
PADA	power analysis and data acquisition
PCE	primary constituent elements
Proposed Project	NNMREC and OSU Mobile Ocean Test Berth Project
PUD	People's Utilities District
SEF	Sediment Evaluation Framework
TBT	tributyltin
USFWS	U.S. Fish and Wildlife Service
USP	underwater substation pod
WEC	wave energy conversion
WET-NZ	Wave Energy Technology-New Zealand)

Chapter 1
Regulatory Context and Consultation History

1.1 Background

One of the most promising fields of alternative energy development is wave energy, or the conversion of the energy in ocean waves into electrical energy. New technologies designed to harness this energy source are being developed by laboratories and entrepreneurs worldwide. Many of these technologies are ready for field trials, but are not sufficiently mature to be connected to the electrical grid for commercial power production. Field test facilities are needed to evaluate the electrical energy produced by these devices. Currently, there are no such facilities in western North America, although the region has one of the highest wave energy potentials on Earth.

The Northwest National Marine Renewable Energy Center (NNMREC), led by Oregon State University (OSU), was established through the U.S. Department of Energy (DOE) Wind and Water Power Program and local funding to support wave and tidal energy development for the United States. The NNMREC and OSU Wave Energy Test Facility Project (Proposed Project) is a pioneering effort to deliver a capability for testing the output of wave energy conversion (WEC) devices. This Proposed Project highlights OSU's leadership role in developing marine renewable technology and accelerating its commercialization in a manner compatible with ocean and coastal environments and coastal users. As the lead for NNMREC's wave energy work, OSU is the logical technical agent for the Proposed Project, which would be located approximately 3 kilometers (2 miles) off the coast of Oregon near the city of Newport, Oregon.

The purpose of this biological assessment (BA) is to address the effects of the Proposed Project on species listed as endangered or threatened, or proposed for such listing, under the Endangered Species Act (ESA). The proposed action evaluated in this BA is the DOE's proposal to authorize and fund the Proposed Project. Accordingly, the DOE is the lead federal agency on this project, and is responsible for this BA and for evaluating the Proposed Project under the National Environmental Policy Act (NEPA), which is being achieved by preparation of an environmental assessment (EA). This BA also serves as the ESA Section 7 compliance document for issuance of a Department of the Army permit authorizing deployment of the Proposed Project in waters of the United States.

Early coordination and preconsultation with the U.S. Fish and Wildlife Service (USFWS) and the National Marine Fisheries Service (NMFS) occurred in the following emails and phone conversations:

- April 8, 2010: conference call to present project overview, attended by representatives of DOE, NNMREC, and NMFS.
- May 4, 2010: call between representatives of ICF International (ICF) and USFWS to establish USFWS jurisdictional species to be addressed.
- May 17, 2010: call between representatives of ICF and NMFS to discuss NMFS jurisdictional species to be addressed.
- May 26, 2010: NMFS provided a list of NMFS jurisdictional species to be addressed.

This BA, prepared by ICF on behalf of DOE, addresses the proposed action in compliance with Section 7(c) of the ESA of 1973, as amended. Section 7 ensures that, through consultation (or conferencing for proposed species) with the USFWS and NMFS, federal actions do not jeopardize the continued existence of any threatened, endangered, or proposed species, or result in the destruction or adverse modification of critical habitat. This BA also incorporates an evaluation of the potential effects of the Proposed Project on Essential Fish Habitat (EFH), in compliance with the Magnuson-Stevens Fishery Conservation and Management Act (Magnuson-Stevens Act), as amended in 2007. This BA also establishes Proposed Project compliance with the Marine Mammal Protection Act, as amended in 2007. The species and designated critical habitat addressed in this document are listed in Table 1-1. Conservation measures are identified in this BA to avoid or minimize any adverse effects of the Proposed Project on listed species and critical habitat.

Table 1-1. Species and Critical Habitat Addressed in this Biological Assessment

Name	Scientific Name	Status	Citation	Jurisdictional Agency
Marbled murrelet	*Brachyramphus marmoratus*	T DCH	57 FR 45328 61 FR 26256	USFWS
Western snowy plover	*Charadrius alexandrinus nivosus*	T DCH PCH	58 FR 12864 70 FR 56970 76 FR 16046	USFWS
Short-tailed albatross	*Phoebastria albatrus*	E	65 FR 46643	USFWS
Chinook salmon, lower Columbia River ESU	*Oncorhynchus tshawytscha*	T DCH	70 FR 37160 70 FR 52630	NMFS
Chinook salmon, upper Willamette River ESU	*Oncorhynchus tshawytscha*	T DCH	70 FR 37160 70 FR 52630	NMFS
Chinook salmon, upper Columbia River spring-run ESU	*Oncorhynchus tshawytscha*	E DCH	70 FR 37160 70 FR 52630	NMFS
Chinook salmon, Snake River spring/summer run ESU	*Oncorhynchus tshawytscha*	T DCH	70 FR 37160 64 FR 57399	NMFS
Chinook salmon, Snake River fall-run ESU	*Oncorhynchus tshawytscha*	T DCH	70 FR 37160 58 FR 68543	NMFS
Coho salmon, Southern Oregon/ Northern California coast ESU	*Oncorhynchus kisutch*	T DCH	70 FR 37160 64 FR 24049	NMFS
Coho salmon, Oregon coast ESU	*Oncorhynchus kisutch*	T DCH	73 FR 7816 73 FR 7816	NMFS
Coho salmon, lower Columbia River ESU	*Oncorhynchus kisutch*	T	70 FR 37160	NMFS
Green sturgeon, southern DPS	*Acipenser medirosris*	T DCH	71 FR 17757 74 FR 52300	NMFS
Eulachon	*Thaleichthys pacificus*	T DCH	75 FR 13012 76 FR 65324	NMFS
Leatherback turtle	*Dermochelys coriacea*	E DCH PCH	39 FR 19320 44 FR 17710 75 FR 319	NMFS
Green sea turtle	*Chelonia mydas*	T DCH	64 FR 14052 63 FR 46693	NMFS
Loggerhead sea turtle, Pacific DPS	*Caretta caretta*	T	76 FR 58868	NMFS

Name	Scientific Name	Status	Citation	Jurisdictional Agency
Olive (=Pacific) Ridley sea turtle	*Lepidochelys olivacea*	T	43 FR 32800	NMFS
Steller sea lion, eastern DPS	*Eumetopias jubatus*	T DCH	63 FR 24345 58 FR 45269	NMFS
Killer whale, Southern Resident DPS	*Orcinus orca*	E DCH	70 FR 69903 71 FR 69054	NMFS
Humpback whale	*Megaptera novaeangliae*	E	35 FR 18319	NMFS
Blue whale	*Balaenoptera musculus*	E	35 FR 18319	NMFS
Fin whale	*Balaenoptera physalus*	E	35 FR 18319	NMFS

DCH = Designated critical habitat; DPS = Distinct Population Segment; E = Endangered;
ESU = Evolutionarily Significant Unit; FR = *Federal Register*; NMFS = National Marine Fisheries Service
PCH = Proposed critical habitat; T = Threatened; USFWS = U.S. Fish and Wildlife Service

1.2 Location

The Proposed Project would be located within a 3.4-square-kilometer (1-square-nautical-mile) site (project site) in the Pacific Ocean off the Oregon coast near the city of Newport (Figure 1-1). The final project site was refined through environmental studies and consultation with stakeholders and other interested parties, including the NNMREC research team, Hatfield Marine Science Center (HMSC), Fisherman Involved in Natural Energy (FINE), and Oregon Sea Grant. Over a 24-month period, beginning prior to scoping and during more than 12 months of preliminary project development, NNMREC conducted a site selection process, which involved stakeholders and interested parties and resulted in a variety of site criteria. Additional details regarding the location of the project site and the site selection process are described in Section 2.1, Project Site and Existing Conditions.

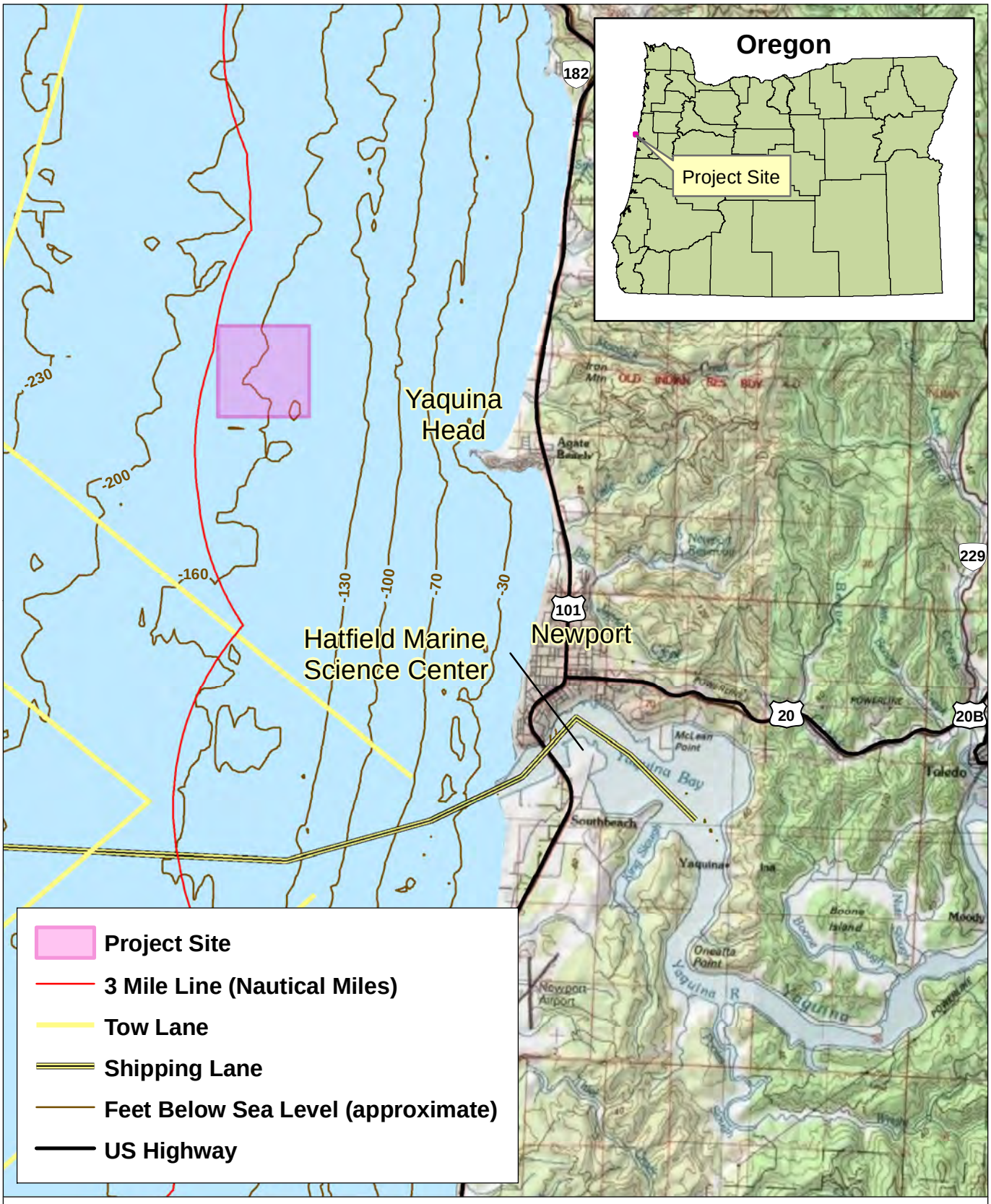

Source: National Geographic Society TOPO, courtesy of ESRI

Kilometers 0 1.5 3

Nautical Miles 0 1.5 3

Figure 1-1
Project Site

1.3 Purpose and Need

The DOE's Wind and Water Power Program supports the development and deployment of advanced water power devices such as those that capture energy from waves, tides, ocean currents, and ocean thermal variables. The goal of the program is to help industry harness this renewable, emissions-free resource to generate environmentally sustainable and cost-effective electricity. To meet this goal, DOE supports the design and development of devices and components as well as the deployment and testing of those devices. DOE also supports efforts to accelerate market development of wave energy technologies by funding projects that reduce the time and costs associated with siting water power projects. Another programmatic goal is to support research into the effects of marine energy technologies on aquatic ecosystems and marine species.

DOE's proposed action is to provide funding to NNMREC to support the operation of a facility to perform off-grid testing of WEC devices. Providing financial assistance to support the Proposed Project would meet the DOE Wind and Water Power Program's objectives to support the design, deployment and testing of wave energy devices in an open-water setting, study the environmental effects of a range of wave energy technologies, and support the market development of environmentally sustainable technologies that harness wave energy to generate electricity.

Continued research and testing is needed to develop and advance different marine renewable energy technologies for cost-effective use by the industry and to evaluate the technical aspects, performance characteristics, and environmental impacts of developing marine renewable energy. Full-scale open ocean testing facilities for wave applications are necessary to evaluate the technology, optimize energy extraction, and research environmental impacts. However, there currently is no open-ocean facility in United States waters where these devices can be tested off the electrical grid. Because testing facilities connected to the electrical grid are more costly to develop and take longer to construct, a facility independent from the electrical grid would simplify and expedite ocean-based energy development. In addition, the installation and operation of a power cable required for a grid-connected facility would constitute a mechanism for potential impacts otherwise absent in a non-grid-connected facility. Therefore, an independent facility may also minimize environmental impacts that would be anticipated with a grid-connected system.

NNMREC has identified a project site off of the Oregon coast, near the city of Newport. Installation of the Proposed Project in this area is both technically and economically feasible, and has the necessary physical characteristics to successfully operate the Proposed Project and meet the DOE's objectives. Site criteria essential to the intended operation of the Proposed Project include water depth of approximately 55 meters (180 feet), and the availability of a 3.4-square-kilometer (1-square-nautical-mile) project site that is exposed to unobstructed waves from the open ocean. For safe, feasible, and environmentally sustainable construction, deployment, and operation of the Proposed Project, it was determined that the project site should be located near HMSC in Newport, Oregon, sufficiently close to onshore roads and port facilities, at a distance to shore of 2.4 to 4.8 kilometers (1.5 to 3 miles), sufficiently distant from the Yaquina River mouth, over a soft or sandy seafloor, and in an area with comparatively low levels of marine traffic and highly visible to marine navigation.

The Proposed Project would provide WEC device developers with access to a testing site in an open ocean environment where the response of their device to wave effects could be tested in a real-world setting. The lack of a grid connection would eliminate environmental impacts associated with a cable to shore and would allow for relatively expeditious removal of the project components from the site.

Chapter 2
Description of the Action

2.1 Project Site and Existing Conditions

The project site would be located in the Pacific Ocean, approximately 3 kilometers (2 miles) off the Oregon coast near the city of Newport, Oregon (Figure 1-1). The vast majority of the operations, equipment, and infrastructure associated with the Proposed Project would be limited to a 3.4-square-kilometer (1-square-nautical-mile) site (project site) that was selected though environmental studies and consultation with stakeholders and other interested parties. The whole of the project site would be less than 5 kilometers (3 miles) from shore and within Oregon State territorial waters. The coordinates marking the four corners of the project site are presented in Table 2-1.

Table 2-1. Project Site Coordinates

Latitude	Longitude[1]
N44.69782444900	W124.14623042100
N44.69857399700	W124.12288614500
N44.68192375900	W124.12183891000
N44.68117442700	W124.14517645600

[1] Lambert Conformal Conic NAD83.

The project site was identified through consultation and cooperation with interested groups and individuals, including the NNMREC research team, HMSC, FINE, and Oregon Sea Grant. Over a 24-month period, beginning prior to scoping and during more than 12 months of preliminary project development, NNMREC conducted a site selection process, which involved stakeholders and interested parties and resulted in a variety of site criteria. Site criteria essential to the intended operation of the Proposed Project include

- water depth of approximately 55 meters (180 feet),
- proximity to port facilities,
- exposure to unobstructed waves from the open ocean, and
- availability of a 3.4-square-kilometer (1-square-nautical-mile) project site.

During the site selection process, additional criteria were identified that represent conditions highly desirable for the successful and effective operation of the Proposed Project. These include criteria identified by NNMREC, outside parties, and stakeholders. It was determined that the project site should be

- located near HMSC in Newport, Oregon, at a distance to shore of 2.4 to 5 kilometers (1.5 to 3 miles) (i.e., within Oregon territorial waters);
- over a soft or sandy seafloor;
- in an area with comparatively low levels of marine traffic but highly visible to marine navigation;

- sufficiently close to onshore roads to allow emergency access for salvage purposes if necessary;
- sufficiently distant from the Yaquina River mouth to avoid hydraulic sediment transport or other technical issues related to proximity to the river;
- located either north or south of the direct westerly line-of-sight from Yaquina Head; and
- located away from a recently discovered rocky reef directly off of Yaquina Head.

NNMREC began coordinating with FINE in April 2009 to identify an area for the Proposed Project that would meet the project criteria, but would also minimize impacts on the fishing industry. NNMREC has met with FINE on 13 occasions to date. During the early meetings, general site locations were discussed. In later meetings, alternative sites to the north and the south of the project site were discussed. In the last of these meetings, NNMREC and FINE agreed on a final project site where the Proposed Project requirements would be met, and impacts on the fishing industry would be minimized.

Based on the criteria listed above, and the considerations of the FINE Committee, the final 3.4-square-kilometer (1-square-nautical-mile) project site has been identified as the most feasible and preferred location. During the site selection process, NNMREC narrowed its consideration away from areas that did not meet the essential criteria for site selection, or would otherwise be infeasible based on the desirable established criteria. This site was posted in the Newport Times on April 26, 2011, and the Oregonian on April 20, 2011, for final consideration by the public. After a 30-day period no objections were voiced. The site location was then registered with the Oregon Territorial Sea Plan under development by the Oregon Department of Land Conservation and Development.

2.2 Testing Scenarios

Operation of the Proposed Project would entail deploying up to two WEC devices and their associated moorings in the project site, operating the devices, and recovering the devices. WEC device mooring systems would consist of up to a four-point mooring configuration that may be left in place between WEC deployments. Project operations would also involve deploying a manned vessel carrying a test device or up to two instrumentation buoys to be connected to the WEC devices for testing. The instrumentation buoys could receive power from the WEC devices and would analyze and record technical data on the power generation. The instrumentation buoys would have their own mooring systems that would consist of up to a four-point mooring and would be connected to the WEC devices by a floating or submerged cable at a distance of approximately 100 meters (328 feet). The instrumentation buoys would be unmanned during the test. Tests would run for 1 to 6 months during the months of May to October, although the WEC devices might remain on site for longer, as noted above. Depending on the preferences, any of three possible testing scenarios could be implemented at the project site:

1. The WEC developers could deploy WEC devices and monitor their power generation using equipment contained within the device. Such deployments would typically last at least several months and could continue for as long as 12 months, thus, allowing WEC developers to see how their devices handle the severe winter storms that affect this region. NNMREC may help developers with the design and construction of the internal testing equipment.
2. The WEC devices could be monitored using test equipment deployed on a vessel. In this case the WEC devices would be connected to the vessel by a floating or submerged electrical cable at a

distance of approximately 100 meters (328 feet). The vessel would be manned at all times and located using its own anchor. Due to the expense of keeping a manned vessel on site, such tests would not be expected to last more than 10 days. The WEC devices might remain on site for a longer period of time to demonstrate the survivability of the device. In this case, the power generation unit would either be taken off line, or directed toward an on-WEC load (e.g., a resistor bank).

3. The WEC devices could be monitored using test equipment deployed in self-contained instrumentation buoys. The instrumentation buoys would have their own mooring system that would consist of up to a four-point mooring configuration and would be connected to the WEC devices by a floating or submerged cable at a distance of approximately 100 meters (328 feet). The instrumentation buoys would be unmanned during the test. Tests would run for 1 to 6 months, although the WEC device itself might remain on site for longer, as noted above.

2.3 Instrumentation Buoy

The unmanned instrumentation buoy would be moored approximately 100 meters (328 feet) from the WEC devices under test and an umbilical cable carrying power and data signals would connect the two. Power generated by the WEC device would be dissipated in a load bank on board the instrumentation buoy. Switch gear and power conversion equipment located on-board the instrumentation buoy would provide control of the load bank. Data would be transmitted from the WEC under test to the instrumentation buoy via a fiber optic connection with the umbilical cable. Wave data recorded by a wave measuring instrument would also be transmitted to the instrumentation buoy or directly to shore, via wireless telemetry. The instrumentation buoy would have its own mooring system that would consist of up to a four-point mooring. Tests would run for 1 to 6 months during the months of May to October, although the WEC device itself might remain on site for longer, as noted above.

The instrumentation buoy would be an off-the-shelf buoy similar to those used for at-sea meteorological stations. Its hull would likely be one of two potential designs. It could be a traditional boat shape with dimensions of 6 meters (length) by 3.1 meters (width) by 9 meters (height[1]) similar to the Navy Oceanographic Meteorological Automatic Device (NOMAD) buoys operated by the National Oceanic and Atmospheric Administration (NOAA) (Figure 2-1) or it could be a 3-meter (10-foot) discuss hull buoy (Figure 2-2). In addition to the load bank, the instrumentation buoy would include data acquisition systems (DAS), telemetry systems, and other miscellaneous instruments and equipment. Four watertight hatches would provide access into the buoy. Radio antennae, communication equipment, monitoring devices (seabird detection, atmospheric monitors, cameras, etc.), power systems (solar, wind, and diesel generator), the load bank, and U.S. Coast Guard-approved lighting would be mounted atop the buoy. A NMFS-approved passive deterrent, such as a bull rail with netting, would prevent marine mammal use of the buoy as a haul-out.

[1] This measurement includes the total height of the buoy, from the top end of its masts, down to the bottom of the hull. Approximately when in the water, the tip of the highest mast would extend approximately 5 meters above the waterline.

Figure 2-1. Approximate Appearance of the Instrumentation Buoy (6-meter NOMAD boat-shape), WEC Device, and Wave Measuring Buoy

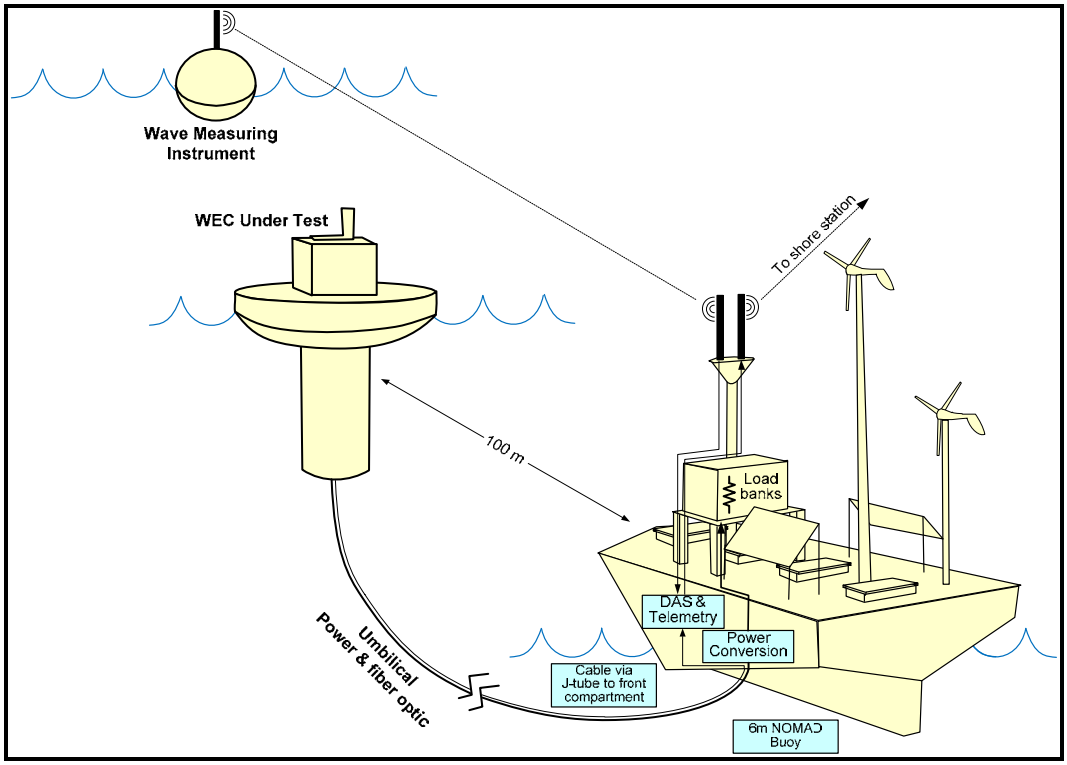

2.3.1 Data Acquisition System and Telemetry

Figure 2-2. Approximate Appearance of the Buoy (Standard 3-meter Discus Buoy)

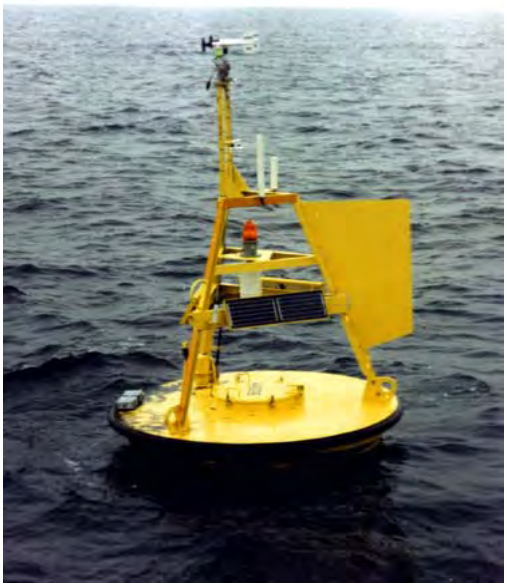

Source: NOAA 2006.

The DAS unit would measure the output current, voltage, phase, and frequency from a variety of conceivable WEC devices. The DAS unit would use a programmable logic controller to acquire systems data such as modal response (heave, pitch, yaw, and roll), WEC device power analysis outputs, and global positioning system (GPS) location. Using the buoy's radio antenna, this data would be transmitted to shore. The DAS unit would also store and back up data on an onboard computer. At times, the DAS unit may be powered by commercially available, marine-grade batteries and potentially, the connected WEC device.

Communications between the WEC device under test and the instrumentation buoy would be provided by fiber optic cables with the umbilical cable. Connectivity between the instrumentation buoy and the shore station would be provided via wireless telemetry. Both systems would be capable of providing real-time continuous monitoring of the WEC device and instrumentation buoy. The shore side receiver would be mounted on an existing antenna owned by the Central Lincoln People's Utility District. The

telemetry system would also include a short-range wireless Ethernet connection allowing for service vessels to access the system via laptop computer. The DAS unit would be deployed in any of the three testing scenarios discussed in Section 2.2, Testing Scenarios: fully contained in the WEC device, on the deck of a vessel, or inside a self-contained instrumentation buoy.

2.3.2 Load Bank

Because the WEC device would not be connected to the electrical grid, resistive load banks may be used as the electrical load for the WEC devices under test. Load banks may be located high enough above the waterline to avoid significant seawater spray penetrating the load bank enclosures or housed below deck in one of the buoy bulkheads, depending on the size and cooling capacity of the load bank. Cabinet space and cooling provisions would be included in the design and would allow for the future use of a grid emulator to simulate connection to the on-shore electrical grid. Load banks could also be deployed on board a manned testing vessel.

2.3.3 Instrumentation Power

The instrumentation buoy would have the capacity to independently generate power to operate all on-board systems under normal and worst-case conditions. Instrumentation power would be generated by a combination of deck-mounted solar panels, wind generation, and a diesel-powered generator. The wind and solar power generated (with battery backup storage) would be adequate for normal operations under typical conditions. The diesel generator would not be required frequently; rather, it would only be necessary under atypical conditions where solar and wind generators could not provide enough instrumentation power and battery backup was exhausted. The instrumentation buoy would contain up to 240 gallons of diesel fuel in three baffled aluminum tanks. These tanks would be tested pursuant to the requirements outlined in 33 CFR 183.510. The battery would be designed to meet all applicable U.S. Coast Guard and environmental requirements.

2.3.4 Other Components

Other components that are likely to be included in the instrumentation buoy as part of the Proposed Project are described below.

- **Bilge pumps.** Bilge pumps would address minor leaks. Two pumps could be independently equipped with a level alarm and activated by a level float. The wireless communications system would activate and transmit an alarm to NNMREC and any identified party, allowing for immediate action. The pumps would be powered by marine-grade batteries, which would be completely sealed to prevent hydrogen buildup.
- **Markers and auxiliary sensors.** Components to increase the visibility of the instrumentation buoy would include a marine-grade beacon light, radar reflector, and GPS. The instrumentation buoy would also include an indication, warning, and alarm subsystem designed to monitor system status, provide warnings for negative trends, and provide alarms for conditions requiring operator intervention. On-board video cameras would be mounted on the deck of the instrumentation buoy. Using a low frame rate, they would monitor the deck and water immediately surrounding the instrumentation buoy. The cameras could be monitored remotely and in real time with their signal broadcast to the shore-side station through the telemetry system.

- **Automatic identification system (AIS).** An AIS transmitter would provide navigation assistance for locating the instrumentation buoy under moorage and in the unlikely event the instrumentation buoy breaks free from its mooring. The AIS would provide other vessels with the location and identity of the instrumentation buoy at all times. The AIS would also be configured to communicate the location and identity of other components of the project including the WEC device, the wave-measurement buoy, and any surface or marker buoys.
- **Cable interface.** A cable interface would be made using a marine-grade connector(s) designed to withstand harsh marine environments. This style of connector would allow the submarine power cable to couple to the instrumentation buoy quickly and efficiently on the deck, without the need to access the inner watertight compartments. An input disconnect protective device would enable the complete electrical disconnection of the instrumentation buoy from the cable that could be operated without entering any compartment of the instrumentation buoy containing energized devices. The interface would be constructed of steel or other metal so that marine life could not become exposed to electrical current by chewing, gnawing, or pecking through the cable.
- **Associated monitoring equipment.** Associated monitoring equipment would be deployed to support the instrumentation buoy and collect data to be used in physical and environmental studies. Most monitoring equipment would be deployed within the 3.4-square-kilometer (1-square-nautical-mile) project site. This equipment may include acoustic wave and current profilers, acoustic Doppler current profilers, waveriders (wave-measurement buoy accelerometers), acoustic hydrophones, plankton-collection plates, water-quality monitoring devices (e.g., dissolved oxygen, temperature, salinity), fish tag receivers, and electromagnetic frequency monitoring equipment. However, some equipment—hydrophones mounted on a lander (Figure 2-3) being a likely possibility—may be deployed in a monitoring area anywhere within a 9.3 kilometer (5 nautical mile)-radius from the project site to collect reference samples for comparative analyses. In all cases, equipment would either be resting on the sea floor or held in place by a single, temporary anchor and line. Wave-measurement buoys would be located sufficiently close to the instrumentation buoy to allow them to transmit data to the instrumentation buoy via wireless telemetry. Other monitoring equipment may or may not have this capability.

Figure 2-3. Hydrophone Mounted on Lander, Prior to Deployment

- **Umbilical cable.** An umbilical cable would carry power and data signals between the WEC device and the instrumentation buoy. Power generated by the WEC device would be transmitted through this cable to the instrumentation buoy for monitoring, recording, and dissipation. The cable may either be suspended beneath the surface by floats or may be submerged to the sea floor. In either case, marking and lighting would be provided as directed by the U.S. Coast Guard.

The cable would be approximately 2.5 to 7.5 centimeters (1 to 3 inches) in diameter enabling the instrumentation buoy and the WEC under test to be approximately 100 meters (328 feet) apart.

2.4 Testing Vessel

As described in Section 1.3, Purpose and Need, of this BA, the WEC device could be monitored using test equipment mounted on a deployed vessel. The vessel would likely be OSU's research vessel, the *Pacific Storm* (the vessel), which is a 26-meter (84-foot), steel hulled, converted fishing vessel. The vessel has berthing for up to 12 people (crew and scientists), two showers, and three heads. It is equipped with a knuckle boom with a 5,443-kilogram (6-ton) lifting capacity and a 9-meter (30-foot) reach mounted to the back of the living area for loading/unloading supplies, boats, etc. The aft deck area measures 7 meters (24 feet) long by 6.7 meters (22 feet) wide. The vessel is powered by a Caterpillar 3412 engine enabling the vessel to reach a top speed of 9.5 knots. The vessel also has a 300 horsepower hydraulic engine and two electrical generators that provide 110 and 220 volt power. The vessel can carry a maximum of 56,781 liters (15,000 gallons) of fuel, 10,599 liters (2,800 gallons) of fresh water, 379 liters (100 gallons) of lube oil, and 1,514 liters (400 gallons) of hydraulic oil (Oregon State University Marine Mammal Institute 2011).

2.5 Wave Energy Converter Devices

Because wave energy generation is in the early stages of development, a wide variety of technology designs are being conceptualized, designed, and tested. DOE's Marine and Hydrokinetic Technology Database[2]—which also includes tidal, current, and thermal devices—lists over 250 different technologies (U.S. Department of Energy 2011). Known WEC devices can be grouped into the following categories.

- **Wave attenuators.** Wave attenuators are devices that are designed to be aligned along with the predominant direction of the waves. Examples include long, multi-segment floating devices with their axis oriented parallel to the direction of the incoming wave. In this example, the device captures energy as the wave passes along the device, causing it to flex where the segments connect, which drives hydraulic pumps or other generators.
- **Pitching/surging/heaving/sway devices.** Pitching/surging/heaving/sway devices are any of several device designs that capture wave energy directly without a collector by using relative motion between a float, flap, or membrane and a fixed reaction point. The float, flap, or membrane oscillates along a given axis depending on the device and mechanical energy is extracted from the relative motion of the body part relative to its fixed reference.
- **Oscillating water columns.** Oscillating water columns are partially submerged structures in which water enters a chamber through a subsurface opening. Wave action causes the captured water column to move up and down like a piston. This action forces the air trapped above the water column to move through an opening connected to a turbine. There are shore-based and floating models.

[2] Available online at http://www1.eere.energy.gov/windandhydro/hydrokinetic/default.aspx.

- **Overtopping devices.** Overtopping devices are partially submerged structures that have reservoirs that are filled by incoming waves to levels above the average surrounding ocean. The water is then released back out to sea from the reservoir through a turbine generator. There are shore-based and floating models.
- **Point absorbers.** Point absorbers are floating or submerged structures with components that capture energy from the vertical motion of waves. This motion drives electromechanical or hydraulic generators. Point absorbers may be fully or partly submerged, they may be floating or rigidly anchored, and they are relatively small compared to the wave length.

The specific WEC device prototypes and models that would be tested as part of the Proposed Project are not presently known, with the exception of the Wave Energy Technology- New Zealand (WET-NZ) device (noted below in Section 2.5.1), which has a planned deployment at the project site in the summer of 2012. This BA does not examine the potential impacts of every possible WEC device design category known or available; instead, the analysis includes only those general WEC device designs that are reasonably expected as part of this Proposed Project, which include pitching/surging/heaving/sway, point absorber and oscillating water column devices capable of operating in water depths of approximately 55 meters (180 feet). Examples of these designs are described below and include the most probable types of devices that could be tested with the Proposed Project. These examples provide a basis for the analysis of effects of the Proposed Project.

2.5.1 WET-NZ Multi-Mode Marine Power Conversion

WET-NZ is a research and development collaboration program run by Industrial Research Limited, a Crown Research Institute, and Power Projects Limited, a privately owned Wellington-based company. The program seeks to develop a wave energy device that maximizes engineering efficiency through the novel use of direct-drive and adaptive response to changes in wave motion. The WET-NZ wave energy converter (Figure 2-4) is a point absorber device with some special characteristics that enable it to extract energy from passing waves. The device is floating but the majority of it is submerged so that as much of it as possible interacts directly with the wave energy. An object immersed in a wave field is subjected to complex motions – heave (up and down), surge (back and forth) and pitch (a rolling back and forth motion). Most devices extract only a small proportion of the total energy of a passing wave. The WET-NZ device is designed to operate in transitional / deep water waves (20 to 100 meters [67 to 328 feet]) and is designed to extract as much energy as possible from more than one type of motion. As mentioned above, the WET-NZ design is the only specific design which presently has a planned deployment at the project site. The device to be deployed at the project site is nominally half scale. The hull is approximately 18 meters (59 feet) long and 3.5 meters (11.5 feet) wide. Wet mass (flooded) is nominally 50 tonnes (110,231 pounds) and displacement volume is around 95% (i.e. the structure is almost fully immersed – the water line is nominally at the axle center). The float weighs 4 tonnes (8,818 pounds) with a displacement volume of 50%. A deployment period of approximately 3 months is planned at the project site during the summer of 2012.

Figure 2-4. WET-NZ Device

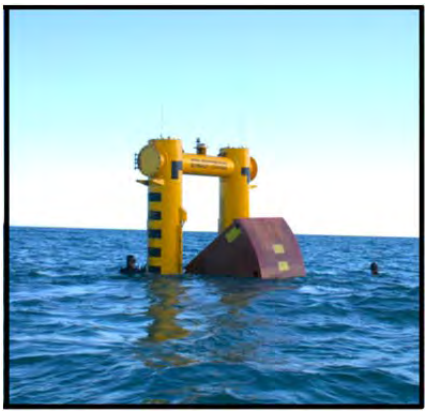

2.5.2 Ocean Power Technologies PowerBuoy®

The PowerBuoy® design, developed by Ocean Power Technologies (OPT), is one of the most widely deployed WEC device designs in the world. Presently, a 10-buoy test array of the PB150 PowerBuoy® is proposed for deployment in Reedsport, Oregon (Figure 2-5). The PB150 is a utility-scale 150 kilowatt (kW) buoy that—in the initial design—contains hydraulic fluid, which is cycled as the buoy moves up and down with the waves. The moving fluid or mechanical parts are used to spin a generator, which produces electricity. The buoy is approximately 35 meters (115 feet) tall (of which approximately 9 meters [30 feet] project above the water's surface) and 11 meters (36 feet) in diameter. It is held in place by a three-point mooring system (Reedsport OPT Wave Park 2010).

Figure 2-5. Ocean Power Technologies PB150 PowerBuoy®

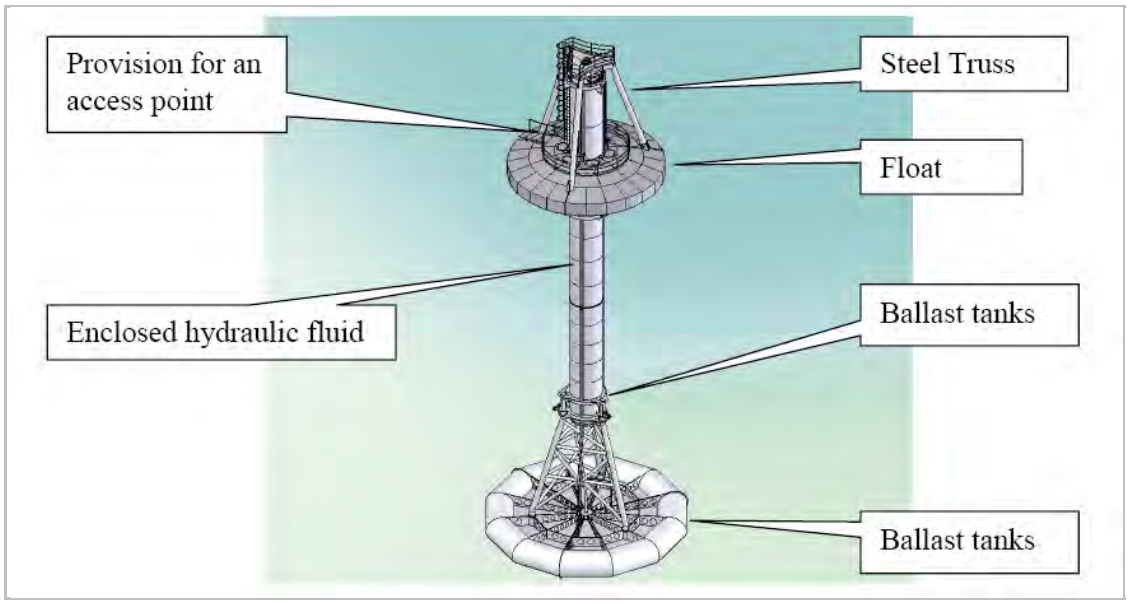

Source: Reedsport OPT Wave Park 2010.

2.5.3 Embley Energy SPERBOY™

The SPERBOY™ (Figure 2-6), developed and patented by Embley Energy, is a floating oscillating water column device consisting of a buoyant structure with a submerged, enclosed column. Housed above the oscillating water column on top of the buoy is the plant: turbines, generators, and associated system facilities. Air displaced by the oscillating water column is passed through turbine generators above the water's surface. The device can be deployed in deep water to maximize energy production. The entire body floats and maintains optimum hydrodynamic interactions for the prevailing wave spectrum, maximizing energy capture. The total height of the device is approximately 50 meters (164 feet), with 35 meters (115 feet) of the device below water. The diameter of the SPERBOY™ is approximately 30 meters (98 feet[3]) (U.S. Department of Energy 2008).

[3] Dimensions represent maximum envisaged size of a full-scale commercial unit

Figure 2-6. Embley Energy SPERBOY™

Source: U.S. Department of Energy 2008.

2.5.4 Ocean Energy Ltd. OEBuoy

The OEBuoy device is a floating system with the mouth of the oscillating water column facing away from the wave direction that uses wave energy to compress air in a chamber and pump it through an air turbine system (Figure 2-7). The design isolates the power conversion system above and away from the seawater and also provides high-speed air flow to the turbine. The OEBuoy has undergone several years of development and testing. In 2006 and 2007, Ocean Energy Ltd. conducted a winter sea trial on the 25,401-kilogram (28-ton), 1:4-scale OEBuoy prototype at the Irish Marine Institute test site in the waters off of Galway, Ireland (U.S. Department of Energy 2008). OEBuoy is the only device of its kind to have undergone 2 years of rigorous testing and is now ready for market (U.S. Department of Energy 2011).

Figure 2-7. OEBuoy (1:4 Scale)

Source: U.S. Department of Energy 2008.

2.5.5 Floating Power Plant A/S FPP Poseidon

The Poseidon is based on a hydraulic power take-off system. It is designed for an offshore location in areas with considerable variation in wave activity levels and has a high efficiency and energy production. The Poseidon uses a float that absorbs the energy from incoming waves, and uses a piston pump to transform energy from the wave into water pressure. That water is then sent through a turbine to generate electricity. Poseidon was developed by the Danish company, Floating Power Plant A/S (FPP). The Poseidon 37, a 327,000-kilogram (360-ton) and 37-meters (121-foot)-

wide hybrid renewable energy demonstration plant (Figure 2-8), was launched in 2008 off the coast of Lolland in Denmark (Floating Power Plant 2011). Although the Poseidon 37 can be configured with wind turbines, any Poseidon device tested as part of the Proposed Project would include wave energy components only.

Figure 2-8. Poseidon 37 (Shown with Wind Turbine Configuration)

Source: Floating Power Plant 2011.

FPP has also developed and tested Poseidon models of the following sizes (Floating Power Plant A/S 2011):

- 2.4 meter (7.9-foot) wave front, system test
- 15 meter (49-foot) wave front, floater test
- 4 meter (13-foot) wave front, system test

Figure 2-9. WET-NZ Mooring Configuration

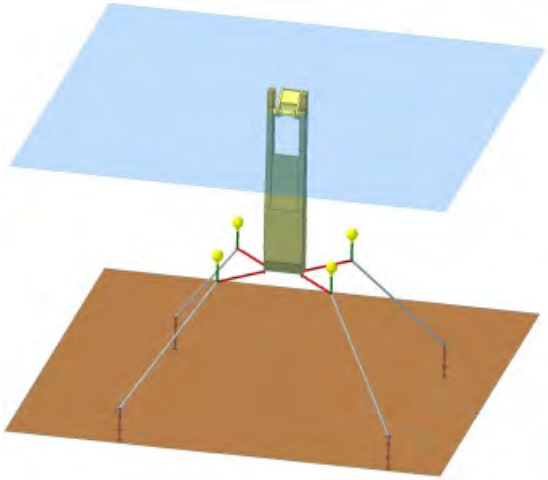

2.6 Mooring Systems

The instrumentation buoy or vessel and the WEC devices under test would each be secured by independent mooring systems providing sufficient distance between the instrumentation buoy or vessel and WEC device to eliminate collision and accommodate the umbilical cable. The mooring system for the vessel would consist of the typical, single on-board anchor. The mooring system for the instrumentation buoy and WEC device hardware is described in Section 2.6.1, Instrumentation Buoy Mooring System.

The mooring systems would be able to hold the instrumentation buoy or vessel and WEC device within a prescribed distance from each other regardless of wind, wave, and current conditions. This area of movement is known as the *watch circle*. The instrumentation buoy or vessel and WEC device would be each moored with sufficient separation of their respective watch circles to minimize collision while not overstressing the power cable. The mooring would place the WEC device in front

of the instrumentation buoy or vessel in relation to the direction of the incident wave front, ensuring that each incoming wave would first contact the WEC device with its full, unabated force.

As described in Section 2.5.1, the WET-NZ multi-mode wave device is scheduled for a 2012 deployment at the project site. The WET-NZ device will likely use a four-point mooring system and a series drag anchor to keep the device in place. The proposed grid pattern for the anchors is approximately 40 m square with a pair of sides orientated in line with the dominant wave crests (Figure 2-9).

2.6.1 Instrumentation Buoy Mooring System

The final design of the mooring system would occur after the final design of the instrumentation buoy; therefore, the specific details of the mooring components are not known at this time. However, based on the general parameters of the design of the instrumentation buoy, a limited number of mooring configurations would be expected. This BA analyzes the potential impacts of all possible and likely mooring systems.

Figure 2-10. Drag Anchor for Use with the Instrumentation Buoy

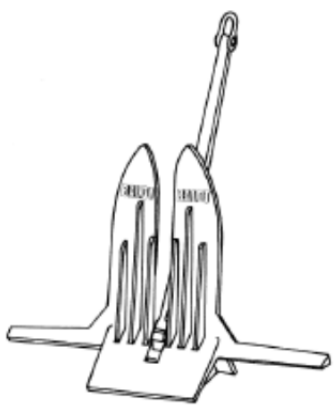

The mooring system for the instrumentation buoy would consist of up to four mooring lines and anchors designed to resist wind, wave, and current forces, as well as the forces associated with the umbilical cable. The anchors for the buoy are likely to be 3-ton concrete block anchors, but could also be other maritime anchor designs such as drag anchors, weighing up to 9,000 pounds (Figure 2-10). Suction-installed pile (Figure 2-11) or plate anchors may also be used.

Figure 2-11. Multiple Suction Pile Anchors

Source: Sound & Sea Technology Engineering Solutions

In one possible configuration, each of the instrumentation buoy's mooring legs would consist of segments of up to 3.8-centimeter (1.25-inch), Grade 3 studless chain, 5.4-centimeter (2.125-inch), double-braid nylon line, and 7.6-centimeter (3-inch) studless chain, as illustrated in Figure 2-12. The mooring lines would be spaced equally (at 120-degree angles for 3 lines and 90-degree angles for four lines) and would be designed to be buoyed off and left in place when not in use.

Figure 2-12. Instrumentation Buoy Mooring Line Composition, Side View

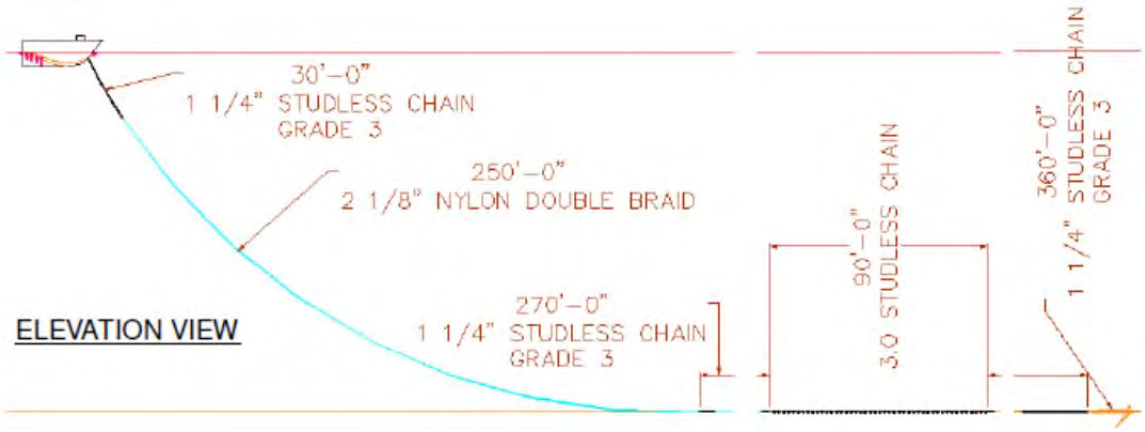

Alternatively, the instrumentation buoy could be moored using lines composed of 1-inch stud link chain connecting the anchors to intermediate mooring buoys, and centenary lines from the mooring buoys to the instrumentation buoy as illustrated in Figure 2-13.

Figure 2-13. Instrumentation Buoy Moored with Concrete Block Anchors, Studded Chains

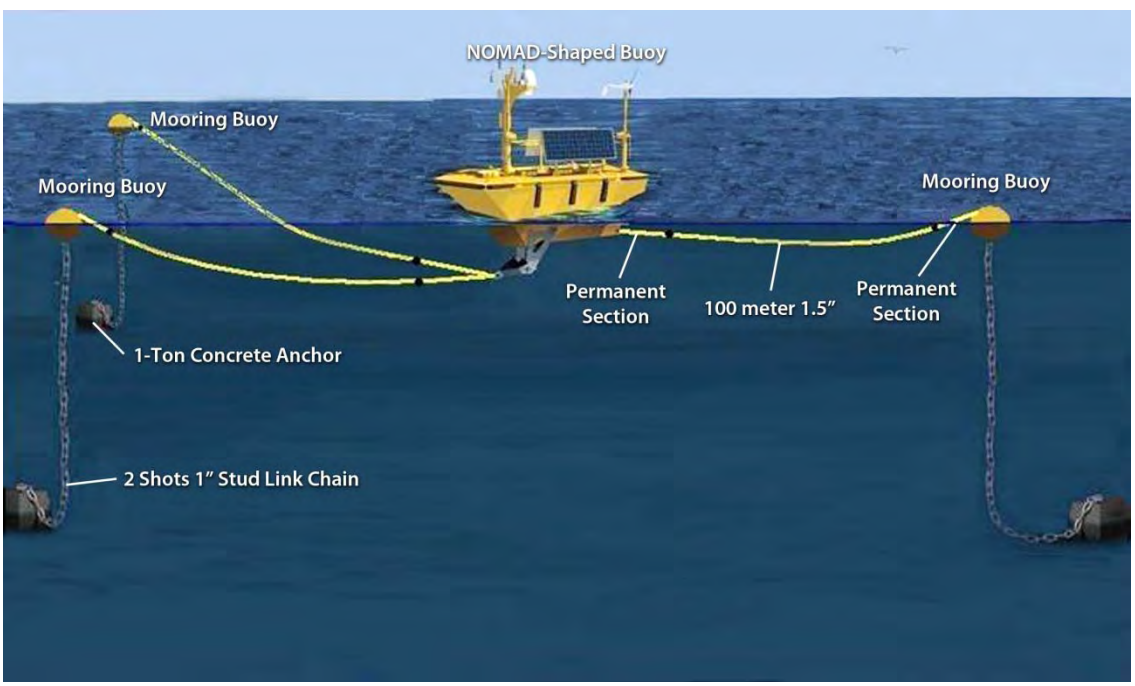

2.6.2 Testing Vessel Mooring

As described in Section 1.3, Purpose and Need, the DAS, Load Bank, and other testing equipment could be installed onboard a testing vessel. The vessel's mooring system consists of a 600-pound (272 kilograms) Danforth anchor with 30.5 meters (100 feet) of chain attached to it, followed by 137 meters (450 feet) of 3.2 centimeters (1.25-inch) Samson double-braid nylon line, followed by 183 meters (600 feet) of 1.9 centimeter (0.75-inch) steel cable.

2.6.3 Wave Energy Converter Device Mooring System

For most WEC device prototypes, there is little information on mooring designs that is available to the public. Although the detailed mooring system for WEC devices has not yet been designed and will vary depending on the final location of the moorings within the project site, it is probable that the design of a mooring system at the site would require relatively taut moorings capable of testing large devices (Figure 2-14).

Figure 2-14. Conceptual Wave Energy Converter Device Mooring Configuration, Side View

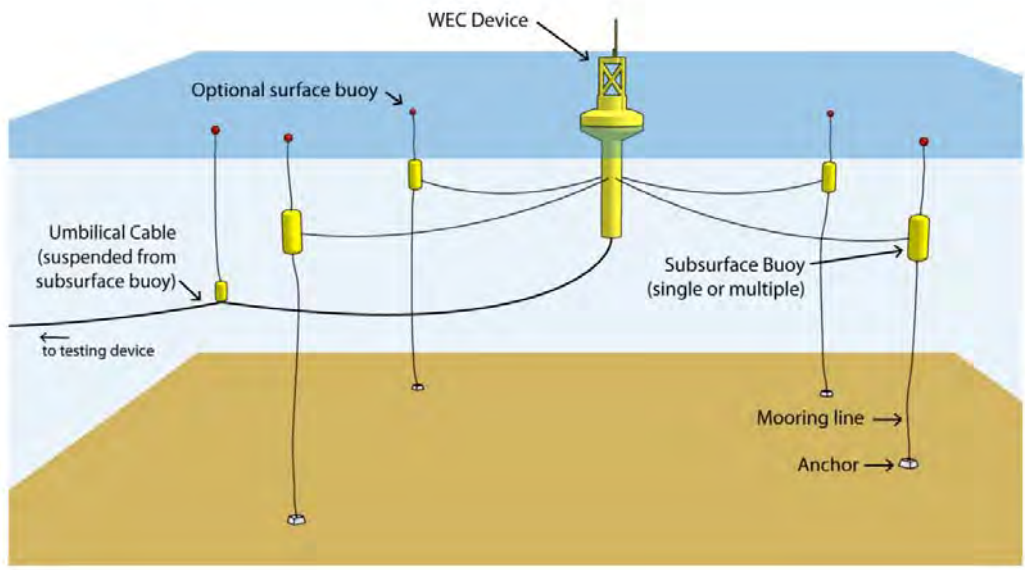

Anticipated anchoring systems could include drag anchors, deadweight anchors, suction-installed pile anchors, and plate anchors. Generally a three- to four-point anchoring layout would be used. It is also anticipated that the WEC device and optional subsurface floats would be coated with an antifouling paint prior to installation to prevent marine life from colonizing on these project components. The specific mooring configuration would vary depending on the WEC device under test. WEC device developers would be required to submit detailed mooring plans to NNMREC for review and approval. NNMREC would require that all WEC devices to be tested as part of the Proposed Project use only TBT-free antifouling paints and coatings.

2.7 Installation

2.7.1 Construction and Transportation to Project Site

The instrumentation buoy would be stored at and deployed from HMSC in Newport, Oregon. The WEC devices would be constructed and tested at a location selected by the WEC device developer. Once preliminary WEC device testing is completed by the WEC device developers, the devices would be shipped to Newport for deployment. The WEC devices would be transported by truck, barge, or marine tow transport. Identification of applicable permits required by NNMREC for shipment would be the responsibility of the WEC device developer. If transported from a foreign build location,

proper permits and licenses would be required to enter the United States. The testing vessel has already been constructed and is presently located at its home port at HMSC.

2.7.2 Mobilization of the Instrumentation Buoy

HMSC or a local pier area would serve as the mobilization site for the instrumentation buoy deployment. Specific characteristics of the staging area are not yet known and would be added during the final design phase. General characteristics include the availability of power or generators; lighting, security; a load-worthy pier or dock; a crane, crane counterweight assembly area, and crane pad area; and a sufficient laydown area for logistics support boxes.

Prior to deployment, pier-side tests would check the operation and integration of all instrumentation buoy systems. These in-water tests would verify the readiness of systems for mooring, connection, power dissipation, and shore communications. Bay trials of the instrumentation buoy would be performed, if necessary, prior to deployment.

2.7.3 Mobilization of the Testing Vessel

The vessel's home port is HMSC. If used for testing WEC devices, vessel deployment would originate and end at an existing pier at HMSC. No new facilities or infrastructure would be required to support the deployment of the vessel.

2.7.4 Mobilization of the Wave Energy Conversion Device

The Port of Newport or other local pier area would serve as the material-receiving and laydown area for the WEC device. Mooring materials such as mooring line, buoys, and anchors would be staged at this site for the mooring installation vessel to pick up and transport to the testing site.

2.7.5 Anchoring and Mooring Installation

Once assembled on the mooring installation vessel in Newport, Oregon, instrumentation buoy mooring components would be installed according to a mooring installation plan or instrumentation buoy deployment plan (not yet prepared). This plan would be developed during final design to reflect the site and depth conditions of the mooring site and would dictate how the anchors and mooring lines would be installed. It would also contain provisions to ensure the safety of the overall operation. Using predefined coordinates for anchor location identified in this plan, the installation vessel would lower each anchor into place with the mooring lines and attached anchor chain. If plate or pile anchors were to be used, they would be installed through suction rather than drilling or percussive driving. An acoustic release or similar device would be used to recover the lowering line. The mooring lines would be tied off to a properly lit surface and/or subsurface buoy for temporary storage. The exact installation location would be recorded for future reference.

The WEC device anchors and mooring system may be installed by NNMREC, the WEC developer, or a third-party installer. WEC device mooring installation would be coordinated with the instrumentation buoy mooring installation to ensure the orderly installation of the mooring components and to minimize mobilization cycles. The mooring system for the WEC devices—although designed to meet site-specific conditions and the specifications of a number of possible WEC devices—would be similar in design and installation to the instrumentation buoy mooring.

The mooring deployment vessel likely would be a coastal or oceangoing tug based out of Astoria or the Portland area. The same or a similar vessel likely would likely used during WEC deployment (discussed below). During the Finavera WEC tests performed off the Oregon coast in 2007, two vessels were used to deploy the WEC and its moorings: the *Betsy L*, a Foss Maritime Industries tug operating out of Portland, and the *Salvage Chief*, an oceangoing tug operated out of Astoria by the Fred Devine Diving & Salvage Company. The *Betsy L* is 22 meters (73 feet) long and weighs 97,069 kilograms (107 tons), typical of the tugs that serve deep-draft vessels in the Columbia River, and capable of towing nearly any WEC from an Oregon port to the deployment site. The *Salvage Chief* is 62 meters (203 feet) long and weighs 444,521 kilograms (490 tons) and has worked dozens of salvage jobs in the Pacific Northwest. The region has few other vessels appropriate for this sort of work, so there is a high likelihood that one or the other of these two vessels would be used for WEC mooring and WEC device deployment.

If utilized, a testing vessel would not require the installation of mooring components. Rather, it would be held in location in the project site with its own anchor.

2.7.6 Instrumentation Buoy and Wave Energy Conversion Device Installation

In Newport, the instrumentation buoy would be loaded onto a crane-equipped vessel large enough to deploy the buoy, and would then be taken to the project site for attachment to its mooring system. Alternatively the instrumentation buoy could be towed from the dock to the site, a procedure which requires a substantially smaller vessel. The deployment vessel would facilitate the connection of the instrumentation buoy with its moorings, likely assisted by a smaller work skiff. Instrumentation Buoy deployment would be accomplished in 1 work day.

Instrumentation buoy installation likely would occur between May and September. The months between October and April would generally be avoided for any planned installation because weather conditions are typically not favorable for safe marine operations; however, the mooring system may be installed during these months if appropriate weather conditions exist.

The WEC device deployment plan would be unique to each specific WEC device. It is anticipated that the WEC device would be towed or barged to the site, turned upright (if appropriate) and attached to the WEC device mooring. Vessels likely to be used for this task are described above (Section 2.7.5, Anchoring and Mooring Installation).

When ready, the power cable would be placed and the ends connected to the instrumentation buoy and WEC device. A detailed plan would be developed by the WEC device developer to address this installation and connection to the WEC device.

2.7.7 Testing Vessel Installation

Under the scenario in which the test equipment would be contained on board a manned vessel, installation would not be required. Rather, the vessel would navigate to the predetermined coordinates and anchor there temporarily for the duration of the test.

2.7.8 Commissioning Testing

Once installed onto the mooring system, the instrumentation buoy would undergo a complete commissioning systems test including onsite tests and tests conducted remotely to confirm the working condition of remote communications and data acquisition systems. Commissioning testing would occur prior to installation of the WEC device. The WEC device developer would also conduct a series of commissioning tests to verify proper installation and connectivity of the WEC devices once installed on the mooring. All tests would be documented and reports issued at the conclusion of each testing phase. Tests would also be conducted on the testing equipment if contained on board a manned vessel.

2.8 Operations and Maintenance

The DAS, load bank, and other equipment may be contained onboard the testing vessel. In this scenario, the WEC device would be connected to the equipment on the vessel by a floating or submerged umbilical cable enabling the separation between the vessel and the WEC device to be approximately 100 meters (328 feet). The vessel would be manned at all times and located using its own anchor. Such tests would not be expected to last more than 10 days, at which time, the vessel would disconnect from the WEC device and return to shore.

Testing conducted by equipment on board a manned vessel would be expected to occur in the months of May to October only. Though single test events would not exceed 10 days; the testing vessel may engage in multiple tests per season.

Once installed, the instrumentation buoy would be capable of operating for a testing period of up to 6 months. The WEC devices are anticipated to operate for up to 12 months after they are installed. When not on station, the instrumentation buoy's anchors would be left in place and its mooring lines would be buoyed off with marker buoys. Depending on the type of anchors used, the WEC device anchors and mooring lines would also be left in place between tests. Monitoring of the instrumentation buoy would commence immediately after deployment. WEC device monitoring, also commencing immediately after deployment, would be conducted both by the WEC device developer and NNMREC. Visual inspections, maintenance operations, and safety checks of the instrumentation buoy would be performed every 4 weeks and would include retrieving data storage devices, replacing batteries, and conducting any other corrective maintenance needed. Initially, weekly visits to the instrumentation buoy would be conducted to visually inspect its exterior for signs of premature wear or excessive biofouling. NNMREC would maintain a dedicated staff person to be in charge of daily monitoring of the instrumentation buoy and WEC devices, who would respond to alarms and initiate emergency response, if needed. The staff person would monitor a prearranged set of WEC device parameters either directly through the floating power cable or through an external Internet-based interface into the instrumentation buoy's monitoring computer. The data stream would be available for local and remote monitoring, data analysis, and reporting.

The instrumentation buoy would be designed for minimal maintenance. A maintenance plan would be developed to address issues including inspections and regularly scheduled, condition-based, and corrective maintenance. Some maintenance activities could include inspecting for and cleaning of biofouling and inspecting the hull above and below water line. After each deployment, the instrumentation buoy would undergo servicing such as replacing batteries, checking all alarms and component function, and checking for excessive bio-fouling around the mooring connections.

During operation, either the instrumentation buoy or the WEC device may require removal from the mooring. A vessel of opportunity[4] would be employed to travel to the site, disconnect each mooring line, and transport the instrumentation buoy or WEC device back to Newport. The instrumentation buoy or WEC device would be repaired, serviced, or modified as needed; it would be subsequently tested, and once validated, towed back to the site for reinstallation. When removed from the project site mooring, there may be a need for dockside mooring in Newport for the WEC device. These moorings would occur at existing piers and docks in the Port of Newport and in agreement with the owner. To limit bottom disturbance, if an incoming WEC developer can use the same mooring configuration, the anchor and mooring system may be left in place temporarily between tests. If WEC device anchors are designed and installed by the device developers, they may be retrieved upon completion of the device's test. If NNMREC designs and installs WEC device moorings, configurations would be designed to safely and securely anchor a wide variety of possible WEC devices and would be left in place throughout the life of the project.

Prior to removal from or reinstallation into the project site, meteorological and oceanic conditions would be evaluated to ensure conditions are safe for operation. Removal from or reinstallation onto the mooring during winter months is not expected due to the likelihood of inclement weather and rough seas.

Both NNMREC and the WEC device developers would have local contingency response capability to respond to alarms or unexpected conditions and take corrective action, as needed. In addition to contingency response, salvage plans for the instrumentation buoy and WEC device would be in place in the event of a catastrophic event. These plans would be developed in coordination with the Oregon Parks and Recreation Department and the Oregon Department of State Lands prior to any deployment of the instrumentation buoy or a WEC device.

Although general WEC device operations and maintenance procedures are described above, a detailed set of procedures would be developed for each specific WEC device to undergo testing. These procedures would include training and qualification requirements, startup, shutdown, and contingency response procedures. Maintenance of the WEC devices would be unique to each device and the responsibility of each developer. NNMREC would be supplied with a WEC maintenance plan for review and approval before deployment of the WEC devices.

Additional details on the operation of the instrumentation buoy would be provided in a concept of operations document to be developed prior to the final design of the instrumentation buoy. Recommended procedures on startup, launch, operation, and maintenance of the instrumentation buoy would be detailed in this document. In addition, the maintenance and inspection procedures for the mooring systems would be developed and presented in an operations document.

Associated monitoring equipment would be periodically installed and recovered depending on the parameters being monitored, battery life, and data storage capacity of the devices. This includes equipment deployed directly within the 3.4-square-kilometer (1-square-nautical-mile) project site, as well as equipment deployed within the 9.3-kilometer (5-nautical-mile) monitoring area described in Section 2.3.4, Other Components.

[4] A *vessel of opportunity* refers to a general vessel that is adequate to perform the task at hand. It could be an OSU vessel, one from the local fishing fleet, or specialized commercial boat or barge. The type of vessel used is generally dictated by the services being provided and vessel availability.

2.9 Removal and Decommissioning

When the WEC device developer has completed testing, the power would be de-energized and a vessel of opportunity would be used to disconnect the umbilical cable from the instrumentation buoy and from the WEC device. With the umbilical cable removed, the WEC device would be transported back to the dock from the test site. Anchors could be retrieved by a vessel with adequate assets and load-handling capabilities or decommissioned on site. If being removed completely, the anchors and mooring lines would be retrieved by attaching a recovery line to the anchor and then winching it to the surface. This may be accomplished using a remote-operated vehicle. It may be possible to recover the anchors through the mooring lines; if this is the case, the remote-operated vehicle would not be needed. If decommissioned on site, suction-installed pile anchors could be retrieved by pumping water into the anchor chamber, creating positive pressure that forces the embedded anchor out of the sediment. Embedment anchors such as plate or pile anchors could also be cut off at the ocean floor using underwater acetylene torches. As described in Section 2.8, Operations and Maintenance, WEC device anchors may be removed between tests of individual devices or they may remain in place until the end of the Proposed Project.

As part of the Proposed Project, NNMREC would request that all WEC device developers responsibly dispose of the WEC device and all associated materials, if they are to be disposed of after the testing period. Throughout this process the WEC device developers would coordinate with NNMREC for a smooth and orderly removal.

The instrumentation buoy moorings and anchors would remain in place for the life of the Proposed Project. At the end of the Proposed Project, the instrumentation buoy anchors and mooring lines would be removed by a vessel with adequate assets and load-handling capabilities or decommissioned on site. If decommissioned on site, methods similar to those used for the WEC device described above would be used. If being removed completely, the anchors and mooring lines would be removed by attaching a recovery line to the anchor and then winching it to the surface. This may be accomplished using a remote-operated vehicle. It may be possible to recover the anchors through the mooring lines; if this is the case, the remote-operated vehicle would not be needed. Anchors and mooring lines would be disposed of in accordance with federal, state, provincial, and local environmental control regulations and at permitted facilities.

For decommissioning, all system components (with the possible exception of anchors) would be removed from the project site, including the instrumentation buoy, WEC devices, mooring lines, and subsurface floats. Disposition of equipment and material would be in accordance with a detailed decommissioning plan. The concept of operations document would include shutdown and post-operation procedures as well as removal plans for the instrumentation buoy.

If the vessel is used, it would not be decommissioned; rather it would resume a schedule of research activities to support HMSC and OSU upon conclusion of the Proposed Project.

2.10 Permits and Approvals

The permits, reviews, and approvals required for the Proposed Project are identified in Table 2-2. In all cases, the application for permits would be submitted after the final design of the buoy.

Table 2-2. Permits and Approvals

Agency	Permit/Approval
U.S. Army Corps of Engineers	Joint Permit
U.S. Army Corps of Engineers	Section 10 of the Rivers and Harbors Act
Oregon Department of State Lands	Waterway Lease
Oregon Department of Land Conservation and Development	Federal Consistency Certification (pursuant to the federal Coastal Zone Management Act)
Oregon Department of Environmental Quality	Joint Permit
U. S. Coast Guard	Private Aids to Navigation
Oregon Department of Parks and Recreation	Permit to Conduct Salvage Activities on Ocean Shore
Oregon Department of Parks and Recreation	Permit for Motor Vehicle on Ocean Shore

2.11 Measures to Minimize or Avoid Impacts

NNMREC has committed to incorporating measures in the implementation of the Proposed Project to facilitate the safe and compliant deployment of the project technology, and to minimize impacts on the marine environment.

2.11.1 Planning and Development

The following project measures address planning and development of the Proposed Project.

- WEC device developers will submit a maintenance plan to NNMREC for review and approval prior to deployment.
- A decommissioning plan that outlines responsible methods for decommissioning or removal and disposal of the instrumentation buoy and mooring system components will be developed. This will include, where applicable, recycling, reuse, or repurposing of materials.
- NNMREC will request that all WEC device developers responsibly dispose of the WEC devices and all associated materials, if they are to be disposed of after the testing period.
- Unless NNMREC would install and remove WEC device moorings themselves, NNMREC will request that all WEC device developers that would test their devices as part of the Proposed Project would submit a mooring removal and disposal plan that includes provisions for the responsible disposal, recycling, or repurposing of mooring components installed to test their device.

2.11.2 Navigation and Transportation

The following project measures address navigation and transportation of the Proposed Project.

- An automatic identification system transmitter will be part of the Proposed Project to provide navigation assistance for locating the instrumentation buoy in the unlikely event it breaks free from the mooring system.
- Marker buoys will be placed at the project site when a WEC device or instrumentation buoy has been removed (e.g., brought to Newport for maintenance).

- The instrumentation buoy will comply with applicable navigational regulations for marking, lighting, and informing boaters of the location of in-water and on-water system components.
- WEC device developers will be required to submit detailed mooring plans to NNMREC for review and approval.
- NNMREC will include the U.S. Coast Guard, the FINE committee, the Oregon State Police, and the Oregon Marine Board in determining the most appropriate navigational designations for the project site both during and between tests.
- Two weeks prior to deployment, installation, and removal of the instrumentation buoy or a WEC device, NNMREC will request that the U.S. Coast Guard publish a Local Notice to Mariners describing the Proposed Project and potential navigation exclusion zone or area to be avoided.

2.11.3 Safety and Survivability

The following project measures address the safety of the Proposed Project and its resilience and operability in the marine environment.

- Prior to testing, salvage plans for the instrumentation buoy and WEC devices will be in place in the event of a catastrophic event. These plans will be developed in coordination with the Oregon Parks and Recreation Department and the Oregon Department of State Lands. The salvage plan will include available salvage resources and the ability of those resources to respond in real-time.
- The project design will identify and address safety features for installation, operations, maintenance, modification, repair, removal, and decommissioning.
- The instrumentation buoy will be capable of surviving 50-year storm conditions at the project site.
- The instrumentation buoy will be capable of surviving a tsunami event consistent with Lincoln County guidance on tsunami planning.
- The instrumentation buoy will have the capability to remotely trigger alarm conditions for events exceeding predetermined thresholds.
- Visual inspections, maintenance operations, and safety checks for the instrumentation buoy will be performed every 4 weeks.
- Monitoring personnel will follow notification procedures in the event of instrumentation buoy system failure. In particular, the procedures will address major or cataclysmic events affecting the system that require notification of emergency or safety services, including the U.S. Coast Guard, local emergency responders, law enforcement, or emergency response agencies.
- The instrumentation buoy will contain safety features to avoid accidental shock or injury to system workers or to nearby personnel, property, or marine vessels.
- A separate set of backup batteries in the instrumentation buoy will be reserved for emergency data transmissions and bilge operation.
- Before testing, each WEC device developer will submit to NNMREC for review and approval a spill contingency and emergency response plan, which will contain measures intended to ensure a rapid response and recovery that minimizes potential environmental harm.

2.11.4 Biological Resources

The following project measures address the impacts of the Proposed Project on biological resources.

- Any WEC device that was tested in other waters prior to shipment to the project site will undergo purging of contained water, cleaning, and drying to prevent the spread of invasive species.
- Power cables will have at least single armor to reduce electromagnetic field (EMF) impacts.
- The power cable connection on the WEC devices and instrumentation buoy will be constructed of steel or other metal to discourage chewing, gnawing, or pecking and prevent electrocution by marine life.
- The connection node on the power cable will be filled with biodegradable seed-based oil.
- The instrumentation buoy will be constructed with NMFS-approved passive deterrents, such as bull rails and netting, to prevent its use as a marine mammal haulout.
- The instrumentation buoy will use only tributyltin (TBT)-free antifouling paints and coatings, and NNMREC will require that all WEC devices to be tested as part of the Proposed Project use only TBT-free antifouling paints and coatings.
- NNMREC will measure EMF transmission by project components to support physical and environmental studies. If it is determined that EMF field strength has reached the known threshold for sensitive species, NNMREC will determine the need for additional monitoring and mitigation using an adaptive management approach.
- NNMREC will deploy equipment to measure and record underwater sound generated by WEC devices under test. If recorded sound levels resulting from normal operation are higher than anticipated and above acceptable biological thresholds, NNMREC would develop and implement mitigation to reduce acoustic emissions to acceptable levels. This may include placing WEC devices in a “lock-down” mode if sound levels exceeding thresholds were discovered during a test period.
- All vessels engaged in activities to support the Proposed Project will comply with NMFS marine mammal viewing guidelines.

2.12 Research and Monitoring

A number of environmental studies to characterize the project site and, in some cases, to set a baseline for future monitoring have been conducted, are being conducted presently, or will be conducted by NNMREC and OSU. These studies are designed to increase the knowledge of the potential effects that the Proposed Project, and wave energy projects in general, may have on the environment. The studies being conducted and monitoring being planned by NNMREC are discussed below.

2.12.1 Benthic Fish and Invertebrates Study[5]

Title: Baseline Characterization of Benthic Habitat and Organisms at the Mobile Ocean Test Berth Site.

Principle Investigator: Dr. Sarah Henkel, HMSC.

Background: The objectives of this study were to characterize and describe the presence and abundance of benthic fish and invertebrate species in the area and correlate their current distributions with measureable physical factors at the site. By conducting surveys at least three times per year for 2 years prior to installation of the Proposed Project, the range of variability in species composition and abundance at the site and seasonal and inter-annual patterns can be described. These data will serve as the baseline for future monitoring studies after installation.

Methods: This study used three main sampling methods as described below.

a. Benthic infauna and non-mobile epifauna were collected using a 0.1-square meter (4-inch) box corer. Sample material obtained by the grab was used for analysis of the biological communities and sediment characteristics. Benthic samples were sieved onboard through a 1.0-millimeter screen and preserved in buffered formalin. The grain size and total organic carbon content of the sediment were determined. Vertical water column profiles have been obtained at each sampling site. Conductivity, temperature, dissolved oxygen, and depth will be obtained with a CTD with additional sensors. The box corer and CTD will be deployed using the OSU research vessel, the research vessel *Elakha*. Grabs were taken at 12 stations off Yaquina Head, Oregon. One station is located directly within the project site. The remaining eleven sampling stations are located north, south, and inshore of the project site.

b. Mobile epifauna and groundfish were collected via beam trawl using the R/V Elakha. Larger trawl surveys may be conducted using commercial fishing vessels contracted by OSU. Net-mounted sensors will record trawl distance. A CTD cast will be done prior to the start of each trawl to obtain salinity, temperature, dissolved oxygen, and depth at each station. At the conclusion of each trawl large mobile invertebrates (primarily Dungeness crabs and sea stars) were measured (sexed if appropriate) and released. Fish and small invertebrates were retained and species composition determined. Fish length, weight, and gut content were determined to assess fish condition and feeding success. Beam trawls were conducted at nine stations off Yaquina Head, Oregon. One station is located directly within the project site. The remaining eight sampling stations are located north, south, and inshore of the project site.

c. Mobile epifauna and groundfish additionally were surveyed via a video camera mounted on the beam trawl to observe species that were not captured by the trawl at all and to estimate the catch efficiency of the trawl by observed the percentage of organisms captured relative to those encountered by the trawl. During the Preliminary Sampling in May 2010, a towed camera sled on loan from the National Oceanic and Atmospheric Administration Northwest Fisheries Science Center was used.

[5] A number of studies were initiated and given titles before the Proposed Project was modified to include an instrumentation buoy or vessel rather than a MOTB. However, research and studies on the effects of the MOTB are directly applicable to the effects of the instrumentation buoy or vessel.

Schedule:

	Box Core	Trawl	Video
May 2010			✔
June 2010	✔	✔	
August 2010	✔	✔	✔
October 2010	✔	✔	
February 2011		✔	✔
April/May 2011	✔	✔	✔
June 2011	✔	✔	✔
August 2011	✔	✔	✔
October 2011	✔	✔	✔
December 2011: Final Report			

Future Monitoring Plans: After deployment of the instrumentation buoy and associated WEC devices, box-coring, trawling, and video surveys will continue at reference stations located varying distances from the project site. These reference stations will be located north and south as well as inshore of the project site and continue to be sampled seasonally to monitor for changes to sediment characteristics and species distributions after installation. The project site itself cannot be surveyed while the instrumentation buoy and WEC devices are deployed due to the presence of cables and mooring lines and the associated risk to the devices, sampling equipment, and scientists of navigating among them. However, sampling may occur once yearly between WEC device tests when the instrumentation buoy is removed for maintenance. During these times, the mooring lines and cables will be out of the water and surveys can be conducted. Furthermore, if species of particular interest or concern are identified during the baseline studies prior to deployment, methods for targeted monitoring of those organisms may be developed.

2.12.2 Acoustic Study

Title: Baseline Characterization of Acoustics at the Mobile Ocean Test Berth Site.

Principle Investigator: Dr. Dave Mellinger and Joe Haxel, Cooperative Institute for Marine Resources Studies (CIMRS)

Background: Underwater sound will be generated during installation and operation of the instrumentation buoy and WEC devices; however, existing data is currently unavailable. OSU has begun monitoring to obtain background acoustic levels. The overall objective of the acoustic study is to obtain continuous and adaptive long-term passive measurements of ambient sound levels across a broad frequency range. This work is currently underway and not completed; however, preliminary results indicate that the ambient noise levels in and around the project site are relatively high due to breaking waves, wind, vessel traffic, marine mammals and fish.

Methods: The methods and instrumentation follow techniques pioneered by CIMRS. Bottom-mounted, trawl-protected hydrophones were strategically moored to provide the best spatial coverage of the proposed development area. These autonomous underwater hydrophones record continuously. The first acoustic background monitoring mooring was deployed in the northwest corner of the project site. That mooring was turned around and data was retrieved after 6 months. A second listening mooring was deployed in the fall of 2010, southeast of the project site and

recovered in December 2010. The final mooring was retrieved in April 2011 and data analysis is underway.

Schedule:

March 20, 2010 - First (NW) acoustic mooring deployed
October 13, 2010 – Data from first (NW) acoustic mooring retrieved
October 2010 – Re-deployment of NW mooring and deployment of SE (higher freq) mooring
December 2010 – Retrieval of SE (higher frequency) mooring
April 2011 – Retrieval of NW acoustic mooring

Future Monitoring Plans: The primary sound sources for the Proposed Project will include installing anchors, anchor cables, and underwater power cables from the WEC devices to the instrumentation buoy, the predominant source of sound during project installation of the instrumentation buoy and WEC devices will originate from the propellers of support vessels involved in transport and placement. Acoustic levels will be collected during various periods during WEC device testing to represent installation and operation conditions. The methods will be similar to those used in the background characterization study discussed above.

2.12.3 Electromagnetic Field Study

Title: EMF Monitoring.

Principle Investigator: Dr. Adam Schultz, College of Oceanic and Atmospheric Science, OSU, Dr. Annette von Jouanne, Electrical Engineering and Computer Science Department, OSU.

Background: The Proposed Project will produce EMF that may have an effect on marine life. However, because there is a lack of scientific knowledge about EMF and its effects, measurements will be conducted as part of the Proposed Project to determine the level of EMF transmissions. Currently, measurement of EMF in the ocean environment has not been perfected and monitoring devices are under development and being testing. OSU developed near-field monitoring equipment that was successfully deployed under its 2008 L-10 wave buoy test. High dynamic range EMF monitoring equipment that can also detect more subtle EMFs at greater distances from the near-cable environment is also under development by OSU in collaboration with others. This has been tested in 2010 in Yaquina Bay, Oregon, detecting the EMFs from a transmitted signal imposed on a buried submarine pipeline.

Methods: OSU will continue to develop and test methods to conduct near-field and far-field EMF monitoring and apply these methods at the Proposed Project during testing intervals. This will consist of calibrating near-field monitoring equipment developed by OSU and deploying it in association with the underwater power cable. In addition, far-field capable equipment will be deployed to better understand the propagation of EMF. Measurements will be taken on the first deployment and a research paper will be generated to disseminate the results. EMF monitoring of future tests will be conducted if deemed appropriate based on the first deployment results by NMFS, USFW, and the Oregon Department of Fish and Wildlife.

2.13 Interdependent and Interrelated Actions

An interrelated action is part of the proposed action and depends on the proposed action for its justification. The interrelated action is *associated with* the proposed action. An interdependent

action has no independent utility apart from the action under consultation and exists *because of* the proposed action.

The instrumentation buoy or vessel and WEC devices would not be connected to land by any electrical cable. Testing of any WEC devices at this facility would not constitute a requirement for subsequent commercial deployment of such a device. No other wave energy projects are related to the proposed action. No interdependent or interrelated actions have been identified.

Chapter 3
Description of the Action Area

The *action area* (Figure 3-1) includes all areas to be affected directly or indirectly by the federal action and not merely the immediate area involved in the action (50 Code of Federal Regulations [CFR] §402-02). The action area should be determined based on consideration of all direct and indirect effects of the proposed action (50 CFR 402.02 and 402.14(h) (2)). As described in Chapter 6, Analysis of Effects, the potential effects of the proposed action include site-specific effects, effects that may alter nearby shorelines, effects that may introduce contaminants to the water column, and effects related to EMFs and underwater sounds that may be transmitted within the water column. The rationale for demarcation of the action area is as follows:

- Because of site-specific effects, the action area must include the 3.4-square-kilometer (1-square-nautical-mile) project site.
- An extraordinarily severe storm could result in mooring failure, driving an instrumentation buoy or WEC device upon the shoreline. Severe storms in the region come from the southwest, so the action area includes shorelines northeast of the project site.
- Contaminants could be spilled during facility deployment or operations. For WEC devices, the volumes would be small, not exceeding 379 liters (100 gallons) in the worst case. If effects could occur at dilutions of up to 1 million: 1, then the mixing zone for potential effects could extend up to 57 meters (187 feet) from the spill location (a half-sphere of radius 57 meters [187 feet] has a volume of 379 million liters [100 million gallons]). For the instrumentation buoy, the volume of contaminants would not exceed 908 liters (240 gallons), which would only occur in an unlikely worst-case scenario in which all three baffled tanks are ruptured simultaneously, as is the hull of the buoy. The spill location could be anywhere from the Newport harbor, where the instrumentation buoy and WEC devices could be launched (if towed to the site), to the project site where they would be deployed.
- The potential radius of effect for EMFs is detailed in Chapter 6, Analysis of Effects of this BA. The radius is small, less than 11 meters (35 feet) around project components, and does not exceed the size of the project site.
- The area of potential acoustic effects is detailed in Chapter 6, Analysis of Effects, and extends up to 500 meters (1,640 feet) from any location where motor vessels used in project component deployment, maintenance, or recovery could be used. Generally this would include the project site or on a course between the project site and docks at Newport.

The area of potential monitoring with ancillary equipment in order to collect reference samples for comparative analyses could include areas 9.3 kilometers (5 nautical miles) north, south, or west of the project site, and east of the project site up to the shorelines. There would be some localized and temporary impacts from vessel traffic when ancillary equipment is being placed and retrieved. The equipment itself would be placed using small temporary anchors and line, and in some cases, the equipment would simply sit on the ocean bottom. Impacts in this area from ancillary monitoring equipment are generally anticipated to be minor and discountable.

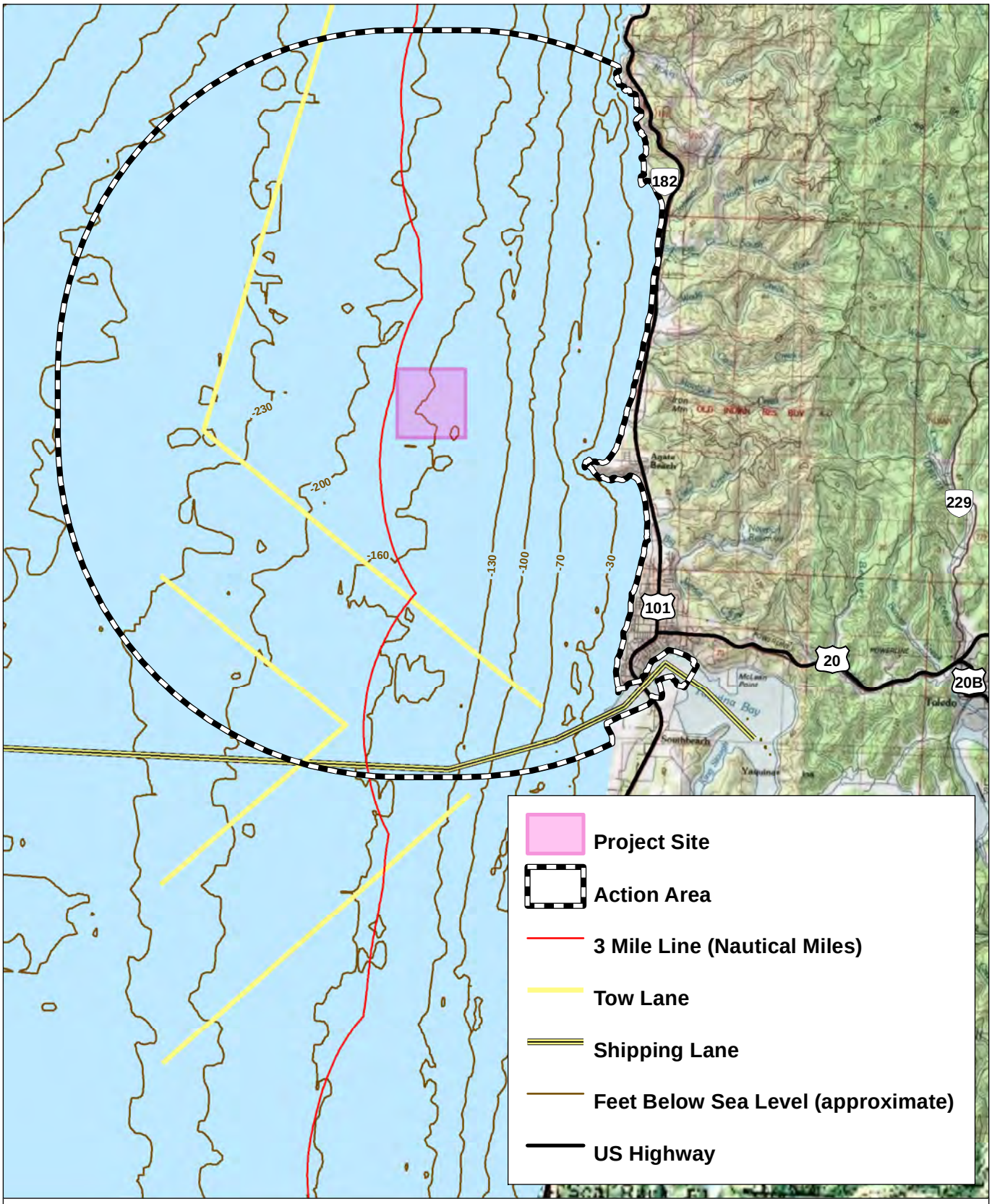

Source: National Geographic Society TOPO, courtesy of ESRI

Kilometers 0 2 4

Nautical Miles 0 2 4

Figure 3-1
Project Action Area

Chapter 4
Description of the Species that May Be Affected

Listed species addressed in this document, their listing status, the status of designated critical habitat, and relevant *Federal Register* (FR) citations are presented in Table 1-1.

4.1 Marbled Murrelet

The Washington, Oregon, and California population of the marbled murrelet (*Brachyramphus marmoratus*) was listed as threatened in 1992 (57 FR 45328). A recovery plan was published in 1997 (U.S. Fish and Wildlife Service 1997) and critical habitat was designated in 1996 (61 FR 26256). Revisions of critical habitat designations have been proposed (71 FR 53837, 73 FR 44678) and are pending. Critical habitat for the marbled murrelet does not include marine waters.

The marbled murrelet is a small, fast-flying, long-lived seabird of the family Alcidae distributed along the Pacific coast from Alaska to southern California (Nelson et al. 2006). The majority of the population resides in British Columbia and Alaska, but low numbers of these seabirds are found in Washington, Oregon, and California (Huff et al. 2006; Piatt et al. 2007). Throughout most of its range, especially south of Alaska, the marbled murrelet nests in inland areas of old-growth forests as far as 80 kilometers (50 miles) inland from the coast (Ripple et al. 2003). Such forest stands contain suitable nesting platforms, typically large moss-covered limbs, deformed branches, or other vegetative clumps greater than 12 meters (39 feet) above ground level (Nelson 1997). Ripple et al. (2003) found nesting sites in Douglas County extending miles inland beyond the Umpqua River. Murrelets spend most of their time in nearshore marine waters, foraging, loafing, molting, preening, and exhibiting courtship behavior (McShane et al. 2007). In the southern portion of their range, they do not migrate long distances, generally remaining near nesting areas (Huff et al. 2006; McShane et al. 2007).

Courtship behavior occurs at sea during early spring, or even winter months, followed by the laying of a single egg from March to as late as July (Huff et al. 2006). Chicks hatch after a 30-day incubation period and remain at the nest for 27 to 40 days while both parents participate in daily feeding efforts for the chick. When the chicks fledge, they are thought to fly directly from the nest to the sea where they receive no further parental care.

Marbled murrelets primarily forage within 1 to 2 kilometers (0.6 to 1.2 miles) from shore (U.S. Fish and Wildlife Service 1997). Strong (1995) found that murrelet sightings off the Oregon coast declined at distances of more than 0.8 kilometer (0.5 mile) offshore. Individuals typically feed on small fish such as surf smelt and sand lance, and on invertebrates (Strong 1995; U.S. Fish and Wildlife Service 1997). Piatt et al. (2007) described them as “wing-propelled pursuit divers.” Diving depth appears to vary and may depend on where the prey species is located (McShane et al. 2007). Although murrelets are likely capable of dives up to 47 meters (154 feet) deep (Mathews and Burger 1998), captures in gill net sets have demonstrated a maximal depth of 27 meters (89 feet) with most caught between 3 and 5 meters (10 and 16 feet) of the surface (Carter and Erickson 1988). While food availability is an important contributor to sustaining murrelet populations, no distinct foraging zones have been identified. Researchers found that these seabirds would forage near shore in

British Columbia during the day and move several kilometers offshore at night (Sustainable Ecosystems Institute 2007).

Strong (2003) reported declines in numbers of marbled murrelets in Oregon in the 1990s, but there are currently insufficient data to evaluate more recent marble murrelet population trends in the Washington, Oregon, and California populations (Miller et al. 2006; McShane et al. 2007). Statistically significant declines have been identified in Alaska and British Columbia (Piatt et al. 2007) and are suspected to occur throughout the southern species' range as well (McShane et al. 2007). Huff et al. (2006) estimated the current Washington, Oregon, and California population as consisting of 22,000 birds. Of these, an estimated 5,100 were along the Oregon coast (Miller et al. 2006), with a density of 14.08 ± 2.49 murrelets per square mile in Conservation Zone 3, Stratum 2 (the area within which the action area is located). Based on surveys conducted along the Oregon coast in 1992 and 1993 (Strong et al. 1995), marbled murrelets were abundant along the central Oregon coast from Newport to Coos Bay but variable in numbers south of Coos Bay. The highest density of birds occurs in a narrow band close to shore (less than 0.5 kilometer [0.3 mile]), decreasing dramatically at greater than 1 kilometer (0.6 mile) from shore.

There are few data on marbled murrelet population densities in Oregon outside the breeding season. Following the grounding of the New Carissa and subsequent oil spill near Coos Bay in early February 1999, a series of boat-based transect surveys of murrelets and other seabirds were conducted on February 14th and 15th, up to 25 kilometers (16 miles) south and 80 kilometers (50 miles) north of the wreck (Strong 2000). Transect lines were run parallel to the coast at distances from 500 to 2,000 meters (1,640 to 6,562 feet) from the shore. The mean density of marbled murrelets during these surveys (0.48 bird per square kilometer) was 0.3% to 3% of densities observed during breeding season surveys (Strong 2000). The low densities observed, however, may have resulted from effects of the oil spill and may not reflect typical winter densities in the area.

Historically, marbled murrelet population declines have been attributed to the loss and degradation of nesting habitat. Adult mortality related to gill netting has been severe in some areas, though it is not known to have occurred in Oregon (U.S. Fish and Wildlife Service 1997). Continuing threats to recovery primarily include disturbance to nesting areas which affect nesting success, nest predation, and the lack of increased nesting habitat. Additional threats include commercial and recreational fishing, ocean pollution, oil spills, changes in forage species distribution and abundance, and ocean conditions (U.S. Fish and Wildlife Service 1997; McShane et al. 2007, Sustainable Ecosystems Institute 2007). Although collisions with transmission lines and vehicles have been reported for the species, no cases of murrelets colliding with structures at sea have been documented (McShane et al. 2007).

Marbled murrelet foraging occurs throughout nearshore marine waters, but no designated critical habitat occurs within the action area, nor is any currently proposed within the action area (71 FR 52828). Proposed revisions to critical habitat include removal of areas within Douglas County that are greater than 56 kilometers (35 miles) inland from the coast (73 FR 44678).

4.2 Western Snowy Plover

The Pacific coast population of the western snowy plover (*Charadrius alexandrinus nivosus*) was first listed as threatened under the ESA in 1993 (58 FR 12664). Petitions to delist the western snowy

plover were filed in 2002 and 2003, but the listing status was reaffirmed in 2006 following a 5-year status review (U.S. Fish and Wildlife Service 2007b). To support the recovery and enhance the conservation efforts, USFWS issued a proposed rule under section 4(d) of the ESA (71 FR 20625). A recovery plan was published in 2007 (U.S. Fish and Wildlife Service 2007c). Critical habitat for the western snowy plover has been designated in coastal counties of Washington, Oregon, and California. It was first designated in 1999 (64 FR 68507) and was updated in 2005 (70 FR 56969). Another update to the critical habitat designation is scheduled to go into effect in 2012; the designated critical habitat would not include the action area (76 FR 16046).The western snowy plover is a small shorebird and is strongly associated with beach habitat and dunes (Contreras 1998). Adults move along wave breaks of sandy beaches consuming insects, crabs, and small fish. Individual birds remain near the coastline and do not make distant seaward or inland flights (U.S. Fish and Wildlife Service 2001). Colonies of birds can remain in one location year-round, but some migrate from Oregon and Washington to overwinter in Baja, California. Migration can occur in small groups or larger flocks of up to 300 individuals (U.S. Fish and Wildlife Service 2001). Plovers nest between March and September in divots on sandy beaches.

The Oregon western snowy plover breeding population has been monitored since 1978, and the population has improved in recent years (U.S. Fish and Wildlife Service 2007c). Survey results indicate that the adult population along the Oregon coast reached a low of 30 to 35 adults in the early 1990s but has generally increased since 1999. A total of 91 adult western snowy plovers were counted during breeding season surveys in 2006 for a total estimate of 135 breeding adults (U.S. Fish and Wildlife Service 2007c). Additional monitoring efforts beyond the breeding season by Lauten et al. (2006) estimated an adult snowy plover population of 177 to 179 birds, the highest estimate recorded since their monitoring efforts were initiated in 1990. Population growth has been linked to conservation and protection efforts initiated with the federal listing of this species.

The plover's reliance on beach and dune habitat makes it increasingly susceptible to housing and industrial development. Additional threats to population recovery include expanded predator populations and introduced beachgrass (*Ammophilla* spp.) (U.S. Fish and Wildlife Service 2007c). Continued efforts to protect plover habitat may ensure full population recovery.

Considerable terrestrial habitat along the Oregon coastline is deemed critical for persistence of western snowy plover populations (70 FR 56970). There are 2,147 acres of critical habitat designated in Oregon (70 FR 56969); however, none are located in the action area. The closest designated critical habitat, Sutton-Baker Beaches, is located approximately 64 kilometers (40 miles) south of the action area. To the north, the closest designated critical habitat, Bayocean Spit, is located approximately 101 kilometers (63 miles) north of the action area.

The action area is in Recovery Unit 1, which includes coastal Washington and Oregon. There are 17 areas designated for conservation management of snowy plover on the Oregon coast; all but area OR-7 at South Beach, just south of Newport, are at least 64 kilometers (40 miles) from the action area. OR-7 is an 18-hectare site covering almost 3.2 kilometers (2 miles) of coastline extending south from the Yaquina Bay south jetty. Neither breeding nor overwintering has yet been recorded at OR-7, but the area is assessed in the recovery plan as having a management potential of four breeding birds (U.S. Fish and Wildlife Service 2007c: Appendix A).

4.3 Short-Tailed Albatross

Prior to its exploitation, the short-tailed albatross (*Phoebastria albatrus*) was possibly the most abundant of the three North Pacific albatross species. Millions of these birds were harvested by feather hunters prior to and following the turn of the 20th century, resulting in the near-extinction of the species by the mid-20th century (U.S. Fish and Wildlife Service 2008). In 2000, USFWS listed the short-tailed albatross as endangered throughout its range (65 FR 147). The species' breeding grounds are limited to Torishima Island and the Senkaku Islands, south of Japan; however, in recent years, nonbreeding individuals and pairs have been observed during breeding seasons further south on Minami-Kojima Island in the Ryukyu chain as well as on Midway Island. Birds spend most of their lives over the northern Pacific Ocean and the Bering Sea. Critical habitat has not been designated because there are few specific areas under United States jurisdiction that would meet the definition of critical habitat, and because there are few habitat-related threats (U.S. Fish and Wildlife Service 2008).

The USFWS (63 FR 58692) formerly estimated the short-tailed albatross to number about 1,000 birds. By 2008, the world population estimate had grown to about 2,400 birds (U.S. Fish and Wildlife Service 2008).

Short-tailed albatross spend most of their time at sea on foraging grounds associated with continental shelf-break areas with water depths of 200 to 1,000 meters (656 to 3,281 feet) (U.S. Fish and Wildlife Service 2008), and thus are typically encountered well offshore over waters deeper than any found in the action area. There are fewer than 10 reported observations of the species off the Oregon coast, with none closer than 32 kilometers (20 miles) offshore (Nehls 2003). Thus, short-tailed albatross are not expected to occur in the action area.

4.4 Chinook Salmon, Lower Columbia River ESU

The lower Columbia River Chinook salmon (*Oncorhynchus tshawytscha*) Evolutionarily Significant Unit (ESU) includes all naturally spawned populations of Chinook salmon from the Columbia River and its tributaries from the mouth up to and including the Hood and White Salmon rivers, plus 17 artificial propagation programs. The lower Columbia River Chinook salmon was first listed as threatened under the ESA in 1999 and this listing was reaffirmed in 2005 (70 FR 37160; June 28, 2005). Critical habitat was designated in 2005 (70 FR 352630; September 5, 2005).

Chinook salmon are the largest of the Pacific salmon; they can reach up to 147 centimeters (58 inches) in length and weigh up to 58.5 kilograms (129 pounds). They are a wide-ranging species highly prized by commercial, sport, and subsistence fishers. As with the other salmon stocks described here, the generalized life history of the lower Columbia River Chinook salmon involves incubation, hatching, and emergence in freshwater, migration to the ocean, and return to freshwater for spawning to complete the life cycle. The duration of freshwater and oceanic habitation can vary substantially, as can the timing of migration and spawning, and is related to genetic and environmental determinants and their interactions to varying degrees (Myers et al. 1998).

There are generally two spawning runs based on timing. The lower Columbia River Chinook salmon stock is dominated by fall-run spawning adults (Myers et al. 1998). Spawning adults of about 3 to 4 years of age return to the river from late August to October with the peak spawning in November.

Spring-run Chinook salmon in the lower Columbia River are typically 4 to 5 years of age and enter freshwater in March and April, holding in the river until spawning in August and September.

Lower Columbia River Chinook are primarily represented by ocean-type Chinook salmon. These salmon tend to use estuaries and coastal areas extensively for juvenile rearing, while stream-type Chinook salmon use offshore ocean habitat more extensively. In general, the younger (smaller) juveniles are at the time of emigration to the estuary, the longer they remain there (Myers et al. 1998). Out-migration behavior in ocean-type Chinook salmon juveniles is positively correlated with water flow.

Myers et al. (1998) noted that salmon tagging studies are dominated by hatchery populations, so the migratory routes of many wild stocks must be inferred from these. Tag recoveries are obtained through commercial and sport fishery samples, so the relative intensity of each fishery may bias the interpretation of the oceanic distribution of each stock. Oceanic distributions across years can be influenced by changes in fishing regulations and ocean conditions, such as during an El Niño. Based on tagging studies, lower Columbia River salmon stocks primarily use ocean habitat off the British Columbia and Washington coasts, with a small proportion of tags recovered from Alaska. Brodeur et al. (2004) conducted a study of juvenile salmonids in the California Current system from central Oregon to northern California as part of the U.S. Global Ocean Ecosystems Dynamics (GLOBEC)[6] program and found small numbers of Chinook salmon believed to have originated from the Columbia River basin. These researchers concluded that juvenile salmon were following productive ocean upwelling currents. Based on archival tag data for Chinook salmon monitored between near Oregon and California, the best indicator of Chinook salmon habitat in the coastal ocean was the temperature range between 9 and 12 degrees Celsius (°C) (Hinke et al. 2005).

Salmon declines in the lower Columbia River have been attributed to habitat degradation and loss due to extensive hydropower development projects, urbanization effects, forestry activities, agriculture, pollution, and intensive hatchery production (Myers et al. 1998). These activities continue to threaten recovery of the ESU. Chinook salmon are also managed as a harvest species as well as collected incidentally in coastal and offshore fisheries. The average total exploitation rates range from 29% to 44%, depending on run type (National Oceanic and Atmospheric Administration 2007b).

As with most salmon populations during the early and mid-1900s, Chinook salmon numbers declined drastically. In general, population abundance estimates and trends are very difficult to obtain for salmon as there are no consistent or range-wide efforts. Abundance estimates have been sporadic in years and in individual stream drainages. Based on the most recent NMFS status review for lower Columbia River Chinook salmon (Good et al. 2005), there is very little natural reproduction and the population is sustained primarily through hatchery production. One exception appears to be the Lewis River population, which has one of the few natural self-sustaining populations. Overall, Good et al. (2005) characterized the lower Columbia River Chinook salmon abundance trend from 1990 to 2000 as negative for most rivers, although preliminary indications for 2001 and 2002 numbers indicated an increase.

[6] Global Ocean Ecosystems Dynamics (GLOBEC) is a research program organized by oceanographers and fisheries scientists to address the question of how global climate change may affect the abundance and production of animals in the sea.

Designated critical habitat for lower Columbia River Chinook salmon includes many lower Columbia River drainages, such as the middle Columbia/Hood, lower Columbia/Sandy, Lewis, lower Columbia/Clatskanie, upper Cowlitz, Cowlitz, lower Columbia, Clackamas, and lower Willamette subbasins as well as the lower Columbia River migration corridor. Critical habitat does not extend out into the open ocean and does not include the action area (70 FR 52630).

4.5 Chinook Salmon, Upper Willamette River ESU

Oregon coastal waters provide rich pelagic food resources for several salmonid stocks during the ocean phase of their development. The upper Willamette River Chinook salmon uses the upper Willamette River basin. The Willamette River originates in the western Cascade Mountains and flows north to its confluence with the Columbia River, which enters the ocean approximately 274 kilometers (170 miles) north of the project site. The ocean distribution of these fish is consistent with an ocean-type life history, and these fish are tracked in considerable numbers in the Alaskan and British Columbian coastal fisheries (Myers et al. 1998). Southerly migration of this ESU has not been documented, and the ESU is presumed to not occur in the action area.

4.6 Chinook Salmon, Upper Columbia River Spring-Run ESU

The Upper Columbia River spring-run Chinook salmon ESU includes all naturally spawned populations of Chinook salmon in all river reaches accessible to Chinook salmon in the Columbia River tributaries upstream of the Rock Island Dam and downstream of Chief Joseph Dam in Washington State, excluding the Okanogan River (64 FR 14208; March 24, 1999). Six artificial propagation programs in the Upper Columbia River Basin produce spring-run Chinook salmon in the Methow and Wenatchee rivers that are considered to be part of the Upper Columbia River spring-run Chinook salmon ESU. The ESU was first listed as an endangered species on March 24, 1999. Its endangered status was reaffirmed on June 28, 2005 (70 FR 37160). The ESU Upper Columbia River spring-run Chinook salmon critical habitat was designated on September 2, 2005 (70 FR 52630).

Upper Columbia River spring-run Chinook salmon have life-history characteristics similar to spring Chinook salmon runs originating in the Snake River system. Adults begin returning from the ocean in early spring, with the run into the Columbia River peaking in mid-May. Spring Chinook salmon enter the Upper Columbia River tributaries from April through July. After migration, they hold in freshwater tributaries until spawning occurs in the late summer, peaking in mid- to late August. Juvenile spring Chinook salmon spend a year in freshwater before migrating to saltwater in the spring of their second year of life. Most Upper Columbia River spring Chinook salmon return as adults after 2 or 3 years in the ocean. Some precocious males, or jacks, return after one winter at sea. A few other males mature sexually in freshwater without migrating to the sea. However, 4- or 5-year-old fish that have spent 2 to 3 years at sea, respectively, dominate the run. Fecundity ranges from 4,200 to 5,900 eggs, depending on the age and size of the female (U.S. Fish and Wildlife Service 2007a).

Designated critical habitat includes all or portions of the following river basins: Wenatchee, Okanogan, Chewack, and the Columbia River basin in northern Washington State. Critical habitat does not extend out into the open ocean and does not include the action area (70 FR 52630).

4.7 Chinook Salmon, Snake River Spring/Summer-Run ESU

The Snake River spring/summer-run Chinook salmon ESU includes all naturally spawned populations of spring/summer-run Chinook salmon in the mainstem Snake River and the Tucannon River, Grande Ronde River, Imnaha River, and Salmon River subbasins (57 FR 23458). The ESU was listed as a threatened species on April 22, 1992, and the threatened status was reaffirmed on June 28, 2005 (70 FR 37160). Critical habitat for the Snake River spring/summer-run Chinook salmon ESU was designated on December 28, 1993, and revised on October 25, 1999 (64 FR 57399).

NMFS classified spring- and summer-run Chinook salmon returning to the major tributaries of the Snake River as an ESU. This ESU includes production areas characterized by spring- and summer-timed returns, and combinations from the two adult timing patterns. Runs classified as spring-run Chinook salmon are counted beginning in early March and ending the first week of June; runs classified as summer-run Chinook salmon return to the Columbia River from June through August. Returning fish hold in deep mainstem and tributary pools until late summer, when they emigrate up into tributary areas and spawn. In general, spring-run type Chinook salmon tend to spawn in higher-elevation reaches of major Snake River tributaries in mid- through late August, and summer-run Snake River Chinook salmon spawn approximately 1 month later than spring-run fish. Summer-run Chinook salmon tend to spawn lower in the Snake River drainages, although their spawning areas often overlap with spring-run spawners (Good et al. 2005).

Spring/summer-run Chinook salmon from the Snake River basin deposit their eggs in late summer and early fall, which incubate over the winter and hatch in late winter and early spring of the following year. Juveniles rear through the summer, overwinter, and migrate to sea in the spring of their second year (Good et al. 2005).

Direct estimates of annual runs of historical spring/summer-run Chinook salmon to the Snake River are not available. Returns to Snake River tributaries have declined since the late 1960s, and increases in hatchery production over subsequent years have masked a continued decline in native fish (Good et al. 2005).

Designated critical habitat includes areas of eastern Washington and Oregon and central Idaho. Critical habitat does not extend out into the open ocean and does not include the action area (64 FR 57399).

4.8 Chinook Salmon, Snake River Fall-Run ESU

The Snake River fall-run Chinook salmon ESU includes all naturally spawned populations of fall-run Chinook salmon in the mainstem Snake River below Hells Canyon Dam, and in the Tucannon River, Grande Ronde River, Imnaha River, Salmon River, and Clearwater River subbasins (57 FR 14653, 57 FR 23458). This ESU was listed as a threatened species on April 22, 1992, and its ESA threatened status was reaffirmed on June 28, 2005 (70 FR 37160). Critical habitat for the Snake River fall-run Chinook salmon ESU was designated on December 28, 1993 (58 FR 68543).

Snake River fall-run Chinook salmon enter the Columbia River in July and August. Spawning occurs from October through early December. Juveniles emerge from the gravels in March and April of the following year. Snake River fall-run Chinook salmon exhibit an ocean-type life history pattern, with

juveniles migrating downstream from their natal spawning and rearing areas from June through early fall (Good et al. 2005).

Snake River fall-run Chinook salmon have been steadily declining in abundance since the early 1970s. Declines have been attributed to a loss of primary spawning and rearing areas as a result of hydropower projects, decreases in naturally produced spawners, and harvest impacts by ocean and in-river fisheries. According the latest status update (Good et al. 2005), the 1997–2001 mean return of natural-origin Chinook salmon exceeded 3,700. The increase was largely driven by the 2001 return, estimated to have exceeded 17,000 naturally produced spring-run Chinook salmon.

Snake River spring/summer-run Chinook salmon must migrate past a series of mainstem Snake River and Columbia River hydroelectric dams to and from the ocean. These hydropower projects have resulted in major disruption of migration corridors (Good et al 2005).

Designated critical habitat includes many Snake River drainages in southern Washington, northeast Oregon, and central Idaho. Critical habitat includes all or part of the following basins: Tucannon River, Grande Ronde River, Imnaha River, Clearwater River, and Salmon River. Critical habitat does not extend into the open ocean and does not include the action area (58 FR 68543).

4.9 Coho Salmon, Southern Oregon/Northern California Coast ESU

The Southern Oregon/Northern California coast coho salmon (*Oncorhynchus kisutch*) ESU consists of all naturally spawned populations of coho salmon from Cape Blanco, Oregon (201 kilometers [125 miles] south of the action area) south to Punta Gorda, California, as well as from three hatcheries (70 FR 37160). This ESU was listed as a threatened species in 1997 (62 FR 24588), and this status was reaffirmed in 2005 (70 FR 37160). Critical habitat for the Southern Oregon/Northern California coast coho salmon ESU was designated in 1999 (64 FR 24049) and a draft recovery plan was issued in December 2007 (National Oceanic and Atmospheric Administration 2007a; National Marine Fisheries Service 2007a).

Coho salmon are an anadromous species, with spawning adults typically migrating up natal rivers late summer to fall, spawning in midwinter, and then dying. Weitkamp et al. (1995) noted a trend of decreasing size for spawning adult coho salmon with potential implications for reduced fecundity and spawning success. The egg and larval stage can last 1.5 to 4 months and juveniles may rear in their natal rivers for up to 15 months. The specific timing for migration, spawning, and larval emergence varies somewhat by river, depending on site-specific conditions. Following rearing, coho salmon out-migrate as smolts in the spring, typically at a size of 90 to 115 millimeters. Smolt size and out-migration timing varies interannually and within the distribution range (Weitkamp et al. 1995).

Juvenile coho salmon rearing in rivers feed on aquatic insects, zooplankton, and small fish (Pacific States Marine Fisheries Commission 1996b; Schabetsberger et al. 2003; Olegario 2007). Schabetsberger et al. (2003) found that juvenile coho salmon were diurnal predators selectively preying on large and heavily pigmented prey items. As young juveniles, salmon pass through the nearshore areas, where they grow rapidly and move into the open ocean as pelagic feeders. Juvenile coho salmon in the nearshore environment initially feed on marine invertebrates, but their diet changes mainly to fish and some marine invertebrates as they grow. Prey species for coho salmon in

the marine environment include herring, sardine, anchovy, sand lance, squid, smelt, groundfish, and crab (Pacific Fishery Management Council 2000; Alaska Department of Fish and Game 2007). Adult coho salmon can reach up to 98 centimeters (38.5 inches) in length and weigh up to 14 kilograms (31 pounds), although they usually achieve adult weights between 2.7 and 5.4 kilograms (6 and 12 pounds) (Pacific States Marine Fisheries Commission 1996b).

Coho salmon generally remain in ocean waters over two growing seasons before returning to natal rivers to spawn (Weitkamp et al. 1995; Good et al. 2005). Some variable percentage of adult males, or jacks, return after only one season at sea. The ocean migration patterns for this species are not well documented (Pearcy 1992; Weitkamp and Neely 2002) and may overlap the project action area. Ocean migration studies using coded-wire tags indicated that juvenile coho salmon released from hatchery facilities located south of Cape Blanco were recovered as returning adults primarily in California with some recoveries in Oregon (Weitkamp et al. 1995). The tag study only indicated ocean migration patterns during the last few months of a 1.5-year-long migration. The range of migration during the early stages of migration is not well documented.

Brodeur et al. (2004) conducted a study of juvenile salmonids in the California Current system from central Oregon to northern California as part of the GLOBEC program[7]. Samples were collected in June and August between 1.6 and 55.5 kilometers (1 and 30 nautical miles) from shore. Transects were located from just south of the California-Oregon border, north to Newport, Oregon at approximately the same latitude as the action area. Salmonids (coho salmon, Chinook salmon, and steelhead) comprised only 1.9% of the catch in June and 3.1% in August. Coho salmon were collected in low numbers overall, but were more abundant north of Cape Blanco. Both coho and Chinook salmon were found in areas with sea surface temperatures of less than 12°C; i.e., in areas near shore with active upwelling of cold bottom waters. Genetic analyses indicated that coho salmon were of mixed stock origin, with about 40% derived from rivers south of Cape Blanco, 47% from Oregon coastal rivers north of Cape Blanco, and 13% from the Columbia River basin. Eight tagged fish originated from Rogue, Umpqua, and Columbia River hatcheries. Weitkamp and Neely (2002) also found that coho salmon were widely dispersed in the coastal ocean based on analysis of 1.77 million tagged recoveries from Alaska to California.

Based on these data, Southern Oregon/Northern California coast coho salmon ESU are likely to occur in the action area. They are primarily found in upwelling zones which depend on temperature conditions, and these areas move around with variable ocean conditions (Brodeur et al. 2004). There are no known data for salmon collected in the action area itself. Based on the data of Brodeur et al. (2004), juvenile coho salmon could occur in the action area from June to August or later. Adults would likely appear in the action area shortly before their migration into Yaquina Bay, in late summer to fall.

The historical abundance of Southern Oregon/Northern California coast coho salmon ESU salmon is estimated at 150,000 (National Marine Fisheries Service 2007a), ranging up to 500,000 adults (62 FR 24588; Good et al. 2005). Coho salmon populations within this ESU have declined significantly over the past decades with estimates of approximately 10,000 naturally produced adults. The overall ESU population status trend remains low since the initial status review (64 FR 24049).

[7] The Global Ocean Ecosystem (GLOBEC) Program, officially ran from 1999-2009 with the goal of advancing understanding of the structure and functioning of the global ocean ecosystem, its major subsystems, and its response to physical forcing so that a capability could be developed to forecast the responses of the marine ecosystem to global change.

The list of threats and impacts for the Southern Oregon/Northern California coast coho salmon ESU is long but most relate to habitat degradation or elimination within freshwater and estuarine distribution range (64 FR 24049). A technical recovery team was formed in 2002 and has been working to develop the technical information needed to prepare the species recovery plan. A draft recovery was issued in December 2007 (National Marine Fisheries Service 2007e).

No critical habitat for the Southern Oregon/Northern California coast coho salmon ESU occurs in the action area. Critical habitat for this ESU is designated to include all river reaches accessible to listed coho salmon between the Elk River in Oregon (approximately 201 kilometers [125 miles] south of the action area) and the Mattole River in California, inclusive (64 FR 24049). Critical habitat consists of the water, substrate, and adjacent riparian zone of estuarine and riverine reaches (including off-channel habitats). Accessible reaches are those within the historical range of the ESU that can still be occupied by any life stage of coho salmon. Inaccessible reaches include areas above longstanding, naturally impassable barriers (i.e., natural waterfalls in existence for at least several hundred years) and above specific dams outside of the action area (64 FR 24049).

4.10 Coho Salmon, Oregon Coast ESU

The Oregon coast coho salmon ESU includes naturally spawning populations in Oregon coastal streams from north of Cape Blanco to south of the Columbia River (Good et al. 2005). Since 1995, a series of status reviews and comprehensive evaluations have been conducted for this ESU. The Oregon coast coho salmon ESU was listed as threatened under the ESA in 1998 (63 FR 42587) but the decision was challenged in court and NMFS subsequently conducted an updated status review. In June 2004, NMFS proposed listing the ESU as threatened under the ESA. After consideration of the best available scientific information, which included the state of Oregon's comprehensive Oregon Coastal Coho Assessment, NMFS concluded that the Oregon coast coho salmon ESU did not warrant listing as an endangered or threatened species and withdrew their proposed listing as well as proposed critical habitat (71 FR 3033). However, in response to a lawsuit filed against the decision, the United States District Court ruled on October 9, 2007, that the status be reviewed and a new listing decision be finalized (Environment News Service 2007). After further review, NMFS listed the Oregon coast coho salmon ESU as threatened and designated critical habitat (73 FR 7816).

The Oregon coast coho salmon ESU inhabits 11 major river systems and three coastal lakes located both north and south of the action area. These populations (Weitkamp et al. 1995) have been the focus of a considerable conservation effort by the State of Oregon, local and private entities, and federal management partners. See the discussion under Southern Oregon/Northern California coast coho salmon for information on general life history and potential distribution within the action area.

In 1997, extensive survey data were available for coho salmon in the Oregon coast region. Overall, spawning escapements have declined substantially during the 20th century and have been at less than 5% of the abundance of the early 1900s (Good et al. 2005). Naturally produced Oregon coast coho salmon have declined to historically low levels since the 1950s with 80,000 estimated in 1996 (Good et al. 2005). Total recent average spawner abundance for this ESU is estimated at about 140,600, which is up from the 5-year geometric mean of 52,000 in the 1997 update. More recent data suggest an increase in marine survival rates as average spawner abundance increased to 140,600 (Good et al. 2005). However, the authors cautioned that "short-term increases in abundance driven by marine survival cycles can mask long-term downward trends resulting from freshwater habitat degradation… or longer-term trends in marine survival that may be a

consequence of global climate change. …The current upswing in marine survival is a good thing for OCC but will only provide a temporary respite unless other downward trends are reversed."

The primary historic threats or impacts on Oregon coast coho salmon were attributed to habitat loss and degradation, water diversions, harvest, hatchery production, and poor ocean conditions (71 FR 3045; January 19, 2006). NMFS has concluded that habitat protection and improvement activities and other regulatory programs have reduced the severity of most of these threats and on this basis concluded that listing of this species under the ESA was not warranted. That decision is now under further review.

Critical habitat for Oregon coast coho salmon includes riverine and estuarine areas within 80 occupied watersheds in 13 associated subbasins. Critical habitat includes the waters of Yaquina Bay in the action area, but does not extend out into offshore waters (73 FR 7816). Habitat requirements in estuarine and coastal marine waters (there are no fresh waters in the action area) include the following (73 FR 7833):

- Estuarine areas free of obstruction with water quality, water quantity, and salinity conditions supporting juvenile and adult physiological transitions between fresh- and saltwater; natural cover such as submerged and overhanging large wood, aquatic vegetation, large rocks and boulders, and side channels; and juvenile and adult forage, including aquatic invertebrates and fishes, supporting growth and maturation.
- Nearshore marine areas free of obstruction with water quality and quantity conditions and forage, including aquatic invertebrates and fishes, supporting growth and maturation; and natural cover such as submerged and overhanging large wood, aquatic vegetation, large rocks and boulders, and side channels.
- Offshore marine areas with water quality conditions and forage, including aquatic invertebrates and fishes, supporting growth and maturation.

4.11 Coho Salmon, Lower Columbia River ESU

The Lower Columbia River coho salmon ESU includes all naturally spawned populations of coho salmon from the Columbia River and its tributaries from the mouth up to and including the Big White Salmon and Hood Rivers, including the Willamette River to Willamette Falls, Oregon, plus 25 artificial propagation programs. The Lower Columbia River coho salmon ESU was listed as threatened under the ESA in 2005 (70 FR 37160). Critical habitat has not been designated for this ESU.

The general life history pattern for Lower Columbia River coho salmon ESU follows that of other west coast salmon species as described above. The ocean migration patterns for coho salmon are not well documented (Pearcy 1992). Based on extensive tagging studies, they are widely dispersed and may occur in the action area (Weitkamp and Neely 2002).

Salmon declines in the lower Columbia River have been attributed to habitat degradation and loss due to extensive hydropower development projects, urbanization, logging, and agriculture; these activities continued to threaten recovery of the ESU. Coho salmon population levels declined drastically in the 1980s and reached near-zero spawner counts in the 1990s (Suring et al. 2006). Based on the most recent NMFS status review (Good et al. 2005), Lower Columbia River coho salmon have very little natural reproduction and the population is sustained primarily through

hatchery reproduction. Possible exceptions include the Clackamas and Sandy River subbasins. Lower Columbia River coho salmon are caught in ocean and Columbia River fisheries and recent exploitation rates were limited to 15% to 20% (National Oceanic and Atmospheric Administration 2007b).

The Oregon Department of Fish and Wildlife conducted an extensive assessment of abundance, distribution, spawn timing, and hatchery-to-wild ratios of spawning adult coho salmon in the Oregon portion of the Lower Columbia River coho salmon ESU population (Suring et al. 2006). The assessment showed that spawn timing appeared to be related to stream-flow patterns. Average spawner counts for the survey years (2002–2004) and escapement rates in this area were higher than recent decades but still significantly lower than in the pre-1970s, and runs were not as strong as along the Oregon coast.

4.12 Green Sturgeon

Based on a preliminary genetic analysis of the North American green sturgeon (*Acipenser medirostris*) and its suspected fidelity to natal rivers, NMFS (68 FR 4433) designated two distinct population segments (DPS) for the species.

4.12.1 Northern DPS

The northern DPS consists of green sturgeon populations originating from coastal watersheds northward of, and including, the Eel River in northern California. NMFS determined that the northern DPS did not warrant listing as an endangered or threatened species. However, concerns regarding lack of data on population structure and status resulted in the northern DPS being designated a species of concern (68 FR 4433, reaffirmed in 71 FR 17757).

4.12.2 Southern DPS

The southern DPS consists of green sturgeon populations originating from coastal and Central Valley watersheds south of the Eel River in California. On April 7, 2006 (71 FR 17757), NMFS issued a final rule listing the southern DPS as threatened under the ESA based on the following information: majority of spawning adults occur in one river system making them susceptible to extirpation due to catastrophic events, continued severe threats, evidence of lost spawning habitat, and data showing a negative trend in juvenile abundance. Take prohibitions were subsequently adopted (75 FR 30714). Critical habitat for the green sturgeon southern DPS was designated on October 9, 2009 (74 FR 52300), and includes the action area.

The green sturgeon is a long-lived anadromous fish with a wide distribution along the Pacific coast from Ensenada, Mexico to southeast Alaska, though the population is mainly concentrated between northern California and Willapa Bay, Washington (Pacific States Marine Fisheries Commission 1996a). Green sturgeon reach maturity at 15 to 19 years of age (Van Eenennaam et al. 2006) and spawn every 2 to 5 years (Adams et al. 2002; Erickson and Webb 2007), attaining a maximum age of 60 to 70 years (National Marine Fisheries Service 2007c). As with other sturgeons, the green sturgeon is a large fish, at maturity ranging from 139 to 223 centimeters in length and reaching weights up to 159 kilograms (351 pounds) (National Marine Fisheries Service 2007d).

Juvenile green sturgeon remain in natal rivers for 1 to 4 years and then migrate out into the ocean where they spend most of their lives in coastal areas (National Marine Fisheries Service 2007c). The Sacramento River is the only stream where spawning by southern DPS green sturgeon has been confirmed and where all life stages of the southern DPS are supported (National Marine Fisheries Service 2008c). Spawning in the mainstem of the Sacramento River has been documented over 386 kilometers (240 miles) upstream, both downstream and upstream of Red Bluff Diversion Dam (Brown 2007). Adult green sturgeon are found in the Sacramento River when water temperatures are between 8 and 14°C (Moyle 2002).

There is limited information on green sturgeon movements, behavior, habitat preferences, or requirements out in the open ocean. Based on information from some genetic analyses, limited tagging studies, and commercial fishing reports, green sturgeon are believed to make extensive movements from natal rivers, generally in a northerly direction (National Marine Fisheries Service 2005a; Adams et al. 2002; Erickson and Hightower 2007; Israel and May 2007; Lindley et al. 2008). Based on studies in the Rogue River, spawning adult green sturgeon enter the river during spring months and migrate upstream above tidal influence to spawn. They remain in the river for up to 6 months, and then migrate back out to sea in November and December when water temperature drops below 10°C and water flows increase (Erickson et al. 2002; Erickson and Webb 2007). Data collected from seven out-migrating green sturgeon tagged with pop-off archival tags in the Rogue River indicate that green sturgeon are more active at night, generally inhabiting depths of 40 to 70 meters (131 to 230 feet), and occasionally making rapid ascents to the surface (Erickson and Hightower 2007).

Lindley et al. (2008) found that tagged green sturgeon made extensive seasonal spring and fall migrations along the continental shelf and suspected the occurrence of an important overwintering area between Cape Spenser, Alaska and Vancouver Island. Peak migration rates exceeded 50 kilometers (31 miles) per day during the springtime southward migration. Annual survival of these tagged green sturgeon was estimated at 83% in 2004 (Lindley et al. 2008).

Available information from offshore commercial trawling efforts indicates green sturgeon remain within the 110-meter (361-foot) depth contour line (Erickson and Hightower 2007, National Marine Fisheries Service 2005a). Additional commercial and scientific collection efforts indicate green sturgeon of mixed stock often concentrate in bays and estuaries all along the Pacific coast, but especially within the Columbia Bay, Willapa Bay, and Gray's Harbor, with highest numbers occurring in August. However, stomach analyses conducted within these areas indicate the green sturgeon are not feeding (in contrast to concurrently collected white sturgeon) and these estuaries are not associated with spawning rivers (Adams et al. 2002).

Information on green sturgeon prey species is limited to some data within the Sacramento Bay. Adult green sturgeon are benthic feeders and consume mollusks, shrimp, amphipods, and some small fish (National Marine Fisheries Service 2005a). It is assumed they continue to be benthic feeders out in oceanic habitat.

There are few data on the population status of the southern DPS green sturgeon. Some adults and juvenile green sturgeon persist in the Sacramento River; thus, NMFS concluded the population was not in eminent risk of extinction. However, threats to the population continue (71 FR 17757). The primary threat is attributed to the decrease in spawning habitat to a single population in the upper Sacramento River. Migration barriers and water diversion projects have reduced or eliminated what was thought to have been historical spawning habitat in the nearby Feather and San Joaquin River

systems. Water quality degradation due to thermal and potential contaminants in the Sacramento River system is also considered a factor in the population decline and is a continued threat to the southern DPS. While there is no focused fishery for green sturgeon, incidental catches and mortality from commercial and recreational fishing industry, in part targeting white sturgeon, was also listed as a threat (71 FR 17757; Erickson and Webb 2007). Invasive species, such as the striped bass, pose a potential risk as they are known to prey on juvenile green sturgeon.

Critical habitat for the green sturgeon southern DPS was designated by NMFS on October 9, 2009 (74 FR 52300). Critical habitat includes the coastal marine waters 110 meters (361 feet) deep from Monterey Bay, California north to Cape Flattery, Washington, including the Strait of Juan de Fuca, Washington, to its United States boundary; and certain other areas, specifically including Yaquina Bay (74 FR 52300). The designated critical habitat includes the action area. In their proposal for critical habitat designation, NMFS identified PCEs for green sturgeon critical habitat in freshwater, estuarine, and nearshore marine habitats. The PCEs for freshwater habitat are irrelevant as no freshwater habitat occurs in the action area. The PCEs for estuarine habitat and nearshore marine habitat are identified below.

For estuarine habitat:

- Food resources that "primarily consist of benthic invertebrates and fishes, including crangonid shrimp, burrowing thalassinidean shrimp (particularly the burrowing ghost shrimp), amphipods, isopods, clams, annelid worms, crabs, sand lances, and anchovies" (73 FR 52089).
- Water flow (only applicable to the Sacramento River system).
- Water quality "including temperature, salinity, oxygen content, and other chemical characteristics, necessary for normal behavior, growth, and viability of all life stages." (73 FR 52089).
- Migratory corridor, "[a] migratory pathway necessary for the safe and timely passage of Southern DPS fish within estuarine habitats and between estuarine and riverine or marine habitats." (73 FR 52089).
- Water depth, "[a] diversity of depths necessary for shelter, foraging, and migration of juvenile, subadult, and adult life stages." (73 FR 52089).
- Sediment quality "necessary for normal behavior, growth, and viability of all life stages" (73 FR 52090).

For coastal marine habitat:

- Migratory corridor, "[a] migratory pathway necessary for the safe and timely passage of Southern DPS fish within marine and between estuarine and marine habitats" (73 FR 52090).
- Water quality "with adequate dissolved oxygen levels and acceptably low levels of contaminants" (73 FR 52090).
- Food resources, including "[a]bundant prey items for subadults and adults, which may include benthic invertebrates and fishes" (73 FR 52089).

4.13 Eulachon, Southern DPS

The southern DPS of eulachon (*Thaleichthys pacificus*) was listed as threatened on March 18, 2010 (75 FR 13012). Critical habitat for the eulachon southern DPS was designated on October 20, 2011 (76 FR 65324), but does not occur in the action area. The closest area of proposed critical habitat is in lower Tenmile Creek, 121 kilometers [75 miles] south of the action area.

Most eulachon in the southern DPS originate in the Columbia River Basin. The principal spawning runs occur in the mainstem river from the upper estuary (river mile 25) to Bonneville Dam (river mile 146), with a major secondary run in the Cowlitz River and minor or sporadic runs in additional tributary rivers, including the Grays, Skamokawa, Elochoman, Kalama, Lewis, and Sandy rivers (National Marine Fisheries Service, Biological Review Team 2008). On the Oregon coast south of the Columbia River, eulachon spawned in many coastal rivers, including the Yaquina, as recently as 1991 (Willson et al. 2006). As of 2008, however, the only remaining eulachon spawning on the Oregon coast is a small, irregular run in Tenmile Creek, about 121 kilometers [75 miles] south of the action area. Only three runs (Mad River, Redwood Creek, and Klamath River) are still reported from farther south, and of these, only the Klamath River run occurs regularly (National Marine Fisheries Service, Biological Review Team 2008).

There is as yet no take prohibition for eulachon, and the species is still subject to commercial harvest. Commercial harvest levels provide a useful, if not always accurate, estimate of relative changes in species abundance. Harvest records indicate that commercial catch levels were consistently high (more than 500 metric tons and often more than 1,000 metric tons) from about 1915 to 1992. In 1993, catches declined greatly and averaged less than 40 metric tons between 1994 and 2000. From 2001 to 2004, catches increased to an average of 266 metric tons, before falling to less than 5 metric tons from 2005 to 2008. Although reduced catches since 2001 have partly been due to harvest restrictions, fishery managers generally agree that the Columbia River run is greatly reduced compared to conditions before 1993, with evidence of a further significant decline since about 2001 (National Marine Fisheries Service, Biological Review Team 2008).

A variety of threats are likely responsible for the observed eulachon population declines, but these threats are not yet well understood. The NMFS biological review team evaluated and ranked threats to Columbia River eulachon (National Marine Fisheries Service, Biological Review Team 2008: Table 11) and assigned moderate to very high rankings in diminishing order of importance for the following:

- climate change impacts on ocean conditions,
- eulachon bycatch,
- climate change impacts on freshwater habitat,
- dams and water diversions, and
- water quality.

In contrast, other possible threats that have commonly been invoked to explain native fish declines—such as harvest, shoreline construction, and the effects of nonnative species—were ranked as relatively unimportant.

Eulachon are broadcast spawners in river channels, spawning at night over primarily sandy substrates in waters that range from a few feet to more than 7 meters (25 feet) in depth (Willson et

al. 2006). Nearly all adults die soon after spawning, while the fertilized eggs attach to the substrate by a short peduncle. The eggs hatch after 20 to 40 days, and the larvae are carried downstream to the estuary where larval development occurs (Wydoski and Whitney 2003). Records for the period 1949 to 2008 indicate that in the Columbia River 80% of the runs occur between February 1 and February 15. In Tenmile Creek, similar records for 1992 through 2008 indicate that 80% of the runs occur from early May to mid-June (National Marine Fisheries Service Biological Review Team 2008: Figure 5). Spawning runs last about 2 weeks (Willson et al. 2006).

4.14 Leatherback Sea Turtle

The leatherback sea turtle (*Dermochelys coriacea*) was listed as endangered throughout its distribution range in 1970 (35 FR 8491). Critical habitat was previously designated only in the Atlantic Ocean (44 FR 17710), but NMFS has recently proposed designation of critical habitat in the Pacific Ocean off areas of Washington, Oregon, and California (75 FR 319). A recovery plan was published in 1998 (National Marine Fisheries Service and U.S. Fish and Wildlife Service 1998a).

The leatherback has the widest distribution of any sea turtle, nesting on beaches in the tropics and subtropics and foraging into subpolar waters. They have evolved physiological and anatomical adaptations that allow them to exploit waters far colder than any other sea turtle species would be capable of surviving (National Marine Fisheries Service and U.S. Fish and Wildlife Service 2007). While the leatherback sea turtle is the most commonly observed sea turtle on the west coast, sightings are still infrequent. Most sightings occur in open water and are reported by recreational and commercial boaters (National Marine Fisheries Service and U.S. Fish and Wildlife Service 1998a).

Leatherbacks are the only sea turtle with a relatively soft shell consisting of a leathery, oil-saturated connective tissue overlaying loosely interlocking dermal bones (National Oceanic and Atmospheric Administration 2010). Their ridged shell and long flippers enable the species to migrate long distances across oceans. They are the largest sea turtle species growing to a length of 2 meters (6.6 feet) and weight of nearly 900 kilograms (1,984 pounds).

A pelagic species, Pacific Ocean leatherback turtles migrate long distances while foraging and return to specific areas for nesting. Eastern Pacific leatherback nest in Mexico and Costa Rica beaches while western Pacific nesting sites include Papua New Guinea, Papua, Indonesia, Solomon Islands, and Vanuatu (National Marine Fisheries Service and U.S. Fish and Wildlife Service 2007). Following nesting, they undergo poorly documented feeding migrations that stretch along the west coast to Alaska. Tracking studies indicate that leatherbacks nesting in the eastern Pacific typically forage in the southern waters while turtles nesting in the western Pacific migrate across the ocean foraging and some aggregate off the coast of California to forage on jellyfish (National Marine Fisheries Service and U.S. Fish and Wildlife Service 2007). Little is known about the dispersal and developmental habitats of hatchling, juvenile, and subadult leatherbacks, though some research suggests they remain in warmers water until they reach approximately 100 centimeters (39 inches) in length (Eckert and Sarti 1997 as cited in LGL Ecological Research Associates 2001). During their extensive migrations, leatherbacks feed primarily in the mid-water column on medusa, siphonophores, and salpae (National Oceanic and Atmospheric Administration 2010). They surface only to breathe.

Leatherbacks have been seen near Oregon from commercial seiners in pelagic areas, miles offshore, and along the continental slope (National Marine Fisheries Service and U.S. Fish and Wildlife Service 1998a). During the Oregon and Washington Marine Mammal and Seabird Survey, observers only documented 16 leatherback turtles: five were located offshore of northern Oregon along the continental slope and 11 were off the coast of Washington (Bruggeman et al. 1992). Tagged leatherback turtles have been observed offshore of the Oregon coast (TOPP 2010). Tuna fishermen observed a leatherback on August 25, 2007 offshore of Garibaldi, although no other location information was provided (Salem News 2007).

The current western Pacific population, based on nest counts, is approximately 2,700 to 4,500 breeding females. The greatest causes of decline and continuing primary threats to leatherbacks worldwide are long-term harvest (of adults and eggs on nesting grounds and adults and juveniles at sea), nesting habitat loss and degradation, and incidental capture in fishing gear. Incidental capture occurs mainly in gillnets, but may also occur in trawls, traps and pots, longlines, and dredges (National Oceanic and Atmospheric Administration 2010). LGL Ecological Research Associates (2001) believed the swordfish fishery off Chile and Peru was a major factor in the decline of eastern Pacific leatherbacks as well as of a shift in foraging quality. Reports of incidental catch in the eastern north Pacific include entanglement in gillnets and longline sets off the coast of Washington, Oregon, and California (National Marine Fisheries Service and U.S. Fish and Wildlife Service 1998a).

NMFS has recently proposed designating critical habitat in the Pacific Ocean off areas of Washington, Oregon, and California. The action area is located within Area 2, which ranges from Cape Flattery, Washington to the Umpqua River (Winchester Bay), Oregon from mean high tide, offshore to the 2,000-meter (6,562-foot) isobath (75 FR 319).

4.15 Green Sea Turtle

The green sea turtle (*Chelonia mydas*) was listed as threatened throughout its distribution range in 1978 (43 FR 32800). Critical habitat has only been designated on Culebra Island, Puerto Rico (63 FR 46693). No critical habitat has been designated in Oregon. A recovery plan for the Pacific green sea turtle was published in 1998 (National Marine Fisheries Service and U.S. Fish and Wildlife Service 1998b). In 1985, the 5-year status review concluded that the species was endangered in Florida and the Pacific coast, and threatened in the rest of the range. Since 1995, the 5-year status reviews have concluded that the species is endangered throughout its range (National Marine Fisheries Service and U.S. Fish and Wildlife Service 2007).

The green sea turtle is globally distributed, but generally found in the tropics and subtropics, between 30° North latitude and 30° South latitude. In the eastern Pacific, green sea turtles have been found from Baja California to Alaska, although they are generally found south of San Diego, California (National Marine Fisheries Service 2011). There are no breeding sites on the Pacific coast of the continental United States (National Marine Fisheries Service and U.S. Fish and Wildlife Service 2007).

Green sea turtles are the largest of the hard-shelled sea turtles. Green sea turtles were thought to be herbivorous as adults, but more recently have been determined to feed not only on seagrass and algae, but also on jellyfish, sponges, sea pens, and pelagic invertebrates (National Marine Fisheries Service and U.S. Fish and Wildlife Service 2007). Little is known about the pelagic juvenile life stage

(NMFS and USFWS 2007). Green sea turtles show fidelity to their natal beaches, highlighting the importance of protecting nesting sites in species recovery (NMFS and USFWS 2007).

In addition to effects on nesting areas, human interactions have been implemented in the take of green sea turtles, including: fisheries bycatch, global warming, contamination, vessel strikes, and intakes of coastal power plants (National Marine Fisheries Service and U.S. Fish and Wildlife Service 2007).

In 2009, a 12-inch juvenile washed ashore dead at Cannon Beach, Oregon, about 80 miles north of the action area (Beach Connection.net 2009), and a live green sea turtle was stranded on the southern Washington Coast (Hanson 2009).

4.16 Loggerhead Sea Turtle, Pacific DPS

The loggerhead sea turtle (*Caretta caretta*) was first listed as threatened throughout its range in 1978 (43 FR 32800). In September 2011, NMFS and USFWS listed nine DPS as threatened or endangered; the Pacific distinct population segment was listed as endangered (76 FR 58868).

Loggerhead sea turtles are found in tropical and temperate oceans around the world. In the eastern Pacific, loggerheads have been found from Chile to Alaska. In the United States, most sightings have been juveniles off the coast of California, although there have been occasional sightings in Oregon and Washington as well (National Marine Fisheries Service 2011; U.S. Fish and Wildlife Service 2010). In the North Pacific, loggerhead sea turtle nesting has only been observed in Japan (76 FR 58869).

Loggerheads have large heads and powerful jaws that they use to feed on hard-shelled prey including whelks and conch.

Threats to loggerhead sea turtles in the north Pacific include impacts on nesting habitat from coastal development, fisheries bycatch, channel dredging, sand extraction, marine pollution, and climate change. Illegal harvest of loggerhead sea turtles in Mexico continues to be a significant threat to this species.

4.17 Olive Ridley Sea Turtle

The olive (pacific) Ridley sea turtle (*Lepidochelys olivacea*) was first listed in 1978 (43 FR 32800). Breeding populations in the Pacific coast of Mexico are listed as endangered and the species is listed as threatened throughout the remainder of its range.

Olive Ridley sea turtles are relatively small, reaching an adult size of about 100 pounds. This species reaches sexual maturity at about 15 years, a younger age than the other sea turtle species. Nesting occurs singly or in mass numbers in an event known as an “arribada.” Nesting arribadas in the Pacific are located in Mexico, Nicaragua, Costa Rica and Panama, and single occur throughout the range of this species (National Marine Fisheries Service 2011b). In the eastern Pacific, nesting is primarily on beaches from Mexico south to Columbia (U.S. Fish and Wildlife Service 2011).

Olive Ridley sea turtles are primarily pelagic species, but also inhabit coastal areas, bays, and estuaries (National Marine Fisheries Service 2011b). This species is omnivorous, feeding on a variety of algae, crabs, tunicates, mollusks, shrimp, and fish.

Threats to olive Ridley sea turtles include harvest of eggs and adults, and accidental bycatch by long-line fishing gear, trawls, purse seines, and hook and line. Shrimp fisheries have been especially detrimental (National Marine Fisheries Service 2011b). Conservation measures have included efforts to protect nesting beaches from illegal harvest, and modifications to fishing gear to reduce or prevent accidental capture.

Olive Ridley sea turtles sightings in Oregon are unusual. However in 2009, a hypothermic female olive Ridley sea turtle was found stranded on Agate beach, in the action area (Hanson 2009). This turtle was taken to the Oregon Coast Aquarium for rehabilitation (Hanson 2009).

4.18 Steller Sea Lion, Eastern DPS

The Steller sea lion (*Eumetopias jubatus*) was first listed as threatened under the ESA in 1990 (55 FR 12645; April 5, 1990) following a precipitous decline in population over three decades, from nearly 192,000 adults and juveniles to fewer than 62,100. Additional research identified two distinct population segments. The western DPS occurs from Cape Suckling, Alaska west to Japan; an eastern DPS occurs east of Cape Suckling, including the California, Oregon, and Washington coastline (55 FR 12645). In 1994, NMFS determined that continued declines in the western DPS warranted its listing as endangered while reaffirming the status of threatened for the eastern DPS (55 FR 12645). A species recovery plan was completed in 1992, and a revised draft recovery plan was published in May 2007 (National Marine Fisheries Service 2007b). Critical habitat was designated in 1993 (58 FR 45269). In December 2010, in response to two petitions, NMFS issued a 90-day finding that the eastern DPS may warrant delisting (75 FR 77602); a status review, currently underway, will provide further information on this point. The eastern DPS may occur in the action area.

The eastern DPS of Steller sea lion ranges south along the west coast from the Gulf of Alaska to southern California, but is primarily concentrated in southeast Alaska and British Columbia. Steller sea lion habitat includes marine waters and terrestrial rookeries and haul-outs. Preferred terrestrial habitat is primarily on exposed rock shorelines associated with shallow well mixed waters, average tidal speeds, and gradual bottom slopes (National Oceanic and Atmospheric Administration 2007c; National Marine Fisheries Service 2007b). Other terrestrial habitat can be found on gravel or cobble beaches. Additional potential haul-outs can include a variety of habitats, such as jetties, breakwaters, navigational aids, floating docks, and sea ice. Factors influencing habitat selection may be influenced by substrate, exposure, oceanographic conditions, human disturbance, season, and prey availability (National Oceanic and Atmospheric Administration 2007c; National Marine Fisheries Service 2007b).

Prey availability is thought to influence seasonal changes in home ranges. Steller sea lions in California and Oregon populations feed chiefly on rockfish, hake, flatfish, salmon, herring skates, cusk eel, lamprey, squid, and octopus. They are also known to consume an occasional bird or other marine mammal (National Marine Fisheries Service 2007b). Tagging studies have shown Steller sea lions may range far offshore over the continental shelf while foraging.

Steller sea lions exhibit strong sexual dimorphism with adult males averaging 282 centimeters (111 inches) and 566 kilograms (1,248 pounds) while adult females average 228 centimeters (90 inches)

in length and 263 kilograms (580 pounds). Females reach sexual maturity at 3 to 8 years of age and may reproduce annually into their 20s. While males are sexually mature by 7 years of age, they are territorial but generally not able to defend a territory until they are 9 to 11 years of age. One male may breed with multiple females. Females generally give birth to a single pup between late May and early July on rookeries situated on remote islands, rocks, and reefs. Females will remain with pups for 1 week after birth and then leave for varying lengths of time to feed. They breed again quickly, about 11 days after giving birth, but undergo delayed implantation for about 3.5 months. Although they breed annually, there is a high rate of reproductive failure, with estimated birth rates ranging from 55% to 63% (National Marine Fisheries Service 2007b).

Following the breeding season, Steller sea lions disperse and increase use of haul-outs. Females leave rookeries when pups are about 2.5 months of age. Steller sea lions can travel great distances as adults for foraging, but show high fidelity to their natal rookeries. In general, adults and young-of-year pups remain within 500 kilometers (311 miles) of the natal rookery. However, some adult males have been known to travel 1,000 kilometers (621 miles) and some pups with their mothers were documented over 800 kilometers (497 miles) from their natal rookery. Some Steller sea lion pups tagged in Oregon have been observed in northern California. Juvenile Steller sea lions have been observed to travel the greatest distances, up to 1,785 kilometers (1,109 miles) from their natal grounds (National Marine Fisheries Service 2007b).

NMFS has identified two critical rookery habitat locations in Oregon: Rogue Reef and Orford Reef (58 FR 45269). Rogue Reef is approximately 258 kilometers (160 miles) south of the action area and the Orford Reef is approximately 209 kilometers (130 miles) south of the action area. The total number of non-pup sea lions counted during the breeding season surveys at these two sites increased from 1,461 in 1977 to 4,169 in 2002 (Brown et al. 2002). These sites are also used for haul-outs outside of the breeding season (National Marine Fisheries Service 2008b). During the fall and winter many Steller sea lions disperse from rookeries and increase their use of haul-outs (National Marine Fisheries Service 2008b).

Some Steller sea lion haul-outs are used year-around while others only on a seasonal basis (National Marine Fisheries Service 2008b). Like other pinnipeds, Steller sea lions use haul-outs for molting, resting, and non-breeding activity (National Marine Fisheries Service 2008b). Although a variety of pinniped haul-outs have been identified along the central Oregon coast, most are only used by harbor seals (*Phoca vitulina*) or California sea lions (*Zalophus californianus*). To the south, the closest known haul-out that has been used by Steller sea lions is at Seal Rock, 18 kilometers (11 miles) south of the action area. The next haul-out to the south is at Sea Lion Caves, 56 kilometers (35 miles) south of the action area. To the north, the closest haul-out is at Cascade Head, 45 kilometers (28 miles) north of the action area (Oregon Department of Fish and Wildlife 2008).

Outside of the peak of breeding season (mid-June), the number of Steller sea lions on individual haul-outs can vary considerably from day to day (National Marine Fisheries Service 2008b). While these haul-outs are fairly distant from the action area, they are within the Steller sea lion's foraging range. Steller sea lions can travel great distances as adults for foraging during non-breeding season, fall through spring, but show high fidelity to their natal rookeries during July and June. Tagged individuals have been shown to travel up to 1,770 kilometers (1,100 miles) from their natal grounds, but generally remain within 483 kilometers [300 miles] (National Oceanic and Atmospheric Administration 2007c). After these sometimes long migrations, they return to their natal rookery for pupping.

The eastern DPS as a whole has been increasing steadily at a rate of 3% to 4% annually for the past 30 years (up to 2002). Population estimates for 2002 were 45,000 to 51,000 animals (National Marine Fisheries Service 2008b). The estimated total eastern DPS population size based on 2005 pup counts is 47,885 (National Oceanic and Atmospheric Administration 2007d). A total of 5,297 Steller sea lions were counted at the ten Oregon rookeries and haul-outs during the 2002 survey (National Marine Fisheries Service 2008b). Within the eastern DPS, the central and southern California populations have experienced severe declines since the midcentury for reasons unknown. The current recovery plan stated the eastern DPS was stable and recommended it be considered for delisting (National Marine Fisheries Service 2008b).

In the 1800s and 1900s, large population declines were associated with human activities such as direct harvesting for bounty and shooting as a means of predator control, as well as habitat loss and degradation. However, conservation measures in the form of federal fishing restrictions, subsistence harvests, and restrictions on disturbance of important rookeries and haul-outs are believe to be responsible for recent population recovery. Several factors may currently affect population dynamics: predation, incidental take during commercial fishing activities, subsistence harvests, entanglement in marine debris, disease, contaminants, and global climate change. Given the relatively long-term (30 years) positive growth trend for the eastern DPS (with the exception of the southern edge of its distribution), NMFS (2007b) concluded there are currently no threats to recovery.

In Oregon, Steller sea lion designated critical habitat consists of the rookeries at Rogue Reef (Pyramid Rock) and Orford Reef (Long Brown Rock and Seal Rock). The sites extend around the entire shoreline of the islands at mean lower-low water. Critical habitat includes an air zone that extends 914 meters (3,000 feet) above areas historically occupied by sea lions at each major rookery in Oregon, measured vertically from sea level. Critical habitat includes an aquatic zone that extends 914 meters (3,000 feet) seaward in state- and federally managed waters from the baseline or base point of each major rookery in Oregon. These sites are not near the action area.

4.19 Killer Whale, Southern Resident DPS

The Southern Resident killer whale (*Orcinus orca*) population was listed as endangered on November 15, 2005 (70 FR 69903). A recovery plan was issued in 2008 (National Marine Fisheries Service 2008a). Critical habitat was designated in November 2006 (71 FR 69054) consisting of three areas all within the Puget Sound area in northern Washington, distant from the action area for the Proposed Project.

Although not officially recognized as separate subspecies, there are three ecotypes of killer whales in the northeastern Pacific Ocean: residents, transients, and offshores (National Oceanic and Atmospheric Administration 2007a). While their ranges overlap, these forms have significant morphologic, ecologic, behavioral, and genetic differences. In the United States, resident killer whales can be further subdivided into four communities: southern, northern, southern Alaska, and western Alaska north Pacific residents (National Oceanic and Atmospheric Administration 2007a).

The killer whale is the largest member of the dolphin family with males reaching up to 9.8 meters (32.2 feet) in length and nearly 10,000 kilograms (11 tons) in weight while females may reach 8.5 meters (27.9 feet) in length and 7,500 kilograms (8.3 tons) in weight (National Oceanic and Atmospheric Administration 2007a). Males are thought to reach sexual maturity when they reach a

length of 5.2 to 6.4 meters (17 to 21 feet), have an average life span of 30 years, and maximum longevity of 50 to 60 years. Females generally reach sexual maturity when they reach a length of 4.6 to 5.4 meters (15 to 18 feet), have an average life span of 50 years, and maximum longevity of 80 to 90 years (National Oceanic and Atmospheric Administration 2007a; National Marine Fisheries Service 2008a). Female residents are thought to give birth every 5 years for about 25 years, and then enter into a post-reproductive period. The birthing rate is highly variable and may be affected by a recent loss of a previous calf.

There does not appear to be a specific breeding season although most mating activities are thought to occur between April and October. The gestation period ranges from 15 to 18 months (National Oceanic and Atmospheric Administration 2007a) and calving primarily occurs from September to December, although calving has been occasionally observed through the year (National Marine Fisheries Service 2008a). The calves will remain close to their mother for the first year, followed by increasing time spent associating with other pod members.

Southern Resident killer whales prey mainly on salmon, other fishes, and cephalopods from late spring through fall (National Marine Fisheries Service 2008a; Northwest Fisheries Science Center 2007). Chinook salmon appear to be the preferred prey, even when other salmon species are more abundant. The Northwest Fisheries Science Center (2007) conducted research into foraging behavior and prey species. Foraging activities have been categorized as high energy (i.e., prone to quick chases and fast surfacings) or low energy (i.e., prone to moderate swimming, converging with other whales, and surfacing after long dives). Results of the study (conducted from June to October 2005) confirmed a strong preference for Chinook salmon, although other salmon and groundfish species were also consumed, and it may be that Chinook salmon abundance is critical to the whales' survival (Northwest Fisheries Science Center 2007). Little is known of their winter and early spring foraging. Resident killer whales may spend 50% to 67% of their time foraging, using echolocation, passive listening, and well developed vision to locate and capture prey (National Marine Fisheries Service 2008a).

From late spring through fall, the primary residence for Southern Resident killer whales is in the inland waterways of Washington State and British Columbia (Strait of Georgia, Strait of Juan de Fuca, and Puget Sound). Winter and early spring movements and distribution are generally unknown (National Marine Fisheries Service 2008a; National Oceanic and Atmospheric Administration 2007a). Pods have on occasion been observed off Washington and Vancouver Island, as far south as central California, and as far north as the Queen Charlotte Islands (Northwest Fisheries Science Center 2007). Offshore movements and distribution are largely unknown with only 32 confirmed coastal sightings over the last 30 years (Northwest Fisheries Science Center 2007).

The number of Southern Resident killer whales has never been large, perhaps numbering between 100 and 200 before 1960 (National Marine Fisheries Service 2008a). Capture of these whales for public display resulted in numbers dropping to fewer than 70 in 1973, when annual counts of killer whales began. Abundance estimates for killer whales are based on individual counts of the entire population each year. These estimates should be considered minimum estimates as some individuals may be missed. Based on the 2005 stock assessment report (Carretta et al. 2005), numbers generally increased until 1995 when 99 animals were counted. Numbers then declined to 79 whales in 2000, with the most recent count of 83 in 2003. The current estimate is 88, with one calf, J47, born in January 2010 (Center for Whale Research 2010).

Historically, overall killer whale numbers declined as a result of active commercial harvesting, live capture for aquariums, and direct mortality by humans to reduce their predation on other commercial fisheries. Widespread declines in abundance of prey species has also likely attributed to declines and may be contributing to limitations on population growth. Continuing threats to recovery include low prey abundance, contaminants, ship strikes, oil spills, fishing gear entanglement and noise disturbance (National Oceanic and Atmospheric Administration 2007a; 70 FR 69903).

Critical habitat for Southern Resident killer whales is located in northern Washington State at the Summer Core Area in Haro Strait and waters around the San Juan Islands, in Puget Sound, and in the Strait of Juan de Fuca (National Oceanic and Atmospheric Administration 2007a). No critical habitat exists in the action area.

4.20 Humpback Whale

The humpback whale (*Megaptera novaeangliae*) was listed as endangered in 1970 (35 FR 18319). Critical habitat has not been designated. A recovery plan was issued in 1991 (National Marine Fisheries Service 1991).

The humpback whale migrates seasonally for feeding and mating. While the International Whaling Commission recognizes only one Pacific stock of humpbacks, research suggests at least three populations within the United States Exclusive Economic Zone: the eastern north Pacific stock, central north Pacific stock, and western north Pacific stock (National Marine Fisheries Service 2005b).

- **Eastern North Pacific Stock:** The eastern north Pacific stock spends winter and spring in Central America and Mexico, and summer and fall in British Columbia.
- **Central North Pacific Stock:** The central north Pacific stock spends winter and spring in the Hawaiian Islands, and summer and fall in north British Columbia or southern Alaska from Prince William Sound west to Kodiak.
- **Western North Pacific Stock:** The western north Pacific stock spends winter and spring in Japan, and summer and fall in the Bering Sea and Aleutian Islands.

While their migration routes are not precisely known, the three stocks do follow general migration trends. Calving and mating occur during winter and spring while the summer and fall areas are primarily feeding grounds (National Oceanic and Atmospheric Administration 2009e). However, calf sightings and back-dating suggest that mating may occur at low rates throughout the year, possibly during migrations (National Marine Fisheries Service 1991). Movement along the western coastline of North America primarily occurs during summer and fall, but whale observations have been made in every month except February, March, and April (National Marine Fisheries Service 1991).

Humpback whales are baleen whales, which feed on small crustaceans (krill) and small fish (anchovies, herring, pollock, mackerel, and sand lance). Feeding behaviors are varied and include deep diving in pursuit of prey, cooperative feeding such as herding and formation (echelon) feeding, and “bubble cloud” feeding (National Marine Fisheries Service 1991; Weinrich et al. 1992). In the summer feeding areas, humpback whales’ distribution is likely driven by prey distribution, which varies continuously (National Marine Fisheries Service 1991).

Humpback whale sightings in northwest coastal waters are generally uncommon, but studies off the coasts of Washington, Oregon, and California have given a good regional picture of timing and abundance of the whales' use of the region (Calambokidis et al. 2003). For the central Oregon coast, where many surveys have originated from the Hatfield Marine Sciences Center in Newport, six surveys between 1990 and 2002 found a total of 92 humpback whales, for an average of 15.2 whales per survey. These counts were rather low in the context of data from the Gulf of the Farallones and the Santa Barbara Channel, both in California, which seem to be regional centers of humpback whale activity. At the Gulf of the Farallones, for example, annual surveys from 1986 to 2002 found an average of 46 humpback whales. Observations made off the central Oregon coast have found the whales from 14 to 36 kilometers (9 to 22 miles) offshore (Calambokidis et al. 2003).

The estimated pre-1905 population of humpback whales in the North Pacific was about 15,000 (Rice 1978 cited in National Oceanic and Atmospheric Administration 2009). As a result of the whaling industry, populations were reduced to about 1,200 whales by 1966 (Johnson and Wolman 1984 cited in National Oceanic and Atmospheric Administration 2009). Following restrictions on the whaling industry as a whole, and prohibition of taking of humpback whales since 1966, the whales' population has been increasing and the total number of humpback whales in the North Pacific has been estimated at between 18,000 and 20,000 (Calambokidis et al. 2008 cited in National Oceanic and Atmospheric Administration 2009). Based on summer and fall ship line-transect surveys in 1996 and 2001, the number of humpback whales along the California, Oregon, and Washington coast was estimated at 1,391 (National Oceanic and Atmospheric Administration 2009).

4.21 Blue Whale

The blue whale (*Balaenoptera musculus*) was listed as endangered in 1970 (35 FR 18319). Critical habitat has not been designated. A recovery plan was issued in 1998 (National Marine Fisheries Service 1998a).

Blue whales inhabit most oceans and seas of the world, but are rarely sighted off of Oregon (Lohn pers. comm.). One stock is recognized for the north Pacific, though it is thought to include from one to five separate blue whale populations (National Oceanic and Atmospheric Administration 2009b). One of these populations includes blue whales that occur in the Washington, Oregon, and California coastal waters. Blue whales feed in this area during summer and fall and then migrate south to Mexico and possibly as far as Costa Rica where they spend winter and spring (Oregon State University 2008). The population is most abundant off California and rarely observed off of the Oregon or Washington coasts. In 2004, four of 12 blue whales tagged off southern California in late summer were briefly located in an 8- kilometer (5-mile) area of water off Coos Bay, Oregon. Calambokidis and Barlow (2004) described blue whales as having a broader and more offshore distribution as compared to humpback whales.

Blue whale mating is unknown but calving takes place in winter after an 11-month gestation. The calving interval is about 2 to 3 years. Researchers from OSU (2008) were able to tag and track blue whales to an area known as the Costa Rican Dome, which has a significant upwelling feature known to concentrate krill, a primary whale prey species. The researchers suggested the productivity of this area may allow blue whales to feed during their winter calving and breeding season in contrast to humpback whales, which are thought to fast during the winter breeding season.

As with most baleen whales, blue whales feed on krill and possibly pelagic crabs (Reeves et al. 2002). During summer feeding, they have been known to consume more than 3.6 metric tons each day. Blue whales are often concentrated near continental shelf breaks downstream of upwelling centers where their preferred prey, krill, is concentrated. Calambokidis et al. (2003) studied the dive behavior of blue whales. Based on that limited research, these whales spend most of their time submerged. Resting period dives, during the night, were mostly about 15 meters (49 feet) deep. Foraging dives, during the daylight hours and intermittently at night, were about 75 meters (246 feet) during the hours of darkness, and 100 to 200 meters (328 to 656) deep during the daytime.

As with most species of large whales, the blue whale population was devastated by commercial whaling in the late 1800s and 1900s until the International Whaling Commission prohibited taking of this species in 1966. The population size was estimated at greater than 350,000 prior to the advent of commercial whaling. The species has been slow to recover, and current worldwide population estimates range from 8,000 to 14,000 blue whales (American Cetacean Society 2004a). The most recent estimate for the blue whale population in the eastern north Pacific is 2,842 whales (National Oceanic and Atmospheric Administration 2009).

Ongoing threats to blue whale recovery include incidental ship strikes and potential gillnet fisheries mortality. No blue whale gillnet mortalities have been observed and overall whale mortalities cetacean entanglement rates in the drift gillnet fishery dropped considerably following the requirement to use pingers and efforts to educate workers in the commercial fishing industry. However, there were five blue whale deaths associated with ship strikes from 2003 to 2007, and during that period there were an additional six injuries of unidentified large whales attributed to ship strikes (National Oceanic and Atmospheric Administration 2009, Berman-Kowalewski et al. 2010). Blue whales are thought to occur more offshore than humpback whales (National Marine Fisheries Service 1998). Additional threats may include low prey abundance due to habitat degradation and disturbance due to increasing levels of anthropogenic noise in the world's oceans (National Oceanic and Atmospheric Administration 2009).

4.22 Fin Whale

The fin whale (*Balaenoptera physalus*) was listed as endangered in 1970 (35 FR 18319). Critical habitat has not been designated. A draft recovery plan is currently available (National Marine Fisheries Service 2006).

Fin or finback whales occur in all the major oceans of the world but predominately occupy temperate and polar waters. For stock assessment purposes, NMFS recognizes three populations in the United States Pacific waters: Alaska (northeast Pacific), California/Oregon/Washington, and Hawaii (National Oceanic and Atmospheric Administration 2008). Migratory patterns are not well understood, but the waters off central southern California seem to be used year-round while more northerly waters, from northern California to the Gulf of Alaska, are primarily used in the summer (National Oceanic and Atmospheric Administration 2008).

Fin whale females are slightly larger than males. Little is known of their reproductive behavior, breeding, or calving areas, although most breeding activity is thought to occur in the winter. Sexual maturity is thought to occur between 6 and 10 years of age and the female calving cycle is 2 to 4 years (American Cetacean Society 2004b; National Marine Fisheries Service 2006). Calves nurse for 6 to 8 months until they reach approximately 10 to 12 meters (33 to 39 feet) in length.

Fin whales feed on krill and small pelagic schooling fish (herring, walleye pollock, capelin, and anchovies) and have been known to consume up to 1,800 kilograms of food per day (American Cetacean Society 2004b; National Marine Fisheries Service 2006). They have been observed circling schools of fish at high speeds and then turning on their right side to consume the fish. They are capable of dives up to 550 meters (1,804 feet) in depth.

The pre-whaling population of fin whales in the north Pacific was estimated at between 42,000 and 45,000 animals, declining to between 13,620 and 18,680 by 1973 (Ohsumi and Wada 1974, cited in National Oceanic and Atmospheric Administration 2008). Because commercial whaling in the United States was prohibited in 1972 and the International Whaling Commission prohibited the taking of North Pacific fin whales in 1976, the population would be expected to have increased but population trend data is unavailable. Based on ship surveys conducted between 1991 and 2001, estimates of 280 to 380 fin whales were made off the Oregon and Washington coasts while the majority (1,600 to 3,200 fin whales) was observed offshore of California (National Marine Fisheries Service 2006). The most recent population estimate for the California, Oregon, and Washington stock is 2,636 fin whales within 555.6 kilometers (300 nautical miles) of the coast (National Oceanic and Atmospheric Administration 2008).

Existing threats to the fin whale recovery include unauthorized takes, ship strikes, drift net entanglement, reduced prey abundance due to overfishing, habitat degradation, and disturbance from low-frequency noise (National Marine Fisheries Service 2006; National Oceanic and Atmospheric Administration 2008).

Chapter 5
Environmental Baseline

This chapter presents an analysis of the effects of past and ongoing human and natural factors leading to the current status of each potentially affected species, its habitat (including designated critical habitat), and ecosystem within the action area. The environmental baseline summarizes a species' health at a specified point in time; it does not include the effects of the proposed action.

The baseline includes state, tribal, local, and private actions already affecting the species or that will occur contemporaneously with the consultation in progress. Unrelated federal actions affecting the same species or critical habitat that have completed formal or informal consultation are also part of the environmental baseline, as are federal and other actions within the action area that may benefit listed species or critical habitat.

5.1 Geology and Sediments

The Oregon coastal region has been influenced by regional tectonic uplift and glacial sea level fluctuations over the past several million years (U.S. Army Corps of Engineers and U.S. Environmental Protection Agency 2001). During the last glacial maximum, sea level was approximately 122 meters (400 feet) lower than at present. Marine terrace deposits that are less than 1 million years old and consist primarily of sand and silt were deposited over a sequence of much older Miocene siltstones, mudstones, and sandstones. Yaquina Head and offshore reefs were formed from a layer of basalt that intruded on the marine sedimentary rocks. Recent marine sands cover the older bedrock on the continental shelf.

Oregon's present-day continental shelf is relatively narrow, and extends about 16 to 74 kilometers (10 to 46 miles) off the coast (Electricity Innovation Institute 2004). A rocky submarine bank (Stonewall Bank) begins about 24 kilometers (15 miles) offshore of Yaquina Bay and extends southwest to the Siuslaw River, where the shelf is about 48 kilometers (30 miles) across (Electricity Innovation Institute 2004; U.S. Army Corps of Engineers and U.S. Environmental Protection Agency 2001). The bottom sediments shoreward of Stonewall Bank are mostly fine sand to depths of 91 meters (300 feet), with little silt and clay (U.S. Army Corps of Engineers and U.S. Environmental Protection Agency 2001). Sandy sediments extending 5 to 16 kilometers (3 to 10 miles) offshore are typical of much of the Oregon coast, with small variations in the concentration of fine-sized particles in the seafloor sediments due to local currents.

Data collected at ocean dredged material disposal sites off Yaquina Bay indicate that local sediments near the action area are consistent with those found on much of the Oregon shelf, predominantly consisting of medium- to fine-grained sand with some shell debris and a minor amount (less than 2%) of silt and smaller material (U.S. Army Corps of Engineers and U.S. Environmental Protection Agency 2001). There is little silt or clay in nearshore sediments of this region, as a result of winnowing by waves. Rocky outcrops are found in some locations, and within the action area, one rocky reef occurs about 2.4 kilometers (1.5 miles) off Yaquina Head, rising to a depth of about -40 meters mean lower low water. The reef has no kelp, but because of the sensitivity of rocky reef habitats, no project components would be sited in that area.

5.2 Oceanography

The high wave energy flux on the Oregon coast is due to prevailing western winds and large fetch[8] of the Pacific Ocean (Boehlert et al. 2008). Wave energy on the coast varies considerably by season, such that the wave energy flux is approximately eight times greater during winter than summer offshore of Douglas County, Oregon (Bedard 2005).

Episodic winter storms bring large waves from the west and southwest. Currents generated by these waves are uniform throughout the water column, and may have a substantial influence on the transport of fine sediments (silt and clay) at depths of greater than 37 meters (120 feet) (U.S. Army Corps of Engineers and U.S. Environmental Protection Agency 2001).

The circulation of ocean surface waters on Oregon's continental shelf varies seasonally with changing wind stress patterns. During the summer, offshore high pressure systems and associated northerly or northwesterly winds drive upwelling of deep, dense, cold water toward the ocean surface. At this time, circulation of surface waters on the continent shelf is dominated by the southward-flowing California Current (U.S. Army Corps of Engineers 2001). In contrast, low offshore pressure systems during winter drive southwesterly storm winds that result in surface circulation dominated by the northward-flowing Davidson Current.

On the inner continental shelf (depths less than about 37 meters [120 feet]), bottom sediments are transported by a combination of wind-driven currents, wind waves, tidal currents, and estuarine-induced currents (U.S. Army Corps of Engineers and U.S. Environmental Protection Agency 2001). Bottom currents on the inner continental shelf are capable of transporting sand-sized sediment.

On the middle continental shelf (depths of 37 to 91 meters [120 to 300 feet]), water circulation is mainly influenced by wind-driven currents, whereas on the outer continental shelf (depths of 91 to 183 meters [300 to 600 feet]), shoaling waves and regional currents control water circulation seasonally (U.S. Army Corps of Engineers 2001). The net direction of bottom currents on the mid- to outer continental shelf is northward, because the subsurface part of the Davidson Current is believed to flow northward year-round. Bottom currents along the mid- to outer continental shelf are capable of transporting silt and finer-grained sediments (U.S. Army Corps of Engineers 2001).

5.3 Acoustic Environment

The study area for underwater sound and vibration is defined as the vicinity within 4.8 kilometers (3 miles) of the project site, and the navigation lanes between the onshore support docks and the project site. The project site off the coast near Newport already experiences considerable commercial marine vessel traffic from the Port of Newport, which is home to one of Oregon's largest commercial fishing fleets. The project site is close enough to shore to possibly be affected by surf sound. Therefore, existing underwater sound levels are expected to be moderate to high (Oregon Wave Energy Trust 2009).

The background sound levels in the project site are being studied. OSU has deployed listening devices in and near the project site to gather background data in 2010 and 2011. Though the

[8] *Fetch* is defined as the area over a water body in which the wind blows in an essentially constant direction. Longer fetch lengths are associated with the size of the waves produced.

analysis of the data has not yet been completed and full results of the study are not available, preliminary results indicate that ambient noise levels in and around the project site are relatively high due to breaking waves, wind, vessel traffic, marine mammals, and fish.

5.4 Water Quality

The principal sources of information for water quality in the action area include water quality data from the Oregon Department of Environmental Quality (ODEQ) Laboratory Analytical Storage and Retrieval Database (LASAR) (Oregon Department of Environmental Quality 2010), and sediment quality data reported during studies performed prior to designation of the dredged disposal area in Yaquina Bay, approximately 8 kilometers (5 miles) south of the project site (U.S. Army Corps of Engineers and U.S. Environmental Protection Agency 2001). The dredged disposal area study analyzed conditions in an offshore area at a distance and in water depths comparable to those of the action area, and is therefore, expected to be representative of conditions in the action area.

The monitoring site closest to the project site is Site 30244, located at latitude 44.6851 N, longitude 124.1684 W, approximately 2.4 kilometers (1.5 miles) west of the project site. Water quality data were collected at this site on June 11, 2003, by lowering a sonde from the surface to the sea floor and back, collecting water samples at depths of 2, 30, and 60 meters (6, 98 and 197 feet). Results, summarized in Table 5-1, indicate a water depth of about 60 meters (197 feet) with a steady decline in chlorophyll a and dissolved oxygen with depth. At the time of sampling, there was no apparent thermocline; temperatures declined gradually from the surface to about 30 meters (98 feet) in depth, and were fairly uniform below that depth. Nutrient availability increases with depth, reflecting a reduced level of biological activity as a result of the low temperature, darkness, and low dissolved oxygen.

Table 5-1. Water Quality Data from ODEQ Site 30244

Parameter	Value Near Surface (2 meters)	Value in Mid-Water (30 meters)	Value Near Bottom (60 meters)
Chlorophyll a (µg/L)	25.46	3.28	0.33
Dissolved oxygen (mg/L)	9.1	4.9	2.9
pH	8.1	7.8	7.7
Salinity (parts per thousand)	32	33	34
Temperature (°C, °F)	11.3, 52.3	7.5, 45.5	7.3, 45.1
Transmittance (%)	68	94	92
Nitrate/nitrite as N (mg/L)	0.0317	0.394	0.482
Percent saturation dissolved oxygen (%)	101	51	29
Pheophytin a (µg/L)	1.8	0.2	0.2
Total suspended solids (mg/L)	19	15	12

Notes: µg/L=micrograms per liter, mg/L=milligrams per liter.
Source: Oregon Department of Environmental Quality 2010.

Water quality on the Oregon coast varies seasonally. During winter, temperatures of nearshore surface waters are about 9 to 10°C and salinities are about 30 to 32 practical salinity units (Boehlert et al. 2008, Landry et al. 1989). Light transmission is higher during winter, and decreases with the

transition to summer during upwelling conditions and when phytoplankton bloom (Boehlert et al. 2008). During summer, upwelling brings colder, more saline water onto the inner shelf. Summer surface temperatures are about 12 to 14°C and salinities are about 30 to 32 practical salinity units (Boehlert et al. 2008, Landry et al. 1989). Wind and wave conditions are relatively calm during the spring (March and April) and fall (September and October) transitions between oceanographic regimes (Boehlert et al. 2008).

Sediment quality data have been recovered from Yaquina Bay during sampling performed in 1984 2008 (U.S. Army Corps of Engineers 2011). The 18 sample locations, although several miles south of the project site, are in the open waters off Yaquina Bay, an area that, like the project site, has a uniform fine sand bottom. Metals concentrations detected in all samples were far below the screening levels outlined in the Sediment Evaluation Framework (SEF) for the Pacific Northwest (SEF 2009). All detected concentrations of organic compounds were either below SEF screening levels or laboratory reporting limits. Marine Vegetation and Algae

Marine plants include phytoplankton and sessile algae. Phytoplankton comprise simple free-floating unicellular organisms like blue-green algae, diatoms, dinoflagellates, silicoflagellates, and coccolithophores. Sessile algae include the many species of large brown and red algae that are commonly referred to as seaweeds. Sessile algae occur in rocky intertidal and subtidal areas of the coast within the photic zone (water depths to which sunlight can penetrate). The largest such algae include several species of brown kelp, which along the Oregon coast consist almost exclusively of bull kelp (*Nereocystis luetkeana*), which grows subtidally and has special legal status because of its value as a commercial raw material and habitat for protected fish species (U.S. Army Corps of Engineers and U.S. Environmental Protection Agency 2001, 2008).

No hard or rocky substrate is known to occur within the vast majority of the project site; however, a small amount of rocky reef was recently discovered in a narrow area in approximately 40 meters (131 feet) of water approximately 1.9 kilometers (1 nautical mile) east of the project site. Bull kelp have not been found on these rocky areas because water depths in the project site preclude the presence of any bull kelp (Henkel pers. comm.2010).

5.5 Zooplankton and Fish Larvae

The zooplankton community inhabiting offshore central Oregon consists of small invertebrate organisms that spend their entire life cycle in the water column. Species composition changes and is influenced by various factors such as prevailing ocean currents, coastal upwelling, and offshore wind direction. The Corps and the U.S. Environmental Protection Agency (EPA) (2008, 2009, citing Keister and Peterson 2003) describe the coastal zooplankton community inhabiting central Oregon, including the action area, as being dominated by copepods. In total, 58 copepod species are reported being present in these waters, of which eight occur throughout the year, seven occur only during the summer, and six occur only in the winter. Species composition is seasonally dependent. Overall population biomass and individual species abundance are typically lower in the winter than in the summer months. During the summer months when the offshore winds blow predominantly from the northwest, surface waters move southward, allowing the colder, more saline, and nutrient-rich waters from deeper water depths to upwell along the coast. Between January and May, the megalops larvae of the Dungeness crab (*Cancer magister*) are abundant inshore.

Three species assemblages of fish larvae have been described as inhabiting the coastal waters of Oregon: coastal, transitional, and offshore. The coastal assemblage occurs in the action area and is typically dominated by smelts (*Osmeridae*) which account for 50% of the population, and English sole (*Parophrys vetulus*), sandlance (*Ammodytes hexapterus*), sanddab (*Citharichthys sordidus*), starry flounder (*Platichthys stellatus*), and Pacific tomcod (*Microgadus proximus*). The highest fish larvae abundance is reported to occur between February and July (U.S. Army Corps of Engineers and U.S. Environmental Protection Agency 2001). Auth et al. (2007) reported northern anchovy (*Engraulis mordax*), slender sole (*Lyopsetta exilis*), rockfish (*Sebastes* spp.), northern lampfish (*Stenobrachius leucopsarus*), and blue lanternfish (*Tarletonebeania crenulairs*) as the dominant taxa along the Newport hydrographic line.

5.6 Benthic Invertebrates

Benthic invertebrate communities inhabiting the nearshore marine environment provide important secondary production in marine food webs, are integral to the breakdown and recycling of organic material in the marine ecosystem, and provide a key food source for important commercial and recreational fish and macroinvertebrate species like Dungeness crab, as well as for other protected or managed fish species.

Benthic invertebrate studies conducted between 1984 and 2000 for the Corps ocean dredged material disposal site program offshore of Newport, Oregon and Yaquina Bay provide important local information on the benthic infaunal and epifaunal community of the project site. One of the investigated offshore disposal sites is located south of the project site, north of Yaquina Bay (U.S. Army Corps of Engineers and U.S. Environmental Protection Agency 2001). Seafloor sediments at this site were described as being mostly medium- to fine-grained marine sands with some shell debris and were reported out to a water depth of 48.7 meters (160 feet) (U.S. Army Corps of Engineers and U.S. Environmental Protection Agency 2001). Based on benthic invertebrate studies conducted by the Corps between 1981 and 2007 at ocean disposal sites offshore Coos Bay, Rogue River, Siuslaw River, Chetco River, Umpqua River and Yaquina Bay, Oregon, this benthic invertebrate community is consistent throughout the nearshore coastal waters of Oregon at similar water depths and with comparable sediment types and can be expected to be representative of the benthic infaunal community inhabiting the action area (U.S. Army Corps of Engineers and U.S. Environmental Protection Agency 2008, 2009).

The invertebrate infaunal community described by the Corps and EPA (2001) is typical for sandy offshore habitats along the entire Oregon coast. This community is dominated by highly mobile organisms adapted to shifting sediments. The infaunal community includes assorted polychaete worms and barnacles (*Cirripedia*) that attach to small rocks and shell debris (U.S. Army Corps of Engineers and U.S. Environmental Protection Agency 2008, 2009). The infaunal community has higher species diversity and individual species abundance in the late summer than in late spring to summer, a condition that was attributed to increased food availability following the upwelling period (U.S. Army Corps of Engineers and U.S. Environmental Protection Agency 2001).

The invertebrate epifaunal community includes the sand dollar (*Dendraster eccentricus*), surface dwelling carnivorous gastropods (*Olivella biplicata* and *O. pycna*), pink shrimp (*Pandalus jordanii*), assorted sea stars and anemones, and the Dungeness crab (*Metacarcinus magister*) (U.S. Army Corps of Engineers and U.S. Environmental Protection Agency 2001).

5.7 Fish

The nearshore and offshore regions of the Yaquina Head area encompass both rocky and soft bottom subtidal habitats and the open water pelagic environment. This area, therefore, supports a variety of fish species that typically inhabit all three habitats with frequent movement of fish between them. Typical fish species that inhabit these areas are discussed below. Although very little hard bottom substrate is known to be present in the project site, natural subtidal reefs closer inshore at Yaquina Head support pelagic and benthic fish communities that associate with rocky, rather than soft, substrate.

Fish commonly observed in sandy bottom areas near the project site include English sole, Butter, sole, Pacific sanddab, speckled sanddab, and starry flounder (U.S. Army Corps of Engineers and U.S. Environmental Protection Agency 2010; Henkel pers. comm. 2011).

Rocky subtidal, or hard bottom, habitats typically experience a wide variety of wave and current regimes, substrate, depths, and food sources, producing diverse biological communities (Oregon Department of Fish and Wildlife 2006). The rocky reefs off Yaquina Head provide important habitat for fish species that include sculpins (*Cottidae*), surf perch (*Embiotocida*e), and rocky reef fishes. Shallow reefs up to 20 meters (66 feet) in depth are dominated by black rockfish (*Sebastes melanops*), while deeper reefs are dominated by lingcod (*Ophiodon elongates*), black-and-yellow rockfish (*Sebastes chrysomelas*), and black rockfish (U.S. Army Corps of Engineers and U.S. Environmental Protection Agency 2001; Henkel pers. comm. 2011). Although these areas of rocky subtidal habitat are located outside the action area, juvenile lingcod and rockfish will use nearby soft bottom habitat, and older mature fish typically associated with rocky subtidal habitats will often be found swimming in the deeper soft bottom regions. As a consequence, these taxa may be present in the action area.

A number of environmental factors affect the fish species present in the pelagic zone, including light penetration, water temperature, proximity to river plumes, and underwater currents (Oregon Department of Fish and Wildlife 2006). Pelagic species commonly found near the action area include Pacific herring (*Clupea pallasi*), northern anchovy, and Pacific Ocean perch (*Sebastes alutus*). The area also has salmon, steelhead, and shad that migrate through the Yaquina Bay estuary to spawn upriver (U.S. Army Corps of Engineers and U.S. Environmental Protection Agency 2001).

5.8 Sea Turtles

Pacific leatherback sea turtles (*Dermochelys coriacea*) are known to occur in offshore waters of the central Oregon coast (National Marine Fisheries Service and U.S. Fish and Wildlife Service 1998a, 2007). Green sea turtles in the Pacific Ocean are generally found south of San Diego, California; however, they have been found from Baja, California to Alaska (National Marine Fisheries Service 2011). Loggerhead sea turtles (*Caretta caretta*) also have been seen as far north as Alaska, but most U.S. sightings have been made off the California coast. The olive Ridley sea turtle is also more commonly seen in California waters, although there is at least one case of a hypothermic olive Ridley sea turtle washing ashore in the action area (Hanson 2009). For further discussion, see Chapter 4, Description of the Species That May Be Affected.

5.9 Marine Birds

Bird species commonly observed inhabiting and using the coastal waters of central Oregon near Yaquina Bay include shearwaters, storm petrels (*Hydrobatidae*), gulls (*Laridae*), common murres (*Uria aalge*) and Cassin's auklets (*Ptychoramphus +aleuticus*) during the late spring and early summer months, with phalaropes (*Phalaropus* spp.), fulmars (*Fulmarus* spp.), and California gull (*Larus californicus)* predominant during the fall months. During the winter months, phalaropes, California gull, fulmars, other assorted gulls, murres (*Uria* spp.), auklets *(Aethia* spp. and *Ptychorhamphus* spp.), and kittiwakes (*Rissa* spp.) are common. Western *(Aechmophorus occidentalis*), red-necked *(Podiceps grisegena),* horned *(P. auritus),* and eared *(P. nigricollis)* grebes, Caspian tern *(Sterna caspia),* three other species of tern, three species of cormorant, pigeon guillemot *(Cepphus columba),* and red-throated *(Gavia stellata),* Pacific *(G. pacifica),* and common or great northern *(G. immer)* loons also frequent the region (U.S. Army Corps of Engineers and U.S. Environmental Protection Agency 2001). Brown pelicans *(Pelecanus occidentalis*) are present in the summer and fall as post-breeding transients. Western snowy plovers *(Charadrius alexandrines nivosus)*, an Oregon-listed threatened species, are known to forage on shorelines south of the action area (U.S. Fish and Wildlife Service 2007b). Other protected species that may forage in or near the action area include short-tailed albatross (*Diomedea albatrus)* and marbled murrelet *(Brachyramphus marmoratus*) (U.S. Army Corps of Engineers and U.S. Environmental Protection Agency 2001). See Chapter 4, Description of the Species That May Be Affected, for further discussion of the plover, murrelet, and albatross.

5.10 Marine Mammals

Marine mammal species potentially present in the action area include cetaceans (whales, dolphins, and porpoises) and pinnipeds (seals and sea lions). The most common year-round inhabitants are the pinnipeds: Pacific harbor seal (*Phoca vitulina*), and Steller sea lion (*Eumetopias jubatus*). Male California sea lions (*Zalophus californianus*) and northern elephant seals (*Mirounga angustirostris*) are occasionally observed foraging in southern and central Oregon coastal areas but are not regular inhabitants (Oregon Department of Fish and Wildlife 2010).

Cetaceans potentially present in the action area include transient killer whales (*Orcinus orca*), which appear along the Oregon coast in April, in conjunction with the California gray whale's northward migration, while killer whales of the southern resident group occasionally pass by during migrations from their principal range in Washington and British Columbia, en route to foraging grounds off central California, where they seasonally feed on migrating Chinook salmon (Northwest Fisheries Science Center 2007). Other whales commonly observed offshore of the Oregon coast include blue whale (*Balaenoptera musculus*), finback whale, (*Balaenoptera physatus*), sei whale (*Balaenoptera borealis*), Pacific right whale (*Balaena glacialis japonica*), humpback whale (*Megaptera novaeangliae*), and sperm whale (*Physeter catodon*). California gray whales (*Eschrichtius robustus*) occur along the central Oregon coast throughout the year with a small population of resident whales present between May and October. Migrating gray whales occur between March and June on their northward migration, and between December and March on their southward migration. Ortega-Ortiz and Mate (2008) report that in 2008, gray whales were observed offshore of Yaquina Head and transiting the action area during both southward and northward migrations. Gray whales migrated southward through the action area beginning in mid-January, with the peak of the migration

occurring in late January. Northbound migrating gray whales were observed as early as late February, with the peak migration occurring between late March and mid-April. Ortega-Ortiz and Mate (2008) further reported observing gray whale movements predominantly occurring in parts of the ocean where water depths are between 10 and 70 meters (33 and 230 feet).

In 2010 and 2011, HMSC conducted surveys in and around the project site to document the presence of a number of benthic fishes and invertebrate species. Although this research was not conducted to identify marine mammals, it may be noted that no whale species were observed in the project site during the research (Henkel pers. comm. 2011).

See Chapter 4, Description of the Species That May Be Affected, for further discussion of marine mammals protected under the ESA.

Chapter 6
Analysis of Effects

This chapter analyzes the direct and indirect effects of the proposed action on species protected under the ESA. *Direct effects* include the direct or immediate effects of the Proposed Project on the species or its habitat. Because the proposed action includes DOE funding of the entire Proposed Project, from design through operations, both construction and operational effects are assessed as direct effects. *Indirect effects* are effects caused by or resulting from the proposed action that are later in time and are reasonably certain to occur.

This chapter also assesses interrelated and interdependent effects. An *interrelated activity* is an activity that is part of the proposed action and depends on the proposed action for its justification. An *interdependent activity* is an activity that has no independent utility apart from the action under consultation or because of the proposed action.

This analysis considers first the USFWS jurisdictional species listed in Table 1-1, and then the NMFS jurisdictional species.

6.1 Direct Effects

6.1.1 Marbled Murrelet

6.1.1.1 Distribution in the Action Area

Marbled murrelets occupy both terrestrial and marine habitats. No marbled murrelet nesting and no marbled murrelet designated critical habitat occur in the action area. However, murrelets may loaf or forage on marine waters in the action area. In so doing, they may dive around and under the instrumentation buoy or vessel, WEC device, and mooring systems.

6.1.1.2 Risks of Entanglement and Collision

None of these structures associated with the Proposed Project are associated with lines or cables small enough to pose an entanglement risk to murrelets. It is unlikely that a murrelet would collide with these structures, given that they easily avoid natural obstacles such as rocks or logs. There is, however, a possibility of collision with structures above the water surface, especially at night. To minimize this risk, the instrumentation buoy or vessel and WEC device would be lighted in accordance with U.S. Coast Guard regulations and in consideration of protection for offshore birds. The lights would be shielded, to direct light only towards approaching watercraft, and not directly upward. The flash intensity would be selected to meet the minimum U.S. Coast Guard requirement for navigational safety, and flashes will occur at intervals of not less than 4 seconds.

Regarding bird collisions with above-water portions of ocean energy projects, the Scottish Executive (2007) concluded that, “If schemes are visible from above the surface, birds in flight will probably operate broadly similar avoidance tactics to those employed when encountering other natural and man-made obstructions, i.e., by taking alternative flight routes and avoiding obstructions to a greater degree at night.” Moreover, the instrumentation buoy and WEC devices would be small

structures, not extending more than 10 meters (33 feet) above the water surface and lacking guy wires. These structures pose proportionally small risk to birds.

6.1.1.3 Exposure to Contaminants

Murrelets diving near the instrumentation buoy, vessel, or WEC device would be at risk of exposure to any contaminant leaks from these devices. The instrumentation buoy would contain a transformer that contains a biodegradable, vegetable-based dielectric fluid. It would also contain a diesel-powered generator and up to 908 liters (240 gallons) of diesel fuel in three baffled tanks. The dielectric fluid and diesel fuel would only be spilled in the event of catastrophic damage to the instrumentation buoy sufficient to rupture the buoy's hull, the compartment in which the transformer is housed, and the diesel fuel tanks. This is an extremely unlikely event that is not considered to be reasonably foreseeable. Therefore, the risk to animals in the action area resulting from exposure to contaminants from the instrumentation buoy is discountable.

The WEC device could contain dielectric or hydraulic fluid, or could contain no fluids at all, depending on the design of the WEC device being tested. Again, release of such fluids would only occur in the event of catastrophic damage to the WEC device. Before testing, each WEC device developer would submit to NNMREC for review and approval a spill contingency and emergency response plan, which would contain measures intended to ensure a rapid response and recovery that minimizes potential environmental harm. In view of the low likelihood of such a spill, the risk to animals in the affected waters would be discountable.

The instrumentation buoy, vessel, WEC device, and floats used in the mooring system would be treated with antifouling coatings. These coatings would not contain TBT, but would likely use a combination of cuprous oxide and organic substances to discourage growth of fouling organisms. As part of the Proposed Project, NNMREC would incorporate state-of-the-art, low toxicity coatings appropriate for the Pacific Northwest environment into the final design of the instrumentation buoy, but this may not be the case on the WEC devices, which are anticipated to have a substantially larger wetted surface area than the instrumentation buoys.

The rate of leaching from antifouling paint into the environment is not consistent over time. Newly painted structures display the highest leaching rates that can be up to seven times greater than long-term release rates (Valkirs et al. 2003 cited in Reedsport OPT Wave Park 2010). After 2 months, copper release rates stabilize to a low consistent emission. The rate and level that copper releases into the environment is contingent upon several factors, including the movement of the structure, total surface area, and thickness of the paint (Castritsi-Catharios et al. 2007; Valkirs et al. 2003, both as cited in Reedsport OPT Wave Park 2010). Structures experiencing little movement or change in depth, as would be the case with the instrumentation buoy and WEC devices (in comparison to moving ships), show the lowest release rates (Valkirs et al. 2003, as cited in Reedsport OPT Wave Park 2010).

While antifouling paint is toxic to a variety of aquatic organisms, the impact on water quality from the antifouling paint is expected to be negligible due to the extremely high dilution factor provided by the location in a high wave energy open ocean. The solubility of copper in sea water, wave and current activity in the action area, depth of water, and sandy bottom sediment in the vicinity of the action area minimize the likelihood of any antifouling paint contaminants being deposited on the sea floor and reentering the water column as a result of project installation or operation. The action area's location in the open Pacific Ocean further reduces the likelihood of installation or operation-

related water quality impacts from the instrumentation buoy or vessel, WEC devices, and associated mooring system. In consideration of these factors, antifouling paints used on Proposed Project structures would have an insignificant effect on marbled murrelets and their prey.

6.1.1.4 Exposure to Electromagnetic Fields

Marbled murrelets swimming or diving near the instrumentation buoy, vessel, WEC devices, or the connecting umbilical cable would be exposed to EMFs. The magnitude of such potential impacts would depend on the intensity of EMFs generated by these devices, and on the sensitivity of organisms to EMFs. Although anticipated EMFs from power cables can be readily modeled and it is understood that many species exhibit sensitivity to EMF, information that enables a quantifiable impact analysis is limited and the consequences at the individual, population, or system level have not yet been addressed (Normandeau et al. 2011). Actual power generation levels for this test facility are expected to be low, not exceeding a 30 kW generating capacity. The power cable connecting the instrumentation buoy or vessel and WEC device would have at least one layer of shielding. Because EMF effects attenuate rapidly with distance from a source, any impacts are expected to be confined to the action area, and largely to the project infrastructure. For example, Gill et al. (2009) reported that EMF transmissions could be detected by various marine fish, shark, and ray species up to 295 meters (968 feet) from a cable. Cable shielding, direct current versus alternating current power transmission, and burial have been reported to reduce exposure levels and apparent detection by fish and sharks (U.S. Department of Energy 2009).

Fish in the vicinity of the project infrastructure may also experience EMF effects, such as disorientation and reduced foraging efficiency (Gill et al. 2009), behavior that could attract predators such as murrelets and marine mammals. The magnitude of this effect would vary between fish species. Some shark and ray species, such as catsharks and thornback rays, have been reported to show more activity and attraction to EMF transmission (Gill et al. 2009). However, Normandeau et al. (2011) reported that data gaps in the fundamental biology of marine species and in the specific question of response to anthropogenic EMF make conclusions about potential impacts highly speculative.

Use of shielded cable is expected to reduce some of the effects of EMF on fish. The small size of the project infrastructure and the relatively low power transmission levels transmitted by the vessel and WEC device are also expected to produce low levels of EMF transmissions. However, measurement of EMF transmission by project components to support physical and environmental studies would be part of the Proposed Project. If it is determined that EMF field strength has reached the known threshold for sensitive species, NNMREC would determine the need for additional monitoring and mitigation using an adaptive management approach. Additional actions, such as improved shielding of electrical devices and cables, would be taken as necessary.

Sea turtles, marine mammals, and diving seabirds are not known to be strongly sensitive to EMF transmissions (U.S. Department of Energy 2009). As a consequence, EMF transmissions originating from the Proposed Project would not be expected to result in significant impacts on such animals. However, any future scientific research on the EMF threshold of sea turtles and diving seabirds will be considered during implementation of the Proposed Project. If it is determined that the Proposed Project creates EMF transmissions above these threshold levels, monitoring and mitigation measures would be implemented to reduce EMF levels. Additional actions, such as improved shielding of electrical devices and cables, would be taken as necessary.

6.1.1.5 Exposure to Underwater Sound

Underwater sound and vibration is defined as oscillating pressure fluctuations generated by mechanical disturbances near the source. Underwater sound is quantified by units of decibels (dB). These disturbances can be caused in the water (e.g., by vessel propellers) or they can be transmitted through the casing of enclosed WEC devices. Time-varying underwater sound levels are generally quantified using several statistical metrics:

- The peak sound level is the maximum instantaneous sound level during the measurement period.
- The root-mean-square sound pressure level is the average sound level during the measurement period or a designated shorter interval.
- The sound exposure level is the measure of the cumulative sound energy during the measurement period (or a designated shorter period), which takes into account the sound intensity and duration.

The assessment of underwater sound and vibration impacts draws from a sound impact analysis from one representative technology, the OPT PowerBuoy® point absorber WEC device. This device is similar in design to those that are anticipated to be tested as part of the Proposed Project and the installation and mooring of the instrumentation buoy and WEC devices under test would be similar to that of the PowerBuoy®. Therefore, underwater sound impacts for the instrumentation buoy and WEC devices reasonably expected to be included in the Proposed Project are expected to be similar.

Installation

Although sound sources would include installation of anchors and anchor cables for the WEC devices and the instrumentation buoy, the predominant source of sound during project installation of the instrumentation buoy and WEC devices would originate from the propellers of support vessels involved in transport and placement. Installation of the anchoring and mooring system for the Proposed Project would not involve any pile driving or drilling. These activities are often the loudest sound sources during marine construction.

The environmental assessment for the proposed Reedsport OPT project included an analysis of sound impacts from installation of the PowerBuoy® device (Reedsport OPT Wave Park 2010). OPT predicted that the peak underwater sound intensity, generated by tugs, barges, and diesel-powered vessels (representative for project installation) fully underway, would be no greater than 130 to 160 dB at 1 meter (3.3 feet) over a frequency range of 20 hertz to 10 kilohertz. The vessel would only be fully underway when traveling to and from the project site. Also, these peak sound levels would only occur during vessel starts and stops during installation activities. OPT projected that the sound intensity would be much lower for most of the project installation. Sound impacts from the Proposed Project would be expected to be commensurate with the levels anticipated by OPT.

The sound analysis for the Reedsport OPT project concluded that during project installation, the above-water sounds from the support vessels and equipment would not be transmitted into the water at a higher level than the natural environmental sound from wind and wave action. As the lead agency for that analysis, the Federal Energy Regulatory Commission concluded that such above-water sounds would be largely damped by ambient ocean sound on all but the calmest of days. Because of the similarities between the Reedsport site and the action area for this Proposed Project, this conclusion is expected to apply to the Proposed Project.

Furthermore, it was determined that while the sound associated with the installation activities of the Reedsport OPT project could temporarily cause avoidance and alter feeding patterns for certain marine species, any impacts would be brief and of negligible magnitude. The Proposed Project would be located approximately 113 kilometers (70 miles) north of the proposed Reedsport OPT site and would include habitat and species expected to be found in the Reedsport OPT site. Additionally, the Proposed Project would include installation of up to two structures (the instrumentation buoy and a WEC device), as compared to the 10-buoy array proposed by OPT. Therefore, the resulting sound levels anticipated from the installation and maintenance of the Proposed Project would be lower than those for the Reedsport OPT project and would be expected to cause less avoidance and feeding pattern alteration behaviors by marine life.

Operation

During operation, sound from the WEC devices' impellors, gearbox, generator, or other moving components (all of which would be contained inside of the device) would be radiated into the surrounding water. In addition, cable strumming sound can be generated by waves or currents passing by anchor cables and submarine power cables. The magnitude of underwater sound generated by the operation of each WEC device would vary depending on the specific device being tested at any given time. Such sounds would be nearly continuous, but might vary depending on the amount of electricity being generated or mechanical motion at any given time.

Although no definitive measurements of sound levels associated with the operation of hydrokinetic and ocean energy devices have yet been published (U.S. Department of Energy 2009), the OPT Reedsport project EA includes an analysis of sound impacts potentially resulting during the operations phase of the PowerBuoy®. During project operation, OPT expects the underwater sound from the PowerBuoy® system to primarily originate from waves affecting the float portion of the PowerBuoy® and movement of internal mechanical components. However, because the waves affecting the float occur at the surface, coupling into the water would be weak. According to the Minerals Management Service (since reorganized as the Bureau of Ocean Energy Management, Regulation, and Enforcement), "[o]nce installed, wave energy technologies would produce low-intensity, broadband sound of a repetitive continuous nature, similar in character to noise from ship operations" (Minerals Management Service 2007, cited in Reedsport OPT Wave Park 2010). Previous research reports that "…noise from wave power plant machinery will generally increase in proportion to the ambient background noise associated with surface wave conditions, thus tending to minimize its noticeable effect" (Electric Power Research Institute 2004, cited in Reedsport OPT Wave Park 2010). The instrumentation buoy and WEC devices deployed as part of the Proposed Project would also generate operational sound as a result of the contact of waves with the float portion of the WEC devices and the hull of the instrumentation buoy. The conclusions of the Bureau of Ocean Energy Management, Regulation, and Enforcement and Electric Power Research Institute would apply similarly to the Proposed Project.

Like the PowerBuoy®, the mooring system of the instrumentation buoy and WEC devices would be designed to remain under tension. Maintenance divers working underwater around PowerBuoys® deployed in Kaneohe Bay, Hawaii and in New Jersey have not noticed any audible sounds from the PowerBuoys® or mooring system (Reedsport OPT Wave Park 2010). However, divers working underwater would not be expected to detect frequencies below about 35 Hz.

OPT expects the sound levels generated by the PowerBuoy® to be close to ambient ocean sound levels and much less than 130 to 160 dB (reference: 1 micropascal), which is the sound level

expected for representative project installation and maintenance vessels fully underway. Consequently, operation of the Reedsport OPT project is not expected to result in sound at levels that would negatively affect fish, marine mammals, or other marine life in the area (Reedsport OPT Wave Park 2010). Because of the technical and site similarities and the fact that fewer buoys and mooring lines would be used, the sound levels anticipated to result from the operation of the Proposed Project would be even lower, and would not result in sound levels that would negatively affect marine life in the action area for this Proposed Project.

As part of the Proposed Project, NNMREC would deploy monitoring equipment, including equipment to measure and record underwater sound generated by the instrumentation buoy or vessel and WEC device under test. The sound levels generated by the operation of the Proposed Project would be measured against the ambient sound data that are currently being collected. Underwater sound would continue to be monitored during the deployment of the Proposed Project and would be compared against acoustic thresholds documented in scientific literature. It is anticipated that the sound levels generated during normal operation of a WEC device would be lower than the sound levels generated by support vessels during installation of the instrumentation buoy and installation of each new WEC device. While under anchor, the vessel may generate low noise levels by running the electric generators, or the engine to power the hydraulic systems; however this level of noise is anticipated to be negligible. Therefore, because background sound levels are believed to be high, it is anticipated that the Proposed Project would result in negligible sound or vibration impacts during operation. If recorded sound levels are measured to be above the anticipated levels, this may be indicative of a malfunction or damage to the instrumentation buoy or WEC device. If such a scenario occurs, NNMREC or the WEC device developer would reduce sound impacts by correcting or repairing the equipment in question at the earliest feasible opportunity. If measured sound levels resulting from normal operation are higher than anticipated and above acceptable thresholds, NNMREC would develop and implement mitigation to reduce acoustic emissions to acceptable levels. This may include placing WEC devices in a “lock-down” mode if sound levels exceeding thresholds were discovered during a test period.

Maintenance, Removal, and Decommissioning

Sound and vibration during maintenance of the instrumentation buoy and WEC device would be generated chiefly by support vessels traveling to and from the onshore support docks, as described above for installation. These activities are expected to cause negligible sound levels.

Removal and decommissioning of the test site would also generate sound levels similar to installation under most circumstances. However, it may be possible that plate and pile anchors—if used—could be removed by cutting them off level to the sea floor using underwater acetylene torches. This activity would result in a low level of noise. The Proposed Project is expected to cause negligible sound or vibration impacts during this phase.

Effects on Marbled Murrelets

As noted above, the loudest sound likely to be generated by the Proposed Project, operation of support vessels during instrumentation buoy, and WEC device installation would be no greater than 130 to 160 dB at 1 meter (3.3 feet) over a frequency range of 20 hertz to 10 kilohertz. Assuming that underwater sound attenuates in accordance with the practical spreading model used by NMFS and other agencies to assess sound impacts to Pacific salmon, peak sound levels would be no more than 142 dB at 16 meters (52 feet) from the support vessels, or 120 dB at 500 meters (1,640 feet) from

the support vessels; at that distance, vessel sound would likely be indistinguishable from the acoustic background.

These sound levels are far below levels that have been shown to affect health or behavior of fish. Startle responses in steelhead trout and salmon have been documented to occur at sound levels from 130 to 150 dB at a frequency of 100 hertz (San Luis and Delta-Mendota Water Authority and Hanson 1996) and for Pacific herring from 180 to 186 dB (Dalen and Knutsen 1987). Avoidance behavior by both salmon and steelhead trout has been reported to occur with continuous 166 dB sounds at a frequency of 100 hertz (Loeffelman et al. 1991). Although the noise levels generated during decommissioning could be higher if anchors were cut at the base, the use of underwater acetylene torches is anticipated to generate low noise levels. Consequently, anticipated sound levels would have no impacts on fish, and thus would not be expected to affect murrelet foraging opportunities in the action area.

The response of diving seabirds to underwater sound has been studied in varying contexts, reviewed in some detail by Teachout (2010). Although the publication focuses on the effects of pile driving sound on diving marbled murrelets, it also identifies prior studies of underwater sound effects on cormorants, ducks, penguins, and other diving birds. In no case have sound levels of the intensity that would be produced by support vessels for the Proposed Project (about 160 dB) been observed to cause health or behavioral impacts on diving birds. Noise levels generated by the possibly cutting of anchors using acetylene torches would result in low noise levels. Accordingly, sound levels generated by the Proposed Project would not be expected to affect health or behavior of either marbled murrelets or their prey.

6.1.2 Western Snowy Plover

Normal activities planned for deployment and operation of the Proposed Project would not occur in proximity to any snowy plover habitat. There is no snowy plover designated critical habitat within 64 kilometers (40 miles) of the action area. However, the action area is in Recovery Unit 1, which includes coastal Washington and Oregon. There are 17 areas designated for conservation management of snowy plover on the Oregon coast; all but area OR-7 at South Beach, just south of Newport, are at least 64 kilometers (40 miles) from the action area. OR-7 is an 18-hectare site covering 3.2 kilometers (2 miles) of coastline extending south from the Yaquina Bay south jetty. Neither breeding nor overwintering has yet been recorded at OR-7 (U.S. Fish and Wildlife Service 2007c: Appendix A). In the event of an emergency, such as if the instrumentation buoy or WEC were to come free of its moorings or if a spill of contaminants (such as hydraulic fluid) were to occur, prevailing winds and currents would convey the impact to the shoreline north and east of the action area, 4.8 to 16 kilometers (3 to 10 miles) north of Yaquina Bay, in an area not known to be used by snowy plovers. Responses to such an emergency would be detailed in the salvage plans for the instrumentation buoy and WEC device, which will be completed prior to testing and will be developed in coordination with the Oregon Parks and Recreation Department and the Oregon Department of State Lands. Additionally, monitoring personnel would follow notification procedures in the event of an instrumentation buoy system failure. In particular, the procedures would address major or cataclysmic events affecting the system that require notification of emergency or safety services, including the U.S. Coast Guard, local emergency responders, law enforcement, or emergency response agencies.

6.1.3 Short-Tailed Albatross

Short-tailed albatross spend most of their time at sea on foraging grounds associated with continental shelf-break areas with water depths of 200 to 1,000 meters (656 to 3,281 feet) (U.S. Fish and Wildlife Service 2008), and thus, are typically encountered well offshore over waters deeper than any found in the action area. There are fewer than ten reported observations of the species off the Oregon coast, with none closer than 32 kilometers (20 miles) offshore (Nehls 2003). Thus, they are not expected to occur in the action area. Any albatross that did enter the action area would likely overfly the area and would not be exposed to any potential impacts related to the Proposed Project.

6.1.4 Chinook Salmon, Lower Columbia River ESU

Chinook salmon could be affected by the following mechanisms:

- Underwater sounds associated with installation, operation, maintenance, and decommissioning of project components.
- Accidental spills of hydraulic fluid, transformer fluid, diesel fuel, or other materials used in operation and maintenance of project components or equipment used during installation, operation, maintenance, or decommissioning.
- Altered foraging or predation risk associated with other biological effects of project components.
- Exposure to EMFs.

6.1.4.1 Exposure to Underwater Sound

As detailed above in the analysis for marbled murrelets, project components would not generate underwater sound at levels that have been implicated in either behavioral or physical effects on fishes. If anchors were cut at the base, acetylene torches would be used, resulting in low noise levels. Thus, no effects associated with underwater sound are expected.

6.1.4.2 Exposure to Accidental Spills

As detailed above in the analysis for marbled murrelets, accidental spills would involve small volumes of materials having low (vegetable-based oils) to intermediate (hydraulic fluid, petroleum distillates) toxicities, and NNMREC would have plans in place to respond to spill incidents. The facility would be located more than 1.6 kilometers (1 nautical mile) offshore in water depths of more than 30.5 meters (100 feet); thus, there is low likelihood that juvenile Chinook foraging in the nearshore environment would be exposed to accidental spills, and any spills that did move ashore would be highly diluted by the time they entered the nearshore environment. Similarly, adult salmon would not likely be in the vicinity if a spill were to occur, based on a simple probabilistic model: the project components would not be sited in a location known to be preferentially used by adult salmon, and occupy a very small portion of the available habitat. Thus, any exposure would likely occur relatively distant from the spill, and the spilled materials would be highly diluted. Accordingly, the potential effects on Chinook salmon resulting from accidental material spills would be negligible.

6.1.4.3 Exposure to Structures

The project components would create in-water structure in an area that currently has no such structure. Some project components (instrumentation buoy, vessel, WEC device, waverider buoy, and mooring system floats) would be treated with antifouling coatings, but the mooring lines and anchors would not be treated, and would be colonized by macroalgae and sessile invertebrates such as anemones and sponges. The instrumentation buoy and WEC device anchors are designed to sit on top of or embed within bottom sediments, but growth of aquatic organisms can be expected on any exposed portions of the anchors. The vessel would deploy anchors for up to 10 days per test. This period of time may be too short for extensive colonization by marine organisms. The WEC anchor design is currently unspecified and anchors may be subject to extensive growth of marine organisms.

In-water structures such as docks and floats, and by implication, structures such as are proposed here, can represent attractive sources of cover and refuge for fishes. This is especially true of hard substrate having a vertical orientation (U.S. Army Corps of Engineers 2004), as many marine areas have comparably little structure associated with the seabed. Nelson (2003) called such in-water structures fish aggregation devices and found that fish assemblages associated with well-developed fouling communities were larger and more species-rich than assemblages devoid of a fouling community.

It is likely that the in-water structure represented by the project components would attract fish, and perhaps seabirds and marine mammals, which would forage in the area. As noted above, any Chinook salmon in the area would likely be adults. They may forage in the area, and they may be subject to a slightly increased risk of predation if marine mammals large and swift enough to forage on adult Chinook (primarily, dolphins and porpoises) are present in the area. In the absence of data on this potential impact, it does not present a substantial cause for concern. Analogous natural structures, such as sea stacks and large floating logs, also occur in shallow continental shelf areas of the Pacific Northwest coast, and are not regarded as presenting a threat to salmon.

It is also possible that physical components of the Proposed Project, including the instrumentation buoy, WEC device, mooring floats, anchors, and vessels used in component deployment, maintenance, and recovery could act as vectors for the transport or introduction of invasive marine species. This is unlikely to occur using the vessels because they will be locally sourced vessels operating out of Newport or other Oregon coast locations. The instrumentation buoy would also be locally constructed and deployed, and would remain in Newport when not deployed. The WEC devices, however, may be transported considerable distances.

Accordingly, any project component that has been previously deployed in waters other than along the Oregon coast or the Columbia River would be transported dry to the site (i.e., by a method other than towing, such as truck or barge transportation) and would be thoroughly inspected for evidence of any organisms or biological residues. Such organisms would be cleaned from the device in an upland location prior to deployment in Oregon coastal waters.

6.1.4.4 Exposure to Electromagnetic Fields

EMFs have two primary components: an electric field and a magnetic field. The motion of conductors through the magnetic field produces a secondary, induced electric field. EMFs would presumably be produced only during the operational phase of the Proposed Project.

The planet Earth has positive and negative magnetic poles, and is surrounded by a magnetic field that reaches thousands of kilometers into space. The ambient strength of this magnetic field in the northeast Pacific Ocean is approximately 50 microTeslas. Seawater is an electrolyte. Its motion via currents through Earth's magnetic field causes induction of a weak electric field, with higher current speeds inducing stronger electric fields. The ambient levels of the strength of this induced electric field in the northern California Current are on the order of tens of microVolts per meter (McMurray 2010).

Marine organisms live in an EMF environment subject to natural variation of magnetic fields (e.g., microTeslas), and of electrical fields (e.g., microVolts per meter). Marine animals known or suspected to be sensitive to EMFs include Dungeness crab, sea turtles, green sturgeon, elasmobranchs (sharks, rays, and skates), salmon, and tunas. Animals are thought to use their sense of electric or magnetic fields for orientation, navigation, and prey location. Laboratory studies have directly demonstrated electric field sensitivity in elasmobranchs, whereas sea turtles, salmon and tuna are suspected to be sensitive to magnetic fields based either on the presence of magnetite in the brain (e.g., salmonids) or on their observed navigational abilities and behaviors (McMurray 2010).

Measurements of EMF in the vicinity of an armored underwater cable found a magnetic field strength of 1 microTesla at a distance of 1 meter when the cable was carrying a 35 ampere current. At a distance of 10 meters (33 feet), the field strength had fallen to 0.3 microTesla, and 0.1 microTesla at 30 meters (98 feet) (U.S. Department of Energy 2009). Thus, the magnetic field strength was never stronger than 2% of Earth's magnetic field strength. Such a weak field is unlikely to materially alter a salmon's responses to Earth's magnetic field.

As detailed above in the analysis for marbled murrelets, fish in the vicinity of the project infrastructure may experience EMF effects. These effects would be minimized by the use of shielding on electrical cables, and moreover would be relatively small because low currents would be generated by this electrical facility and the cable runs between project components would be short (91 meters [300 feet] maximum). The potential effects of EMF on salmon were examined in environmental documentation prepared for the proposed Reedsport wave farm (Reedsport OPT Wave Park 2010). The wave farm would deploy the OPT PowerBuoy® point absorber WEC, which is similar in design to those that are anticipated to be tested as part of the Proposed Project.

The Reedsport analysis noted that salmon use several mechanisms for navigation, including orienting to Earth's magnetic field, using a celestial compass (sun and moon), and using the odor of their natal stream to migrate back to their original spawning grounds (Groot and Margolis 1998; Quinn et al. 1981). Crystals of magnetite have been found in four species of Pacific salmon, though not in sockeye salmon (Mann et al. 1988; Walker et al. 1988, both cited in Reedsport OPT Wave Park 2010). These magnetite crystals are believed to serve as a compass that orients to Earth's magnetic field. Yano et al. (1997, cited in Reedsport OPT Wave Park 2010) investigated the effects of artificial magnetic fields on oceanic migrating chum salmon. In this study, chum salmon were fitted with a tag that generated an artificial magnetic field around the head of the fish. There was no observable effect on the horizontal and vertical movements of the salmon when the tag's magnetic field was altered. Quinn and Brannon (1982) further conclude that while salmon can apparently detect magnetic fields, their behavior is likely governed by multiple stimuli as demonstrated by the ineffectiveness of artificial magnetic field stimuli. Similar results were also found in studies conducted on Atlantic salmon, and the Scottish Executive (2007) has concluded from this that

navigation and migration of Atlantic salmon would not be affected by the magnetic field produced by an underwater cable.

DOE (2009) has noted that "selecting the proper location for the power project is likely to be the most reliable and cost-effective way to minimize the potential effects of EMF. Avoidance of critical migratory paths and ensuring that the electrical transmission cables do not create a physical or electromagnetic barrier to animal movements may obviate the need for additional shielding or cable repairs." The Proposed Project, being located out of near nearshore environment and not grid-connected, would have only a single, short electrical transmission cable and would not have the potential to create a migration barrier. Based on low amplitude of likely EMF signals and the spatial isolation of the project from sensitive habitats and migration routes, the Proposed Project has negligible potential to affect Chinook salmon by generating EMF fields.

6.1.5 Chinook Salmon, Upper Willamette River ESU

Potential effects on any upper Willamette River Chinook salmon present in the action area would be substantially identical to those described above for the lower Columbia River Chinook salmon ESU. However, southerly migration of this ESU has not been documented, and the ESU is not expected to occur in the action area.

6.1.6 Chinook Salmon, Upper Columbia River Spring-Run ESU

Potential effects on any upper Columbia River spring-run Chinook salmon present in the action area would be substantially identical to those described above for the lower Columbia River Chinook salmon ESU.

6.1.7 Chinook Salmon, Snake River Spring/Summer-Run ESU

Potential effects on any Snake River spring/summer-run Chinook salmon present in the action area would be substantially identical to those described above for the lower Columbia River Chinook salmon ESU.

6.1.8 Chinook Salmon, Snake River Fall-Run ESU

Potential effects on any upper Snake River fall-run Chinook salmon present in the action area would be substantially identical to those described above for the lower Columbia River Chinook salmon ESU.

6.1.9 Coho Salmon, Southern Oregon/Northern California Coast ESU

Potential effects on any Southern Oregon/Northern California coast coho salmon present in the action area would be substantially identical to those described above for the lower Columbia River Chinook salmon ESU. Coho salmon of this ESU are likely to occur in the action area. During the summer months, juvenile coho salmon may occur throughout the action area (Brodeur et al. 2004). Based on analysis of 1.77 million tagged recoveries from Alaska to California, Weitkamp and Neely (2002) found that adult Southern Oregon/Northern California coast coho salmon are widely

dispersed in the coastal ocean, and it is thus, likely that adult coho salmon occur in the action area throughout the year.

6.1.10 Coho Salmon, Oregon Coast ESU

Potential effects on any upper Oregon coast coho salmon present in the action area would be substantially identical to those described above for the lower Columbia River Chinook salmon ESU. Oregon coast coho salmon migrate up the Yaquina River and other nearby coastal drainages to spawn, and are likely the most common wild salmon in the action area. Based on the data of Brodeur et al. (2004), juvenile coho salmon could occur in the action area from June to August or later. Adults would likely appear in the action area shortly before their migration into Yaquina Bay, in late summer to fall.

6.1.11 Coho Salmon, Lower Columbia River ESU

Potential effects on any lower Columbia River coho salmon present in the action area would be substantially identical to those described above for the lower Columbia River Chinook salmon ESU.

6.1.12 Green Sturgeon, Southern DPS

Until recently, little was known about the behavior of green sturgeon while in their oceanic habitat, but a recent study that involved acoustic tag detections of 213 adult green sturgeon has revealed that they make extensive, rapid, long-distance migrations along the continental shelf from California to Alaska (Lindley et al. 2008). The study by Lindley et al. (2008) used underwater hydrophone arrays to detect acoustically tagged migrant sturgeon at five locations between San Francisco Bay and the Gulf of Alaska; one of these locations, Seal Rock, is near the action area (about 18 kilometers [11 miles] to the south). Migrant sturgeon were detected at Seal Rock from August 2004 to July 2005, suggesting that they are likely present in the action area throughout the year; detections were at the highest rates from November to March, which is consistent with a hypothesis that sturgeon, which typically leave their freshwater habitat in the late fall, migrate to important foraging grounds off Alaska. The fish detected at Seal Rock had been tagged from the Klamath River and Sacramento River populations, and thus, represented a mixture of northern and southern DPS fish. The Seal Rock detections represented fish migrating at average speeds (calculated by their transit time to hydrophone stations farther north and south) of 2 to 23.7 kilometers per day (Lindley et al. 2008).

Potential effects on any southern DPS green sturgeon present in the action area would be substantially identical to those described above for the lower Columbia River Chinook salmon ESU, except that the green sturgeon differ from the salmonids in their use of oceanic habitat and in their sensitivity to EMF. The use of oceanic habitat, summarized in the preceding paragraph, leads to a conclusion that green sturgeon are likely to be found in the action area throughout the year, and are likely to be migrating over and foraging on benthic habitats in the waters proposed for facility siting. As such, they could encounter the mooring system, but would not be in close proximity to the power cable, if it were suspended beneath the surface. The mere physical presence of these structures would unlikely have any effect on the sturgeon, which might forage around these structures but would not be at risk of injury or entanglement.

Like elasmobranchs, sturgeons are weakly electric fish that can use electroreceptor senses, as well as others, to locate prey. In the one report related to Sterlet sturgeon (*Acipenser ruthenus*) and Russian sturgeon (*A. gueldenstaedtii*) behavior in the presence of electric fields, Basov (1999, cited

in Reedsport OPT Wave Park 2010) found varying behavior at different electric field frequencies and intensities, with investigative behavior at low field strengths, changing to avoidance behavior at field strengths of more than 0.6 milliVolts per centimeter (50 hertz alternating current from overwater transmission lines). Although the instrumentation buoy, WEC device, and umbilical cable would be shielded, it is possible that green sturgeon could detect EMF associated with these devices, particularly the cable, if they approached within a distance of less than about 10 meters (33 feet). Sturgeon could respond by investigating the source of the EMF. However, the EMF would not harm the sturgeon, and because the devices would be located at an isolated location on the continental shelf and the power cable would be short 100 meters (328 feet), the EMF stimuli would not act as a barrier to sturgeon migratory movements.

6.1.13 Eulachon, Southern DPS

Potential effects on any eulachon present in the action area would be expected to be very similar to those described above for the lower Columbia River Chinook salmon ESU. The risk that eulachon would be exposed to such impacts is uncertain. Very little is known of the water depths, distance from shore, timing, and other circumstances surrounding eulachon migrations at sea, so it is not possible to predict if migratory eulachon would pass through the action area. In consideration of this uncertainty, it is assumed that they do. However, although the Yaquina River supported a eulachon run as recently as 1991 (Willson et al. 2006), the nearest remaining eulachon run is a small, irregular run in Tenmile Creek, about 121 kilometers (75 miles) south of the action area. Only three runs (Mad River, Redwood Creek, and Klamath River) are still reported from farther south, and of these, only the Klamath River run occurs regularly (National Marine Fisheries Service Biological Review Team 2008). Accordingly it is doubtful that eulachon rely heavily on habitat in the action area or remain there for long during their migrations. This inference is supported by the absence of any reported commercial catches of eulachon in fisheries operated out of Newport (Oregon Department of Fish and Wildlife 2009).

Nonetheless, there is a risk that any eulachon in the action area would be exposed to the following risks:

- underwater sounds associated with installation, operation, maintenance, and decommissioning of project components;
- accidental spills of hydraulic fluid, transformer fluid, or other materials used in operation and maintenance of project components or equipment used during installation, operation, maintenance, or decommissioning;
- altered foraging or predation associated with other biological effects of project components; and
- EMFs.

The potential effects of these mechanisms are detailed above in the analysis of effects on the lower Columbia River Chinook salmon ESU. As that analysis shows, the risks are very low and their potential effects would be negligible.

6.1.14 Leatherback Sea Turtle

As with the other aquatic animals discussed above, leatherback sea turtles would potentially be exposed to underwater sound, accidental material spills, and EMFs. The risks associated with exposure to these impact mechanisms are substantially the same as described above for the marbled

murrelet and the lower Columbia River Chinook salmon ESU and are negligible, for the same reasons as described above.

Recently, NMFS has proposed critical habitat designation for leatherback sea turtles that includes the action area. NMFS identified two PCEs essential for the conservation of leatherbacks in marine waters of the west coast: the occurrence of prey species of sufficient condition, distribution, diversity, and abundance to support individual as well as population growth, reproduction, and development; and migratory pathway conditions to allow for safe and timely passage and access to/from/within high use foraging areas (National Marine Fisheries Service 2009). The proposed listing identified eight groups of activities in general that may have the potential to affect the two PCEs: pollution from point sources, runoff from agricultural pesticide use, oil spills, power plants, aquaculture, desalination plants, tidal energy or wave energy projects, and liquefied natural gas projects (National Marine Fisheries Service 2009). The leatherback sea turtle forages almost exclusively upon jellyfish; in the action area, one of its primary prey species is the brown sea nettle (*Chrysaora fuscescens*) (National Marine Fisheries Service 2009). The proposed action has no potential to alter the condition, distribution, diversity, or abundance of this prey. It is likely that some marine organisms would grow on portions of the project infrastructure, such as mooring lines, that are not treated to prevent fouling; but this would be a minor biological effect that would not substantially alter habitat in the action area, and is not expected to produce any change in behaviors by leatherback sea turtles. The Proposed Project would have a small footprint, consisting at most of the instrumentation buoy or vessel, a WEC device, and the associated moorings, all of which would be more than 1.6 kilometers (1 nautical mile) offshore. Thus, the facility would not affect leatherback sea turtle migratory pathways.

6.1.15 Green Sea Turtle

Although observations of the green sea turtle have occurred in waters off the Oregon coast, their frequency of occurrence is low enough that the potential for effects is discountable. Therefore, the Proposed Project would have no effect on green sea turtles.

6.1.16 Loggerhead Sea Turtle

Although observations of the Loggerhead sea turtle have occurred in waters off the Oregon coast, their frequency of occurrence is low enough that the potential for effects is discountable. Therefore, the Proposed Project would have no effect on Loggerhead sea turtles.

6.1.17 Olive Ridley Turtle

Although observations of the olive Ridley sea turtle have occurred in waters off the Oregon coast, their frequency of occurrence is low enough that the potential for effects is discountable. Therefore, the Proposed Project would have no effect on olive Ridley sea turtles.

6.1.18 Steller Sea Lion, Eastern DPS

There is no Steller sea lion rookery near the action area; the closest, Orford Reef, is approximately 206 kilometers (128 miles) south of the action area. The closest pinniped haul-out known to be used by the Steller sea lion is at Seal Rock, 17.7 kilometers (11 miles) south of the project site (Oregon

Department of Fish and Wildlife 2008). Accordingly, the only Steller sea lions likely to occur in the action area would be animals in migration, which could swim, dive, or forage in the action area.

The potential vulnerability of Steller sea lions to material spills, underwater sound, and EMF is detailed above in the discussion of the marbled murrelet and lower Columbia River Chinook salmon ESU, and would be negligible, for the same reasons as described above. With regard to EMF, there is no evidence that Steller sea lions have the ability to detect EMF fields, and they would be unaffected by EMF.

Regarding underwater sound, as noted above in the discussion of marbled murrelets, there would be no percussive sounds (such as are produced by impact pile driving) and continuous sounds would only exceed 120 dB at 1 micropascal root-mean-squared at distances within 500 meters (1,640 feet) of the vessels used during project installation, maintenance, and decommissioning. To avoid impacts on Steller sea lions and other marine mammals, the master and pilot of each vessel would be charged with watching for any marine mammals and would avoid approaching within 183 meters (200 yards) of any marine mammal, in accordance with NMFS guidelines for boater activity near marine mammals (National Marine Fisheries Service 2008d; 76 FR 20870). Vessels would operate only during daylight hours in conditions allowing visibility of surface waters within no less than 183 meters (200 yards) of the vessel. If any marine mammal is detected, the vessel would alter course to maintain a distance of no less than 183 meters (200 yards) from the marine mammal.

If plate or pile anchors were used to moor the WEC devices or the instrumentation buoy, these could be cut off at the base level with the sea floor during decommissioning. If anchors were cut, acetylene torches would be used, generating low noise levels. Therefore, noise generated by the possible cutting of anchors during decommissioning is expected to result in no effect on marine mammals such as the eastern DPS of the Steller sea lion.

Pinnipeds would likely be attracted to the project infrastructure. Moored in-water structures often attract congregations of fish, and thus, constitute a potential foraging area. Use of the instrumentation buoy and WEC device as haul-outs would be prevented by the inclusion of passive deterrents in the design of these structures, subject to NMFS approval. The instrumentation buoy would include rails and nylon mesh barriers that have proven successful in preventing mammal haul-out on similar hull designs. Because of the high freeboards and hull profile, a pinniped haul-out would not be possible on the vessel.

6.1.19 Killer Whale, Southern Resident DPS

The Proposed Project has the potential to affect whales by the mechanisms of underwater sound and entanglement. Potential impacts associated with underwater sound would be negligible and are detailed above in the discussion of the lower Columbia River Chinook salmon ESU and Steller sea lion, eastern DPS. Whales could likely detect underwater sound associated with the Proposed Project, but the potential magnitude of such an exposure would be limited via compliance with the conservation measure to maintain distance from marine mammals during vessel operations, as described above. In the context of this precaution, any potential effects on whales via exposure to underwater sound would be negligible.

Entanglement is an extremely unlikely risk. The Proposed Project has a limited number of mooring lines and a small footprint. The lines, except where they meet at the instrumentation buoy and WEC, are spaced well apart (relative to the length of a whale). If deployed, the testing vessel would anchor

with one or two mooring lines. Accordingly, the risk of a whale becoming entangled in a mooring line would be discountably low.

6.1.20 Humpback Whale

Potential effects on humpback whales would be the same as described above for Southern Resident killer whales.

6.1.21 Blue Whale

Potential effects on blue whales would be the same as described above for humpback whales. Compared to humpback whales, blue whales are much less numerous in these waters, and are very unlikely to come as close to the shore as the action area; thus, risks are lower for blue than for humpback whales.

6.1.22 Fin Whale

Potential effects on fin whales would be the same as described above for humpback whale. Compared to humpback whales, fin whales are much less numerous in these waters, and are very unlikely to come as close to the shore as the action area; thus, risks are lower for fin than for humpback whales.

6.2 Indirect Effects

Indirect effects are effects caused by or resulting from the proposed action that are later in time and reasonably certain to occur. Effects associated with construction, operation, and decommissioning of the Proposed Project are treated here as direct effects because they would be supported with federal funding. No indirect effects for the proposed action have been identified.

6.3 Interrelated and Interdependent Effects

An *interrelated activity* is an activity that is part of or *associated with* the proposed action and depends on the proposed action for its justification. An interdependent activity is an activity that has no independent utility apart from the action under consultation; it occurs *because of* the proposed action.

The deployment, operation, and recovery of the instrumentation buoy or vessel and WEC devices are covered under the proposed action and are proposed to be covered by a single Department of the Army permit. No other federal permits are related to the proposed action.

The Proposed Project is a test facility and would not be connected to land by any electrical cable. Testing of any WEC at this facility would not constitute a requirement for subsequent commercial deployment of such a device. No other wave energy projects are related to the proposed action.

Chapter 7
Effects Determinations

The effects determinations are defined as follows:

- ***No effect***. The proposed action would have no effects on the listed species or designated critical habitat.
- ***May affect, but is not likely to adversely affect.*** Effects on the listed species would be insignificant or discountable. This determination would also apply to activities that have only a beneficial effect with no short- or long-term adverse effects.
- ***May affect, but is not likely to adversely modify.*** Effects on the designated critical habitat would be insignificant or discountable. This determination would also apply to activities that have only a beneficial effect with no short- or long-term adverse effects.
- ***Insignificant effect.*** This determination relates to the size of the effect and would describe only effects that do not result in take.
- ***Discountable effect.*** These effects are extremely unlikely to occur. Based on best judgment, it would not be possible to meaningfully measure, detect, or evaluate insignificant effects; nor would it be possible to expect discountable effects to occur.

7.1 Marbled Murrelet

The proposed action would result in an insignificant probability of incidental take for marbled murrelets, and thus, ***may affect, but is not likely to adversely affect*** this species. This determination is based on the following information, detailed in the effects analysis and here summarized:

- Murrelets may loaf or forage on or in marine waters in the action area.
- Murrelets are not at risk of entanglement or entrapment.
- For various reasons, all contaminant exposure risks would be negligible.
- EMF is not likely to affect murrelets, and although it could affect prey behavior to a very limited and local degree, would not affect prey availability.
- Underwater sound that would occur infrequently when deployment, recovery, or maintenance vessels were in the area would not attain levels high enough to affect murrelet behavior. Underwater noise that could be generated from the possible torch-cutting of anchors during decommissioning would be low and would not affect murrelet behavior beyond decommissioning.

The action area contains no designated critical habitat for the marbled murrelet, and the proposed action would have ***no effect*** on designated critical habitat for the marbled murrelet.

7.2 Western Snowy Plover

The proposed action would result in an insignificant and discountable probability of incidental take for western snowy plovers, and thus, ***may affect, but is not likely to adversely affect*** this species. This determination is based on the following information, detailed in the effects analysis and here summarized:

- The nearest area designated for conservation management of snowy plover is area OR-7 at South Beach, just south of Newport. This area lies near but outside of the action area.
- No areas within the action area are known to be used by western snowy plovers.

The action area contains no designated critical habitat for the western snowy plover, and the proposed action would have ***no effect*** on designated or proposed critical habitat for the western snowy plover.

7.3 Short-Tailed Albatross

The proposed action would result in an insignificant and discountable probability of incidental take for short-tailed albatross, and thus, ***may affect, but is not likely to adversely affect*** this species. This determination is based on the following information, detailed in the effects analysis and here summarized:

- No aspect of the proposed action would expose albatrosses to greater risks than those described for marbled murrelets.
- Because they are not diving birds, albatrosses would be at much reduced risk for entanglement and entrapment, contaminant exposure, EMF, and underwater sound.
- The action area is close to shore and represents a habitat rarely visited by albatrosses.

Critical habitat has not been designated for the short-tailed albatross.

7.4 Chinook Salmon, Lower Columbia River ESU

The proposed action would result in an insignificant and discountable probability of incidental take for Lower Columbia River Chinook salmon, and thus, ***may affect, but is not likely to adversely affect*** this species. This determination is based on the following information, detailed in the effects analysis and here summarized:

- For various reasons, all contaminant exposure risks are negligible.
- Although salmon are likely to perceive EMF at distances within a few meters of power cables, it is unlikely to cause a change in their movements, foraging activities, or other behaviors.
- Project components would not generate underwater sound at levels that have been implicated in either behavioral or physical effects on fishes.
- Project structures may act as fish aggregation devices and be used by salmon as cover or for foraging. This would not constitute a harmful effect.

The action area contains no designated critical habitat for the Lower Columbia River Chinook salmon, and the proposed action would have ***no effect*** on designated critical habitat for the Lower Columbia River Chinook salmon.

7.5 Chinook Salmon, Upper Willamette River ESU

The proposed action would result in an insignificant and discountable probability of incidental take for Upper Willamette River Chinook salmon, and thus, ***may affect, but is not likely to adversely affect*** this species. The rationale for this determination is the same as stated above for the lower Columbia River Chinook salmon.

The action area contains no designated critical habitat for the Upper Willamette River Chinook salmon, and the proposed action would have ***no effect*** on designated critical habitat for the Upper Willamette River Chinook salmon.

7.6 Chinook Salmon, Upper Columbia River Spring-Run ESU

The proposed action would result in an insignificant and discountable probability of incidental take for Upper Columbia River spring-run Chinook salmon, and thus, ***may affect, but is not likely to adversely affect*** this species. The rationale for this determination is the same as stated above for the lower Columbia River Chinook salmon.

The action area contains no designated critical habitat for the Upper Columbia River spring-run Chinook salmon, and the proposed action would have ***no effect*** on designated critical habitat for the Upper Columbia River spring-run Chinook salmon.

7.7 Chinook Salmon, Snake River Spring/Summer Run ESU

The proposed action would result in an insignificant and discountable probability of incidental take for Snake River spring/summer run Chinook salmon, and thus, ***may affect, but is not likely to adversely affect*** this species. The rationale for this determination is the same as stated above for the lower Columbia River Chinook salmon.

The action area contains no designated critical habitat of the Snake River spring/summer run Chinook salmon, and the proposed action would have ***no effect*** on designated critical habitat for the Snake River spring/summer run Chinook salmon.

7.8 Chinook Salmon, Snake River Fall-Run ESU

The proposed action would result in an insignificant and discountable probability of incidental take for Snake River fall-run Chinook salmon, and thus, ***may affect, but is not likely to adversely affect***

this species. The rationale for this determination is the same as stated above for the lower Columbia River Chinook salmon.

The action area contains no designated critical habitat for the Snake River fall-run Chinook salmon, and the proposed action would have ***no effect*** on designated critical habitat for the Snake River fall-run Chinook salmon.

7.9 Coho Salmon, Southern Oregon/Northern California Coast ESU

The proposed action would result in an insignificant probability of incidental take for Southern Oregon/Northern California coast coho salmon, and thus, ***may affect, but is not likely to adversely*** affect this species. The rationale for this determination is the same as stated above for the lower Columbia River Chinook salmon.

The action area contains no designated critical habitat for the Southern Oregon/Northern California coast coho salmon, and the proposed action would have ***no effect*** on designated critical habitat for the Southern Oregon/ Northern California coast coho salmon.

7.10 Coho Salmon, Oregon Coast ESU

The proposed action would result in an insignificant probability of incidental take for Oregon coast coho salmon, and thus, ***may affect, but is not likely to adversely affect*** this species. The rationale for this determination is the same as stated above for the lower Columbia River Chinook salmon.

Additionally, the proposed action ***may affect, but is not likely to adversely modify*** designated critical habitat of the Oregon coast coho salmon. PCEs potentially affected by the proposed action include those for estuarine, nearshore marine, and offshore marine areas. The PCE for estuarine areas would not be affected; the waters of Yaquina Bay would only be used for project component deployment and recovery, which would occur using existing marine facilities. Similarly, the nearshore marine environment would only be transited during project component deployment and recovery. Regarding all PCEs, the potential effects are detailed above and are shown to have insignificant or discountable potential for adverse modification.

7.11 Coho Salmon, Lower Columbia River ESU

The proposed action would result in an insignificant and discountable probability of incidental take for Lower Columbia River coho salmon, and thus, ***may affect, but is not likely to adversely affect*** this species. The rationale for this determination is the same as stated above for the Lower Columbia River Chinook salmon.

The action area contains no designated critical habitat of the Lower Columbia River coho salmon, and the proposed action would have ***no effect*** on designated critical habitat of the Lower Columbia River coho salmon.

7.12 Green Sturgeon, Southern DPS

The proposed action would result in an insignificant probability of incidental take for green sturgeon, and thus, ***may affect, but is not likely to adversely affect*** this species. This determination is based on the following information, detailed in the effects analysis and here summarized:

- For various reasons, all contaminant exposure risks are negligible.
- Although sturgeon might perceive EMF near power cable and perhaps near the instrumentation buoy or vessel and WEC device, their response is likely to be minor and short term, consisting of investigating the EMF source as a potential prey item. Because of the isolation of the facility (i.e., there are no EMF-generating cables running away from the site), EMF would not create a barrier to sturgeon movements.
- Project components would not generate underwater sound at levels that have been implicated in either behavioral or physical effects on fishes.
- Project structures, particularly mooring system elements, may act as fish aggregation devices, and be investigated by foraging sturgeon. This does not constitute a harmful effect.

Additionally, the proposed action ***may affect, but is not likely to adversely modify*** designated critical habitat of the green sturgeon. The proposed action has little potential to affect PCEs for estuarine habitat; the action area only includes Yaquina Bay because project components would be deployed from and returned to that site, and physical locations used in Yaquina Bay would all be associated with pre-existing marine service facilities. Regarding PCEs for coastal marine habitat, the potential effects on migratory corridor, water quality, and food resources are detailed above and are shown to have insignificant or discountable potential for adverse modification.

7.13 Eulachon, Southern DPS

The proposed action would result in an insignificant probability of incidental take for eulachon, and thus, ***may affect, but is not likely to adversely affect*** this species. This determination is based on the following information, detailed in the effects analysis and here summarized:

- For various reasons, all contaminant exposure risks are negligible.
- Although eulachon may perceive EMF at distances within a few meters of power cables, it is unlikely to cause a change in their movements, foraging activities, or other behaviors.
- Project components would not generate underwater sound at levels that have been implicated in either behavioral or physical effects on fishes.
- Project structures may act as fish aggregation devices and be used by eulachon as cover or for foraging. This does not constitute a harmful effect.

The action area contains no designated critical habitat of the southern DPS of eulachon and the proposed action would have ***no effect*** on designated critical habitat of the southern DPS eulachon.

7.14 Leatherback Sea Turtle, Eastern DPS

The proposed action would result in an insignificant probability of incidental take for leatherback sea turtles, and thus, ***may affect, but is not likely to adversely affect*** this species. This determination is based on the following information, detailed in the effects analysis and here summarized:

- For various reasons, all contaminant exposure risks are negligible.
- EMF is not likely to affect leatherback turtles, and although it could affect prey behavior to a very limited and local degree, it would not affect prey availability.
- Project components that would occur infrequently when deployment, recovery, or maintenance vessels were in the area would not generate underwater sound at levels that have been implicated in either behavioral or physical effects upon sea turtles.
- Underwater noise that could be generated from the possible cutting of anchors during decommissioning would not affect sea turtle behavior beyond decommissioning.

Additionally, the proposed action ***may affect, but is not likely to adversely modify*** proposed critical habitat of the leatherback turtle. Specifically, the proposed action has no potential to alter the two proposed PCEs of leatherback turtle critical habitat, foraging opportunities or migratory pathways.

7.15 Green Sea Turtle

The proposed action would result in an insignificant probability of incidental take for green sea turtles, and thus, ***may affect, but is not likely to adversely affect*** this species. This is due to the very low frequency of occurrence for this turtle in the action area.

The action area contains no designated critical habitat of the green sea turtle and the proposed action would have ***no effect*** on designated of the green sea turtle.

7.16 Loggerhead Sea Turtle

The proposed action would result in an insignificant probability of incidental take for loggerhead sea turtles, and thus, ***may affect, but is not likely to adversely affect*** this species. This is due to the very low frequency of occurrence for this turtle in the action area.

Critical habitat has not been designated for the loggerhead sea turtle.

7.17 Olive Ridley Sea Turtle

The proposed action would result in an insignificant probability of incidental take for olive Ridley sea turtles, and thus, ***may affect, but is not likely to adversely affect*** this species. This is due to the very low frequency of occurrence for this turtle in the action area.

Critical habitat has not been designated for the olive Ridley sea turtle.

7.18 Steller Sea Lion, Eastern DPS

The proposed action would result in an insignificant probability of incidental take for eastern Steller sea lions, and thus, ***may affect, but is not likely to adversely affect*** this species. This determination is based on the following information, detailed in the effects analysis and here summarized:

- Steller sea lions may forage while passing through marine waters in the action area, but no haul-outs or rookeries are located in or near the action area.
- Steller sea lions are not at risk of entanglement or entrapment.
- For various reasons, all contaminant exposure risks are negligible.
- EMF is not likely to affect Steller sea lions, and although it could affect prey behavior to a very limited and local degree, it would not affect prey availability.
- Underwater sound would occur infrequently (only when deployment, recovery, or maintenance vessels were in the area). Underwater sound levels would only be high enough to affect marine mammal behavior (120 dB at 1 micropascal root-mean-squared) within about 128 meters (420 feet) of operating vessels. To avoid such effects, a conservation measure (maintaining distance from marine mammals) is required.
- Noise generated from possible cutting of anchors during decommissioning is expected to result in no effect on the eastern DPS of the Steller sea lion.

The action area contains no designated critical habitat for the Steller sea lion, and the proposed action would have ***no effect*** on designated critical habitat of the Steller sea lion.

7.19 Killer Whale, Southern Resident DPS

The proposed action would result in an insignificant probability of incidental take for Southern Resident killer whales, and thus, ***may affect, but is not likely to adversely affect*** this species. This determination is based on the following information, detailed in the effects analysis and here summarized:

- Southern Resident killer whales may forage while passing through marine waters in the action area.
- Southern Resident killer whales are not at risk of entanglement or entrapment.
- For various reasons, all contaminant exposure risks are negligible.
- EMF is not likely to affect Southern Resident killer whales, and although it could affect prey behavior to a very limited and local degree, it would not affect prey availability.
- Underwater sound would occur infrequently (only when deployment, recovery, or maintenance vessels were in the area). Underwater sound levels would only be high enough to affect marine mammal behavior (120 dB at 1 micropascal root-mean-squared) within about 128 meters (420 feet) of operating vessels. To avoid such effects, a conservation measure (maintaining distance from marine mammals) is required.

- Underwater noise that could be generated from the possible cutting of anchors during decommissioning would not affect Southern Resident killer whale behavior beyond decommissioning.

The action area contains no designated critical habitat of the Southern Resident killer whale, and the proposed action would have ***no effect*** on designated critical habitat of the Southern Resident killer whale.

7.20 Humpback Whale

The proposed action would result in an insignificant and discountable probability of incidental take for humpback whales, and thus, ***may affect, but is not likely to adversely affect*** this species. The rationale for this determination is the same as stated above for the Southern Resident killer whale.

Critical habitat has not been designated for the humpback whale.

7.21 Blue Whale

The proposed action would result in an insignificant and discountable probability of incidental take for blue whales, and thus, ***may affect, but is not likely to adversely affect*** this species. The rationale for this determination is the same as stated above for the Southern Resident killer whale, with the added consideration that blue whales are very rarely observed this close to the shoreline.

Critical habitat has not been designated for the blue whale.

7.22 Fin Whale

The proposed action would result in an insignificant and discountable probability of incidental take for fin whales, and thus, ***may affect, but is not likely to adversely affect*** this species. The rationale for this determination is the same as stated above for the Southern Resident killer whale, with the added consideration that fin whales are very rarely observed this close to the shoreline.

Critical habitat has not been designated for the fin whale.

Chapter 8
Essential Fish Habitat Assessment

8.1 Regulatory Background

Originally established in 1976, the Magnuson-Stevens Act gave NMFS the authority to regulate the commercial harvest of fish and shellfish in the United States Exclusive Economic Zone. In 1996, the Magnuson-Stevens Act was reauthorized and amended to establish procedures designed to identify, conserve, and enhance EFH for species regulated under a federal fisheries management plan. Section 305(b)(2) requires all federal agencies to consult with NMFS on all actions or proposed actions to be authorized, funded, or undertaken by the agency that may adversely affect EFH.

EFH includes "those waters and substrate necessary to fish for spawning, breeding, feeding, or growth to maturity." The term *waters* refers to aquatic areas and their associated physical, chemical, and biological properties that are used by fish, and may include aquatic areas historically used by fish. The term *substrate* refers to sediment, hard-bottom, structures underlying the waters, and associated biological communities. The term *necessary* refers to the habitat required to support a sustainable fishery and the managed species' contribution to a healthy ecosystem. The expression *spawning, breeding, feeding, or growth to maturity* refers to a species' full life cycle (50 CFR 600.10). The term *adverse effect* refers to any impact that reduces quality and/or quantity of EFH and may include direct (e.g., contamination or physical disruption), indirect (e.g., loss of prey species, including affected life history stages), site-specific, or habitat-wide impacts, including individual, cumulative, or synergistic consequences of actions (50 CFR 600.810).

This EFH assessment describes potential adverse effects on designated EFH for federally managed fisheries in the action area (defined in Chapter 3, Description of the Action Area). It also describes conservation measures proposed to avoid, minimize, or otherwise offset potential adverse effects on EFH resulting from the proposed action.

8.2 Project Description

Refer to Chapter 2, Description of the Action, of this document for a description of the Proposed Project.

8.3 Essential Fish Habitat Designations

The action area includes designated EFH for three fishery management plans: coastal pelagics (Pacific Fishery Management Council 1998), Pacific coast groundfish (Pacific Fishery Management Council 2006), and Pacific salmon (Pacific Fishery Management Council 1999). The species covered in these three fishery management plans are summarized in Tables 8-1, 8-2, and 8-3.

In Table 8-1, *not applicable* indicates that a species does not have a particular life stage in its life history, or that EFH of juveniles is not identified separately for small juvenile and large juvenile stages. For many species, habitats occupied by juveniles differ substantially, depending on the size

(or age) of the fish. Frequently, small juveniles are pelagic and large juveniles live on or near the bottom; these life stages are identified separately in the following tables when sufficient information is available to do so. When juvenile habitats do not differ so substantially or when information is insufficient to identify differences, EFH is identified only for the juvenile stage (small and large juveniles combined).

Table 8-1. Life Stages and General Habitats of Coastal Pelagic Species

Species	Adults	Spawning/ Mating	Large Juveniles	Juveniles/ Small Juveniles	Larvae	Eggs/ Parturition
Northern anchovy	Pelagic, marine waters	Pelagic, off coast	NA	Nearshore; 0–80 m	Pelagic, near surface; 0–45 m	Pelagic, near surface; 0–45 m
Pacific sardine	Pelagic; estuarine, nearshore and offshore habitats	Upper 45 m of water column; 160–400 km offshore	NA	Pelagic, nearshore	Same as adults	Same as adults
Pacific (chub) Mackerel	Pelagic, nearshore to 400 km offshore, shallow banks; 0–275 m	Same as adults	NA	Pelagic, sandy beaches, kelp beds, open bays	Appropriate water temperature, 14°C	NA
Jack mackerel	Pelagic; Inshore and Offshore; sometimes over rocky bottoms	Further offshore than other coastal pelagic species	NA	Pelagic; sometimes in small schools under floating kelp and debris	Pelagic; schooling	NA
Market squid	Pelagic, oceanic, near surface; 0–730 m	Shallow semi-protected nearshore areas of sand or mud	NA	Same as adults	Nearshore, oceanic	Same as spawning, near the surface; 4–45 m

Notes: km = kilometer, m = meter; NA = not applicable.

Table 8-2. Species and Life Stages Associated with Representative Habitat Types in Designated Essential Fish Habitat

Species	Intertidal	Estuaries (Outside of Puget Sound/ Strait of Georgia)	Algae / Seagrass	Soft and Mixed Bottom, Shelf	Soft and Mixed Bottom, Slope	Hard and Mixed Bottom, Shelf	Hard and Mixed Bottom, Slope	Canyons
Arrowtooth flounder				A4J4	A4J4	AJ1	A1J1	
Aurora rockfish				AJ	AJ	A	A	
Bank rockfish				A1J	A1	A2J	A2	AJ
Big skate	A			AJE	A			
Black rockfish	J		AJ	J1		AJ2		
Black-and-Yellow Rockfish	AJ		AJ	J1		AJ2		
Blackgill rockfish				J	J	A3	A	A
Blue rockfish			AJ			AJ2	A3	
Bocaccio			AJL	A4J4		A2J2	A3	A1J1
Bronzespotted rockfish						A	AJ	
Brown rockfish	A		AJ			A2J		J
Butter sole				AJ	A6			
Cabezon	AJLE		AJE			AJE		
Calico rockfish	J			A1J4		A2J2	A3	A
California scorpionfish	AJ		AJ	A		AJ		
California skate	AE	AJ		AJE	A6			
Canary rockfish	J		J	A1J1		A2J2		
Chilipepper	J		JL	AJ	A	AJ	A	J
China rockfish			A			AJ		
Copper rockfish	J		AJL	A1J1		A2J2		
Cowcod				J4		AJ2	A	A1
Curlfin sole				AJ	A6J6			
Darkblotched rockfish				A4J4	A4	A1J1	A1	A1
Dover sole					AJL	A5JL		
Dusky rockfish						AJ	A	
English sole	AJ	AJLE	AJ	AJ	A6			
Flag rockfish						AJ		A
Flathead sole				AJ	A			
Gopher rockfish	A7J7		AJ	J1		AJ2		
Grass rockfish	AJL		AJ	J1		AJ2		
Greenblotched rockfish				A1J1	A1	A2J2	A2	A
Greenspotted rockfish				A4J		A2J		A1
Greenstriped rockfish				A4J4	A4	A2J1	A2	
Harlequin rockfish						A	A3	

Species	Intertidal	Estuaries (Outside of Puget Sound/ Strait of Georgia)	Algae / Seagrass	Soft and Mixed Bottom, Shelf	Soft and Mixed Bottom, Slope	Hard and Mixed Bottom, Shelf	Hard and Mixed Bottom, Slope	Canyons
Honeycomb rockfish				J		AJ		J
Kelp greenling	AJL		AJE			AJE		
Kelp rockfish			AJL			AJ		
Leopard shark	AJ	AJ	AJ	A15		A1		
Lingcod	AJLE	JLE	A	J		AE		
Longnose skate				A4J4	A4			
Longspine thornyhead					A4J			
Mexican rockfish					A1	A	A1	
Olive rockfish	AJL		AJ			AJ		A
Pacific cod				AJE	A	JE		
Pacific grenadier					AJ			
Pacific hake (pacific whiting)	J							J
Pacific ocean perch				A	AJ	AJ	AJ	A
Pacific sanddab			A	A4J4	A4	A1J1	A1	
Petrale sole				AJ	AJ6			
Pink rockfish				A1J	A1J	A2	A2	A
Quillback rockfish	AJ		AJ	A1J4		A2J2		
Redbanded rockfish				A4J	A4J	A1	A1	
Redstripe rockfish				A1J1	A1J1	A2J2	A2J2	
Rex sole				AJ	AJ			
Rock sole	AJ			A4J4E	A4J4	A1J1		
Rosethorn rockfish				A1J	A1J	A2J2	A1	A
Rosy rockfish				A1J1		A2J2		
Rougheye rockfish				A4J	A4J	A2	A2	
Sablefish				J	AJL			A
Sand sole				AJ	A6			
Sharpchin rockfish				A1J4	A16J4	A2J1	A1J1	
Shortbelly rockfish	J		J	AJ1	A	AJ2		A
Shortraker rockfish				A4	A4	A2	A1	
Shortspine thornyhead				A4J4	A4J4	A1J1	A1J1	
Silvergray rockfish			J			AJ	AJ	
Soupfin shark	AJ	AJ		AJ	A			A
Speckled rockfish			J			AJ	A3	A
Spiny dogfish	AJ	AJ		AJ	AJ			
Splitnose rockfish			J	A4J4	A4J4	A1J1	A1J1	A
Spotted ratfish				AJE		AJE		
Squarespot rockfish						AJ		

Species	Intertidal	Estuaries (Outside of Puget Sound/ Strait of Georgia)	Algae / Seagrass	Soft and Mixed Bottom, Shelf	Soft and Mixed Bottom, Slope	Hard and Mixed Bottom, Shelf	Hard and Mixed Bottom, Slope	Canyons
Starry flounder		AJLE		A				
Starry rockfish						AJ	A3	
Stripetail rockfish			J	A4J	A4	A1J	A1	
Tiger rockfish						AJ	AJ	
Treefish						AJ		
Vermilion rockfish	J		AJL	J4		AJ1	A	A
Widow rockfish			J	A1J4	A1	A2J2	A2	A1J
Yelloweye rockfish				A1		A2J	A	A
Yellowmouth rockfish						A	A	
Yellowtail rockfish			AJ	A4	A4	A2J	A2	

Notes:
A = adults; J = juveniles; L = larvae; E = eggs.
1 Indicates association with mixed hard and soft habitat.
2 Indicates association with both hard and mixed hard and soft habitat.
3 Indicates a weak association with hard-bottomed habitats.
4 Indicates association with both soft and mixed hard and soft habitat.
5 Indicates a weak association with soft-bottomed habitats.
6 Indicates a weak association with soft-bottomed habitats or mixed hard and soft habitat.
7 Indicates a weak association with intertidal habitats.
Source: Pacific Fishery Management Council 2006.

Table 8-3. Life Stages and General Habitats of Pacific Salmon

Species	Eggs	Larvae	Juveniles (Freshwater)	Juveniles (Estuary and Oceanic)	Adults
Chinook salmon	Freshwater	Freshwater	Freshwater	Spring-summer-fall in estuary, year-round in ocean; pelagic; neustonic; 30–80-m (98–262 feet) preferred depth; all bottom types.	Year-round in ocean; pelagic; neustonic.
Coho salmon	Freshwater	Freshwater	Freshwater	Year-round, pelagic, often found near pycno- or haloclines.	Year-round in ocean; pelagic; neustonic.

Notes: m = meter.
Source: Pacific Fishery Management Council 1999.

There are five coastal pelagic species: northern anchovy, jack mackerel, Pacific sardine, Pacific (chub) mackerel, and market squid. A discussion of designated EFH and life histories is included in Amendment 8 to the Coastal Pelagic Species Fisheries Management Plan (Pacific Fishery Management Council 1998).

There are two Pacific salmon species that could occur in the action area: Chinook salmon and coho salmon. A discussion of designated EFH and life histories is included in Amendment 14, Appendix A to the Pacific Coast Salmon Plan (Pacific Fishery Management Council 1999). Additional life history information appears in Chapter 4, Description of the Species That May Be Affected of this document.

The updated Pacific coast groundfish fishery management plan includes 82 species and is discussed in the Pacific Coast Groundfish Management Plan for the California, Oregon, and Washington Groundfish Fishery as Amended through Amendment 19 Including Amendment 16-4 (Pacific Fishery Management Council 2006).

EFH for Pacific coast groundfish is defined as the aquatic habitat necessary to allow for groundfish production to support long-term sustainable fisheries for groundfish and for groundfish contributions to a healthy ecosystem. Groundfish EFH includes waters and substrate from depths less than or equal to 3,500 meters (11,483 feet) to the mean higher high water levels or upriver extent of saltwater intrusion. Seamounts in depths greater than 3,500 (11,483 feet) meters and areas designated as a habitat area of particular concern (HAPC) are also included as designated EFH. Artificial structures are not considered substrate unless they are designated as a HAPC. Under this definition, the action area coincides with designated EFH.

HAPCs are areas of habitat within EFH that are identified based on the importance of the ecological function provided by the habitat, how sensitive the habitat is to anthropogenic environmental degradation, to what extent development activities stress or will stress the habitat, and how rare the habitat type is. Five HAPCs have been identified in the groundfish fishery management plan and are defined as follows:

- **Estuaries.** Estuarine areas are protected nearshore environments such as bays, sounds, inlets and river mouths that are influenced by river flows and ocean tides. Varying salinities within estuaries provide great habitat diversity that also tends to be shallow, productive, and protected. Estuarine HAPC includes the area from the mean higher high water or upriver extent of saltwater intrusion to an imaginary line closing the mouth of the river, bay, or sound and to the seaward limit of wetland emergent vegetation occurring beyond that line. The upriver extent of saltwater intrusion is defined as the line upstream and landward of the point at which ocean-derived salts measure less than 0.5 part per thousand during the period of average annual low flow. This HAPC also includes offshore areas that have continuously diluted seawater due to estuarine influence.

- **Canopy kelp.** Kelp forests are generally found relatively close to shore along open coastlines and provide vertically structured habitat. They are very important to groundfish, which use them for nurseries, feeding, and shelter. Canopy kelp HAPC includes all waters, substrate, and other biogenic habitat associated with canopy-forming kelp species such as *Macrocystis* spp. and *Nereocystis* sp.

- **Seagrass.** Seagrass species are vascular plants that grow in highly productive, dense beds in lower intertidal and subtidal areas. Seagrass HAPC includes all waters, substrate, and other biogenic features associated with the seagrass species eelgrass (*Zostera* spp.), widgeongrass (*Ruppia maritima*), and surfgrass (*Phyllospadix* spp.).
- **Rocky reefs.** This habitat is composed of bedrock, boulders, or smaller rocks and can occur either in the nearshore or offshore. Rocky reef HAPC includes all waters, substrates and other biogenic features associated with the hard substrate to mean higher high water.
- **Areas of interest.** Off the coast of Oregon, Daisy Bank/Nelson Island, Thompson Seamount, and President Jackson Seamount are designated as areas of interest. All of these locations are distant from the action area; the nearest, Daisy Bank, is 48 kilometers (30 miles) due west of the action area.

There is one small rocky reef at the eastern edge of the action area. Project components described in Chapter 2, Description of the Action, would be sited to avoid this area. The broader action area includes one estuary (Yaquina Bay) and waters within the bay and in the vicinity of Yaquina Head supporting canopy kelp and seagrass. However, no project activities are proposed in these areas; they are included in the action area only because of their potential exposure to acoustic and contaminant stressors, as described below. No other HAPCs occur in the action area.

8.4 Potential Effects on Marine Biological Resources and Essential Fish Habitat

The potential effects on marine biological resources and EFH are discussed in Chapter 5, Environmental Baseline, of this document. Briefly, potential effects on EFH include the following:

- **Exposure to contaminants.** As detailed in Chapter 6, Analysis of Effects, contaminant sources would be antifouling paints and accidental materials spills. Antifouling paints would not contain TBT and would have extremely minor, near-field effects. Materials spills would be very unlikely, would not involve materials more hazardous than paint or petrochemicals, and would immediately be addressed via a formal, pre-existing plan that includes provisions for notification and cleanup. In view of these precautions, potential impacts are unlikely and minor.
- **EMFs.** As detailed in Chapter 6, Analysis of Effects, effects on fish and invertebrates would be minor and likely could only be detected within a few meters of the instrumentation buoys or vessel, WEC devices, USP, and electrical cables. Effects on turtles, birds, and marine mammals would likely be nonexistent.
- **Underwater sound**. As detailed in Chapter 6, Analysis of Effects, sound in excess of background levels would only result from the operations of vessels used to deploy, maintain, and recover project components. Torch-cutting of plate and pile anchors during decommissioning would be anticipated to result in low noise levels that may not exceed background levels except in the immediate vicinity of the cutting activity. Thus, sound would be generated only infrequently and for short periods of time. Sound generated by vessels would not attain levels known to harm or disturb fish, turtles, birds, or marine mammals, except that some behavioral effects might occur in marine mammals within 130 meters (426.5 feet) of the sound source. This potential effect

would be avoided by implementing a conservation measure, marine mammal avoidance, detailed in Chapter 6, Analysis of Effects. Sound generated by potential cutting of anchors using acetylene torch cutting is anticipated to generate low noise levels.

- **Biological effects due to structures**. As detailed in Chapter 6, Analysis of Effects, anchors, cables, and any other project components not treated with antifouling coatings would constitute a hard substrate subject to colonization by marine invertebrates. These structures would also act as fish-attracting devices and it is likely that congregations of fish and perhaps marine mammals would form in the project vicinity. Because of the project site's small size and its isolation in an open-ocean location approximately 3 kilometers (2 miles) offshore, this effect is not expected to result in any substantial deleterious alteration of EFH. Biological effects could also result if invasive species were introduced to Oregon coastal waters when the project components were deployed. This potential effect will be avoided by implementing a conservation measure, invasive species detection and removal, detailed in Chapter 6, Analysis of Effects.

Chapter 9
Conclusion

The Proposed Project has the potential to affect designated EFH through the following:

- exposure to contaminants,
- EMFs,
- underwater sound, and
- biological effects due to structures.

Potential impacts from these activities include alteration of water quality, creation of hard substrate, and alteration of acoustic and electrical properties of habitat. Project disturbance is not expected to result in long-term degradation of designated EFH. Effects would be very limited in size, and most effects would be limited in duration to periods of active project component deployment, operation, maintenance, and recovery.

There would be no direct effects on fish communities managed under the Pacific fishery management plans. There would be negligible, highly localized impacts on "substrate necessary to fish for spawning, breeding, feeding, or growth to maturity." Therefore, the proposed action would not adversely affect designated EFH for federally managed fisheries in Oregon waters.

Chapter 10
References

10.1 Written References

Adams, P.B., C.B. Grimes, S.T. Lindley, and M.L. Moser. 2002. Status review for North American green sturgeon, *Acipenser medirostris*. National Oceanic and Atmospheric Administration, National Marine Fisheries Service, Southwest Fisheries Science Center, Santa Cruz, California. 49 p. Available: <http://www.nmfs.noaa.gov/pr/pdfs/statusreviews/greensturgeon.pdf>. Accessed: July 27, 2010.

Alaska Department of Fish and Game. 2007. Salmon fisheries in Alaska – Harvest & Species overview. Available: <http://www.cf.adfg.state.ak.us/geninfo/finfish/salmon/salmon_harvest.php>. Accessed: July 23, 2010.

American Cetacean Society. 2004a. Blue whale (*Balaenoptera musculus*) fact sheet. Available: <http://www.acsonline.org/factpack/bluewhl.htm>. Accessed: July 26, 2010.

———. 2004b. Fin whale (*Balaenoptera physalus*) fact sheet. Available: <http://www.acsonline.org/factpack/finwhl.htm>. Accessed July 26, 2010.

Auth, T.D., R.D. Broeder, and K.M. Fisher. 2007. Diel variation in vertical distribution of an offshore ichthyoplankton community. *Fish. Bull.* 105: 313–326.

Basov, B.M. 1999. Behavior of sterlet sturgeon (*Acipenser ruthenus*) and Russian sturgeon (*Acipenser gueldenstaedtii*) in low-frequency electric fields. *Journal of Ichthyology* 39:782–787.

Beach Connection.net. 2009. Rare Sea Turtle, Shark Strand on N. Oregon Coast. Published 01/03/09. Available: <http://www.beachconnection.net/news/turtl010309_539.php>. Accessed October 24, 2011.

Bedard, R. 2005. Oregon Offshore Wave Energy Demonstration Project: Bridging the Gap Between the Completed Phase 1 Project Definition Study and the Next Phase – Phase 2 Detailed Design and Permitting. Electrical Power Research Institute Report E2I EPRI-WP-010 OR. Palo Alto, CA.

Berman-Kowalewski, M., F.M.D. Gulland, S. Wilkin, J. Calambokidis, B. Mate, J. Cordaro, D. Rotstein, J. St. Leger, P. Collins, K. Fahy, and S. Dover. 2010. Association between blue whale (*Balaenoptera musculus*) mortality and ship strikes along the California coast. *Aquatic Mammals* 36(1):59–66.

Boehlert, G.W, G.R. McMurray, and C.E. Tortorici (eds). 2008. Ecological effects of wave energy in the Pacific Northwest. U.S. Dept. Commerce, NOAA Technical Memo. NMFS-F/SPO-92, 174 p.

Brodeur, R.D., J.P. Fisher, D.J. Teel, R.L. Emmett, E. Casillas, and T.W. Miller. 2004. Juvenile salmonid distribution, growth, condition, origin, and environmental and species associations in Northern California Current. *Fishery Bulletin* 102:25–46.

Brown, K. 2007. Evidence of spawning by green sturgeon, *Acipenser medirostris*, in the upper Sacramento River, California. *Environmental Biology of Fishes* 79: 297–303. (As cited in NMFS 2008c).

Brown, R.F., S.D. Riemer, and B.E. Wright. 2002. Population status and food habits of Steller sea lions in Oregon. Representative. from Oregon Department of Fish and Wildlife to Oregon State University. Contract F0225A-01. 17 pp.

Bruggeman, J.J., G. Green, R. Grotefendt, and C. Bowlby. 1992. Oregon and Washington Marine Mammal and Seabird Surveys, Final Report. Prepared for Minerals Management Service Pacific OCS Region. OCS Study MMS 91-0093.

Calambokidis, J. and J. Barlow. 2004. Abundance of blue and humpback whales in the eastern North Pacific estimated by capture-recapture and line-transect methods. *Marine Mammal Science* 20(1):63–85.

Calambokidis, J., T. Chandler, L. Schlender, G.H. Steiger, and A. Douglas. 2003. Final report, research on humpback and blue whales off California, Oregon and Washington in 2002. Prepared for Southwest Fisheries Science Center, Olympic Coast National Marine Sanctuary, Scripps Institute of Oceanography, and Office of Naval Research. Prepared by Cascadia Research, Olympia, WA. August. Available: <http://www.cascadiaresearch.org/reports/rep-MN02.pdf>. Accessed: July 26, 2010.

Calambokidis, J., E.A. Falcone, T.J. Quinn, A.M. Burdin, P.J. Clapham, J.K.B. Ford, C.M. Gabriele, R. LeDuc, D. Mattila, L. Rojas-Bracho, J.M. Straley, B.L. Taylor, J. Urban, D. Weller, B.H. Witteveen, M. Yamaguchi, A. Bendlin, D. Camacho, K. Flynn, A. Havron, J. Huggins, and N. Maloney. 2008. SPLASH: Structure of Populations, Levels of Abundance and Status of Humpback Whales in the North Pacific. Final report for Contract AB133F-03-RP-00078. 58 p.

Carretta, J.V., K.A. Forney, M.M. Muto, J. Barlow, J. Baker, B. Hanson, and M. Lowry. 2005. United States Pacific Marine Mammal Stock Assessments: 2005. United States Department of Commerce, National Oceanic and Atmospheric Administration Technical Memorandum NMFS–SWFSC-375. 316 pp.

Carter, H.R. and R.A. Erickson. 1988. Population Status and Conservation Problems of the Marbled Murrelet in California, 1892-1987. Unpublished report for California Department of Fish and Game, Sacramento, CA.

Castritsi-Catharios J., N. Bourdaniotis, and G. Persoone. 2007. A new simple method with high precision for determining the toxicity of antifouling paints on brine shrimp larvae (*Artemia*): First results. *Chemosphere* 67(6):1127–1132.

Center for Whale Research. 2010. Center for Whale Research Identification. Available: <http://www.whaleresearch.com/orca_ID_pods.html>. Accessed: July 26, 2010.

Contreras, A. 1998. Birds of Coos County, Oregon Status and Distribution. Oregon Field Ornithologists. OFO Special Publication Number 12. 161 pp.

Dalen, J. and Knutsen, G.M. 1987. Scaring effects on fish and harmful effects on eggs, larvae and fry by offshore seismic explorations. Pp. 93-102. In: Merklinger, H. M. (Ed.). *Progress in Underwater Acoustics.* New York: Plenum Press.

Eckert, S.A. and L.M. Sarti. 1997. Distant fisheries implicated in the loss of the world's largest leatherback nesting population. *Marine Turtle Newsletter* 78:2–7. Cited in LGL 2001.

Electric Power Research Institute. 2004. Offshore Wave Power in the United States: Environmental Issues. E2I Global EPRI – 007 – US. December 21, 2004.

Electricity Innovation Institute. 2004. E2I EPRI Survey and Characterization of Potential Offshore Wave Energy Sites in Oregon. E2I EPRI-WP-003 OR. Electric Power Research Institute. May 17. Available: <http://oceanenergy.epri.com/attachments/wave/reports/007_Wave_Envr_Issues_Rpt.pdf>. Accessed: August 4, 2010.

Environment News Service. 2007. Court upholds federal listing for Oregon coast coho salmon. Available: <http://www.ens-newswire.com/ens/oct2007/2007-10-09-091.asp>. Accessed: July 23, 2010.

Erickson, D.L. and J.E. Hightower. 2007. Oceanic distribution and behavior of green sturgeon. *American Fisheries Society Symposium* 56:197–211.

Erickson D.L., J.A. North, J.E. Hightower, J. Weber and L. Lauck. 2002. Movement and habitat use of green sturgeon (*Acipenser medirostris*) in the Rogue River, Oregon, USA. *J. Appl. Ichthyol.* 18:565-569.

Erickson, D.L. and M. Webb. 2007. Spawning periodicity, spawning migration, and size at maturity of green sturgeon, *Acipenser medirostris*, in the Rogue River, Oregon. *Environmental Biology of Fishes* 79:255–268.

Floating Power Plan A/S. 2011. Home of Poseidon. Available: <http://www.poseidonorgan.com/> Accessed May 9, 2011.

Gill, A.B., Y. Huang, I. Gloyne-Philips, J. Metcalfe, V. Quayle, J. Spencer, and V. Wearmouth. 2009. COWRIE 2.0 Electromagnetic Fields (EMF) Phase 2: EMF-sensitive fish response to EM emissions from sub-sea electricity cables of the type used by the offshore renewable energy industry. Commissioned by COWRIE Ltd (project reference COWRIEEMF-1-06). Available: <http://www.offshorewindfarms.co.uk/Assets/COWRIE_2_EMF_FINAL_REPORT_Combined_09.pdf>. Accessed: August 4, 2010.

Good, T.P., R.S. Waples, and P. Adams (Eds.). 2005. Updated status of federally listed ESUs of West Coast salmon and steelhead. United States Department of Commerce, National Oceanic and Atmospheric Administration Technical Memorandum NMFS-NWFSC-66, 598 p.

Groot, C. and L. Margolis (Editors). 1998. Pacific Salmon Life Histories. UBC Press, Vancouver.

Hanson, C. 2009. Oregon Coast Aquarium Rehabilitating Stranded Green and Olive Ridley Sea Turtles. December 1. Available:<http://www.zandavisitor.com/newsarticle-2638-Oregon_Coast_Aquarium_Rehabilitating_Stranded_Green_and_Olive_Ridley_Sea_Turtles>. Accessed: October 24, 2011.

Hinke, J.T., G.M. Watters, G.W. Boehlert, and P. Zedonis. 2005. Ocean habitat use in autumn by Chinook salmon in coastal eaters of Oregon and California. *Marine Ecology Progress Series* 285:181-192.

Huff, M.H., M.G. Raphael, S.L. Miller, S.K. Nelson, and J. Baldwin (Technical Coordinators). 2006. Northwest Forest Plan--The First 10 Years (1994-2003): Status and Trend of Populations and Nesting Habitat for the Marbled Murrelet. General Technical Report PNW-GTR-650. Portland, Oregon: United States Department of Agriculture, Forest Service, Pacific Northwest Research

Station. 149 p. Available: <http://www.fs.fed.us/pnw/pubs/pnw_gtr650.pdf>. Accessed: July 27, 2010.

Israel, J.A. and B. May. 2007. Mixed Stock Analysis of Green Sturgeon from Washington State Coastal Aggregations. Final Report. Genomic Variation Laboratory, University of California-Davis, Davis, California.

Johnson, J.H., and A.A. Wolman. 1984. The humpback whale, *Megaptera novaeangliae*. *Mar. Fish. Rev.* 46(4):30–37.

Keister, J.E. and W.T. Peterson. 2003. Zonal and seasonal variations in zooplankton community structure off the central Oregon Coast, 1998-2000. *Progress in Oceanography* 57:341–361.

Landry, M.R., Postel, J.R., Peterson, W.K., and Newman, J. 1989. Broad-scale patterns in the distribution of hydrographic variables. In M.R. Landry and B.M. Hickey. *Coastal Oceanography of Washington and Oregon*. Elsevier Press. Amsterdam.

Lauten, D.J., K.A. Castelein, S. Weston, K. Eucken, and E.P. Gaines. 2006. The Distribution and Reproductive Success of the Western Snowy Plover along the Oregon Coast – 2006. The Oregon Natural Heritage Information Center, Institute for Natural Resources, Oregon State University, Portland, OR.

LGL Ecological Research Associates, Ltd. 2001. Leatherback sea turtles and the California/Oregon drift gillnet fishery. Available: <http://ca-seafood.ucdavis.edu/news/turtles.pdf>. Accessed: July 27, 2010.

Lindley, S.T., M.L. Moser, D.L. Erickson, M. Belchik, D.W. Welch, E.L. Rechisky, J.T. Kelly, J. Heublein, and A.P. Klimley. 2008. Marine Migration of North American Green Sturgeon. *Transactions of the American Fisheries Society* 137(1):182-194.

Loeffelman, P.H., D.A. Klinect, and J.H. Van Hassel. 1991. Fish Protection at Water Intakes Using a New Signal Development Process and Sound System. In: Proceedings of the International Conference on Hydropower, Denver, Colorado, July 24–26, 1991. Sponsored by American Society of Civil Engineers.

Mann, S., N.H.C. Sparks, M.M. Walker, and J.L. Kirschvink. 1988. Ultrastructure, morphology and organisation of biogenic magnetite from sockeye salmon, *Oncorhynchus nerka*; implications for magnetoreception, *Journal of Experimental Biology* 140: 35–49.

Mathews, N.J.C. and A.E. Burger. 1998. Diving depth of a marbled murrelet. *Northwestern Naturalist* 79:70–71.

McMurray, G. 2010. Planning & Assessment Frameworks – Electromagnetic Fields. Revised: 6/20/2010. Available: <http://www.advancedh2opower.com/framework/Hydrokinetics%20Knowledge%20Base/Electromagnetic%20Fields.aspx>. Accessed: July 30, 2010.

McShane, C., T. Hamer, H. Carter, G. Swartzman, V. Friesen, D. Ainley, R. Tressler, K. Nelson, A. Burger, L. Spear, T. Mohagen, R. Martin, L. Henkel, K. Prindle, C. Strong, and J. Keany. 2007. Evaluation report for the 5-year status review of the marbled murrelet in Washington, Oregon, and California. Unpublished report. EDAW, Inc. Seattle, Washington. Prepared for the United States Fish and Wildlife Service, Region 1. Portland, Oregon. Available:

<http://www.fws.gov/arcata/es/birds/MM/documents/mm5yr_rpt_final_web.pdf>. Accessed: July 27, 2010.

Miller, S.L., C.J. Ralph, M.G. Raphael, C. Strong, C.W. Thompson, J. Baldwin, M.H. Huff, and G.A. Falax. 2006. Chapter 3: At-sea monitoring of marbled murrelet population status trend in the Northwest Forest Plan area. Pages 31–60 in M.H. Huff, M.G. Raphael, S.L. Miller, S.K. Nelson, and J. Baldwin, Technical Coordinator, Northwest Forest Plan – The first 10 years (1994-2003): status and trends of populations and nesting habitat for the marbled murrelet. General Technical Report PNW-GTR-650. USDA Forest Service, Pacific Northwest Research Station, Portland, Oregon.

Minerals Management Service. 2007. Draft Programmatic EIS for Alternative Energy Development and Production and Alternative Use of Facilities on the Outer Continental Shelf. United States Department of the Interior. March 2007. Available: <http://ocsenergy.anl.gov/documents/dpeis/index.cfm>. Accessed: August 4, 2010.

Moyle, P.B. 2002. *Inland Fishes of California*, 2nd Edition. University of California Press, Berkeley and Los Angeles, California. 502 pp. (As cited in NMFS 2008c.)

Myers, J.M., R.G. Kope, G.J. Bryant, D. Teel, L.J. Lierheimer, T.C. Wainwright, W.S. Grand, F.W. Waknitz, K. Neely, S.T. Lindley, and R.S. Waples. 1998. Status review of Chinook salmon from Washington, Idaho, Oregon, and California. United States Department of Commerce, National Oceanic and Atmospheric Administration Technical Memorandum NMFS-NWFSC-35, 443 pp.

National Marine Fisheries Service. 1991. Recovery Plan for the Humpback Whale (*Megaptera novaeanglia*). Prepared by the Humpback Whale Recovery Team for the National Marine Fisheries Service, Silver Spring, Maryland. 105 pp.

———. 1998. Recovery Plan for the Blue Whale (*Balaenoptera musculus*). Prepared by Reeves R.R., P.J. Clapham, R.L. Brownell, Jr., and G.K. Silber for the National Marine Fisheries Service, Silver Spring, Maryland. 42 pp.

———. 2005a. Green Sturgeon (*Acipenser medirostris*) status review update. National Marine Fisheries Service Southwest Fisheries Science Center, Santa Crux, California. 31 pp. Available: <http://www.nmfs.noaa.gov/pr/pdfs/statusreviews/ greensturgeon_update.pdf>. Accessed: July 27, 2010.

———. 2005b. Humpback Whale: Eastern North Pacific Stock Assessment. National Marine Fisheries Service. 7 pp.

———. 2006. Draft Recovery Plan for the Fin Whale (*Balaenoptera physalus*). National Marine Fisheries Service, Silver Spring, MD.

———. 2007. Green Sea Turtle (Chelonia mydas) 5-Year Review: Summary and Evaluation. Available: < http://www.nmfs.noaa.gov/pr/pdfs/species/greenturtle_5yearreview.pdf>. Accessed: October 24, 2011.

———. 2007a. Southern Oregon/Northern California Coast Domain. Available: <http://swr.nmfs.noaa.gov/recovery/SONCC.htm>. Accessed: July 23, 2010.

———. 2007b. Draft revised Recovery Plan for the Steller Sea Lion (*Eumetopias jubatus*). National Marine Fisheries Service, Silver Spring, Maryland. 305 pp.

———. 2007c. Green Sturgeon (Acipenser medirostris). Available: <http://www.nmfs.noaa.gov/pr/species/fish/greensturgeon.htm>. Accessed: July 27, 2010.

———. 2007d. Species of Concern - Green Sturgeon (*Acipenser medirostris*) Northern DPS. Available: <http://www.nmfs.noaa.gov/pr/pdfs/species/greensturgeon_detailed.pdf>. Accessed: July 27, 2010.

———. 2007e. 2007 Federal recovery outline. Southern Oregon/Northern California coast coho salmon. National Marine Fisheries Service Southwest Region Arcata Area Office. December 12, 2007.

———. 2008a. Recovery Plan for Southern Resident Killer Whales (*Orcinus orca*). National Marine Fisheries Service, Northwest Region, Seattle, Washington. Available: <http://www.nwr.noaa.gov/Marine-Mammals/Whales-Dolphins-Porpoise/Killer-Whales/ESA-Status/upload/SRKW-Recov-Plan.pdf>. Accessed: July 26, 2010.

———. 2008b. Recovery Plan for the Steller Sea Lion (*Eumetopias jubatus*). Revision. National Marine Fisheries Service, Silver Spring, Maryland. 325 pp.

———. 2008c. Designation of Critical Habitat for the Southern Distinct Population Segment of Green Sturgeon. Section 4(b)(2) Report. August 2008.

———. 2008d. Marine Mammal Viewing Guidelines and Regulations. Revised March 19, 2008. Available: <http://www.fakr.noaa.gov/protectedresources/mmv/guide.htm>. Accessed: May 5, 2011.

———. 2009. Designation of Critical Habitat for the Leatherback Sea Turtle. Endangered Species Act section 4(b)(2) report. December 2009. Available: <http://www.nmfs.noaa.gov/pr/pdfs/species/leatherback_esa4b2.pdf>. Accessed: July 27, 2010.

———. 2011a. Loggerhead Sea Turtle. Web Page. Office of Protected Resources. Available: <http://www.nmfs.noaa.gov/pr/species/turtles/loggerhead.htm>. Accessed: October 27, 2011.

———. 2011b. Olive Ridley Sea Turtle. Web Page. Office of Protected Resources. Available: <http://www.nmfs.noaa.gov/pr/species/turtles/oliveRidley.htm >. Accessed: October 27, 2011.

National Marine Fisheries Service and United States Fish and Wildlife Service. 1998a. Recovery Plan for United States Pacific Populations of the Leatherback Turtle (*Dermochelys coriacea*). National Marine Fisheries Service, Silver Spring, Maryland. Available: <http://www.nmfs.noaa.gov/pr/pdfs/recovery/turtle_leatherback_pacific.pdf>. Accessed: July 27, 2010.

———. 1998b. Recovery Plan for United States Pacific Populations of the Leatherback Turtle (*Dermochelys coriacea*). National Marine Fisheries Service, Silver Spring, Maryland. Available: <http://www.nmfs.noaa.gov/pr/pdfs/recovery/turtle_leatherback_pacific.pdf>. Accessed: July 27, 2010.

———. 2007. Leatherback Sea Turtle (*Dermochelys coriacea*) 5-Year Review: Summary and Evaluation. National Marine Fisheries Service, Silver Spring, Maryland and United States Fish and Wildlife Service, Jacksonville, Florida. Available:

<http://www.fws.gov/northflorida/SeaTurtles/2007-Reviews/2007-leatherback-turtle-5-year-review-final.pdf>. Accessed: July 27, 2010.

———. 2007. Green Sea Turtle (Chelonia mydas) 5-Year Review: Summary and Evaluation. Available: <http://www.nmfs.noaa.gov/pr/pdfs/species/greenturtle_5yearreview.pdf>. Accessed: October 24, 2011.

National Marine Fisheries Service Biological Review Team. 2008. Summary of Scientific Conclusions of the Review of the Status of Eulachon (*Thaleichthys pacificus*) in Washington, Oregon, and California. Seattle, WA. Northwest Fisheries Science Center. December. 229pp.

National Oceanic and Atmospheric Administration. 2007a. Killer whale (*Orcinus orca*). NOAA Fisheries, Office of Protected Resources. Available: <http://www.nmfs.noaa.gov/pr/species/mammals/cetaceans/killerwhale.htm>. Accessed: July 26, 2010.

———. 2007b. Consultation on Remand for Operation of the Federal Columbia River Power System, 11 Bureau of Reclamation Projects in the Columbia Basin and ESA Section 10(a)(1)(A) Permit for Juvenile Fish Transportation Program (Revised and reissued pursuant to court order, NWF v. NMFS, Civ. No. CV 01-640-RE (D. Oregon)).

———. 2007c. Steller sea lion and northern fur seal research: draft programmatic environmental impact statement.

———. 2008. Fin whale (*Balaenoptera physalus*): California/Oregon/Washington stock. Revised 12/15/2008. Available: <http://www.nmfs.noaa.gov/pr/pdfs/sars/po2008whfi-cow.pdf>. Accessed: July 26, 2010.

———. 2009a. Humpback whale (*Megaptera novaeangliae*): California/Oregon/Washington stock. Revised: October 15, 2009. Available: <http://www.nmfs.noaa.gov/pr/pdfs/sars/po2009whhb-cow.pdf>. Accessed: July 26, 2010.

———. 2009b. Blue whale (*Balaenoptera musculus*): eastern north Pacific stock. Revised: October 15, 2009. Available: <http://www.nmfs.noaa.gov/pr/pdfs/sars/po2009whbl-en.pdf>. Accessed: July 26, 2010.

———. 2010. Leatherback Turtle (*Dermochelys coriacea*). NOAA Fisheries Office of Protected Species. <http://www.nmfs.noaa.gov/pr/species/turtles/leatherback.htm>. Accessed July 26, 2010.

Nehls, H.B. 2003. Short-tailed Albatross. P. 40 in D.B. Marshall, M.G. Hunter, and A.L. Contreras (eds.) *Birds of Oregon: A General Reference*. Oregon State University Press, Corvallis, OR.

Nelson, P.A. 2003. Marine fish assemblages associated with fish aggregating devices (FADs): effects of fish removal, FAD size, fouling communities, and prior recruits. *Fishery Bulletin* 101: 835–850.

Nelson, S.K. 1997. Marbled Murrelet (*Brachyramphus marmoratus*). In A. Poole and F. Gill, Editors. *The Birds of North America,* No. 276. The Academy of Natural Sciences, Philadelphia, Pennsylvania, and The American Ornithologists Union, Washington, D.C.

Nelson, S.K., M.H. Huff, S.L. Miller, and M.G. Raphael. 2006. Chapter 2: Marbled Murrelet Biology: Habitat Relations and Populations. Pp. 9-30 in M.H. Huff, M.G. Raphael, S.L. Miller, S.K. Nelson, and J. Baldwin, Technical Coordinator. Northwest Forest Plan – The First 10 years (1994-2003):

Status and Trends of Populations and Nesting Habitat for the Marbled Murrelet. General Technical Report PNW-GTR-650. USDA Forest Service, Pacific Northwest Research Station, Portland, OR.

Normandeau et al. 2011.

Northwest Fisheries Science Center. 2007. Marine Mammal Program. Available: <http://www.nwfsc.noaa.gov/research/divisions/cbd/marine_mammal/marinemammal.cfm>. Accessed: July 26, 2010.

Ohsumi, S. and S. Wada. 1974. Status of whale stocks in the North Pacific, 1972. *Rept. Int. Whal. Commission* 25:114–126.

Olegario, A. 2007. Over-Wintering Diet, Growth, and Prey Available To Juvenile Coho Salmon (*Oncorhynchus kisutch*) in the West Fork Smith River, Oregon. Thesis, Oregon State University, Corvallis, OR. Available: <http://ir.library.oregonstate.edu/jspui/bitstream/1957/3880/1/THESIS_%20A_Olegario%20v7.pdf>. Accessed: July 23, 2010.

Oregon Department of Environmental Quality. 2010. Laboratory Analytical Storage and Retrieval Database search results for site 30244. Available: <http://deq12.deq.state.or.us/lasar2/Results.aspx?opener=1&st=30244>. Accessed: June 2, 2010.

Oregon Department of Fish and Wildlife. 2006. Economics of the Oregon Coast. The Oregon Nearshore Strategy. Newport, OR.

———. 2008. Pinniped haulout information. GIS data download. Available: <http://www.oregonocean.info>. Accessed: July 26, 2010.

———. 2009. Commercial Fisheries Information. Available: <http://www.dfw.state.or.us/fish/commercial/landing_stats/2009AnnRep/index2009.asp>. Accessed: April 16, 2010.

———. 2010. Marine Mammal Research Program: Species Information. Last revised: 02/05/2010. Available: <http://www.dfw.state.or.us/MRP/mammals/species.asp>. Accessed: May 18, 2010.

Oregon State University. 2008. Blue whale (*Balaenoptera musculus*). OSU Marine Mammal Institute, Whale Telemetry Group. Available: <http://mmi.oregonstate.edu/wtg/research/blue-whale>. Accessed: July 26, 2010.

Oregon State University Marine Mammal Institute. 2011. Research Vessels. Available: <http://mmi.oregonstate.edu/research-vessels>. Accessed: May 9, 2011.

Oregon Wave Energy Trust. 2009. Assessment of Underwater Noise Generated By Wave Energy Devices. December. Prepared by JASCO Applied Sciences on behalf of Oregon Wave Energy Trust. Available: < http://www.oregonwave.org/wp-content/uploads/Assessment-of-Underwater-Noise-Generated-by-Wave-Energy-Devices-FINAL-mod.pdf >. Accessed: June 23, 2010.

Ortega-Ortiz, J. and B.R. Mate. 2008. Distribution and Movement Patterns of Gray Whales Off Central Oregon: Shore-Based Observations from Yaquina Head during the 2007/2008 Migration. Report

submitted to the Oregon Wave Energy Trust. Prepared by the Oregon State University Marine Mammal Institute. 44 pp. October.

Pacific Fishery Management Council. 1998. Appendix D. Description and Identification of Essential Fish Habitat for the Coastal Pelagic Species Fishery Management Plan. Pacific Fishery Management Council, Portland, OR. December.

———. 1999. Appendix A. Description and Identification of Essential Fish Habitat, Adverse Impacts, and Recommended Conservation Measures for Salmon. Pacific Fishery Management Council, Portland, OR.

———. 2000. Amendment 14 to the Pacific Coast Salmon Plan (1997). Appendix A: Identification and Description of Essential Fish Habitat, Adverse Impacts, and Recommended Conservation Measures for Salmon. Pacific Fishery Management Council. 146 pp.

———. 2006. Pacific Coast Groundfish Management Plan for the California, Oregon, and Washington Groundfish Fishery as Amended through Amendment 19 Including Amendment 16-4. Pacific Fishery Management Council, Portland, OR. November.

Pacific States Marine Fisheries Commission. 1996a. Green Sturgeon. Available: <http://www.psmfc.org/habitat/edu_gsturg_fact.html>. Accessed: July 27, 2010.

———. 1996b. Coho Salmon. Available: <http://www.psmfc.org/habitat/edu_coho_facts.html>. Accessed: July 23, 2010.

Pearcy, W.G. 1992. *Ocean Ecology of North Pacific Salmonids*. University of Washington Press, Seattle, Washington. 179pp.

Piatt, J.F., Kuletz, K.J., Burger, A.E., Hatch, S.A., Friesen, V.L., Birt, T.P. Arimitsu, M.L., Drew, G.S., Harding, A.M.A., and K.S. Bixler. 2007. Status review of the Marbled Murrelet (*Brachyramphus marmoratus*) in Alaska and British Columbia: United States Geological Survey Open-File Report 2006-1387, 258 p. Available: <http://pubs.usgs.gov/of/2006/1387/>. Accessed: July 27, 2010.

Quinn, T.P. and E. Brannon. 1982. The use of celestial and magnetic cues by orienting sockeye salmon smolts. *Journal of Comparative Physiology A: Neuroethology, Sensory, Neural, and Behavioral Physiology* 147(4):547–552.

Quinn T., R. Merrill, and E. Brannon. 1981. Magnetic field detection in Sockeye salmon. *Journal of Experimental Zoology* 217:137–142.

Reedsport OPT Wave Park. 2010. FERC Project No. 12713. Available: <http://www.oceanpowertechnologies.com/reedsport.htm>. Accessed: March 25, 2010.

Reeves, R.R., B.S. Stewart, P.J. Chapham, and J.A. Powell. 2002. Marine Mammals of the World: An Introduction. In *Walker's Mammals of the World*. R.M. Mowak, R.R. Reeves, and B.S. Stewart. The John Hopkins University Press. Baltimore, Maryland. New York, Alfred A. Knopf.

Rice, D.W. 1978. The humpback whale in the North Pacific: distribution, exploitation, and numbers. pp. 29–44 *in:* K.S. Norris and R.R. Reeves (eds.). Report on a Workshop on Problems Related to Humpback Whales (*Megaptera novaeangliae*) in Hawaii. Contr. Rept. to U. S. Marine Mammal Commn. NTIS PB-280–794. 90pp.

Ripple, W.J., S.K. Nelson, and E.M. Glenn. 2003. Forest landscape patterns around marbled murrelet nest sites in the Oregon coast range. *Northwest Naturalist*. 84(2):80–89.

Salem News. 2007. Rare Giant Leatherback Sea Turtle Sighted Along Oregon Coast. August 30, 2007 edition. Available: <http://www.salem-news.com/articles/august302007/ sea_turtle_83007.php>. Accessed: July 27, 2010.

San Luis and Delta-Mendota Water Authority and C.H. Hanson. 1996. Georgiana Slough acoustic barrier applied research project: results of 1994 phase II field tests. Department of Water Resources and Bureau of Reclamation.

Schabetsberger, R., C.A. Morgan, R.D. Brodeur, C.L. Potts, W.T. Peterson, and R.L. Emmett. 2003. Prey selectivity and diel feeding chronology of juvenile chinook (*Oncorhynchus tshawytscha*) and coho (*O. kisutch*) salmon in the Columbia River plume. *Fisheries Oceanography* 12(6):523–540.

Scottish Executive. 2007. Scottish Marine Renewables SEA Environmental Report Section C SEA Assessment: Chapter C18 EMF. Faber Maunsell and METOC PLC, 26 p. Available: <http://www.seaenergyscotland.net/public_docs/ER_C18_EMF_final.pdf>. Accessed: July 30, 2010.

Sediment Evaluation Framework (SEF). May 2009. Sediment Evaluation Framework for the Pacific Northwest. Prepared by U.S. Army Corps of Engineers Seattle, Portland, and Walla Walla Districts and Northwestern Division; U.S. Environmental Protection Agency Region 10; Washington Departments of Ecology and Natural Resources; Oregon Department of Environmental Quality; Idaho Department of Environmental Quality; National Marine Fisheries Service; and U.S. Fish and Wildlife Service.

Sound & Sea Technology engineering solutions. 2009. Advanced Anchoring and Mooring Study. Prepared for: Oregon Wave Energy Trust. November 30. Available: <http://www.oregonwave.org/wp-content/uploads/Anchor-and-Mooring-Study_FINAL-mod-051010.pdf>. Accessed November 18, 2011.

Strong, C.S. 1995. Distribution of marbled murrelets along the Oregon Coast in 1992. *Northwestern Naturalist*. 76(12):99–105

Strong, C.S. 2000. Distribution of Marbled Murrelets and Other Seabirds in the Vicinity of the New Carissa Shipwreck based on Near-Shore Vessel Surveys in February and March, 1999. Unpublished report. Crescent Coastal Research, Astoria, OR. 13 pp.

Strong, C.S. 2003. Decline of the marbled murrelet population on the central Oregon coast during the 1990's. *Northwestern Naturalist* 84:31–37.

Strong, C.S., B.S. Keitt, W.R. McIver, C.J. Palmer, and I. Gaffney. 1995. Distribution and population estimates of marbled murrelets at sea in Oregon during the summers of 1992 and 1993. Pp. 339-352 in C.J. Ralph, G.L. Hunt, Jr., M.G. Raphael, and J.F. Piatt (technical editors), *Ecology and Conservation of the Marbled Murrelet*. General Technical Report PNW-GTR-152. USDA Forest Service, Pacific Southwest Research Station, Albany, CA.

Suring, E.J., E.T. Brown, and K.M.S. Moore. 2006. Lower Columbia River Coho Status Report 2002 – 2004: Population Abundance, Distribution, Run Timing, and Hatchery Influence. Report Number OPSW-ODFW-2006-6, Oregon Department of Fish and Wildlife, Salem, OR.

Sustainable Ecosystems Institute. 2007. Endangered Species: Marbled Murrelet. Available:: <www.sei.org/murrelet.html>. Accessed: October 30, 2007.

Teachout, E. 2010. Evaluating the effects of elevated underwater sound pressure levels from pile driving on the marbled murrelet and the bull trout. Lacey, WA: Washington Fish and Wildlife Office, U.S. Fish and Wildlife Service. April.

TOPP(Tagging of Pacific Pelagics). 2010. Data for a migratory leatherback sea turtle. Available: <http://las.pfeg.noaa.gov/TOPP/>. Accessed: July 26, 2010.

U.S. Army Corps of Engineers. 2004. Cape Wind Energy Draft Environmental Impact Statement. Draft EIS/EIR/DRI. File no. NAE-2004-338-1. November 2004. Available: <http://www.nae.usace.army.mil/projects/ma/ccwf/deis.htm>. Accessed: August 4, 2010.

U.S. Army Corps of Engineers, Portland District, and U.S. Environmental Protection Agency Region 10. 2001. Yaquina Bay Ocean Dredged Material Disposal Site Evaluation Study and Environmental Assessment. Final Report. July 2001. 46 pp plus appendices.

———. 2008. Umpqua River, Oregon Ocean Dredged Material Disposal Site Evaluation Study and Environmental Assessment. Final Report. November 2008. 46 pp.

———. 2009. Rogue River, Oregon Ocean Dredged Material Disposal Site Evaluation Study and Environmental Assessment. April. 40 pp.

U.S. Army Corps of Engineers, Portland District, and U.S. Environmental Protection Agency Region 10. 2011. 2008 Monitoring Studies at Yaquina Bay Ocean Dredged Material Disposal Sites. Final Data Report. March. 40 pp.

U.S. Department of Energy. 2008. Marine and Hydrokinetic Technology Database. Last revised: November 25, 2008. Available: <http://www1.eere.energy.gov/windandhydro/hydrokinetic/default.aspx>. Accessed: February 24, 2010.

———. 2009. Report to Congress on the Potential Environmental Effects of Marine and Hydrokinetic Energy Technologies. Available: <http://www1.eere.energy.gov/windandhydro/pdfs/doe_eisa_633b.pdf>. Accessed: July 30, 2010.

U.S. Fish and Wildlife Service. 1997. Recovery plan for the threatened marbled murrelet (*Brachyramphus marmoratus*) in Washington, Oregon, and California. United States Fish and Wildlife Service Region 1, Portland, OR. 203 pp.

———. 2001. Western Snowy Plover (*Charadrius alexandrinus nivosus*) Pacific Coast Population Draft Recovery Plan. Portland, OR. xix + 630 pp.

———. 2007a. Upper Columbia Spring Chinook Salmon and Steelhead Recovery Plan. August 2007. Upper Columbia Salmon Recovery Board.

———. 2007b. Pacific Coast Population of Western Snowy Plover (*Charadrius alexandrines nivosus*) 5-Year Review Process: Short Form Summary. United States Fish and Wildlife Service, California/Nevada Operations Office. Available: <http://ecos.fws.gov/speciesProfile/SpeciesReport.do?spcode=B07C>. Accessed: July 26, 2010.

———. 2007c. Recovery Plan for the Pacific Coast Population of Western Snowy Plover (*Charadrius alexandrinus nivosus*). In 2 Volumes. Sacramento, CA. Xiv + 751 pages.

———. 2008. Short-tailed Albatross Recovery Plan. Anchorage, AK, 105 pp. <http://alaska.fws.gov/fisheries/endangered/pdf/stal_recovery_plan.pdf>. Accessed July 27, 2010.

———. 2010. Species Fact Sheet Sea Turtles. Oregon Fish and Wildlife Office. Web Page. Last updated: April 21, 2010. Available: <http://www.fws.gov/oregonfwo/Species/Data/SeaTurtles/>. Accessed: October 27, 2011.

———. 2011. Olive Ridley Sea Turtle (*Lepidochelys olivacea*). North Florida Ecological Services Office. Web Page. Last updated: August 16, 2011. Available: < http://www.fws.gov/northflorida/SeaTurtles/Turtle%20Factsheets/olive-Ridley-sea-turtle.htm>. Accessed: October 27, 2011.

Valkirs, A.O., P.F. Seligman, E. Haslbeck, and J.S. Caso. 2003. Measurement of copper release rates from antifouling paint under laboratory and in situ conditions: implications for loading estimation to marine water bodies. *Marine Pollution Bulletin* 46(6):763–779.

Van Eenennaam, J.P., J. Linares, S.I. Doroshov, D.C. Hillemeier, T.E. Willson, and A.A. Nova. 2006. Reproductive conditions of the Klamath River green sturgeon. *Transactions of the American Fisheries Society* 135(1):151–163.

Walker, M.M., T.P. Quinn, J.L. Kirschvink, and T. Groot. 1988. Production of single-domain magnetite throughout life by sockeye salmon, *Oncorhynchus nerka*. *Journal of Experimental Biology* 140:51-63.

Weinrich, M.T., M.R. Schilling, and C.R. Belt. 1992. Evidence for acquisition of navel feeding behavior: lobtail feeding in humpback whales, *Megaptera novaeangliae*. *Animal Behavior* 44:1059–1072.

Weitkamp, L. and K. Neely. 2002. Coho salmon (*Oncorhynchus kisutch*) ocean migration patterns: insight from marine coded-wire tag recoveries. *Canadian Journal of Fisheries and Aquatic Sciences* 59:1100–1115.

Weitkamp, L.A., T.C. Wainwright, G.J. Bryant, G.B. Milner, D.J. Teel, R.G. Kope, and R.S. Waples. 1995. Status review of coho salmon from Washington, Oregon, and California. United States Department of Commerce, NMFS-NWFSC-24, 258 pp.

Willson, M.F., R.H. Armstrong, M.C. Hermans, and K. Koski. 2006. Eulachon: a review of biology and an annotated bibliography. AFSC Processed Report 2006-12. U.S. Department of Commerce, National Marine Fisheries Service, Alaska Fisheries Science Center. August. 243pp.

Wydoski, R.S. and R.R. Whitney. 2003. *Inland Fishes of Washington*. Seattle: University of Washington Press.

Yano, A., M. Ogura, A. Sato, Y. Shimizu, N. Baba, K. Nagasawa. 1997. Effect of modified magnetic field on the ocean migration of maturing chum salmon, *Oncorhynchus keta*. *Marine Biology* 129(3):523–530.

10.2 Personal Communications

Henkel, Sarah. Assistant Professor. Hatfield Marine Science Center. Newport, OR. August 2, 2010—Email message.

Henkel, Sarah. Assistant Professor. Hatfield Marine Science Center. Newport, OR. November 12, 2011—Email message.

Lohn, K. Robert. National Marine Fisheries Service. August 10, 2007 —Letter to Lawrence Evans, U.S. Army Corps of Engineers regarding Finavera and OSU test WEC devices to be deployed off Newport, Oregon. Cited in Reedsport OPT Wave Park biological assessment.