APEX Project
M3 Wave LLC

Mike Morrow
M3 Wave LLC
Salem, Oregon

June 5th, 2014

Overview:

- APEX is a submerged pressure differential wave energy system
- M3 is proposing to do a short-duration test in late Summer
  - NOT grid connected
  - Camp Rilea REFSSA site
  - 30ft long device
  - 2-6 weeks max wet time
- Permitting through Army Corps, Department of State Lands, others

- What, where, when

M3 Wave's technology is a submerged, stationary wave energy device that converts wave pressure into electricity.

USDOE Water Power Peer Review Panel:
"This is a disruptive technology."
-DOE/EERE Water Power Review
November, 2011, Washington, DC

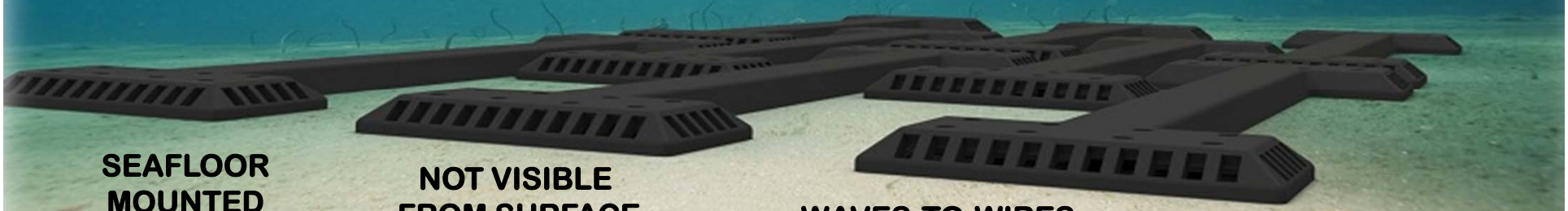

SEAFLOOR MOUNTED

NOT VISIBLE FROM SURFACE

NO EXPOSED MECHANICAL OR ELECTRICAL SYSTEMS

WAVES-TO-WIRES CONVERSION

MID-DEPTH/ NEAR SHORE

Benefits of Submerged

No impact on ocean view

No surface conflicts; Less impact on shipping traffic, fishing, recreation

Storm survivability. Safe from wind loads and extreme surface dynamics.

Before Deployment

After Deployment*

*(Illustrative purposes only, USCG marker buoy not shown)

How it works

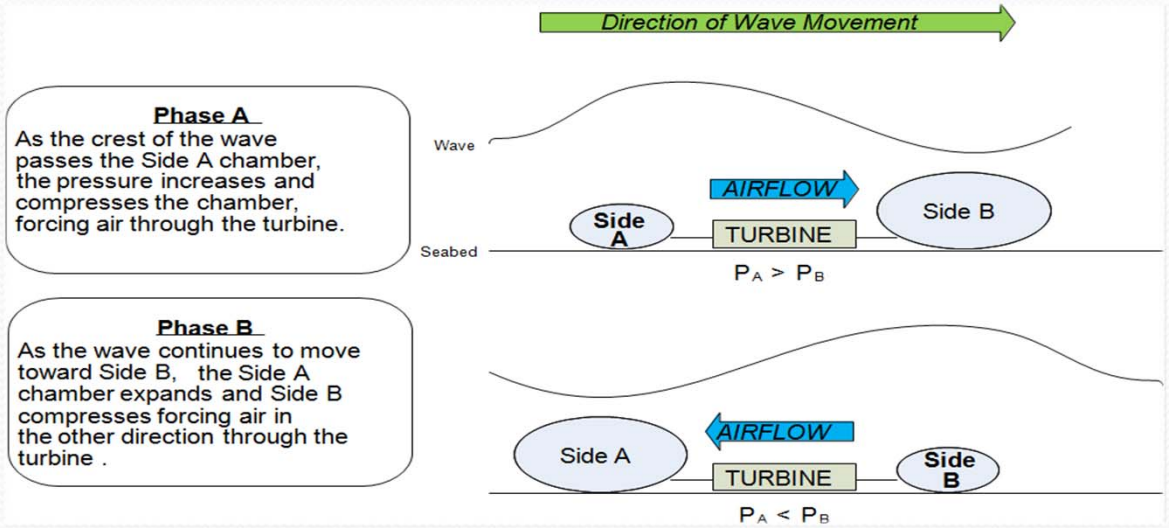
Direction of Wave Movement
Phase A
As the crest of the wave passes the Side A chamber, the pressure increases and compresses the chamber, forcing air through the turbine.
Wave
AIRFLOW
Side A
TURBINE
Side B
Seabed
$P_A > P_B$
Phase B
As the wave continues to move toward Side B, the Side A chamber expands and Side B compresses forcing air in the other direction through the turbine .
AIRFLOW
Side A
TURBINE
Side B
$P_A < P_B$

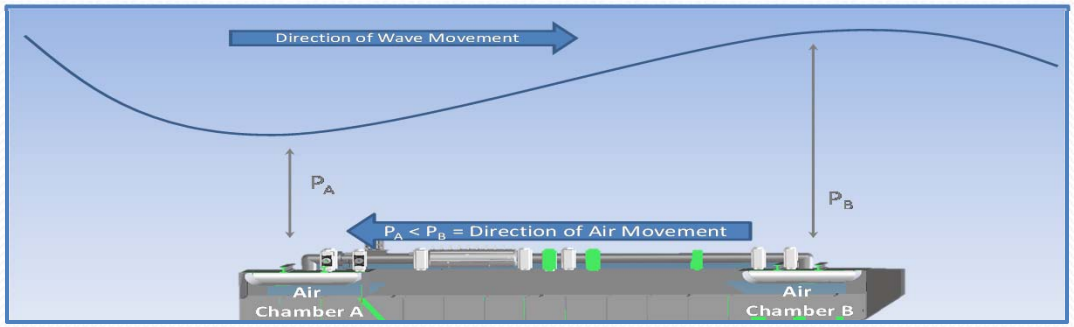
Direction of Wave Movement
P_A
P_B
$P_A < P_B$ = Direction of Air Movement
Air Chamber A
Air Chamber B

APEX Mission Objectives

Deployment & Recovery

- Demonstrate deployment and recovery of submerged wave energy system
- Low cost/ minimal infrastructure

Operation

- Demonstration of OAC remote start/stop and throttling in open water conditions
- Measurement and data logging of OAC velocities

Energy Conversion

- Demonstration of electricity extraction from OAC airflow
- Measurement and data logging of electrical generation

Tactical Power

- Demonstration of continuous station power to sensor payload
- Include power smoothing and short-term storage

APEX Hardware Profile

Deployment	• **DURATION: 2-4 weeks starting Sept 2014** • **DEPTH: 7 fathoms**
Power Output	• **Nominal wattage 10's-100's;** • **NOT grid connected**
Dimensions	• **Dry weight: 5,000lbs** • **H x W x L: 1m x 2m x 10m (3ft x 7ft x 30ft)**
Chemicals	• **System operating fluid: Air** • **No chemicals, no biocides, no toxic anti-fouling coatings**
Deployment	• **Crane off deck of vessel**

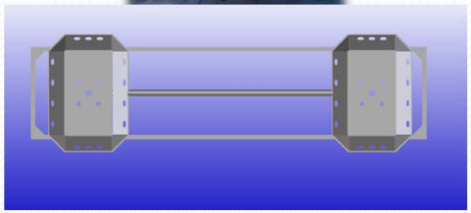

APEX Hardware Profile

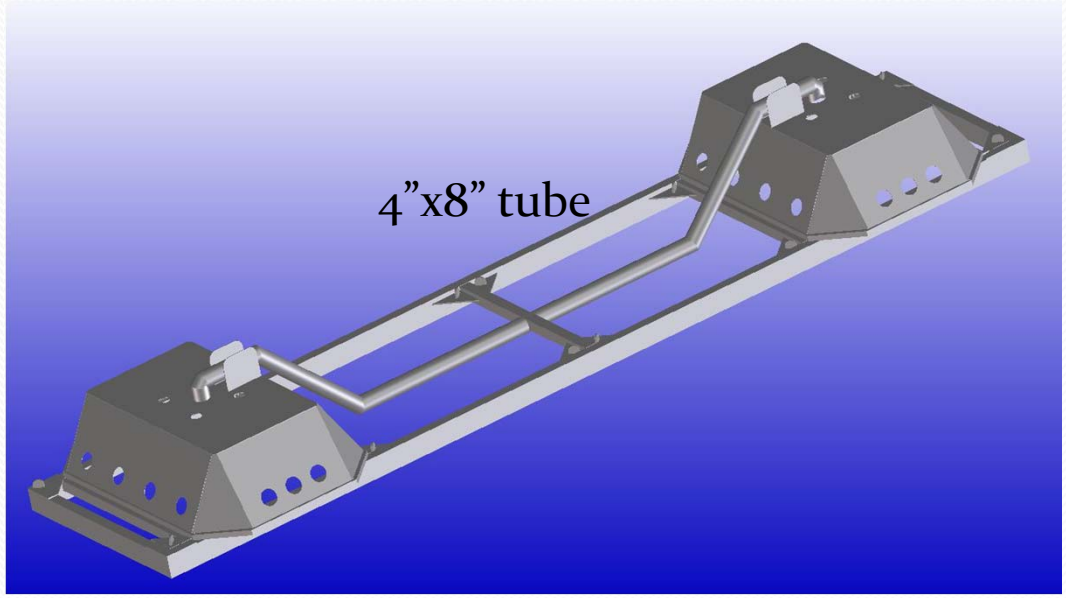

- Sits directly on ocean floor
- Internal and external data monitoring, storage, and telemetry
- Internal power dissipation

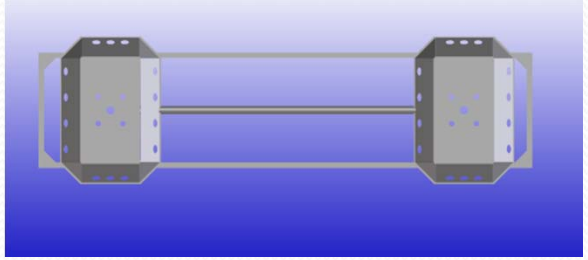

Dry weight: 5,000lbs

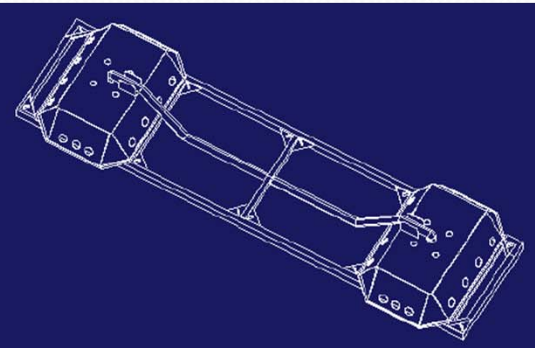

Lift point (shackle mount, max load 10,000lbs each lift point)

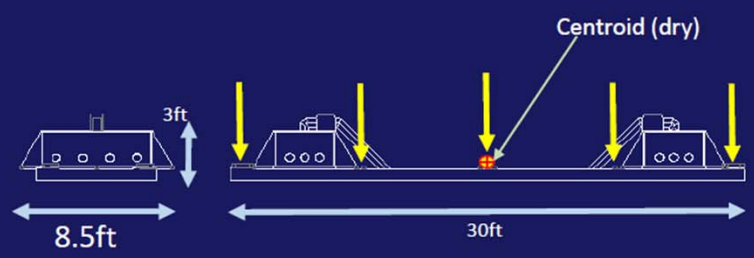

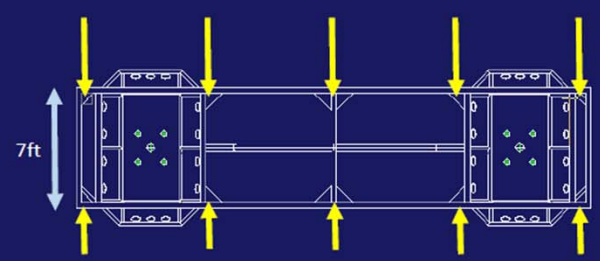

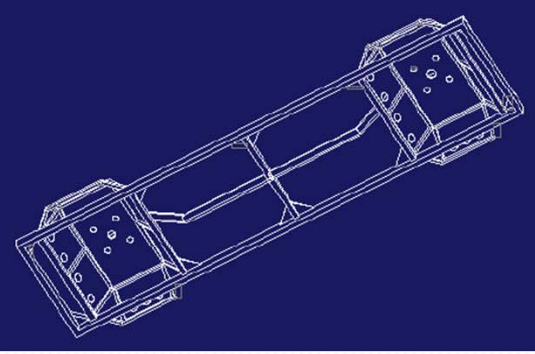

APEX Siting

Camp Rilea REFSSA- near SDZ; ~1.25mi off shore of Sunset Beach

Designated TSP Renewable Energy Study Site

- Suitable boat ramps in Warrenton, Astoria, and Nehalem/Garibaldi
- Numerous surf entry locations

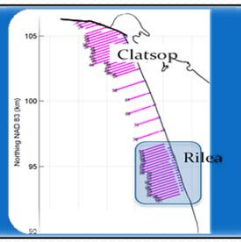

Extensive historical data on sediment transport

Close to fabrication and deployment resources in Astoria and Warrenton.

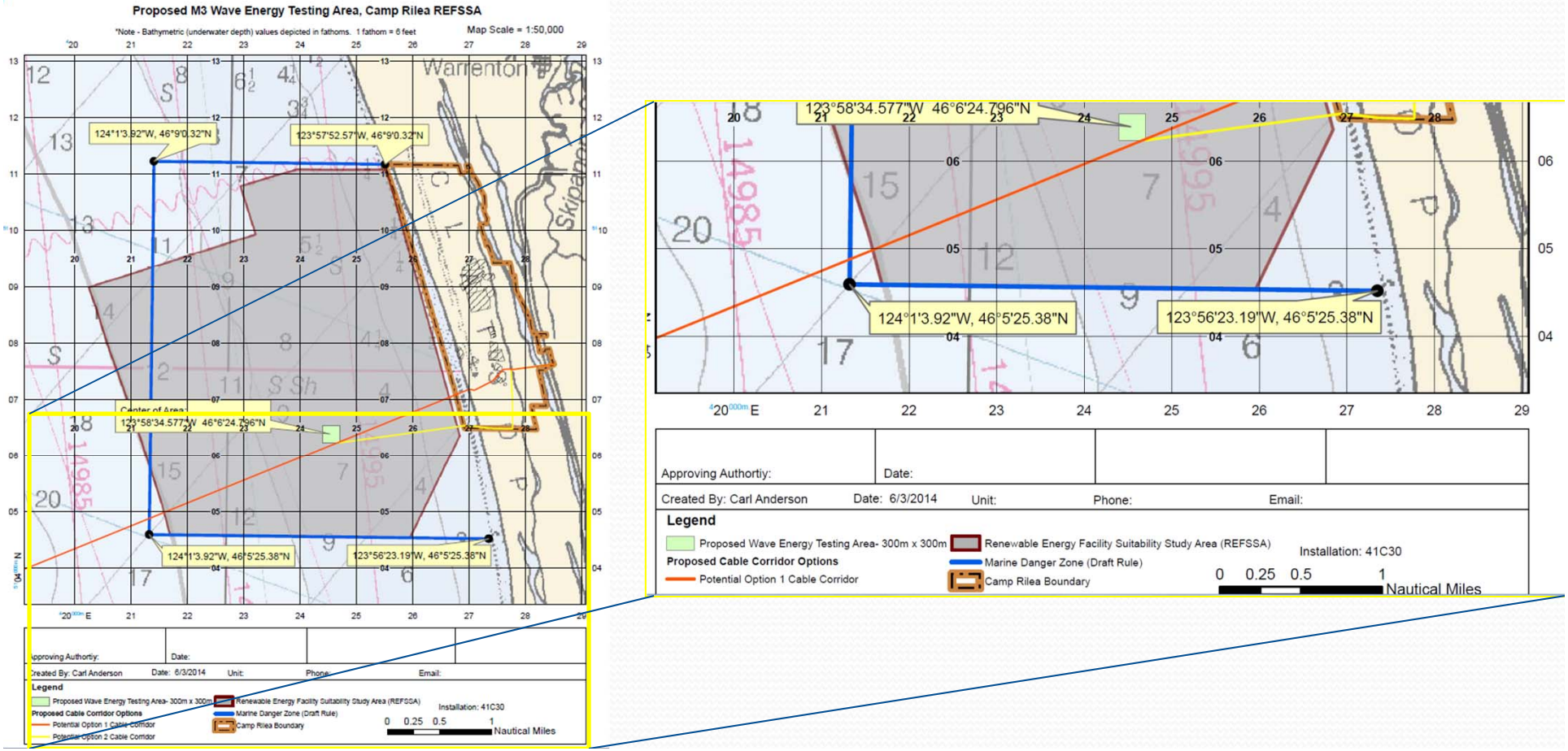
Proposed M3 Wave Energy Testing Area, Camp Rilea REFSSA
*Note - Bathymetric (underwater depth) values depicted in fathoms. 1 fathom = 6 feet
Map Scale = 1:50,000
124°1'3.92"W, 46°9'0.32"N
123°57'52.57"W, 46°9'0.32"N
Center of Area:
123°58'34.577"W 46°6'24.796"N
124°1'3.92"W, 46°5'25.38"N
123°56'23.19"W, 46°5'25.38"N
Warrenton
Skipanon
Approving Authortiy:
Date:
Created By: Carl Anderson
Date: 6/3/2014
Unit:
Phone:
Email:
Legend
Proposed Wave Energy Testing Area- 300m x 300m
Proposed Cable Corridor Options
Potential Option 1 Cable Corridor
Potential Option 2 Cable Corridor
Renewable Energy Facility Suitability Study Area (REFSSA)
Marine Danger Zone (Draft Rule)
Camp Rilea Boundary
Installation: 41C30
0 0.25 0.5 1
Nautical Miles

Rising and setting times for the Sun

(Portland)

Date	Sunrise	Sunset	Length of day This day	Di
Aug 1, 2014	5:55 AM	8:38 PM	14h 43m 52s	
Aug 2, 2014	5:56 AM	8:37 PM	14h 41m 23s	
Aug 3, 2014	5:57 AM	8:36 PM	14h 38m 52s	
Aug 4, 2014	5:58 AM	8:34 PM	14h 36m 20s	
Aug 5, 2014	5:59 AM	8:33 PM	14h 33m 45s	
Aug 6, 2014	6:00 AM	8:32 PM	14h 31m 09s	
Aug 7, 2014	6:02 AM	8:30 PM	14h 28m 30s	
Aug 8, 2014	6:03 AM	8:29 PM	14h 25m 51s	
Aug 9, 2014	6:04 AM	8:27 PM	14h 23m [illegible]	
Aug 10, 2014	6:05 AM	8:26 PM	14[illegible]	
Aug 11, 2014	6:06 AM	8:24 PM	[illegible] 17m 42s	
Aug 12, 2014	6:08 AM	8:23 [illegible]	14[illegible] 56s	
Aug 13, 2014	6:09 AM	[illegible]	14h 12m 09s	
Aug 14, 2014	6:10 [illegible]	[illegible] PM	14h 09m 2[illegible]	
Aug 15, 2014	[illegible]	[illegible]	14h [illegible]	
Aug 16, 2014	13 [illegible]	8:16 PM	[illegible] 0s	
Aug 17, 2014	[illegible]	8:15 PM	14h 00[illegible]	
Aug 18, 2014	6:15 AM	8:13 [illegible]	57m 55s	
Aug 19, 2014	6:16 AM	8:11 PM	13h 55m 01s	
Aug 20, 2014	6:17 AM	8:10 PM	13h 52[illegible]	
Aug 21, 2014	6:19 AM	8:08 PM	13h 49m [illegible]	
Aug 22, 2014	6:20 AM	8:06 PM	13h 46m 12s	
Aug 23, 2014	6:21 AM	8:04 PM	13h 43m 14s	
Aug 24, 2014	6:22 AM	8:03 PM	13h 40m 15s	
Aug 25, 2014	6:24 AM	8:01 PM	13h 37m 15s	
Aug 26, 2014	6:25 AM	7:59 PM	13h 34m 15s	
Aug 27, 2014	6:26 AM	7:57 PM	13h 31m 14s	
Aug 28, 2014	6:27 AM	7:55 PM	13h 28m 12s	
Aug 29, 2014	6:28 AM	7:54 PM	13h 25m 09s	
Aug 30, 2014	6:30 AM	7:52 PM	13h 22m 06s	
Aug 31, 2014	6:31 AM	7:50 PM	13h 19m 03s	

AUGUST 2014

Tide Predictions for Northern Oregon Coast Beaches
Pacific Standard Time

		HIGH TIDE				LOW TIDE			
DATE		TIME	HT (ft)	TIME	HT (ft)	TIME	HT (ft)	TIME	HT (ft)
1	F	[illegible]	[illegible]	**4:55**	6.8	10:18	0.9	**11:05**	1.6
2	S	[illegible]	[illegible]	**5:32**	6.8	10:53	1.3	**11:58**	1.5
3	S	[illegible]	4.9	**6:17**	6.9	11:38	1.9		
4	M	7:34	4.6	**7:12**	6.9	1:02	1.3	**12:34**	2.4
5	T	8:54	4.6	**8:15**	7.0	2:14	0.9	**1:43**	2.7
6	W	10:05	4.9	**9:21**	7.3	3:25	0.4	**2:58**	2.8
7	T	11:07	5.4	**10:24**	7.6	4:27	-0.2	**4:07**	2.6
8	F	12:01	5.9	**11:23**	8.0	5:22	-0.8	**5:10**	2.2
9	S			**12:48**	6.4	6:12	-1.2	**6:08**	1.7
10	S	12:10	6.2	**1:33**	6.9	6:59	-1.4	**7:03**	[illegible]
11	M	[illegible]	6.2	**2:16**	7.3	7:44	-1.4	**7:55**	0.8
12	T	2:06	6.1	**2:59**	7.6	8:27	-1.2	[illegible]	0.4
13	W	2:58	7.2	**3:40**	7.8	9:09	-0.8	**9:39**	0.2
14	T	[illegible]	[illegible]	**4:22**	7.8	9:51	-0.2	**10:32**	0.2
15	F	[illegible]	6.5	**5:06**	7.6	10:36	0.5	**11:29**	0.3
16	S	48	5.8	**5:54**	7.3	11:22	1.2		
17	S	6:55	5.2	**6:47**	7.0	12:31	0.5	**12:16**	1.9
18	M	8:08	4.9	**7:48**	6.7	1:39	0.5	**1:18**	2.4
19	T	9:20	5.0	**8:51**	6.6	2:48	0.5	**2:26**	2.7
20	W	10:23	5.2	**9:51**	6.6	3:52	0.3	**3:33**	2.7
21	T	11:16	5.6	**10:44**	6.7	4:46	0.0	**4:32**	2.5
22	F	**12:01**	5.9	**11:32**	6.8	5:32	-0.2	**5:23**	2.2
23	S			**12:40**	6.2	6:12	-0.3	**6:08**	1.9
24	S	12:15	6.9	**1:15**	6.4	6:47	-0.3	**6:50**	1.6
25	M	12:56	6.9	**1:47**	6.5	7:20	-0.2	**7:19**	[illegible]
26	T	1:34	6.8	**2:17**	6.6	7:50	0.0	[illegible]	1.1
27	W	2:12	6.7	**2:44**	6.8	8:19	0.2	**8:40**	1.0
28	T	2:49	6.5	**3:10**	6.9	8:46	0.5	**9:15**	0.8
29	F	3:28	6.2	**3:37**	7.0	9:14	0.8	**9:50**	0.7
30	S	4:10	5.8	**4:08**	7.0	9:45	1.2	**10:31**	0.7
31	S	4:59	5.4	**4:44**	7.0	10:21	1.7	**11:20**	0.7

Indicates darkness

bold=PM

minus

bold=PM

DEPLOYMENT WINDOW (tentative)

descent windows

Transit/Descent Phase
Aug 14, 15, or 16, 2014

Backup

Regulatory

Army Corps- Nationwide Permit

DSL- Rule Division 140: Demonstration Project

- Temporary Use Authorization
- Territorial Sea Plan Consistency: Part 5
- JART will be triggered

Environmental monitoring

- Will be lead by OSU using plan developed in 2012-2013
- Focus on: Benthic organisms, sediment transport, acoustics, EMF

Monitoring:
- Acoustic
- EMF
- Sediment
- Biological activity
- ROV
- Sonar

Camp Rilea Surface Danger Zone
TSP REFSSA Site
September, 2013
Photo by Mike Morrow
Submerged Wave Energy Converter
M3WAVE.COM
Copyright 2014 M3 Wave
info@m3wave.com
U.S. DEPARTMENT OF ENERGY
ALTMAN BROWNING
RPS Evans-Hamilton
Oregon National Guard
Courage and Commitment
OSU Oregon State UNIVERSITY
NNMREC Northwest National Marine Renewable Energy Center
OregonWaveEnergy TRUST
pacific ENERGY VENTURES
best Oregon Built Environment & Sustainable Technologies Center