I N T E R O F F I C E M E M O

TECHNICAL SERVICES
Bridge Engineering Section
Office Phone: (503) 986-4200
Fax Number: (503) 986-3407

DATE: April 20, 2014

TO: Craig Shike
Bridge Standards Managing Engineer

FROM: Scott Liesinger Phone#: 503-986-4324
Bridge Design Managing Engineer
ODOT

SUBJECT: Proposed Revision to Bridge Design & Drafting Manual

RE: BDDM Section 3.14.4 - Roadway

Problem Statement:

An issue of semantics. Figures 3.14.4.2A, 3.14.4.2B and 3.14.4.2C use the phrase "restricted" clearance. Using the word "limited" in lieu of "restricted" is a better connotation of the condition.

Proposal:

Modify Section 3.14.4 as follows

3.14 Coordination with other Project Team Members [1.1.2.9]

3.14.4 Roadway

3.14.4.1 Project Geometry [1.1.2.1]

Review the project geometry with the Roadway Designer to verify that you have the latest alignment, roadway cross sections, and grades. Some questions to consider:

- Do grades, superelevations, etc., provide enough vertical clearances for the type of bridge anticipated?
- Is the choice of bridge width and horizontal and vertical alignment consistent with traffic volume and type of highway?
- Bridges that are more susceptible to roadway surface icing and have superelevation rates in excess of 0.08 ft/ft are

considered hazardous under those conditions. Use greater rates only if special study has determined that the greater rate is desirable.

3.14.4.2 Roadway Clearances [1.4.8.1]

Clearances required for highway overcrossings are shown in *Figures 3.14.4.2A, A-1, B and C*.

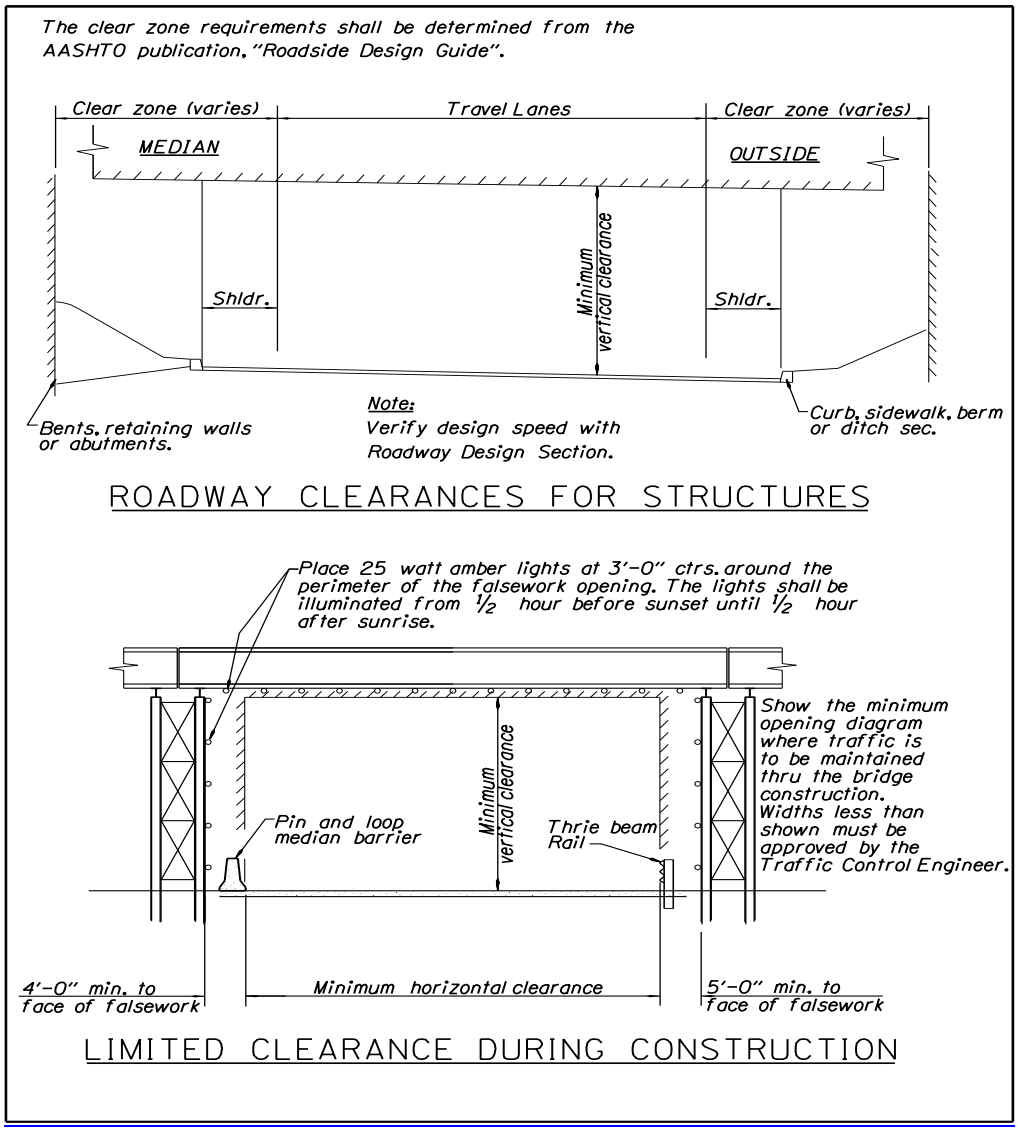

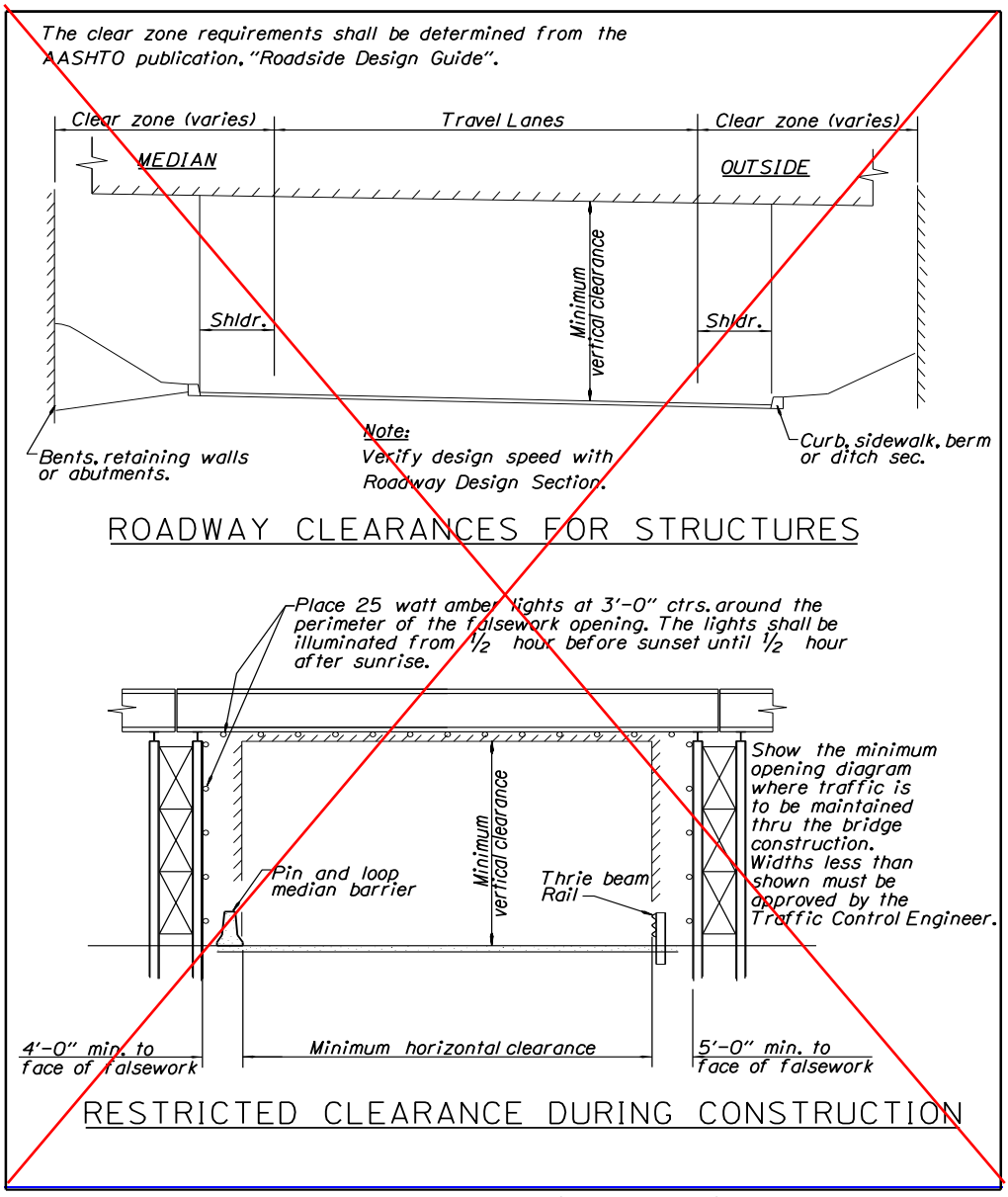

Note: Use 18'-0" min. horizontal clearance for 1 lane (19'-0" for interstate).

Figure 3.14.4.2A

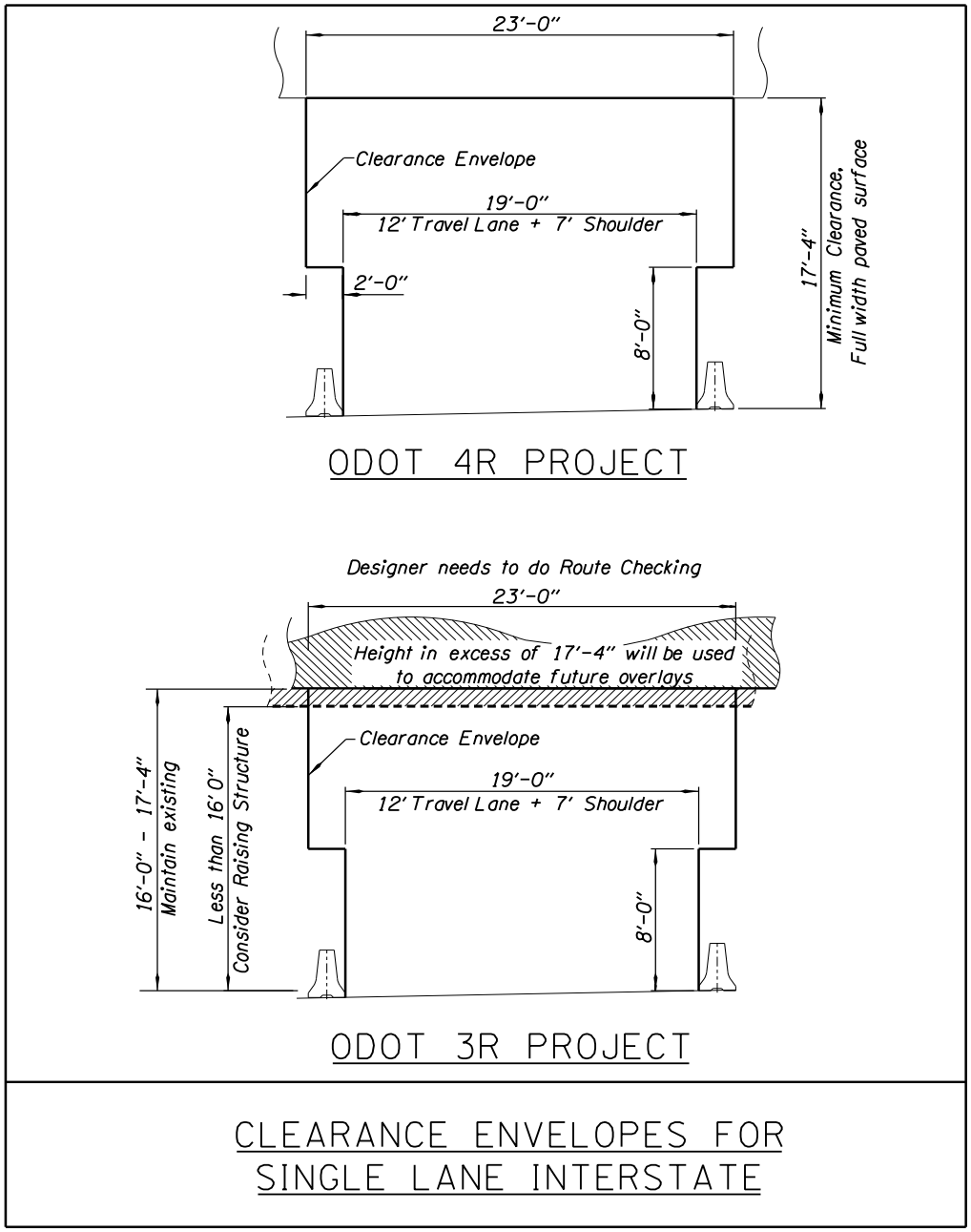

CLEARANCE ENVELOPES FOR
SINGLE LANE INTERSTATE

Figure 3.14.4.2A-1

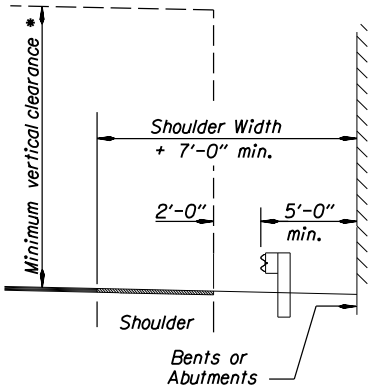

GUARDRAIL AT
BENTS OR ABUTMENTS

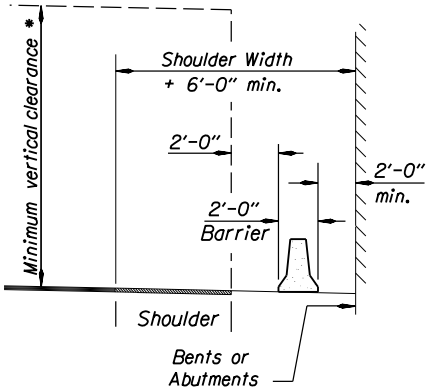

CONCRETE SHOULDER
BARRIER AT
BENTS OR ABUTMENTS

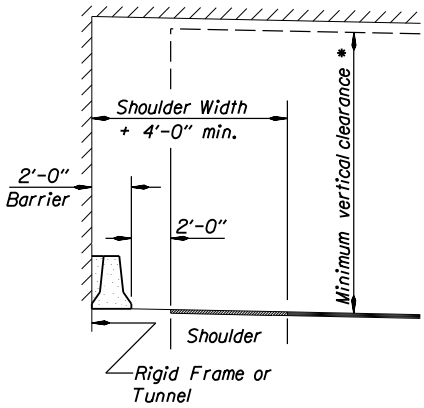

CONCRETE SHOULDER
BARRIER AT
RIGID FRAMES OR TUNNELS

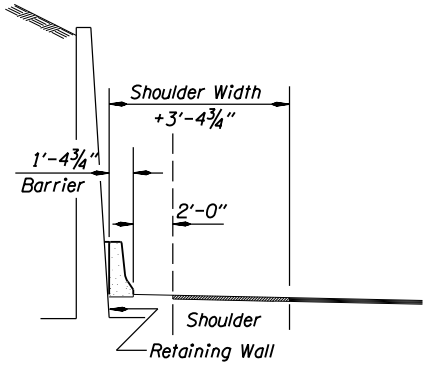

NARROW BASE
CONCRETE BARRIER
AT RETAINING WALLS

LIMITED ROADWAY CLEARANCE FOR STRUCTURES

Note:
Check stopping sight distance when roadway is on a curve.

* *Provide 17'-4" vertical clearance on High Routes.*

Formatted: Font: Not Bold

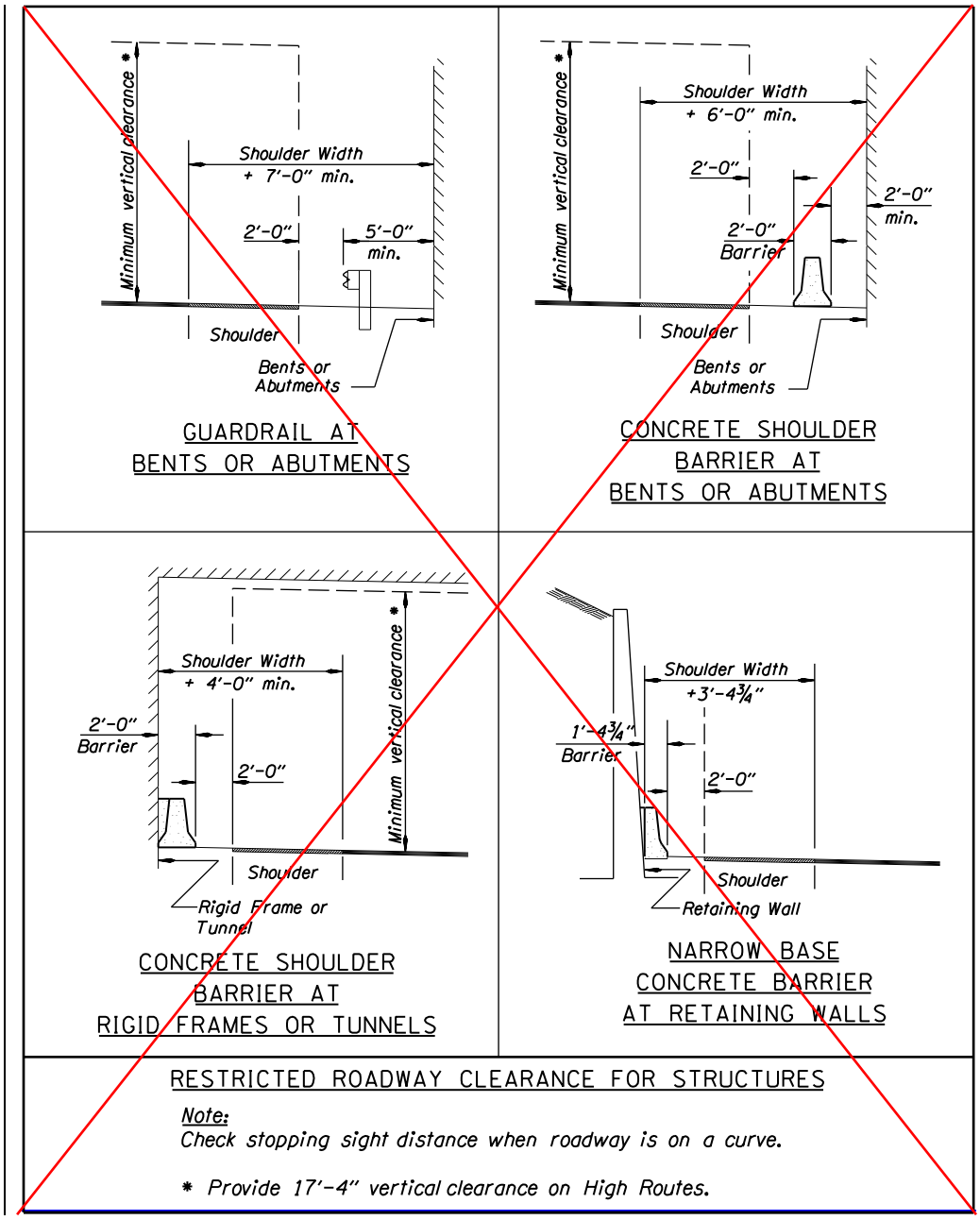

Figure 3.14.4.2B

LIMITED ROADWAY CLEARANCES FOR EXISTING STRUCTURES

Concrete barrier used to protect existing bridge columns with limited clearances shall conform to the following criteria:

CASE 1 - Design shoulder width is not encroached on by placement of concrete barrier.

Place concrete barrier as detailed below:

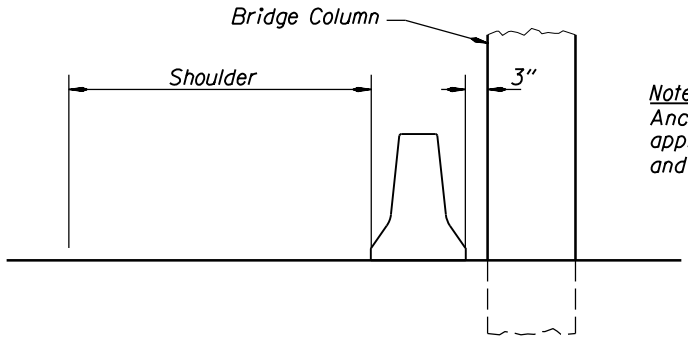

Note:
Anchor first two barrier sections approaching bridge columns and barrier thoughout columns.

CASE 2 - Design shoulder width is encroached on by placement of concrete barrier.

Develop the best solution to protect the bridge column(s). Possible solutions include accepting a narrower shoulder width or using a flat back or a modified barrier design.

Formatted: Font: Not Bold

RESTRICTED ROADWAY CLEARANCES FOR EXISTING STRUCTURES

Concrete barrier used to protect existing bridge columns with restricted clearances shall conform to the following criteria:

CASE 1 - Design shoulder width is not encroached on by placement of concrete barrier.

Place concrete barrier as detailed below:

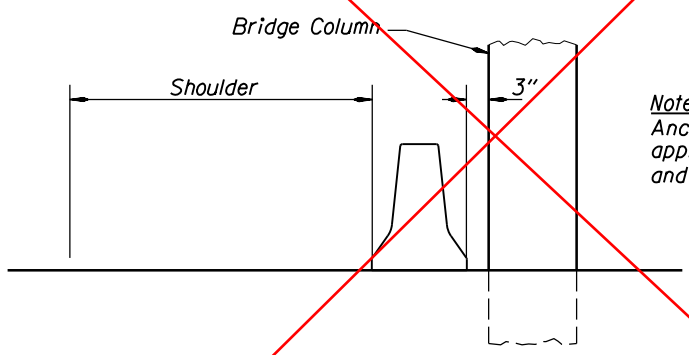

Note:
Anchor first two barrier sections approaching bridge columns and barrier thoughout columns.

CASE 2 - Design shoulder width is encroached on by placement of concrete barrier.

Develop the best solution to protect the bridge column(s). Possible solutions include accepting a narrower shoulder width or using a flat back or a modified barrier design.

Figure 3.14.4.2C

Analysis / Research / Other Supporting Data:

☒ None
☐ Attached:
- [name of attachment]
- [name of attachment]

[and/or enter text here]

Bridge Engineering Section Response:

☐ Accepted for consideration as submitted ☐ Accepted for consideration as noted ☐ Proposal tabled, see Remarks ☐ Proposal not accepted, see Remarks		
Remarks:		
[name of reviewer] Bridge Design Standards Reviewer		Date
Craig Shike Bridge Standards Managing Engineer		Date

Cc: file