TABLE OF CONTENTS

INTRODUCTION

Preface
Record of Revisions
Organization of the Manual
Revising the Manual
Changes to Bridge Design and Drafting Manual 2004

SECTION 1: DESIGN AND DETAILING PRACTICES

1.1 Structure Design and Detailing

1.1.1 Standard Specifications and Standard Drawing Manuals
1.1.1.1 Purpose of the Bridge Design and Drafting Manual
1.1.1.2 Use of Oregon Standard Drawing Details
1.1.1.3 Bridge Security Design Consideration

1.1.2 Fundamental Decisions for Bridge Designs
1.1.2.1 Review of Project Geometry
1.1.2.2 Bridge Length
1.1.2.3 Structure Layout: Spans and Proportions
1.1.2.4 Structure Types and Economics
1.1.2.5 Substructure Choices
1.1.2.6 Bridge Rail
1.1.2.7 Bridge End Panels and Supports
1.1.2.8 Slope Paving / Railroad Slope Protection
1.1.2.9 Other Things to Keep in Mind
1.1.2.10 Special Considerations for Federal-Aid Projects
1.1.2.11 Type, Size, and Location (TS&L) Design
1.1.2.12 Final Design, General

1.1.3 Foundation and Hydraulic Considerations
1.1.3.1 Foundations and Hydraulics, General
1.1.3.2 Lateral Earth Restraint
1.1.3.3 Cofferdams

1.1.4 Foundation Modeling (Foundation Springs)
1.1.4.1 General Modeling Techniques
1.1.4.2 General Procedures and Typical Values
1.1.4.3 Drilled Shaft Modeling (Fully Coupled)

1.1.5 Foundation Design
1.1.5.1 Foundation Design Process
1.1.5.2 Bridge Foundation Records
1.1.5.3 Spread Footing Foundation Design
1.1.5.4 Pile Foundations
1.1.5.5 Drilled Shafts

1.1.6 Underwater Construction
1.1.6.1 Underwater Foundation Design Considerations
1.1.6.2 Footing Embedment
1.1.6.3 Cofferdams and Seals

BACK

1.1 Structure Design and Detailing – (continued)

1.1.7 Loads and Distribution
- 1.1.7.1 Dead Loads
- 1.1.7.2 Live Loads
- 1.1.7.3 Thermal Forces
- 1.1.7.4 Ductility, Redundancy and Operational Importance
- 1.1.7.5 Sidewalk Loading
- 1.1.7.6 Sheer Correction Factor for Skewed Girders

1.1.8 End Bents
- 1.1.8.1 Determining Bridge Length
- 1.1.8.2 Wingwall Location
- 1.1.8.3 Wingwall Design and Construction
- 1.1.8.4 End Bents
- 1.1.8.5 Strutted Abutments
- 1.1.8.6 Pile Cap Abutment Details
- 1.1.8.7 Abutment Details for Prestressed Slabs
- 1.1.8.8 Forming of Backwalls for End Beams
- 1.1.8.9 Bent Joint Details
- 1.1.8.10 Backwall Reinforcement for Post-tensioned Structures
- 1.1.8.11 Beam Seat Drainage
- 1.1.8.12 Reinforced Concrete End Panels
- 1.1.8.13 Bent Width Provisions with Precast Units

1.1.9 Interior Bents
- 1.1.9.1 Interior Bents, Design and Detailing
- 1.1.9.2 Interior Bent Details for Prestressed Slabs
- 1.1.9.3 Structure Widenings, Interior Bents
- 1.1.9.4 Columns in Slopes
- 1.1.9.5 Column Design, General
- 1.1.9.6 Spiral Reinforcing
- 1.1.9.7 Column Steel Clearance in Footings
- 1.1.9.8 Column Hoops
- 1.1.9.9 Vertical Bar Splices
- 1.1.9.10 Optional Hoop Detail at Bottom of Columns
- 1.1.9.11 Footing Reinforcing
- 1.1.9.12 Sloped Footings

1.1.10 Seismic Design
- 1.1.10.1 Seismic Design, General
- 1.1.10.2 Specification Interpretations and Modifications
- 1.1.10.3 Detailing
- 1.1.10.4 Structure Modeling
- 1.1.10.5 Footing/Pile Cap Design
- 1.1.10.6 Liquefaction Mitigation Procedures
- 1.1.10.7 Costs
- 1.1.10.8 Instrumentation
- 1.1.10.9 Dynamic Isolators

1.1.11 Seismic Restrainer Design (New Designs and Retrofits)
- 1.1.11.1 Seismic Restrainer Design, General
- 1.1.11.2 Information for Restrainer Design
- 1.1.11.3 Longitudinal Restrainer Design
- 1.1.11.4 Transverse Restrainer Design
- 1.1.11.5 Hold-downs
- 1.1.11.6 Use of State Stockpile Cable for Seismic Retrofit

BACK

1.1 Structure Design and Detailing – (continued)

1.1.12 Concrete
- 1.1.12.1 Concrete, General
- 1.1.12.2 Concrete Finish
- 1.1.12.3 Concrete Repair (Bonding Agents)

1.1.13 Reinforcement
- 1.1.13.1 Reinforcement, General
- 1.1.13.2 Bar Lengths
- 1.1.13.3 Interim Reinforcement for T-Beams and Box Girders
- 1.1.13.4 Additional Shear Reinforcement
- 1.1.13.5 Diaphragm Beam Steel
- 1.1.13.6 Additional Shear Reinforcement in Longitudinal Girders

1.1.14 Precast Prestressed Concrete Elements
- 1.1.14.1 Design of Precast Prestressed Elements
- 1.1.14.2 Design and Detailing of Precast Prestressed Beams

1.1.15 Cast-in-Place Superstructure
- 1.1.15.1 General Design
- 1.1.15.2 Interim Reinforcement for T-Beams
- 1.1.15.3 Diaphragm Beam Steel
- 1.1.15.4 Box Girder Stem Flare
- 1.1.15.5 Shear Keys and Construction Joints
- 1.1.15.6 Access Holes
- 1.1.15.7 Bottom Slab Details
- 1.1.15.8 Cross Beams
- 1.1.15.9 Fillets
- 1.1.15.10 Structure Widenings
- 1.1.15.11 Stay-in-Place Forms for Deck

1.1.16 Post-Tensioned Structures
- 1.1.16.1 General Design
- 1.1.16.2 General Details
- 1.1.16.3 Post-tensioned Deck Overhangs
- 1.1.16.4 Stress Rod Reinforcement of Bearing Seats
- 1.1.16.5 Segmental Construction
- 1.1.16.6 Support Tower Details and Notes
- 1.1.16.7 Reinforcement of Deck Overhangs
- 1.1.16.8 Post-tensioned Strand Duct Placement

1.1.17 Camber Diagrams
- 1.1.17.1 Camber Diagrams, General
- 1.1.17.2 Precast Slabs and Box Beams
- 1.1.17.3 Precast Beams

BACK

1.1 Structure Design and Detailing – (continued)

1.1.18 Pour Schedules
- 1.1.18.1 Pour Schedules, General
- 1.1.18.2 T-Beams Supported on Falsework
- 1.1.18.3 Box Girders on Falsework
- 1.1.18.4 Drop-in Precast Prestressed Elements
- 1.1.18.5 Continuous Cast-in-Place Slabs on Falsework
- 1.1.18.6 End Bents
- 1.1.18.7 Steel Girders

1.1.19 Bearings
- 1.1.19.1 Elastomeric Bearing Pads
- 1.1.19.2 Proprietary Pot, Disc, Slide, Radial, or Spherical Bearings
- 1.1.19.3 Bearing Replacement
- 1.1.19.4 Reinforced Concrete Bearing Seats
- 1.1.19.5 Unreinforced Bearing Seats (P/S Slabs and Box Beams)

1.1.20 Decks
- 1.1.20.1 Deck Design and Detailing
- 1.1.20.2 Deck Expansion Joint Seals
- 1.1.20.3 Deck Drainage
- 1.1.20.4 Deck Screeding
- 1.1.20.5 Deck Overlays
- 1.1.20.6 Deck Construction Joints

1.1.21 Bridge Rail
- 1.1.21.1 Rail Selection
- 1.1.21.2 Bridge Rail Retrofit Guidelines
- 1.1.21.3 Joints in Bridge Rail
- 1.1.21.4 Temporary Barriers

1.1.22 Drilling Holes in Concrete

1.1.23 Drilled Concrete Anchors
- 1.1.23.1 Materials
- 1.1.23.2 Design
- 1.1.23.3 Plan Details

1.1.24 Anchor Bolts
- 1.1.24.1 Materials
- 1.1.24.2 Anchor Bolt Sleeves

1.1.25 Corrosion Protection
- 1.1.25.1 Marine Environment
- 1.1.25.2 Marine Environment Protection
- 1.1.25.3 Deck and End Panel Reinforcement Protection
- 1.1.25.4 Waterproofing Membranes

BACK

1.2 Steel Structure Design and Detailing

1.2.1 Steel Girders
- 1.2.1.1 Material and Identification
- 1.2.1.2 Shop Lengths of Welded Girders
- 1.2.1.3 Intermediate Cross Frames
- 1.2.1.4 Intermediate Web Stiffeners
- 1.2.1.5 Bearing Stiffeners
- 1.2.1.6 Cross Frames at Bents
- 1.2.1.7 Composite Action and Flange Shear Connectors
- 1.2.1.8 Beam Camber
- 1.2.1.9 Deck Pouring Sequence
- 1.2.1.10 End Bents Detailing
- 1.2.1.11 Expansion Joint Blockouts
- 1.2.1.12 Bearings
- 1.2.1.13 Structure Widenings

1.2.2 Welding
- 1.2.2.1 Welding, General
- 1.2.2.2 Fillet Welds
- 1.2.2.3 Flange Welds
- 1.2.2.4 Welded Web Splices in Steel Bridge Girders

1.2.3 Traffic Structures Mounted on Bridges

1.2.4 Galvanizing
- 1.2.4.1 Processes
- 1.2.4.2 Detailing
- 1.2.4.3 Silicon Control

1.2.5 Cables and Turnbuckles
- 1.2.5.1 Cables and Turnbuckles, General
- 1.2.5.2 General Notes for Cables and Turnbuckles
- 1.2.5.3 Special Provisions for Cables
- 1.2.5.4 Special Provisions for Turnbuckles
- 1.2.5.5 Design Properties

1.2.6 Bolts and Connections
- 1.2.6.1 High Strength Bolts

1.3 Timber Bridge Design and Detailing

1.3.1 Timber Bridge Locations

1.3.2 Timber Design and Details

1.3.3 Timber Connections

1.3.4 Timber Rails

1.3.5 Preservative Treatments

1.3.6 Field Installation

BACK

1.4 Miscellaneous Structure Design and Detailing

1.4.1 Retaining Structures
- 1.4.1.1 Retaining Structures, General

1.4.2 Soundwalls
- 1.4.2.1 Soundwalls, General
- 1.4.2.2 Seismic Load
- 1.4.2.3 Factor of Safety Against Overturning
- 1.4.2.4 Pay Limits for Soundwalls

1.4.3 Impact Attenuators or Crash Cushions
- 1.4.3.1 Attenuator Design
- 1.4.3.2 Chevrons

1.4.4 Safety and Accessibility Requirements
- 1.4.4.1 Uniform Accessibility Standards
- 1.4.4.2 Inspection and Maintenance Accessibility
- 1.4.4.3 Concrete Box Girder Access and Form Removal
- 1.4.4.4 Standard Access and Ventilation in Concrete Box Girders
- 1.4.4.5 Protective Screening

1.4.5 Culvert Design

1.4.6 Bridge Name Plates
- 1.4.6.1 Existing Name Plates

1.4.7 Utilities on Structures
- 1.4.7.1 Utilities on Structures, General
- 1.4.7.2 Providing for Utility Installations
- 1.4.7.3 Detailing Guidelines
- 1.4.7.4 Special Utility Considerations
- 1.4.7.5 Attachments to Existing Structures
- 1.4.7.6 Utility Costs and Agreements

1.4.8 Structure Clearances
- 1.4.8.1 Roadway Clearances
- 1.4.8.2 Railroad Clearances

1.4.9 Bridge Temporary Works
- 1.4.9.1 Introduction
- 1.4.9.2 Temporary Detour Bridges
- 1.4.9.3 Agency Provided Temporary Detour Bridge
- 1.4.9.4 Falsework
- 1.4.9.5 Shoring
- 1.4.9.6 Cofferdams and Seals

1.4.10 Placing Buildings Under O.D.O.T. Bridges

BACK

1.5 Metric Conversion

1.5.1 Introduction

1.5.2 Basic Units
1.5.2.1 Decimal Prefixes

1.5.3 Derived Units
1.5.3.1 Force
1.5.3.2 Stress
1.5.3.3 Energy

1.5.4 Metric Conversion Factors

1.5.5 Metric Procedural Rules
1.5.5.1 Writing Metric Symbols and Names
1.5.5.2 Writing Numbers
1.5.5.3 Conversions and Rounding

1.5.6 Bridge Plan Preparation Guidelines
1.5.6.1 Plan Dimensions
1.5.6.2 Reinforcing Steel
1.5.6.3 Fasteners
1.5.6.4 Structural Steel

1.5.7 Miscellaneous Common Conversions

1.6 ODOT Design Instructions for AASHTO LRFD Bridge Design Specifications

Appendix - A : Typical Details

Appendix - B : Glossary, Abbreviations

SECTION 1: DESIGN AND DETAILING PRACTICES

Note: Revisions for April, 2007 are marked with yellow highlight and double underline. A short yellow highlight only indicates deleted text.

1.1 STRUCTURE DESIGN & DETAILING

1.1.1 Standard Specifications and Standard Drawing Manuals

- For design of vehicular, pedestrian, and bicycle bridges: *LRFD Bridge Design Specifications* (4th Edition 2007) published by the American Association of State Highway and Transportation Officials (AASHTO).

- For design of bridges carrying railway traffic: pertinent sections of the *Manual for Railway Engineering* of the American Railway Engineering and Maintenance-of-Way Association (AREMA) (formerly AREA) as modified by the individual requirements of each railroad company.

- For all construction except bridges carrying railways: *Oregon Standard Specifications for Construction*, published by ODOT and pertinent special provisions.

- *Oregon Standard Drawings,* published by Oregon Department of Transportation, Standards Engineer.

1.1.1.1 Purpose of the Bridge Design and Drafting Manual

The purpose of this Bridge Design and Drafting Manual (BDDM) is to provide guidance for those who prepare bridge plans and specifications for ODOT. It supplements and in some cases modifies the AASHTO LRFD Bridge Design Specifications. It also contains standardized details and design methods that have been developed from years of successful bridge building in the state of Oregon. Consistent use of these details and methods will result in long-lasting and economical bridges for Oregon.

Since the bridge design field is an art that is constantly changing, it is understood that designers will occasionally want to use innovative details or methods that may differ substantially from those contained in this manual. Designers having experience in other states may also want to introduce details and methods which have worked well in those states.

Submit a request for a design deviation to the State Bridge Engineer before replacing an established detail or method from this manual with a new or unusual detail or method. This requirement is not intended to inhibit innovation or the ability of the designer to exercise good engineering judgment. On the contrary, it is intended to allow good innovative ideas to be used and to potentially become part of this manual.

BACK

1.1.1.1 Purpose of the Bridge Design and Drafting Manual - (continued)

Design Deviation – The request should include an explanation of the issues, a brief description of the project, a justification for the deviation, and any supporting documents. The request may be submitted by e-mail. A deviation request form is available on the ODOT Bridge Engineering web site which may be used but is not mandatory. Send deviation requests to:

Bruce Johnson, State Bridge Engineer bruce.v.johnson@odot.state.or.us , and
Kevin Davidson, Bridge Standards and Practices Engineer kevin.f.davidson@odot.state.or.us

The request will be distributed and evaluated by the BDDM technical specialists, and a response will be returned by e-mail as soon as possible.

Technical Bulletins – From time to time, technical issues arise between scheduled BDDM updates which require urgent distribution of guidance to the design community. These are handled by Technical Bulletins. Check the ODOT Bridge Engineering web page for status of Technical Bulletins.

1.1.1.2 Use of Oregon Standard Drawing Details

The standard drawings prepared by ODOT have been developed through a long history of collaboration with Oregon contractors and fabricators. Oregon standard drawings should be used without significant change. Where a significant change to a standard drawing is needed, submit a design deviation request to the State Bridge Engineer.

Where an equivalent ODOT standard drawing or detail exists, do not use standard drawings or details from another state or agency without approval of a design deviation from the State Bridge Engineer.

1.1.1.3 Bridge Security Design Considerations

Potential bridge security threats include “carried and placed” bombs, vehicle bombs, intentional vehicle or ship collisions, intentional fires, and other intentional and unintentional threatening activities. This section tells when and how to consider potential bridge security threats during the design of:

- New bridges.
- Bridge widening.
- Bridge rehabilitation projects.

Deter, Deny, Detect, Defend

Countermeasures can help protect bridges against potential security threats. The four countermeasures to protect structures are to deter, deny, detect, and defend.

Deter: Prevent an aggressor from attacking the bridge by making the security presence known such as police, or other authorized personnel.
Deny: Prevent an aggressor from entering an unauthorized zone by a physical barrier such as security fencing, secure hatches and locked doors.
Detect: Observe unauthorized personnel in a restricted area by means such as cameras, and sensors.
Defend: Hardening measures to protect a component from attack.

BACK

1.1.1.3 Bridge Security Design Considerations – (continued)

All Structures

Public access to any bridge should be limited to the traveled way. Ideas to consider include:

- Locate box girder access openings away from abutments so the soffit requires a ladder or other mechanical means to gain access
- Provide shielded locking mechanisms on all access openings.
- Place secure screens at soffit vents near abutments.
- Prevent access to girder flanges and maintenance walkways at abutments.
- Post warning signs on the bridge approaches and below the structure.
- Deny access to critical structural components.
- Establish guidelines for standoff distance
- Eliminate access to small confined spaces.

Critical Structures

Some bridges, due to their complex and unique nature, will require project-specific countermeasures along with those countermeasures that apply to all bridges. These are bridges considered "critical" to the transportation network. The most critical bridges will also require site-specific operational security plans. The ODOT Emergency Preparedness Committee identified critical bridges and their potential vulnerabilities. To find out more, contact the Statewide Emergency Operations Manager in the ODOT Office of Maintenance and Operations.

The need for security countermeasures should be considered during the project scoping phase, to ensure that added costs are included in the project budget. Countermeasures and security plans should be defined and included no later than the Type, Size and Location submittal. The Project Design Team should consult with the Headquarters Bridge Engineering Section for security guidance and to maintain consistency statewide.

If the State Bridge Engineer decides a critical bridge needs specific mitigation measures, consider these strategies first:

- Locate piers and towers so vehicular access is prevented
- Design redundancy with critical elements.
- Place barriers to provide **standoff distance** when critical structural elements cannot be located away from vehicular traffic. If this cannot be achieved, the critical structural member or mechanical system should be analyzed and hardened against the design threat.
- Install locks, caging and fencing to **deny access** to key points of vulnerable structural and mechanical systems.
- Install motion detectors or security cameras and plan for communications to security response entities to **minimize "time-on-target."**

Next, when cost-effective, consider selective protection of the structural integrity of key members against collapse. Ways to do this include strengthening key substructure members, adding redundancy, and use of blast hardening.

Again, project-specific countermeasures should only be considered for those structures which ODOT management decides need specific attention during the design phase.

BACK

1.1.2 Fundamental Decisions for Bridge Designs

1.1.2.1 Review of Project Geometry

Review the project geometry with the Roadway Designer to verify that you have the latest alignment, roadway cross sections, and grades. Some questions to consider:

- Do grades, superelevations, etc., provide enough vertical clearances for the type of structure anticipated?
- Is the choice of bridge width and horizontal and vertical alignment consistent with traffic volume and type of highway.
- Structures are more susceptible to roadway surface icing and superelevation rates in excess of 0.08 ft/ft are considered hazardous under those conditions. Use greater rates only if special study has determined that the greater rate is desirable.

1.1.2.2 Bridge Length

(1) General - Determine the bridge length by referring to the following as applicable:

- Section 1.1.8.1, "Determining Bridge Length".
- Bridge Standard Drawing BR115, "Standard Slope Paving".
- Project requirements for wildlife passage that may add structure length.
- Following Subsections (2) through (5).

(2) Waterway Openings and Hydraulic Requirements for Stream Crossings - Refer to the *Hydraulics Report* for design recommendations. If it is not available yet, consult with the Hydraulic Designer for preliminary guidance and any field data.

With respect to design floods and analysis, the standard design flood for bridges on Interstate Highways is 50-year and for other highways is 50-year or 25-year depending on their traffic volume. Designated FEMA floodway projects are designed for 100-year floods, and if any structures, walls, or fills encroach on a floodway area, you will need to contact the Hydraulics Unit for comments and requirements.

The *Hydraulics Report* may recommend a waterway opening capacity of less than a 50/25-year design flood for a local agency bridge. The Hydraulics Unit will have contacted the agency for future plans to raise the road and, if the road will be raised, determined that the hydraulic design is satisfactory and the overtopping flood is less than a 25-year flood.

The waterway opening under a bridge must be capable of passing the design flood with clearance to design high water according to the following:

- Width of waterway opening is measured normal to stream flow. The waterway area is the normal channel area below the design flood high water elevation. Minor channel cleanup and modification is acceptable, but major lowering of the streambed under the bridge to increase the opening is not only ineffective but unacceptable.
- The *Hydraulics Report* will recommend the minimum bottom-of-beam elevation. Normally, a minimum bottom-of-beam clearance of 1 foot is provided above

BACK

1.1.2.2 Bridge Length - (continued)

- the design flood elevation. The exception would be for county and city bridges whose approaches are overtopped more frequently than once every 10 years. The minimum bottom-of-beam elevation provided for these situations is 1 foot above the 10-year design flood elevation. Large amounts of drift or ice flows may require more clearance. If practical, 1 foot of clearance above the 100-year elevation is provided.

- Under rare circumstances such as a park setting or where other controls on grade lines make it necessary, high water above beam bottoms or over the deck may be allowed.

- Ordinarily, the design flood should not overtop the adjacent roadway. When the roadway over topping flood is less than the design flood, the overtopping flood becomes the design flood.

(2) Waterway Openings and Hydraulic Requirements for Stream Crossings - (continued)

If there are no future plans to raise a roadway to eliminate overtopping, a combination of bridge waterway opening and overtopping at the low points of adjacent roadway may be an acceptable alternate to accommodating the entire stream flow under the bridge. For Interstate Highways, the minimum overtopping frequency is 50 years.

Roadway overtopping at lesser recurrence intervals than the 50/25 years is acceptable and allowable in certain circumstances such as:

- Other roads in the area are overtopped.

- Traffic counts are low.

- Alternate routes are available.

- Road is useable when overtopped (shallow overtopping).

- The required bridge would be excessively long or high and a review is made of the effect of backwater and overflow on adjacent properties and facilities.

(3) Scour Evaluation - The *Hydraulics Report* will present the results of the scour analysis. The scour analysis will include analysis on possible long term changes in the channel bottom elevation due to either aggradation or degradation, possible shifts in channel alignment, contraction scour and local pier scour. Abutment scour is not calculated. Scour depths are typically calculated for both the 100-year and 500-year events. However, if the incipient roadway-overtopping flood ($Q_{overtopping}$) can occur, it is usually the worst case for scour because it will usually create the worst scour conditions at the bridge site (greatest flow contraction and highest stream velocity).

Therefore, for all bridges scour depths are calculated for the following flood conditions depending on the recurrence interval for the overtopping flood:

- $Q_{overtopping} > Q_{500}$: Both the 100-year and 500-year flood scour depths are analyzed

- $Q_{100} < Q_{overtopping} < Q_{500}$: The 100-year flood and the overtopping flood scour depths are analyzed

- $Q_{overtopping} < Q_{100}$: Only the overtopping flood scour depth is analyzed

1.1.2.2 Bridge Length - (continued)

For the 100-year flood (or overtopping flood if it is more frequent), the stability of the bridge design should be checked to provide a minimum geotechnical resistance factor of 0.70 (Factor of Safety of approximately 2.0). For the 500-year flood (or overtopping flood if it controls) the bridge stability should be checked with a geotechnical resistance factor of 1.0. The *Hydraulics Report* will give the scour elevations for each of these conditions or for the overtopping flood if applicable.

Only the scour due to long term stream bed degradation is included in the seismic design of the bridge (Extreme Event Limit I).

(4) Width and Cross Section of Lower Roadway - For horizontal clearances, see Section 1.4.8.1. Choose your back-slopes as follows:

- Use 2:1 end fill slopes for all bridges unless the Foundation designer recommends otherwise.
- 1.5:1 end fill slopes are common for county roads and less-traveled highways. Review the ODOT *Highway Design Manual* Figure 4-1, "Standard Sections for Highways Other Than Freeways", but do not use a slope steeper than 2:1 unless a steeper slope is recommended in the Foundation Report.

(5) Stock Paths at Stream Crossings - Normally, provisions for stock to cross the roadway should be located away from the bridge crossing to prevent pollution of the stream. However, if a stock path running under the bridge parallel to the stream is required, additional bridge length will be needed to accommodate:

- Sufficient horizontal space and vertical clearance to construct a benched section for a path above ordinary high water.
- A fence to keep stock out of the stream.

Stock passes are also discussed in the ODOT *Highway Design Manual*.

(6) Clearances and Cross Sections for Railroad Crossings - See Section 1.4.8.2.

1.1.2.3 Structure Layout: Spans and Proportions

(1) Column Locations - Column locations, which of course affect span lengths, are subject to clearance requirements of Section 1.4.8.1, AASHTO standard clearances, or by hydraulic considerations. After these conditions are met, spans lengths may also be governed by environmental issues, economics and aesthetics. Consider alternate structure types to best fit the needs of the site.

If columns are located in the median of a divided highway and within the clear zone as determined by the Roadway Designer, they must be protected from traffic by a guardrail or concrete barrier. See Section 1.6 for column loading criteria for vehicular impact, depending on type and location of barrier used (ODOT Instructions for AASHTO LRFD 3.6.5).

Check with the Roadway Designer about which barrier will be used. It will affect the bridge's appearance and may influence the type of column selected.

1.1.2.3 Structure Layout: Spans and Proportions - (continued)

Earth Mounds are no longer an acceptable method of column protection. At this time, however, existing earth mounds do not need to be removed.

When locating columns and span configurations, consider the effects of columns in waterways. Consider the possibility for scour or difficulty in inspecting a column that is in the highest flow area of a river. Avoid placing the column directly in the middle of the river.

(2) Structure Depth - Structure depth, also referred to as superstructure depth, is generally controlled by span length and clearance limitations. Although a minimum depth structure may be aesthetically appealing, it may not be the optimal solution for the site.

For steel superstructures, use the minimum depth recommended in AASHTO LRFD Table 2.5.2.6.3-1 for estimating purposes. For concrete superstructures, use the minimum depths given below:

Reinforced Concrete Superstructures:

Balanced 3-span cast-in-place slabs with main reinforcement parallel to traffic	d = .542 + S/48
T-Beams	d = S/19
Box Girders, constant depth	d = S/21
Box Girders, with haunch = 1.5 d to 1.75 D	d = S/25

d = depth of constant depth members or depth at midspan of haunched member.

S = length c -c of bents or longest span of a continuous bridge.

Depths shown for slabs and T-beams are for constant-depth sections. Depth may be reduced 15 percent for beams with continuous parabolic haunches or with straight haunches equal to 1/4 the span where the total depth at the haunch is 1.5d.

Increase depths for simple span bridges by 10 percent.

BACK

1.1.2.3 Structure Layout: Spans and Proportions - (continued)

Post Tensioned Box Girders:

Use the following minimum depths in place of those recommended by AASHTO LRFD Table 2.5.2.6.3-1:

simple span	d = S/26
continuous, uniform depth	d = S/29
cont with min. haunch = 1.5d	d = S/35

Precast Prestressed Concrete Superstructures:

Slabs and Boxes	d = S/33
Bulb-I and Bulb-T girders	d = S/23

Depths shown for Bulb-I and Bulb-T girders may be reduced up to 15% for haunched girders made continuous. If so, provide either continuous parabolic haunches or straight haunches equal to ¼ the span with a total depth at the haunch at least 1.5d.

Where minimum depth requirements, given above, are satisfied, the optional live load deflection criteria in AASHTO LRFD Section 2.5.2.6.2 will not be required. When minimum depth requirements are not satisfied, verify the live load deflection does not exceed the limits recommended in AASHTO LRFD Section 2.5.2.6.2.

When both minimum depth and live load deflection requirements are not satisfied, submit a request for a design deviation to the State Bridge Engineer. As justification for the request, document girder and deck service stress levels, live load deflection, and provide evidence of similar structures already in service with satisfactory performance.

(3) Girder Spacing - Girder spacing is normally dependent on girder capacity. Generally, girder spacing for concrete girders should not exceed 9 feet. As span length increases, girder spacing should decrease. Deck overhangs should be no more than one-half the girder spacing. Long deck overhangs, even if the deck is post-tensioned transversely, tend to sag over time.

BACK

1.1.2.4 Structure Types and Economics

(1) General - Structure type is generally the most important factor influencing bridge costs. (Substructure considerations are typically second, although there can be exceptions.) Each project site is unique and should be evaluated for conditions that alter the usual cost expectations. For the following discussion, structure type generally means classification of superstructure spans by construction material and method of construction.

As can be determined from the Bridge Section's annual *Structure Cost Data* books, structure types in order of increasing costs are as follows:

Structure Type	Span Range
Precast concrete slabs	up to 70 feet
Precast concrete box beams	up to 120 feet
Cast-in-place concrete slabs	up to 50-66-50 feet
Precast integral deck concrete girder	up to 130 feet
Precast concrete girder	up to 140 feet
Cast-in-place box girder	*
Cast-in-place post-tensioned box girder	*
Steel girder	*
Steel truss	*

*Normally used for longer, multi-span continuous bridges.

Timber bridges up to 30' of length may be considered for special situations. (See Section 1.3.1, 'Timber Bridge Locations".) The cost of a timber bridge may be more than a concrete bridge of the same length.

Do not use cast-in-place concrete slabs with any span greater than 66 ft. Cast-in-place concrete slab superstructures have significant dead load deflections. Even if actual deflections match estimated deflections, it will likely take 10 to 15 years for creep deflection to diminish. For longer span lengths, the ride quality would be unacceptable while waiting for the creep deflection to happen.

Do not use voids in cast-in-place concrete slab superstructures. Although such designs are effective at reducing the structure weight and dead load deflections, it is very difficult to secure the voids in the field. The potential for failure is unacceptably high.

When cast-in-place slabs are used, ensure the edge beam requirements given in sections 4.6.2.1.4, 5.14.4.1 and 9.7.1.4 in the LRFD Bridge Design Specifications are met.

Where a design deviation is approved by the State Bridge Engineer for use of voids in a cast-in-place concrete slab superstructure, apply the edge beam requirements listed above to this type of structure.

Use HPC concrete in cast-in-place concrete slab superstructures. Place concrete full-depth of the slab (i.e., no horizontal construction joints). For cast-in-place slab superstructures having any span greater than 40 ft, apply a deck sealer product (from the QPL) at least 60 days after placement of the slab.

BACK

1.1.2.4 Structure Types and Economics - (continued)

(2) Precast Concrete Versus Cast-in-Place Concrete - Formwork is the key to concrete structure costs. Use of standard forms or repeated use of specially built forms means lower costs. For smaller bridges in remote areas, precast or shop-fabricated elements usually lead to the most economical solution.

Precast concrete slabs have the following pluses:

- Good for shorter stream crossings, low-volume roads, and remote locations.
- No falsework required in roadway or stream.
- Fast, simple installation, saving construction time.
- Shallow depth providing greater clearance to stream or roadway surfaces below.

However, they have problems with:

- Providing smooth riding surfaces. (AC wearing surface is required to level up except for low-volume roads.)
- Accommodating horizontal curves, gradelines, or superelevations. (Thickness of AC wearing surface to accommodate superelevation can become excessive.)

Precast concrete box beams, girders, and integral bulb-T beams have most of the same good and bad points that the precast slabs do. They can accommodate longer spans, but they do have deeper depths resulting in less clearance to stream or roadway surfaces below.

In general, cast-in-place concrete spans are a good choice:

- For longer spans.
- For accommodating horizontal curves, gradelines, or superelevations.

However, three drawbacks are:

- Falsework is required.
- Falsework in the roadway below a grade crossing creates traffic hazards.
- Settlement of falsework before post-tensioning begins is a potential problem.

(3) Continuous Steel Span Bridges - Steel construction extends the span length range and usually does not require falsework in the roadway or stream.

(4) Bridge Widening - Generally, the same type of construction that matches the existing bridge should be used for the widened portion.

(5) Design Criteria for Major or Unusual Bridges – Some elements of design criteria for major and unusual bridges may not be appropriate for normal bridges and may be dependant on the location and expected service level. For those bridges the design criteria will be established specifically for each structure in a collaborative effort between ODOT Bridge Section and the applicable Tech Center. Early coordination is required to allow time to establish the design criteria. For this purpose unusual bridges are those that the Tech Center determines to have: (1) difficult or unique foundation problems, (2) new or complex designs with unique operational or design features, (3) bridges with exceptionally long spans, or (4) bridges being designed with procedures that depart from currently recognized acceptable practices. Examples of unusual bridges include cable-stayed, suspension, arch, segmental concrete, movable, or long span truss bridges. Other examples are bridge types that deviate from ODOT or AASHTO bridge design standards, or AASHTO guide specifications for highway bridges; and bridges requiring dynamic

BACK

analysis for seismic design; bridges using a three-dimensional computer analysis; bridges with spans

1.1.2.4 Structure Types and Economics - (continued)

exceeding 152 m (500 feet); and bridges with major supporting elements of "ultra" high strength concrete or steel. New or major rehabilitation of tunnels also require special design standards. ODOT Bridge Section will assist in the review of major or unusual projects at the request of the Tech Center, or Local Agency. Early coordination is requested.

(6) Maintenance and Provisions for Inspection of Bridges –

1. Formal constructability and maintainability reviews by the designer, checker and reviewer are required for most bridges to determine the practicality and feasibility of erection/construction of the structure as assumed in the design as well as adequacy for future maintenance.

2. An inspection and maintenance guide for the future operation of each major or unusual bridge is required along with the development of design and construction plans.

3. Consideration should be given in the design for the possibility of future bearing replacement. Replacement of bearings implies the use of jacks to lift the superstructure off the permanent bearings. The position of these jacks, and allowable jack loads should be indicated on the drawings. The distribution reinforcement to accommodate the jack loads should be provided in the top of the piers and the soffit of the superstructure. Further, the transverse analysis of the superstructure should consider the relocation of reactions when the jacks are engaged to replace the permanent bearings.

1.1.2.5 Substructure Choices

(1) Type of Foundation and Scour Protection - Read the *Foundation Report* for information and recommendations about type of foundation required, or talk to the Foundation Designer if the *Foundation Report* is not yet available. For stream crossings, recommendations for scour and riprap protection are contained in the *Hydraulics Report*.

Chapter 2, "Designing Bridges to Resist Scour" of FHWA's *Evaluating Scour at Bridges* (HEC-18) is a helpful reference available from the Hydraulics Designer or from the FHWA web page.

(2) Abutments and Bents – Section 1.1.8 has useful information to guide preliminary bent and wingwall layout.

1.1.2.6 Bridge Rail

Turn to Section 1.1.21 for discussion about design and selection of bridge rails. If you are working with a grade separation, a criterion for using protective screening is in Section 1.4.4.5.

BACK

1.1.2.7 Bridge End Panels and Supports

Provide reinforced concrete bridge end panels for Interstate and State highway bridges. Counties, cities, or other agencies can choose whether or not to include them in their projects.

When end panels are required, show the general outline of them on the bridge plans with reference to the panel details shown on Bridge Standard Drawings or detail plans.

In regards to end panel supports:

- Detail ledges or other methods of support for all bridges (including those of other agencies), even through end panels are not called for when the bridge is built.
- Provide bridges that have sidewalks with a method of supporting approaching sidewalks at the bridge ends (present or future) if no end panel extends into the walk area.

The required width of the end panel depends on the following considerations:

- If the approach rail is a flex-beam rail, the end panel width is inside face to inside face of the flex-beam rails at the end of the bridge. If the rail posts are attached to the side of the panel, the end panel width is the distance between inside faces of the rail posts.
- Where the approach rail is a concrete barrier, the barrier will generally be supported by the end panel and the end panel width is equal to the out-to-out dimension of the barriers at the end of the bridge. Add 1 foot each side to the end panel width where the barriers are precast.
- Supporting barriers on wingwalls (rail cast with wingwall) is not recommended because water leaks into the subgrade along the wall.

Use a nominal end panel length of 30 feet if any of the following conditions exist:

- On interstate highways and all other state highways with 20-year projected ADTT > 1000.
- When end bents are skewed > 30 degrees.
- When abutment depth is > 20 ft (from bottom of footing or cap to top of deck).
- When end fills have an anticipated post-construction settlement > 1 inch.

When none of the above conditions are satisfied, use a nominal end panel length of 20 feet.

Note: ADTT = ADT x %trucks. The 20-year ADT volume should be in the project prospectus. The % trucks can be determined by locating the nearest Permanent Automatic Traffic Recorder (ATR) station. This information is kept by the Transportation Data Section under the Transportation Development Division and can be found at the following website:

http://egov.oregon.gov/ODOT/TD/TDATA/tsm/tvt.shtml

1.1.2.7 Bridge End Panels and Supports - (continued)

From this website, go to "Permanent Automatic Traffic Recorder Stations (ATR's) Trend Summaries" and select the latest year.

If a prospectus is not available, if the 20-year ADT is not shown and/or if an appropriate ATR cannot be found, contact the Project Leader or Contract Administrator.

Asphalt concrete wearing surface (ACWS) should normally be used on the end panel when the approach is asphalt concrete. If the end panel settles, compensating overlays can be easily feathered onto the existing ACWS. Concrete strength in end panels should be called out in the General Notes.

End panels may be deleted under certain unique conditions. A geotechnical and structural evaluation is required for considering the deletion offend panels and approval of a deviation from standard ODOT BDDM practice is required. The final decision on whether or not to delete end panels shall be made by the ODOT HQ Bridge Section Engineer with consideration to the geotechnical and structural evaluation.

1.1.2.8 Slope Paving/Railroad Slope Protection

Generally, where a roadway passes under a bridge, provide slope paving on the bridge end fill according to Bridge Standard Drawing BR115. Also, consider slope paving where a bridge crosses over a sidewalk or park.

For a highway bridge crossing over a railroad, rock slope protection may be required on the end fill slope under the bridge.

1.1.2.9 Other Things to Keep in Mind

In this section:

(1) Structure Appearance and Aesthetics
(2) Traffic Handling and Data
(3) Bikeways
(4) Protection of Recreational/Cultural Resources
(5) Right-of-Way
(6) Utilities
(7) Use of Salvage Materials

(1) Structure Appearance and Aesthetics

Keep in mind the structure appearance with respect to its surroundings and the context of the site.

Generally for bridges, appearance is best when elements are few and simple.

Aesthetics and environmental considerations may have apparent conflicts. Historic or environmental issues may impact the bridge rail type, structure configuration, type of foundation or bent placement. Start the permit application and coordination process for historic structures as early as possible in the design stage. Aesthetics concerns, especially within an existing documented site context, are valid issues that can and should impact resource agencies permitting considerations.

BACK

1.1.2.9 Other Things to Keep in Mind - (continued)

Bridge elements are pleasing when the structural intent is clear with respect to the size and shape of the element. Elements forced into a non-structurally responsive shape for decoration are not considered pleasing aesthetically and may be a significant distraction and a safety hazard. Decorations on bridges that are not part of the structural support system may not be maintained to the same level as the structural portions of the bridge unless a separate IGA is executed with a local agency for maintenance.

ODOT has no general directive or mandate on aesthetics or aesthetic design. This section is a guideline to generally accepted practice.

There is a misconception that improving appearance always costs more. This is not necessarily true. The challenge to the engineer is to use creativity and ingenuity to improve the appearance without increasing cost. When people think that improved appearance is going to add costs, they are generally thinking in terms of add-ons, special ornamental features or special colors. The greatest aesthetic impact can be made by the structural elements themselves. These are seen first, and at the greatest distance. The bridge can be made attractive if these major elements are well shaped, and if they fit in well with the surroundings.

The following topics are commonly known to assist in producing visually pleasing structures. They are discussed in more detail in the following sub-sections.

- Location and surroundings
- Horizontal and Vertical Geometry
- Superstructure Type and Shape
- Bent Shape and Placement
- End bent Shape and Placement
- Parapet and Railing Details
- Colors
- Textures
- Ornamentation

LOCATION AND SURROUNDINGS

When determining the appearance of a bridge, the bridge must be considered in context with its surroundings. Decisions need to be made regarding what color, shape and type of bridge will look best at a given location. The surrounding area may be industrial, urban, or rural. A bridge that looks pleasing in a rural setting may look totally out of place in an urban area.

Individual bridges that span a major land area or body of water, because of their large size, dramatic location, and carrying capacity, will tend to dominate their surroundings. While these structures must harmonize with the surroundings, their importance and size requires that the aesthetic qualities of the structure stand on their own. Multiple bridges seen in succession create a cumulative aesthetic impact on the landscape that must be considered. In these situations, there is more reason for uniformity, and there should be no noticeable differences between structures, without an obvious reason. A specific theme for a particular route, such as a parkway, is often appropriate.

Routine bridges, such as highway overpasses and stream crossings, should be simple, with minimal changes, and with all of the elements in clear relationship with one another. Since many of these bridges are viewed in elevation by those traveling on a roadway below, the structure type, span lengths, and proportions, as viewed in elevation, should be carefully considered.

Bridges that are infrequently viewed, such as those on lightly traveled roadways, are rarely seen by anyone. In these cases, attention to the elements that can be seen from the roadway surface such as parapets, railings, transitions, and road surface, are important.

1.1.2.9 Other Things to Keep in Mind - (continued)

HORIZONTAL AND VERTICAL GEOMETRY

Geometric design standards often dictate the orientation of a bridge. The emphasis is on the need for safe, convenient driving and providing a more attractive highway system. Bridges must adapt to the highway alignment. Thus, they often lie within the curvature of the road and follow the slopes or curvature in elevation. Large curvature is not only desirable from a safety standpoint, but also for aesthetics.

With skewed structures, when it is necessary to orient the substructure parallel to the feature crossed, a wide bridge presents a greater visual impact. The use of natural surfaces that blend in with the surrounding environment may lessen the visual impact. Bents and end bents in waterways that lie parallel to the river's banks look better than those placed perpendicular to the crossing road.

If an alignment requires a curved bridge, then the external longitudinal lines, traffic barriers, and fascia lines of the structure should follow the curved centerline to provide a smooth visual flow. A smooth transition helps the structure fit in with the local topography. Parallel lines should be maintained by matching barrier, sidewalk, curb and fascia depth across the structure.

SUPERSTRUCTURE TYPE AND SHAPE

The appearance of a bridge is greatly influenced by different aspects of the superstructure. These include the superstructure type, depth, overhang width, number of spans, and span lengths. One way to make the structure light and slender, without making it appear weak and unsafe, is to use a favorable visible slenderness ratio (the ratio of span length to the visible structure depth, including the decking and any concrete traffic barrier or steel railing). The typical visible slenderness ratio will vary from approximately 10 to 40 depending on the type of superstructure chosen.

A girder depth that is too shallow gives the appearance that the bridge is not structurally safe. A girder that is too deep makes the bridge look bulky and overpowering. Bridges with a well-proportioned slenderness ratio denote strength without excessive materials.

An additional guideline that enhances the appearance of multiple spans is to avoid changing girder depths from one span to another. This would give a very awkward appearance and would not allow the structure to flow evenly across the bridge. From an aesthetic standpoint, deck overhang should be proportional to the girder depth; a desirable overhang would be about 2/3 the girder depth. Vertical stiffeners make steel girders seem heavier, and should be avoided on the fascia side of fascia girders. Haunched girders can make a bridge look more slender, and help demonstrate the flow of forces in the bridge. Fishbelly girders create a heavy look, and could tend to look awkward. Some structure types are more visually elegant than others, such as trapezoidal box girders and concrete segmental bridges. An arch bridge is one of the most natural bridge types, and generally considered one of the most pleasing. Both thru and deck arches can be considered.

BENT SHAPE AND PLACEMENT

The visual impression that a person gets from a bent is primarily influenced by the proportions, the relative width and height, and the configuration of the bent cap with respect to the bent columns. Bent proportion, in turn, is determined by the bridge geometry and superstructure type and shape. Bents can broadly be classified as either short or tall. Short bents are typically more difficult to design with aesthetic proportions. Care should be taken in proportioning a bent to make sure that horizontal lines of the superstructure are not interrupted. Large bents may direct attention away from the superstructure. Bents that are too slender may convey a feeling of instability. However, there are aesthetic issues that are common to all bent types involving the shape of the columns and the bent caps. The selection of the proper bent type can be dictated by the site, bridge geometry and design considerations.

1.1.2.9 Other Things to Keep in Mind - (continued)

The shape and location of the columns affect the appearance of the bents. The light reflecting from the surface often controls how the viewer perceives it. A square or rectangular column with beveled corners will appear more slender due to the edge lines and varying shades of reflected light. The designer needs to assure that the treatments used are in harmony with the rest of the structure. Bent caps, cantilevered ends, and column spacing can be designed to make the bent appear more graceful. For hammerhead bents, the stem width and height, and the cantilever length and depth should be carefully balanced, and in pleasing proportion. Solid bents can be battered to improve their appearance. The batter should be determined by the bent height and the relative dimensions at the top and bottom of the bent. Gradual lines are important. While tall bents are less common than short bents, they allow a greater opportunity for aesthetic treatment.

END BENT SHAPE AND PLACEMENT

For most simple span bridges and some multi-span bridges, the end bents are the most visible elements. While the end bent's function is to support the superstructure and transfer loads to the ground, it is important to maintain proper proportion in order to create a good appearance.
Good proportions between various elements of the bridge give character to the bridge. For the end bents it is important to consider the relationships between the exposed end bent height and length, the size and type of wingwalls, and the superstructure depth. An attempt should be made to achieve a balance between these elements.

The designer must maintain order between the lines and edges of the structure. Too many lines, or lines that are close to but not parallel to each other, can disrupt the eye and diminish the appearance of the bridge. The monotony of a large flat wingwall can be broken up using textures such as scoring, recessing, or grooving. Surface textures, either by using or simulating natural stone around the area of the bridge, can be used to integrate the structure with its surroundings.

The orientation of the end bents to the feature crossed will create different visual appearances. End bents on severe skews can have very long stems and wingwalls. Consideration should be given to the aesthetic impact of those concrete surfaces. Wingwalls are often very predominating features. The orientation of the wingwalls allows for more or less visual impact. On divided roadways, the view presented from the opposite direction of travel should be considered.

PARAPET AND RAILING DETAILS

The railings or barriers, along with the deck fascia and fascia girders, are sometimes the most dominant visual aspect of the bridge. The railings are viewed by people traveling under the structure who see them in elevation and by people in vehicles on the bridge traveling parallel to them. When vehicle speeds are high, the railing or barrier should have simple and pronounced details because passengers cannot notice fine details. The shape of the railing or barrier system should relate to its function and the overall aesthetic design of the bridge.

The design and appearance of any fencing to be placed on the bridge should be consistent with the railing or barrier system. The vertical supports of the screening should align with the railing post spacing. Fencing on concrete barriers should be detailed to match the construction joints and the ends of the barriers.

BACK

1.1.2.9 Other Things to Keep in Mind - (continued)

COLORS

When there is a reason to color the concrete, steel, or railings, a decision should be made whether the color should complement or contrast with the surrounding environment. Strong consideration should be made to the fact that colored concrete or steel will require a high level of maintenance. The designer should also consider the appearance if regular maintenance is not performed (e.g., peeling paint, rust spots, etc.).

Coloring agents are not allowed in concrete because of complicated quality control, difficulty in matching colors in each batch, and the high cost of materials. It is nearly impossible to get an identical color of concrete from one pour to the next, or over a period of time between placements. Staining concrete can create a mottled appearance when appropriate to match natural stone, and can be effective if a trial section is used to qualify the process. External coatings are allowed, and when applied correctly can achieve the desired appearance. However, they have durability limitations, and must be used with caution due to concern regarding the owner's ability to maintain the coating.

TEXTURES

Texturing concrete can be achieved through form liners, panels, stone or brick veneer, or acid washing. Any texturing should fit in within the overall design and proportions of the structure.

Several types of commercial form liners are available. Natural stone or brick facades can also be used. Stone is most often used for parkway bridges and those in rural settings. The cost of stone covering can be quite high; and should therefore be limited to areas of high visibility and established contextual settings. When a concrete cap is used on the top of a wingwall or retaining wall, it should be visually proportioned to the wall itself.

ORNAMENTATION

Ornamentation can be added to a bridge in special circumstances. The additional cost of add-ons is rarely justified except in cases of importance to the community (such as a gateway to a city) or of historical significance. Details such as ornamental light posts, columns or pylons, real or simulated gatehouses, commemorative plaques or reliefs may be added. The designer should consider these details carefully since it is just as easy to detract from the overall appearance of the bridge, as it is to improve it.

Such details are secondary to the primary purpose of the structure, which is to provide a safe and efficient crossing to the public. Ornamental and non-structural details require additional coordination, sketches and drawings to ensure that the details will add to the aesthetic characteristics of the structure in a way acceptable to all concerned.

BACK

1.1.2.9 Other Things to Keep in Mind - (continued)

(2) Traffic Handling and Data

Consider the various methods of handling traffic:

- Is the method proposed by the field the most reasonable way to build a project?
- Are there alternate and possibly more satisfactory solutions?

There are four basic methods of handling traffic when replacing a bridge:

- Close the highway while removing and rebuilding the bridge.
- Use the existing roadway and bridge while constructing a parallel bridge on new alignment.
- Construct a temporary detour around existing bridge and replace the bridge on the existing alignment.
- Use stage construction with one or more existing or new lanes carrying traffic while other portions of the existing bridge are being removed and rebuilt.

Often the last method is recommended over the second and third methods without proper investigation. Stage construction may:

- Cause a high number of complaints from the traveling public.
- Mean greater danger for ODOT and contractor personnel as well as to the public.
- Result in construction difficulties and longer construction time.
- Adversely affect the quality of the finished product.

Another traffic handling consideration that should not be overlooked is accommodating pedestrians (including the disabled) and bicycles passing through the work site, especially in urban areas.

(3) Bikeways

Oregon law requires that reasonable amounts of highway funds be spent for bicycle and pedestrian facilities. That means: consider bikeway staging needs wherever highways, roads, or streets are being constructed, reconstructed, or relocated.

"Bikeway" is a general term meaning any road or paths open to bicycle travel regardless of whether it is designated for bicycles or to be shared with pedestrians or automobiles. Specific types of bikeways are:

- Bikes lanes or bike paths.
- Shared roadways.
- Shoulder bikeways.
- Sidewalk bikeways.

To work with bikeways, you are going to need:

- *Oregon Bicycle Plan.*

- AASHTO *Guide for the Development of Bicycle Facilities.*

1.1.2.9 Other Things to Keep in Mind - (continued)

(4) Protection of Recreational/Cultural Resources

Be alert to the effects of construction on:

- Recreational activities, areas, or facilities.
- Cultural resources such as fossils, artifacts, burial grounds, or historical bridges and dwellings.

Refer to Section 00290, "Environmental Protection", specifically Section 00290.50, "Protection of Cultural Resources", in the *Standard Specifications for Construction.*

Although normally researched and proposed by ODOT's Environmental Section, protection or consideration of these activities or resources can be initially overlooked. Permit requirements from agencies like the U.S. Army Corps of Engineers or Oregon Department of Fish and Wildlife deal with historical, cultural, and recreational concerns too. Here are some examples of challenges from the past:

- Protection of summertime river rafters passing under a contractor's work bridge.
- Removal of large amounts of river debris hung up on cofferdams and endangering a collegiate racing crew practicing downstream.
- Saving of old or rare trees near a city bridge construction site in deference to neighborhood sentiment.

(5) Right-of-Way

Proposed and existing right-of-way limits and any construction easements should be included with the vicinity map information. Ask yourself: Can my structure and the contractor's operations (work bridge, shoring, falsework, etc.) be accommodated within these limits?

For questions about right-of-way data, contact the project's Roadway Designer, who is in touch with the Right-of-Way Description Group and Right-of-Way Services personnel in the Regions. Both the Location Narrative and the Right-of-Way Estimate Report included in the location survey data package discuss right-of-way provisions and concerns.

For the structure project that does not involve roadwork, verify that steps to acquire necessary right-of-way have been initiated.

Anticipate any need for additional right-of-way as early as possible because of the long lead-time required for purchasing right-of-way.

(6) Utilities

As an early design task, determine if there are:

- Requirements for carrying existing and future utilities on bridges.
- Requirements for accommodating utilities in the vicinity of box culverts, sound walls, or retaining walls, especially mechanically stabilized earth (MSE) walls.

BACK

1.1.2.9 Other Things to Keep in Mind - (continued)

If you are providing for existing or future utilities on a bridge, read Section 1.4.7, "Utilities on Structures".

(7) Use of Salvage Materials

New materials are required for new and replacement bridges, and for added portions of widened bridges. ODOT Bridge Engineering Section does not prefer the use of used bridge items. Incorporation of used materials requires a BDDM Deviation approved by Bridge Section. The following are issues to be considered and included in a Deviation Request.

1. Locate and include in the project records for the new bridge all original material certifications and documentation of materials properties.
2. Document the condition of the used materials
3. Locate and include a copy of applicable portions of the original calc book in the project records for the new bridge.
4. Prepare a new calc book for the new bridge.
5. Document agreement from FHWA (on Federal projects) with a Public Interest Finding processed through Roadway Section.
6. Designate on the new plans the portions of the new bridge that are built with salvaged materials.

1.1.2.10 Special Considerations for Federal-Aid Projects

(1) Alternate Designs - According to the Federal Highway Administration (FHWA), the practice of providing alternate designs for major bridges results in substantial savings in bridge construction costs. Current FHWA policy states that use of alternate designs is optional and at the discretion of State highway agencies. If alternate designs are appropriate, consider the following:

- Utilize competitive materials and structural types.
- Prepare each alternate design using the same design philosophy. (That is, LRFD design, finite element, etc.) Ensure the design/construction requirements for the entire bridge (foundation, substructure, deck) are compatible.
- Prepare estimates for all alternate designs during the TS&L design phase.

Unusual Structures - FHWA policy requires "unusual bridges" to be approved before being designed. An "Unusual bridge" may have:

- Difficult, new or unique foundation elements or problems.
- A new or complex design concept involving unique operational or design features.
- Design procedures which depart from current acceptable practice.

BACK

1.1.2.10 Special Considerations for Federal-Aid Projects - (continued)

Examples of unusual bridges include:

- Cable-stayed, suspension, arch, segmental concrete, moveable, or truss bridges, and other bridge types which deviate from AASHTO *Design Specifications* or *Guide Specifications*.
- Bridges requiring abnormal dynamic analysis for seismic design.
- Bridges designed using a three-dimensional computer analysis.
- Bridges with span lengths exceeding 500 feet.
- Bridges with major supporting elements of ultra high-strength concrete or steel.

Other unusual structures include:

- Tunnels.
- Geotechnical structures featuring new or complex wall systems or ground improvement systems.
- Hydraulic structures that involve complex stream stability countermeasures.
- Designs or design techniques that are atypical or unique.

Where unusual bridges are identified, seek FHWA involvement as early as practical. Do not advance the design beyond TS&L without FHWA approval.

(2) Experimental Features Program - An experimental feature is a material, process, method, or equipment item that:

- Has not been sufficiently tested under actual service conditions to be accepted without reservation in normal highway construction, or
- Has been accepted, but needs to be compared with acceptable alternatives for determining relative merits and cost effectiveness.

Although the experimental features program is normally used in conjunction with Federal-aid projects, the program format has occasionally been followed for projects funded entirely by the State. In some cases, the FHWA has even paid part of the research cost for basically a State-funded experimental program.

The intent of the Federal-aid experimental features program is to allow ODOT time to develop, test, and evaluate specifications for new, innovative, or untried products or processes.

BACK

1.1.2.10 Special Considerations for Federal-Aid Projects - (continued)

(4) Specifying Proprietary Items - To encourage competitive prices from manufacturers and suppliers, the FHWA has established a policy for specifying proprietary products or processes for Federal-aid projects. Generally, "proprietary" means:

- Calling out a product on plans or in specifications by brand name.
- Using specifications written around a specific product in such a way as to exclude similar products.

The policy basically says:

- You must use two, preferably three, products when specifying by name brand.
- You can use generic specifications patterned after a specific item if at least two manufacturers can supply the item.

On the other hand, specifying one proprietary item is allowed only:

- If it qualifies for the experimental features program.
- If, with written justification from ODOT, the FHWA specifically approves in advance a single product, which is essential because of compatibility with an existing system, or the only suitable product that exists.

(5) Use Of Debris From Demolished Bridges And Overpasses – Public Law 109-59, dated August 10, 2005, Section 1805 mandates that for Federal-aid bridge replacement and rehabilitation projects, states are "directed to first make the debris from the demolition of such bridge or overpass available for beneficial use by a Federal, State, or local government, unless such use obstructs navigation." Links are provided for more information:

FHWA Memorandum of March 7, 2006 : [link to Bridge debris memo.pdf]
Public Law 109-59 Aug. 10, 2005 : http://www.fhwa.dot.gov/safetealu/legis.htm

Note that environmental regulations may prohibit the use of debris in waterways.

1.1.2.11 Type, Size, and Location (TS&L) Design

The end product of a TS&L design includes:

- TS&L Plan and Elevation drawing
- TS&L Estimate of structure construction cost
- TS&L Narrative

(1) TS&L Plan and Elevation Drawing - In its final form as part of the approved TS&L design, the TS&L Plan and Elevation drawing is produced on a half size CAD paper print. See Section 2.6, "Type, Size, and Location Plan and Elevation".

(2) TS&L Estimate - Normally, the TS&L Estimate of structure quantities and costs is based on a rough calculation of quantities. However, if time is short and the structure is ordinary or typical, square-foot costs may be adequate. A bridge with tall end bents would not be considered typical, and would, therefore, require a rough quantity estimate to account for the greater abutment costs.

1.1.2.11 Type, Size, and Location (TS&L) Design – (continued)

(3) TS&L Narrative - A TS&L Narrative is required for each design project except those minor ones such as deck joint rehabilitations, rail retrofits, or projects. The purpose of the TS&L Narrative is to provide enough background information so that reviewers can effectively evaluate the proposed final design. The following is a general outline of possible discussion items:

- General Background:
  - Project development and justification.
  - Right-of-way restrictions.
  - Permits and restrictions.
  - Utility conflicts or restrictions.
  - Railroad clearances and restrictions.

- Geometry and layout:
  - Roadway width, ADT, grades, and alignment. (If design does not meet current AASHTO standards, note that a design exception has been or will need to be made.)
  - Sidewalks, rails, and protective fencing.

- Hydraulics:
  - Waterway openings, high water elevation, and clearances.
  - Bank or bent protection.
  - Floodway information, when appropriate.

- Foundations:
  - Piling, drilled shafts, spread footings.
  - Fills, surcharges.
  - Settlement.
  - Lateral earth or seismic loads.
  - Liquefaction potential.

The following is a general outline of possible discussion items: - (continued)

- Structure Features:
  - Span length and span arrangement.
  - Type of superstructure.
  - Type of bents and location.
  - Alternate structure types considered and estimated costs.
  - Stage construction and detour requirements.

- Design concepts - Rationale for decisions about:
  - Building new bridge versus widening existing one.
  - Use of bridge versus culvert.
  - Foundation support assumptions.
  - Assumed pile or drilled shaft loads.
  - Assumed lateral soil pressure against end bent.
  - Seismic load assumptions.

BACK

1.1.2.11 Type, Size, and Location (TS&L) Design – (continued)

Many bridge replacement projects require a Biological Assessment. To aid in the process, try to address as many of the following subjects as practical.

1) Project timing and chronology.
2) Alignment and size of the new bridge in relation to the existing bridge (i.e., number of spans, length).
3) Quantity of impervious existing bridge surface removed and added by the new bridge.
4) Type of the new deck surface and construction methods.
5) Type of the new bridge railing and construction methods.
6) Proposed treatment of the runoff (i.e., number of scuppers or direct discharge drains on the old bridge vs. number of drains on the new bridge)
7) Number and sizes of the existing bents/footings to be removed within the OHWM and the wetted channel. Discuss the removal methods of the existing bents, footings and piles.
8) Number and sizes of bents/footings added for the new bridge, within the OHWM and the wetted channel. Discuss the construction methods for the new footing, bents and piles.
9) Type of isolation method used during construction (i.e., coffer dam).
10) For bridges with lead based paints, discuss the method of removal and disposal.
11) <u>If a detour bridge, working bridge, or falsework are required, discuss how many bents and types of temporary supports that may be within the OHWM and wetted channel. Discuss the construction and removal methods that might be used.</u>
12) Extent and duration of in-water work (i.e., heavy machinery in wetted channel).
13) Amount or extent of fill and/or rip-rap.
14) Possible staging areas and access.
15) Amount and type of vegetation to be removed (outside and within the OHWM).
16) Amount of wetland impacted.
17) Any planned mitigation.

Note: Even though the *Hydraulics Report* or *Foundation Report* may not be available at the time the TS&L Narrative is written, always include comments about assumptions made in consultation with the Hydraulics or Foundation Designer.

BACK

1.1.2.12 Final Design, General

The final design phase can begin after receiving the TS&L approval. All bridge design projects will be completed by assigning personnel to perform the following duties:

1. Bridge Design Reviewer
2. Bridge Designer
3. Bridge Design Checker

All personnel assigned to any of these duties will be required to either stamp and/or sign the final plans. Current practice requires only one stamp on the plans. The literal interpretation indicates that a registered designer must stamp his/her own plans. ORS 672.002(10) just requires that the stamping engineer have supervision and control unless he/she is not registered, in which case the checker or reviewer will stamp the plans, in accordance with OSBEEL rules for work done under supervision and control of a registered PE.

a. At least two out of the three functions listed above must have prior experience and minimum qualifications in the type of structure being designed, repaired, or strengthened, including bridge preservation work. Either the review or checking function must be done by someone with a minimum of five years experience in successful bridge design and construction support of bridges successfully constructed. If the unit, agency, or firm does not have the desired level of expertise, they will be expected to employ one of the following:

    - Provide a "tech advisory group" for the project, or
    - Hire a consultant or sub-consultant that does have the desired level of expertise

b. When main structural members are being designed, repaired, or strengthened, the Class 2 design check will only be allowed under rare circumstances, when the designer has completed more than five designs of the specific type of bridge under design, and then specific critical portions of the design will be verified independently.

Generally, the designated "Bridge Design Reviewer" is the immediate supervisor of the work unit that has been assigned the bridge project, or the person that has overall management responsibility for the project. Serving in that capacity, the "Bridge Design Reviewer" will be responsible for selecting the Bridge Designer, the Bridge Design Checker, and the CAD Drafting support for the project. Large design projects with multiple or complex structures will most likely involve several Designers and several Drafters. Often, these large projects can be done more efficiently if the Design Team Supervisor chooses a Lead Bridge Designer and Lead CAD Drafter to help organize and manage the project, as well as, fulfilling the following tasks, or assure they are done:

1) Fulfill the Design Team Supervisor's Responsibilities as specified in Bridge Section Office Practice 2.1.11.2
2) Review Plan as specified in 2.1.11.3(2)
3) Assure that the project is designed in accordance with accepted bridge design manuals as specified in 2.1.2.
4) Records are kept in accordance with 2.1.3.
5) Tracking Bridge Design Costs as specified in 2.1.7.
6) Measuring Design Productivity as specified in 2.1.8.
7) Assuring that Other Design Considerations were addressed 2.1.10.
8) Provide overall Project Guidance and Support 2.2.
9) Assure that Other Things are addressed 2.3.2.
10) Obtaining the appropriate Permits 2.3.3.

1.1.2.12 Final Design, General – (continued)

11) Periodically Reviewing the Job record Folder 2.3.4.
12) Processing the TS&L Design Package.
13) Review any Special Provisions 2.4.5.
14) Review Final Plans to assure that the design meets project objectives 2.4.8.
15) Review all Project Changes initiated during the Construction Phase.
16) Provide project support when handling Construction Problems.
17) Review all Price Agreements.
18) Review all Working Drawings.
19) Review the Construction Narrative 3.1.9.
20) Assure As-Constructed Drawings are created in accordance with 3.1.10 and submitted to Bridge Section along with the Calculation Book.
21) Transfer all Electronic Files to Bridge Section for Archiving.

Generally, the assigned Bridge Designer will be the designated "Engineer-of-Record" for the project and will generally see the project through to completion, from-cradle-to-grave. The designated Bridge Designer ("Engineer-of-Record") will be responsible for fulfilling the following:

1) Fulfill the Lead Designer's duties as specified in Bridge Section Office Practice 2.1.11.3. Assure that the bridge is designed in accordance with accepted ODOT Standard Bridge Design References shown in (Office Practice 2.1.2).
2) Fulfill the duties listed in the Bridge Section Office Practice 2.1.11.
3) Create the Preliminary Documents specified in Bridge Section Office Practice 2.2.2.
4) Fulfill the Preliminary Design Tasks specified in Bridge Section Office Practice 2.2.3..
5) Provide the Type, Size, and Location (TS & L) Design as specified in Bridge Section Office Practice 2.3.
6) Provide and keep the Bridge Design Calc Book current and up-to-date in accordance with 2.1.5 and 2.1.6.
7) The designated Bridge Designer will assure3 that the bridge is designed in accordance with Bridge Section Office Practice 2.4 "Final Design".
8) The designated Bridge Designer will be responsible for working with the CAD Drafting staff, with the Bridge Plans and/or modification of the Standard Drawings for the project.
9) Throughout the project development phase the designated Bridge Designer will maintain a Book of Design Calculations, so that it is current and up-to-date and contains the information specified in Bridge Section Office Practice 2.1.5 and 2.1.6.
10) The designated Bridge Designer will normally act as the project consultant throughout the Construction Phase, performing those dut9ies specified in Bridge Section Office Practice 3.1.
11) Assure Design Standards and Project Development Criteria are met or given exceptions from ODOT Roadway Section.
12) In addition to Design using authorized Computer System and Software (2.1.4), perform cursory bridge design calculation by hand to assure input and output from the computer software is correct..
13) Review any Special Provisions 2.4.5.

BACK

1.1.2.12 Final Design, General - (continued)

14) National Bridge Inventory System Requirements:
    a. The Bridge Operations Work Unit will be kept appraised of all bridge inventory data changes.
    b. The following Bridge Operations, Standards and Practices personnel will receive a copy of the advanced plans when they become available:
        i. Bridge Operations Engineer
        ii. The Region Bridge Inspector where the structure resides
        iii. The Bridge Inventory Coordinator
        iv. If the structure is a local agency bridge – the Local Agency Bridge Inspection Coordinator.
    c. The Region Bridge Inspector, where the structure resides, will be given a notice prior to opening the structure to public travel.

All Bridge Design Projects must also have a designated "Bridge Design Checker". Even though the designated Bridge Designer is the Engineer-of-Record, the checker will perform an independent calculation for the bridge being designed, as well as, fulfilling the following duties:

1) Fulfill duties as specified in Bridge Section Office Practice
    a. Bridge Design Checker, Class 1 – 2.4.9,
    b. Checking Last Minute Changes – 2.4.10.2,
    c. Check Working Drawings when not in conformance with the design drawings – 3.1.8,
    d. Perform a Review of the Construction Narrative – 3.1.9.

2) Stay involved throughout the life of the project so that a check of calculations and a review of design decisions can be performed.

The final design end product includes:

- Plans – Clear and complete detailed plans with all information necessary to obtain a fair bid and to layout and construct the project.
- Specifications – Preparation or assembly of all Specifications, Supplemental Specifications, and Special Provisions necessary for construction of the project.
- Estimates – Calculated quantities of all materials in the project, based upon the current Bid Item list. Estimate of the time required for construction using a graph format showing all critical stages of the construction. Estimate of the cost of design assistance during construction.
- Calculation Book(s)
    1. Design Calculations – A structural analysis and design of the bridge and related components. Documentation of the work with hand calculations, computer output and detailed notes. The Design Engineer is responsible for the meaning and applicability of all computer generated data.

BACK

1.1.2.12 Final Design, General - (continued)

2. Design Check Calculations – An independent check of: the structural analysis and design of the bridge and related components, plan detail sheets, specifications and special provisions, and project quantities; Documentation of the work with hand calculations, computer output and detailed notes; the meaning and applicability of all computer generated data by the checking Engineer.

   The level of detail to be checked varies with the complexity of the project and the amount of experience of the Designer and Checker.

   Class I Check – The Class I check is a comprehensive design review covering all aspects of the project. It will be done primarily for:

   - Major complex structures.
   - Steel and post-tensioned bridges.
   - Structures designed by an inexperienced Designer.
   - Structures checked by an inexperienced Checker.

   The Checker is responsible for the following:

   - Review of location data and correspondence files.
   - Review of construction time and seasonal requirements, permit applications, work-in-stream restriction, and utility installations and conflicts.
   - Review of foundation and hydraulic requirements.
   - Check for consistency of alignment and details with roadway plans.
   - Thorough check of geometry, alignment, grades, clearances, and construction details.
   - Verification of structure length, roadway width, structure type selection, aesthetic treatment, span arrangement, bent type and configuration, and rail type.
   - Complete independent structural analysis of all components according to design specifications and current design practice. The Checker should make a quick, longhand check of the most important structural elements before beginning a computer analysis of the design.
   - Independent check of Final Estimate quantities and reconciliation of figures with Designer.
   - Confirmation that all items listed in the Checklist for Final Design (BDDM A2.7.2) have been satisfied.

   Class II Check – The Class II check is a review of design concepts and construction details and does not necessarily include a structural analysis. It will be done primarily for:

   - Minor bridges designed by an experienced Designer.

BACK

1.1.2.12 Final Design, General - (continued)

The Checker is responsible for the following:

- Review of correspondence, job files, and design calculations.
- Confirmation that foundation and hydraulic requirements are met.
- Verification of geometry, alignment, and structure type selection.
- Confirmation with Designer that critical structural items have been analyzed during the final design.
- Completeness of plans
- Check of construction details and Final Estimate quantities.

BACK

1.1.3 Foundation and Hydraulic Considerations

1.1.3.1 Foundations and Hydraulics, General

The Foundation and Hydraulics designers will provide data and recommendations with respect to types of footings, footing elevations, nominal and factored resistances, types of piling, pile tip reinforcing, drilled shaft tip elevations, and scour protection which are to be used at each bridge site. The Designer should be satisfied that the recommendations are adequate with respect to factored loads, scour and economy. If there are questions in this matter, they should be discussed with the Foundations and Hydraulic design engineers. Special factors in the type of construction selected may cause a reconsideration of the original recommendation. Some basic guidelines include:

- Riprap at bridge ends or on embankment slopes is considered a roadwork item. Layouts and typical sections of riprap details such as thickness, filter blanket, and toe trench are to be shown on the roadway plans (see below). For the structure plans, show riprap at bridge ends to scale, but without dimensions and with a note: "See Roadway Plans for riprap details." For bents and footings in streams and not at bridge ends, show riprap details. (See Section 1.1.6, "Underwater Construction.")

- If the Foundation or Hydraulic report is not available, the fact should be noted and the basis for the design of the footings should be indicated.

- Except for special cases, provide a minimum of 2 feet of cover over the top of spread footings.

- Except in solid rock, make the bottom of all footings in streambeds a minimum of 6 feet below the normal streambed. For footings with seals, the top of the seal is considered the bottom of the footing.

- Make the top of footings within the right of way of the Union Pacific Railroad a minimum of 6 feet below the bottom of the low rail to allow for future underground utilities.

RIPRAP CLASS	T	Filter Blanket
50	12"	none
100	18"	none
200	24"	6"
700	36"	9"
2000	48"	12"

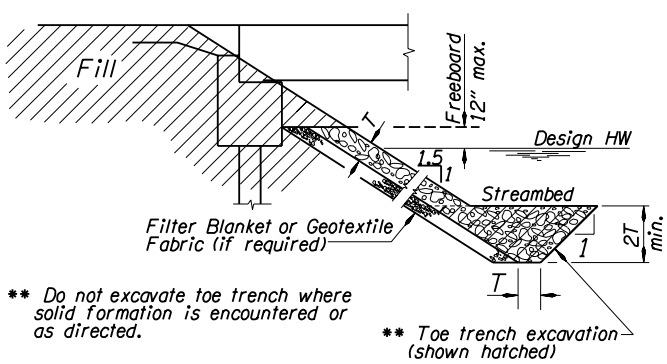

RIPRAP BLANKET AND TOE TRENCH DETAIL

Figure 1.1.3.1A

BACK

1.1.3.2 Lateral Earth Restraint

If passive earth pressures are used in design to resist seismic or other lateral loads, detail the plans to ensure assumed soil conditions exist after construction. Where possible, plans should specify placing footings against undisturbed material. The soil type may be such that it will not stand vertically after excavation. If soil is disturbed, Standard Specifications for Construction Section 00510.41 require backfilling with compacted granular material. If there is any question concerning this, consult with the Foundation Designer. If the excavation will not stand vertically, add a reference note, "See Standard Specifications for Construction" to the "Structure Excavation Limits" detail shown on the plans. The Contractor will be allowed to excavate beyond the footing limits and backfill with compacted granular structure backfill (00510.46). If footings, such as pile supported, etc., do not require the lateral soil resistance for stability, then do not call for pouring against undisturbed material.

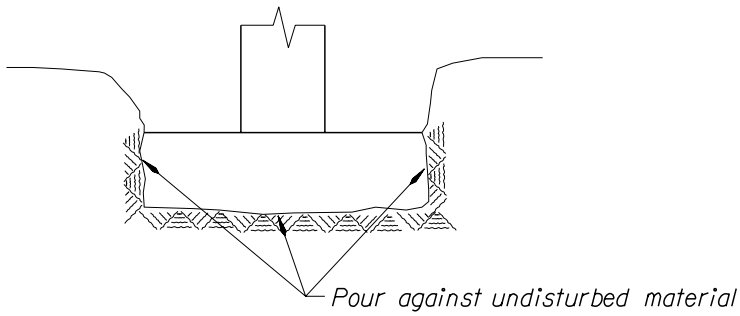

Figure 1.1.3.2A

1.1.3.3 Cofferdams

If cofferdams are required and passive earth pressures are assumed in the design, show a detail similar to Figure 1.1.3.3A on the plans. Material outside cofferdams should also be undisturbed and backfilled with riprap if disturbed.

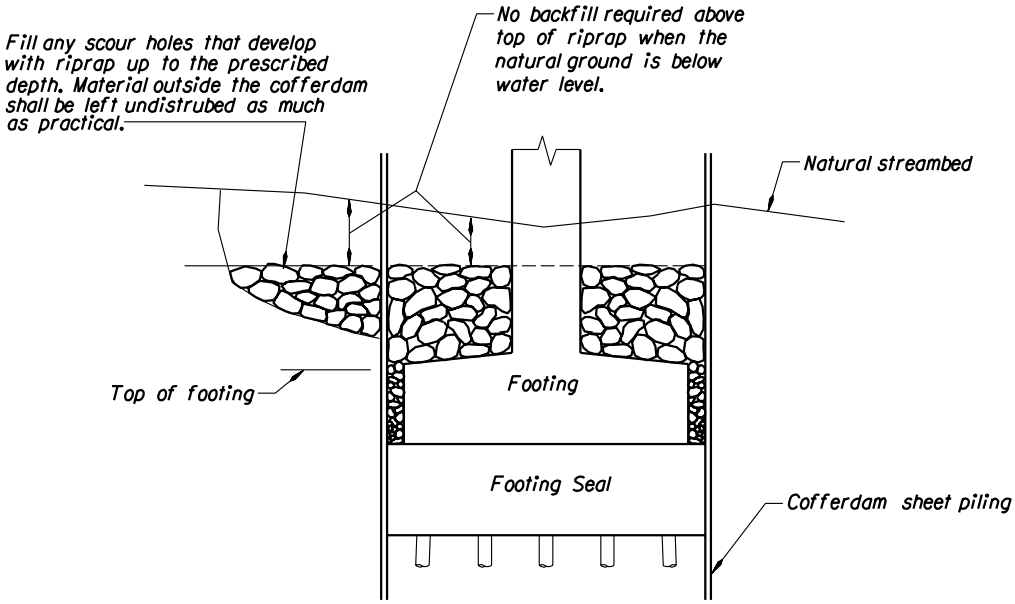

Figure 1.1.3.3A

1.1.4 Foundation Modeling (Foundation Springs)

In foundation modeling it is common practice to first assume translational and rotational fixity of the foundation supports and perform a preliminary structural frame analysis. The resulting reactions are checked against the factored resistances. This procedure underestimates global deflections but establishes an upper bound for forces. This type of foundation modeling may be sufficient in certain loading conditions, such as thermal expansion, where deflections are not a controlling factor in design provided the forces are not excessive. However, under higher lateral loading conditions, such as moderate to severe seismic loading, more accurate deflections and forces are desirable. Excessively conservative design forces can be expensive to accommodate. In these cases, foundation springs are typically used in the structural frame analysis. The computer program GT-STRUDL allows the use of these springs. Foundation springs are typically equivalent linear springs representing the translational (horizontal), axial (vertical) and rotational load-deflection behavior of a nonlinear soil response. The use of foundation springs can significantly reduce the upper bound foundation reactions and more accurately models the entire soil-structure interaction system. Nominal geotechnical resistances are typically used with seismic loading conditions unless otherwise directed by the Foundation Designer. Factored resistances are typically used for all other load combinations. Factored resistance is the nominal resistance multiplied by the appropriate resistance factor.

1.1.4.1 General Modeling Techniques

There are three options for foundation modeling:

(Option 1) Fixed foundations

(Option 2) Fully coupled foundation spring model

(Option 3) Uncoupled translation and rotational springs

Option 1 fixes all foundation supports in the computer model. The resulting forces are simply compared to the resistances stated either in the Foundation Report or as determined in this section of the design manual. If the resulting forces exceed the resistances, foundation modeling using springs is recommended.

Option 2 allows stiffness coupling for both shear and moment and also cross-coupling (off diagonal). This option is not required for most problems. This option should be used for drilled shafts, trestle piles and for some pile foundations where the piles are connected to the substructure or superstructure such that a fixed condition exists. A massive footing with deeply embedded piles is an example. The method is applicable to all types of foundations.

Option 3 is the most commonly used method to represent footing and piling flexibility. It is a simplified version of the fully coupled spring model (Option 2) and is used in cases where there is no significant moment transfer between superstructure and foundation elements. This option is appropriate for most problems except as noted in Option 2 above. Use this option with vertical piling only. Battered piles result in larger lateral stiffness, which this option does not presently address.

BACK

1.1.4.2 General Procedures and Typical Values

The following guidelines are provided for Option 3 as general information, and are intended to be supplemented with engineering judgment. Methods are presented for developing foundation springs, including factored and nominal resistances, for the following foundation types:

- Abutments and wingwalls
- Spread footings
- Piles and pile caps

Foundation springs are typically nonlinear in form although some are represented in bilinear form. The curve typically consists of an initial (straight line) stiffness followed by a nonlinear relationship leading up to a nominal resistance. Various methods are used, depending on the type of spring, to develop the entire nonlinear load-deflection curve (spring).

The procedures described in this section, and typical values, come from the following sources:

- "Seismic Design of Highway Bridges", Workshop Manual by Imbsen & Associates, Inc., prepared for the FHWA, October, 1989.
- "Design and Construction of Driven Pile Foundations", FHWA Workshop Manual, Volume 1, December, 1996.
- Design Manual 7.2, "Foundations and Earth Structures", Dept. of the Navy, May, 1982.
- "Foundation Analysis and Design", (4th ed.) by Joseph E. Bowles.
- "Design Manual for the Foundation Stiffnesses Under Seismic Loading", prepared for Washington DOT by Geospectra, April, 1996.
- "Design Guidance: Geotechnical Earthquake Engineering For Highways", Volumes I & II; FHWA Report No. FHWA-SA-97-076-77, May, 1997.
- Pile capacity and stiffness work done by Bridge Engineering and Geotechnical Group personnel in 1996 and 1997.

Standard Penetration Test (SPT) numbers presented in the Design Manual ("Nc" values) refer to "N" values for granular soils corrected to an effective overburden pressure of 1 tsf. Uncorrected "Nc" values should be used for cohesive soils. The Foundation Designer should be consulted for representative values to use in these methods.

BACK

1.1.4.2 General Procedures and Typical Values - (continued)

(1) <u>Abutments and Wingwalls</u>: - Use translational springs in both the longitudinal and transverse directions.

Translational Stiffness: The abutment translational stiffness should account for displacements resulting from expansion joints associated with seat abutments.

Soil Backfill: Initial backfill stiffness, K_i = 20 kips/in./ft. for both backwall and cap. Similar for wingwalls transversely but discount one wingwall and use 2/3 of the remaining one. The initial stiffness should be adjusted proportional to the backwall width and height according to the following equation:

$K_{abut} = K_i \times W_{bw} \times (H_{bw}/5.5)$
Where "W_{bw}" is the width of the backwall in feet and "H_{bw}" is the height of the backwall in feet.

Piles: Refer to "Pile Supported Footings and Abutments" (Section 3) below. Generally assume dense granular fill. Use pile translational stiffnesses in tables below for loading conditions other than seismic. For seismic loading conditions, perform a COM624P or LPILE analysis. Consult with the Foundation Designer to verify COM624P or LPILE soil properties.

<u>Translational Capacities</u>:

Soil Backfill: The passive pressure resisting the movement at the abutment increases linearly with the displacement up to a maximum pressure of 5.0 ksf. The maximum passive pressure of 5.0 ksf is based on the ultimate static force developed in the full scale abutment testing conducted at UC Davis [Maroney, 1995]. The maximum passive force should be calculated using the following equation:

$P_{force} = H_{bw} \times W_{bw} \times 5.0\text{ksf} \times (H_{bw}/5.5)$

where:
H_{bw} = height of backwall and cap, feet.
W_{bw} = width of backwall, feet

Similar for wingwalls transversely except discount one wingwall and use 2/3 of the remaining one.

Piles: For seismic loading, use ultimate values derived from COM624P or LPILE analysis by comparing the maximum yield moment of the pile to the maximum moment output from COM624P or LPILE. Take end slope and side slope effects into account. Generally assume dense granular fill representing granular wall backfill. This material should be present in the entire passive wedge area. Consult with the Foundation Designer to verify COM624P or LPILE soil properties. Use allowable pile capacities in tables below for loading conditions other than seismic.

BACK

1.1.4.2 General Procedures and Typical Values - (continued)

Translational Load-Deflection Curve:

Use the initial stiffness up to the capacity limit. The curve form is:

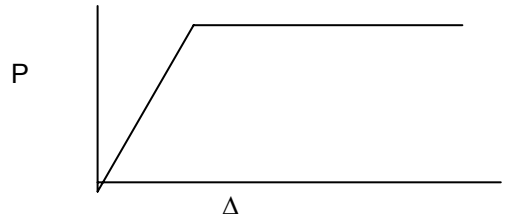

(2) **Spread Footings:** - Unless constructed on solid bedrock, use translational and rotational springs in both the longitudinal and transverse directions. In general, footings keyed into a rock mass that has an elastic (Young's) modulus typically greater than 14,000 ksf (Unconfined Compressive Strength = 1000 psi) can be considered "fixed" against both rotation and translation. Consult with the Foundation Designer to determine the compressibility of very soft or highly fractured bedrock materials.

Translational and Rotational stiffnesses:

Use the equivalent circular footing formulas on the following pages with information from Table A, to develop translational and rotational spring constants. Consult with the Foundation Designer for the appropriate soil values to use in Table A.

	SPT "Nc"*	E (ksf)	Poisson's Ratio (*v*)	G (ksf)
Granular				
V. Loose	4	300	.35	110
Loose	10	1000	.35	370
Medium	30	2000	.35	750
Dense	50	3000	.35	1100
Cohesive				
Soft	4	400	.50	150
Stiff	8	1000	.50	350
Very Stiff	16	1500	.50	500
Hard	32	2000	.50	650

TABLE A

* "Nc" is the average of Nc values over a depth of 2B below the footing, (B = footing width).

BACK

1.1.4.2 General Procedures and Typical Values - (continued)

(2) Spread Footings: - (continued)

Stiffness Calculations for Spread Footings:

Spring constants for rectangular footings are obtained by modifying the solution for a circular footing bonded to the surface of an elastic half-space. The formula is as follows:

$$k = \alpha\beta K_0$$

where:
k = initial stiffness (spring constant)
α = foundation shape correction factor; (from graph)
β = embedment factor, (from graph)
K_0 = stiffness coefficient for the equivalent circular footing (see formulas in Table B below)

The stiffness term, K_0 ,is calculated using the equations in Table B below:

Displacement Degree-of-Freedom	K_0
Vertical translation	$4GR/(1-v)$
Horizontal translation	$8GR/(2-v)$
Torsional rotation	$16GR^3/3$
Rocking rotation	$8GR^3/(3(1-v))$

TABLE B: Stiffness coefficient, K_o , for a circular footing at the ground surface

Note:
G = Shear Modulus (low strain range)
v = Poisson's ratio for elastic half-space material
R = Equivalent footing radius as determined from the following equations:

EQUIVALENT RADII, R, FOR RECTANGULAR FOOTING SPRING CONSTANTS:

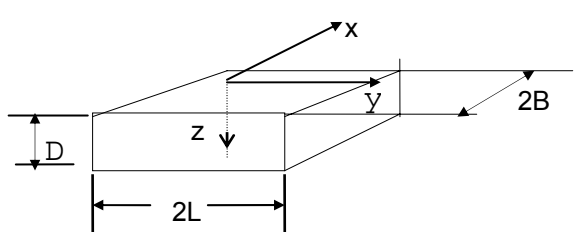

RECTANGULAR FOOTING

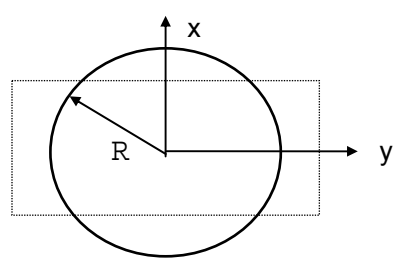

EQUIVALENT CIRCULAR FOOTING

1.1.4.2 General Procedures and Typical Values - (continued)

(2) Spread Footings: - (continued)

Stiffness Calculations for Spread Footings: - (continued)

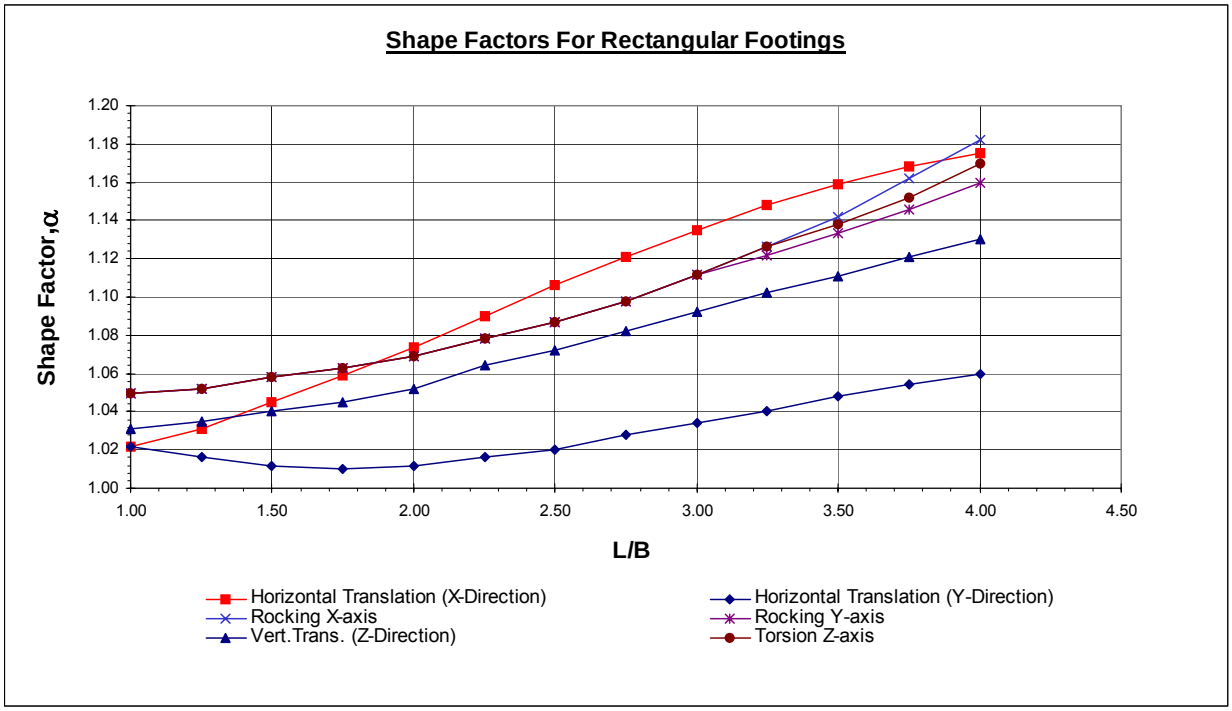

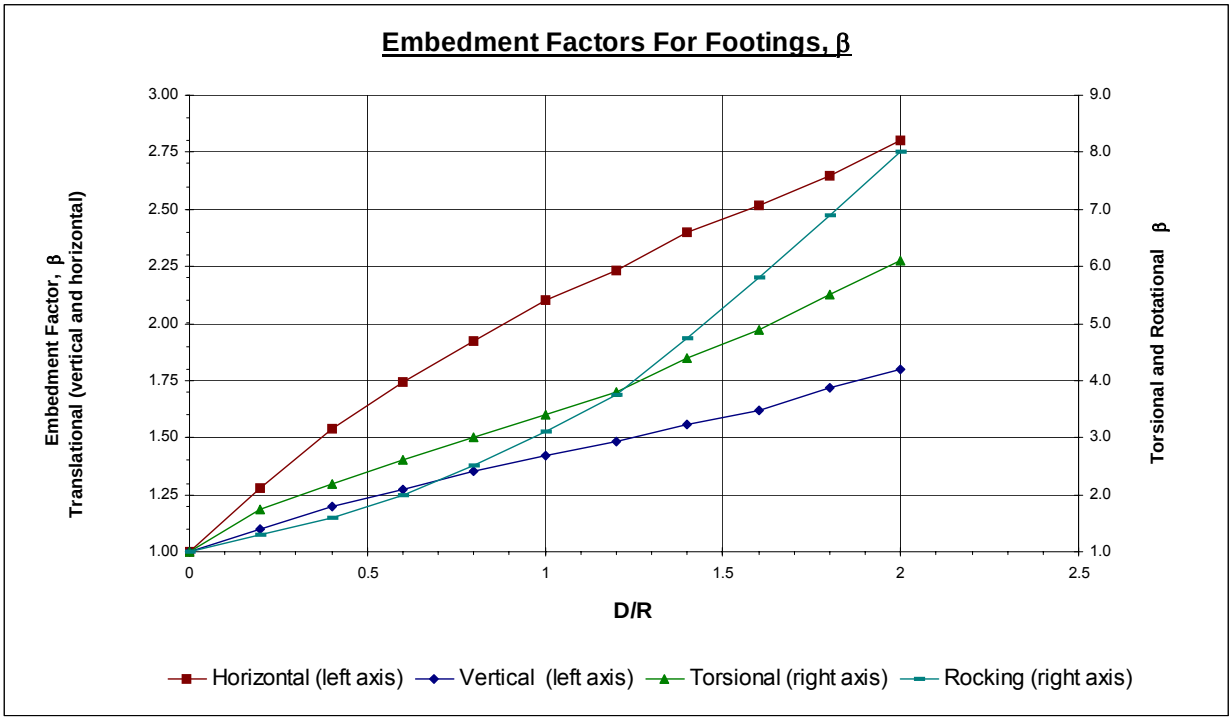

BACK

1.1.4.2 General Procedures and Typical Values - (continued)

(2) Spread Footings: - (continued)

Stiffness Calculations for Spread Footings: - (continued)

EQUIVALENT RADIUS:

TRANSLATIONAL: $$R = \sqrt{\frac{4BL}{\pi}}$$

ROTATIONAL: $$R = \left[\frac{(2B)(2L)^3}{3\pi}\right]^{1/4}$$; for x-axis rocking

$$R = \left[\frac{(2B)^3(2L)}{3\pi}\right]^{1/4}$$; for y-axis rocking

$$R = \left[\frac{4BL(4B^2 + 4L^2)}{6\pi}\right]^{1/4}$$; for z-axis torsion

Translational Capacities:

The use of the following values depends on the footing construction method (i.e. formed with backfill material or poured against undisturbed material). Only the passive resistance developed from the front face of the footing, combined with the shear resistance along the footing base, is considered. Column and footing side resistance is neglected. Consult with the Foundation Designer for recommended soil properties, groundwater levels and proper effective unit stress to use in the analysis. Scour effects should also be considered.

Use the values from Table C in the general formula:

Force Capacity = (Kp x effective unit stress x footing face area)
+ (Su x footing face area) + (μ x support reaction)
+ (Su x footing base area)

Use appropriate components depending upon soil type. Consult with the Foundation Designer for the appropriate soil values to use.

Note: Effective Unit Stress = (Buoyant Unit Weight x Depth to middle of footing)

BACK

1.1.4.2 General Procedures and Typical Values - (continued)

(2) Spread Footings: - (continued)

Stiffness Calculations for Spread Footings: - (continued)

Translational Capacities: - (continued)

	SPT "Nc"	STATIC CAPACITY			Total Unit Wt. (k/ft^3)
Granular		Kp	Su (ksf)	μ	
V. Loose	4	2.7	0	.34	0.090
Loose	10	3.0	0	.40	0.100
Medium	30	3.7	0	.47	0.115
Dense	50	4.6	0	.56	0.120
Cohesive					
Soft	4	-	0.5	-	N.A.
Stiff	8	-	1.0	-	N.A.
Very Stiff	16	-	2.0	-	N.A.
Hard	32	-	4.0	-	N.A.

TABLE C

Deflection required to fully activate capacities (Δ_{max}):

Granular:
- Loose .06H
- Dense .02H

Cohesive:
- Soft .04H
- Stiff .02H

H = Soil surface to middle of footing depth

Specific applications may require the use of less than the full capacity due to deflection restrictions.

Rotational Capacities:

The rotational capacity is typically determined by comparing the total footing pressure, including the overturning moment, to the factored bearing resistance provided in the foundation report, unless otherwise directed by the Foundation Designer. The bearing resistance of footings with overturning moments and eccentricity are determined using "effective" footing dimensions.

BACK

1.1.4.2 General Procedures and Typical Values - (continued)

(2) Spread Footings: - (continued)

Stiffness Calculations for Spread Footings: - (continued)

Translational Load-Deflection Curve:

The following equation may be used in conjunction with the translational stiffnesses and capacities for developing a translational load-deflection curve for spread footings and pile caps.

$$P = \frac{\Delta}{\frac{1}{k_{max}} + \left[R_f \times \frac{\Delta}{P_{ult}} \right]}$$

where: P = Load at deflection Δ
P_{ult} = Ultimate passive force (neglect base shear for pile caps)
k_{max} = Initial stiffness
R_f = Ratio between the actual and the theoretical ultimate force. R_f can be determined by substituting Δ_{max} from the previous section for Δ and P_{ult} for P in the above equation and solving for R_f.
Δ = Translational deflection, inches

An example of the use of this equation is given below. This graph represents the form of the equation only.

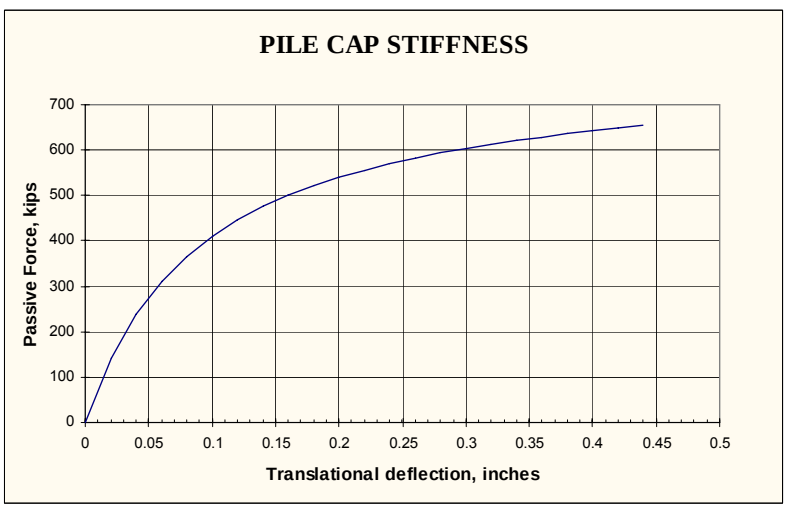

Rotational Load-Deflection Curve: Use the initial stiffness up to the capacity limit. The curve form is:

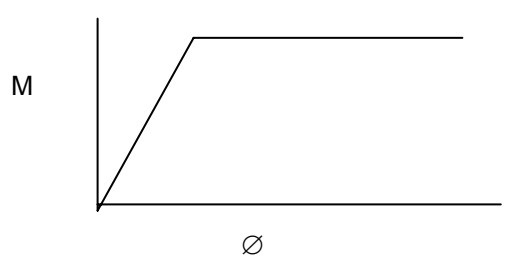

1.1.4.2 General Procedures and Typical Values - (continued)

(3) **Pile Supported Footings** - Use translational and rotational springs for pile supported footings in both the longitudinal and transverse directions. This approach is recommended in cases where seismic loading is the controlling factor in the structural frame analysis. Springs may also be used to model pile supported footings in non-seismic conditions at the designer's discretion. Nominal resistances may be used for both nonseismic and seismic design conditions unless otherwise recommended by the Foundation Designer.

In cases where seismic loading is not the maximum group loading for the structure, the stiffnesses and nominal lateral resistances given in the following tables are acceptable for most design cases, provided the site conditions generally satisfy the assumptions made in developing these values. In general, for soils with "Nc" values less than 4, the pile translational stiffness should be evaluated using the COM624P or LPILE programs and the Foundation Designer should be consulted for further guidance.

The use of battered piles is generally discouraged due to the greatly increased stiffness contribution from the battered piles. This in turn can result in excessive battered forces and induce undesired or unrealistic uplift forces in adjacent piles. In lieu of battered piles, it is recommended to use vertical piles throughout the footing.

Refer to the seismic design example problem for further clarification.

Translational Stiffnesses:

Normally the translational stiffness should include the lateral pile stiffnesses (total pile group stiffness) plus the passive soil stiffness on one side of the footing. Typically, a single lateral pile-head stiffness is estimated from either the pile-top, load-deflection curve generated by LPILE or COM624P program output or from pile stiffness values given in the following tables. This single pile-head stiffness is then multiplied by the number of piles in the group and the resulting group stiffness value is then multiplied by a group reduction factor depending on pile spacing. Instead of using a group reduction factor, pile group effects may also be accounted for using p-y curve multipliers as described under "Pile Group Reduction Factors and p-y Multipliers". These multipliers are included in the LPILE program but not in the COM624P program.

Pile cap, or footing, stiffnesses should be developed using the methods described under "Spread Footings", except the soil stiffness contribution along the base of the pile cap should be neglected. This is accomplished by calculating the stiffness of the pile cap (footing) at the ground surface (D = 0) and subtracting this value from the stiffness calculated for the embedded pile cap footing. The resulting stiffness curve is then combined with the pile group stiffness curve as described in "Translational Load-Deflection Curve".

Seismic Controlled Loading Condition – Extreme Event Limit State

The pile-head translational stiffness curve is generated using the COM624P or LPILE program using soil input parameters supplied by the Foundation Designer. Pile head boundary conditions (fixed, free or fixed-translational) must be assigned by the designer. Refer to the FHWA publication "COM624P - Laterally Loaded Pile Analysis Program for the Microcomputer", Version 2.0, FHWA-SA-91-048 or the LPILE Plus computer program manuals. This method is shown in Figure 1, on Page 1-38.

BACK

1.1.4.2 General Procedures and Typical Values - (continued)

(3) Pile Supported Footings - (continued)

Non-seismic Loading Conditions

For non-seismic loading conditions the following pile stiffnesses may be used provided the site conditions generally satisfy the assumptions given below.

Pile Translational Stiffnesses (k/in):

Axis - W=Weak S=Strong	SPT "Nc" *	HP 10x42		HP 12x53		HP 12x74		HP 14x89		HP 14x117	
Granular		W	S	W	S	W	S	W	S	W	S
V. Loose	4	5	8	6	10	7	11	9	13	10	14
Loose	10	12	14	12	18	14	20	16	24	18	24
Medium	30	16	20	18	27	20	30	25	38	28	41
Dense	50	25	34	29	44	31	46	40	61	44	64
Cohesive											
Soft	4	2	2	2	3	2	3	3	4	3	4
Stiff	8	4	6	5	7	6	8	7	9	7	9
Very Stiff	16	8	10	9	12	10	13	12	15	12	16
Hard	32	14	19	17	22	18	24	21	27	23	30

Pipe Piles	SPT "Nc"*	12x 0.25	12x 0.38	16x 0.38	16x 0.50	24x 0.38	24x 0.50
Granular							
V. Loose	4	7	8	11	12	20	22
Loose	10	14	15	20	21	33	37
Medium	30	20	23	29	34	48	57
Dense	50	32	37	46	54	81	87
Cohesive							
Soft	4	2	3	3	3	4	4
Stiff	8	6	7	8	9	11	12
Very Stiff	16	10	11	13	14	18	18
Hard	32	18	20	24	26	34	36

Prestressed Piles	SPT "Nc"*	12" prest.	14" prest.	16" prest.
Granular				
V. Loose	4	8	8	11
Loose	10	12	14	19
Medium	30	22	24	28
Dense	50	34	38	45
Cohesive				
Soft	4	3	3	3
Stiff	8	7	7	8
Very Stiff	16	12	12	14
Hard	32	22	23	26

BACK

1.1.4.2 General Procedures and Typical Values - (continued)

(3) Pile Supported Footings - (continued)

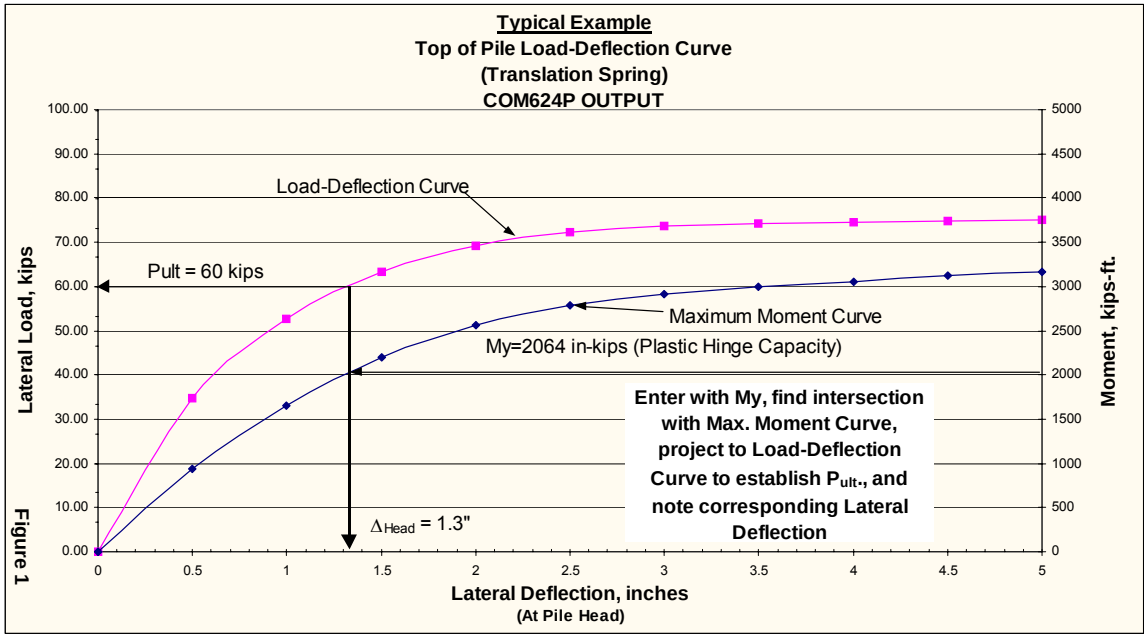

Translational Capacities:

The base shear resistance of pile supported footings, or caps, is typically not included in calculating the nominal passive resistance. The same equation used for determining the nominal translational capacity of footings should be used for pile caps, neglecting all base shear resistance. The nominal passive resistance of pile caps can be used for both seismic and nonseismic design conditions.

For nonseismic loading conditions the following nominal resistances in the following table may be used provided the site conditions generally satisfy the assumptions given below the table.

BACK

1.1.4.2 General Procedures and Typical Values - (continued)

(3) <u>Pile Supported Footings</u> - (continued)

Nominal Pile Translational Resistances (kips):

H-piles W=Weak S=Strong	SPT "Nc"*	HP 10x42		HP 12x53		HP 12x74		HP 14x89		HP 14x117	
Granular		W	S	W	S	W	S	W	S	W	S
V. Loose	4	12	21	14	25	25	43	29	50	41	69
Loose	10	13	23	16	27	28	48	33	55	46	82
Medium	30	16	26	17	31	31	53	37	62	51	86
Dense	50	17	29	20	34	34	59	41	69	57	93
Cohesive											
Soft	4	16	25	17	28	29	47	34	53	45	69
Stiff	8	20	34	22	37	38	63	43	70	59	94
Very Stiff	16	24	43	25	47	49	83	55	90	76	122
Hard	32	30	54	29	58	58	104	63	113	92	155

Pipe Piles	SPT "Nc"*	12x 0.25	12x 0.38	16x 0.38	16x 0.50	24x 0.38	24x 0.50
Granular							
V. Loose	4	22	29	43	52	85	103
Loose	10	25	32	48	57	95	113
Medium	30	29	37	54	65	107	130
Dense	50	31	41	60	71	118	143
Cohesive							
Soft	4	26	34	46	55	82	98
Stiff	8	34	44	60	72	104	126
Very Stiff	16	42	56	74	91	130	158
Hard	32	50	69	91	110	151	187

Prestressed Piles	SPT "Nc"*	12" Prest.	14" prest.	16" prest.
Granular				
V. Loose	4	12	16	23
Loose	10	15	18	25
Medium	30	18	20	29
Dense	50	20	23	31
Cohesive				
Soft	4	18	19	25
Stiff	8	22	23	31
Very Stiff	16	27	27	36
Hard	32	29	29	43

* The "Nc" values to use are the averaged "Nc" values over a depth of 8 to 10 pile diameters (8D to 10D).

BACK

1.1.4.2 General Procedures and Typical Values - (continued)

(3) Pile Supported Footings - (continued)

The above translational stiffnesses and allowable capacities are based on the Broms' method and the following assumptions:

- Free head condition, no applied moment
- Pile top at the ground surface
- Level ground surface
- One, uniform soil layer with uniform soil properties
- No groundwater
- Static loading, no cyclic soil degradation
- Constant pile properties and dimensions
- Stiffnesses are for first ½ inch deflection (initial secant modulus)
- Values are for "long" pile conditions and minimum pile embedment depths are required. If pile lengths are less than 75% of the assumed penetration lengths below, a separate Broms', COM624P or LPILE analysis is required.

	"Nc"	Assumed Length
Granular	4	55'
	10	50'
	30	40'
	50	35'
Cohesive	4	55'
	8	50'
	16	40'
	32	35'

The Foundation Designer should be consulted for piles installed in conditions outside of the above stated assumptions and/or a COM624P or LPILE analysis should be performed.

For seismic design conditions, the maximum moment capacity of the pile (My) must be calculated separately and compared to the COM624P or LPILE output to determine the nominal lateral resistance and associated deflection. An example is shown in Figure 1, on Page 1-38.

Translational Load -Deflection Curve:

Translational Load Nonseismic - Deflection estimates for piles designed under nonseismic conditions should be determined using the initial pile stiffness values given in the above tables extended up to the nominal pile resistance (bilinear curve). This curve, representing the pile group, is then added to the load-deflection curve developed for the pile cap. A COM624P or LPILE analysis may also be used as described below if so desired.

Translational Load Seismic - Deflection estimates for seismic design conditions are determined from the composite load deflection curves developed by combining the pile group stiffness from the COM624P or LPILE analysis with the stiffness contribution from the pile cap. An example of this procedure is provided in the section on "Load-Deflection Curves, Stiffness Iteration Analysis and Capacity Checks".

BACK

1.1.4.2 General Procedures and Typical Values - (continued)

(3) Pile Supported Footings - (continued)

Pile Group Reduction Factors and p-y Multipliers:

The p-y multiplier approach, utilizing the LPILE program, is recommended to evaluate the response of a pile group subjected to lateral loads. The p-y multipliers are applied to standard p-y curves to account for pile group effects. P-y multipliers are included in the LPILE program. The multipliers are dependent upon the soil type, soil density or consistency and pile spacing. The Foundation Designer should be consulted for the procedures to use in this design approach.

For nonseismic loading conditions, an alternative approach using the group reduction factors listed in the table below may be used. This table is for use with pile groups installed in cohesive soils only. No reduction factor is required for pile groups in cohesionless soils regardless of pile spacing or contact between the pile cap and the ground.

Pile Spacing (parallel to translation direction)	Reduction Factor
5 x Pile Diameters	1.0
3 x Pile Diameters	0.75

Note: Use linear interpolation between pile spacings of 3D and 5D.

Rotational Stiffnesses:

Normally the rotational stiffness should only include the moment versus rotation stiffness from the pile group. The pile cap is usually considered rigid in this analysis and no additional stiffness due to soil bearing at the base of the pile cap/footing is included. Therefore, the rotational stiffness of pile caps is simply a function of pile axial compression and the pile group layout. See the example problem in the Bridge Example Designs notebook for more details. Static formulas for pile compression are typically used. The computer program APILE2 may also be used for a more detailed analysis of the predicted load-deflection behavior of a single, axially loaded pile. This program takes into account unusual soil conditions and the nonlinear aspects of pile-soil interaction. The Foundation Designer should be consulted for axial pile stiffnesses using the APILE2 program.

The following formulas for axial pile stiffness may be used in developing rotational stiffnesses for pile supported footings. For friction piles, the APILE2 program may also be utilized to better model axial stiffness when axial loads are greater than about half of the nominal resistance of the pile.

End bearing pile:	Friction piles:
$Kv = \frac{AE}{L}$	$Kv = \frac{2AE}{L}$

with: Kv = Axial Pile Stiffness (kN/mm)
A = Area of pile normal to load
L = Length of pile
E = Young's Modulus of Pile Material

BACK

1.1.4.2 General Procedures and Typical Values - (continued)

(3) Pile Supported Footings - (continued)

Rotational Stiffnesses: - (continued)

Compute the rotation stiffness (M vs. ∅) for a pile group as follows:

Assume a pile head deflection for the pile farthest from the pile group centroid.

Using the appropriate relation from above, determine the pile force accompanying this assumed pile head deflection. Prorate the other pile forces by their location relative to the group centroid. Piles on one side of the centroid will have positive forces and piles on the other side will have negative forces (uplift).

Determine the pile group moment by summing the product of the pile force and the pile-to-group centroid distance for all piles. This is the moment (M) required to rotate the footing through an angle of ∅. Determine the angle ∅ as the arctan of the assumed extreme pile head deflection divided by the pile-to-centroid distance.

The relation of M to ∅ is the initial rotation stiffness.

Rotational Resistances:

For pile supported footings, compare computed pile loads to nominal axial pile resistances for seismic cases and to factored axial pile resistances for nonseismic cases, unless otherwise recommended by the Foundation designer.

Rotational Load-Deflection Curve:

Use the initial stiffness up to the resistance limit. The curve form is:

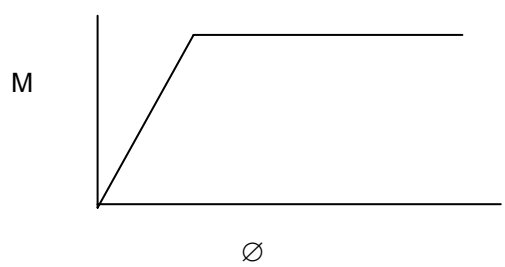

BACK

1.1.4.2 General Procedures and Typical Values - (continued)

4) **<u>Load-Deflection Curves, Stiffness Iteration Analysis and Capacity Checks</u>: -** Using the previous information one develops a composite load-deflection relationship for each applicable support spring. Next, an initial spring constant is assumed, the structure and loading analyzed and the resulting load-deflection position compared to the initial assumption. Cycling through this process may be needed to achieve reasonable closure. See the graphical explanation below.

It is also necessary to check the required resistance against the factored or nominal resistance. Resistance factors of 1.0 are typically used in the case of seismic design, however this should be verified by the Foundation Designer. Factored resistances are used for all other cases. For the rotational capacity, this is normally done by checking the resultant forces against the maximum (nominal), effective soil bearing resistance (footings) or nominal pile resistance.

For lateral pile resistances, the nominal resistance is either the maximum determined from the LPILE analysis (based on My of the pile for seismic design), or from the tables. The nominal resistance may also be a function of maximum allowable structural deflections. If the limiting resistance is exceeded when using the initial spring coefficient then modified springs are required as shown in the graphical explanation below.

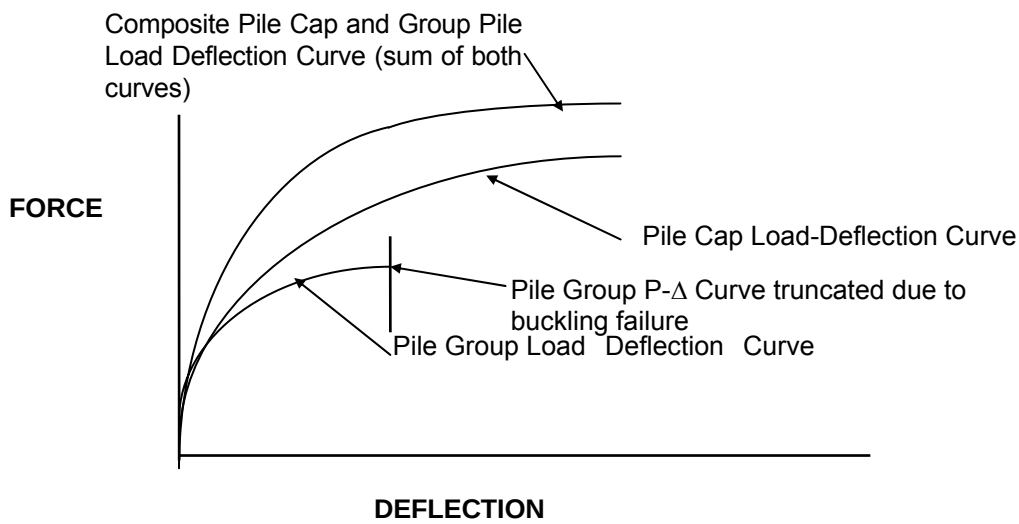

Development Composite Load - Deflection Curve

1.1.4.2 General Procedures and Typical Values - (continued)

4) <u>Load-Deflection Curves, Stiffness Iteration Analysis and Capacity Checks</u>: - (continued)

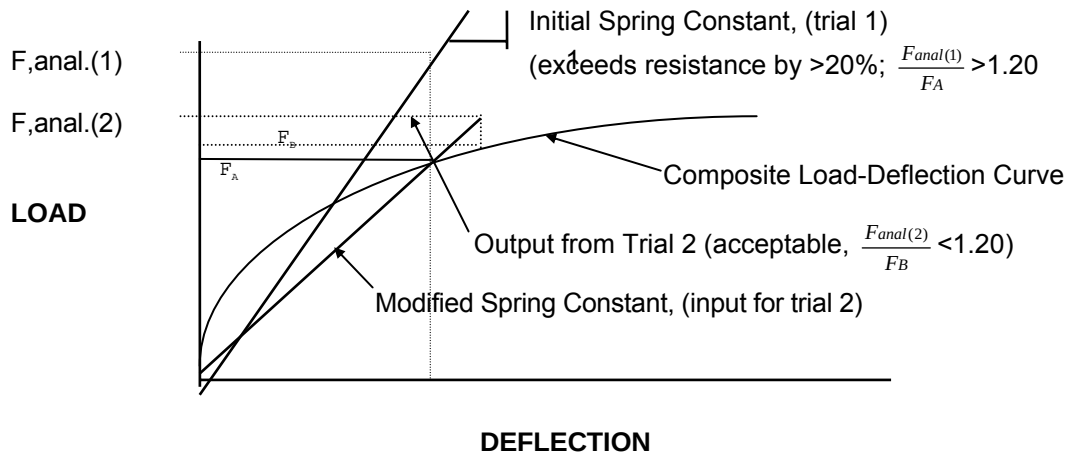

<u>Spring Iteration Process and Resistance Checks</u>

BACK

1.1.4.3 Drilled Shaft Modeling (Fully Coupled)

Programs M-STRUDL and COM624 or LPILE can be used in an iterative approach to model a drilled shaft supported structure. The approach is to determine the approximate force magnitudes for the controlling loading and then use these forces to develop a better representation of the superstructure/shaft/soil problem. This allows a good approximation of soil stiffness non-linearity as well as the non-linearity of the shaft-soil interaction.

The following steps would be typical for drilled shaft modeling for design and checking:

1. Develop a full M-STRUDL model (superstructure with substructure) using shaft fixity at two shaft diameters below the groundline. Using the model, run the controlling load case--typically seismic loading will be the controlling case and the worst effect, either longitudinal or transverse, will be used for the next steps.

2. . Develop COM624 or LPILE models (shaft with soil) for each bent using the full shaft from its tip to its connection to the superstructure.

3. Using the top of shaft shear and moment results from the first M-STRUDL, load the COM624 or LPILE models to develop a stiffness matrix for each shaft. This represents a condensing of the substructure/soil effect to the point of connection with the superstructure. The LPILE program can develop a stiffness matrix for you.

4. Develop a new M-STRUDL model using only the superstructure and supports represented by the COM624 or LPILE developed substructure stiffness matrices. Run the same controlling load case.

5. Use the top of shaft shear and moment results from this latest M-STRUDL to again load the COM624 or LPILE models to develop new substructure stiffness matrices.

6. Use the latest M-STRUDL model with the most recent substructure stiffness matrices and again run the same controlling load case.

7. Compare the results of this M-STRUDL with the previous M-STRUDL run for correlation. If the results do not correlate well, cycle through steps 5 and 6 to get better convergence. Results which change no more than 15% per cycle are normally sufficiently close and further cycling is not required.

A sample problem using this approach is in shown in the *Bridge Example Designs Notebook.*

BACK

1.1.5 Foundation Design

Foundation design should be performed in accordance with the most current version of the AASHTO LRFD Bridge Design Specifications. Foundation design should also follow the policies and guidelines described in the ODOT Geotechnical Design Manual, available through the ODOT Geo-Environmental Section web page.

FHWA foundation design manuals are also acceptable methods for use in foundation design. Subsurface investigations for all structures should be conducted in accordance with the AASHTO Manual On Subsurface Investigations (1988). Materials classifications should be in accordance with the ODOT Soil and Rock Classification Manual (1987).

1.1.5.1 Foundation Design Process

A flow chart showing the overall foundation design process, related to plans development, is provided in Figure 1.1.5.1A below. It is important for the Foundation and Bridge Designers to establish and maintain good communication and exchange of information throughout the entire bridge design process. Any questions regarding foundation design issues should be brought to the attention of the Foundation Designer as early as possible in the design process. For most typical bridge design projects two Foundation Reports are provided, the TS&L Foundation Design Memo and the Foundation Report. A description of the phases follows.

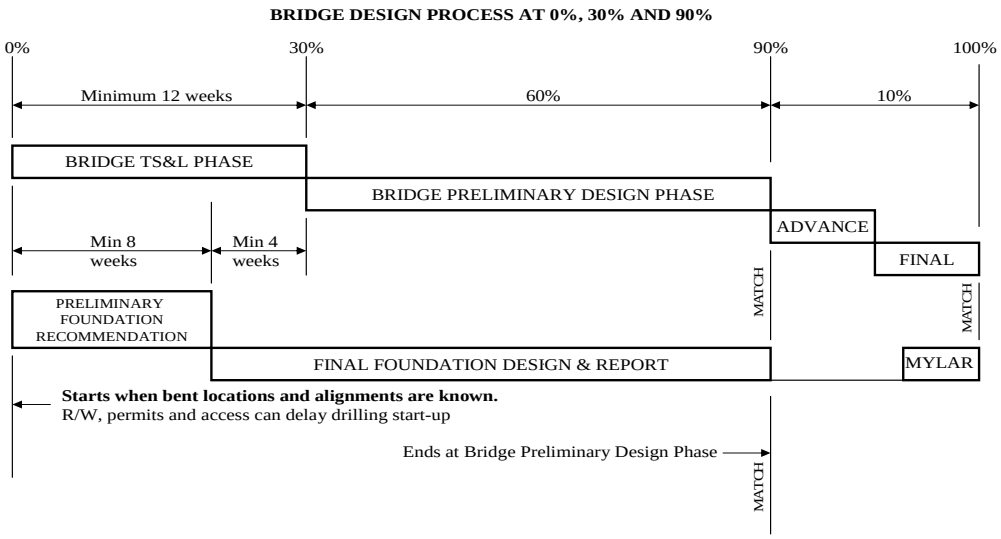

Figure 1.1.5.1A

BACK

1.1.5.1 Foundation Design Process - (continued)

(1) TS&L Foundation Design Memo – The purpose of this memo is to provide sufficient data for developing TS&L plans and cost estimates and for permitting purposes. The memo is generally provided before the subsurface investigation is completed. It provides a brief description of the proposed project, the anticipated subsurface conditions (based on existing geologic knowledge of the site and/or as-built information) and presents preliminary foundation design recommendations such as foundation types and preliminary resistances. The potential for liquefaction and associated effects are also briefly discussed. The memo is to be provided no later than two-thirds of the way through the TS&L design process.

(2) Foundation Report – This report is to be provided by the end of the Preliminary Bridge Design phase, which is usually 90% design. It provides the final foundation design recommendations for the structure and a Foundation Data Sheet for each structure. In order to conduct a proper foundation investigation and complete this report the Foundation Designer will need the following information:

- Bent locations and layout
- Proposed roadway grade (fill heights)
- Anticipated foundation loads
- Foundation size/diameter and depth required to meet structural needs.
- Allowable structure settlements (total and differential)
- Proposed retaining wall locations
- Estimated scour depths (from Hydraulics Report)
- Construction or Environmental constraints that could effect the type of foundation selected.

The report will contain the all geotechnical data on the site including final boring logs, Foundation Data Sheets, laboratory test results, foundation soil design parameters, recommended foundation types, sizes and resistances, and other recommendations. Construction recommendations are included along with project specific specifications, which are to be included in the contract Special Provisions. Seismic foundation design recommendations are provided including site characterization and soil coefficients, estimated ground acceleration and any liquefaction mitigation measures considered necessary (See Section 1.1.10).

The Foundation Designer should review the final Plans and Special Provisions for the structure to make sure they are consistent with the design recommendations provided in the Foundation Report. Any discrepancies should be resolved and Addendums to the report issued if necessary. A copy of the Foundation Report should be included in the project file and is made available to contractors through the Project Manager's Office when the project is advertised for bid.

1.1.5.2 Bridge Foundation Records

"As-constructed" records on existing bridge foundations may be found in the Salem Bridge Engineering Office from the following sources:

- Pile Record Books
- "As-constructed" Bridge Plans (available through ODOT intranet)
- Microfilm Construction Records
- Bridge Maintenance Files

BACK

1.1.5.3 Spread Footing Foundation Design

Spread footings are considered early on in the design process as a possible economical foundation option if the foundation conditions are suitable. The design of spread footings is usually an interactive process between the foundation and structural designers. The bottom of spread footings should be at least 6 feet below the bottom of the streambed unless non-erodable bedrock is present. The bottom of spread footings should also be below the estimated depth of scour for the 500 year flood event. The top of the footing should be below the depth of scour estimated for the 100 year event. Spread footings are not to be constructed on soils that may liquefy under earthquake loading. If spread footings are recommended the foundation designer will provide the following design recommendations in the Foundation Report:

(1) Footing Elevations – The elevations of the proposed footings will be provided along with a clear description of the foundation materials the footing is to be constructed on.

(2) Nominal and Factored Bearing Resistances – The nominal and factored bearing resistances will be provided for various effective footing widths likely to be used. For scour conditions the following resistance factors should be used unless otherwise justified.

100-yr scour or Overtopping Flood: 0.70
500-yr scour or Overtopping: 1.0
Extreme Event Limit I (Earthquake Loading): 1.0

Bearing resistances corresponding to 1 inch of settlement (Service Limit State) should also typically be provided unless other settlement limits are established by the structural designer. The structural designer should communicate all footing settlement limits to the Foundation Designer. For soil conditions, the bearing resistances provided assume the footing pressures are uniform loads acting over effective footing dimensions B' and L' (i.e. effective footing width and length ((B or L) -2e) as determined by the Meyerhof method. For footings on rock, the resistances provided assume triangular or trapezoidal stress distribution and maximum toe bearing conditions.

Minimum footing setback on slopes and embedment depths will be provided.

(3) Sliding Stability and Eccentricity - The following soil parameters will be provided for calculating frictional sliding resistance and active and passive earth pressures.

Soil Unit Weight, γ (soil above footing base)
Soil Friction Angle, ϕ, (soil above footing base)
Active Earth Pressure Coefficient, Ka
Passive Earth Pressure Coefficient, Kp
Coefficient of Sliding, tan δ

BACK

1.1.5.3 Spread Footing Foundation Design - (continued)

(4) Overall Stability – The foundation designer will evaluate overall stability and provide the maximum footing load which can be applied to the design slope while maintaining a factor of safety of at least 1.5 (1.0 for extreme event conditions).

1.1.5.4 Pile Foundations

If spread footings are unsuitable or uneconomical for foundation support, driven piles should be considered. Consult with the foundation designer to determine the most appropriate pile type, size and bearing resistance to support the desired pile loads. Typical pile types, sizes and factored resistances used on ODOT projects are listed below. The factored resistances provided are based on the factored structural resistance of the pile and are for use in preliminary design. The Foundation Designer should verify these resistances for final design and provide the nominal resistances required to achieve the factored resistance.

Steel and Timber Piling

TYPE	TYPICAL PILE BEARING RESISTANCE (tons)
	FACTORED RESISTANCE
TIMBER PILES	
Treated (untreated) timber	42
STEEL PILES	
HP 10x42	85
HP 10x57	110
HP 12x53	110
HP 12x74	160
HP 14x73	150
HP 14x89	180
HP 14x117	240
PIPE PILES	
PP 12.75 x 0.375	110
PP 14.0 x 0.438	130
PP 16.0 x 0.500	170
PP 20.0 x 0.500	215
PP 24.0 x 0.500	265

BACK

1.1.5.4 Pile Foundations - (continued)

Precast Prestressed Piling - see Drawing 43308.

The bending resistance of precast prestressed concrete piles is much less than steel piles of comparable bearing resistance. If seismic loads and lateral resistance are a concern, precast prestressed piles should normally not be used. If they are desired, either for aesthetic or corrosion considerations, a special pile design for each project will be necessary. If this is the case, notify the Foundation Designer as soon as possible so concrete piles can be considered in the foundation analysis and report.

Where precast prestressed piles are used as columns, see *Design Procedures for Pretensioned Prestressed Concrete Bearing Piles and Sheet Piles* by T. Y. Lin.

Drawing 43308 permits the use of a prestress force yielding a final concrete stress of 700 to 1000 psi depending on the range of stress that best suits handling needs. For example, a short pile requires less stress than a long pile for pickup and handling so the required number of strands could be fewer.

This change could affect the capacity of the pile if it is used as an unsupported column. If a stress greater than 700 psi is needed for your design, add a note to the plans requiring the contractor to use the appropriate prestress force.

Piling Considerations

(1) Pile Resistance – Nominal pile resistances will be provided according to AASHTO LRFD design procedures. The resistance factor will be provided according to the construction quality control method recommended in the Foundation Report (i.e. dynamic formula, wave equation, Pile Driving Analyzer, etc.). The foundation and bridge designers should confer to make sure the pile types and sizes selected take full advantage of the available geotechnical and structural resistances if possible.

(2) Downdrag Loads – Pile downdrag loads, due to soil settlement other than that caused by dynamic (seismic) loading, are added to the factored vertical dead loads on the foundation in the Strength Limit state. Load Factors for downdrag loads will be recommended by the Foundation Designer. Transient loads should not be included with the downdrag loads in either the strength or service limit state calculations. Downdrag loads resulting from liquefaction or dynamic (earthquake) induced soil settlement should be considered in the Extreme Event limit state pile design. Downdrag loads resulting from soil liquefaction are different than those caused from static loading and they should not be combined in the Extreme Limit state analysis.

At sites where downdrag conditions exist, the pile must overcome the frictional resistance in the downdrag zone during installation. This resistance should not be included in the calculation of available factored resistance since after installation it reverses over time becoming the static downdrag load.

BACK

1.1.5.4 Pile Foundations - (continued)

Piling Considerations - (continued)

(3) Uplift Capacity –In general, the uplift resistance is the same as the pile friction (side) resistance. Resistance factors and factored uplift resistances will be provided in the Foundation Report. Friction resistance in downdrag zones should be considered available for uplift resistance. The Foundation Designer should be consulted regarding the ability of the piles to resist uplift forces under various loading conditions (static or dynamic).

(4) Minimum Pile Tip Elevation – Minimum pile tip elevations (embedment depths) are typically required to meet one or more of the following design requirements:

- **a)** Lateral Load
- **b)** Scour
- **c)** Liquefaction
- **d)** Uplift loads
- **e)** Settlement and/or Downdrag
- **f)** Required soil/rock bearing strata.

The required pile tips elevations should be shown on the plans and labeled as "Required Pile Tip Elevations". Large lateral loads due to seismic, or other, conditions may result in the need for additional piling, or larger piles, in order to satisfy lateral deflection criteria or other requirements. This may in turn result in individual axial pile loads being much less than the maximum factored resistances available (either geotechnical or structural). Conversely, if pile tip elevations are needed to meet scour, uplift, or other requirements, the piles may need to be driven through very dense materials to nominal resistances much higher than needed for supporting just the axial loads. Close communication is needed between the Foundation and Bridge Designers to determine the most economical foundation design under these conditions.

(5) Pile Group Settlement – Pile group settlement should be compared to the maximum allowable settlement and pile depths or layout adjusted if necessary to reduce the estimated settlement to acceptable levels.

(6) Pile Group Effects - For pile group lateral load analysis use the p-y multiplier methods described in AASHTO and the FHWA Manual on the "Design and Construction of Driven Pile Foundations".

(7) Pile Spacing – Use a minimum spacing of 3' for piles placed underwater. Above water pile spacing should be no closer than 2.5B.

BACK

1.1.5.4 Pile Foundations - (continued)

Piling Considerations - (continued)

(8) Pile Tip Treatment - Where pile tip reinforcement is required, specify commercial cast steel points or shoes. Where closed-ended pipe piles are required, specify a welded plate the same diameter as the pipe pile. See the Figure 1.1.5.4A below for pipe pile tip details.

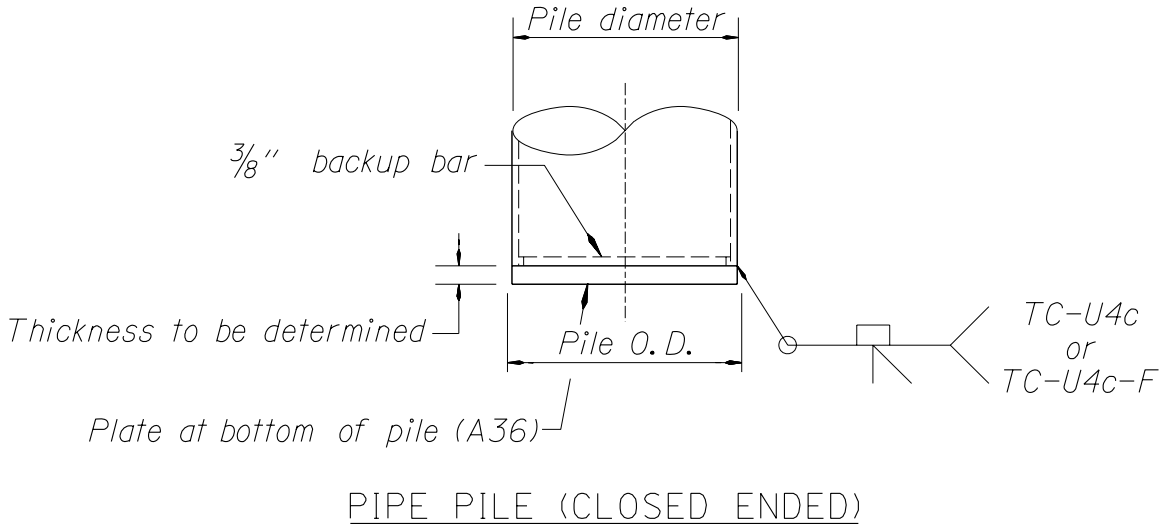

Figure 1.1.5.4A

BACK

1.1.5.4 Pile Foundations - (continued)

Piling Considerations - (continued)

(9) Pile Foundation Design Recommendations – The Foundation Designer will provide final foundation recommendations in the Foundation Report, or earlier in the design process as needed. The following recommendations will typically be provided as a minimum:

a) Pile Resistance: The nominal pile resistances (Rn)) will be provided along with estimated pile lengths for one or more pile types. These values may be in tables or graphs of Rn versus depth may be provided. Modified Rn values will be provided as necessary to account for scour, and/or liquefaction conditions. The resistance factor will be provided along with the recommended method of construction control (i.e. dynamic formula, wave equation, etc.). Downdrag loads, if present, will be provided along with an explanation of the cause of the downdrag loads. The depth or thickness of the downdrag zone will be provided.

b) The nominal pile uplift resistance will be provided either as a function of depth or for a given pile length (typically associated with the minimum tip elevation). The pile uplift resistance will be provided for normal static conditions and for any reduced capacity condition such as scour or liquefaction. The resistance factor will be provided.

c) P-Y Curves: Foundation design parameters will be provided to develop p-y curves for lateral load analysis using either the COM624 or LPILE computer programs. Two sets of data may be required, one for static conditions and one for dynamic (liquefied soil) conditions.

d) Required Pile Tip Elevations: Required pile tip elevations will be provided along with an explanation of their basis. These tip elevations (minimum pile embedments) should be checked to see if they need to be modified to meet other design requirements, such as lateral loading requirements. Any changes to the recommended required tip elevations should be reviewed by the Foundation Designer.

e) Special Provisions: The following foundation related items will be provided, as necessary, for Section 00520 of the project Special Provisions:

i. Wave Equation Input (if WEAP is specified for driving criteria)
ii. Recommended number of pile splices
iii. Pile tip treatment, tip reinforcement recommendations and specifications
iv. Recommendations regarding pile freeze, jetting, preboring or use of followers.

BACK

1.1.5.4 Pile Foundations - (continued)

Piling Details

(1) Steel Pile Footing Embedment to Develop Fixity - It may be necessary to develop lateral load resistance in piles or pile groups. To develop the required lateral load capacities, piles must be embedded in pile caps or footings adequately to develop the full moment capacity of the pile section.

If lateral load capacity is not needed, a pile embedment length of 12 inches is sufficient.

A simplified method of determining minimum pile embedment was developed as follows:

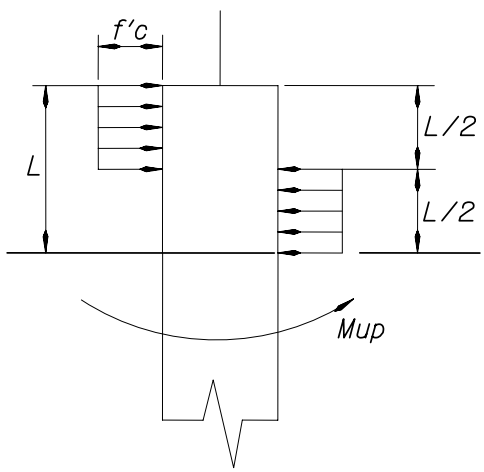

$$Mup = \phi\, f'c\, D\left(\frac{L}{2} \times \frac{3L}{4} - \frac{L}{2} \times \frac{L}{4}\right)$$

$$Mup = \phi\, f'c\, D\, L^2\, (3/8 - 1/8)$$

$$4Mup = \phi\, f'c\, D\, L^2$$

$$L = \sqrt{\frac{4Mup}{\phi\, f'c\, D}}$$

Figure 1.1.5.4B

Typical minimum embedment to develop fixity for f'c = 3.3 ksi and f_b = 36 ksi is:

Piles:	Minimum Embedment
HP 10X42 and HP 12x53	20”
HP 12X74 and HP 14X89	24”
HP 14X117	27”
PP 10 ¾ X 0.38 and PP 12 ¾ X 0.38	15”
PP 16 X 0.38 and PP 16 X 0.50	20”

BACK

1.1.5.4 Pile Foundations - (continued)

<u>Piling Details</u> - (continued)

(2) Pipe Pile Cover Plates - Provide a welded cover plate as detailed below in Figure 1.1.5.4C.

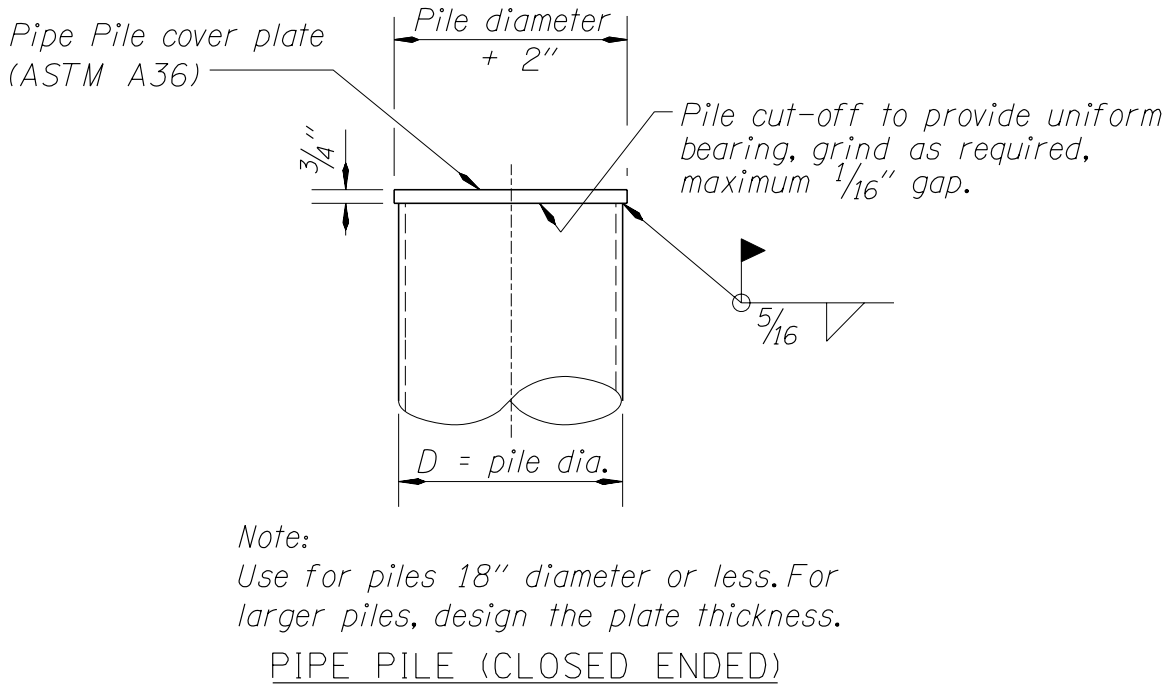

Figure 1.1.5.4C

(3) Steel Pile Splices - If splicing of steel piles is anticipated, show one or both of the following details on the plans.

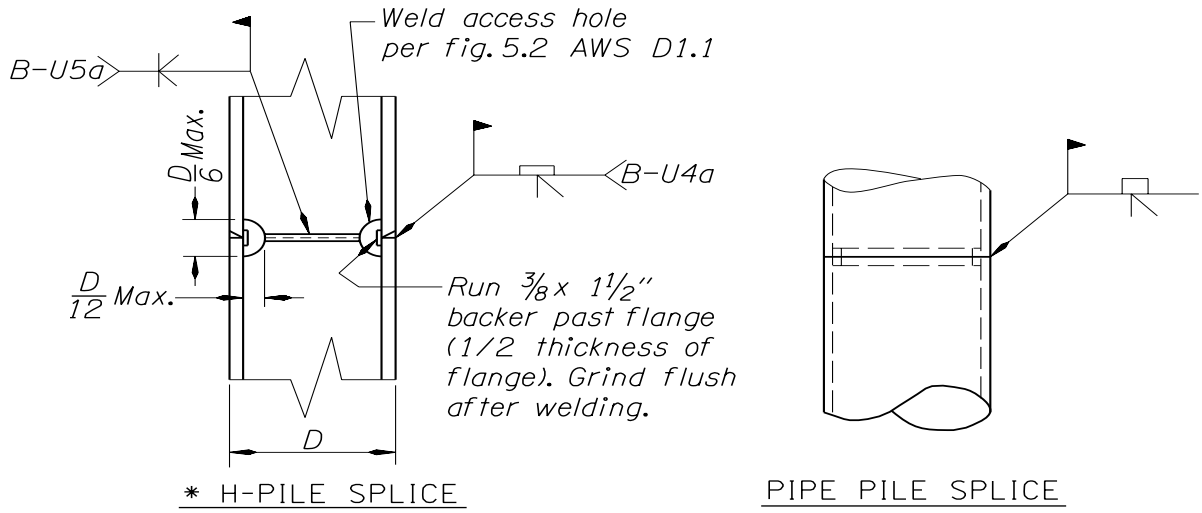

Figure 1.1.5.4D

Note – Manufactured A709-Grade 36 H-pile splices may be used if located a minimum of 40 feet below the bottom of the footing and installed according to the manufacturer's recommendations.

1.1.5.4 Pile Foundations - (continued)

Piling Details - (continued)

(4) Anchor Piles - Two methods of anchoring piles are shown. Other methods such as extending the top plate and using welded studs or other shear connectors may be appropriate.

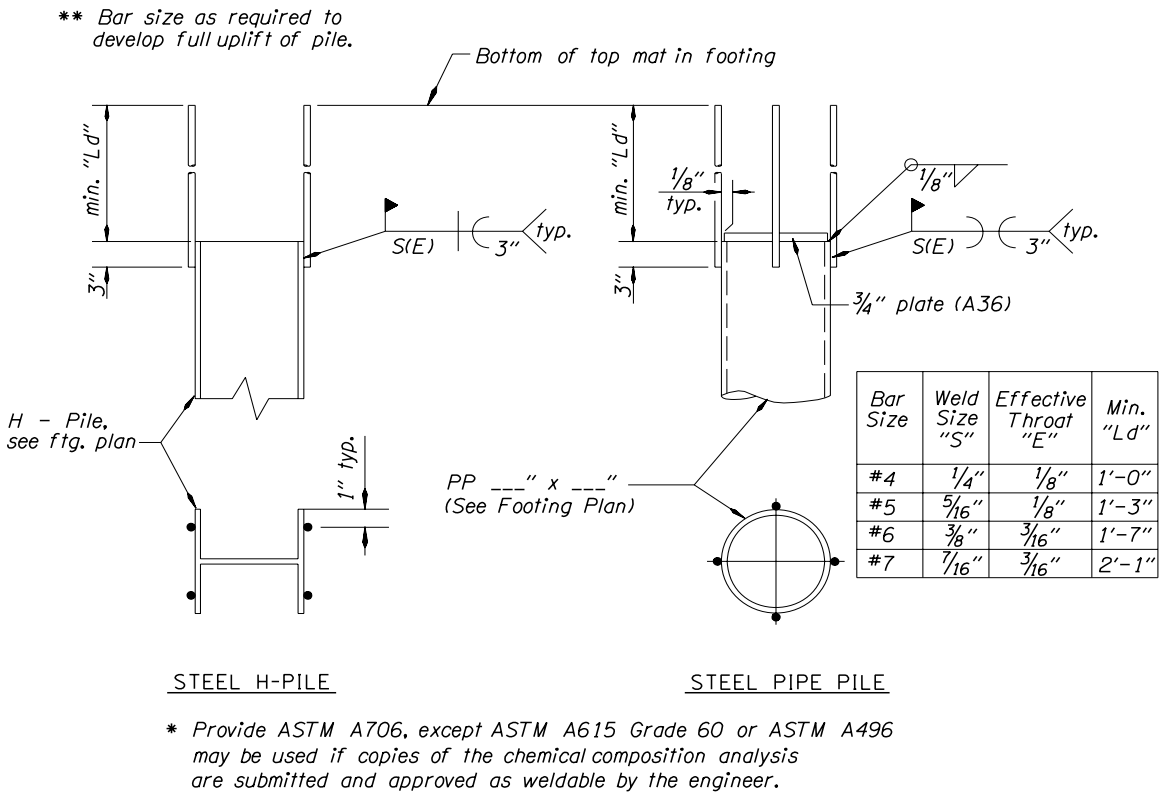

Bar Size	Weld Size "S"	Effective Throat "E"	Min. "Ld"
#4	1/4"	1/8"	1'-0"
#5	5/16"	1/8"	1'-3"
#6	3/8"	3/16"	1'-7"
#7	7/16"	3/16"	2'-1"

* Provide ASTM A706, except ASTM A615 Grade 60 or ASTM A496 may be used if copies of the chemical composition analysis are submitted and approved as weldable by the engineer.

ANCHOR PILE DETAILS

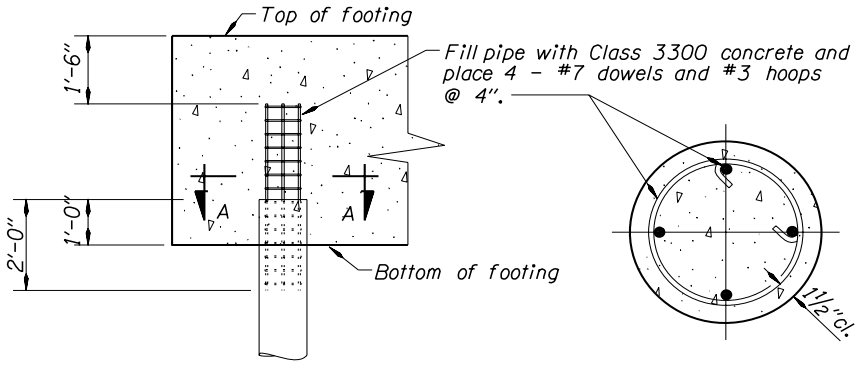

FILLED PIPE PILE ANCHOR DETAILS

Figure 1.1.5.4E

1.1.5.5 Drilled Shafts

Consider the use of drilled shafts for bridge foundations if foundation conditions are favorable and the design is economical (relative to other deep foundation designs). Environmental restrictions or lateral load requirements may also dictate the need for drilled shafts. Some foundation conditions (such as hazardous material sites, artesian groundwater pressures, very unstable soils) are not favorable for drilled shaft applications. Shaft constructability is an important consideration in the selection of drilled shafts. Consult with the Foundation Designer regarding these , and other, issues before selecting drilled shafts for foundation design. Common shaft sizes range from 3 feet to 8 feet in diameter in 6 inch increments. Larger shaft diameters are also possible. The minimum shaft diameter is 12 inches.

Drilled Shaft Considerations

(1) Drilled Shaft Diameter and Resistance – Nominal geotechnical resistances should be determined using AASHTO LRFD design methods. The Foundation and Bridge designers should confer and decide early on in the design process the most appropriate shaft diameter(s) to use for the bridge, given the loading conditions, subsurface conditions at the site and other factors. The location of drilled shafts should be made early in the design process so an exploration drill hole can be located as close as possible to all drilled shaft locations for design and construction purposes.

(2) Downdrag Loads – Downdrag loads, due to soil settlement other than that caused by dynamic (seismic) loading, are added to the factored vertical loads on the foundation in the Strength Limit state. Load Factors for downdrag loads will be provided by the Foundation Designer. . Downdrag loads resulting from liquefaction or dynamic (earthquake) induced soil settlement should be considered in the Extreme Event Limit State shaft design. Downdrag loads resulting from soil liquefaction are different than those caused from static loading and they should not be combined in the Extreme Event Limit state analysis.

(3) Shaft Uplift Resistance – Shaft uplift resistance is usually the same as the side friction resistance. Friction resistance in downdrag zones should be considered available for uplift resistance.

(4) Shaft Rock Embedment – Minimum shaft embedment depths, or rock sockets, may be required due to one or more of the following design requirements or conditions:

- Lateral Load, due to earthquake loading
- Scour
- Liquefaction
- Uplift loads
- Settlement and/or Downdrag
- Required soil/rock bearing strata.

The required rock socket embedment depths should be shown on the plans. Under this condition, shaft tip elevations should be shown as “Estimated Tip Elevations” since they are likely to change depending on the actual elevation of the top of rock or hard bearing strata encountered during construction. In these cases consider increasing the reinforcement length to account for variations in the top-of-rock surface. Extra reinforcement length can quickly and easily be cut off to provide the proper cage length once the final tip elevation is determined.

BACK

1.1.5.5 Drilled Shafts - (continued)

Drilled Shaft Considerations - (continued)

(5) Shaft Settlement – Refer to AASHTO methods to calculate the settlement of individual shafts or shaft groups. Compare this settlement to the maximum allowable settlement and modify the shaft design if necessary to reduce the estimated settlement to acceptable levels. End bearing shafts on soil will typically settle more than friction shafts in order to mobilize end bearing resistance.

(6) Shaft Group Effects – For group lateral load analysis use the p-y multiplier methods described in AASHTO and the FHWA Manual "Drilled Shafts: Construction Procedures and Design Methods"

(7) Shaft Spacing – Use a minimum spacing of 3' for drilled shafts.

(8) Shaft Foundation Design Recommendations – The Foundation Designer will provide final foundation recommendations in the Foundation Report, or earlier in the design process as needed. The following recommendations will typically be provided as a minimum:

- Shaft Resistance: The nominal shaft resistance (R_n) will be provided along with estimated shaft tip elevations for one or more shaft diameters. This may be in the form of tables or graphs of R_n versus depth may be provided. Modified R_n values will be provided as necessary to account for scour, liquefaction or downdrag conditions. The resistance factors used will be provided. Downdrag loads, if present, will be provided along with an explanation of the cause of the downdrag loads. The depth or thickness of the downdrag zone will be provided.

- Shaft Settlement: Estimates of shaft settlement will be provided for the range of loads expected. The Foundation design will need to know the anticipated service loads on the shaft for these calculations along with any limiting settlement criteria.

- Shaft Uplift Resistance: If required for design, the nominal shaft uplift resistance will be provided either as a function of depth or for a given shaft length. The uplift shaft resistance will be provided for normal static conditions and for any reduced capacity condition such as scour or liquefaction. The resistance factors used will be provided.

- P-Y Curves: Foundation design parameters will be provided to develop p-y curves for lateral load analysis. Two sets of data may be required, one for static conditions and one for dynamic (liquefaction) conditions if they exist.

BACK

1.1.5.5 Drilled Shafts - (continued)

Drilled Shaft Considerations - (continued)

- Special Provisions: The following foundation related items will be provided, as necessary, for Section 00512 of the project Special Provisions:
  - Designation as either a "friction" or "end-bearing" shaft; for cleanout purposes.
  - Permanent casing (if recommended by Foundation Designer or otherwise required).
  - Crosshole Sonic Log testing requirements.

(9) Crosshole Sonic Log (CSL) Testing – In general CSL tubes are installed in all drilled shafts unless otherwise recommended in the Foundation Report. CSL tubes may not be required in some cases where foundation conditions may be very favorable and there is redundancy in the foundation design. Consult with the Foundation Designer regarding the CSL testing that should be performed on the project.

The rule of thumb is one CSL tube per foot diameter of shaft, rounding up. They are equally spaced around the shaft as shown in Figure 1.1.5.5A below:

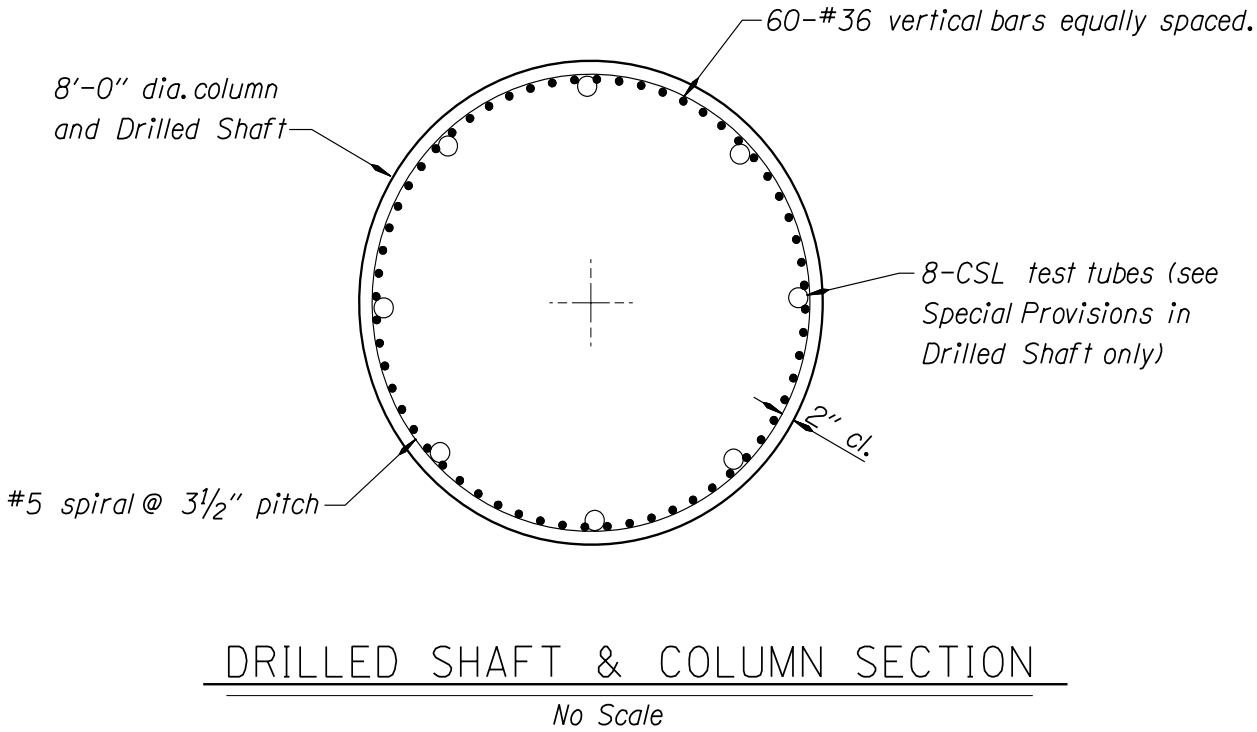

Figure 1.1.5.5A

1.1.5.5 Drilled Shafts - (continued)

Drilled Shaft Considerations - (continued)

(10) Reinforcement Spacing – Consider the spacing of the drilled shaft reinforcement with regards to placement of shaft concrete. Design the clear spacing between reinforcement bars of the rebar cage to the maximum opening possible as allowed by design codes. Consider the use of either spiral bars, hoops or bundled pairs to provide maximum rebar spacing. The purpose of this is to reduce the congestion of reinforcement to allow for the unimpeded flow of concrete through the shaft reinforcement to contact the side walls of the excavation.

(11) Shaft Concrete – Concrete for drilled shafts should generally have a high slump and relatively small aggregate size in order to properly flow through the shaft reinforcement and provide the required fluid pressures against the sides of the bore hole. This is necessary to develop the desired friction resistance. Placement of concrete may be by free fall (in dry holes) or by tremie pipe (in dry or wet holes). At the present time, free fall placement of concrete in dry holes is allowed to unlimited depths. Refer to the report "Effects of Free Fall Concrete in Drilled Shafts" (ADSC Report No. TL112 for more information.

(12) Cover Requirements – Concrete cover for drilled shafts should be at least 3 inches for shafts less than or equal to 5 feet in diameter. For shafts greater than 5 feet in diameter a concrete cover of 6 inches should be detailed.

(13) Reinforcement Connections – Do not specify hooked longitudinal bars at the top of the shaft (extending into footings or caps) that will conflict with temporary casing removal. Design and detail reinforcement considering the requirements of temporary casing.

(14) Reinforcement Splicing – For shafts constructed at locations where a minimum penetration into the rock (or hard strata) is required and the elevation of the top of rock is uncertain, consider adding additional lengths of reinforcement to avoid the need for splicing. Once the final tip elevation is determined, any remaining rebar length can be cut off and removed. Splicing of reinforcement is undesirable because it usually results in delaying the concrete pour which could lead to other problems. If splicing is required, provide splicing details on the plans.

(15) Shaft Elevations – Show or list the "Top of Shaft" elevation on the plans for each drilled shaft. This elevation is the top of the drilled shaft concrete. Also show or list shaft tip elevations. If shaft tip elevations are anticipated to vary due to uncertainties in the top of the bearing strata then label these as "Estimated Tip Elevations" and show the required penetration depth into the bearing strata.

(16) Permanent Casing – The use of permanent casing may be beneficial in locations especially where the top of shafts are constructed in open water such as rivers or lakes. The use of permanent casing can simplify construction by eliminating the need for any temporary casing and forms. If permanent casing is desired it should be taken into account in the structural analysis of the bridge because it increases the stiffness and strength of the shaft and may significantly affect the overall response of a bridge subject to large lateral loads. It also affects the geotechnical side resistance.

BACK

1.1.5.5 Drilled Shafts - (continued)

Drilled Shaft Considerations - (continued)

When permanent casing is specified remember to take OSHA requirements into account when determining casing lengths. OSHA may require casing to extend at least 2 feet above the ground surface during construction. This additional length may later be cut off and removed after the shaft is constructed.

If permanent casing is required, provide casing diameters, thicknesses and lengths in the special provisions.

(17) Drilled Shaft Preconstruction Meeting – Preconstruction meetings are held prior to beginning drilled shaft construction. This meeting should be attend by the structural designer who designed the shaft.

(18) Horizontal Tolerances – Consider the constructability of shafts relative to allowable horizontal tolerances. Large shafts are difficult to construct to precise horizontal tolerances. In general, do not design columns the same diameter as the shaft. It is recommended to design shafts to be generally 6 inches larger in diameter than the column they support. Consider the standard allowable horizontal tolerance of 3 inches when designing the column steel. Higher horizontal tolerances of up to 6 inches for shaft diameters greater than 5 feet may be allowed. Design the column cage to account for this tolerance.

1.1.5.6 Seismic Foundation Recommendations

The foundation designer shall provide the design Peak Bedrock Accelerations (PGAs) for the 500 and 1000 year recurrence events along with the AASHTO site soil coefficients. Liquefaction potential is addressed along with recommendations regarding estimated lateral deformations of embankments and/or dynamic settlement and downdrag potential. Downdrag loads resulting from liquefaction or dynamic compaction (settlement) will be provided. Liquefaction mitigation measures and recommendations are addressed if necessary (see Section 1.1.10.6 for Liquefaction Mitigation Procedure).

The foundation designer shall evaluate the overall stability of the approach fills leading up to the bridge. This analysis shall include both static and dynamic (seismic) analysis of embankment stability as related to the service and extreme limit state designs. This analysis is to determine potential impacts to the bridge and approach fills which may result from embankment instability, settlement or lateral displacements. Methods for evaluating overall embankment stability and for estimating settlements and displacements are described in the ODOT Geotechnical Design Manual. The overall stability analysis should include both non liquefiable and liquefiable foundation soil conditions as appropriate.

For the Service Limit State, the overall stability of bridge approach fills should provide a minimum factor of safety of 1.3, roughly equivalent to a resistance factor of 0.75.

For Extreme Limit State I (seismic loading) conditions, the overall stability and displacement of the approach fills should be evaluated. A minimum factor of safety of 1.0 should be provided for the overall stability of bridge approach fills under seismic loading. This criterion applies to sites with or without liquefiable foundation soils. In addition to this requirement, approach fill displacements (lateral and vertical) should be estimated and evaluated in terms of meeting the seismic design performance criteria described in Section 1.1.10.1. This performance criterion also applies to both liquefiable or non liquefiable foundation soil conditions. If estimated embankment displacements result in excessive damage to the bridge such that the performance criteria cannot be met, then mitigation measures should be pursued. The limits of liquefaction mitigation described in Section 1.1.10.6 also apply to all non liquefiable soil conditions that require mitigation measures to meet the specified performance criteria.

1.1.6 Underwater Construction

1.1.6.1 Underwater Foundation Design Considerations:

- Requirements for scour protection, potential scour depths and elevations, recommendations for riprap protection can be found in the Hydraulic Report.
- The seal size, which ultimately determines the cofferdam size should be large enough to accommodate the footing plus footing forms inside the cofferdam walers. A minimum of 2 feet on each side of the footing should be provided.
- Require the contractor to remove all underwater formwork.
- In streams where there is a potential for scour, riprap should be placed as soon as possible and before removal of the cofferdam.
- Scour calculations do not take into account debris loading. A pile of debris will cause a larger obstruction thereby increasing the scour depth.
- Streambeds are often "mobile" and the top few feet or so are moving downstream all the time. During extreme flood events the mobile streambed material cannot be counted on for protection.
- The depth component of the bearing resistance equation has the most significant contribution to the footing's ability to support the load.
- Riprap is not considered permanent protection against scour for seals.
- When placing a footing in a stream, the material around and over the footing has been reworked and doesn't have the in situ strength of the native streambed.
- Another factor that is not always taken into account during a scour calculation is that the stream may be degrading or have the possibility of degrading in the future.

BACK

1.1.6.2 Footing Embedment

On stream crossings and where horizontal forces are involved, the following sketch should appear on the plans if the foundation material is suitable.

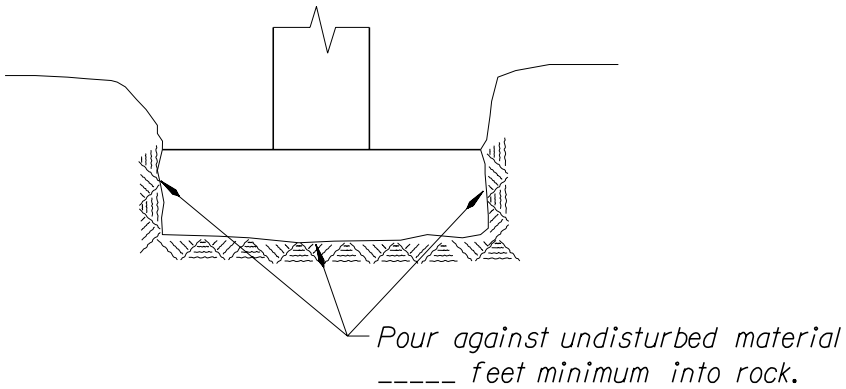

Figure 1.1.6.2A

The bottom of footings in streambeds shall be a minimum of 6 feet below the normal streambed, except in solid rock. If in solid rock, the top of the footing shall be flush with the rock line.

BACK

1.1.6.3 Cofferdams and Seals (Moved to 1.4.9.6)

1.1.7 Loads and Distributions

1.1.7.1 Dead Loads

(1) **Box Girder Deck Forms** - Where deck forms are not required to be removed, an allowance of 10 psf for form dead load shall be included.

(2) **Shortening** - Dead load should include the elastic effects of stressing (pre or post-tensioned) after losses. The long-term effects of shrinkage and creep on indeterminate reinforced concrete structures may be ignored, on the assumption that forces produced by these processes will be relieved by the same processes.

(3) **Utilities** - Where holes are provided for future utilities, estimate the dead load of such utilities as that for a water-filled pipe of 2" smaller nominal diameter than that of the hole. For 12" holes, the dead load may be assumed to be 90 plf.

(4) **Wearing Surface** - Allow for wearing surface (psf) (if the approach pavement is in doubt, assume AC.)

	present w.s.	future w.s.
(A) Structure 250' or less in length		
With PCC approach pavement	0	25
With AC approach pavement	25*	25
(B) All structures over 250' in length	0	25

*Design for a total of at least 50 psf even if no "present" wearing surface is planned. If the actual wearing surface exceeds 50 psf (such as for crown or Superelevation buildup), use the calculated value plus 25 psf for future wearing surface.

BACK

1.1.7.2 Live Loads

(1) **New Vehicular Traffic Structures** - Design by *AASHTO LRFD Bridge Design Specifications* using all of the following loads:

Service and Strength I Limit States:

- HL-93: Design truck (or trucks per LRFD 3.6.1.3) or the design tandems and the design lane load.

Strength II Limit State:

- ODOT OR-STP-5BW permit truck.
- ODOT OR-STP-4E permit truck.

Note: ODOT Permit Loads are shown in Figure 1.1.7.2A. In May 2006, ODOT Permit Load designations were changed as follows:

OR-STP-5B	**changed to**	**OR-STP-4D**
OR-STP-5C	**changed to**	**OR-STP-4E**
OR-STP-5BW	**no change**	

Axle weights and axle spacing's did not change, only the designations.

For single-span bridges with prismatic girders, Figures 1.1.7.2B to 1.1.7.2E are provided to help determine the controlling permit truck for various span lengths.

BACK

1.1.7.2 Live Loads - (continued)

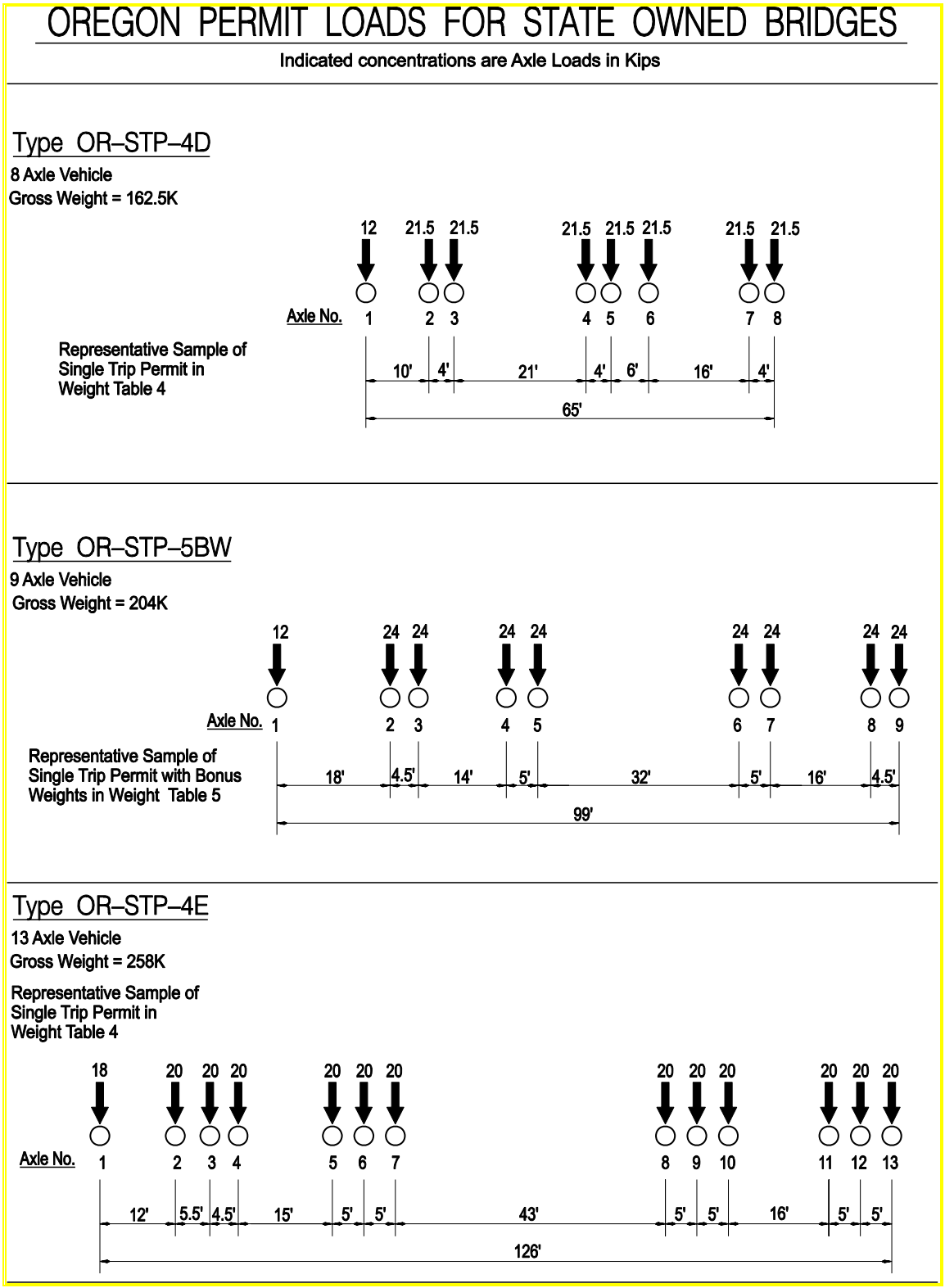

Figure 1.1.7.2A

1.1.7.2 Live Loads –- (continued)

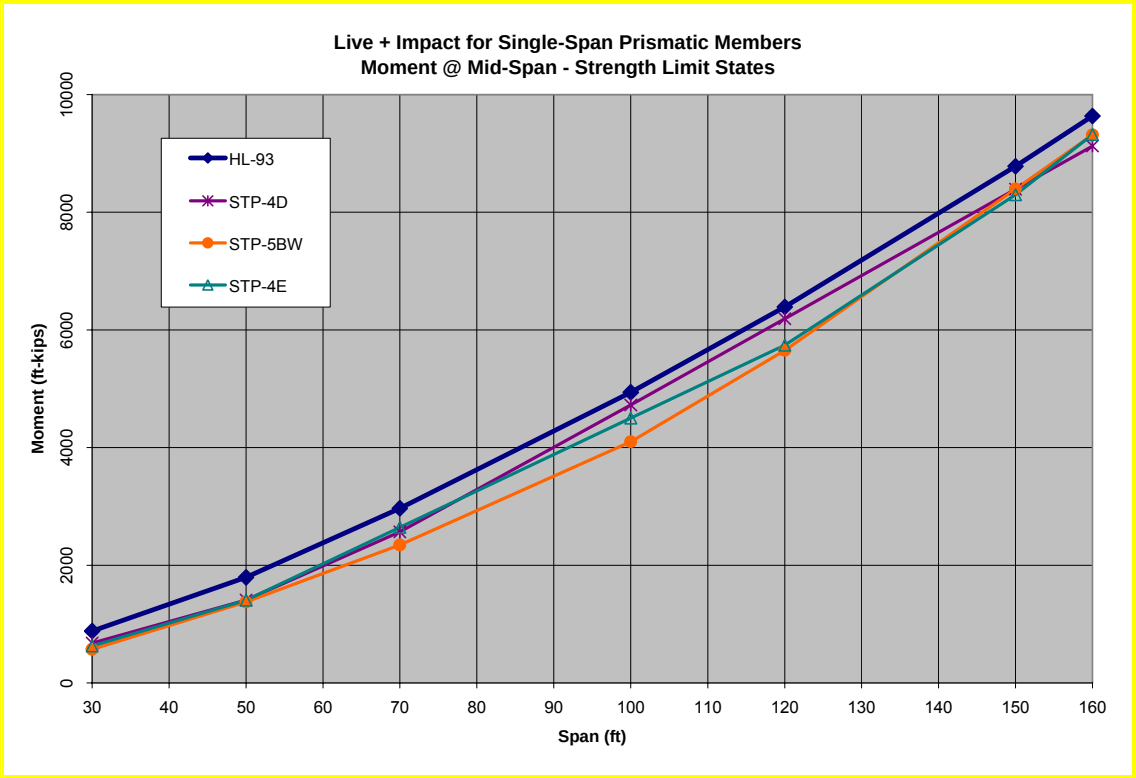

Figure 1.1.7.2B

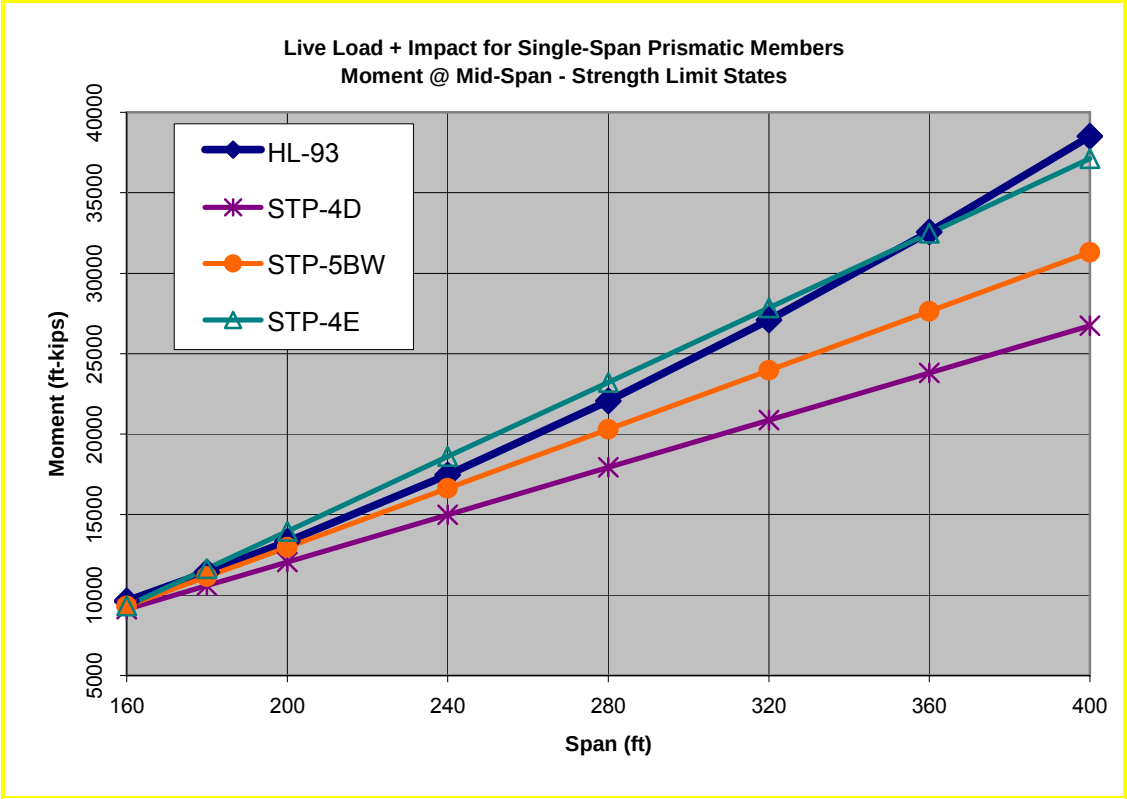

Figure 1.1.7.2C

1.1.7.2 Live Loads – (continued)

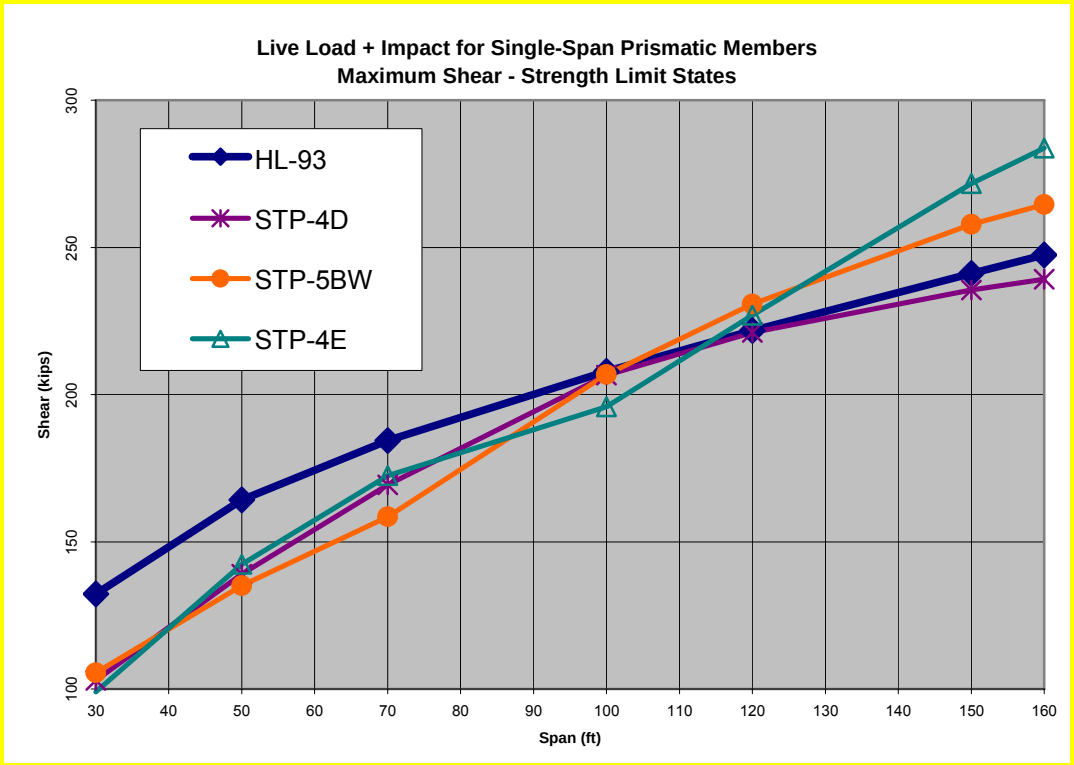

Figure 1.1.7.2D

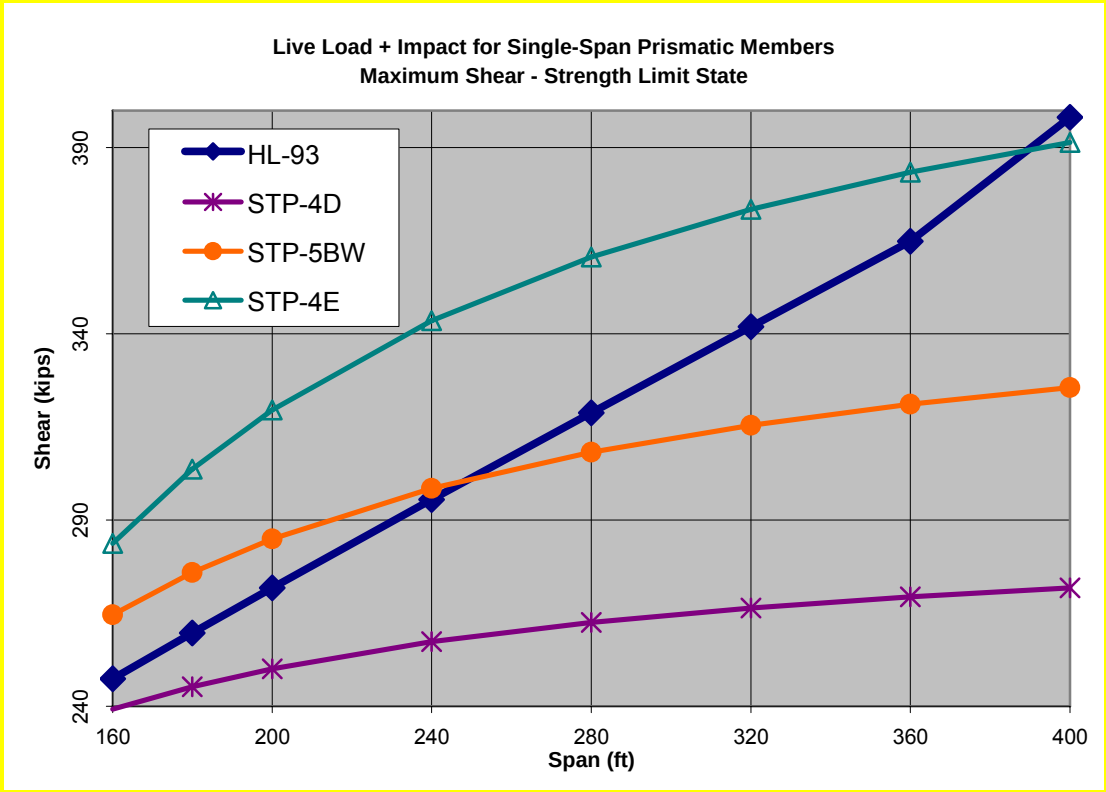

Figure 1.1.7.2E

1.1.7.2 Live Loads - (continued)

(2) **Pedestrian Structures -** For bridges designed for only pedestrian and/or bicycle traffic, use a live load of 85 psf. If an Agency design vehicle is not specified, use alternate live load of 10,000 lb., or AASHTO Standard (H-10 Truck) loading as shown in Figures 1.1.7.2F and 1.1.7.2.G below to check the longitudinal beams. A vehicle impact allowance is not required. For a pedestrian and/or bikeway bridge with less than 6' do not consider the maintenance truck. See also the AASHTO "*Guide Specifications for Design of Pedestrian Bridges".*

(3) **Widening of Vehicular Traffic Structures** – When widening an existing structure, the widening will generally be designed using the loading given in 1.1.7.2(1). Designs using a lesser design live load will require an exception letter from the State Bridge Engineer. Live loading will never be less than the design live load for the existing structure.

(4) **Structure Repair and/or Strengthening** – When repairing or strengthening an existing structure it is not necessary to meet the loading given in 1.1.7.2(1). Design repair or strengthening projects for the maximum load effect from the following permit trucks using the Strength II Limit State (see Figure 1.1.7.2A):

- ODOT OR-STP-4D
- ODOT OR-STP-5BW
- ODOT OR-STP-4E

For single-span bridges with prismatic girders, Figures 1.1.7.2B to 1.1.7.2E are provided to help determine the controlling permit truck for various span lengths.

For repair and/or strengthening of prestressed concrete structures, ensure the requirements of Service I and III Limit States are satisfied using HL-93 loading.

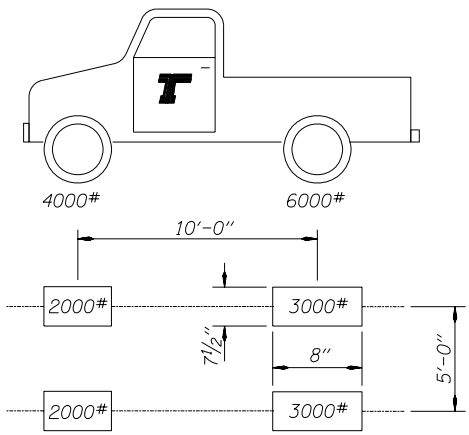

Alternate 10,000 lb. Live Load
Figure 1.1.7.2F

6'-0" < Clear deck width <10'-0" 10,000 lb. (alternate live load)
10'-0" < Clear deck width <12"-0" 20,000 lb. (H-10 Truck)

BACK

1.1.7.2 Live Loads - (continued)

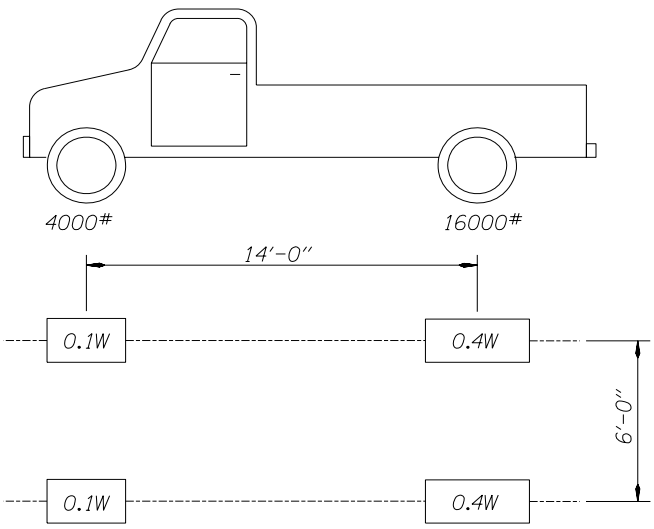

H-10 Truck
Figure 1.1.7.2G

1.1.7.3 Thermal Forces

Use the following temperature ranges:

		Metal Structures	Concrete Structures
Section I	Mild Climate	$+10^0$ F. to $+110^0$ F.	$+22^0$ F. to $+72^0$ F.
Section II	Moderate Climate	-10^0 F. to $+120^0$ F.	$+12^0$ F. to $+82^0$ F.
Section III	Rigorous Climate	-30^0 F. to $+120^0$ F.	0^0 F. to $+82^0$ F.

Section I designates that portion of the state west of the Coast Range, Section II the valley region between the Coast Range and Cascade Mountains, and Section III the Cascade Mountains and all of eastern Oregon. For structures in the Columbia River Gorge, use Section III.

Figure the rise and fall in temperature from an assumed temperature at time of erection. The annual mean temperature for Sections I and II is 52^0 F. and for Section III is 47^0 F.

1.1.7.4 Ductility, Redundancy and Operational Importance (LRFD 1.3.3, 1.3.4 & 1.3.5)

Section I of the LRFD Bridge Design Specifications provides three adjustment factors; η_D for ductility, η_R for redundancy and η_I for operational importance. Apply the ductility and redundancy factors per LRFD without change. Submit a justification to the State Bridge Engineer before using a redundancy factor < 1.0. For the operational importance factor, consider all bridges as "typical" (η_I = 1.0).

BACK

1.1.7.5 Sidewalk Loading

For sidewalks not separated from traffic by a structural rail, account for the potential for a truck to mount the sidewalk. Design the sidewalk for the greater of:

- 0.075 ksf pedestrian loads considered simultaneously with the vehicular load in the adjacent lane as stated in Section 3.6.1.6 of the LRFD Bridge Design Specifications. Per 3.6.2 in LRFD, impact should not be applied to pedestrian loads.

- The LRFD design truck placed with a line of wheels 2.0 ft from the face of rail. Do not apply a lane load with the design truck, but do include impact. Consider this load only under the Strength I limit state. Do not consider trucks or vehicle loads in adjacent lanes. Do apply the multiple-presence factor (m) for this case.

In addition to the above cases, ensure the supporting member (exterior girder) is adequate for HL-93 loading should the sidewalk be removed and a standard concrete barrier (per BR200) be placed at the edge of deck.

1.1.7.6 Shear Correction Factor for Skewed Girders

Apply a live load shear correction factor according to Table 4.6.2.2.3c-1 in the LRFD Bridge Design Specifications to the critical shear section near the support for exterior longitudinal beam (girder) members that are on skewed bents. Vary the correction factor along the length of the girder linearly from full value at the critical shear section to zero at midspan.

For interior girders, apply a portion of the exterior girder correction factor (CF_{ext}) as follows:

Side-by-side slabs or boxes $CF_{int} = 1 + 0.5 * (CF_{ext} - 1)$

Girder bridges and spread slabs or boxes $CF_{int} = 1 + 0.25 * (CF_{ext} - 1)$

The shear correction factor is intended to protect against increased loading at obtuse corners. Therefore, the additional shear capacity is really only needed at the obtuse corners. However, for simplicity of construction it is recommended that the both obtuse and acute girder ends be detailed the same.

Where additional steel to meet the shear correction factor loading is minor, designers should consider whether or not it is economical to detail interior girders the same as exterior girders. This may often be the case for precast, prestressed concrete members.

Standard drawings for precast, prestressed members assume each member will have the same shear details at each end of the bridge. For simplicity of construction it is recommended that both ends be detailed the same. In the rare case when ends are not detailed the same, contract provisions should be added to ensure the intended bent location for each girder end is clearly marked on the girder before the girder is transported to the job site.

BACK

1.1.8 End Bents

1.1.8.1 Determining Bridge Length

Options for the end bent in relation to the end fill intersection with the finish grade include:

- Option A, no wingwalls, but a longer structure than for options B and C.
- Option B, the structure length is shorter, but short wingwalls to retain the fill.
- Option C, the structure length is shorter yet, but longer wingwalls to retain the fill.

Generally, option B will provide the least cost, especially for prestressed slab spans. For option C, larger longitudinal forces from lateral soil loads must be resisted by the superstructure and substructure.

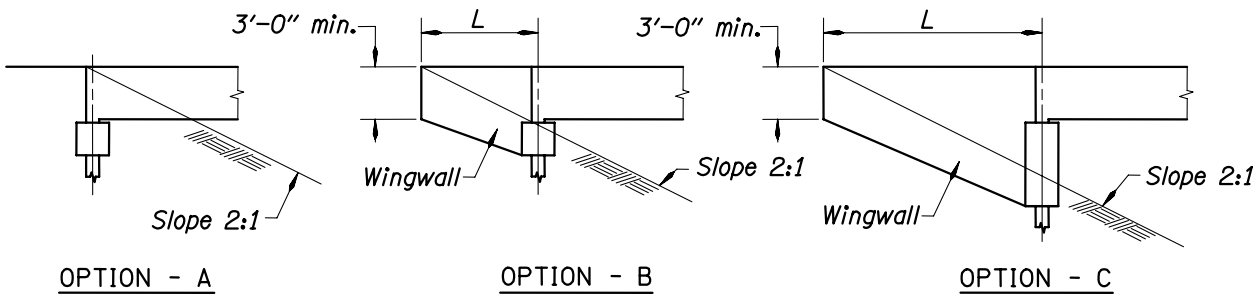

Figure 1.1.8.1A

BACK

1.1.8.2 Wingwall Location

Wingwalls for end bents may be located as follows:

- Walls parallel to the structure are used for filled or "false" (unfilled) bents. These are generally used for grade separation structures where the face of the bent is quite a distance back from the toe of the slope under the structure.

- Walls parallel to bridge bents are generally avoided due to safety or stream flow considerations.

- Walls at an angle to both structure and lower roadway or stream. The angle is generally half the angle between the structure and the lower roadway or stream center lines, as this usually leads to a minimum length wall. The end of the wall is determined by plotting final contours off the upper and lower profile lines. The point where the contours of equal elevation intersect determines the location of the end of the wall.

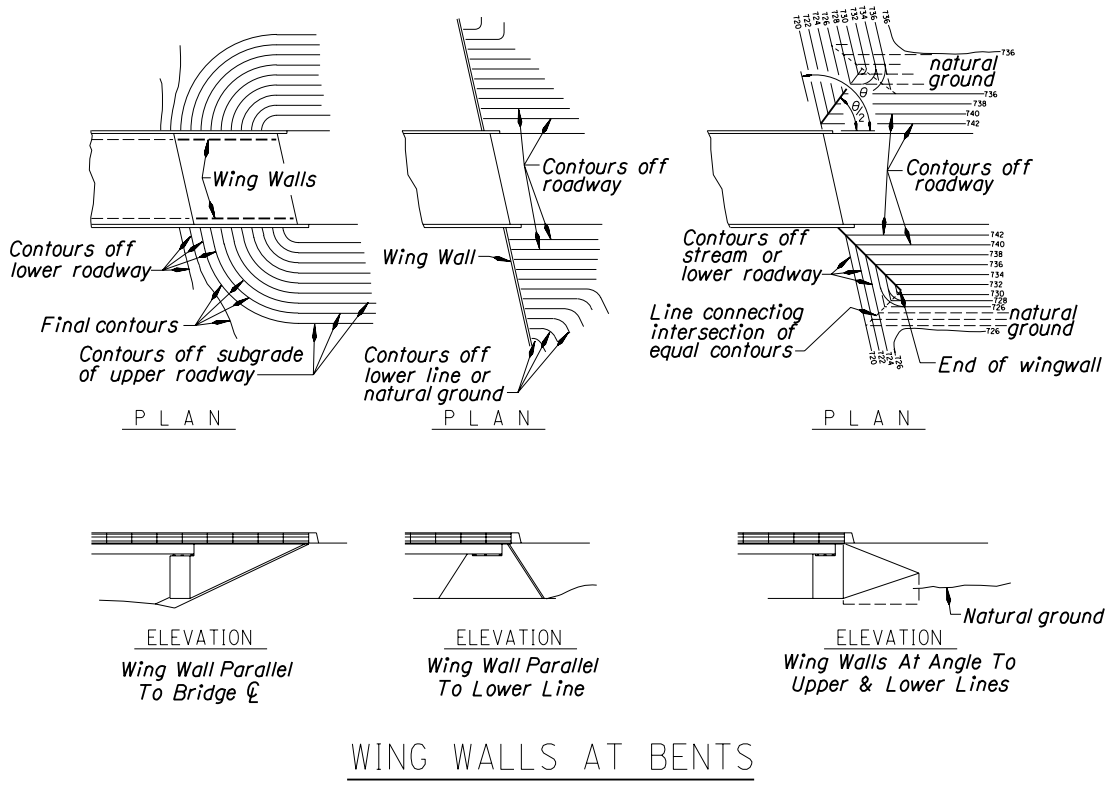

Figure 1.1.8.2A

BACK

1.1.8.3 Wingwall Design and Construction

For cantilever wingwalls on abutments with relatively stiff footings (footing width is at least 3 times abutment wall thickness), the horizontal reinforcement in the abutment wall resisting the moment caused by earth pressure on the wingwall need not extend farther from the wingwall-abutment juncture than the following:

For the top 2/3 of the abutment wall height	1.5H
For the bottom 1/3 of the abutment wall height	0.75H

Where abutment walls with wingwalls are designed with thickened tops for bearing seats or backwalls, those thickened portions should be designed to carry 1/2 to 2/3 of the bending moment in the upper half of the abutment wall. Reinforcing between the abutment wall and the wingwall should extend beyond the juncture enough to develop the strength of the bar reinforcement.

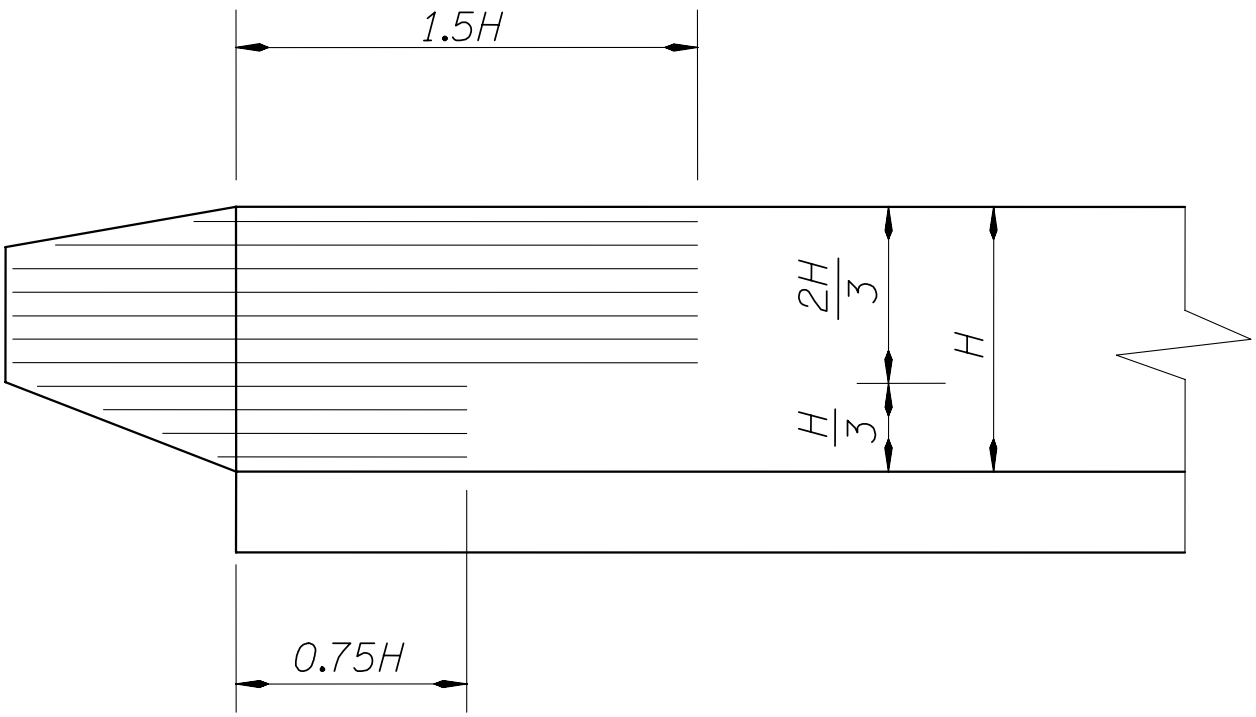

Figure 1.1.8.3A

1.1.8.3 Wingwall Design and Construction - (continued)

Construction

When wingwalls are cantilevered from an abutment or pilecap, the Designer should consider all stages of construction. If the abutment or pilecap would be unstable or overstressed under the dead load of the wingwalls before the superstructure and/or backfill are placed, the "Bent Construction Sequence" on the plans should require that the concrete in the wingwalls not be placed until the superstructure and/or backfill are in place. Do not count on there being soil under the wingwall unless the wall has its own footing.

The height of the wingwall at the outer end of the wall should be a minimum of 3 feet. The slope of the bottom of the wall should be a maximum of 2:1.

The Special Provisions and detail drawings should require that the embankment fill be placed to the elevation of the bottom of the wall before the wingwalls are constructed. In other words, bridge end bent wingwalls shall be cast against undisturbed material or well compacted backfill. **The designer may want to use some discretion in this matter. A 24' wall would normally always need to be constructed on compacted fill, while a 6' wall could be constructed and backfilled at later time.**

For walls shorter than about 8', the bottom of the wall can be formed level, at the discretion of the Designer or at the contractor's option. Note: Region 4 prefers all wingwalls supported by the bridge end bent to be constructed with a level bottom.

Due to concerns about stability and the potential for migrating of fresh concrete over the top of wingwall forms, the slope of the top of a wingwall should not exceed the maximum slope of the adjacent embankment nor 1.5:1 without a special stability investigation.

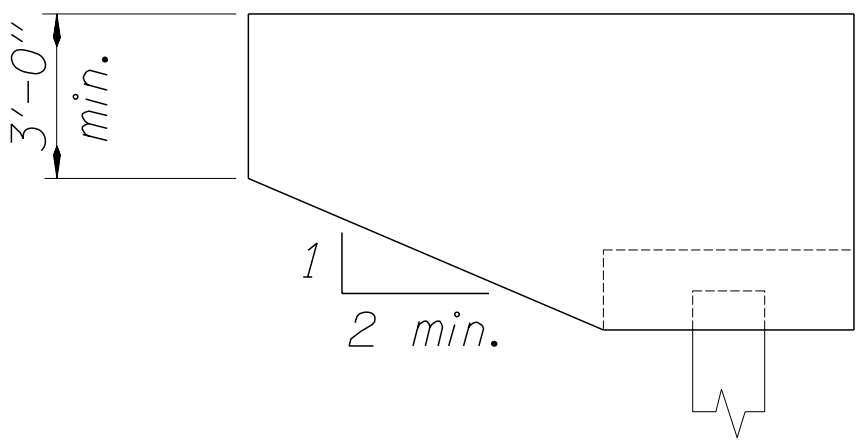

Figure 1.1.8.3B

1.1.8.4 End Bents

General - Where end bents or retaining walls are located adjacent to roadway construction, locate the top of footings at or below the elevation of the bottom of the roadway subgrade. In other locations, the top of the footing should generally be a minimum of one (1) foot below the surface of the ground. The effect of items such as utilities, ditches and future widening should also be considered.

Design - For end bents supported on piles, consider the lateral load of the bridge end fill in designing the bent. It is desirable to minimize the height of the bent to reduce the amount of lateral load that must be resisted by the end bent. However, increases in height to mobilize the passive soil pressure for seismic resistance may be necessary.

Integral Abutments - One of the most important aspects of design, which can affect structure life and maintenance costs, is reduction or elimination of bridge expansion joints and bearings. The main benefit of integral structures is the elimination of expansion joints and bearings. Integral abutments also reduce construction time, increase redundancy, and simplify design and construction. Consider integral or semi-integral abutments for structures of medium to short structure length.

Integral abutments could reduce the longitudinal and transverse force effect considerably in a continuous bridge with expansion end bent connections.

For a continuous bridge with expansion end bent connections, the interior bents take all of the longitudinal and transverse force effects. By using integral abutments in place of the expansion end bent connections, some of the longitudinal and transverse forces are distributed into the integral abutment (piles and backfill soils), thereby reducing the net forces on the interior bents.

Integral abutments may be used under the following conditions:

1. When the end bent is founded on piles.
2. When bed rock is a minimum of 15 feet from the bottom of the pile cap. Avoid using pre bored piles when bed rock is close to the surface, since this type of construction has been uneconomical.
3. When there is negligible potential of abutment settlement.
4. When the radius of horizontal curvature is greater than 1200 ft.
5. When the skew angle is less than 30 degrees.

BACK

1.1.8.4 End Bents – (continued)

Design Guidelines for Integral Abutments:

1. Use a U-shaped end bent (wingwalls parallel to roadway alignment) if possible.

2. Use H-pile with strong axis in the direction of temperature movement See Figure 1.1.8.4A.

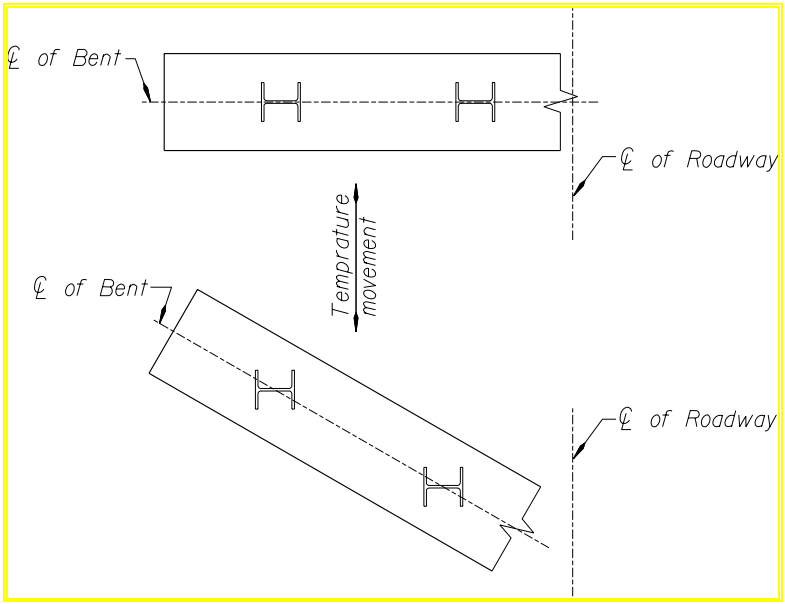

Figure 1.1.8.4A

3. Embed piles into the pile cap to develop moment fixity. See 1.1.5.4 Piling Details (1)

4. Detail piles of integral abutments to resist uplift force from temperature movement generated from differential heat on the deck.

5. Consider longitudinal loads induced into integral abutment piles at the lower elevation end bent due to braking force in addition to temperature change. This force increases as the grade profile becomes steeper. Similarly, piles at the lower elevation end bent shall be designed to resist the component of the earth pressure (lateral and vertical) from the higher elevation end bent.

6. Develop a COM624 or LPILE model using the full pile for soil and pile interaction. Evaluate pile deflections, bending moments and stresses using the LPile or COM624 computer program analysis.

7. Limit the maximum range of each end bent movement due to temperature rise and fall at all service limit states to three (3.0) inches, and limit yielding of each H-pile flange to 20% of the flange area. See Figure 1.1.8.4B

BACK

1.1.8.4 End Bents – (continued)

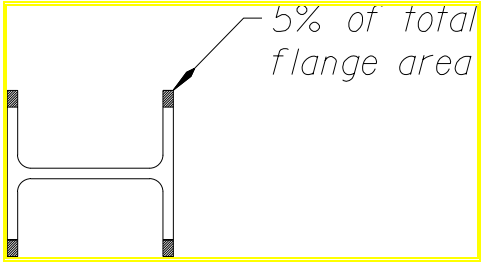

Figure 1.1.8.4B

8. Consider relative stiffnessesstiffness's of the superstructure and substructure, and any asymmetric span lengths in calculating end bent movement. The movement of the end bents due to temperature fall or rise may require a limitation less than three (3.0) inches when the structure has multiple spans with fixed interior bents.

9. Consider the effect of torsion in all components connected to abutments in integral end bent design
10. Consider the combination of worst case events (except seismic) with temperature rise and fall.

11. Specify placement and compaction requirements and an increased frequency of field density test requirements (minimum of two tests per stage of construction at each end bent) of the backfill material to achieve consistent soil stiffness behind both end bents.

12. Consider the friction force between the base of the impact panel and structure back fill (compression and tension) in the superstructure design at the service limit state (assume friction coefficient of 0.54 unless specific consideration is made to reduce friction).

13. Connect superstructure and end bents with a closure pour. Require a minimum of three days wait period between concrete deck placement and closure pour to release shrinkage stress in bridges with steel superstructures and include long term creep in your design for concrete superstructures. Include a note which requires backfill behind the abutment after closure pour.

14. Provide an expansion joint between the end panel and the approach pavement where the range of abutment movement is one (1) inch or less. Where the range of abutment movement exceeds one (1) inch, fix the end panel and provide an expansion joint between the end panel and the deck.

15. In a staged bridge construction, to minimize rocking effects of girders in next stage of construction due to adjacent traffic loading, provide an expansion joint or closure segment in the pile cap located between the stages of construction. For integral abutments, consider the effects of traffic vibrations on adjacent bridge girders and the concrete deck in next stage of construction.

16. Specify deck casting sequences and deck closure pours at integral abutment connections and specify the range of temperature when the contractor may place the concrete on the plans and in the special provisions. Keep the range of temperature in the closure pour to not adversely affect the pile behavior during temperature fall or rise.

BACK

17. Do not use integral abutments supported by an MSE retaining wall. Semi-integral abutments are preferred in these cases.

1.1.8.4 End Bents – (continued)

Semi-Integral Abutments - All limitations and design recommendations for integral abutments are applicable to semi-integral abutments..

Two points that need to be evaluated on semi-integral abutments (especially on skewed bridges) are torsional forces affecting the bearings, and the effectiveness of shear keys used. If geometry requires a stiff footing, this type of construction is recommended. Use semi- integral abutments, instead of integral abutments, when end bents are constructed on spread footings, drilled shafts or where an MSE retaining wall is required.

For skewed bridges, consider the load path from thermal forces to the substructure. Skewed semi-integral abutments may rotate (finish condition).

See design example in the following publication of the American Iron and Steel Institute **HIGHWAY STRUCTURES DESIGN HANDBOOK, Vol. II Chapter 5,** "**Integral Abutments For Steel Bridges",** prepared for the National Steel Bridge Alliance by Tennessee DOT.

Bents on M.S.E. Walls - Refer to the ODOT *Retaining Structures Manual.* All MSE abutment walls and wing walls shall have a concrete facing.

1.1.8.5 Strutted Abutments

Abutments of single span bridges with the superstructure in place before backfilling may be designed using the strutting action to resist earth pressure overturning. For such abutments, apply soil pressure based on an at-rest or neutral condition of the soil. Footings for these abutments are not required to satisfy the "uniform bearing" under the dead load requirement. Investigate the bridge for the case of backfill being washed out behind one abutment. For this case, active soil pressures with no live load surcharge shall be used on the opposite abutment. A factor of safety against overturning of the whole structure of 1.25 will be considered adequate, and 125 percent of the allowable bearing pressure will be acceptable.

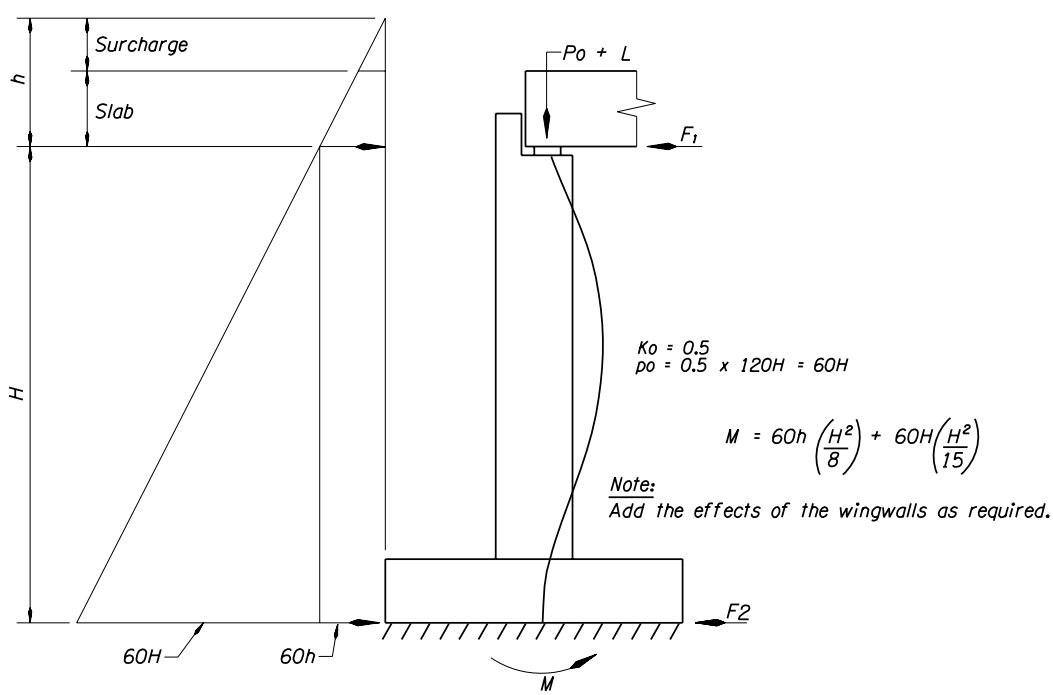

Figure 1.1.8.5A

1.1.8.6 Pile Cap Abutment Details

Pile Cap Elevations - Show the bottom of the pile cap elevations on the pile cap "Elevation" view. If the pile cap is sloped, show the elevation at each end.

Fixed (Integral) action – Double row of reinforcing bars provides the connection between superstructure and substructure. Shear and moment are transferred. Pile embedment to develop fixity is required, if the number and size of piles are selected to resist a specified load.

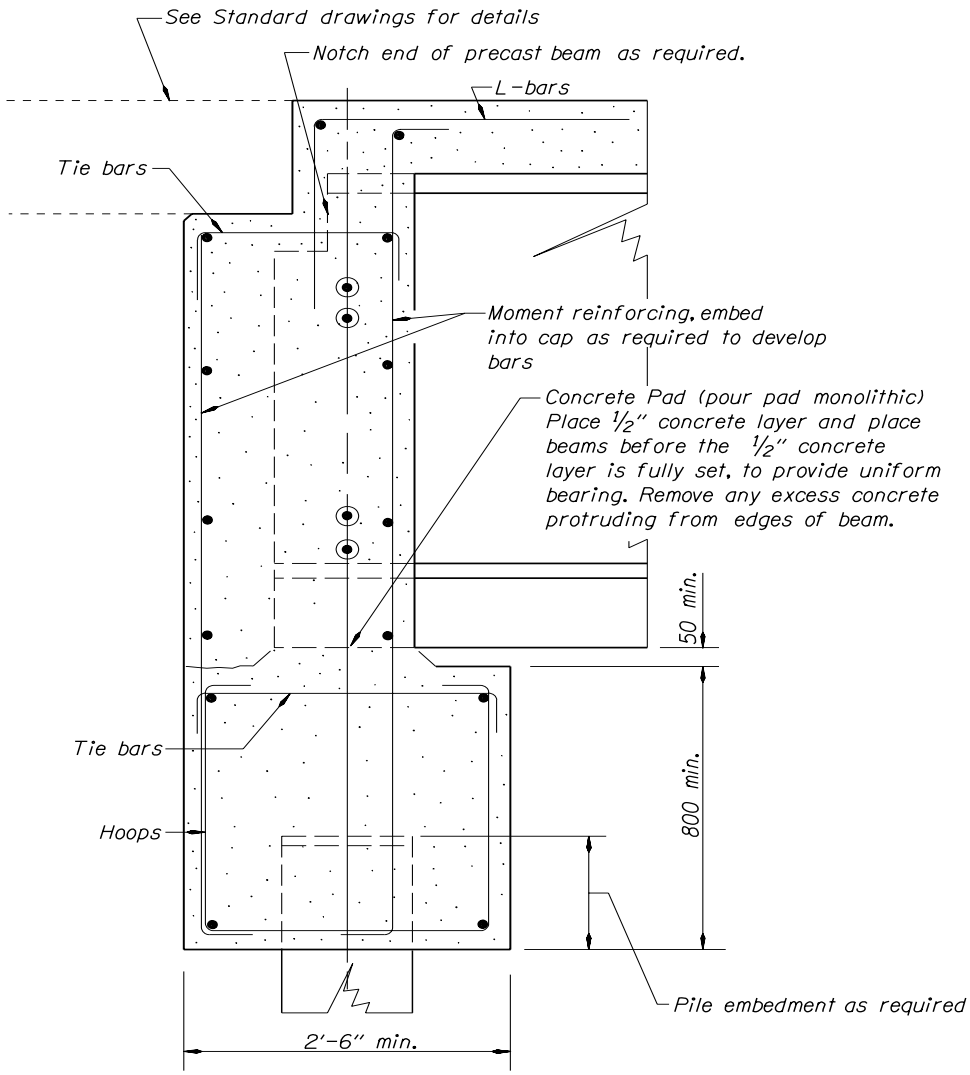

Figure 1.1.8.6A

1.1.8.6 Pile Cap Abutment Details - (continued)

Expansion allowed (nominal amount of movement) – No reinforcement is provided between the superstructure and substructure. This type is appropriate when nominal movement is expected on a non-yielding type of foundation.

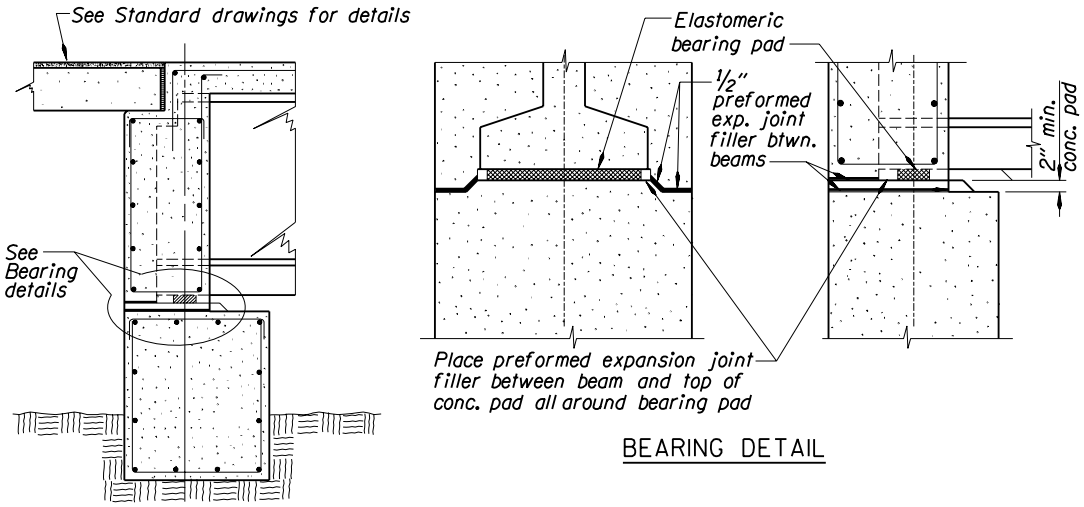

Figure 1.1.8.6B

Expansion allowed (movement allowed as required) - No reinforcement is provided between the superstructure and substructure. This type is appropriate when movement needs to be accommodated in the design. Various types of bearings and joints can be used for the movement required.

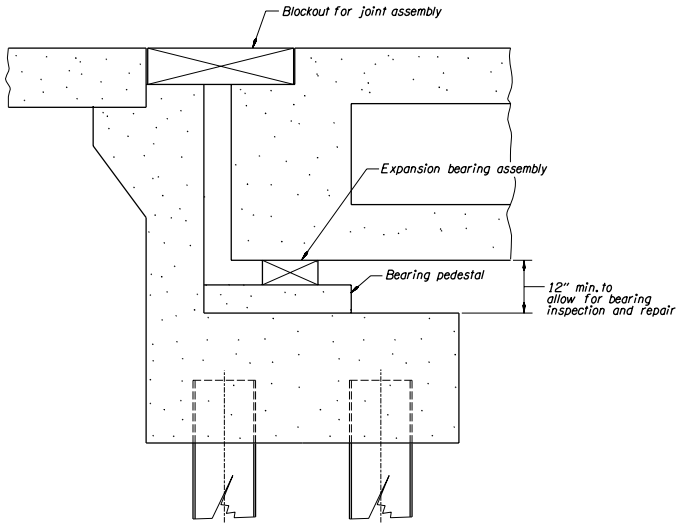

Figure 1.1.8.6C

1.1.8.7 Abutment Details for Prestressed Slabs

See Appendix Section A1.1.8.7 for Prestressed Slab End Bent Design/Detail Sheets for more details.

Shallow Abutments (Pile Cap) – Precast Slab or Box – most common and most economical type of end bent. It requires the least amount of excavation and cast-in-place concrete.

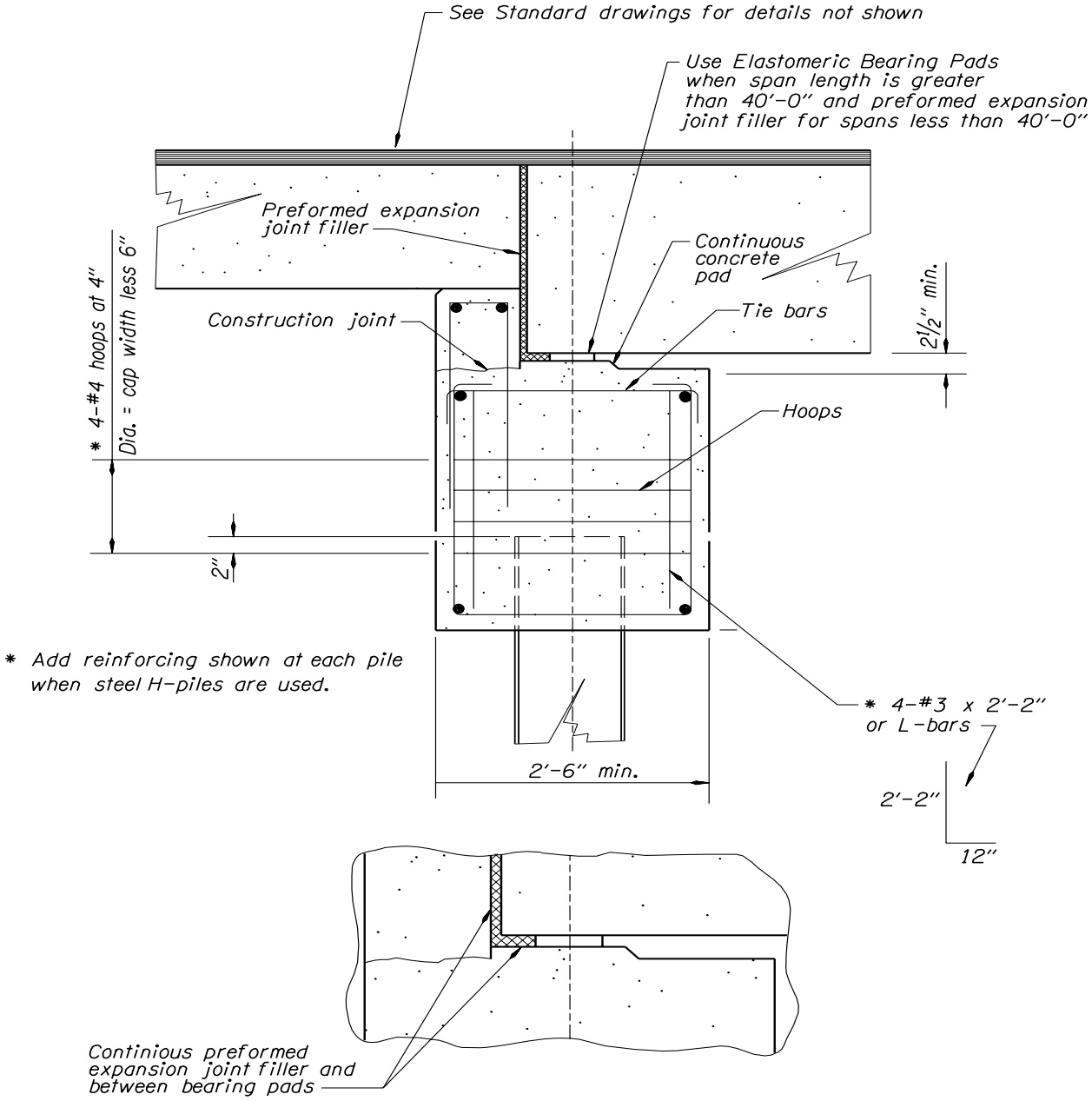

Figure 1.1.8.7A

1.1.8.7 Abutment Details for Prestressed Slabs - (continued)

Partial Depth Abutment – Precast Slab or Box -

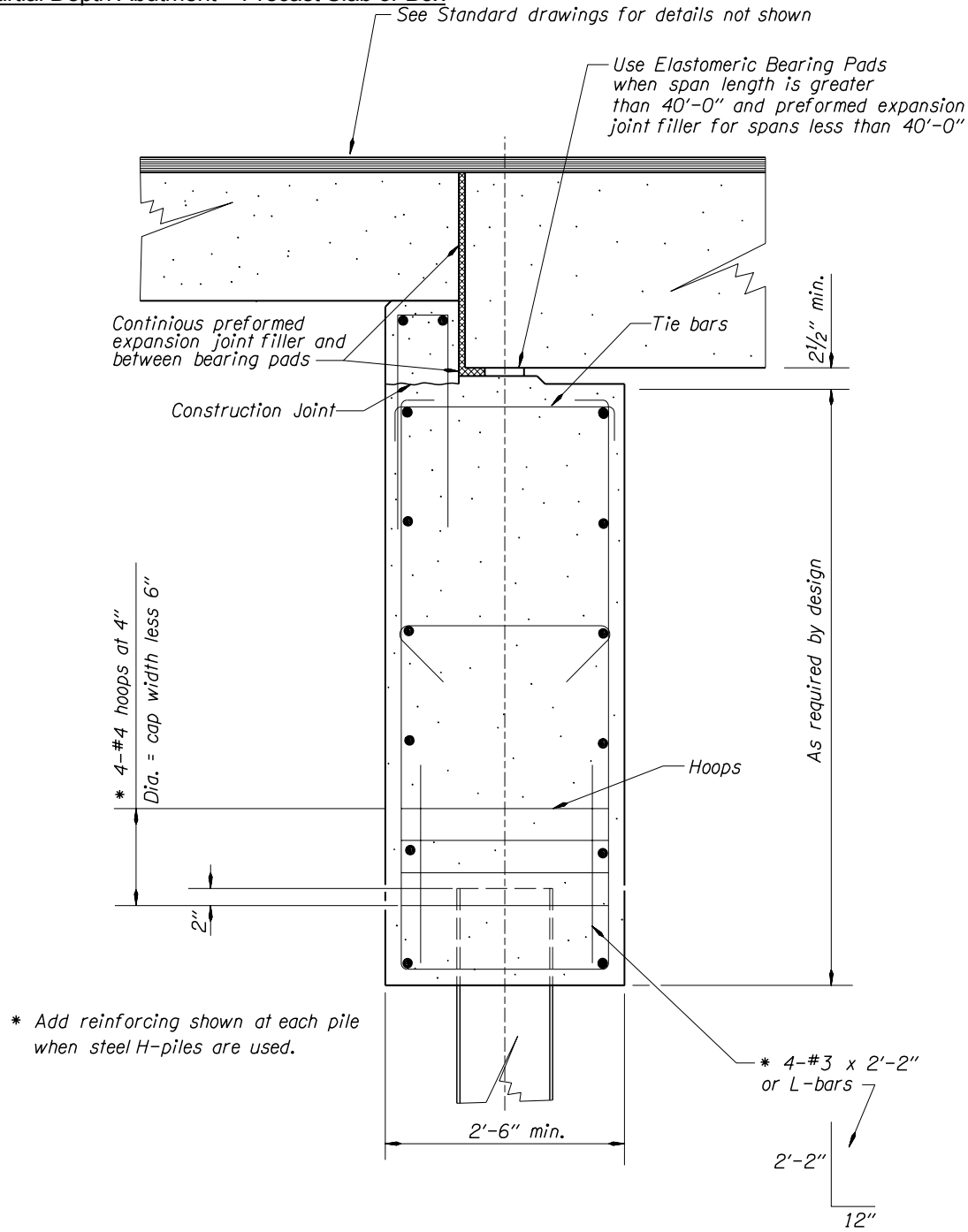

Figure 1.1.8.7B

1.1.8.8 Forming of Backwalls for End Beams

Details should be developed that will allow the removal of forming materials. Forming materials, including expanded polystyrene must be removed. Forming material is normally not yielding and can cause cracking as the structure expands and contracts.

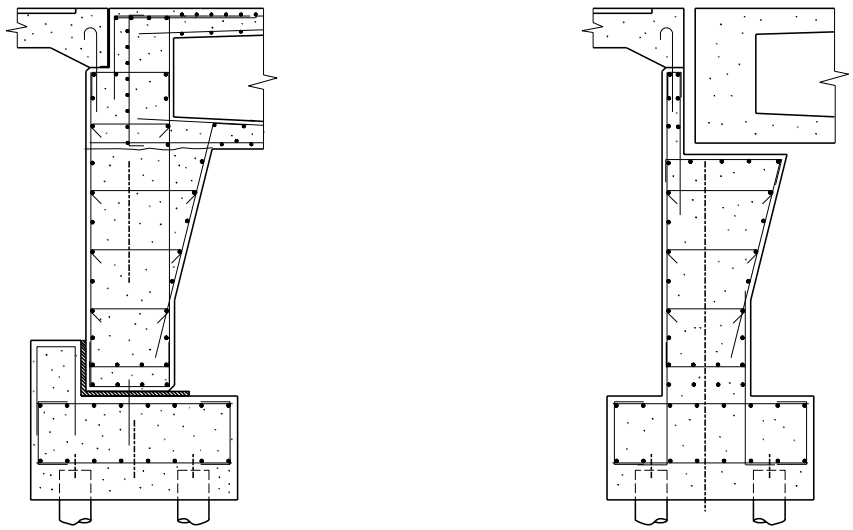

Figure 1.1.8.8A

1.1.8.9 Bent Joint Details

Provide an open joint between the abutment and the deck-and-girder section, as shown below. Note on the plans of post-tensioned structures that if expanded polystyrene is used to form the joint, it must be removed before tensioning.

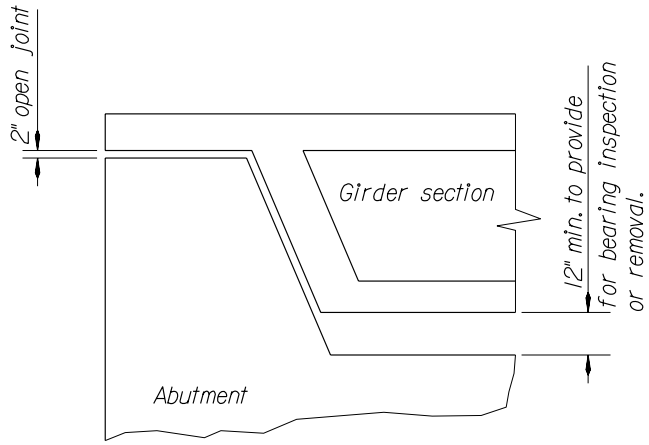

Figure 1.1.8.9A

BACK

1.1.8.10 Backwall Reinforcement for Post-tensioned Structures

When detailing the vertical reinforcement for the backwalls of abutments for post-tensioned spans, the Designer should take into account the location of the post-tensioning anchorages. Spacing of bars and/or splicing details should be such that the vertical bars do not have to be bent out of the way for the post-tensioning operation and bent back to their final positions.

1.1.8.11 Beam Seat Drainage

Slope the beam seats of abutments to drain away from the front face. Provide scuppers through the bearing pedestals and backwall or drain pipes at low points to pick up any water that might leak into this area.

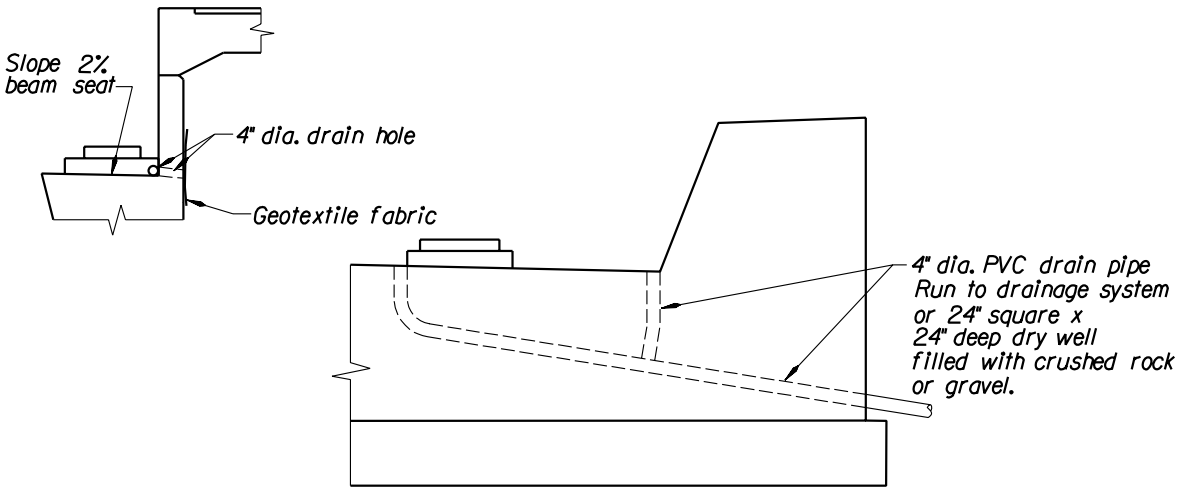

Figure 1.1.8.11A

1.1.8.12 Reinforced Concrete End Panels

See Section 1.1.2.7 for end panel requirement criteria. All bridges shall be detailed with paving ledges or other provisions so that present or future reinforced concrete end panels can be supported. Structures with sidewalks shall be detailed with a ledge or other provision to support an approaching concrete walk (present or future) if there is no approach slab in the walk area. When reinforced concrete end panels are required, show them on the bridge plans and include them in the bridge quantity estimate. In most cases, the bridge rail should be extended to the end of the end panel.

1.1.8.13 Bent Width Provisions with Precast Units

All pile caps, cross beams, abutments, etc. supporting adjacent precast units (such as slabs, boxes, integral bulb-T's, etc.) should be detailed for the total width of all units with an additional width of a minimum of 1/2" per precast unit. This is required because unit fit-up is not exactly true and "growth" in width occurs. The 6" minimum closure pour on each side of the exterior units at abutments as shown on End Bent Detail drawing may be used for adjustment due to these misfits. The 6" dimension may be increased where necessary for wider roadways.

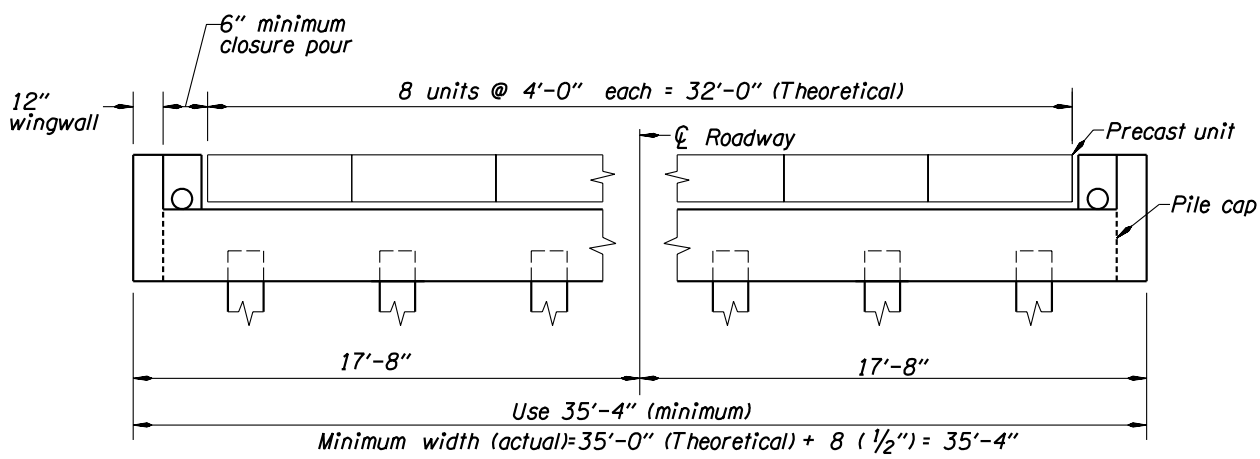

Figure 1.1.8.13A

1.1.9 Interior Bents

1.1.9.1 Interior Bents, Design and Detailing

Design - Design structure for stability under all stages of construction. The following conditions, in particular, should be checked:

1. Stream flow and wind load w/o superstructure.
2. Dead load of one or more girders plus wind load and stream flow. Note: Contractor is responsible for stability of girder itself.
3. Lateral system must be sufficient to insure stability of girders under wind load without deck.
4. Top flanges must have sufficient support not to buckle under dead load of (fluid) concrete without the aid of deck forms.

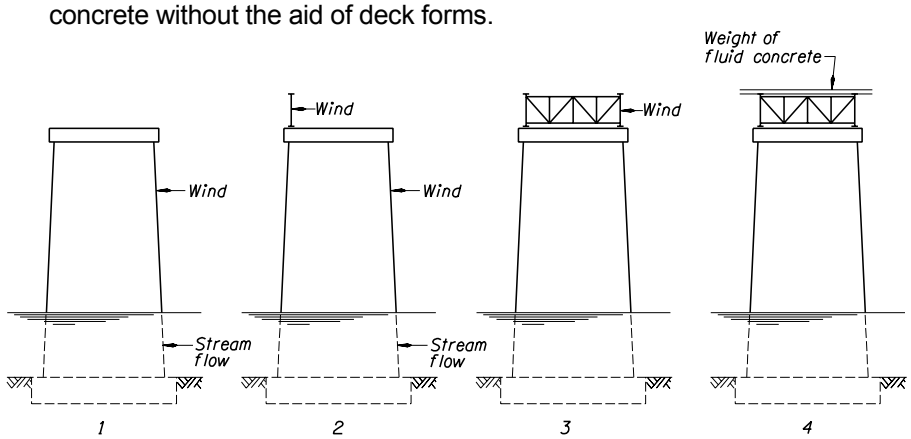

Figure 1.1.9.1A

Effective Span Length - When computing the maximum negative moment for a cross beam on a column, the cross beam may be considered to be supported by a concentrated reaction, the following distance inside the face of the column or pier:

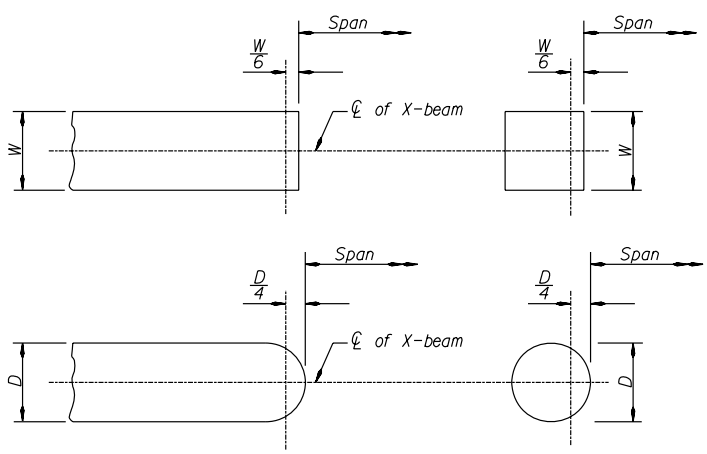

Figure 1.1.9.1B

1.1.9.1 Interior Bents, Design and Detailing - (continued)

Detailing – Provide all dimensions and details necessary for the reinforcing steel fabricator and contractor to construct it.

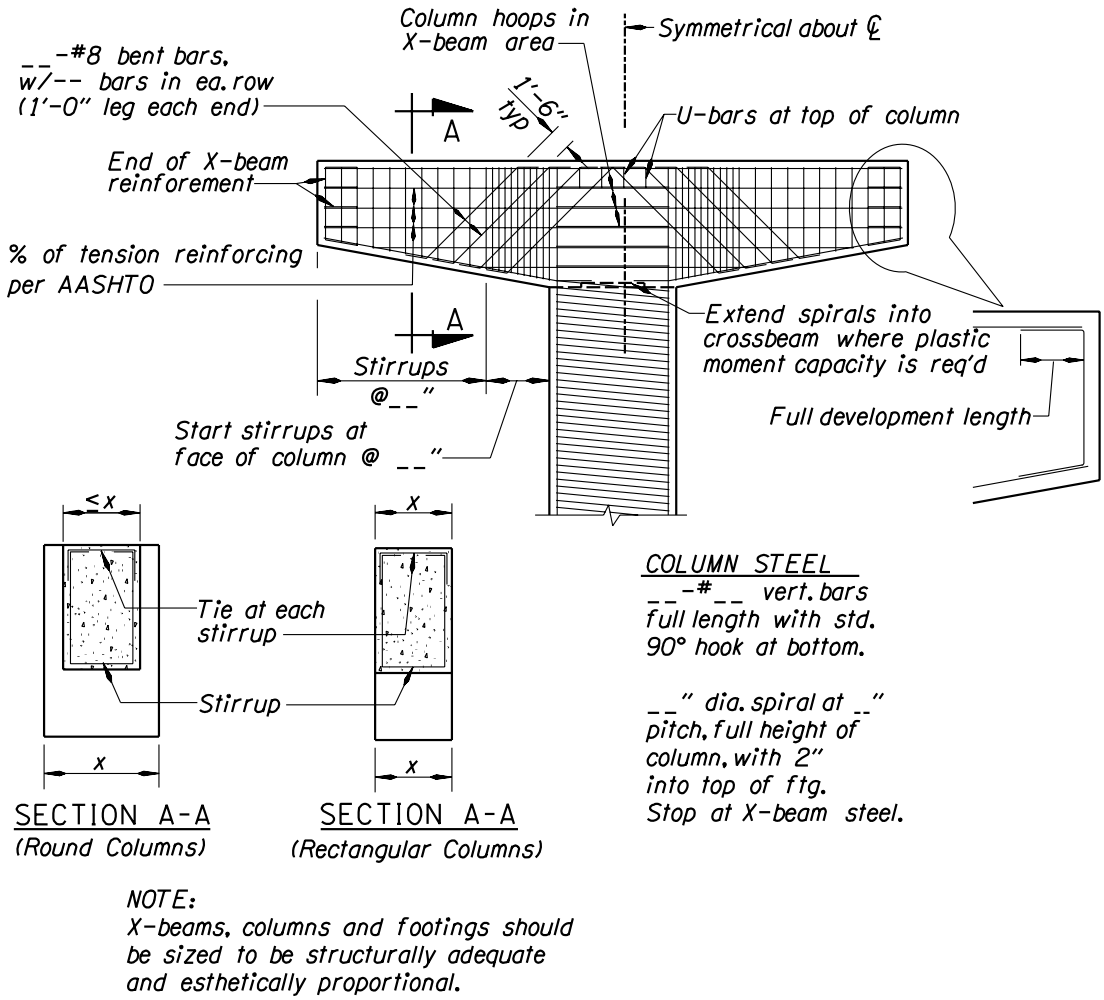

Figure 1.1.9.1C

See Section 1.1.9.5 and 1.1.9.6 for details of column reinforcing.

BACK

1.1.9.2 Interior Bent Details for Prestressed Slabs

- See Appendix Section A1.1.9.2 for Prestressed Slab Interior Bent Design/Detail Sheets.

1.1.9.3 Structure Widenings, Interior Bents

Generally, connections between structure bents should be detailed to tie the structures together, but prevent dead load and concrete shrinkage loads from being transferred to existing bents.

Example details are shown below and on the following pages.

The method below allows the new x-beam to deflect during the construction loadings with minor load transfer to the existing x-beam.

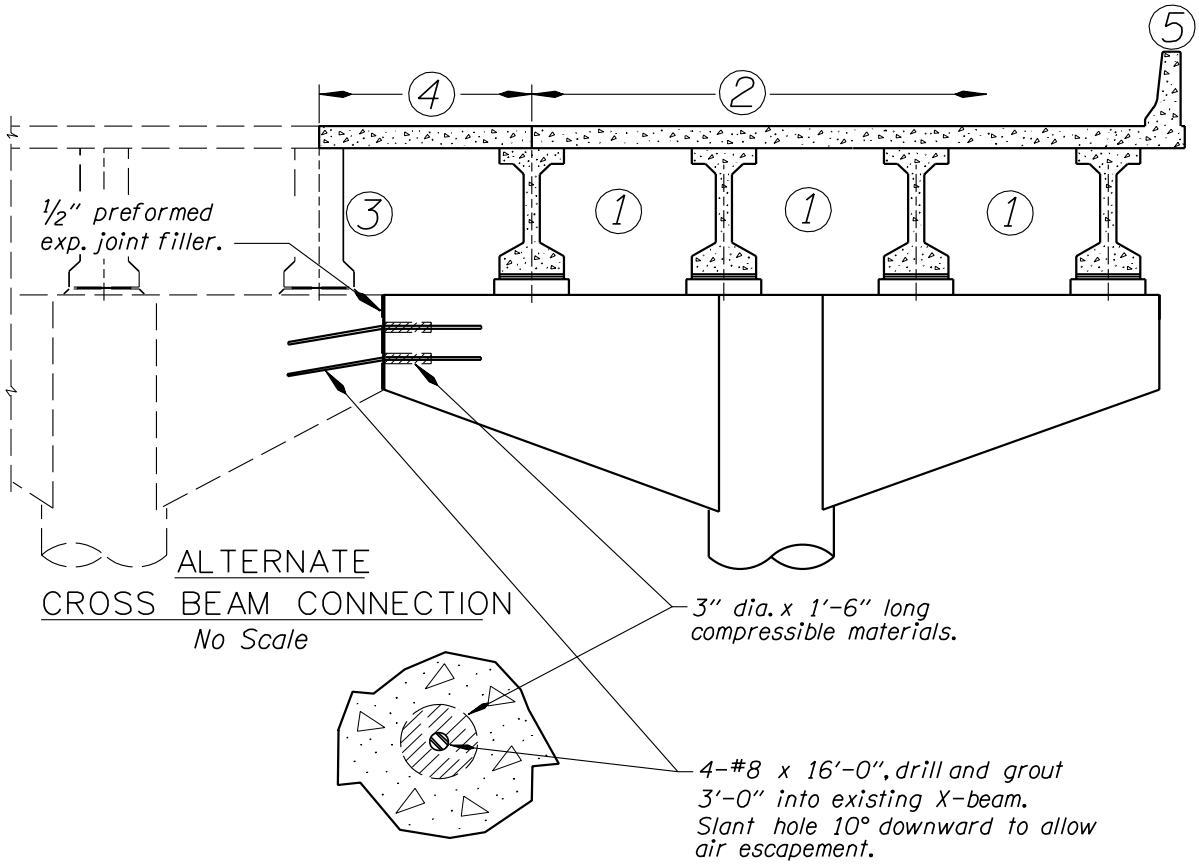

POUR SCHEDULE
(INCLUDING CLOSURE POUR)

1. Make pour in end beams and diaphragms
2. Make pour in deck slab. Delay pour 2 a min. of 3 days after pour 1. A transverse deck construction joint may be made at any diaphragm beam. Delay pouring adjacent deck sections a minimum of 36 hours.
3. Make pour in end beams and diaphragm of closure pour section.
4. Make pour in deck slab of closure pour. Delay a minimum of 3 days after pour 3.
5. Make pour in bridge rail.

Fig. 1.1.9.3A

1.1.9.3 Structure Widenings, Interior Bents - (continued)

The method below allows the widening construction to be completed before the connecting bars are grouted and able to transfer loading from the new x-beam to the existing x-beam.

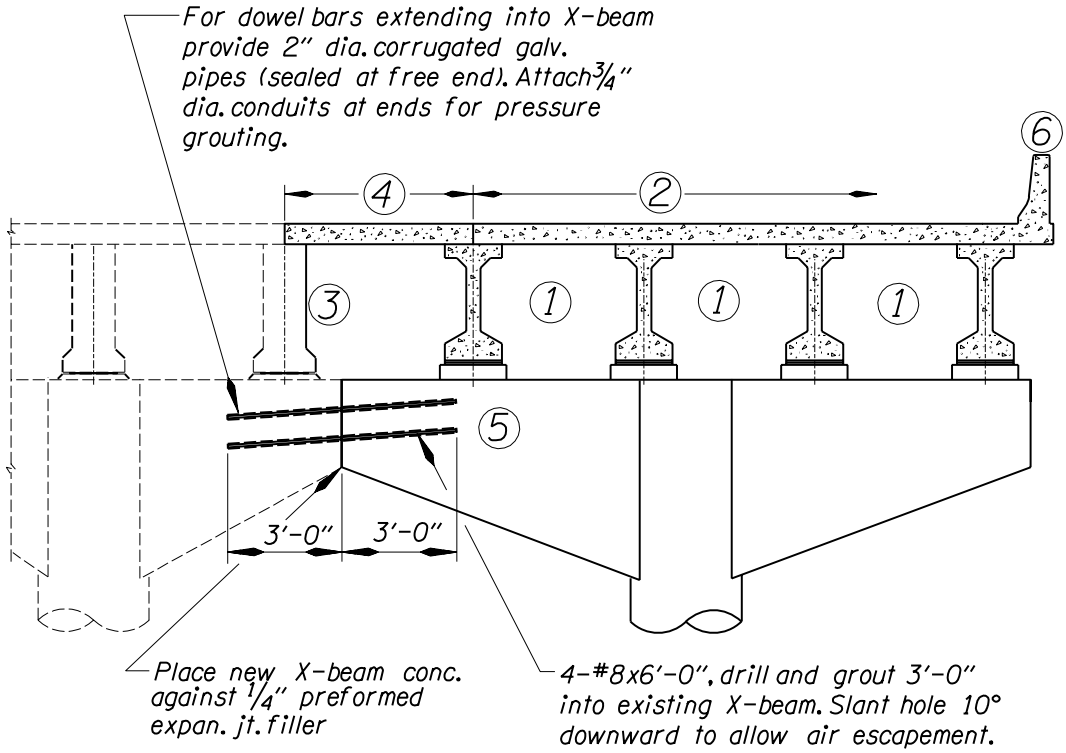

CROSS BEAM CONNECTION AND CLOSURE POUR DETAIL

No Scale

POUR SCHEDULE
(INCLUDING CLOSURE POUR)

1. Make pour in end beams and diaphragms
2. Make pour in deck slab. Delay pour 2 a min. of 3 days after pour 1. A transverse deck construction joint may be made at any diaphram beam. Delay pouring adjacent deck sections a minimum of 36 hours.
3. Make pour in end beams and diaphragm of closure pour section.
4. Make pour in deck slab of closure pour. Delay a minimum of 3 days after pour 3.
5. Pressure grout dowels in cross beam.
6. Make pour in bridge rail.

Figure 1.1.9.3B

BACK

1.1.9.4 Columns in Slopes

Special attention should be given to situations where new fill could exert lateral pressure against bents other than the end bents. Such situations may require special construction sequence notes and/or special footing design including battered piling.

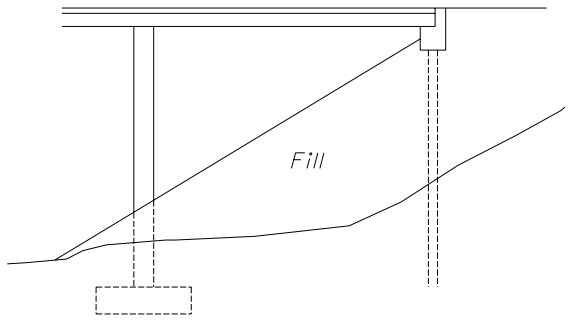

Figure 1.1.9.4A

1.1.9.5 Column Design, General

See Section 1.6 for column loading criteria for vehicular impact, depending on type and location of barrier used (ODOT Instructions for AASHTO LRFD 3.6.5).

Due to lateral tie requirements in the new LRFD Specifications (AASHTO LRFD Bridge Design Specifications), tied columns are essentially not constructible. There is no way to provide enough space for man access for tying or inspection. The multiple interlocking spiral is the only choice for non-circular columns. Use 0.75 spiral diameters as the maximum center-to-center spacing of spirals. In this way, the smaller column dimension will dictate the larger column dimension. Closer center-to-center spacing of spirals is possible but would reduce the access space for tying and inspection. At least 4 vertical bars must be placed within the spiral overlap area. A photo log from FHWA is available showing how multiple spirals have been constructed.

Corners will normally be filleted or rounded. Using rectangular corners will require nominal corner vertical bars with ties developed within the core area, and these ties would normally interfere with bar tying and inspection. These corners will be considered "expendable" in an earthquake, therefore the rebar should not be developed in the core.

Bundled bars should only be oriented tangentially (both bars touching the spiral). Multiple concentric rings of bars are not a constructible option with multiple interlocking spirals, but may be used in detailing of circular columns.

Apply LRFD equations (5.7.4.6-1, 5.10.11.4.1d-1, 5.10.11.4.1d-2 and 5.10.11.4.1d-3) using volumes for a single spiral, using a theoretical minimum-cover column with 2” of cover to determine gross area in these equations. The maximum spiral yield strength to be used in determining spiral spacing is 60 ksi. The heavier spiral confinement requirements for plastic hinge areas do not apply to tops of columns that are pinned.

Specify 3/4” maximum aggregate size in footings, columns and crossbeams. This will allow use of the AASHTO vertical bar spacing requirement which means 3½” center-to-center for #11 bars. To maintain the shape of the spirals, use a maximum vertical bar spacing of 8”.

BACK

1.1.9.5 Column Design, General - (continued)

Containing an 8” dia. drain pipe within the column and taking it out between spread bars at the bottom is not an option since confinement requirements would be violated. Maximum clear spacing for spirals is 3” (or a pitch of 3½ ”).

1.1.9.6 Spiral Reinforcing

Use spiral reinforcing for all columns. For column designs not controlled by seismic loading, spirals shall extend from a minimum 2” below the top of the footing to the bottom of the steel in the cross beam or longitudinal beam.

Where plastic moment capacity is required between column-to-crossbeam connections, extend the spirals into the crossbeam to the top crossbeam steel.

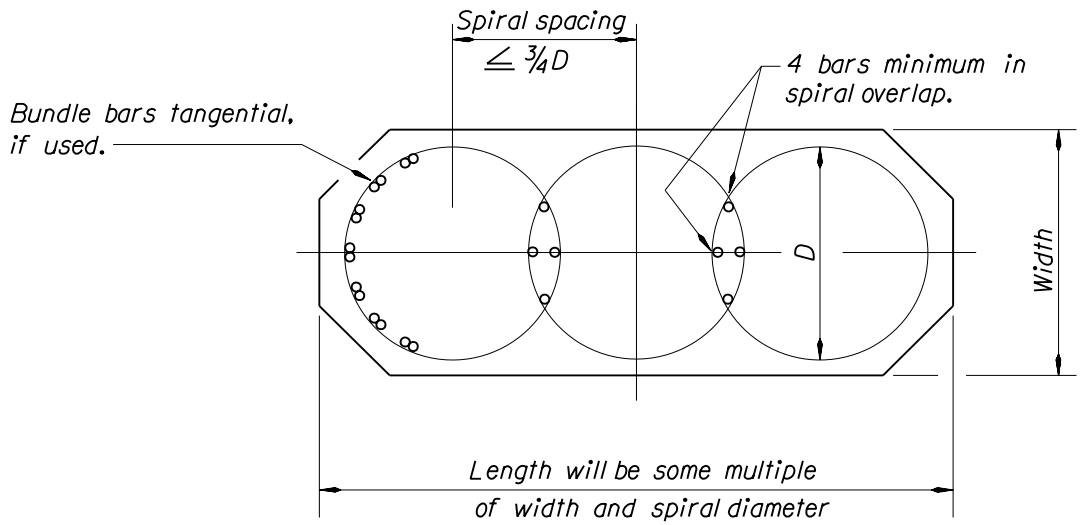

Figure 1.1.9.6A

1.1.9.6 Spiral Reinforcing - (continued)

The following notes apply to the specification above and are for designer information only:

- Deformed bars (ASTM A615 Grade 60, or ASTM A706) can be specified in sizes from #3 through #6.
- A496 is included in the list. It is difficult to obtain now but, with the increased use of spiral columns, it may possibly become more available in the future.
- A706 is formulated to be weldable so submission of chemical analysis is unnecessary. It is also preferred because it is the most ductile.
- A82 cannot be mechanically spliced because it lacks deformations. It is available only in sizes 5/8" dia. or less.
- ASTM A82 and A615 Grade 60 bars are available in coils. Average A82 bar coils have a weight of approximately 1500 lb, and A615 deformed bar coils have a weight of 3000 lb to 4500 lb, depending on the size of the bar.
- For ease of handling, spirals are generally fabricated without splicing in weights up to a maximum of 200 lb per piece for diameters 8' and under.
- Coated spiral bars are fabricated using ASTM A706 bars. Stock lengths are generally 40' to 60'. Bars are spliced using the weld lap splice method. Maximum shipping mass is 200 lb for ease of handling and protection of the coating.
- Approved mechanical fasteners may be used provided the full strength of the bar is developed.
- Use of lapped splices should be avoided because of the 80d lap requirement and because hooks into the core will inhibit access for tying and inspection. Use of lapped splices is not permitted for spirals less than 3'-4" diameter.
- The plans should state the type of spiral reinforcement used in computing reinforcing quantities. Normally the Designer should assume A706 with welded splices.

BACK

1.1.9.6 Spiral Reinforcing - (continued)

Standard spiral splice and termination details are shown below.

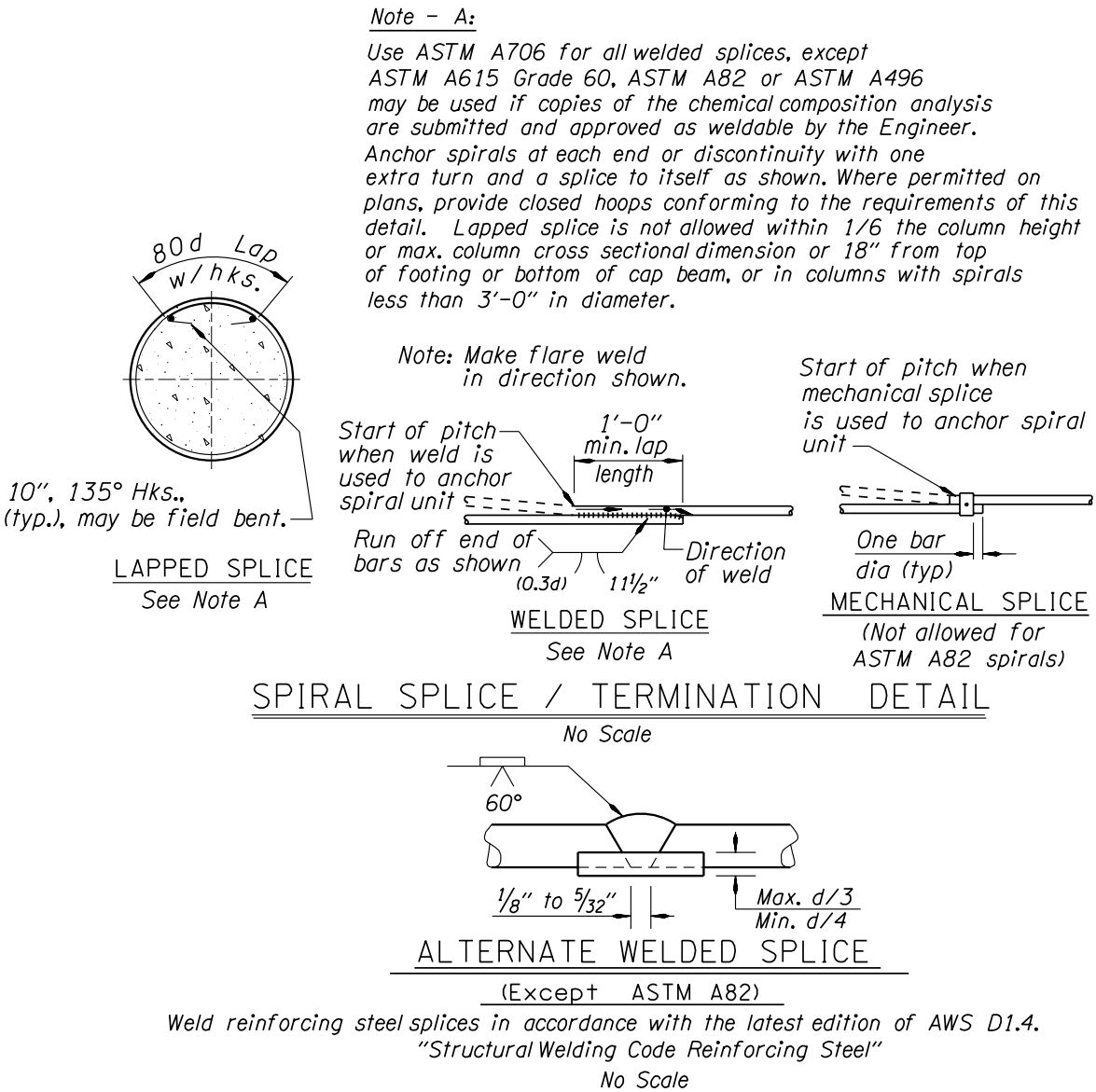

Figure 1.1.9.6B

BACK

1.1.9.7 Column Steel Clearance in Footings

Column steel hooks are placed on top of the footing mat to avoid the need for threading footing steel through the column steel cage.

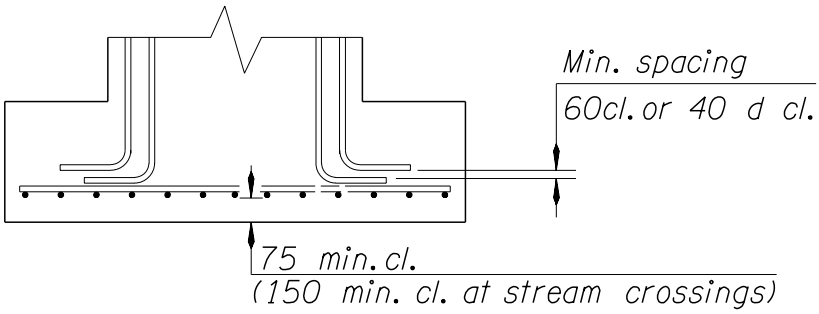

Figure 1.1.9.7A

1.1.9.8 Column Hoops

Due to seismic requirements, use hoops and ties only to supplement spiral reinforcement for architecturally shaped columns to provide some confinement to concrete that is "expendable" in a major seismic event. Terminate these supplemental hoops and ties without the normal extension (hooks) into the interior mass of the column concrete. Because these architectural features are expendable and are not considered in the analysis and design we want to allow their failure. They should be detailed so they do not add undesired stiffness and strength.

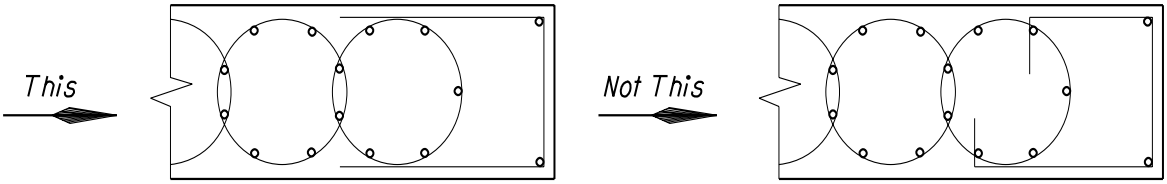

Figure 1.1.9.8A

1.1.9.9 Vertical Bar Splices

Do not splice vertical column bars for columns less than 30 feet in length (no footing dowels). For longer columns, splices may be made as shown below in the middle 1/2 (preferably at mid-height) of the column (outside the plastic moment areas).

The development requirements may require 180 degree hooks of the column verticals in the cap beam. Pay attention to how the column verticals, extended spirals, bottom cap beam bars, and post-tensioning ducts all fit together.

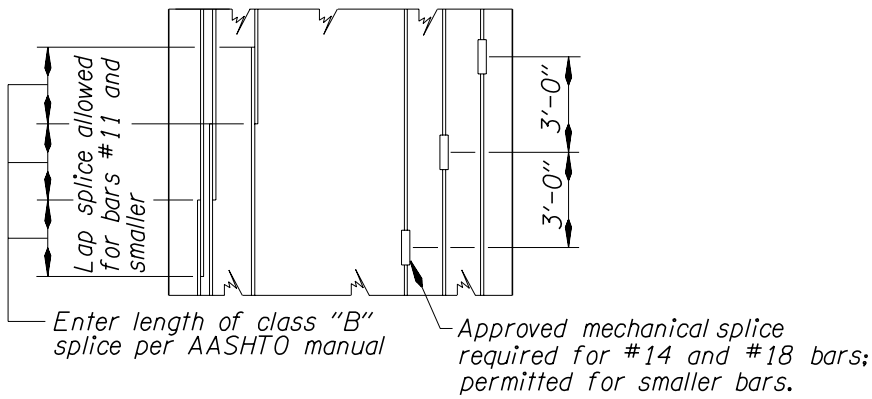

Figure 1.1.9.9A

1.1.9.10 Optional Hoop Detail at Bottom of Column

The detail below will facilitate more effective concrete placement in the core area of the footing. The 6" gap is used to facilitate placement of the top mat of reinforcement.

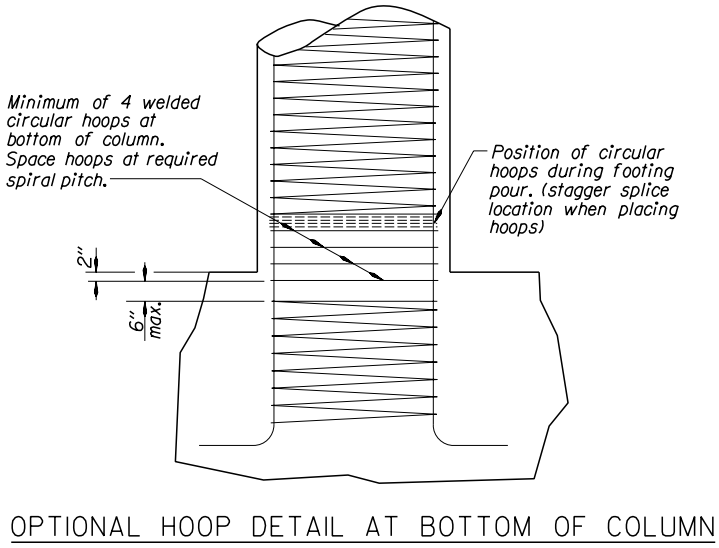

Figure 1.1.9.10A

BACK

1.1.9.11 Footing Reinforcing

Provide a mat of reinforcing steel (minimum of #5 bars at 12" centers each way) in the top of all footings. If calculated loads require larger amounts of reinforcement, the latter controls. Also provide U-bars at 12" centers around the periphery of the footing.

Extend spirals at least two inches into the footing. Place the footing top mat immediately below the spiral termination. Place additional spirals below the mat (use a 6" spiral gap) down to the vertical bar's point of tangency. Use the same spiral pitch at all locations.

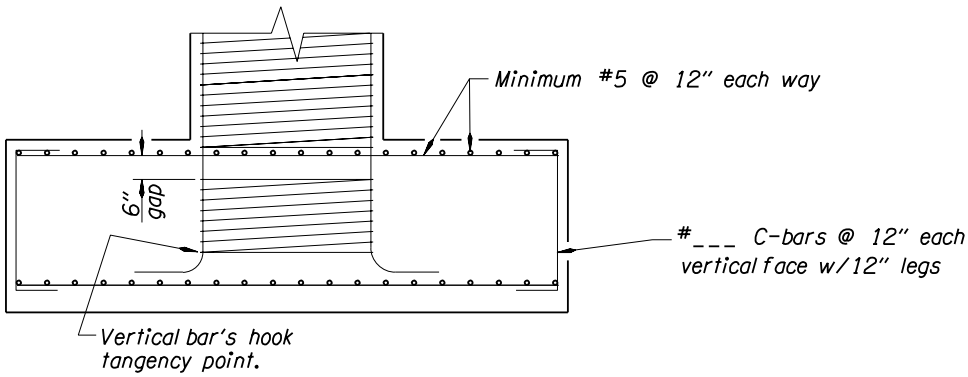

Figure 1.1.9.11A

1.1.9.12 Sloped Footings

General criteria for sloped footing tops are:

- The required footing thickness adjacent to the column should be at least 4'-6". (No minimum edge thickness is specified except as required for shear.)
- The amount of concrete saved should be at least 10 yd^3.
- The top may be sloped either two ways or four ways, but should not be steeper than 2:1.
- A horizontal area should be provided 6" to 12" wide outside the base of the column to facilitate forming the column.

BACK

1.1.10 Seismic Design

1.1.10.1 Seismic Design, General

Realize the uncertainty of the seismic event, its magnitude, and its effect on the bridge site and the bridge. Realize also that almost always structures perform better than we think they will - the notable exception being loss of support through pull-off. We can enhance structure performance more by attention to details than through refined design.

The Seismic Design Standards and Practice Engineer (Seismic TE-3) should be freely consulted when questions arise. Decisions made which involve exceptions to standard design practices due to seismic requirements will be documented by the Seismic TE-3 for later reference. Deviations from the following guidelines should be justified and documented. The documentation should be in the permanent bridge records with a copy given to the Seismic TE-3.

Seismic load effects should be considered for all projects using the following general guidelines:

New Bridges: Design all bridge components for full seismic loading according to the current edition of AASHTO LRFD Bridge Design Specifications, except as modified by Design Manual Sections 1.1.9.5 to 1.1.9.11, 1.1.10 and 1.1.11. AASHTO LRFD Section 3.4.1 for Extreme Event Load Combination I, $\gamma EQ = 0$. unless the bridge is designated by Bridge Section as a major, unusual or unique structure. Seismic ground motion values should be based on the 2002 USGS Seismic Hazard Maps. ODOT versions of these maps are included in Figures 1.1.10.1A to 1.1.10.1I. The 2002 USGS Seismic Hazard Maps and other ground motion data may be obtained from the USGS web site at the following web address: http://eqhazmaps.usgs.gov/ . The latitude and longitude of the site is needed to obtain the most precise data.

(1) 1000-year "No Collapse" Criteria: Design all bridges for a 1000-year return period under a "no collapse" criteria. To satisfy the "no collapse" criteria, use Response Modification Factors from Table 3.10.7.1-1 of the AASHTO LRFD Bridge Design Specifications using an importance category of **"other"**. Contrary to 3.10.2 in the AASHTO LRFD Bridge Design Specifications, use the bedrock acceleration coefficient from the ODOT 1000-year PGA map (see Figure 1.1.10.1D). When requested in writing by a local agency, the bedrock acceleration coefficient for local agency bridges may be taken from the ODOT 500-year PGA map (see Figure 1.1.10.1A).

(2) 500-year "Serviceable" Criteria: In addition to the 1000-year "no collapse" criteria, design all bridges to remain "serviceable" after a 500-year return period event. To satisfy the "serviceable" criteria, use Response Modification Factors from Table 3.10.7.1-1 of the AASHTO LRFD Bridge Design Specifications using an importance category of **"essential"**. Contrary to 3.10.2 in the AASHTO LRFD Bridge Design Specifications, use the bedrock acceleration coefficient from the ODOT 500-year PGA map (see Figure 1.1.10.1A). When requested in writing by a local agency, the "serviceable" criteria for local bridges may be waived.

(3) Long Span Bridges: 3.10.1 in the AASHTO LRFD Bridge Design Specifications states that the seismic provisions are applicable for spans not exceeding 500 ft. When the peak rock acceleration is less than 0.19g, the AASHTO LRFD Bridge Design Specifications may be used even if the maximum span length exceeds 500 ft. For long spans in higher seismic areas, consult with the Seismic Design Standards & Practice Engineer to discuss whether special analysis and design procedures are warranted.

BACK

1.1.10.1 Seismic Design, General - (continued)

Bridge Widenings: Design select bridge portions for seismic loading as directed by the flowchart shown in Figure 1.1.10.1J. Design by the same criteria as for "New Bridges".

Seismic Retrofit: There is currently no funding within ODOT solely to upgrade the seismic load resistance of select structures. However, when the seismic retrofit design is included in a project, the design shall use a phased approach.

Phase 1 - Work during this phase is intended to prevent superstructure pull-off and bearing failure. This is the nature of almost of our retrofit program at this time. The publication "Seismic Retrofitting Manual for Highway Bridges" (FHWA-RD-94-052) is recommended as a reference source to supplement our Bridge Design and Drafting Manual.

Phase 2 - Work during this phase involves substructure (columns and footings) ductility enhancement and strengthening. Any additional or deferred Phase 1 work would also be included. The end product is a retrofitted bridge with as much seismic loading resistance as a new bridge would have for the site. Bridges retrofitted to this performance level will be uncommon.

Seismic Retrofit shall be included when the 1000-year return period PGA is greater than or equal to 0.19g. As a minimum, include at least phase 1 retrofit. Assure that the girders will not pull off longitudinally or slide off laterally from the bents. This will normally involve addition of cable restraints, shear blocks, and beam seat lengthening and widening.

The Designer must identify a seismic design concept which will accomplish the intent to preclude span pull off or collapse of the superstructure. Depending on the concept selected, some strengthening of the superstructure may be required to assure loads generated at the restraints or shear blocks can be transmitted without exceeding design stresses in the superstructure. Short pedestals or secondary columns above the main bent cap level must also be investigated for seismic induced loading and strengthened or braced, if necessary.

Bearings are upgraded to elastomeric bearings, if needed to assure the designer's concept will work. Upgrading the bearings to elastomeric should also, be considered to improve seismic performance when the existing bearings are known to have poor seismic performance, such as steel rocker bearings. Analysis for Phase 1 will normally consist of a single degree of freedom model, which may be sufficient for normal bridges. However, a higher level analysis may be required, if needed to fully develop the designer's concept, or for bridges with irregular column lengths of multi-column bents or if the bents have significantly different stiffness. Full column sections (uncracked) are used for this level of analysis to develop connection design loads. This is the minimum level of work that must be included. The designer may use cracked section analysis to investigate the maximum anticipated movements.

BACK

1.1.10.1 Seismic Design, General - (continued)

The structure should also be evaluated to investigate the level of effort and scope of work needed to do phase 2 retrofit. Phase 2 involves a complete seismic analysis of the widened or rehabilitated bridge for full seismic loading, including consideration of strengthening or restraints to the superstructure, substructure and foundations. The work may involve column and footing strengthening or enlargement, or the use of isolation bearings, and soil improvement, if there is potential for liquefaction. The decision about whether to actually do the phase 2 work in the project will be made after developing a retrofit concept, rough cost estimate and evaluation of the relative importance of the bridge to the transportation network, in comparison to the estimated cost and available funding for the project. The flowchart for seismic design of widenings in section 1.1.10.1 (Figure 1.1.10.1J) of the BDDM can be used as a guide to make the decision. On major, unusual or border bridges, the decision should involve discussion with Bridge Section, since seismic retrofit criteria for these structures are specific to the site.

Rail Upgrade, Deck Overlays, Preservations, Repair, Strengthening, and Others - These projects should include seismic retrofit as described previously for "Seismic Retrofit".

BACK

1.1.10.1 Seismic Design, General - (continued)

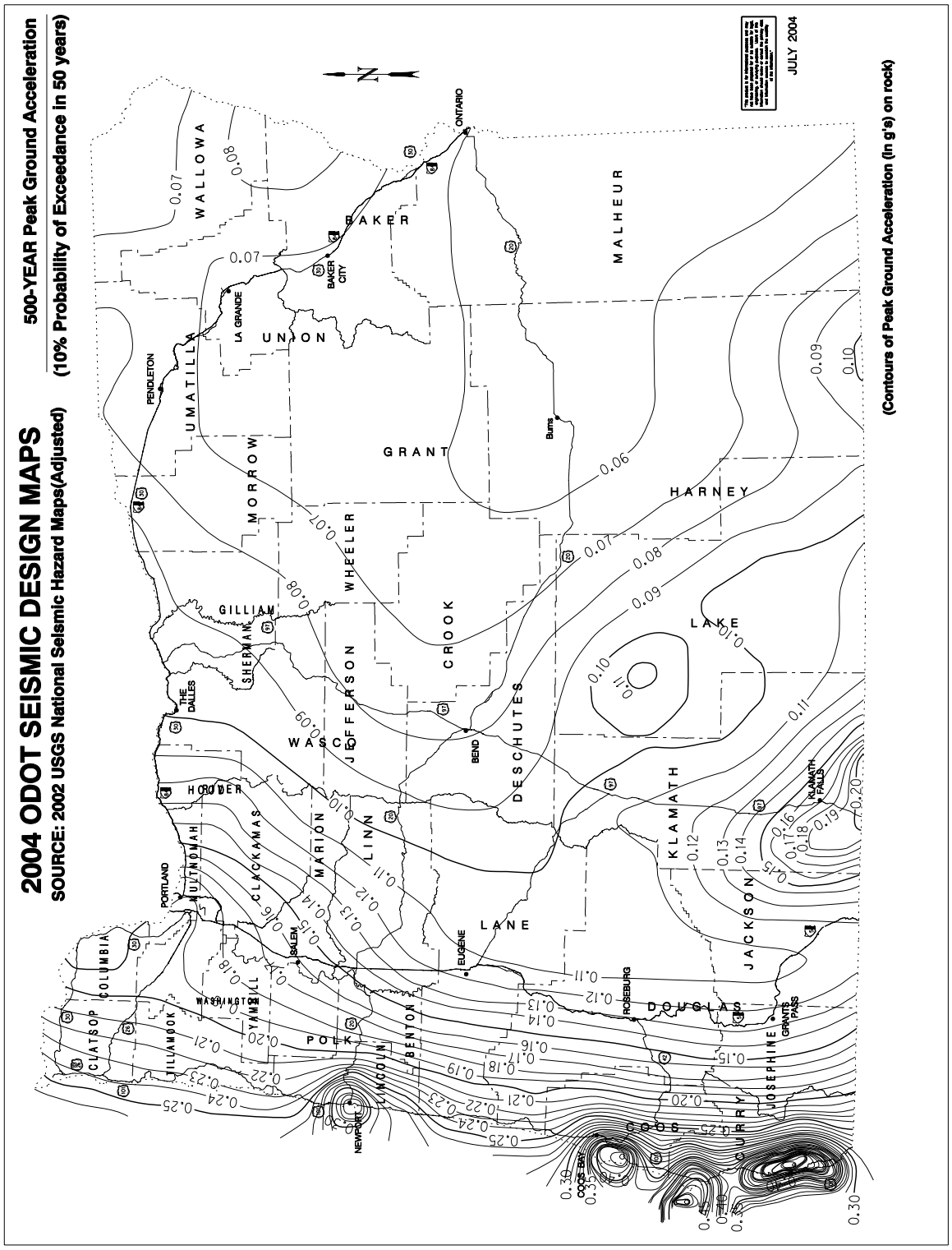

Figure 1.1.10.1A

BACK

1.1.10 Seismic Design, General - (continued)

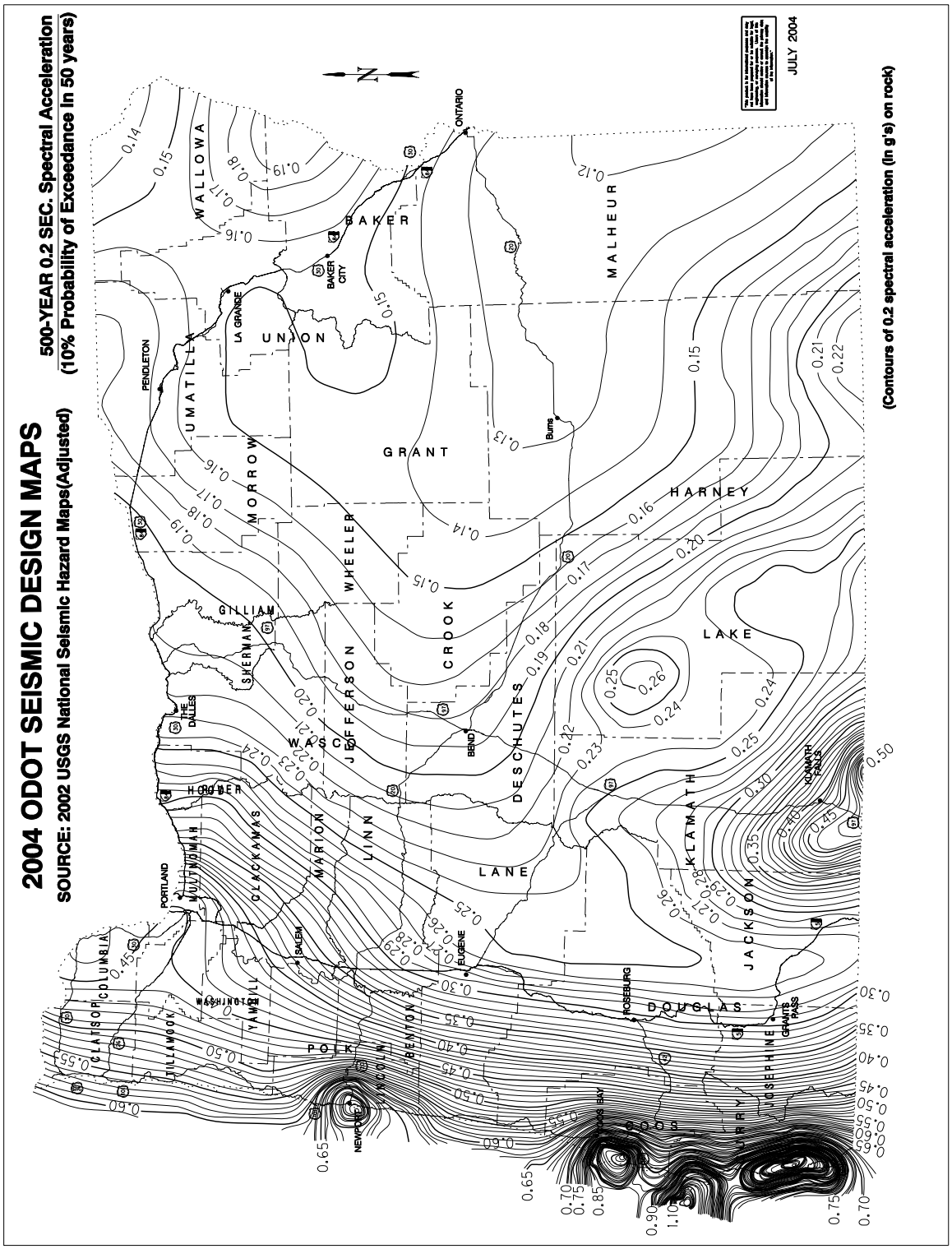

Figure 1.1.10.1B

1.1.10.1 Seismic Design, General - (continued)

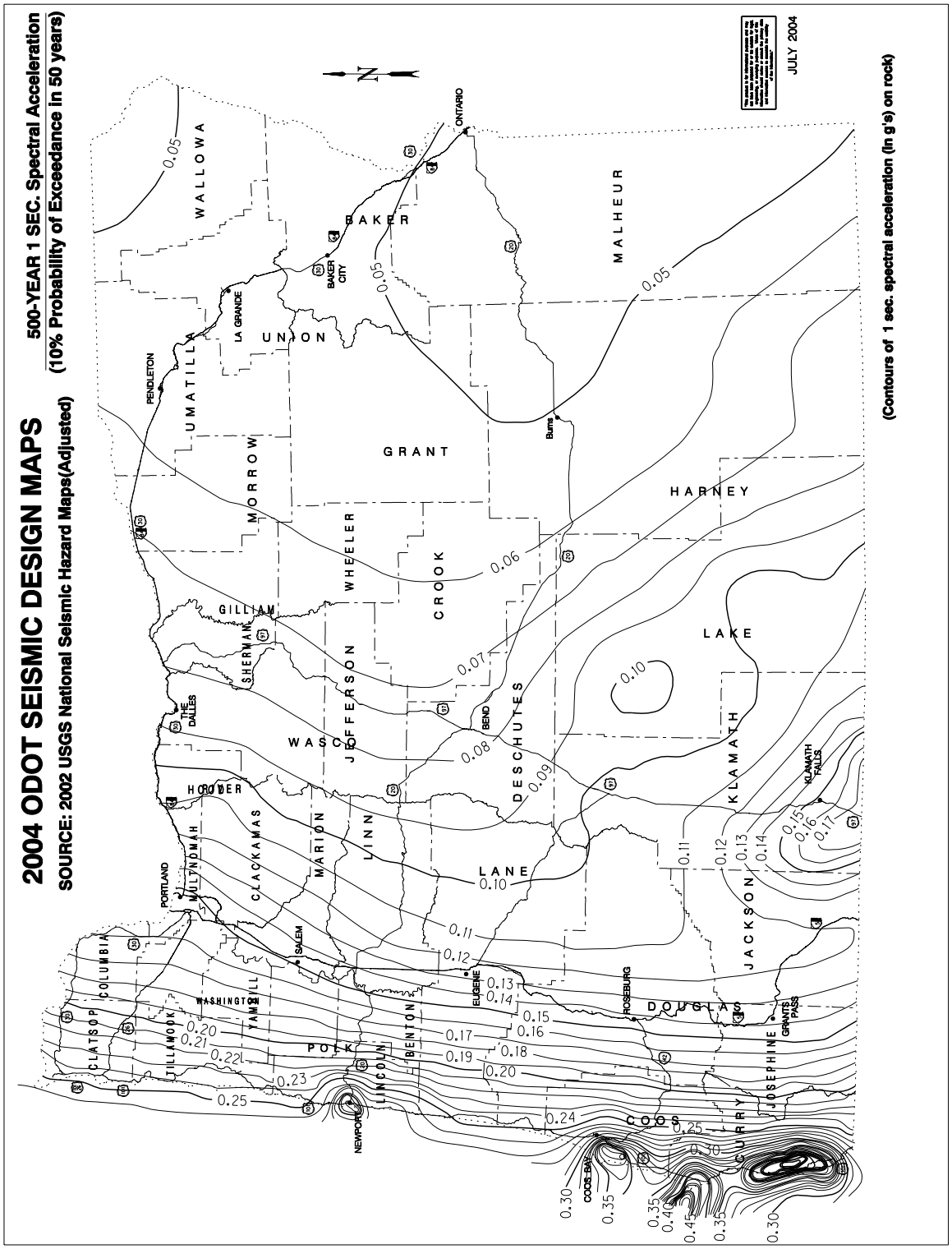

Figure 1.1.10.1C

1.1.10.1 Seismic Design, General - (continued)

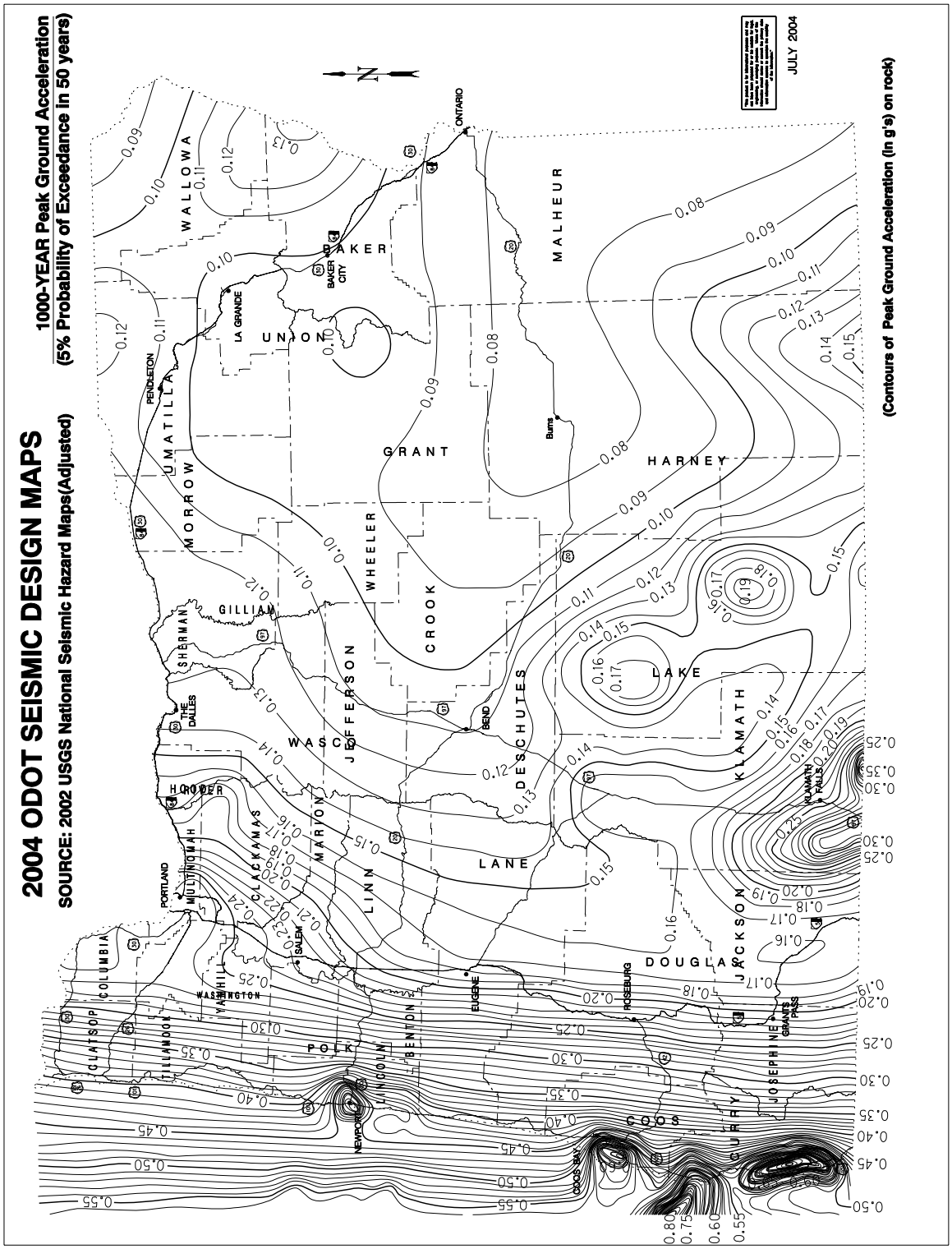

Figure 1.1.10.1.D

1.1.10.1 Seismic Design, General - (continued)

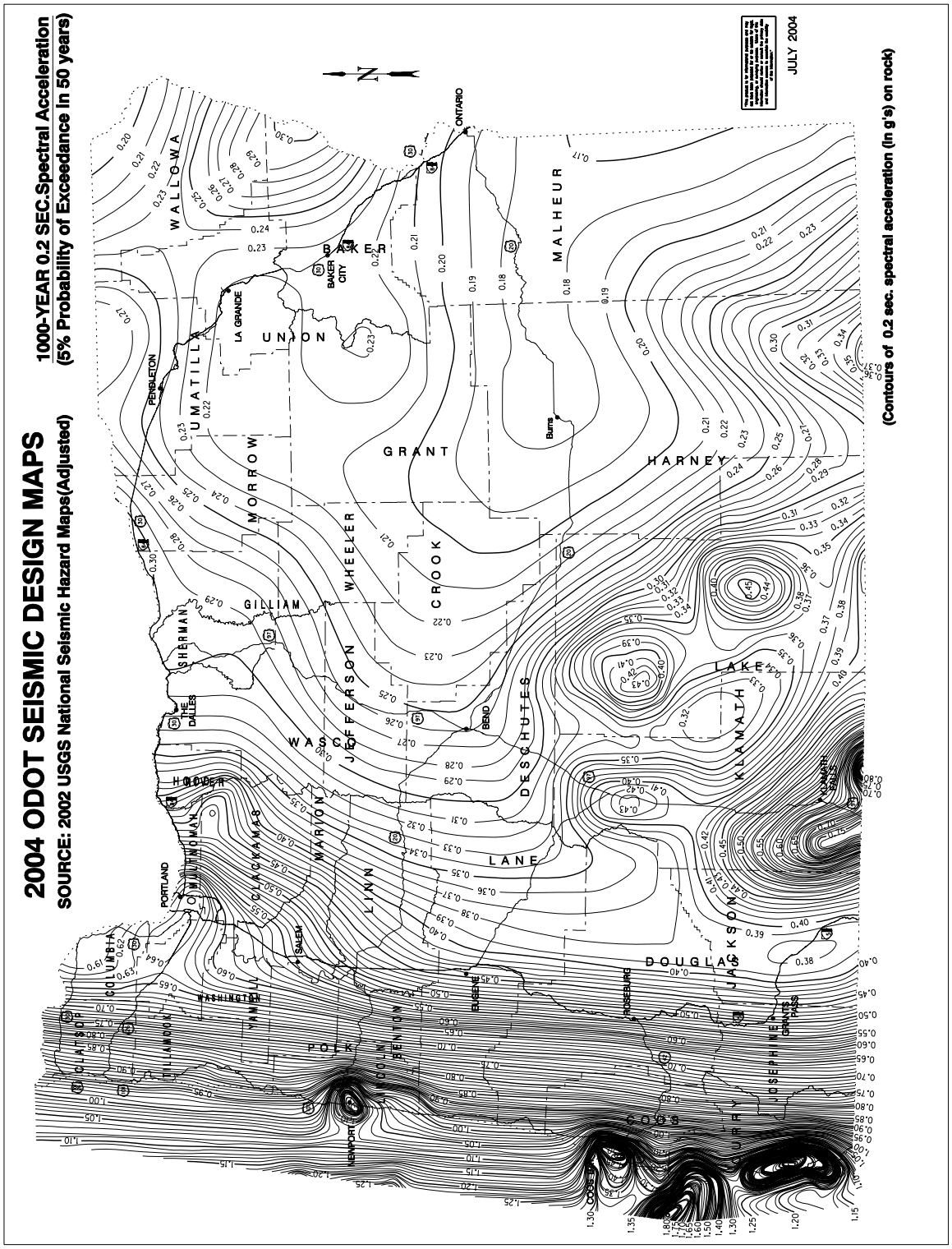

Figure 1.1.10.1E

1.1.10.1 Seismic Design, General - (continued)

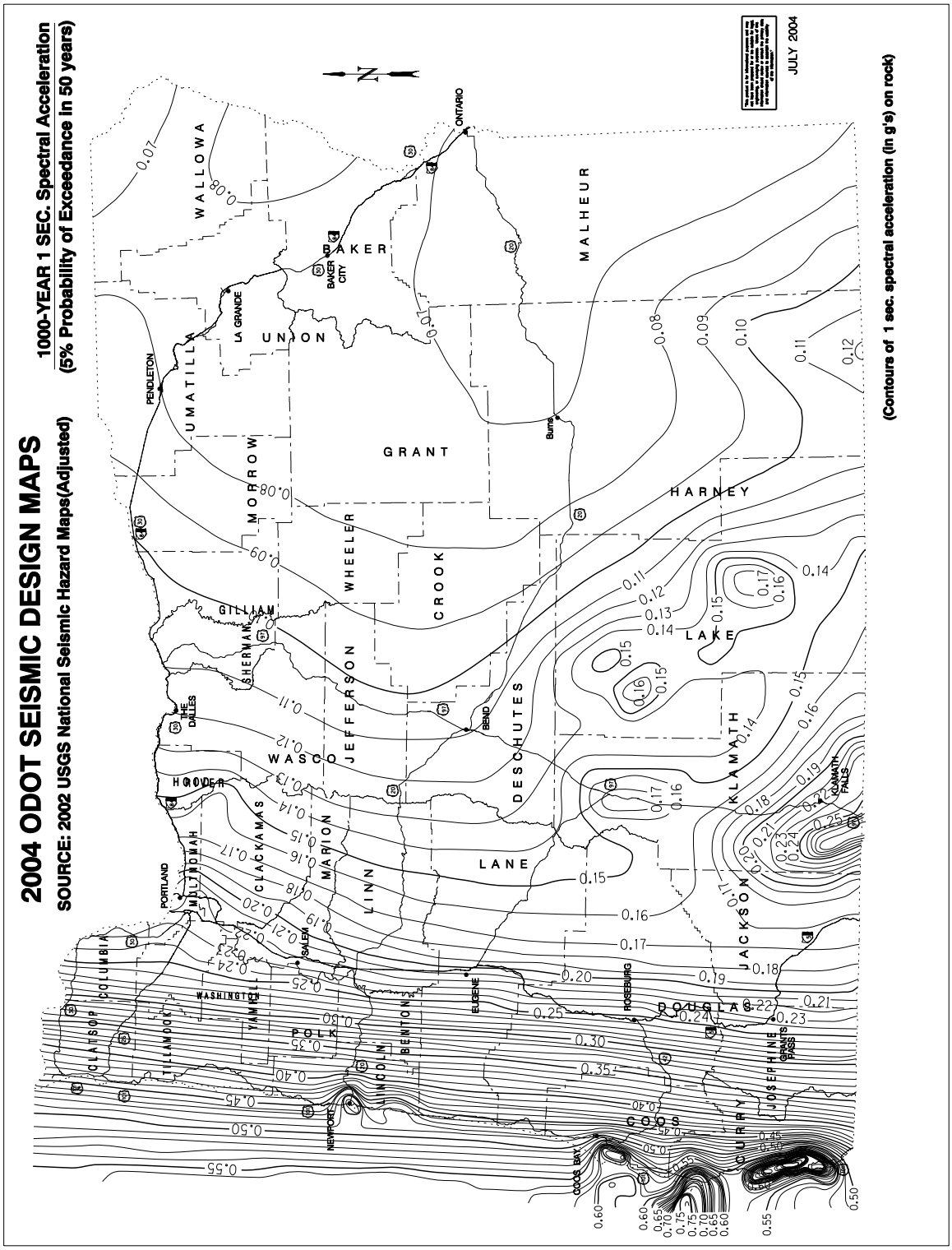

Figure 1.1.10.1F

1.1.10.1 Seismic Design, General - (continued)

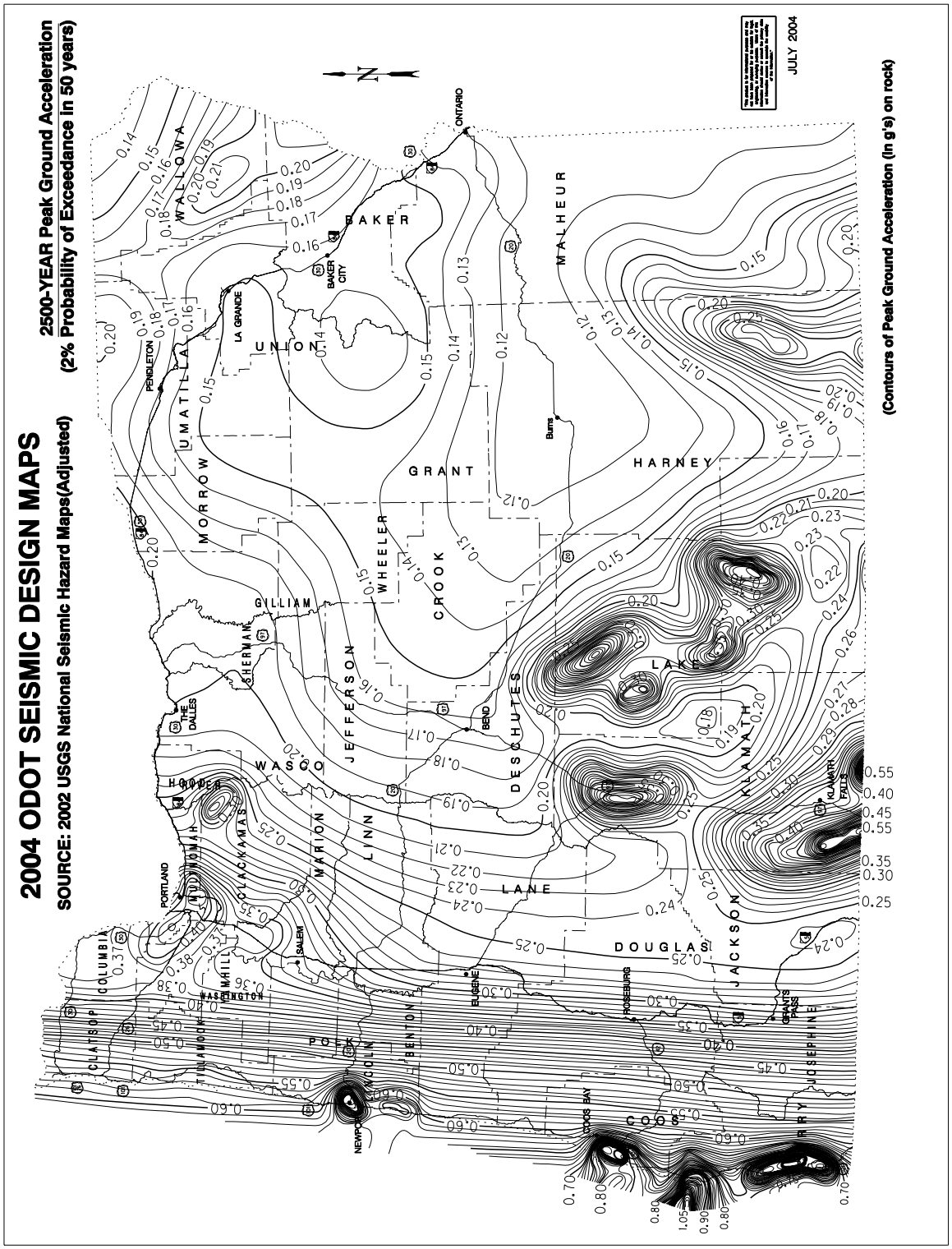

Figure 1.1.10.1G

1.1.10.1 Seismic Design, General - (continued)

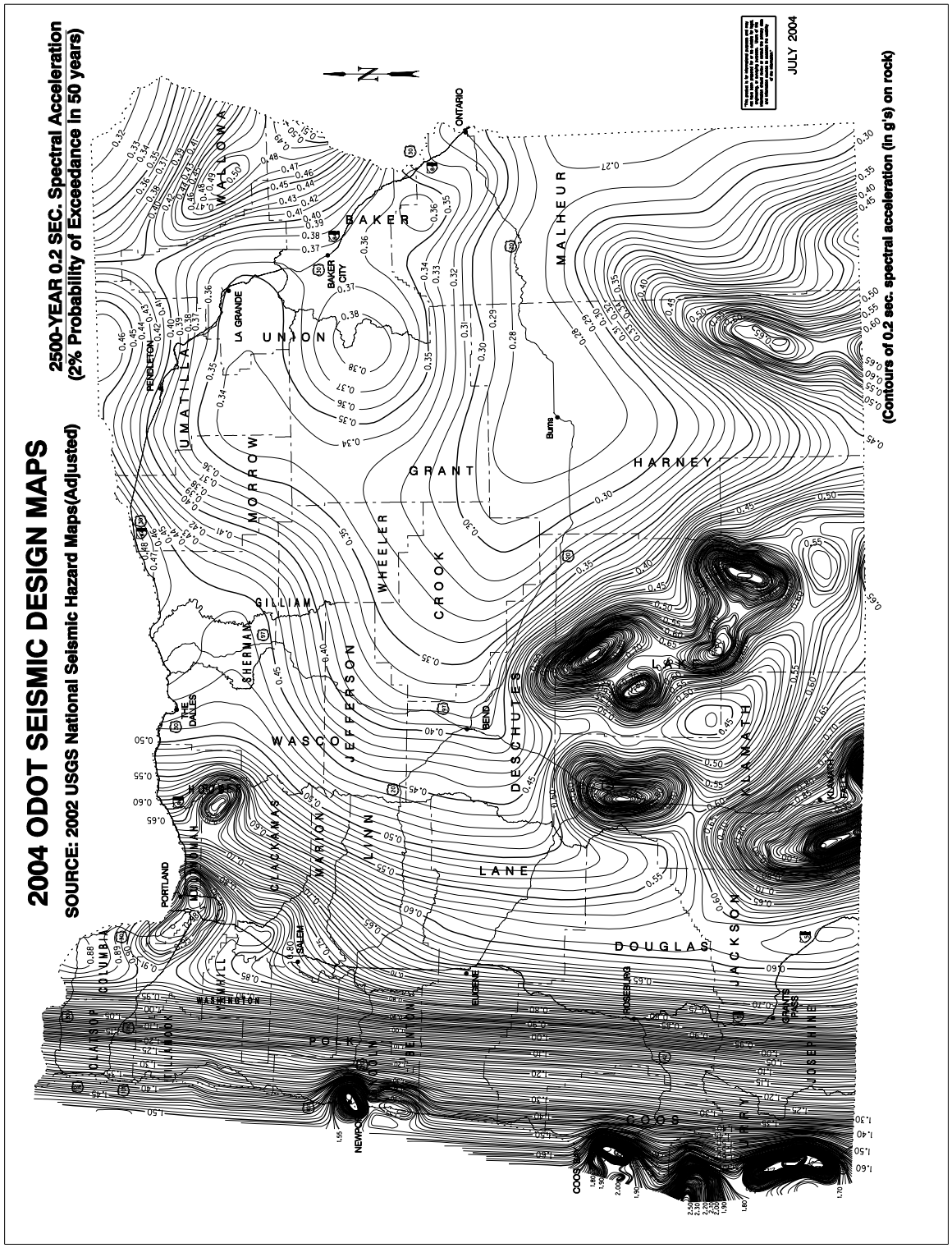

Figure 1.1.10.1H

1.1.10.1 Seismic Design, General - (continued)

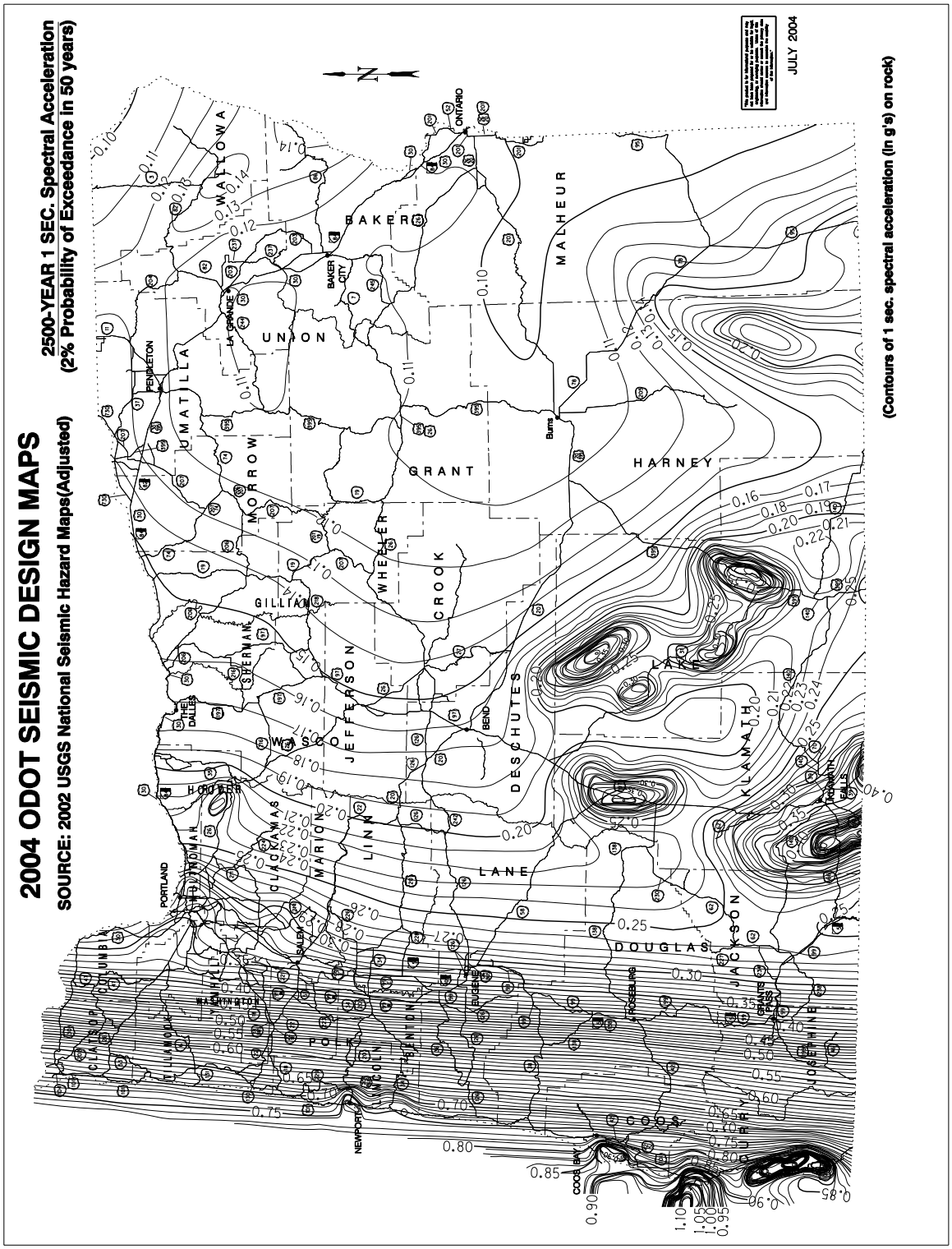

Figure 1.1.10.1I

1.1.10.1 Seismic Design, General - (continued)

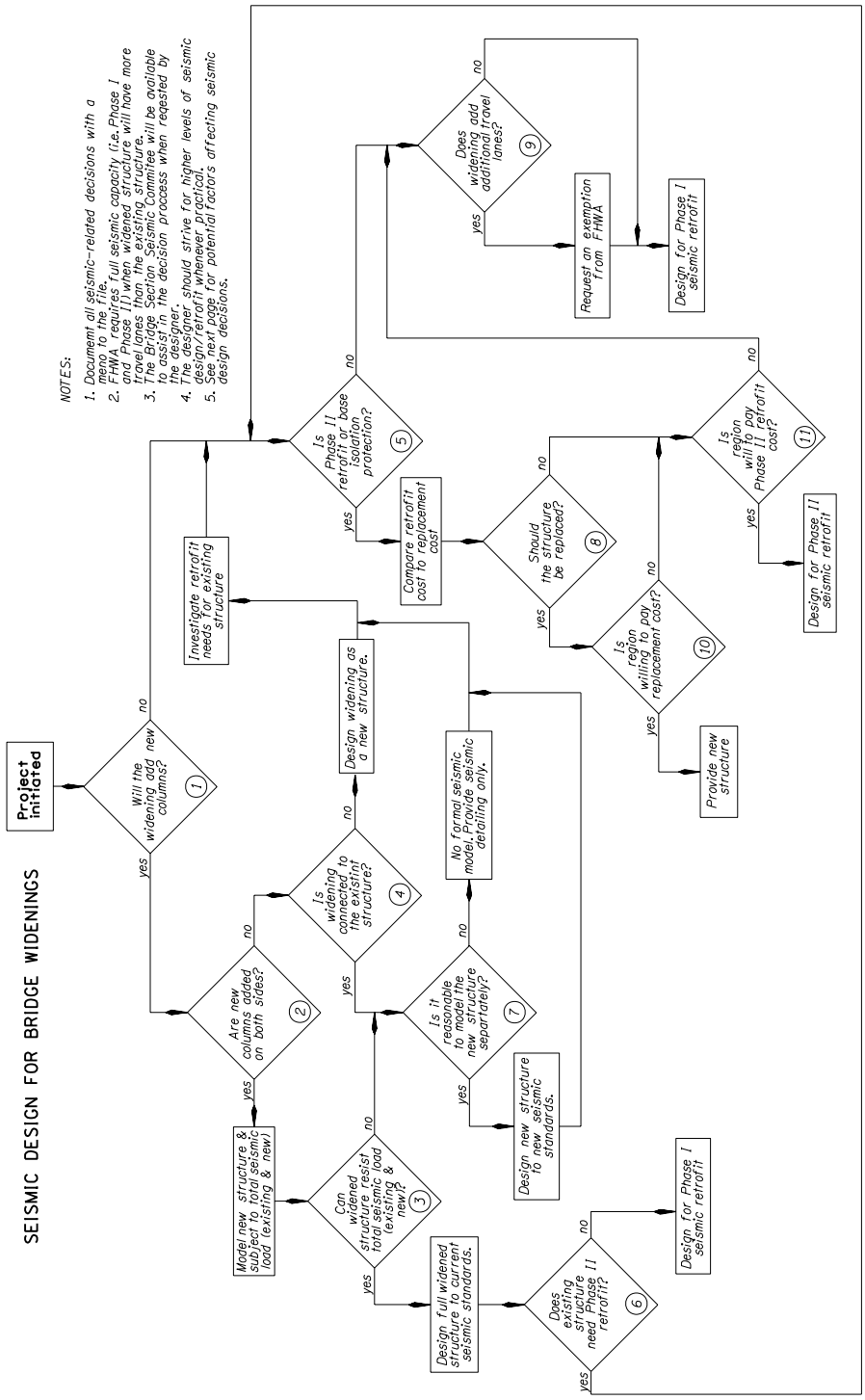

Figure 1.1.10.1J

BACK

1.1.10.1 Seismic Design, General - (continued)

SEISMIC DESIGN FOR BRIDGE WIDENINGS

Potential Factors Affecting Seismic Decisions (see Flow Chart, Figure 1.1.10.1C)

Question 1

Widening without adding new columns will make a bridge more vulnerable to seismic loads. Clearances for railroads or highways under structures may prevent adding new columns.

Question 2

Widening on both sides will increase the potential for the new portion to be able to resist seismic loads for the full widened structure.

Widening on one side only may actually result in a completed structure that is more vulnerable than the original structure.

If widening is on one side only, is there a possibility another future widening could be placed on the opposite side?

It will not normally be practical for a widening to resist the total seismic load (existing and widening) when widening on only one side; there will be exceptions, however!

Question 3

A formal seismic analysis may be required to answer this question.

Although the existing structure may have inadequate capacity, it will have some capacity that can probably be taken advantage of.

Question 4

Structures which are connected must have compatible deflections at connections.

We are usually not concerned about the seismic load generated from one structure colliding with an adjacent structure; there are exceptions, however!

Providing a joint between the widening and existing structure will probably increase the potential for the new portion to resist seismic loads. If the widening adds enough width for at least two lanes and the longitudinal joint would not be in a travel lane, a joint should be considered.

Question 5

Base isolation is strongly encouraged, especially when bearing replacement is required anyway.

When footing strengthening is required, Phase 2 will probably not be practical due to the high cost. If cost is the primary decision factor, a realistic estimate of Phase 2 retrofit cost should be prepared. Don't say it costs too much without knowing how much too much is!

The closer footings are to the ground surface, the more practical Phase 2 will become.

BACK

1.1.10.1 Seismic Design, General - (continued)

SEISMIC DESIGN FOR BRIDGE WIDENINGS - (continued)

Potential Factors Affecting Seismic Decisions - (continued)

Question 6

If existing columns are not stressed beyond the elastic range they will probably not need a Phase 2 retrofit.

The existing structure will have to go through the same deformations as the new portion even though the capacity may not be included in the seismic analysis.

Question 7

If you can't see the new portion acting separately, do not waste time assuming it will!

Widening with only one new column per bent vs. multiple columns on the existing structure probably do not need to be modeled separately.

Consider the potential for another future widening. Perhaps size the footings larger than necessary.

Question 8

Is it even possible to close the structure to replace it? Can it be replaced in stages? Is it historic?

A new structure will usually be far superior to a "band-aided" structure.

Question 9

FHWA requirements take effect when the new structure actually has more travel lanes than the existing structure. Widenings that add only shoulder width or median width are not affected. FHWA requirements may assist in convincing Region of including Phase 2 seismic retrofit, but it is not intended to force a Phase 2 retrofit when it really is not practical.

For projects exempt from FHWA review, the Technical Services Branch Manager will approve exceptions to FHWA policy.

Question 10

Region holds the money. They may have factors/priorities we don't know about.

Question 11

Refusal by Region to fund the needed retrofit and refusal by FHWA to grant an exception (if federal funding) could lead to cancellation of the project.

It would be desirable to calculate a cost-benefit ratio. Unfortunately, no guidelines are available to determine the appropriate input values.

BACK

1.1.10.2 Specification Interpretations and Modifications

Nomenclature:

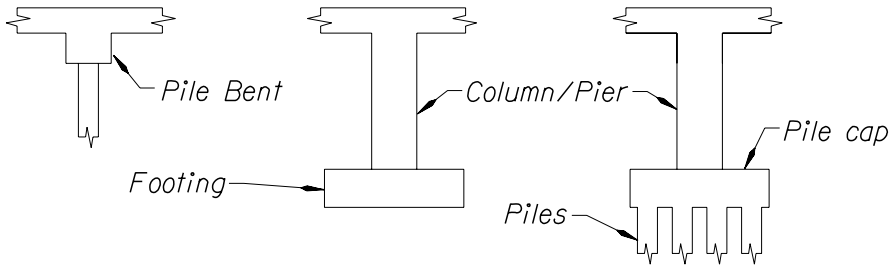

Figure 1.1.10.2A

Response Modification Factors and other Special Items:

- <u>All Single Spans:</u>
  - No response modification factors -- not applicable.
  - Provide for connection force of: weight x "A" x "S" or provide specified minimum support length from LRFD equation 4.7.4.4-1.
  - Free standing abutments (expansion jointed systems) are to be designed for pseudostatic Mononobe-Okabe method lateral earth forces.
- <u>Zone 1:</u>
  - No response modification factors--not applicable.
  - Provide for connection force of: weight x 0.20 or provide specified minimum support length.
- <u>Zone 2:</u>
  - Design and detail Zone 2 structures by Zone 3 criteria except for the following design provisions:
  - When determining the capacity for compression-controlled sections for extreme event limit state use Resistance Factors of 0.75 in accordance with AASHTO 5.5.4.2.1 as specified for zone 2.
  - When designing the reinforcement for compression members, design in accordance with AASHTO LRFD section 5.7.4.2 “Limits of Reinforcement” for seismic Zone 2.

To determine the seismic zone, use the acceleration coefficient, A, based on the 1000 year return period PGA map from ODOT Figure 1.1.10.1D

BACK

1.1.10.2 Specification Interpretations and Modifications – (continued)

- Zones 3 and 4:

  - Columns and Piers:
    - Moment: R= 2 to 5 (LRFD Table 3.10.7.1-1)
    - Shear: R= 1 (right side of Table 3)
    - Axial: R= 1

NOTE: The plastic hinging capacity should be determined from column interaction curveswith axial and moment Φ values of 1.0. Enter the curve with the unfactored dead load axial force (plus any redundancy induced axial force due to lateral seismic loading), determine the accompanying moment capacity and multiply this value by 1.3. This is the plastic moment capacity.

  - Foundations:
    - Pile Bent: Treat as columns and piers (R=5). Splices shall be designed to at least the lesser of $1.3xM_{plastic}$ for the portion above or below the splice. This splicing requirement shall not apply to full penetration welded splices.

  - Footing-pile cap-piles:
    - Moment, shear, & axial: R = 1 (elastic analysis forces) or,
    - Moment: Plastic moment capacity of the selected column.
    - Shear and Axial: Value accompanying the plastic moment capacity of the column (see "Columns" above).

  - Other Special Items:
    - Confining Reinforcing (plastic hinge zones)

      Confining transverse reinforcing required in plastic hinging zone.

      Amount by LRFD equations (5.7.4.6-1, 5.10.11.4.1d-1, 5.10.11.4.1d-2, and 5.10.11.4.1d-3).

      Plastic zone limits by the greatest of maximum column dimension, height/6, or 18”.

      Extend confining reinforcement into footing or crossbeam by the greatest of maximum column dimension/2 or 15”.

      Maximum confining reinforcement spacing is the lessor of the least member dimension/4 or 4”.

      Shear reinforcing meeting the detailing requirements of confining reinforcement may be considered as part of the required confining reinforcing.

    - Column Moment Strength Reduction Factor (Φ factor)

      Use Φ of 0.5 for axial stress > $0.2f'_c$. Vary Φ linearly form 0.5 to 0.9 for axial stress between $0.2f'_c$ and 0.

BACK

1.1.10.2 Specification Interpretations and Modifications – (continued)

- Column Shear Strength Modifications (end regions)

  End region limits by lessor of maximum column dimension, height/6 or 18".

  If axial stress > $0.1f'_c$ use normal V_c. Vary V_c linearly from normal value to 0 for axial stress between $0.1f'_c$ and 0.

  Applied shear stress not to exceed $12\sqrt{f'_c}$.

- Longitudinal Reinforcement Development

  Provide anchorage development for steel stress $1.25f_y$.

1.1.10.3 Detailing

(1) Columns:

- For column design and reinforcement practices, see Section 1.1.9.

(2) Footings:

- All footings must have a top mat of bars whether or not uplift is calculated. Extend spirals at least 2" into top of the footing. Place the footing top mat immediately below the spiral termination. Place additional spirals below the mat (use a 6" spiral gap) as needed to meet the confining reinforcement layout of Section 1.2.7.11. Use the same spiral pitch at all locations. See the optional detail for alternate containment reinforcing in the column to footing connection in Section 1.2.7.10.

- Note the allowable reduction in reinforcement development length for bars enclosed within a spiral (AASHTO *LRFD Bridge Design Specifications* Article 5.11.2.1.3).

(3) Crossbeams:

- Column to crossbeam connections where plastic moment capacity is required shall have spirals extending into the crossbeam in the same general manner as described above for the column-to-footing connection.

1.1.10.4 Structure Modeling

(1) Structure Modeling, General:

- Use a "first cut" analysis with fixed supports. These results will be easier to interpret than a spring supported model and will give a baseline for comparison with additional analyses. With these results, make a rough substructure design. Now a new analysis can be performed with footing springs and the substructure design checked and refined. Additional cycles of redesign, analysis, and force comparison to previous analyses could be used in some cases but generally would not be required or warranted.

- A reasonable target for a seismic design check is 20 percent. Designer and Checker should resolve differences greater than 20 percent, but it is impractical to try to refine

BACK

the design beyond that.

1.1.10.4 Structure Modeling - (continued)

(2) Footing Springs:

- See Section 1.1.4.

(3) Programs:

- The Uniform Load and single mode dynamic analysis methods are acceptable for many structures (see the code limitations) but multi-mode dynamic analysis by computer may be easier. The result of any analysis method must be judged for correctness. Is the result reasonable? Reviewing the calculated periods, modal participation factors and mode shapes can greatly aid this judgment. A high level of engineering judgment will be required at all times.

- M-STRUDL, a PC program, is ODOT's primary in-house static and dynamic analysis tool. GT-STRUDL, SEISAB, SAP5, ORESAP, and SAP90 can also solve dynamic problems although they are not as user friendly as M-STRUDL. Other programs are acceptable, provided the programs satisfy the analysis requirements and have been previously verified.

(4) Sample Problems:

- Sample problems for are shown in the Bridge Example Design notebook.

1.1.10.5 Footing/Pile Cap Design

(1) Piling:

- Nominal pile resistances should be used with the seismic load case (Table 3.4.1-1, Extreme Event-I) to determine pile requirements. Uplift resistance may be used for friction piles if the piles are properly anchored. Consult with the Foundation designer for site specific values. Piles under tension that are not capable of resisting uplift should be neglected during analysis for seismic loadings. The remaining piles must provide sufficient support and stability.

(2) Reinforcing Steel:

- Control of cracking requirements of Article 5.7.3.4, AASHTO *LRFD Bridge Design Specifications*, do not apply to seismic load cases.

- Pile supported footings should normally have the bottom mat reinforcing above the pile tops. Footings with this scheme are preferable to thinner footings with the bottom mat detailed lower (between the piling). This is for constructability.

(3) Liquefaction:

- The liquefaction potential of foundation soils will be determined by the Foundation designer. If foundation soils are predicted to liquefy, the effects of liquefaction on foundation design and performance will be provided as described in Section 1.1.5. The need for liquefaction mitigation will be in accordance with the ODOT Liquefaction Mitigation Policy, Section 1.1.10.6.

1.1.10.6 Liquefaction Mitigation Procedures

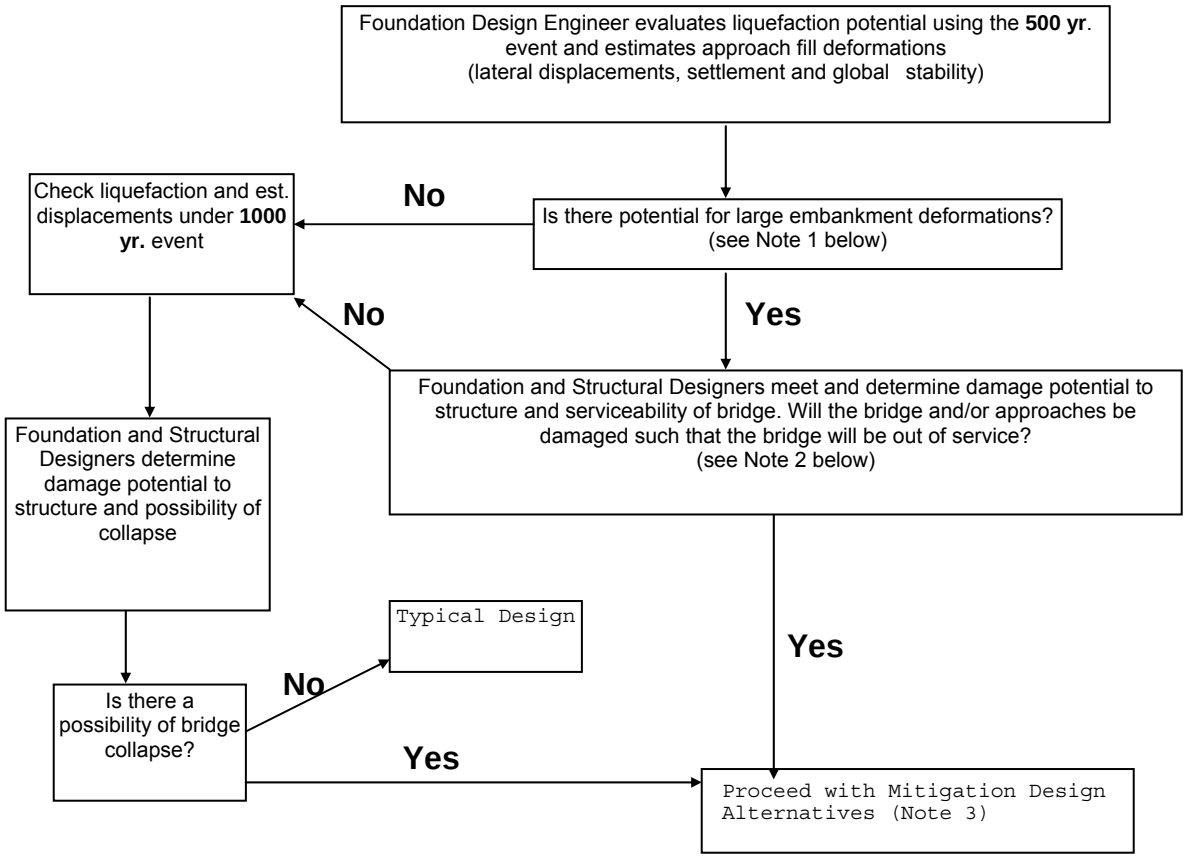

Note 1: Lateral deformations up to 12" are generally considered acceptable under most circumstances.

Note 2: The bridge should be open to emergency vehicles immediately after the 500-year design event. If the estimated embankment deformations (vertical or horizontal or both) are sufficient enough to cause concerns regarding the serviceability of the bridge mitigation is recommended.

Note 3: Refer to ODOT research report SPR Project 361: "Assessment and Mitigation of Liquefaction Hazards to Bridge Approach Embankments in Oregon", Nov. 2002 and FHWA Demonstration Project 116; "Ground Improvement Technical Summaries, Volumes I & II", (Pub. No. FHWA-SA-98-086) for mitigation alternatives and design procedures.

As a general guideline, the foundation mitigation should extend from the toe of the end slope to a point that is located at the base of a 1:1 slope which starts at the end of the bridge end panel:

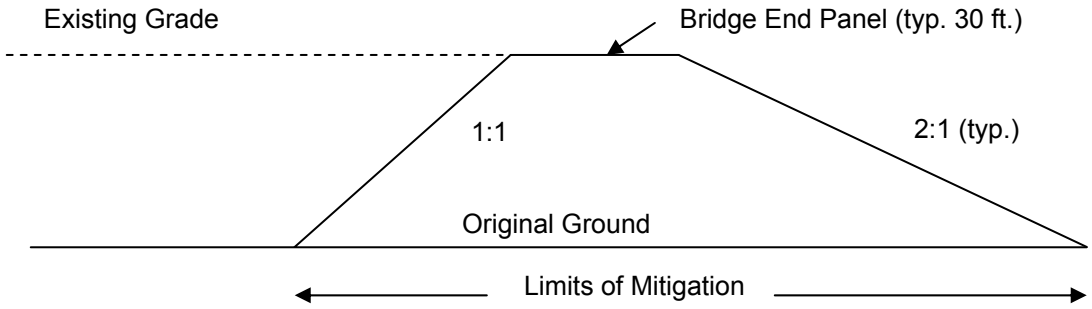

1.1.10.7 Costs

(1) Construction costs:- Apply the following factors to TS & L (preliminary) structure cost estimates to approximate the additional cost of seismic criteria (excluding liquefaction):

- Single Spans: 1.00
- Multiple Spans: 1.30 Irregular (widely varying columns lengths or support materials; unusual geometry or curvature)
- 1.10 Other

(2) Design costs:- Apply the following factors to TS & L (preliminary) design cost estimates to approximate the additional cost of seismic design criteria (excluding liquefaction):

- Single Spans: 1.00
- Multiple Spans: 1.20 Trestles
  1.50 Irregular (widely varying columns lengths or support materials; unusual geometry or curvature)
  1.35 Other

1.1.10.8 Instrumentation

Placement of accelerometers on the ground and on structure portions should be considered for large or unusual structures. The Designer and Supervisor should consult with the Seismic Design Standards and Practice Engineer to decide if this is appropriate and fits with the ODOT Seismic Instrumentation and Monitoring Program.

BACK

1.1.10.9 Dynamic Isolators

Isolators may be useful for either new construction or retrofit work. Isolators change structure response by lengthening the periods of primary vibration. This tunes the structure response away from the typical earthquake's maximum response frequencies. This effect, along with added damping, works to reduce the system response. The result is reduced substructure forces.

Typical steps to model an isolated structure include:

1. Compute service loads (D, L, LF, CF, W, WL, R, S, T) for the worst single girder.

2. Use these loads, and the applicable seismic loading, in the Dynamic Isolation System, Inc. (DIS) program PC-LEADER to get a preliminary isolator size and its properties. DIS has given us permission to use the program even though we will not specify only their bearing.

3. Develop a full M-STRUDL model (superstructure, substructure, and bearings/isolators). Normally this will be done on a per girder basis so the substructure should be proportioned to fit this basis. The model can often be a two dimensional model.

4. In the M-STRUDL model use the equivalent isolator stiffness (K_{eff}). This stiffness should be further modified to fit modeling assumptions of a bearing cantilevered from the substructure at interior supports.

5. Load the M-STRUDL model with dynamic loading through a modified response spectrum. The response spectrum can be taken from the PC-LEADER output or developed from the Guide Specification for Seismic Isolation Design.

6. Develop another full M-STRUDL model to represent the "as-is" structure. Dynamically load this model with a normal response spectrum. This gives a basis to evaluate the isolation effectiveness.

7. It may be necessary or desirable to adjust the relative isolator stiffness to better distribute the dynamic forces. It is important the final isolator properties function adequately for service loads. The isolator characteristics must also be realistic and achievable.

An example isolator modeling is given in the Bridge Example Design notebook.

Other computer programs are acceptable, provided the programs satisfy the analysis requirements and have been previously verified.

BACK

1.1.11 Seismic Restrainer Design (New Designs And Retrofits)

1.1.11.1 Seismic Restrainer Design, General

The intent is to prevent superstructure pull-off and bearing failure. Work restrainers only in the elastic range. Design the restrainer connection for 125% of the restrainer design force.

Note that *LRFD Bridge Design Specifications,* Article 3.10.9.5 requires "sufficient slack" so that the restrainer does not start to act until the design displacement is exceeded.

Restrainers may be omitted where the available seat width meets or exceeds "N" of the Design Specifications and 4 times the calculated design earthquake elastic deflection. Seat widths meeting these criteria are presumed to accommodate the large elasto-plastic movements of a real structure under seismic loading.

Design restrainers for a minimum force equal to the peak site bedrock acceleration coefficient "A" times the weight of the lighter portion being connected.

In all instances it is necessary to design or check the transfer mechanism for force transfer from superstructure to substructure (bearings, diaphragms).

1.1.11.2 Information for Restrainer Design

(1) Concrete:

Concrete bearing strength based on $0.85f''_c$ ($\Phi = 1.0$).
Maximum increase for supporting surface wider than loaded area = 2.0.
Multiply by 0.75 when loaded area is subject to high edge stresses.

For concrete shear lugs, use Equation 5.8.4.1-1 for shear friction as outlined in AASHTO *LRFD Bridge Design Specifications,* Article 5.8.4.

(2) Structural Steel:

Design structural steel members using the AASHTO *LRFD Bridge Design Specifications*.

BACK

1.1.11.2 Information for Restrainer Design - (continued)

(3) Fasteners:

(Steel to Steel)

		A 307		A 325	
Diameter	Nominal Area (in^2)	Tension (0.76 x 60 ksi)	Shear (0.38 x 60 ksi)	Tension (0.76 x 120 ksi)	Shear (0.38 x 120 ksi)
0.75”	0.4418	20.1 k	10.1 k	40.3 k	20.1 k
0.875”	0.6013	27.4 k	13.7 k	54.8 k	27.4 k
1.0”	0.7854	35.8 k	17.9 k	71.6 k	35.8 k

Note: Tension loads are based on LRFD equation 6.13.2.10.2-1.

Shear loads are based on LRFD equation 6.13.2.7-2 assuming one shear plane per bolt and with threads included in the shear plane.

Shear loads may be increased 25% if the threads are excluded from the shear plane.

(4) Steel Rods:

		A307 Fu = 58 ksi	A449 Fu varies	
Diameter	Stress Area (in^2)	Tension (kips) Ft=Fy=36 ksi	Tension (kips) Ft = Fy	Fy (ksi)
0.750	0.334	12.0	30.7	
0.875	0.462	16.6	42.5	92
1.00	0.606	21.8	55.8	
1.125	0.763	27.5	61.8	
1.250	0.969	34.9	78.5	81
1.375	1.155	41.6	93.9	
1.500	1.405	50.6	114.0	
1.750	1.900	68.4	110.0	58
2.250	2.500	90.0	145.0	

Tensioning of A449 steel rods must be specified, if required by the design.
Tensioning requirements are not part of the specification as they are with A325.
Use nominal area for elongation calculations.

BACK

1.1.11.2 Information for Restrainer Design - (continued)

(5) Cables:

See Section 1.2.5 for a complete discussion of Steel Cables, Cable Connections & Turnbuckles. See Section 1.1.11.6, "Use of State Stockpile Cable for Seismic Retrofit."

F_t = (0.95)(176.1 ksi)(area) = 0.95(minimum breaking strength).
Note: Yield strength is approximately equal to minimum breaking strength.

Diameter (in)	Area (in^2)	Design Load (kips)
0.500	0.119	19.9
0.750	0.268	44.8
0.875	0.361	60.4

E for cable = 10,000 ksi
f_y for cable = 176.1 ksi

ASTM A 603 lists the E for cable as 20,000 ksi for "prestretched" cable. Cable used for seismic applications will not be prestretched, however, so an E of 10,000 ksi should be used.

(6) Resin Bonded Anchors:

See Section 1.1.23, "Drilled Concrete Anchors."

(7) Concrete Inserts:

Use hot-dip galvanized expanded coil concrete inserts with closed-back ferrule threaded to receive UNC threaded bolts.

Inserts are readily available in ¼ " sizes. Other sizes are only available in very large quantities. Therefore, only the standard sizes listed below are recommended.

Diameter (in)	Tension (kips) A307 or A325	Shear (kips) A307	Shear (kips) A325
0.75	12.6	7.4	12.6
1.0	19.3	13.4	19.3
1.25	34.4	21.4	34.4
1.5	54.3	31.0	54.3

Tension and shear capacity for concrete failure is based on equation 6.5.2 from the *PCI Design Handbook* (3rd Edition) with Φ = 1.0 and with a factor of safety of 1.5. Equation 6.5.2 controls both shear and tension for shallow embedment depths. See the *PCI Design Handbook* for group effects, edge distance effects and combined tension and shear.

Tension capacity of the insert cannot exceed the tension capacity of the bolt. Shear capacity of the insert cannot exceed the shear capacity of the bolt or the insert tension capacity.

Tension capacity of the bolt = $0.76A_bf_{ub}$, where A_b = bolt stress area (LRFD eq. 6.13.2.10.2-1).
Shear capacity of the bolt = $0.38A_bf_{ub}$ (LRFD eq. 6.13.2.7-2).

BACK

1.1.11.3 Longitudinal Restrainer Design

(1) In-span hinges: Use the following general procedure (a modified CALTRANS method):

- Estimate restrainers to use (with elongation) and gapping desired/allowed.
- Determine joint openings (including approximate temperature movement (fall) and creep and shrinkage if appropriate).
- Determine frame stiffness and capacity.
- Determine adjacent frame stiffness and capacity.
- Plot force/deflection relationship considering component stiffnesses, joint openings (including temperature, creep, and shrinkage openings), and restrainer gapping.
- Assume a final force and deflection under single-mode response to get equivalent stiffness.
- Calculate period and resulting response coefficient.
- Calculate dynamic force and locate on the force/deflection curve.
- Review that the force capacity of the system is not exceeded, the assumed/acceptable deflection is not exceeded, and the equivalent stiffness and period are approximately as before.
- If checks are not okay modify system and recycle through as needed.

(2) Bents with superstructure continuous over the bent:

- Connect superstructure to substructure with capacity to form plastic hinging in the column(s).

(3) Bents with only the deck continuous over the bent:

- Connect each span to substructure to form plastic hinging in the column(s).

(4) Bents with no superstructure continuity over the bent:

- With frames each side of bent:
- Connect each span to substructure to form plastic hinging in the column(s). Also connect adjacent superstructure portions by the same techniques as “in-span hinges.” The adjacent super-structure portions may be connected by span to substructure connections of adequate capacity to function for both portions.
- With simple spans each side of bent:
- Connect each span to the substructure to form plastic hinging in the column(s).

NOTE: The plastic hinging capacity should be determined from column interaction curves with axial and moment Φ values of 1.0. Enter the curve with the unfactored dead load axial force (plus any redundancy induced axial force due to lateral seismic loading), determine the accompanying moment capacity and multiply this value by 1.3. This is the plastic moment capacity.

BACK

1.1.11.4 Transverse Restrainer Design

(1) In-span hinges:

- Design for force transfer of (2.5) (A) (supported dead load).

(2) Bents with superstructure continuous over the bent:

- Connect supported spans with force to form a failure mechanism (plastic hinging at the top of frame (column or crossbeam) and plastic hinging at bottom of column.

(3) Bents with only the deck continuous over the bent:

- Connect supported spans with force to form a failure mechanism (plastic hinging at the top of frame (column or crossbeam) and plastic hinging at bottom of column.

- Prorate design force to ahead and back side of bent by dead load ratio.

(4) Bents with no superstructure continuity over the bent:

- Connect supported spans with a force equal to 2.5(A)(supported dead load).

NOTE: The plastic hinging capacity should be determined from column interaction curves with axial and moment Φ values of 1.0. Enter the curve with the unfactored dead load axial force (plus any redundancy induced axial force due to lateral seismic loading), determine the accompanying moment capacity and multiply this value by 1.3. This is the plastic moment capacity.

1.1.11.5 Hold-downs

Hold-downs or bearing replacement may be needed at vulnerable bearings such as fixed or rocker type steel bearings.

1.1.11.6 Use of State Stockpile Cable for Seismic Retrofit

(1) Introduction – To achieve economy and supply stability, Bridge Section has purchased a quantity of structural wire rope (cable) to be used on future seismic retrofit projects. The cable is stockpiled in Portland. Before using cable, contact Craig Shike, Bridge Section. Use the following notes and special provisions.

(2) In the General Notes:

- Cable for seismic restraint devices will be furnished by the Department.
- See Section 00160.30 of the Special Provisions.

(3) In Section 00160.30 of the Special Provisions:

- 0.875” diameter structural wire rope (cable) will be provided by the Department. The cable is stored at the following location:
  c/o District 2B Manager
  Oregon Department of Transportation
  9200 SE Lawnfield Rd
  Clackamas, OR 97015
  Phone: (503) 653-3086

BACK

1.1.11.6 Use of State Stockpile Cable for Seismic Retrofit – (continued)

Notify Bridge Section of the quantity of cable removed within 24 hours. Follow up this notification with a written memo documenting the time of removal, quantity removed (to the nearest foot), and the project for which it will be used. Send the memo to:

Craig Shike, Concrete Design Standards and Practice Engineer
Oregon Department of Transportation
355 Capitol St. NE, Room 301
Salem, OR 97301-3871
Phone: (503) 986-3323
Fax: (503) 986-3407

The quantity of cable included for use in this project, including both testing and installation, is ( ) linear feet. This quantity of cable will be provided at no cost to the Contractor. Any additional cable required by the Contractor due to fabrication errors and/or waste must be purchased from the Department at the Department's cost as established by the Engineer.

1.1.12 Concrete

1.1.12.1 Concrete General

Designate the concrete class by the minimum compressive strength at 28 days followed by the maximum aggregate size (e.g., Class 4000 – 3/4). Unless otherwise specified, Class 3600 – 1-1/2, 1 or 3/4 is called for by the Standard Specifications. The ultimate strength on which allowable stresses are based should not exceed 5000 psi, except for prestressed concrete. Use High Performance Concrete (HPC) in all cast-in-place concrete decks and end panels.

Classes of Concrete
(For design and to be shown on plans)

HPC4000 – 1 ½, 1, or ¾	All poured decks [except Box Girder decks that require greater strength]
HPC4000 -1-1/2. 1, or ¾	End Panels
XXXX - ¾	Prestressed members [Does not include poured deck on prestressed members, see above]
XXXX – 3/4	Post-tensioned members
XXXX – 3/4	Compression Members
3600 – 1 ½ , 1, or 3/4	All other concrete

BACK

1.1.12.1 Concrete General – (continued)

Modulus of Elasticity

The modulus of elasticity of concrete may be taken as $E_c = 33{,}000\ w_c^{1.5} \sqrt{f'c}$, for $w_c = 0.145$ kcf

Concrete Strength f'c (ksi)	E_c (ksi)	$n=E_s/E_c=29{,}000/E_c$
3.000	3150	9
3.600	3450	8
4.000	3650	8
5.000	4050	7
5.500	4250	7
6.000	4450	6
6.500	4650	6
7.000	4800	6

In the chart above, the modulus of elasticity (E_c) is rounded to the nearest 50 ksi and the modular ratio (n) is rounded to the nearest integer. The designer may choose to calculate these values using standard formulas rather than using the values above. Where the designer calculates a modular ratio, it may be either rounded to the nearest integer or not rounded.

1.1.12.2 Concrete Finish

Concrete finishes are defined in Section 00540.52 of the *Oregon Standard Specifications for Construction*. The usual finishes are General Surface Finish and Class 1 Surface Finish. Occasionally, Class 2 Surface Finish is used as mentioned in the following paragraph.

Generally, concrete finishes are selected as follows:

- For bridges whose superstructure and substructure can be viewed by the public, such as grade separations and river crossings in or near populated areas, exposed surfaces receive a Class 1 Surface Finish. In special situations of high visibility to traffic or people, use of a Class 2 Surface Finish may be considered. Normally, it is limited to the concrete rail sides facing the roadway/bikeway and the tops.

- For bridges not viewed by large segments of the public, such as stream crossings in sparsely populated areas, exposed surfaces, except portions of the concrete bridge rail, receive a General Surface Finish. The concrete rail sides facing the roadway/bikeway and tops receive a Class 1 Surface Finish.

Review your selected surface finish with your Design Team.

Do not use color additives in concrete mixes. Provide color to conccrete only by coating with either concrete stain or concrete paint products from the QPL.

BACK

1.1.12.2 Concrete Finish – (continued)

Include details similar to the following for all contract plans:

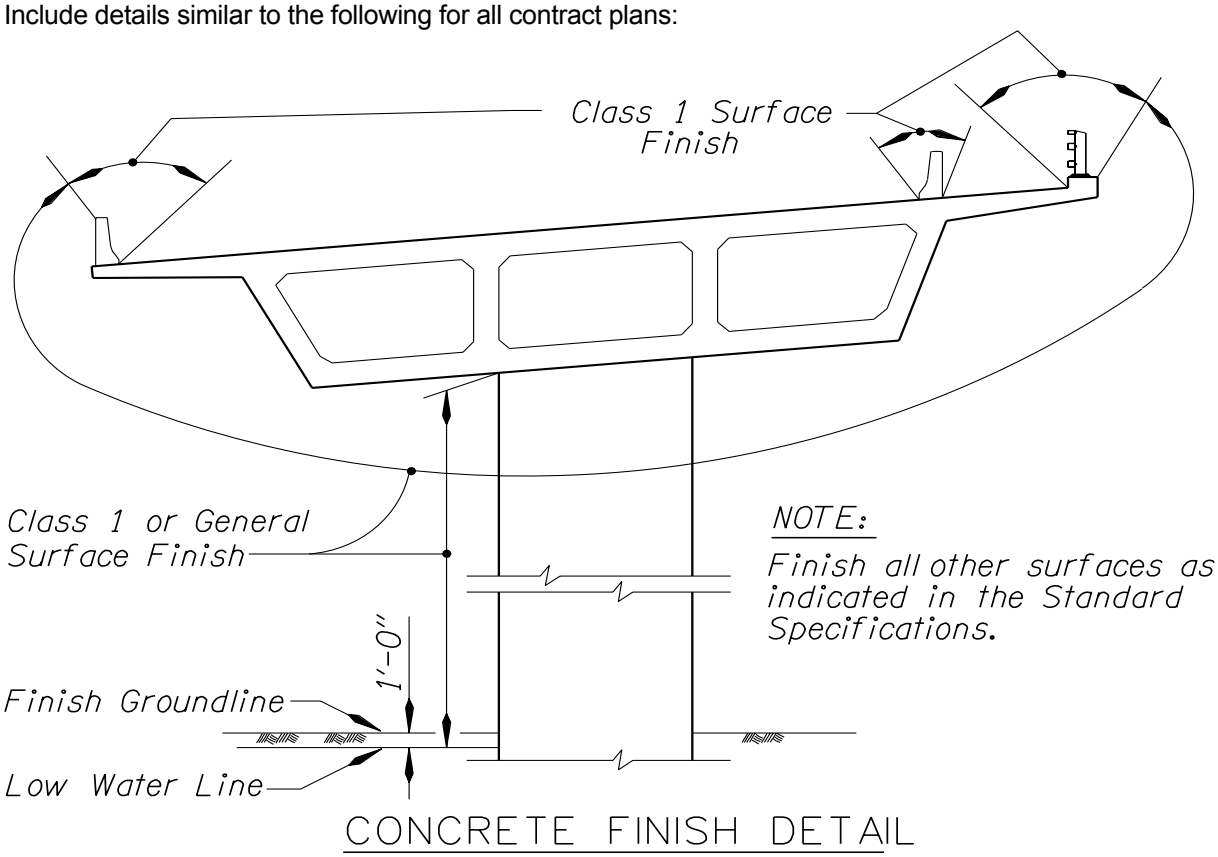

Figure 1.1.12.2A

1.1.12.2 Concrete Finish -- (continued)

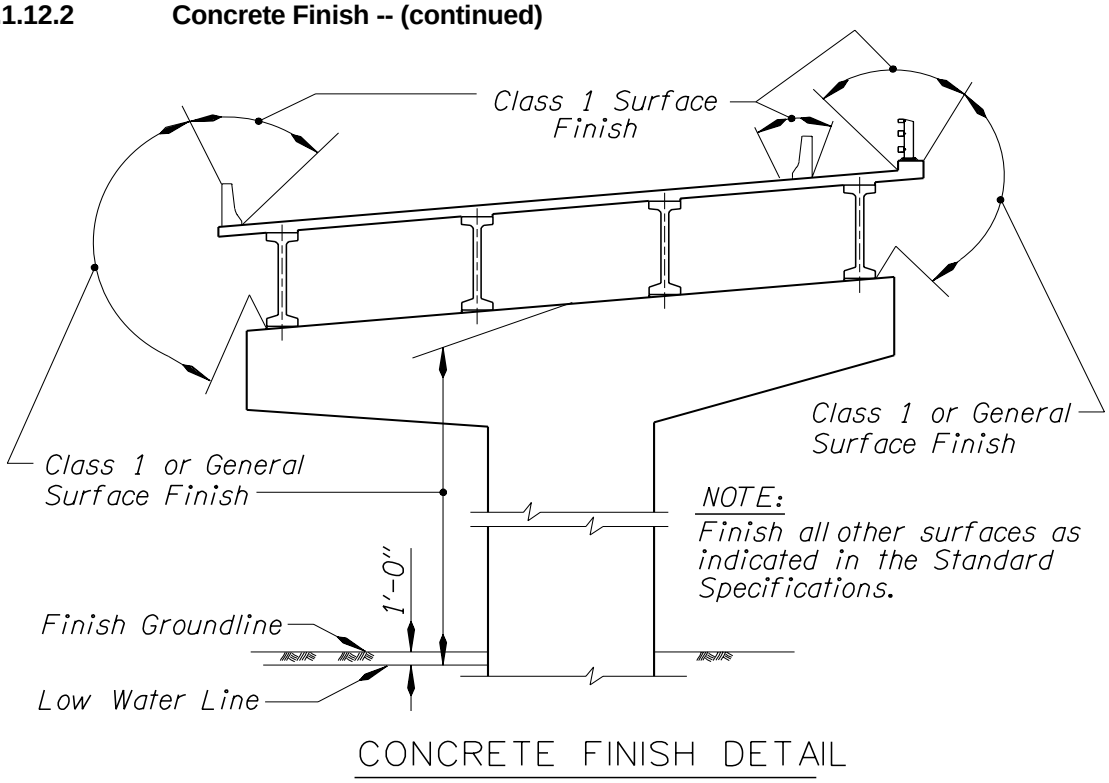

Figure 1.1.12.2B

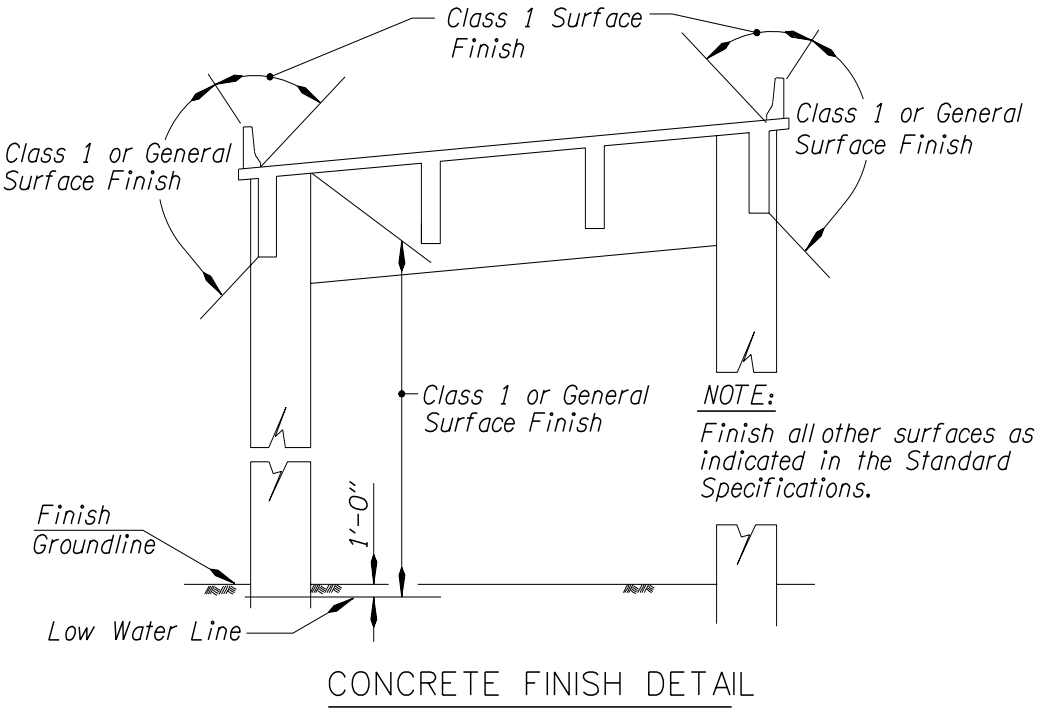

Figure 1.1.12.2C

1.1.12.3 Concrete Repair (Bonding Agents)

Bonding agents are used to help new concrete adhere to existing concrete. To obtain better bond with agents the existing surface must be clean, dry and at proper temperature. The surfaces must also be well exposed to facilitate brush application of the bonding agent. Two principal bonding agents are in use today:

- Epoxy - These agents provide the best bond when properly applied. However, they are highly volatile and if the agent is allowed to dry before placement of the new concrete, a bond breaker may be formed. For this reason restrict the use of epoxy agents to critical situations where control can be guaranteed.

- Concrete - These agents have longer pot life and improved bond. They may be applied with greater lead time, but have the same application requirements as epoxy agents.

At normal construction joints, a bonding agent is not generally needed. Mating surfaces prepared to the specifications should provide acceptable bond and shear transfer through the roughened surface and rebar holding a tight joint.

BACK

1.1.13 Reinforcement

1.1.13.1 Reinforcement, General

Make sure there is enough room for bars to fit and to place concrete. Be sure steel can be placed and supported. Show bolster bars on reinforcement details when needed.

(1) <u>Standard Bar Chart</u>

Bar	Nominal Dia. (in)	Area (in^2)	Weight (lb/ft)
#3	0.375	0.11	0.376
#4	0.500	0.20	0.668
#5	0.625	0.31	1.043
#6	0.750	0.44	1.502
#7	0.875	0.60	2.044
#8	1.000	0.79	2.670
#9	1.128	1.00	3.400
#10	1.270	1.27	4.303
#11	1.410	1.56	5.313
#14	1.693	2.25	7.650
#18	2.257	4.00	13.60

Figure 1.1.13.1A

BACK

1.1.13.1 Reinforcement, General - (continued)

(2) Minimum Bar Covering

The minimum covering measured from the surface of the concrete to the face of any uncoated or coated reinforcing bar should be not less than 2” except as follows.

Top of deck slab (main reinforcing)*	2.5”
Bottom of deck slab*	1.5”
Stirrups and ties in T-beams and outside faces of box girders, bottom rebar of slab spans, and curbs and rails*	1.5”
Stirrup ties and bottom slab steel at inside faces of box girders	1”
All faces in precast members (slabs, box beams and girders)	1”
Pier and column spirals, hoops or tie bars+ (increase to 4” if exposed to marine environment or concrete is deposited in water)	2.5”
Footing mats for dry land foundations (use 6” if ground water may be a construction problem)	3”
Footing mats for stream crossing foundations	6”

*Use 2” minimum cover for all surfaces exposed to the effects of a marine environment, Section 1.1.25.1.
+Cover over supplementary crossties may be reduced by the diameter of the tie.

Figure 1.1.13.1B

BACK

1.1.13.1 Reinforcement, General - (continued)

(3) Reinforcement for Shrinkage and Temperature

Provide reinforcement for shrinkage and temperature stresses near exposed surfaces of bents, walls and slabs not otherwise reinforced. The area of reinforcement per surface should be at least 0.0008 times the gross concrete area with a minimum of #4 at 18" centers. Space the reinforcement no farther apart than three times the wall or slab thickness or a maximum of 18" centers.

Thickness (in)	A_s (in^2/ft)	MAXIMUM BAR SIZE AND SPACING FOR ONE SURFACE (inches)			
6 9 12	.057 .086 .115	#4 @ 18 #4 @ 18 #4 @ 18			
15 18	.144 .173	#4 @ 15 #4 @ 12			
21 24 27	.201 .230 .260	#4 @ 12 #4 @ 10 #4 @ 9	#5 @ 18 #5 @ 15 #5 @ 12		
30 36	.288 .345		#5 @ 12 #5 @ 10	#6 @ 18 #6 @ 15	
48 60	.461 .576			#6 @ 12	#7 @ 15 #7 @ 12

Figure 1.1.13.1C

Since the amount of reinforcement is somewhat empirical, convenient spacing can be assumed as shown in the above table. This recommended reinforcement is intended to be a minimum required for shrinkage and temperature only.

(4) Spacing of Shear Reinforcement

Where shear reinforcement is required and placed perpendicular to the axis of the member, spacing is not to exceed 18".

(5) Negative Moment Reinforcement

For cantilever cross beams with wide bents, extend at least one-half of the negative reinforcement the full length of the cross beam.

BACK

1.1.13.1 Reinforcement, General - (continued)

(6) Minimum Bar Spacing

Bar	Nominal Dia.(d) (in)	2.5 x d or 1.5"+d (in)	(1.5x1.5) + d for 1.5" agg. (in)	(1.5x0.75)+ d for 0.75" agg. (in)
#3	0.375	1.875	2.625	1.500
#4	0.500	2.000	2.750	1.625
#5	0.625	2.125	2.875	1.750
#6	0.750	2.250	3.000	1.875
#7	0.875	2.385	3.125	2.000
#8	1.000	2.500	3.250	2.125
#9	1.128	2.820	3.378	2.253
#10	1.270	3.175	3.520	2.395
#11	1.410	3.525	3.660	2.535
#14	1.696	4.240	3.946	2.821
#18	2.257	5.643	4.507	3.382

Figure 1.1.13.1D

(7) <u>*Tension Development Length - GRADE 60</u>

f'c	3600 psi	4350 psi	5000 psi
#3	1'-0"	1'-0"	1'-0"
#4	1'-0"	1'-0"	1'-0"
#5	1'-3"	1'-3"	1'-3"
#6	1'-6"	1'-6"	1'-6"
#7	2'-0"	1'-10"	1'-9"
#8	2'-8"	2'-5"	2'-3"
#9	3'-4"	3'-0"	2'-10"
#10	4'-3"	3'-10"	3'-7"
#11	5'-2"	4'-9"	4'-5"
#14	7'-2"	6'-6"	6'-1"
#18	9'-3"	8'-5"	7'-10"

* Note: Increase lengths 40% for epoxy coated bars.

Figure 1.1.13.1E

BACK

1.1.13.1 Reinforcement, General -- (continued)

(8) *Compression Development Length - GRADE 60

f'c	3600 psi	4350 psi	5000 psi
#3	8”	7”	7”
#4	10”	10”	9”
#5	1’-1”	1’-0”	11”
#6	1’-3”	1’-2”	1’-1”
#7	1’-6”	1’-4”	1’-3”
#8	1’-8”	1’-7”	1’-5”
#9	1’-11”	1’-9”	1’-8”
#10	2’-2”	2’-0”	1’-10”
#11	2’-5”	2’-2”	2’-0”
#14	2’-10”	2’-7”	2’-5”
#18	3’-9”	3’-5”	3’-3”

Note: Increase lengths 40% for epoxy coated bars.

Figure 1.1.13.1F

(9) *Tension Development Length of Hooks - GRADE 60

f'c	3600 psi	4350 psi	5000 psi
#3	8”	7”	7”
#4	11”	10”	9”
#5	1’-1”	1’-0”	11”
#6	1’-4”	1’-2”	1’-1”
#7	1’-6”	1’-4”	1’-3”
#8	1’-9”	1’-7”	1’-5”
#9	1’-11”	1’-9”	1’-8”
#10	2’-1”	2’-0”	1’-10”
#11	2’-5”	2’-2”	2’-0”
#14	2’-10”	2’-7”	2’-5”
#18	3’-10”	3’-6”	3’-3”

* Note: Increase lengths 40% for epoxy coated bars.

Figure 1.1.13.1G

1.1.13.1 Reinforcement, General - (continued)

(10) Minimum Column Bar Lengths in Footings

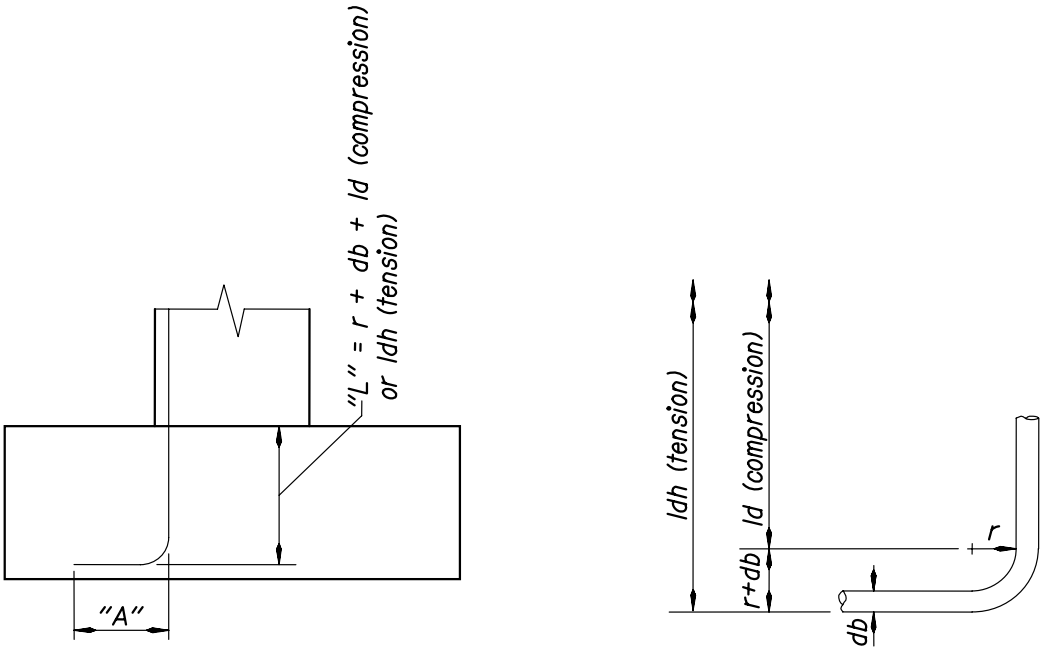

Note:
Increase ld or ldh 40 percent or epoxy coated bars
"A" and r + db are standard 90° hook dimensions
ld is the compression development length
ldh is the tension development length for standard hooks
See appropriate AASHTO Articles for reduction factors

GRADE 60 REINFORCEMENT ~ fc = 3600 psi CONRETE					
BAR SIZE	"A"	r + d_b	*ld (ldb x 1.0)	COMPRESSION "L"	TENSION "L" *ldh (lhb x 1.0)
6	1'-0"	3"	1'-4"	1'-7"	1'-4"
7	1'-2"	4"	1'-7"	1'-11"	1'-7"
8	1'-4"	4"	1'-9"	2'-1"	1'-9"
9	1'-7"	6"	2'-0"	2'-6"	2'-0"
10	1'-10"	7"	2'-3"	2'-10"	2'-3"
11	2'-0"	7"	2'-6"	3'-1"	2'-6"
14	2'-7"	10"	3'-0"	3'-10"	3'-0"
18	3'-5"	1'-2"	4'-0"	5'-2"	4'-0"

Figure 1.1.13.1H

1.1.13.1 Reinforcement, General - (continued)

(11) <u>Welded Splices and Mechanical Connections</u>

Welding of A615, Grade 60 reinforcing steel is normally not permitted.

Welding of A706, A615, A82 and A496 for splices for column spiral reinforcing will be permitted. See Section 1.2.7.6 for comments.

Use approved mechanical splices for #14 and #18 vertical column bars. Stagger splices as shown below, to avoid adjacent bars being spliced in the same plane.

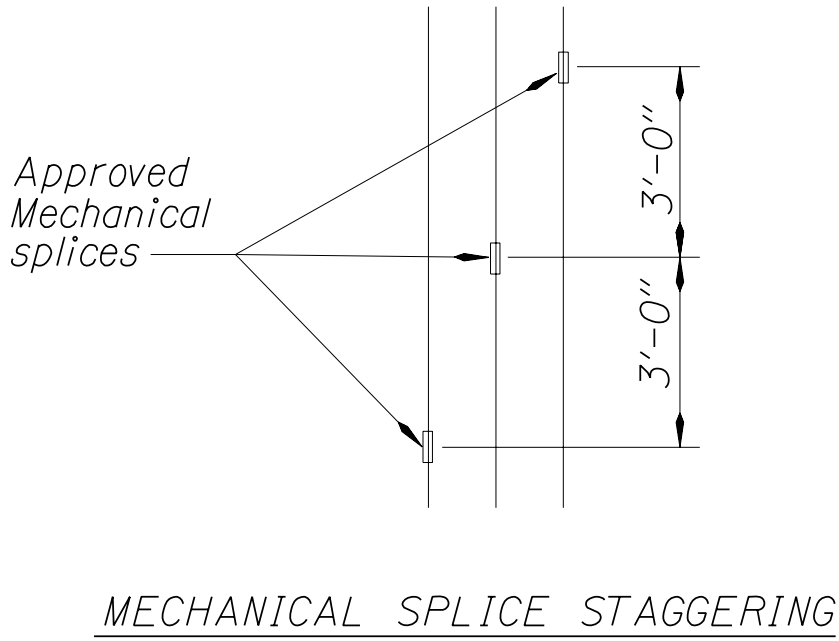

Figure 1.1.13.1I

Show lap splices on structure plans with the option of approved mechanical splices available to the contractor.

Special cases such as steel in back walls of abutments of post-tensioned concrete bridges and splicing reinforcement in existing structures may require the use of mechanical splices.

BACK

1.1.13.1 Reinforcement, General - (continued)

(12) *Lap Splices – GRADE 60

Ratio of A_s provided/ A_s required	Percent of A_s Spliced with Required Lap Length		
	50	75	100
≥ 2	A	A	B
< 2	B	C	C

* Class A splices (1.0 l_d)			
f 'c	3600 psi	4350 psi	5000 psi
# 3	1'-0"	1'-0"	1'-0"
# 4	1'-0"	1'-0"	1'-0"
# 5	1'-3"	1'-3"	1'-3"
# 6	1'-6"	1'-6"	1'-6"
# 7	2'-0"	1'-10"	1'-9"
# 8	2'-8"	2'-5"	2'-3"
# 9	3'-4"	3'-0"	2'-10"
# 10	4'-3"	3'-10"	3'-8"
# 11	5'-2"	4'-8"	4'-5"

* Note: Increase lengths 40% for epoxy coated bars.

* Class B splices (1.3 l_d)			
f 'c	3600 psi	4350 psi	5000 psi
# 3	1'-0"	1'-0"	1'-0"
# 4	1'-4"	1'-4"	1'-4"
# 5	1'-8"	1'-8"	1'-8"
# 6	2'-0"	2'-0"	2'-0"
# 7	2'-8"	2'-4"	2'-4"
# 8	3'-6"	3'-1"	2'-11"
# 9	4'-4"	3'-11"	3'-9"
# 10	5'-7	4'-11"	4'-8"
# 11	6'-9"	6'-1"	5'-9"

* Note: Increase lengths 40% for epoxy coated bars.

* Class C splices (1.7 l_d)			
f 'c	3600 psi	4350 psi	5000 psi
# 3	1'-4"	1'-4"	1'-4"
# 4	1'-9"	1'-9"	1'-9"
# 5	2'-2"	2'-2"	2'-2"
# 6	2'-7"	2'-7"	2'-7"
# 7	3'-5"	3'-1"	3'-0"
# 8	4'-7"	4'-0"	3'-10"
# 9	5'-8"	5'-1"	4'-10"
# 10	7'-4"	6'-6"	6'-2"
# 11	8'-10"	7'-11"	7'-6"

* Note: Increase lengths 40% for epoxy coated bars.

Figure 1.1.13.1J

BACK

1.1.13.1 Reinforcement, General - (continued)

(13) Development of Flexural Reinforcement

The added length, "X", is to provide for unanticipated loading conditions or shifting of the moment diagram due to shear cracking.

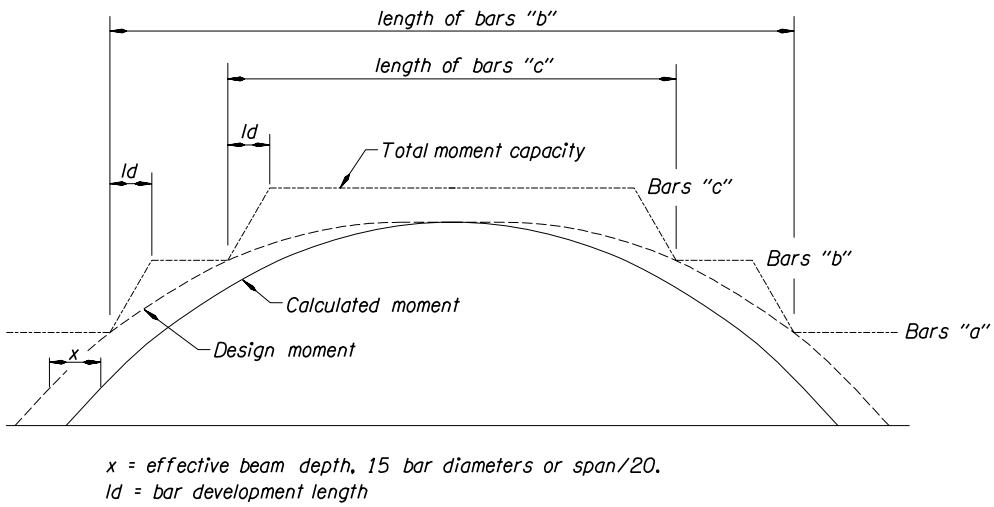

Figure 1.1.13.1K

(14) Distribution of Flexural Reinforcement

For moderate exposure conditions, use γ_e = 1.0. For severe exposure conditions such as structures subject to the effects of sea spray, deicing chemicals or other corrosive environments, use γ_e = 0.75. In decks, use γ_e = 1.0.

(15) Bundled Bars

Tie bundled bars with No. 9, or heavier, wire at 4'-0" maximum centers. Bundled #14 or #18 bars should not be used without the approval of the Supervisor.

When bundled bars are used in columns, the minimum clear distance between bundles is 2.5 times the diameter of the largest bar in a bundle.

Bundled bars preferably should not be used in bridge decks. If they are so used, increase the thickness of the deck by the diameter of the bar throughout the length where bundling is used

BACK

1.1.13.2 Bar Lengths

Use stock bar lengths whenever possible without sacrificing economy. Unless absolutely necessary, don't call for bars longer than 60 feet because they are difficult to handle and transport.

Bar Size	Stock Length *
#3	20' & 40'
#4 and #5	20', 30' & 40'
#6 thru #18	60'

* Only small quantities of #14 and #18 bars are stockpiled by the supplier because of size and weight and may require special mill orders.

Bar lengths specified include hook lengths unless detailed otherwise.

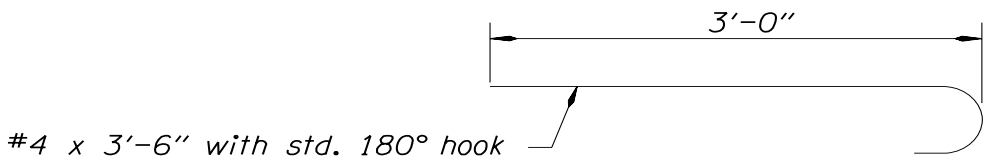

Figure 1.1.13.2A

BACK

1.1.13.3 Interim Reinforcement for T-Beams and Box Girders

When the deck slab of a continuous T-beam or box girder is placed after the concrete in the stem has taken its set, place at least 10 percent of the negative moment reinforcing steel full length of the longitudinal beam to prevent cracks from falsework settlement or deflection. In lieu of the above requirement, 2 - #8 bars full length of longitudinal girders may be used.

In concrete cross beams whose principal negative reinforcement lies in the deck slab, locate a portion of the negative reinforcement in the stem of the cross beam below the level of the deck slab construction joint. Provide sufficient ultimate reinforcement capacity to support 150 percent of the dead load of the crossbeam and superstructure 5 feet along the centerline of the structure either side of the center of bent. Use no less than 10 percent of the total negative reinforcement.

In cases where the bent cross beams are skewed to the deck steel, place the top cross beam steel in the top of the stem below the deck (dropped panel). See the following page for typical details.

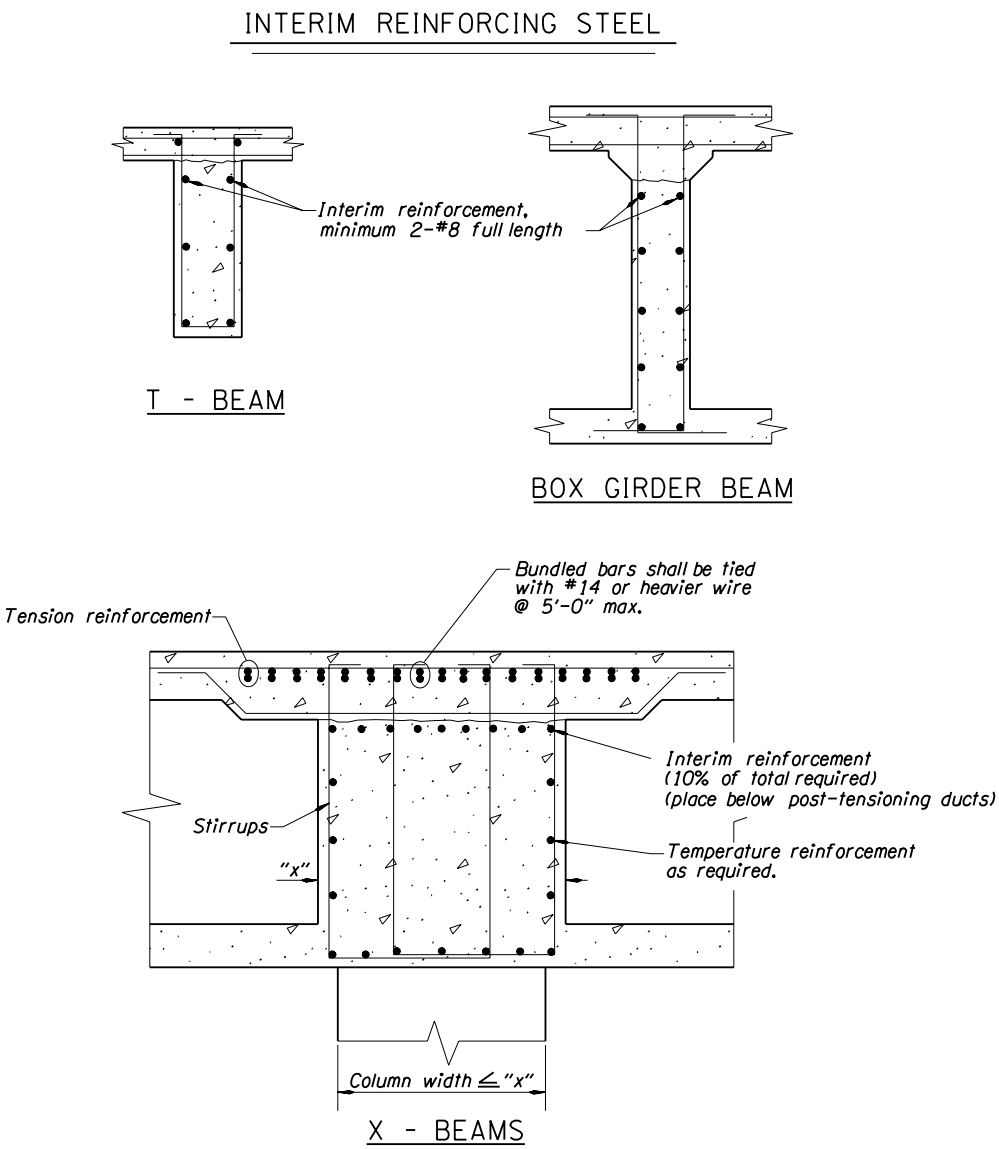

Figure 1.1.13.3A

1.1.13.4 Additional Shear Reinforcement

As shown below, provide additional reinforcement to the calculated shear reinforcement in cantilevered portions of cross beams. Pay careful attention to clearances and possible conflicts with post-tensioning ducts and other reinforcement. Detail the size and number of bars to provide at least 20% of the factored Strength I Limit State shear demand at the face of the column. Apply this provision to cantilevered sections of cross beams when the cross beam cantilever from the face of the column exceeds the cross beam depth at the face of the column. This additional reinforcement may be omitted if the shear reinforcement provided from the critical shear section to the face of column provides 20% additional capacity above the controlling strength limit state.

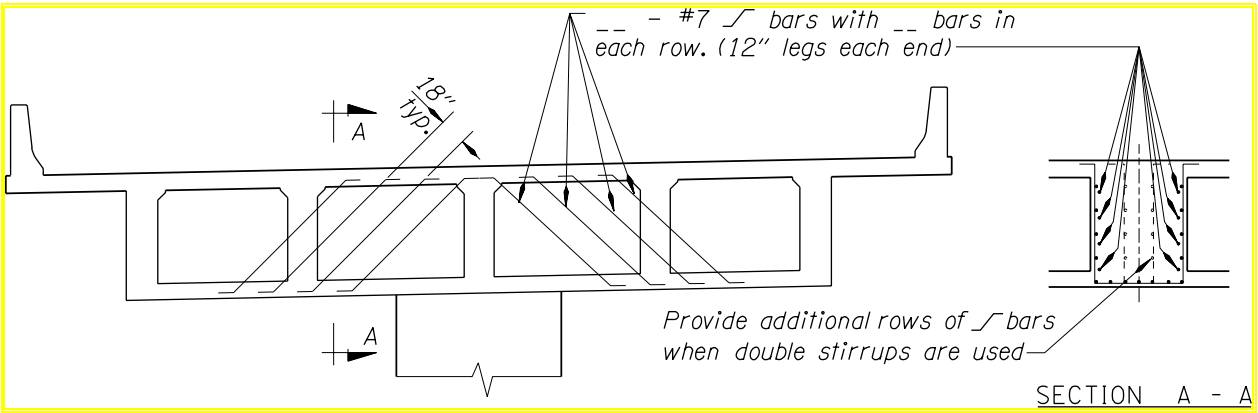

Figure 1.1.13.4A

1.1.13.5 Diaphragm Beam Steel

The detail below assumes the deck reinforcement is stopped 6 in. clear of the transverse beams. The added bars provide reinforcement for Beam-D and the deck overhang. If straight bars are used, the spacing of the deck steel will be continuous over the transverse beams and no additional bars will be required.

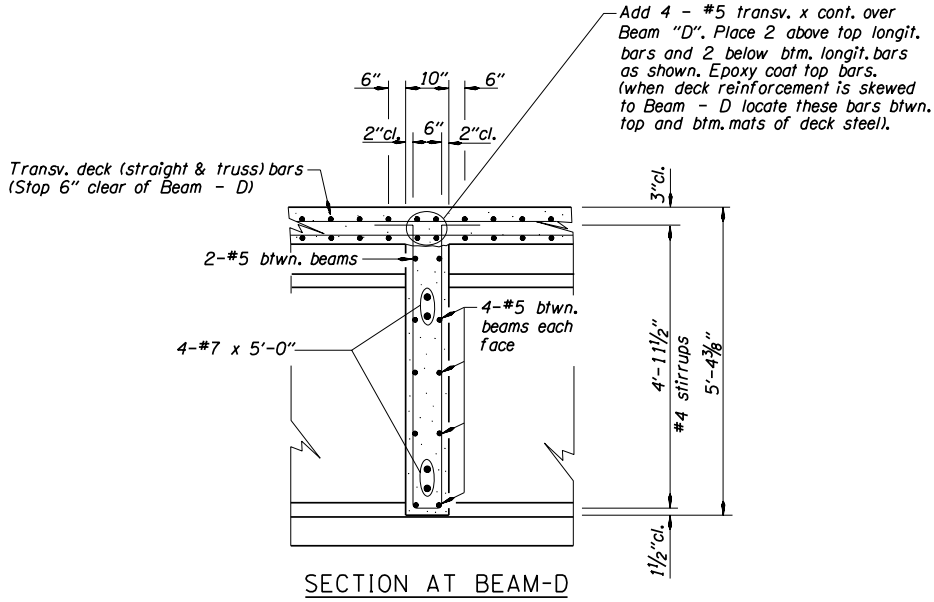

Figure 1.1.13.5A

1.1.13.6 Additional Shear Reinforcement in Longitudinal Girders - DELETED

1.1.14 Precast Prestressed Concrete Elements

1.1.14.1 Design of Precast Prestressed Elements

The nature of precast prestressed elements requires special handling in several areas.

- Design – General
  - Each precast prestressed element is to be designed job specific.
  - Deck requirements – Interstate routes and routes with 20-year projected ADTT > 1000.
    - **Side-by-side slabs and box beams** – 5" minimum HPC thickness with a single mat of reinforcement (8" maximum centers each way). 7" minimum thickness for any portions overhanging the exterior slab or box beam.
    - **Side-by-side Bulb-T and deck Bulb-T girders** – 7¼" minimum HPC thickness with two mats of reinforcement (8" maximum centers in each mat and each direction). Because of this requirement, deck Bulb-T girders will generally be used only on low-volume routes.
    - **Spread slabs and box beams** – 7¼" minimum HPC thickness with two mats of reinforcement (8" maximum centers in each mat and each direction).
    - **Bulb-T (not side-by-side) and Bulb-I girders** – 8" minimum HPC thickness (see 1.1.20.1).
  - Deck requirements for non-interstate routes and routes with 20-year projected ADTT < 1000.
    - **Side-by-side slabs and box beams** – 2" minimum asphalt concrete wearing surface with membrane waterproofing or 5" minimum HPC thickness as specified above.
    - **Side-by-side Bulb-T and deck Bulb-T girders** – 2" minimum asphalt concrete wearing surface with membrane waterproofing or 7¼" minimum HPC thickness as specified above.
    - **Spread slabs and box beams** – 7¼" minimum HPC thickness with two mats of reinforcement (8" maximum centers each way).
    - **Bulb-T (not side-by-side) and Bulb-I girders** – 8" minimum HPC thickness (see 1.1.20.1).
  - HPC decks must be cast-in-place.

Note: ADTT = ADT x %trucks. The 20-year ADT volume should be in the project prospectus. The %trucks can be determined by locating the nearest Permanent Automatic Traffic Recorder (ATR) station. This information is kept by the Transportation Data Section under the Transportation Development Division and can be found at the following website:

http://egov.oregon.gov/ODOT/TD/TDATA/tsm/tvt.shtml

From this website, go to "Permanent Automatic Traffic Recorder Stations (ATR's) Trend Summaries" and select the latest year.

If a prospectus is not available, if the 20-year ADT is not shown and/or if an appropriate ATR cannot be found, contact the Project Leader or Contract Administrator.

BACK

1.1.14.1 Design of Precast Prestressed Elements - (continued)

- Concrete Strength – Concrete design compressive strengths should not be higher than actual design requirements. List the required concrete strengths in the General Notes.

- The allowable range of design comprehensive strengths of concrete at 28 days (f'_c) to be used are:

	Minimum	Maximum
for precast, prestressed slabs and box beams	4350 psi	7000 psi
for precast, prestressed girders, and integral deck girders	5000 psi	9000 psi

  When precast, prestressed members are used without a cast-in-place deck, the 28-day compressive strength is limited to 6000 psi. This limitation is required to ensure adequate air entrainment and to ensure adequate workability. Higher strength concretes generally are less workable and therefore are more difficult to achieve an acceptable finish suitable for a riding surface. If a separate concrete mix (6000 psi or less) is used for the top flange, then higher strengths (up to 9000 psi) may be used for the remainder of the member.

- The allowable range of design compressive strengths of concrete at release of prestress (f'_c) to be used are:

	Minimum	Maximum
all precast, prestressed members	4000 psi	7000 psi

- Do not exceed the compressive strengths listed above without an approved exception from the State Bridge Engineer.

- Concrete Tensile Stress Limits:
  - 3 * sqrt(f'c), where f'c is in psi.

  - Modify AASHTO LRFD Table 5.9.4.1.2-1 as follows:
    - Modify last (9th) bullet to 0.0948 * sqrt(f'c), where f'c is in ksi.
    - "No Tension" criteria in 6th and 8th bullets still apply.

  - Modify AASHTO LRFD Table 5.9.4.2.2-1 as follows:
    - Modify first and last (8th) bullet to 0.0948 * sqrt(f'c), where f'c is in ksi.
    - "No tension" criteria in 3rd, 5th and 7th bullets still apply.

  - Simple-Span Girders Made Continuous for Live Load – When precast girders are made continuous for live load, design the positive moment area as if the girder was simply-supported. A maximum concrete tensile stress up to 6*sqrt(f'c) in the positive moment area will be allowed for this condition. Also ensure that the maximum concrete tensile stress in the positive moment area does not exceed 3*sqrt(f'c) when the girder is considered continuous for live load.

- Prestress Losses – Calculate prestress losses in precast members using either the "Detailed" or "Approximate" method per NCHRP Project No. 18-07 or the methods given in the LRFD Specifications. Obtain a copy of the report from the

BACK

1.1.14.1 Design of Precast Prestressed Elements - (continued)

Transportation Research Board before attempting to use the NCHRP methods. The NCHRP methods have been approved by AASHTO and will be included in the next interim update to the LRFD Bridge Design Specifications.

Do not include the prestress gain due to application of live load in the total long-term loss calculation.

An Excel spreadsheet for calculating prestress losses using the NCHRP 18-07 methods is available from the Bridge Engineering Section.

The preferred method of calculating prestress losses is the "Detailed" method per NCHRP 18-07. Prestress loss estimates by past ODOT bridge designers have generally been in the 35 to 45 ksi range. Therefore, the NCHRP 18-07 loss calculations appear to be consistent with earlier loss predictions. And these loss levels have resulted in relatively accurate predictions of camber at the time of deck placement. There has also been no record of service cracking in bridges designed with these prestress loss levels.

Prestress gain due to application of live load can be more than 20% of the total prestress loss. ODOT's policy of not including this gain results in a conservative estimate of final girder stresses. Because of this, an accurate estimate of prestress losses is preferred rather than a conservative estimate. Note also that prestress loss affects girder stress, but does not change the ultimate strength or capacity to carry permit loads.

Transforming the prestressing strand to increase section properties is not recommended. The Eriksson PSBEAM program allows this to be done by simply checking a toggle. As stated in NCHRP 18-07, prestress losses should be calculated differently (no elastic losses or gains) when transformed properties are used for the prestressing strand. If so, the final girder stresses will be approximately the same whether gross or transformed section properties are used. Therefore, there is no significant advantage in using transformed section properties.

- Detailing – General
  - Camber - See Section 1.1.17 for special requirements pertaining to ACWS, sidewalk, and rail requirements.
  - Deck Drainage - See Section 1.1.20.3 for details specific to slab and box beam elements.
  - Girder Storage and Shipment - See Standard Specifications section 00550.51 prohibits transportation before 7 days and only after the 28-day compressive strength has been achieved. There may be special construction circumstances when a member needs to be transported and placed before the 7 days, but it should not be allowed before the 28-day compressive strength has been achieved.

    Delaying transportation and placement of the member beyond the 7 days should be specified only if absolutely required by design. A longer placement delay would be appropriate, if the design required additional long-term shrinkage and creep to have occurred prior to fixing or encasing the beam ends.

BACK

1.1.14.1 Design of Precast Prestressed Elements - (continued)

- Skews - skews are usually limited to 45 degrees. Excessively skewed slabs tend to warp more, making fit and obtaining uniform bearing on the bearing pads more difficult. Stair stepping the bearing pads may be necessary to obtain uniform bearing.

- Joint and Keyway details - see standard drawings for recommended details.

- See Appendix 1 Figures for other typical details.

1.1.14.2 Design and Detailing of Precast Prestressed Beams

(1) Stay-in-Place Forms – Where the spacing between edges of precast concrete girder flanges is no greater than 2 ft, steel stay-in-place deck forms may be used. However, do not use stay-in-place forms in exterior bays.

Steel stay-in-place deck forms may also be used behind end beams where the deck is continuous over interior bents. Hot-dip galvanize all steel stay-in-place forms.

If stay-in-place deck forms are allowed, provide a minimum section modulus of 0.15 in^3 per ft and a maximum form height of 1.5". Install stay-in-place forms such that the top of the form is at the design bottom of deck thickness. The weight of a form meeting these requirements is likely to be less than 2 psf. This weight is not significant and need not be included in the design. However, add 10 psf additional non-composite dead load in the girder design to account for extra concrete weight.

Do not use stay-in-place forms at deck overhang areas or where the edges of girder flanges are greater than 2 ft apart. In such cases, access for inspection and future maintenance of the deck precludes the use of stay-in-place deck forms.

Do not use stay-in-place forms in coastal areas.

These provisions apply to precast girders, slabs and boxes.

Where stay-in-place forms are considered, add the following statement with the loading section of the general notes:

"Stay-in-place deck forms may be used except for exterior overhangs and between the exterior girder and the first interior girder on each side of the structure. XX psf additional non-composite dead load has been included in the girder design to account for extra concrete and form weight associated with stay-in-place forms."

BACK

1.1.14.2 Design and Detailing of Precast Prestressed Beams - (continued)

(2) Diaphragm Beam Restraint:

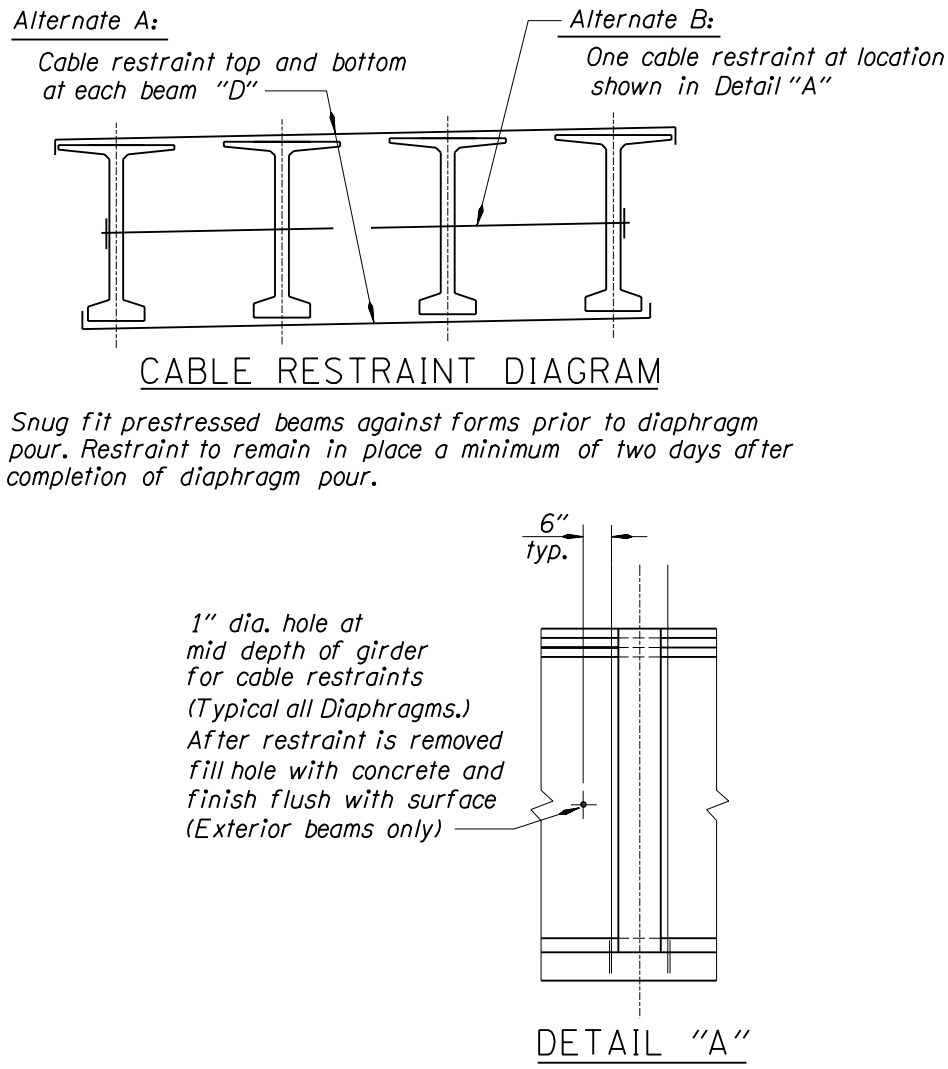

Figure 1.1.14.2A

(3) Beam Seat or Top of Crossbeam Elevation - A note on the plans should indicate if the beam seat (or top of crossbeam) elevations shown are for deck buildups based on three months camber. Adjust the beam seat (or top of crossbeam) elevations during construction to correct for the revised deck buildups.

BACK

1.1.14.2 Design and Detailing of Precast Prestressed Beams - (continued)

(4) Continuous Deck Reinforcement - Provide additional deck reinforcement for bridges composed of precast simple span elements with continuous deck as shown below. This detail does not apply to bridges made continuous for live load. When girders are made continuous for live load, the deck reinforcement must resist the negative moments generated. The result will be substantially more deck steel than the detail below. NCHRP Report 519 provides design examples for girders made continuous.

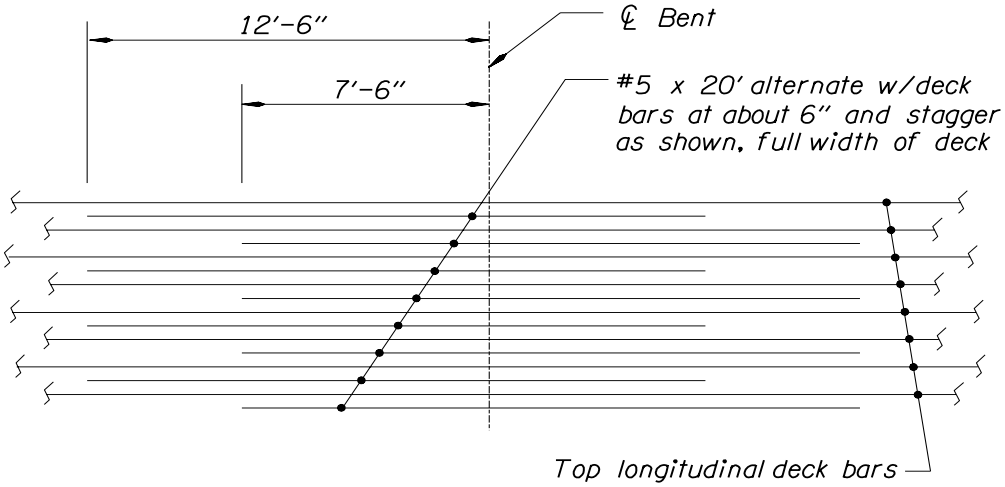

INTERIOR BENT WITH CONTINUOUS DECK

Figure 1.1.14.2B

(5) Beam Stirrups - Bulb-T and Bulb-I standard drawings show stirrups with 90^0 shop bent hooks at the top of the girder. These hooks must protrude at least 3 in. above the bottom of the deck. If they do not, because of excessive build-up, the standard drawing requires the use of "U" bars to fill the gap.

There is no need for the stirrup hooks or "U" bars to extend to the top mat of deck reinforcement, as has been shown in the past. Details on the plans should reflect these requirements.

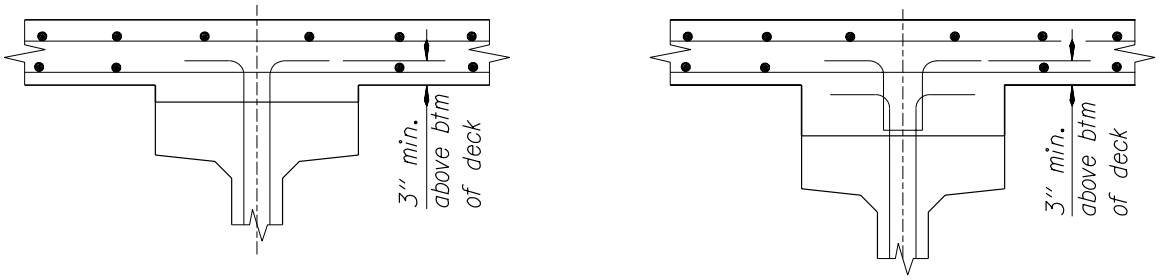

Figure 1.1.14.2C

1.1.14.2 Design and Detailing of Precast Prestressed Beams - (continued)

(6) Structure Widenings, Precast Beam Bridges - Detail connections between superstructures to prevent widening dead loads from being transferred to the existing beams. This may be accomplished by delaying the connection pour (diaphragm and deck) until most of the dead load is applied to the widening. The designer chooses the appropriate placement method.

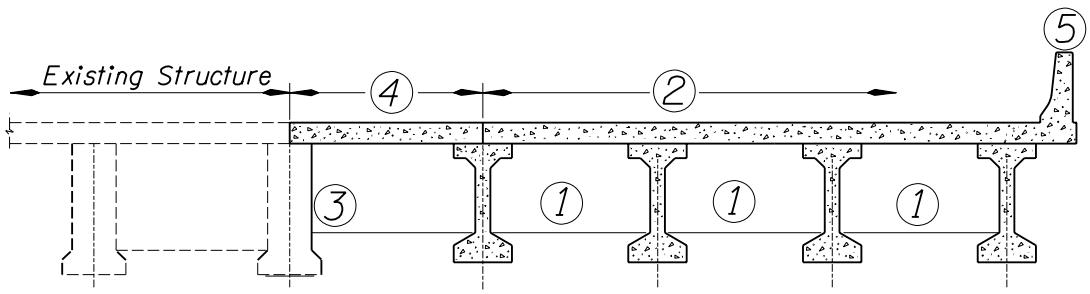

CLOSURE POUR METHOD

POUR SCHEDULE
(INCLUDING CLOSURE POUR)

1. Make pour in diaphragms
2. Make pour in deck slab. Delay pour 2 a min. of 3 days after pour 1.
3. Make pour in diaphragm of closure pour section.
4. Make pour in deck slab of closure pour. Delay a minimum of 3 days after pour 3.
5. Make pour in bridge rail.

Figure 1.1.14.2D

Note: In the above closure pour method, the deck screed machine would normally be placed or supported on the widening beams. As the concrete is placed, the beams tend to deflect equally. This equal deflection normally gives better control of deck thickness and deck steel cover.

BACK

1.1.14.2 Design and Detailing of Precast Prestressed Beams - (continued)

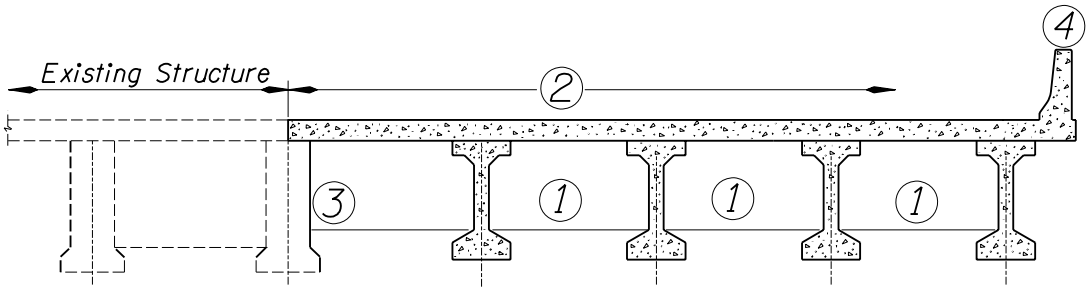

DELAYED DIAPHRAGM POUR METHOD

POUR SCHEDULE

1. Make pour in diaphragms
2. Make pour in deck slab. Delay pour 2 a min. of 3 days after pour 1. Blockout deck as required to make pour 3.
3. Make pour in diaphragm closure a minimum of 3 days after pour 2.
4. Make pour in bridge rail.

Figure 1.1.14.2E

Note: In the above delayed diaphragm pour method, the deck screed machine rails would normally be placed or supported with one rail on the existing structure and one rail on the widening beams. As the concrete is placed, the new beams would tend to deflect more than the existing composite beams. This unequal deflection makes it more difficult to control deck thickness and deck steel cover, especially at the new beam adjacent to the existing structure.

(7) Deck Pour Sequence - Placement of decks on precast prestressed beams should take place no less than 60 days after stress transfer. This is to allow a majority of the prestress camber to occur, thus enabling more accurate determination of beam build-up for the deck screeding.

(8) Diaphragm Beams - Use concrete diaphragm beams at span ends and at midspan. Install temporary diaphragms midway between the end and midspan diaphragm beams before pouring the end and midspan diaphragm beams. Temporary beams may be removed after removing the deck overhang brackets.

(9) Earthquake Restraint Details - See cost data books for sample plans and details.

(10) Fixed Girder Connections - Where girder ends are designed with a fixed connection to an end beam or bent cap, embed the girder into the end beam (or bent cap) a minimum of 8 inches. Provide transverse bars/rods through the girder ends as shown on the standard drawings (BR300 & BR310). In addition to the above requirements, provide strand extensions and/or dowels at the end of the girder as needed to ensure adequate transfer of loads to the substructure.

BACK

1.1.15 Cast-In-Place Superstructure

1.1.15.1 General Design

(1) **Structure Depths**

See 1.1.2.3(2) for minimum depth and live load deflection requirements.

(2) **Computations of Deflections**

Base computed deflections on the effective moment of inertia of the section.

Estimate long-term deflections as instantaneous deflection times a factor of 3 for reinforced concrete elements.

1.1.15.2 Interim Reinforcement for T-Beams

Refer to Section 1.1.13.3.

1.1.15.3 Diaphragm Beam Steel

Refer to Section 1.1.13.5.

1.1.15.4 Box Girder Stem Flare

Taper changes in girder stem thickness for a minimum distance of 12 times the difference in stem thickness. See Standard Drawing BR130 for details.

BACK

1.1.15.5 Shear Keys and Construction Joints

Normally, shear keys at construction joints are unnecessary. Show construction joints with a roughened surface finish unless shear keys are required and shown on the plans.

At construction joints between the stem and slab of concrete girder bridges, use the following note:

Roughened surface finish. See 00540.43(a) in the Standard Specifications.

1.1.15.6 Access Holes

Access may require using manholes and/or access holes through bottom slabs, diaphragm beams, crossbeams and longitudinal beams. See Standard Drawings BR135 and BR136 for details.

Avoid placing access holes through the deck of a structure. There is a potential for the access hole cover to leak. Disruption of traffic and the need for traffic protection and direction should be avoided.

In addition to the standard drawing for Access Holes, draw a section on the plans normal to the girder through the access hole showing the relationship of the longitudinal stems, utility lines, and crawl holes to the access hole and ladder. If the drawing is to scale, dimensions need not be shown. See Section 1.4.4 for access requirements.

BACK

1.1.15.7 Bottom Slab Details

Generally, show the bottom slab of box girders to be parallel to the top slab in transverse section so that all girder stems will be the same depth.

The thickness of the bottom slab should not be less than 6”.

Place a 4” x 4” drain hole through each diaphragm beam at the low point of each cell. Place a 4” diameter drain hole through the bottom slab at the low point of each series of cells in a span. For cells that carry water lines, increase 4” diameter to 6” diameter.

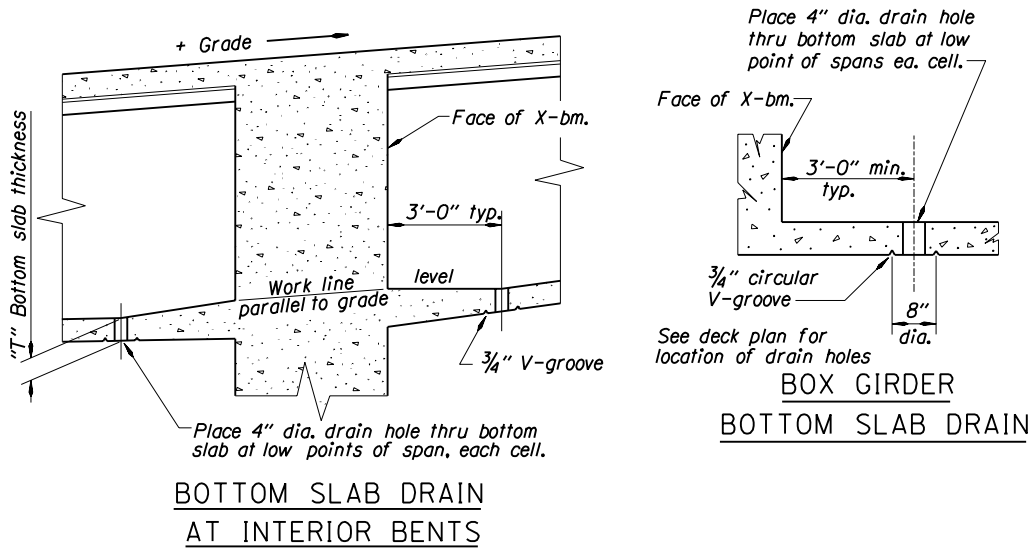

Figure 1.1.15.7A

1.1.15.8 Cross Beams

Refer to Section 1.1.13.3 and1.1.13.4.

1.1.15.9 Fillets

Provide adequate fillets at the intersections of all surfaces within the cell of a box girder, except at the junction of web and bottom flange where none are required.

BACK

1.1.15.10 Structure Widenings, Cast-in-Place Superstructures

Connections between superstructures should be detailed to prevent widening dead loads from being transferred to the existing beams. One method is to temporarily support the beam adjacent to the widening during construction. Designate locations where supports are required and expected maximum reactions. An alternate method requires closure pours for the diaphragm and deck slab.

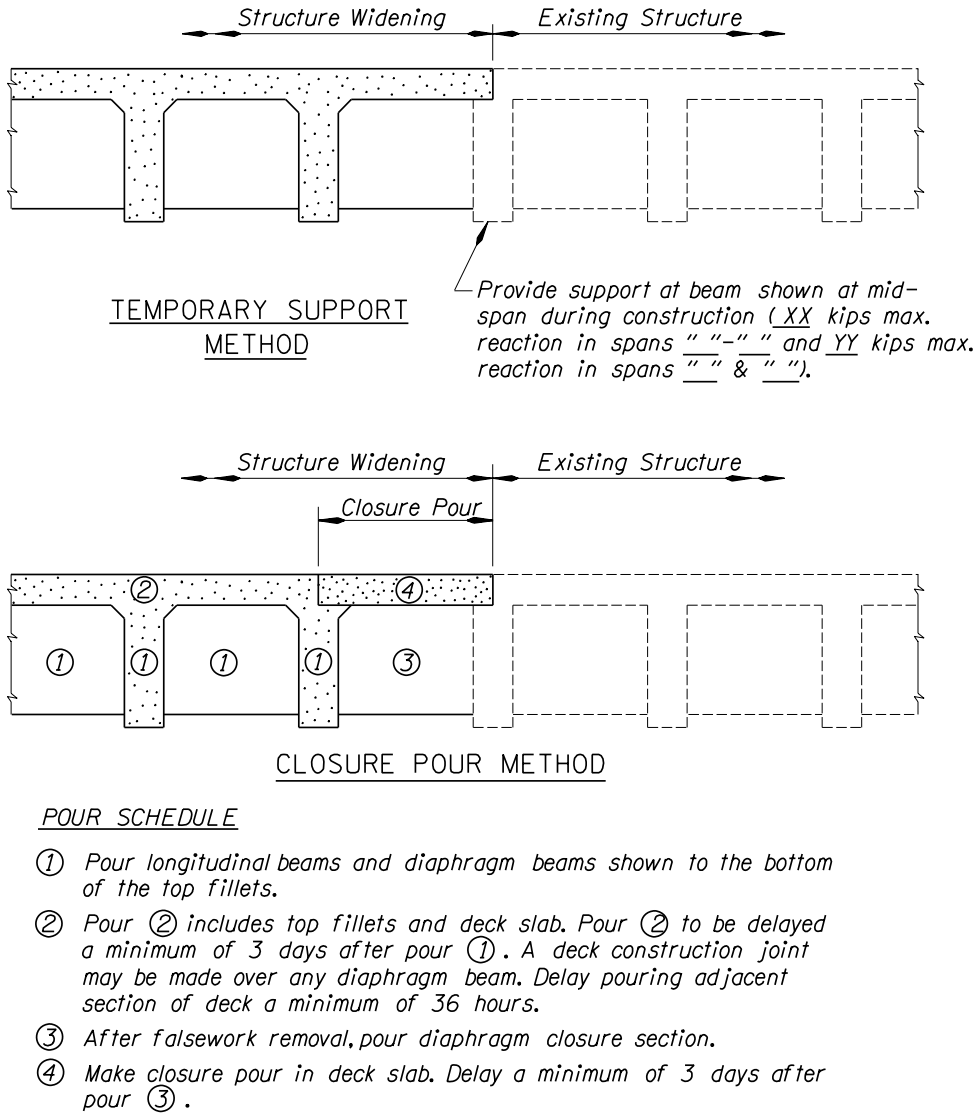

Figure 1.1.15.10A

1.1.15.11 Stay-in-Place Forms for Deck

For deck construction, stay-in-place forms will not be allowed. Loss of access for inspection and future maintenance of the deck preclude the use of stay-in-place deck forms.

BACK

1.1.16 Post-Tensioned Structures

1.1.16.1 General Design

(1) Structure Depths

See 1.1.2.3(2) for minimum depth and live load deflection requirements.

(2) Shrinkage and Creep Stresses

The stresses in the superstructure and substructure of post-tensioned concrete bridges which result from elastic shortening may be assumed to remain in the structure indefinitely. The stresses which might be assumed to develop as the result of shrinkage and creep may be assumed to be relieved by creep.

(3) Shortening of Post-Tensioned Bridges

The following values for shortening of post-tensioned, cast-in-place concrete bridges are based on field measurements by the ODOT Bridge Section. Compare the design values with the field measured values and use the more conservative value.

Shrinkage prior to tensioning (theoretical)

0.4 x .0002 ft/ft x 12 in/ft x 100 ft =	0.10”/100’
Elastic shortening	0.44”/100’
Shrinkage and creep after tensioning to 1 year	0.29”/100’
Shrinkage and creep 1 year to 20 years (anticipated)	0.10”/100’

These structures were stressed to an average concrete stress of 1200 psi (1000 to 1300 psi). For other values, the elastic shortening and creep should be roughly proportional. Our data indicates that variation of these values by 50 percent would not be unusual.

(4) Deflections

Estimate long-term deflections as the net instantaneous deflection (DL + Prestress) times a factor of two for cast-in-place post-tensioned elements.

(5) Curved Post-Tensioned Ducts

Design for the radial prestress forces resulting from curved tendons in post-tensioned structures. Additional shear/flexural reinforcement may be required to resist the lateral web forces and ties to resist the web bursting forces.

BACK

1.1.16.1 General Design - (continued)

(6) Design Moments at Interior Bents of Post-Tensioned Bridges

For crossbeams with widths less than the distance between the top and bottom slab, do not include the crossbeam in the superstructure section properties. Project the stem and slab dimensions to the centerline of the bent and use those dimensions to calculate section properties. Use the negative moment at the bent centerline for design.

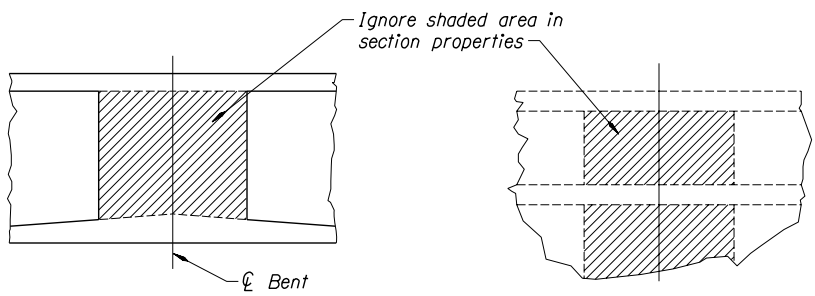

Figure 1.1.16.1A

For greater crossbeam widths, use the above section properties and consider adding supplementary reinforcing steel across the top of the crossbeam to control any theoretical cracking that may occur from live loading.

(7) Skewed Box Girders

Box girder bridges with skews of over 20^0 cannot be safely designed without taking into account the effects of skew. These effects generally increase as any of the following increase: skew angle, span length, torsional rigidity of the superstructure. The principal effect of skew is to increase the reactions at the obtuse corner of the structure and to reduce those at the acute corners (sometimes even causing uplift). This increases shear in the beams adjacent to the obtuse corners and produces transverse shear in the deck and bottom slab. These effects can be reduced by reducing the skew, which generally means lengthening the structure and/or by placing cross beams at interior bents normal to the centerline of the structure.

When torsion due to skew is a problem, consideration should be given to reducing the torsional stiffness of the structure. RCDG bridges, either cast-in-place or with precast girders, are torsionally limber.

Do not design box girder bridges with bents skewed more than 45^0 from the normal to the structure centerline.

Careful design of post-tensioning with regard to the deflection and slope of the girder at a skewed end can nullify or reverse the tendency of the obtuse corner of the skewed structure to take a disproportionate part of the dead load. Theoretically, this could be done so that under full DL+LL+I, the reactions would be equal at all bearings. Even an approximation of this condition will benefit the design.

BACK

1.1.16.1 General Design - (continued)

(8) Concrete Tensile Stress Limits

The concrete tensile stress limits given in 1.1.14.1 also apply to post-tensioned members.

1.1.16.2 General Details

Details and practices stated in Section 1.1.15 generally apply to post-tensioned box girders as well as conventional box girders.

(1) Conventional Box Girders

See Standard Drawings BR125 and BR130 for general details.

(2) Precast Trapezoidal Box Girders

See Standard Drawings BR131, BR132, BR133 and BR134 for general details.

(3) Access and Ventilation

See Standard Drawings BR135 and BR136 for general details.

BACK

1.1.16.3 Post-Tensioned Deck Overhangs

Place post-tensioning ducts and deck reinforcement normal to the centerline of the structure.

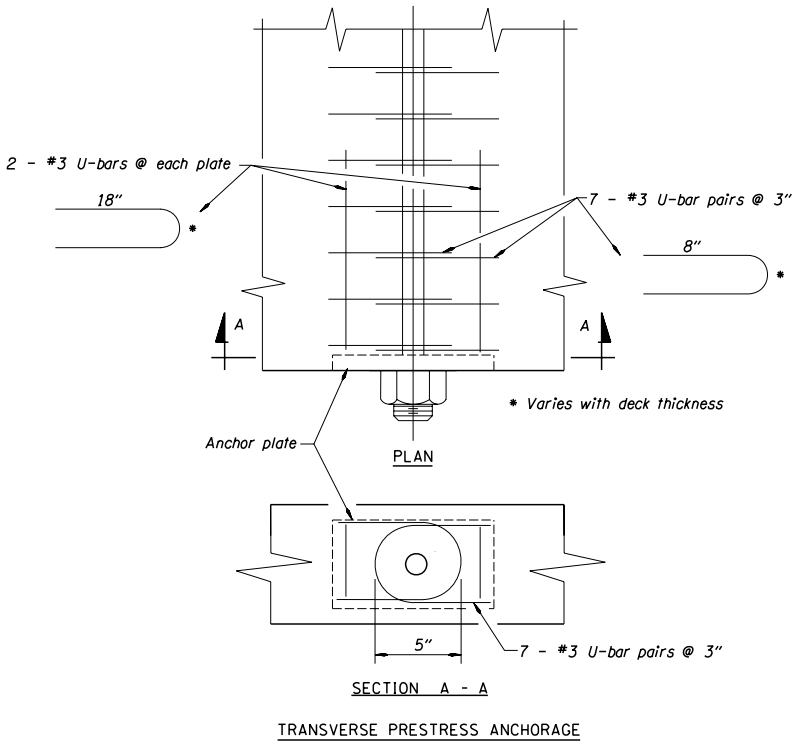

Figure 1.1.16.3A

1.1.16.4 Stress Rod Reinforcement of Bearing Seats

A recent example of a stress-rod reinforced bearing seat is shown below. In order to retain a significant amount of prestressing force, the stressed length of the rod should be not less than 10 feet.

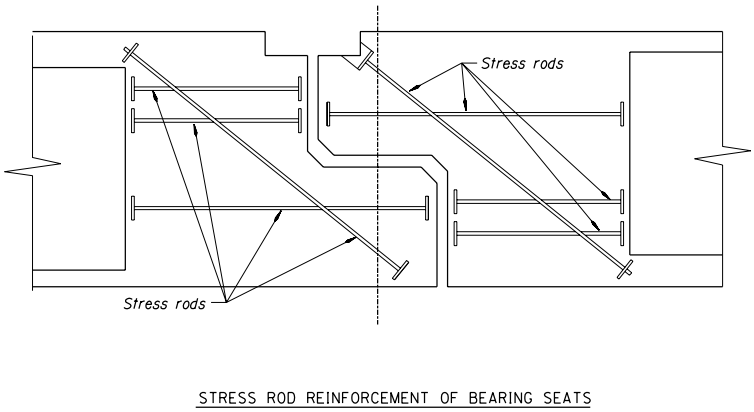

Figure 1.1.16.4A

1.1.16.5 Segmental Construction

Where precast and cast-in-place concrete elements are joined in a continuous, segmental structure, chamfer the exterior corners of the cast-in-place portion to match the precast elements. It is standard practice to chamfer precast elements, even though the chamfer may not be shown on our drawings or the shop drawings.

1.1.16.6 Support Tower Details and Notes

Design the support tower at the end of the suspended span to support the reaction from the suspended span including the additional reaction due to post-tensioning. Show on the plans the approximate total reaction is kips. Design the tower to accommodate the elastic shortening of the superstructure due to post-tensioning. Make provisions so that the superstructure may be returned to the plan elevation (raised or lowered) in the event that actual settlement at the top of the tower differs from the anticipated settlement. Keep the support tower in place until the suspended span is fully supported by the cantilever and adjoining span.

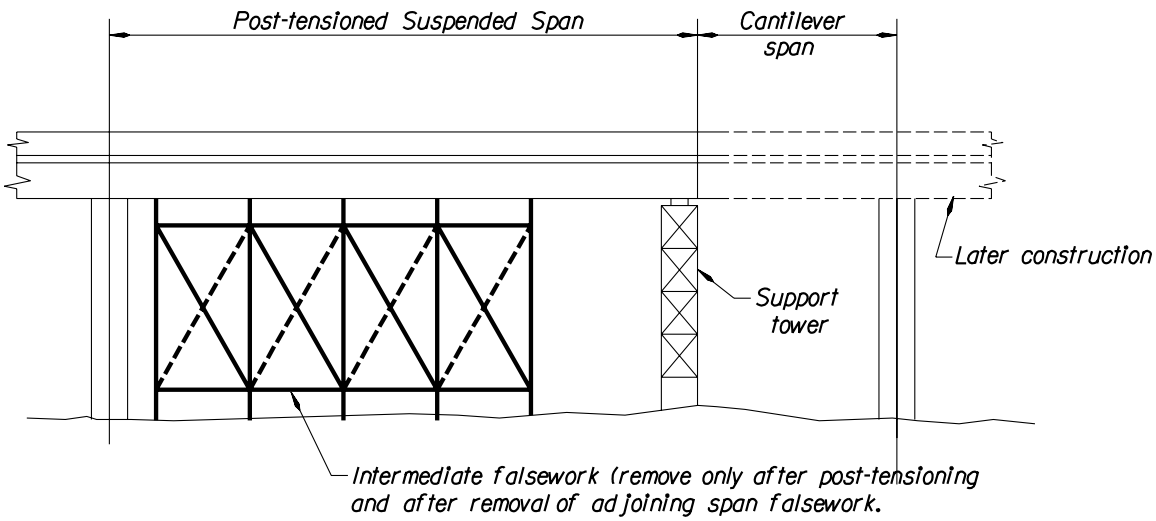

Figure 1.1.16.6A

1.1.16.7 Reinforcement of Deck Overhangs

In order to prevent cracking at the end of post-tensioned spans, extend the end diaphragm beam to the edge of the deck or provide additional diagonal deck reinforcement similar to shown below.

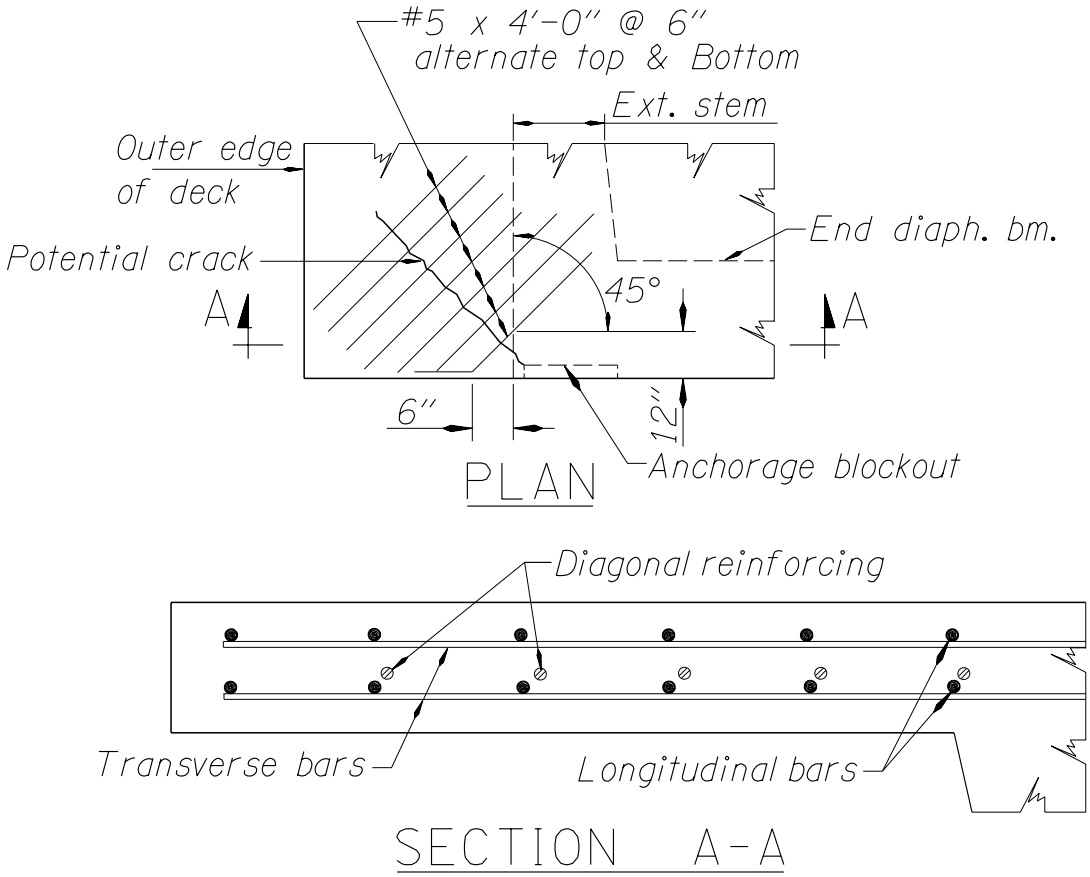

Figure 1.1.16.7A

1.1.16.8 Post-Tension Strand Duct Placement

The detailing of post-tensioned box girders should allow pouring the bottom slab and stems as separate pours. The design of the prestressed tendon path should be such that the ducts do not fall in the area of the bottom slab. See Standard Drawing BR125 and BR130 for general details. To ensure the ducts are fully encased in concrete, avoid locating ducts in the bottom slab and avoid crossing construction joints near the top slabs. Show the following details on the project plans if needed:

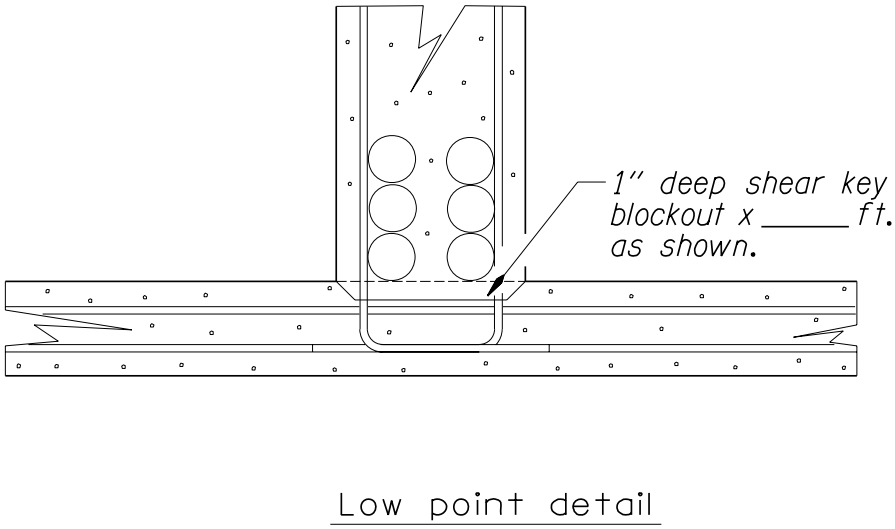

Figure 1.1.16.8A

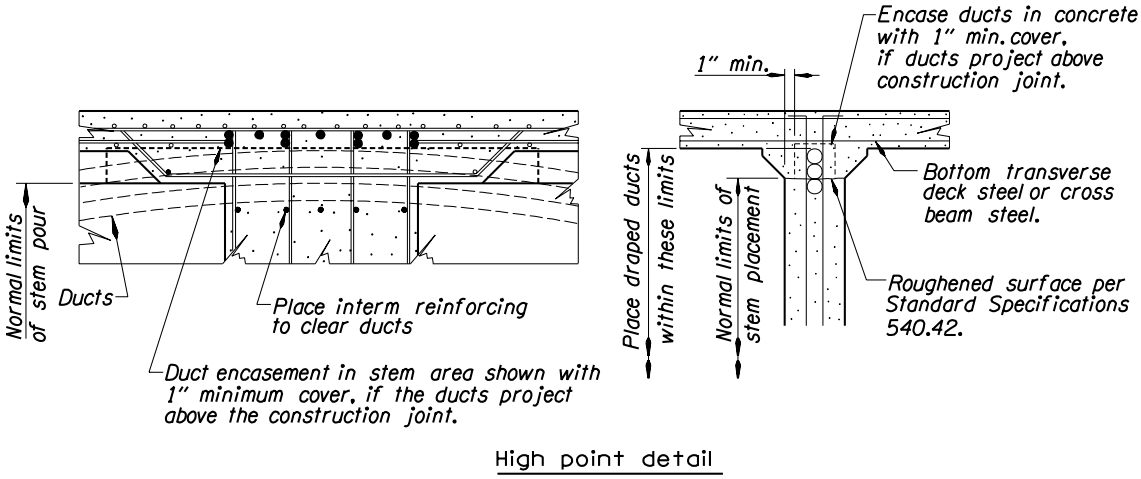

Figure 1.1.16.8B

BACK

1.1.17 Camber Diagrams

1.1.17.1 Camber Diagrams, General

Show camber diagrams on the plans for all types of cast-in-place concrete structures. The camber diagram shall be titled, "Dead Load Camber Diagram" and be accompanied by the applicable portions of the following note:

> Camber is designed to compensate for deflection due to prestressing, the dead load of all concrete, stay-in-place forms and wearing surface and the long-term effects of shrinkage and creep.

An example of a camber diagram for a cast-in-place structure is shown below.

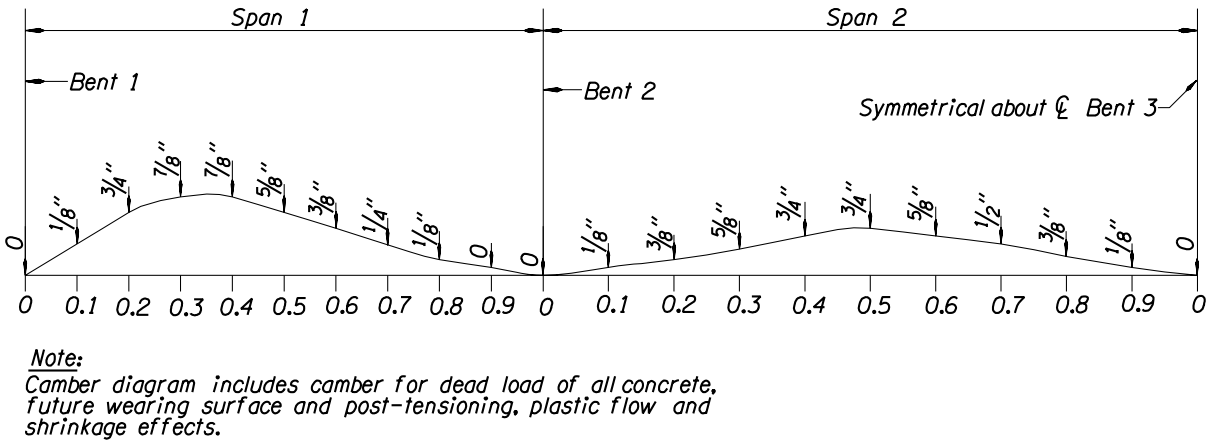

Figure 1.1.17.1A

BACK

1.1.17.2 Precast Slabs and Box Beams

Camber of precast elements has increased in recent years due to higher strand forces. Top of slab elevations should reflect allowances for camber and grade correction. Rail posts lengths and curb heights will have to be increased accordingly near the ends to obtain the proper finish rail height and curb exposure. Note on the Typical Deck Section that post lengths may vary due to camber and/or superelevation. Include information on the contract plans as follows:

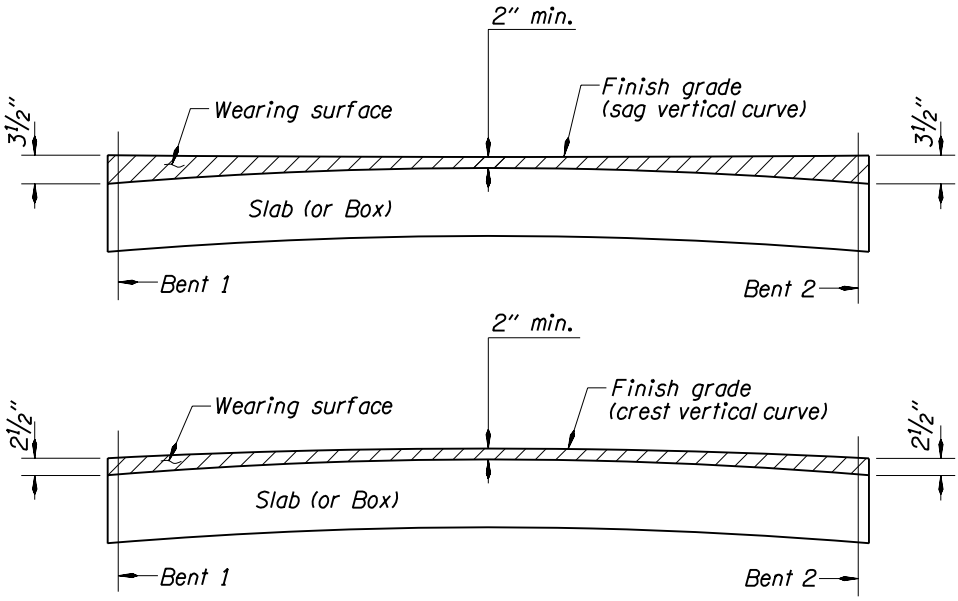

Figure 1.1.17.2A

1.1.17.3 Precast beams – See Standard Drawings BR305 and BR315 for required dimensions

1.1.18 Pour Schedules

1.1.18.1 Pour Schedules, General

In order to avoid misunderstanding and claims by the contractor, take care to make sure that construction sequences and pouring schedules are clearly described. Particular care is needed if symmetrical structures are covered by sketches showing half of the structure.

In general, longitudinal pours in continuous spans are stopped near the bents to allow concrete shrinkage to occur in the majority of the span. Closure pours over the bent are generally shorter to minimize shrinkage cracking that could occur between fixed supports or placements.

Bottom slab or beam construction joints should be made at a falsework bent rather than a permanent bent. Cracking may develop at a permanent bent, if the adjacent falsework settles or deflects during the concrete placement.

1.1.18.2 T-Beams Supported on Falsework

A typical sketch and pour sequence is shown below.

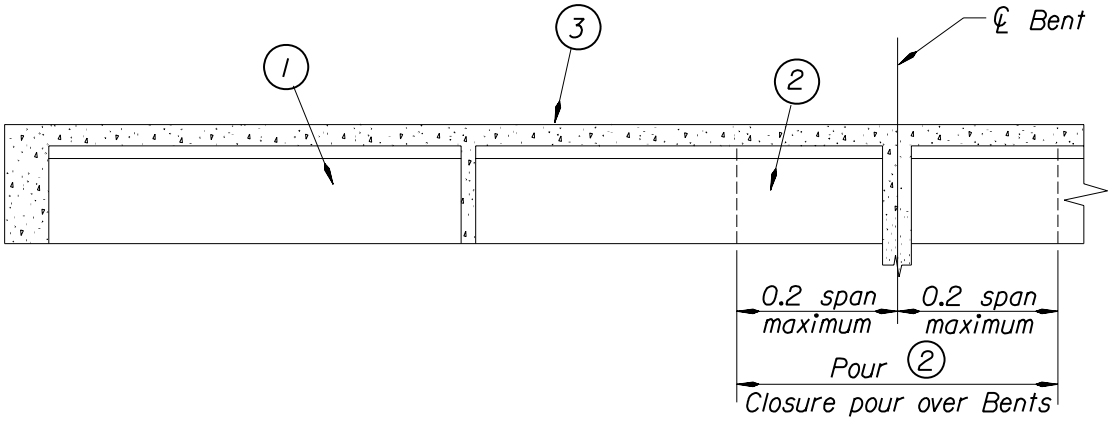

Figure 1.1.18.2A

POUR SCHEDULE

1. Pours (1) and (2) are the longitudinal and transverse beams to the bottom of deck (or fillets). Make all Pours (1) prior to Pours (2). Beam construction joints shall not be near a permanent bent but shall be made at a falsework bent. Adjacent beam pours shall be delayed a minimum of 3 days.

2. Pour (3) is the (fillets and) deck. Pour (3) to be delayed a minimum of 3 days after completion of all Pours (2). A deck construction joint may be made over any transverse beam. Delay pouring adjacent sections of deck a minimum of 5 days. Bulkheads for deck pours shall not be removed until at least 3 days after completion of pour. Deck pours may extend over any part of a span or spans so long as they meet these requirements.

BACK

1.1.18.3 Box Girders on Falsework

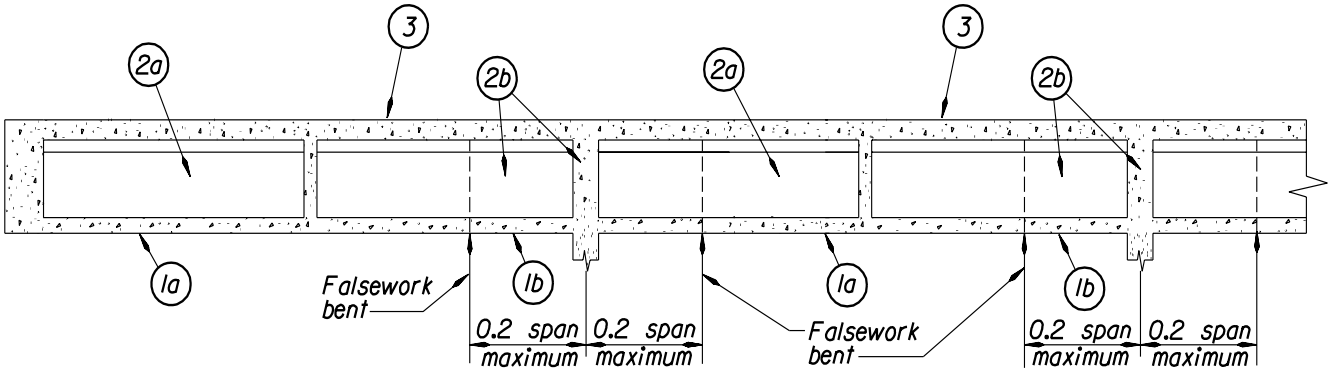

Figure 1.1.18.3A

POUR SCHEDULE:

1. Pours (1a) and (1b) are the bottom slab. Stop Pours (1) at a falsework bent and not at a permanent bent. Delay a minimum of 3 days between adjacent Pours (1). Complete all Pours (1a) prior to starting Pours (1b). Complete all Pours (1) prior to starting Pours (2).

2. Pours (2a) and (2b) are the longitudinal and transverse beams to the bottom of the fillets. Stop Pours (2) over a falsework bent. Delay the start of Pours (2) a minimum of 5 days after bottom slab Pours (1) are complete. Delay a minimum of 3 days between adjacent Pours (2).

3. Pour (3) includes the fillets and deck slab. Pour (3) to be delayed a minimum of 3 days after completion of all Pours (2). Pours (3) may be stopped over any transverse beam, with the use of a deck construction joint. Delay a minimum of 5 days between adjacent Pours (3). Bulkheads for deck pours shall not be removed until at least 3 days after completion of the pour. Deck pours may extend over any part of a span or spans as long as they meet these requirements.

Comments:

Generally, it is preferred that the bottom slab be completely poured first and separately from the longitudinal beams. This ensures a more uniform bottom slab thickness, the slab provides a good base for stem forms, and the continuous bottom slab helps stabilize the falsework system. It also allows the falsework to take its initial settlement without affecting other superstructure components.

BACK

1.1.18.4 Drop-In Precast Prestressed Elements

Complicated types of construction require detailed construction sequence notes, such as the following:

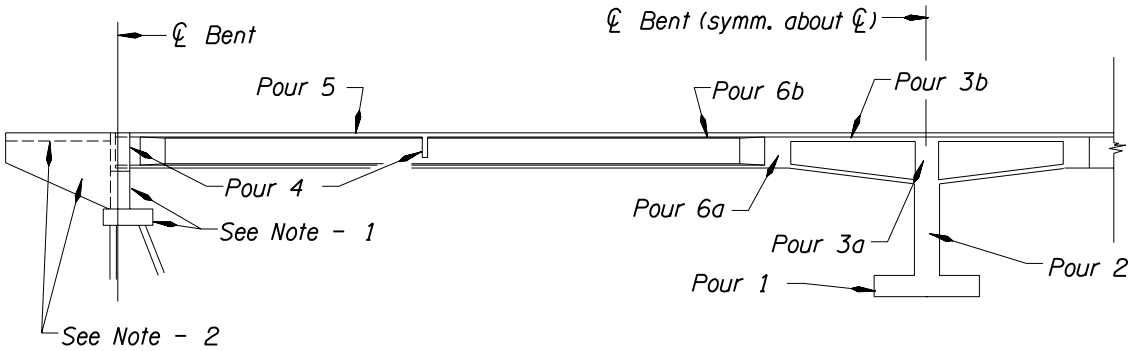

Figure 1.1.18.4A

POUR SCHEDULE:

1. Make Pour (1) .

2. Make Pour (2) , includes Bent 2 column.

3. Make Pour (3a) , includes bottom slab and webs to bottom of top fillet, Beam "C" to bottom of deck.

4. Make Pour (3b) , includes deck and top fillets for cast-in-place section. Delay Pour (3b) a minimum of 3 days after completion of Pour (3a) .

5. Apply Stage I post-tensioning to cast-in-place section. Stressing to begin a minimum of 14 days after completion of Pour (3) , but not until concrete in Pour (3) has reached its design strength.

6. Place prestressed beams. Beams to be placed so that the number of beams in one span does not exceed by more than 4 the number in the opposite span.

7. Make Pour (Pour (4) , includes diaphragm beams "D" and end beams "E".

8. Make Pour (5) , (no less than 60 days after transfer of stress in precast, prestressed beams), includes deck on prestressed beams to diaphragm beam nearest Bent 2.

9. After Pour (Pour (5) has) has been made in Spans 1 and 2, make Pour (6a) , includes remainder of Beam "C". Let concrete take initial set, and make Pour (6)b , includes remainder of deck.

10. Apply Stage I post-tensioning to assembled Spans 1 and 2. Stressing to begin a minimum of 14 days after completion of Pour (6) , but not until concrete in Pour (6) has reached its design strength.

11. Pour curbs.

BACK

1.1.18.4 Drop-In Precast Prestressed Elements - (continued)

NOTES:

1. Bents 1 and 3 footings and walls may be poured any time up to 7 days prior to placing of prestressed beams, but concrete must have reached its design strength prior to beam placement. No part shall interfere with post-tensioning operations.

2. Paving slab and sidewalls may be poured at any time except that no part shall interfere with post-tensioning operations.

3. Deck concrete shall be screeded parallel to bents.

4. Composite decks and/or closure Pours shall not be made until at least 60 days have elapsed from the time of transfer of prestressing force in the precast elements.

1.1.18.5 Continuous Cast-in-place Slabs on Falsework

For pours over 600 yd^3, allow a transverse deck construction joint at 0.2xspan from the next interior bent.

1.1.18.6 End Bents

If the fit of superstructure elements is critical, the end bent construction sequencing should consider this. End wall construction should normally be delayed until the superstructure elements are in place. Delaying the end wall construction also allows the contractor to compensate for errors in superstructure element lengths and end bent locations. Show a construction sequence diagram, with notes, as needed.

1.1.18.7 Steel Girders

See Section 1.2.1.9 for example.

1.1.19 Bearings

1.1.19.1 Elastomeric Bearing Pads

Elastomeric bearings are used to accommodate movements on short to medium-span structures. The three types of pads include:

- plain pads
- laminated pads reinforced with fabric (fiberglass)
- laminated pads reinforced with steel.

Plain pads are made from elastomer molded or extruded into large sheets, vulcanized and then cut to size.

Fabric reinforced pads are made from alternate layers of elastomer and fabric (usually fiberglass) in large sheets, vulcanized and then cut to size. Fabric reinforced pads are restricted to short to medium spans with little or no skew.

Steel reinforced pads are made from alternate layers of elastomer and steel cut to size and then vulcanized. A thin cover layer of elastomer encapsulates the steel to prevent corrosion. The exposed edge voids in the pads caused by the steel laminate restraining devices are shop sealed with an appropriate caulking material.

1.1.19.1 Elastomeric Bearing Pads – (continued)

Use Method "A" to design elastomeric bearings. Where there is a need to use Method "B", specify in the Special provisions and contract drawing that the Method "B" was used. Elastomeric bearings designed using Method "B" require extra testing.

Use the following movements for pad thickness design:

LF*(ES+CR+SH) + LF*(TF or TR)

Where:

ES = elastic shortening movement
CR = creep movement CR = (ES)(CF)
SH = shrinkage movement
TF = temperature fall movement
TR = temperature rise movement
CF = creep coefficient
LF = Load Factor from Table 3.4.1-1 and article 3.4.1 of AASHTO LRFD Design Specification. Use the Load Factor that produces the largest movement in each load combination.

The final elastomer thickness is 2 times the thickness of the elastomer required to accommodate the design movement. Nominal pad thickness should be multiples of ½", from ½" to 6" maximum. The actual finished thickness will vary depending on the type of reinforcement. Fabric has a negligible thickness. Steel plate thickness may vary with the manufacturer, but should be a minimum of 14-gauge.

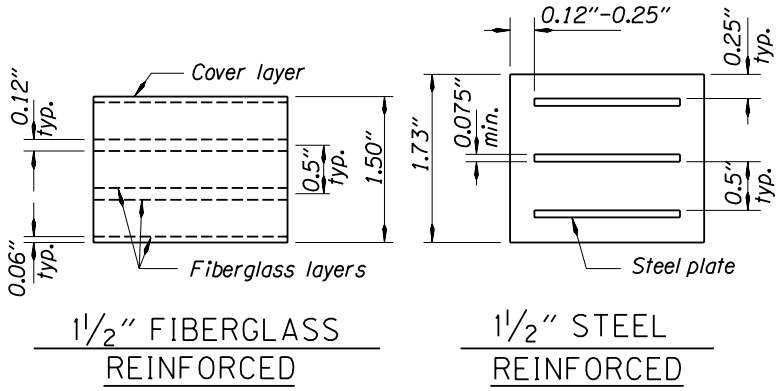

Figure 1.1.19.1A

BACK

1.1.19.1 Elastomeric Bearing Pads - (continued)

Pad thickness called for on detail plans should be the total thickness of the elastomer required. If bearing pad elevations are shown, the assumed finished pad thickness should be listed. Use circular elastomeric bearing pads for curved steel girders.

Examples are shown below.

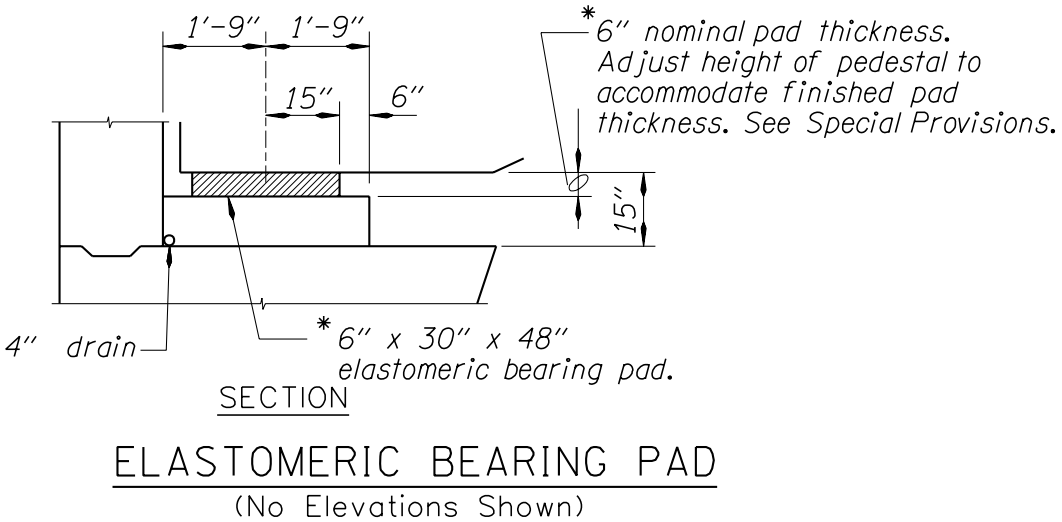

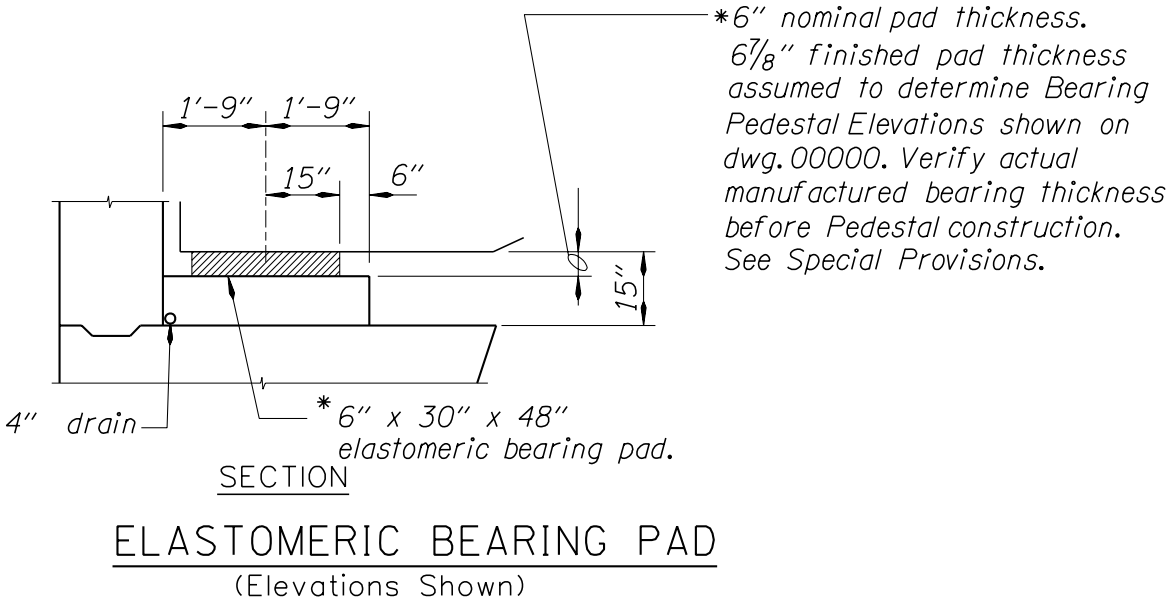

Figure 1.1.19.1B

For prestressed slab and box beam bearing pad sizes, use Figure A1.1.8.7D (end bents) or Figure A1.1.9.2C (interior bents).

BACK

1.1.19.2 Proprietary Pot, Disc, Slide, Radial, or Spherical Bearings

These bearings are normally used on long-span and post-tensioned concrete structures where the design movement cannot be accommodated with elastomeric bearings.

When provided to allow longitudinal movement for concrete superstructures, design bearings to accommodate the anticipated effects of shrinkage, creep and elastic shortening (where applicable) as well as temperature.

Use the following movements for proprietary bearings:

Shortening: LF*(ES + CR + SH + TF)
Lengthening: LF*(TR)

Where:

ES = elastic shortening movement
CR = creep movement CR = (ES)(CF)
SH = shrinkage movement
TF = temperature fall movement
TR = temperature rise movement
CF = creep coefficient
LF = Load Factor from Table 3.4.1-1 and article 3.4.1 of AASHTO LRFD Design Specification. Use the Load Factor that produces the largest movement in each load combination.

The creep coefficient above is taken as 1.5 for both prestressed and post-tension concrete structures. Shrinkage movement is calculated using 0.0004 times the total length of the structure. For prestressed concrete structures 40% of this movement takes place within the first thirty days after manufacture. Therefore, the amount of creep and shrinkage movement for these structures, after placement, can normally be taken as 60% of the total.

Values for shortening of post-tensioned, cast-in-place concrete bridges have been determined by field measurements by the ODOT Bridge Section. Compare the design values with the field measured values and use the more conservative values.

The initial position of expansion bearings shall be detailed so that the bearing will behave satisfactorily after the design movement has taken place.

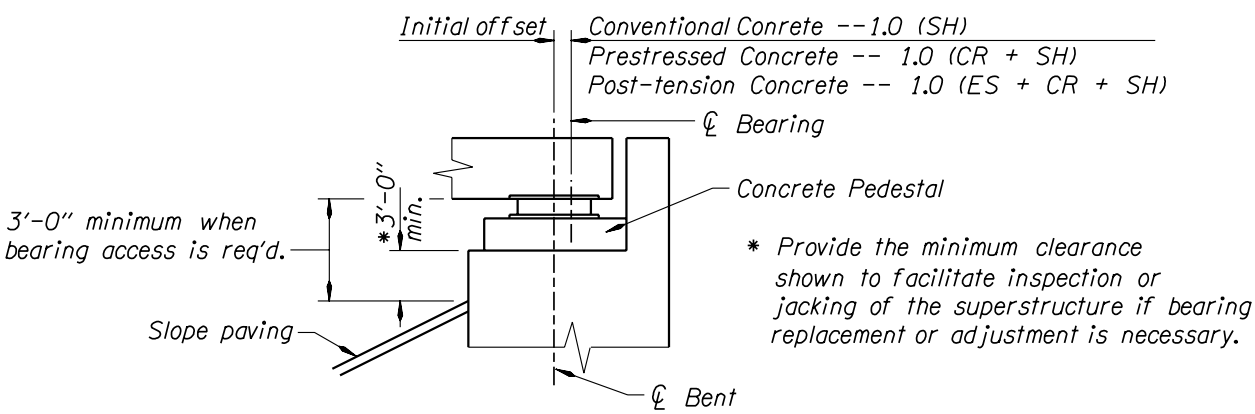

Figure 1.1.19.2A

1.1.19.2 Proprietary Pot, Disc, Slide, Radial, or Spherical Bearings - (continued)

Performance Specifications for Approved Proprietary Bridge Bearings are now covered by the Standard Specifications. Approved bearings are listed in the *Qualified Products List*, which is available on the ODOT website.

The designer must check the shop drawings, specified test results, and certifications for compliance with these specifications.

When proprietary bearings are used, show the following details and information in the contract plans:

(1) Schematic Drawing - A schematic drawing of the bearing showing the method of attachment of the upper and lower units to the superstructure and substructures, respectively. See Figure 1.1.19.2B for an example.

(2) List design notes for:

- Required clearance to edge of concrete support
- Maximum allowable concrete bearing stress
- Minimum rotational capacity of bearing (not less than 0.015 radian)
- Any restriction as to type of bearing (pot, disc or spherical)
- Reference to bearing schedule for load and movement capacity.
- Reference to standard specifications for painting.
- Reference to the *Qualified Products List* for approved bearings.

Paint all exposed surfaces of the bearing devices except teflon, stainless steel, machine finished or polished bearing surfaces, as set forth in 00594 of the Standard Specifications. Provide a primer coat only for portions to be in contact with concrete and for steel to steel contact surfaces.

BACK

1.1.19.2 Proprietary Pot, Disc, Slide, Radial, or Spherical Bearings - (continued)

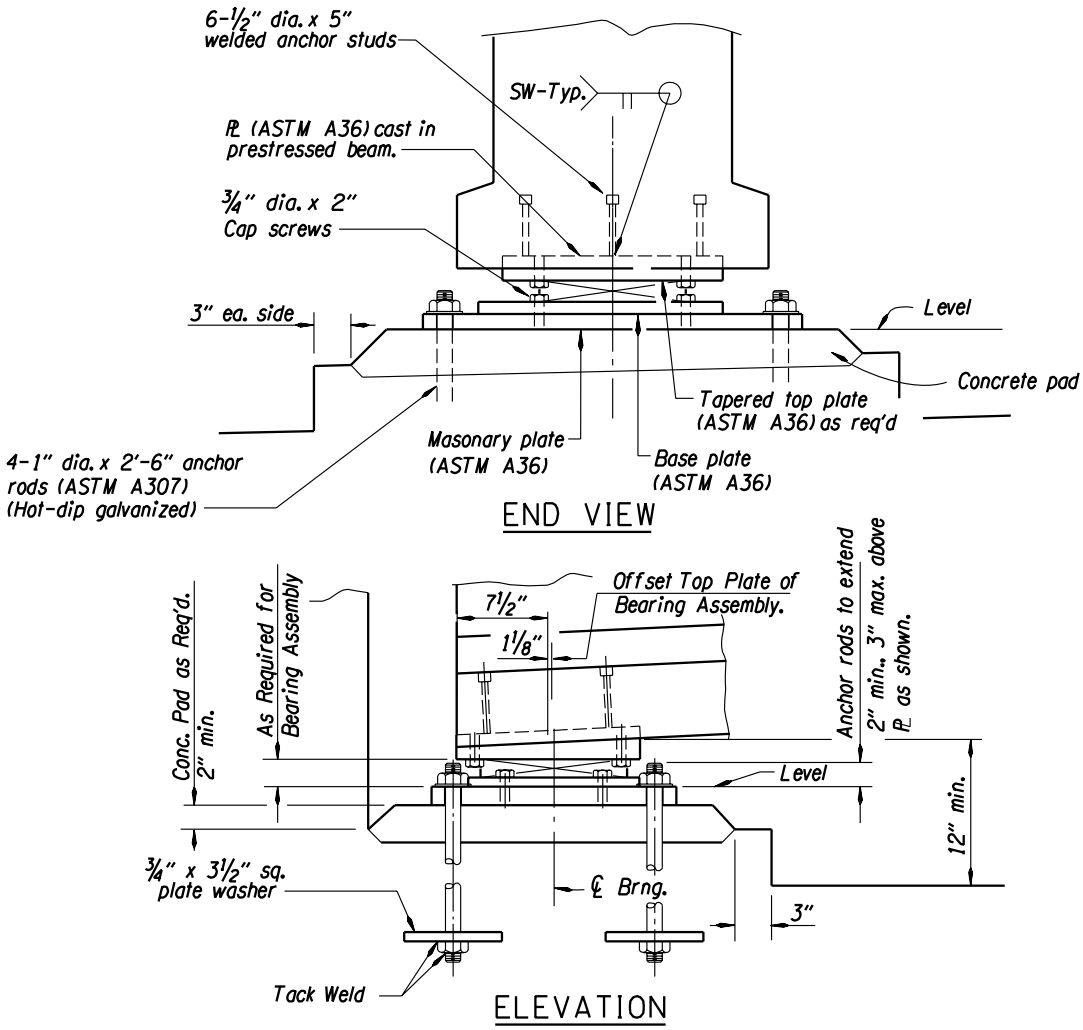

Figure 1.1.19.2B

(3) Bearing Schedule – Include the following items in the Bearing schedule:

- Location of bearing (bent number)
- Number of bearings required (number per bent)
- Bearing fixity (fixed, guided or non-guided)
- Final dead load (load/bearing)
- Vertical design capacity (dead load + live load + impact, load/bearing)
- Horizontal design capacity of fixed and guided bearings (not less than 10 percent of the vertical design capacity).

BACK

1.1.19.2 Proprietary Pot, Disc, Slide, Radial, or Spherical Bearings - (continued)

The specification requires each guided bearing to resist the entire horizontal load at any one bent. Use no more than two guided bearings per bent or hinge. Where more than two guided bearings are required, provide devices independent of the bearings to resist horizontal loads. Use non-guided bearings at these locations.

- Mean temperature
- Design movements for:
  - Temperature rise
  - Temperature fall
  - Creep, shrinkage and elastic shortening
  - Change in bearing centerline per specified temperature increment

Provide the top bearing plate dimensions shall be adequate to compensate for the initial bearing offset shown.

Provide additional bolted plates with the top and bottom plates of the bearing assembly to facilitate removal of bearing for repair or replacement and to provide a level surface for the bearing unit.

BEARING SCHEDULE

Bent	No. Req'd	Type	Design Load Capacities in kips per Bearing			Initial Offset	Calculated movements			Movement per 10°F Temp. change	Minimum Movement Capacity from Initial Position		
			Vertical	Lateral	Longit.		30°F Temp. Rise	40° F Temp. Fall	Creep, shrinkage & Elastic shortening		Temp. Rise Direction	Temp. Fall Direction	Total
1 & 5	4	Guided	1000	*600	—	3″	7/8″	1 1/4″	4 1/2″	5/16″	1 1/2″	7 1/2″	9″

* Reduce design load to 200 kips for PTFE surface only.

Figure 1.1.19.2C

1.1.19.3 Bearing Replacement

Consider the potential of expansion bearing replacement during the life of the structure in sizing of crossbeams and bents. Provisions may need to be made for jacking locations.

If a bent is accessible (close to the ground, out of traffic, etc.) it may be assumed that a falsework jacking bent can be constructed and no special provisions on the bent are required.

If the bent is not easily accessible, provision for jacking, such as a wider crossbeam or strengthened diaphragm beam should be provided.

BACK

1.1.19.4 Reinforced Concrete Bearing Seats

(1) Clearance - The minimum horizontal clearance from the edge of a bearing plate, or 1" and thicker elastomeric bearing pad, to the edge of a concrete bearing seat shall be 6", or 3" plus the thickness of grout under the bearing, whichever is greater. Where the bearing is skewed with the bent, this dimension may be reduced at the corner of the pad. Locate anchor bolts a minimum of 6" clear of the nearest face of concrete.

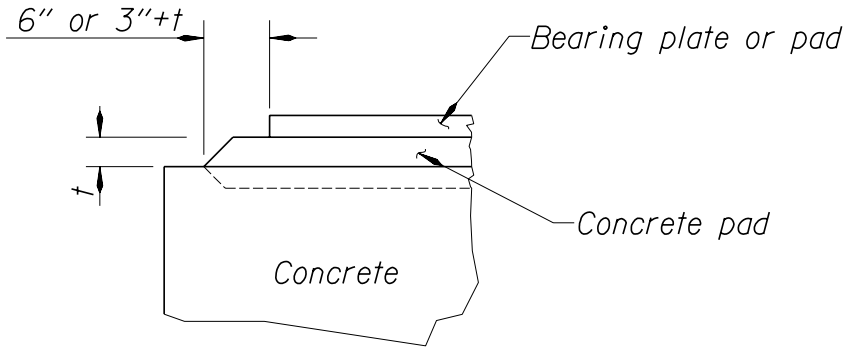

Figure 1.1.19.4A

(2) Additional Reinforcement - Generally, a reinforced concrete buildup, as shown below, shall be detailed under the bearings of all prefabricated beams, except precast slabs and box beams less than 70' in length.

Certain bearings may require no concrete buildup but have the bearing surface ground to grade.

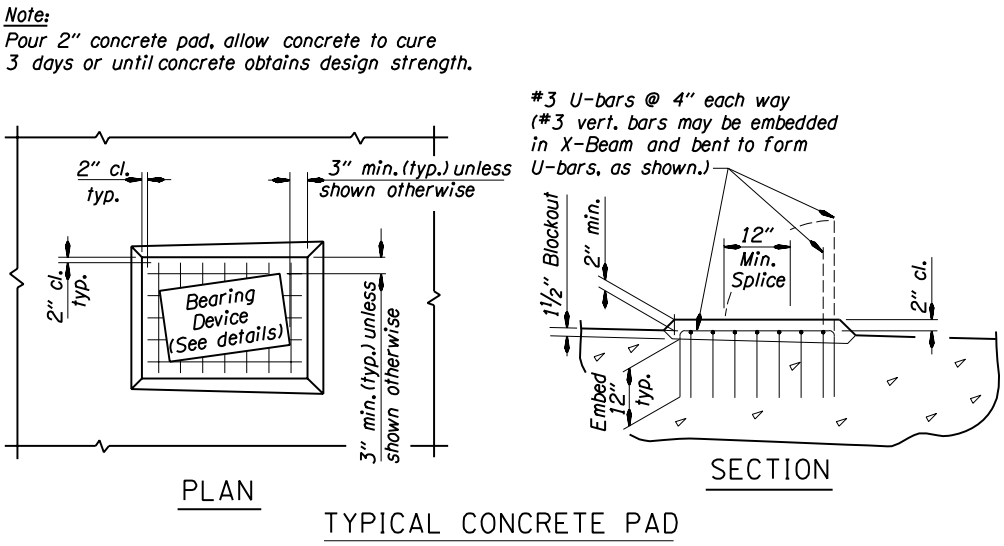

Figure 1.1.19.4B

BACK

1.1.19.5 Unreinforced Bearing Seats (Prestressed Slabs and Box Beams)

(1) Clearance -

NOTE: Set precast concrete slabs over 40' in length on elastomeric bearing pads.

Note:
Place ½" concrete layer on concrete pad, place elastomeric bearing pads and preformed expansion joint filler on concrete layer. Place slabs on bearing pads before the concrete layer is fully set to ensure uniform bearing across full width of the slab. If uniform bearing is not acheived, lift slab and repeat procedure. Remove any excess concrete protruding above the bearing pads immediately after placing slab.

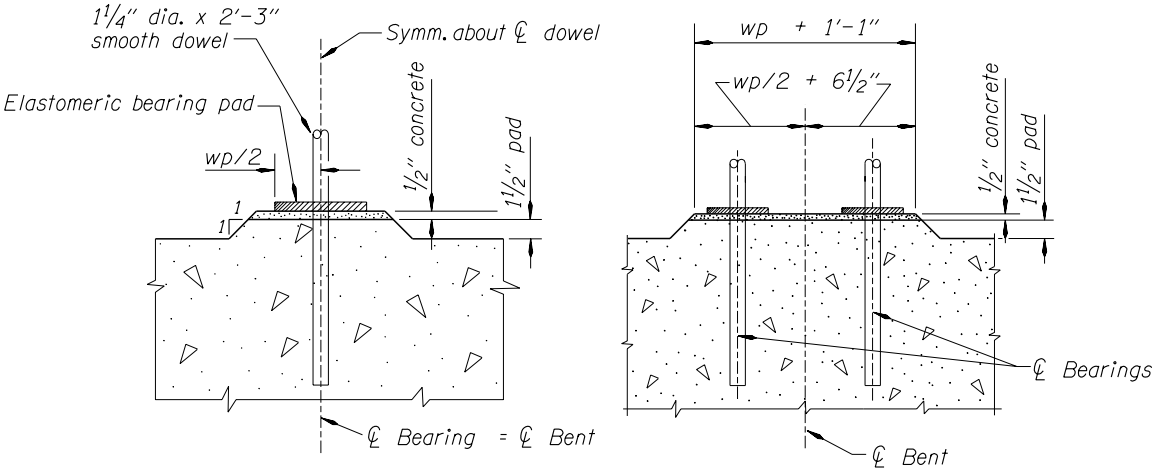

Figure 1.1.19.5A

(2) Construction Procedure -

STEP 1. Pour 1-1/2" concrete pad, allow concrete to cure for 3 days or until concrete obtains design strength

STEP 2. Place ½" concrete layer as shown in Figure 1.1.19.5A.

BACK

1.1.20 Decks

1.1.20.1 Design and Detailing

Design

Design according to AASHTO *LRFD Bridge Design Specifications*.

For deck requirements on Precast Prestressed elements, see section 1.1.14.1.

Do not use the empirical design method for deck reinforcing steel. Excessive deck cracking, apparently due to under reinforcement, precludes the use of this method until further notice.

The preferred orientation of the top mat of deck steel will have the longitudinal bars on top. This orientation places the longitudinal bars closer to the surface and thereby helps reduce the size of deck shrinkage cracks. For the rare case when the primary concrete shrinkage is in the transverse direction, consider placing the top longitudinal bars below the top transverse bars.

Do not use reinforcement larger than a #6 bar in a bridge deck, except when needed to resist negative moment for continuous-span girders. When the top mat has longitudinal bars on top, any longitudinal reinforcement larger than a #6 bar will need to be placed in the bottom mat.

Unless a project specific deck reinforcement design is developed, use the "Concrete Deck Reinforcement (LRFD Design)", Figure 1.1.20.1A or 1.1.20.1B, for design and detailing. These figures are shown on the following pages.

For project specific deck designs, conform to the following minimum requirements:

Section 4.6.2.1 in the AASHTO LRFD Bridge Design Specifications
Concrete Class: HPC4000 – 1½, 1 or ¾ (except box girder decks that require greater strength)
Reinforcement: Grade 60
Reinforcement no larger than #6 bar
Reinforcement spacing ≥ 5" and ≤ 8"
Surface wear allowance = $^5/_8$"
Satisfy section 5.7.3.4 (Control of Cracking by Distribution of Reinforcement) and equation 5.7.3.4-1 in the AASHTO LRFD Bridge Design Specifications with γ_e = 1.0. Note that this equation was modified with the 2005 Interim Revisions. The "z" equation is no longer valid.
Limit top of concrete compressive service stress due to positive moment in the deck (between girders) to 0.4 * f'_c (i.e., 1600 psi).

Submit a design deviation request to the State Bridge Engineer for any concrete bridge deck designs not meeting any one of the minimum requirements above. With the request, include the following:

Design loading assumptions (dead, live and future wearing surface)
Documentation of which minimum requirements were met and which were exceeded
Orientation of the top mat (longitudinal on top or transverse on top)
Deck thickness
Maximum service stress in the top of the deck due to positive moment in the deck (between girders)
Maximum service stress in the bottom of the deck due to negative moment in the deck (over a girder)

BACK

1.1.20.1 Design and Detailing - (continued)

CONCRETE DECK REINFORCEMENT (LRFD DESIGN)
Steel Girders & Cast-in-Place Concrete box Girders

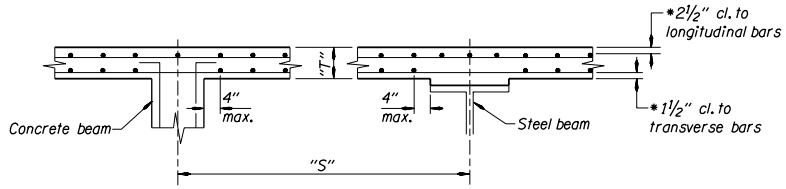

Assumptions
Specifications: AASHTO (Section 4.6.2.1)

Concrete Class: HPC 4000

Reinforcement: Grade 60

Top Mat Orientation: Longitudinal bars on top

Dead Load: 150 pcf + 50 psf future wearing surface

Deck DL moments: Negative -0.10wS°2
Positive +0.08wS°2

Live Load: Table A4-1 using 6" from ℄ of girder to the negative moment design section

*Design Moment: 1.25*DL + 1.5*DW +1.75*LL*
(Impact included in Table A4-1 live loads)

Surface wear: ⅝" allowance for surface wear subtracted from positive moment "d"

Steel Girders: Top flange width not less than 24". Project specific design is required when top flange is less than 24".

Concrete Box Girders: Girder stem width not less than 12". For girder stem greater than or equal to 16". use Deck Design Chart for Precast P/S Concrete Members

Note:
Additional reinforcement to accomodate rail loads at deck overhangs is not included in these details. The designer is responsible for design of overhangs.

Note:
"S" is measured parallel to the transverse bars. Bar spacing is measured perpendicular to the bars.

Place bottom mat bars directly below and in line with a top mat bar. At expansion and construction joints, however, it is not neccessary for all bottom mat bars to be directly below a top mat bar.

** For coastal locations, specify 2" clear top and bottom. See also Section 1.1.25.3 for additional corrosion protection recommendations.*

Steel Girders & CIP Concrete Box Girders

Girder Spacing	Deck Thickness	Transverse Bars	Longitudinal Bars
5'-0"	8"	#4 @ 6½"	#4 @ 8"
5'-3"	8"	#4 @ 6½"	#4 @ 8"
5'-6"	8"	#4 @ 6"	#4 @ 8"
5'-9"	8"	#4 @ 6"	#4 @ 8"
6'-0"	8"	#4 @ 5½"	#4 @ 8"
6'-3"	8"	#4 @ 5½"	#4 @ 8"
6'-6"	8"	#4 @ 5"	#4 @ 8"
6'-9"	8"	#4 @ 5"	#4 @ 8"
7'-0"	8"	#4 @ 5"	#4 @ 7"
7'-3"	8"	#4 @ 5"	#4 @ 7"
7'-6"	8"	#5 @ 6"	#5 @ 8"
7'-9"	8"	#5 @ 6"	#5 @ 8"
8'-0"	8"	#5 @ 5½"	#5 @ 8"
8'-3"	8"	#5 @ 5½"	#5 @ 8"
8'-6"	8"	#5 @ 5½"	#5 @ 8"
8'-9"	8"	#5 @ 5½"	#5 @ 8"
9'-0"	8¼"	#5 @ 5½"	#5 @ 8"
9'-3"	8¼"	#5 @ 5½"	#5 @ 8"
9'-6"	8½"	#5 @ 5½"	#5 @ 8"
9'-9"	8½"	#5 @ 5½"	#5 @ 8"
10'-0"	8¾"	#5 @ 5½"	#5 @ 8"
10'-3"	8¾"	#5 @ 5½"	#5 @ 8"
10'-6"	8¾"	#5 @ 5"	#5 @ 7"
10'-9"	9"	#5 @ 5"	#5 @ 7"
11'-0"	9"	#5 @ 5"	#5 @ 7"
11'-3"	9¼"	#5 @ 5"	#5 @ 7"
11'-6"	9¼"	#5 @ 5"	#5 @ 7"
11'-9"	9½"	#5 @ 5"	#5 @ 7"
12'-0"	9½"	#6 @ 6"	#5 @ 6"
12'-3"	9½"	#6 @ 6"	#5 @ 6"
12'-6"	9¾"	#6 @ 6"	#5 @ 6"
12'-9"	9¾"	#6 @ 6"	#5 @ 6"
13'-0"	10"	#6 @ 6"	#5 @ 6"
13'-3"	10"	#6 @ 6"	#5 @ 6"
13'-6"	10¼"	#6 @ 6"	#5 @ 6"
13'-9"	10¼"	#6 @ 6"	#5 @ 6"
14'-0"	10½"	#6 @ 6"	#5 @ 6"
14'-3"	10½"	#6 @ 6"	#5 @ 6"
14'-6"	10¾"	#6 @ 6"	#5 @ 6"
14'-9"	10¾"	#6 @ 6"	#5 @ 6"
15'-0"	11"	#6 @ 6"	#5 @ 6"

F:\ODOT_DATA\PROJECTS\BDDM\Craig_Proposal\2-06Deck.dgn 4/5/2006 10:19:54 AM hwye03s

1:48 - Proposed Fig. 1.1.20.1A

Figure 1.1.20.1A

BACK

1.1.20.1 Design and Detailing - (continued)

CONCRETE DECK REINFORCEMENT (LRFD DESIGN)
Standard Precast Prestressed Concrete members

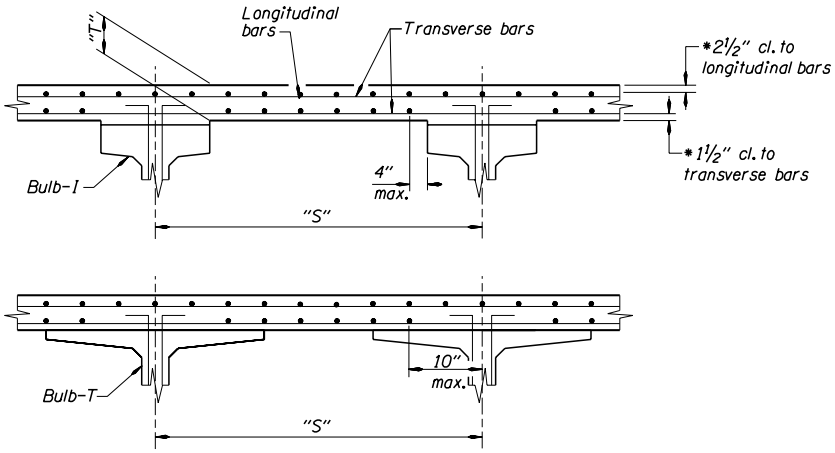

Assumptions

Specifications: AASHTO (Section 4.6.2.1)

Concrete Class: HPC 4000

Reinforcement: Grade 60

Top Mat Orientation: Longitudinal bars on top

Dead Load: 150 pcf + 50 psf future wearing surface

Deck DL moments: Negative -0.10wS°2 Positive +0.08wS°2

Live Load: Table A4-1 using 8" from ℄ of girder to the negative moment design section

Design Moment: 1.25*DL + 1.5*DW +1.75*LL
(Impact included in Table A4-1 live loads

Surface wear: ⅝" allowance for surface wear subtracted from positive moment "d"

> Note:
> Additional reinforcement to accomodate rail loads at deck overhangs is not included in these details. The designer is responsible for design of overhangs.

Note:
"S" is measured parallel to the transverse bars. Bar spacing is measured perpendicular to the bars.

Place bottom mat bars directly below and in line with a top mat bar. At expansion and construction joints, however, it is not neccessary for all bottom mat bars to be directly below a top mat bar.

* For coastal locations, specify 2" clear top and bottom. See also Section 1.1.25.3 for additional corrosion protection recommendations.

Precast Prestressed Concrete Members

Girder Spacing	Deck Thickness	Transverse Bars	Longitudinal Bars
5'-0"	8"	#4 @ 6½"	#4 @ 8"
5'-3"	8"	#4 @ 6½"	#4 @ 8"
5'-6"	8"	#4 @ 6½"	#4 @ 8"
5'-9"	8"	#4 @ 6½"	#4 @ 8"
6'-0"	8"	#4 @ 6"	#4 @ 8"
6'-3"	8"	#4 @ 6"	#4 @ 8"
6'-6"	8"	#4 @ 5½"	#4 @ 8"
6'-9"	8"	#4 @ 5½"	#4 @ 8"
7'-0"	8"	#4 @ 5½"	#4 @ 8"
7'-3"	8"	#4 @ 5"	#4 @ 7"
7'-6"	8"	#4 @ 5"	#4 @ 7"
7'-9"	8"	#4 @ 5"	#4 @ 7"
8'-0"	8"	#5 @ 6"	#5 @ 8"
8'-3"	8"	#5 @ 6"	#5 @ 8"
8'-6"	8"	#5 @ 6"	#5 @ 8"
8'-9"	8"	#5 @ 6"	#5 @ 8"
9'-0"	8¼"	#5 @ 6"	#5 @ 8"
9'-3"	8¼"	#5 @ 6"	#5 @ 8"
9'-6"	8½"	#5 @ 6"	#5 @ 8"
9'-9"	8½"	#5 @ 5½"	#5 @ 8"
10'-0"	8¾"	#5 @ 5½"	#5 @ 8"
10'-3"	8¾"	#5 @ 5½"	#5 @ 8"
10'-6"	8¾"	#5 @ 5"	#5 @ 7"
10'-9"	9"	#5 @ 5"	#5 @ 7"
11'-0"	9"	#5 @ 5"	#5 @ 7"
11'-3"	9¼"	#5 @ 5	#5 @ 7"
11'-6"	9¼"	#5 @ 5"	#5 @ 7"
11'-9"	9½"	#5 @ 5"	#5 @ 7"
12'-0"	9½"	#5 @ 5"	#5 @ 7"

Figure 1.1.20.1B

BACK

1.1.20.1 Design and Detailing - (continued)

Use cast-in-place HPC concrete for all decks. Full-depth precast deck panels may be considered on a case by case basis. An exception letter from the State Bridge Engineer will be required before full-depth precast deck panels can be used. Partial-depth precast deck panels will not be permitted.

Detailing

Wearing surface on cast-in-place concrete decks
Normally, structures with cast-in-place decks will not have an AC wearing surface.

However, Region may be concerned with icing conditions on a short concrete bridge deck section and request ACWS on the deck. If an ACWS is used, a waterproofing membrane is normally required. If a Class "F" mix (free draining) is used, special attention needs to be given to drainage details at joints and deck drains to prevent trapping water adjacent to these areas.

For typical deck steel placed in two mats, place bottom mat bars such that each bottom mat bar is directly below and in line with a top mat bar. At deck expansion joints and at deck construction joints, however, it is not necessary for all bottom bars to be directly below a top bar.

Figures 1.1.14.2C, 1.1.16.7A, 1.1.20.1A, 1.1.25.3A, 1.1.25.3B and 1.1.25.3C have been modified to correspond with the above statement. Figures 1.1.25.3A, 1.1.25.3B and 1.1.25.3C have also been modified to more correctly match the intent and terminology in Table 1.1.25.3A.

Vibrations

Vibrations from adjacent traffic and/or construction activity are not likely to cause cracking in freshly placed deck concrete. ODOT has recorded vibrations as high as 0.6 in/sec during a second stage deck placement without any noticeable detrimental affects. Typical deck closure placements may have even higher vibrations. Again, no detrimental affects have been documented on any deck closure placement.

The following is a very rough guide to vibration levels:

- 0.08 in/sec vibrations perceptible
- 0.1 in/sec continuous vibrations may begin to annoy people
- 0.2 in/sec short-term vibrations may begin to annoy people
- 0.4 to 0.6 in/sec typical max. short-term vibration, concrete bridge < 100 ft span
- 0.6 to 1.0 in/sec typical max. short-term vibration, concrete bridge > 100 ft span

Although damage to concrete due to vibrations is rare, unnecessary vibrations should still be avoided where reasonable measures can be taken. For staged construction, providing deck closure segments is preferred to minimize both vibrations and the affects of adding additional deck dead load, creep and shrinkage to the first stage. Providing either a joint or closure segment between substructure (cap) stages will also reduce potential for traffic vibrations to be transmitted through those elements.

BACK

1.1.20.1 Design and Detailing - (continued)

Where there is a concern that vibrations may be excessive, the following practices can be considered as mitigation:

- Low-slump concrete – Although concrete damage due to vibrations is rare, use of low-slump concrete (greater than 4") will minimize the risk. ODOT's HPC deck concrete mix is generally a low-slump mix that meets this requirement. Therefore, no change to the standard HPC deck concrete mix should be necessary.
- Reinforcing details – Do not use hooked bars in closure segments. Ensure lap splices are in contact and well-tied as much as possible. Where lap splices cannot be in contact, use two rows of longitudinal bars tied to both lap splice segments to create a rebar mat that cannot be easily moved.
- Retarder admixture – Varying amounts of set retarder admixture can be used such that the entire deck will set up at about the same time. The Structure Quality Engineer from the ODOT Construction Section can assist in determining when this admixture is needed and how to apply it.

Reduce vehicle speed – Where vibration is due to adjacent traffic, reducing vehicle speed will generally reduce the amount of vibrations. However, vehicle speeds will generally need to be reduced down to around 15 mph before a significant reduction in vibrations can be obtained. Therefore, this measure should only be considered in extreme circumstances. Where possible, moving traffic laterally from an adjacent deck placement will likely be more effective than reducing vehicle speed.

1.1.20.2 Deck Expansion Joint Seals

Design expansion joint seals to provide for the effects of temperature, shrinkage and creep.

(1) General Information and Definitions

Armored Corner - Steel armoring to protect the vertical edges of a joint opening. The armor may be steel angles or steel shapes.

Asphaltic Plug Joint Systems - A closed expansion and contraction joint system composed of aggregate and flexible binder material placed over a steel bridging plate.

Closed Expansion Joint - A joint in which a seal material is placed to prevent water or debris from entering the joint. This includes poured joint seals, compression joint seals, asphaltic plug joint systems, preformed strip seals, and modular expansion joint system.

Filled Joint - A joint using a preformed joint filler, hot poured joint filler, traffic loop sealant, or a combination of these materials.

Hot Poured Joint Filler - A filled joint filled with a hot-poured asphaltic material.

Modular Expansion Joint System - A closed expansion and contraction joint using a series of continuous preformed strip seals inserted into steel shapes to seal the joint.

Poured Joint Seal - A closed expansion and contraction joint sealed with a rapid-cure poured joint sealant (2 part silicone).

Preformed Compression Joint Seal - A closed expansion and contraction joint sealed with a continuous preformed elastomeric compression gland.

Preformed Joint Filler - A filled joint using a preformed material placed prior to the concrete pour.

BACK

1.1.20.2 Deck Expansion Joint Seals – (continued)

Preformed Joint Seal - A closed expansion joint using preformed strip seal systems, preformed compression joint seals, or modular expansion joint systems as specified.

Preformed Strip Seal System - A closed expansion and contraction joint using a continuous preformed elastomeric gland (strip seal) inserted into an extruded or formed steel retainer bar with steel anchors.

Traffic Loop Sealant - A filled joint between the bridge and bridge end panel connection where asphalt surfacing is used.

Use preformed single strip seals to seal deck joints with up to 4" range of movement (1-1/2" minimum installation width). For joints of greater anticipated movement, use a modular expansion joint seal. It is not recommended to use a modular joint solely to provide for possible seismic movements. Normally the angle of attack of snowplows is skewed 30 degrees to the roadway alignment. Snowplow blades can fall into the joint where the skew angle of the joint matches the snowplow's angle, resulting in danger to the snowplow driver or traffic.

Preformed compression seals may be specified for joints with a design movement of up to 1-3/4".

Asphaltic plug joint seals may be specified where following conditions are satisfied:

- Maximum range of design movement up to 1¾" (total).
- Maximum bridge skew less than 45°.
- Maximum lateral movement at joint ¼".
- Maximum vertical movement at joint (uplift) ¼".

Asphaltic Plug joints do not perform well under following conditions:

- Where the approaches are asphalt concrete.
- Close to stop light or where traffic are accelerating or dilacerating because of the special geometry or before stop light.
- Bridge with a curved horizontal alignment.

See Standard Drawings BR140, BR141, BR145, BR150, BR155, and BR156 for joint details.

Drawing BR145 and BR150 show the depth of metal to be 9", with a plate being welded to the 2" deep rail section. ….

For modular joints, the bottom of the rail section must be the same depth as the bearing boxes, as noted as "Point F" on Drawing BR150.

Check the *Qualified Products List* for the currently acceptable materials and joint systems.

Joint Terminology - It has been a common practice to incorrectly specify certain joint materials on Bridge drawings. All drawings should be corrected to provide consistency with joint definitions.

BACK

1.1.20.2 Deck Expansion Joint Seals - (continued)

(2) <u>Expansion Joint Blockout</u>

A blockout detail should be shown on the plans to allow the expansion joint assembly to be placed a period of time after the final deck pour. Providing a blockout makes the adjacent deck pour easier, provides smoother deck transition to joint, and allows the majority of the superstructure shrinkage to occur prior to joint assembly placement.

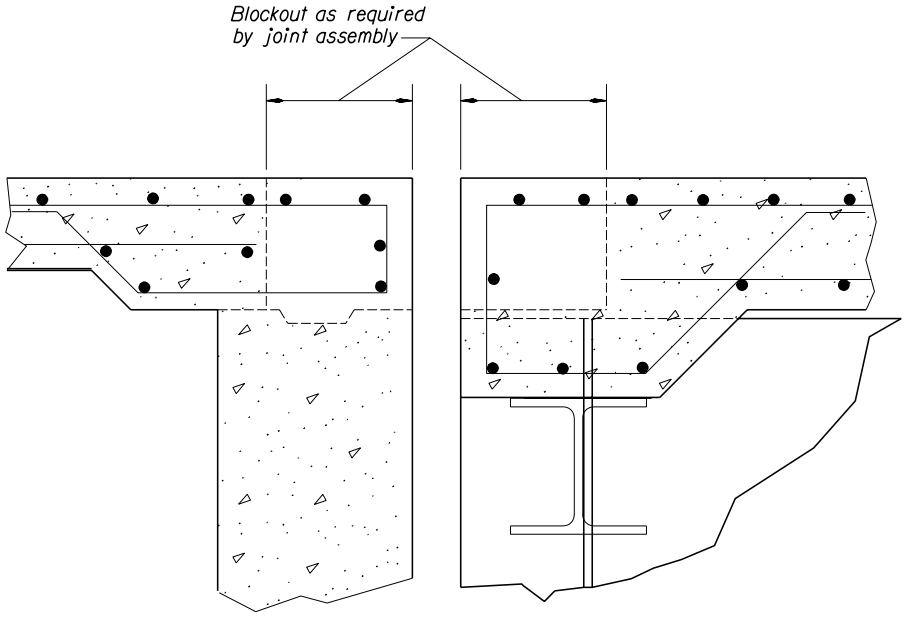

Figure 1.1.20.2A

BACK

1.1.20.2 Deck Expansion Joint Seals - (continued)

(3) Expansion Joint Setting, General

Use a minimum change of joint width due to shrinkage of 1/4"/100' for the full length of nonpost-tensioned concrete segments (both pretensioned and conventional).

Use a change of joint width due to creep and shrinkage of 1/2"/100' for the contributing length of post-tensioned segments.

Use the following for design:

(a) R = LF*(TR + TF)
(b) R = LF*(TR + TF + CR + SH)

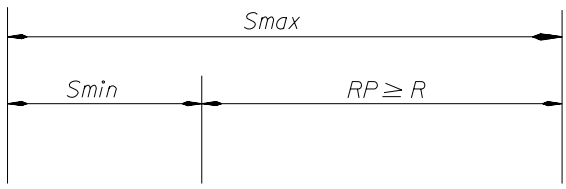

Figure 1.1.20.2B

Where:

S_{min} = Minimum serviceable seal width
S_{max} = Maximum serviceable seal width
R = Required seal range
RP = Provided seal range (S_{max} - S_{min})
CR = Creep movement CR = (ES)(CF)
SH = Shrinkage movement
TF = Temperature fall movement
TR = Temperature rise movement
ES = Elastic shortening
CF = Creep factor
LF = Load Factor from Table 3.4.1-1 and article 3.4.1 of AASHTO LRFD Design Specification. Use the Load Factor that produces the largest movement in each load combinations.

	Conv. Concrete	Prestressed Concrete	P/T Concrete
CREEP: CREEP FACTOR	———	1.5	1.5
Portion of CREEP to use	———	50%	70%
SHRINKAGE: ult	0.0004	0.0004	0.0004
Portion of SHRINKAGE to use	60%	60%	60%

Figure 1.1.20.2C

For the compression seals shown on Drawing BR140 S_{min} and S_{max} are the width of the seal under a compressive force of 50 and 10 lbs. per inch, respectively. In skewed joints, S_{min} and S_{max} may be limited by the allowable shear deformation of the seal. For the seals shown on BR140, shear deformation of the seal should never exceed 10^0.

1.1.20.2 Expansion Joint Setting - (continued)

(4) <u>Joint Setting at Mean Temperature</u>

In most cases, the range of serviceable seal width provided by a standard joint seal (RP) will be somewhat larger than the range required by design (R). This excess [E = RP - R] shall be equally distributed for expansion and contraction.

The following schematics show joint settings for the two design cases above:

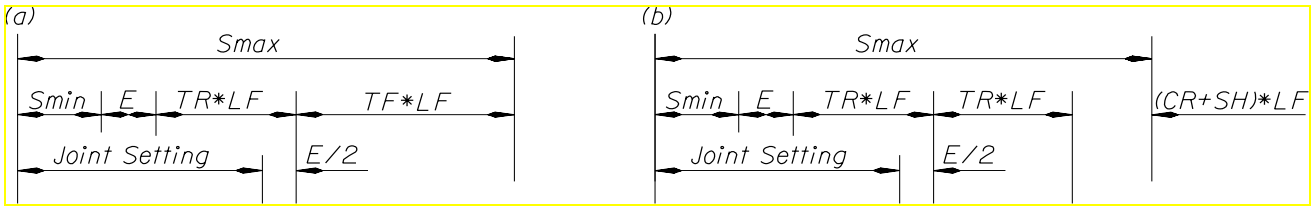

Figure 1.1.20.2D

Use the following form to call out joint settings on the plans:

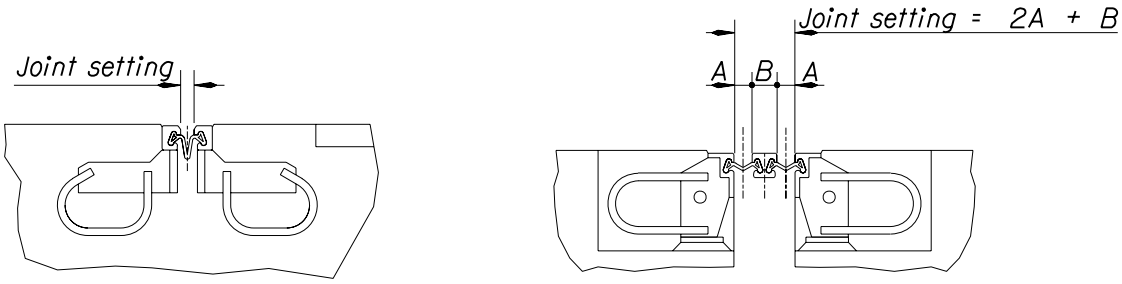

Figure 1.1.20.2E

Decrease Joint setting ___ inches for every 10^{0}F of structure temperature above ___^{0}F.

Increase joint setting ___ inches for every 10^{0}F of structure temperature below ___^{0}F.

Expansion joints are normally set after tensioning is complete, so elastic shortening is not included in the joint setting width.

1.1.20.2 Expansion Joint Setting - (continued)

At those locations on the structure where an electrical conduit crosses an expansion joint, show a detail similar to the following on the plans:

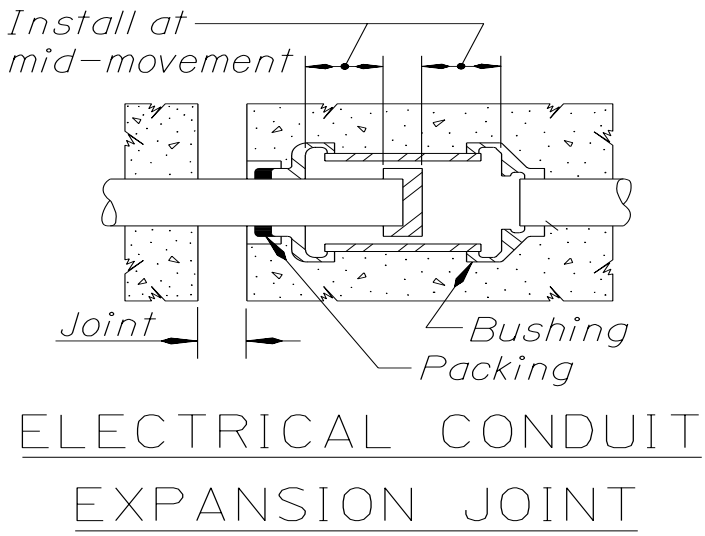

Figure 1.1.20.2F

1.1.20.3 Deck Drainage

Some form of drainage system is normally needed, on or off of structures that have curbs or concrete parapet rails. The Roadway Plans drainage details should be carefully reviewed. If drains are required, the Hydraulics Unit will do the design and determine the size and spacing. Bridge length, deck grades, cross slope, typical section, and deck surface type will be needed to determine the deck drain layout.
The designer must also verify that the gutter profiles do not result in "birdbaths" or unsightly dips in the rail. If there is a question, plot the gutter grade.
Deck drains and drain pipes become easily clogged and are a continual maintenance problem. High pressure hoses used for cleaning cannot make 90 degree turns. For 90 degree pipe connections, use 2-45 degree connections or a 4' minimum radius sweeping 90 degree connection. Add clean-out ports or junction boxes at every 90 degree connection. Clean-outs should be at a 45 degree angle to the main line.

Whenever possible, drainage preferably should be carried off of the structure and caught in inlets. Upslope drainage should also be caught by inlets before crossing the structure.

BACK

1.1.20.3 Deck Drainage - (continued)

Deck drainage not carried to the ends of the structure to inlets is removed by deck drain and pipes discharging directly on the area below or carrying it through deck drains and pipes to a surface collection or dispersal system.

If deck drains are necessary, place them upslope from expansion joints to keep as much drainage as possible out of the joints.

Special environmental considerations may be required on some projects. Direct discharge should not be used on bridges spanning designated water quality limited streams, other streams with severe non-point source pollution problems, or streams with populations of listed, proposed or candidate threatened and endangered species of fish or other aquatic life. Water quality requirements take precedence over hydraulic requirements.

Generally retrofitting existing structures to a non-direct discharge is not necessary. Structure widening normally can use the same type of drainage system as the existing structure. Normally, drainage retrofitting needs to be addressed only when the project involves a major rehabilitation of the structure.

If direct discharge is on water crossings and/or land crossings, make sure the drainage does not cause erosion or would be hazardous to the public. To prevent exposure of the superstructure to the drainage, it should be carried by drain pipes to 3" below the bottom of the superstructure.

Structure drain pipe shall be galvanized steel. Present seismic design requirements for concrete containment within columns precludes placement of drain pipes within columns.

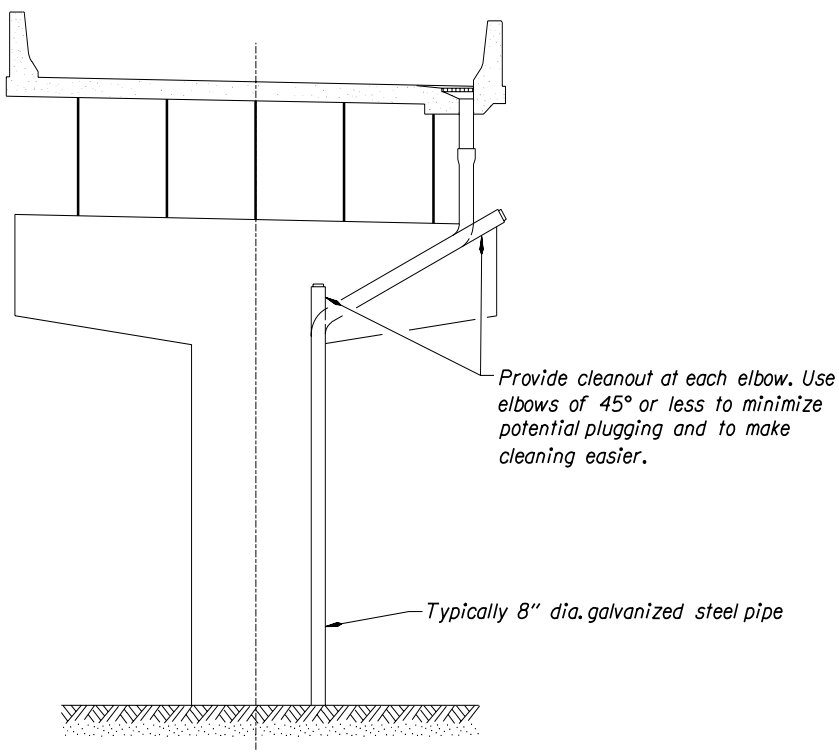

Figure 1.1.20.3A

BACK

1.1.20.3 Deck Drainage - (continued)

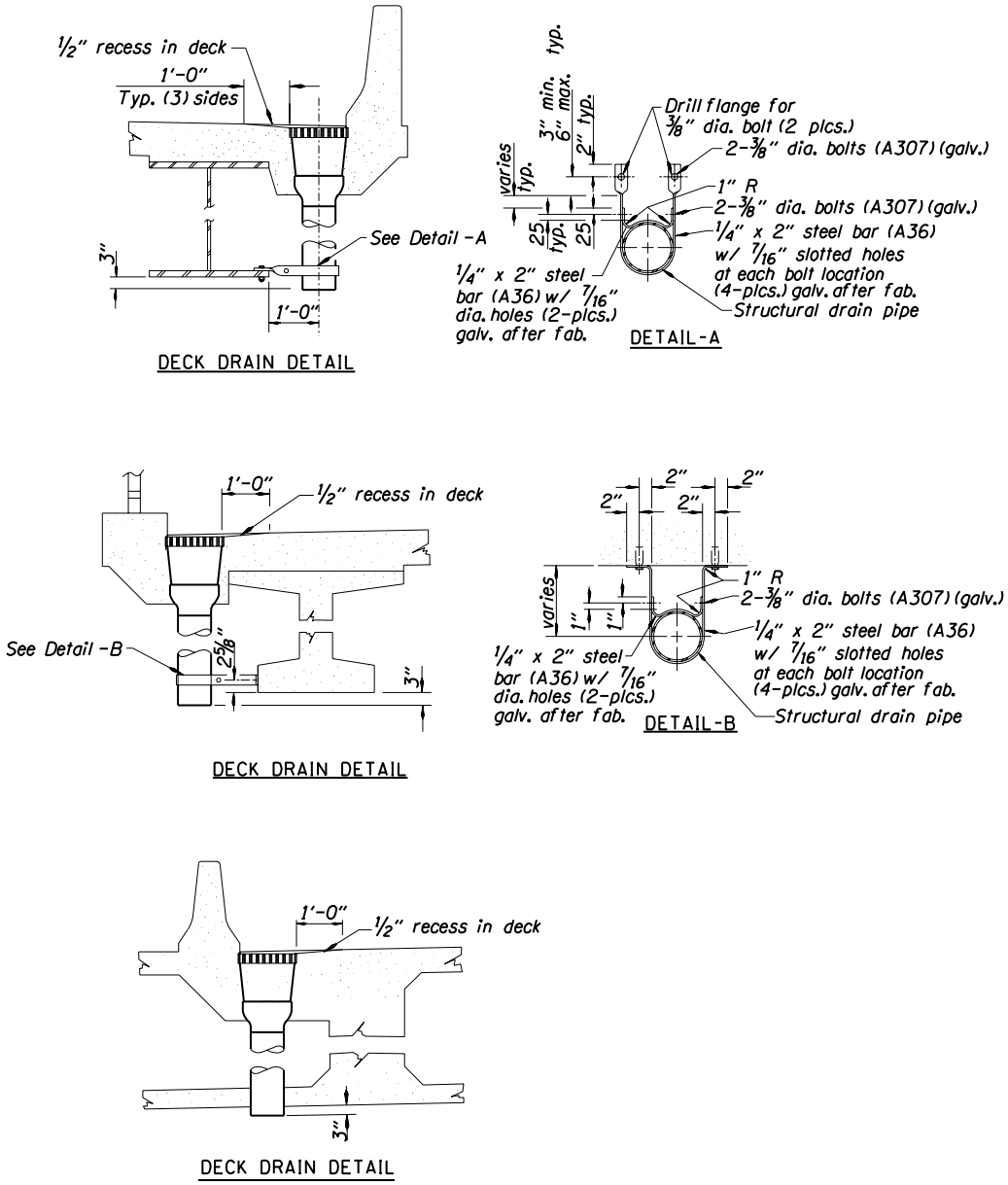

Figure 1.1.20.3B

BACK

1.1.20.3 Deck Drainage - (continued)

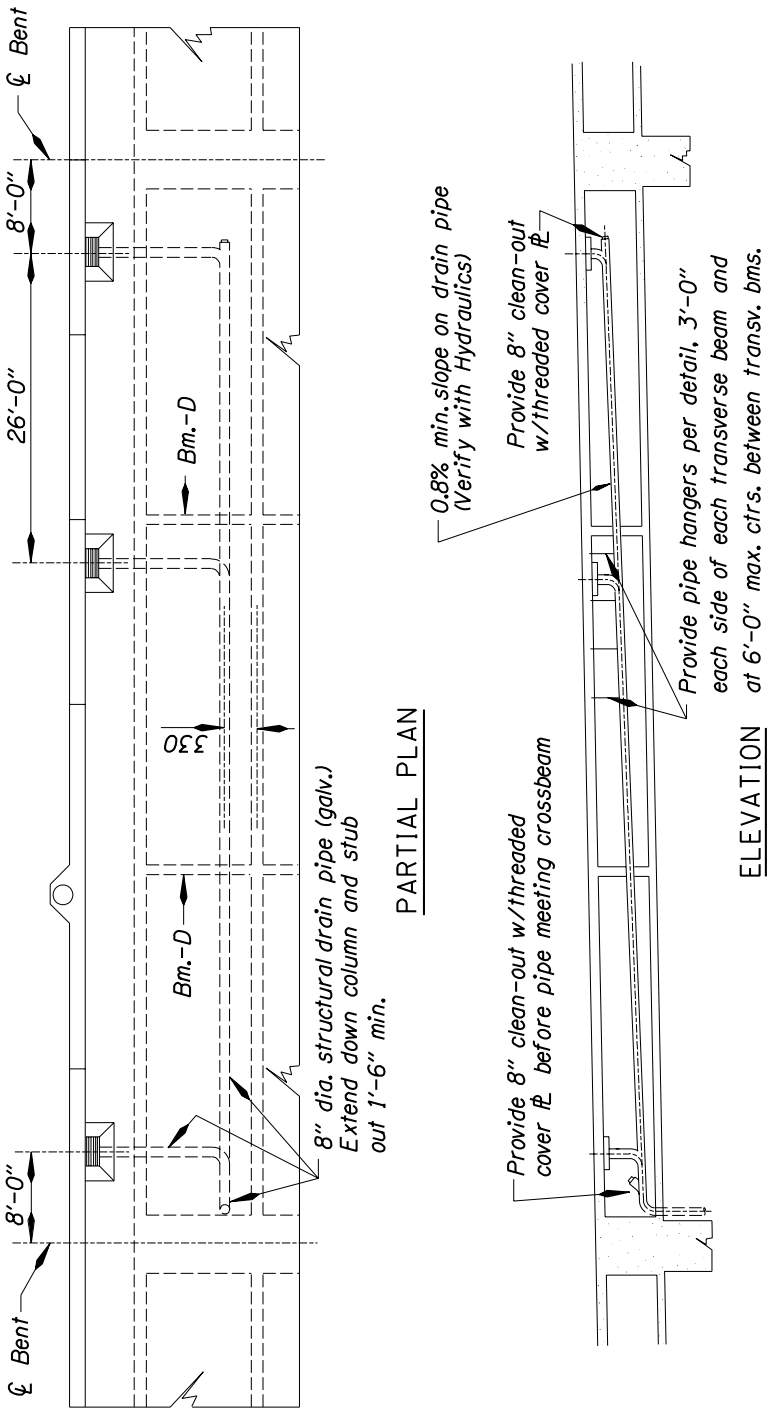

Figure 1.1.20.3C

BACK

1.1.20.4 Deck Screeding

General

Consider deck constructability issues when specifying deck screeding requirements.

If the deck width or skewed dimension causes the length of the screed equipment to be excessive (more than 100'), the deck may need to be placed in stages with or without a closure pour. If staging is shown on the plans, a longitudinal joint should be along a longitudinal beam line and should not fall in a wheel line. The beam layout should take this into consideration.

Also on skewed decks, a sharp vertical curve on the structure may cause problems with screeding on the skew. It may be necessary to perform some unique sequencing, such as preloading the deck with plastic concrete far enough ahead of the screed machine to preload the beams to get unison deflections and allow the screed to run normal to the beams.

Consider whether the finishing machine can follow the actual slope of the roadway in one placement. Deck screeds can accommodate a crown section in one placement, full width, if the superelevation remains constant. If the superelevation rates vary, the deck will normally need to be placed in separate placements. As noted previously, it is best to have a longitudinal joint along a longitudinal beam and beam layout should take this into consideration.

If a structure has different skews at adjacent bents, the skew of the screed equipment should be based on the average of the bent skews.

If a structure is curved with radial bents, the screed equipment and deck placement should remain normal to the roadway centerline. In this case, the screed equipment must be equipped with variable speed capacity at both ends.

Designers should perform enough geometric calculations to determine the best method or direction of deck screeding. When necessary, place the required sequencing and/or direction of screeding, skewed or normal, on the detail plans.

Beams not Supported by Falsework

The main concern of this type of placement is that the beams deflect equally in unison, so deck thickness and clearances end up as shown on the plans. To deflect equally the beams need to be loaded equally. If the structure has a skew, the screed should run on a skew, parallel to the bents.

Add a note to the plans specifying that the screed equipment shall run parallel to the bents.

Falsework Supported Beams

There is less concern regarding how the concrete is placed for falsework supported beams. There will still be a small amount of falsework crush due to the added dead load of the deck. Ideally it would be best to place and screed skewed decks on the skew, but practically it is not required.

BACK

1.1.20.5 Deck Overlays

(1) Introduction - The purpose of an overlay on a bridge deck can be to:

- restore the structural integrity of the deck.
- improve or restore ride ability.
- improve skid resistance.
- improve deck drainage.
- improve deck cross section.

There are 4 overlay systems offered for use on bridge decks. Latex Modified Concrete (LMC) and Microsilica Concrete (MC) are the most common. The third is Flexible Polymer Concrete (PC), which is used in special situations. PC may be used with supervisor approval. The fourth type is a Asphalt Concrete wearing surface (ACWS), with or without membrane waterproofing (site and situation dependent).

LMC and Microsilica concrete, both Portland cement concrete (PCC) based, are considered "structural" concrete overlays. The term "structural" is used to describe an overlay that is rigid enough and thick enough to increase the stiffness of the deck and decrease live load deflections. This increased stiffness should not be included in design because it is dependent upon the bond between the overlay and the deck. Both are typically placed on a bridge deck with a minimum thickness of 1-1/2”.

The other two systems, PC overlays and ACWS, are not considered to be "structural" overlays because they do not add to the deck stiffness. A PC overlay is typically placed on a bridge deck in a thickness of ¼” to 3/8”. An ACWS is too flexible to add to the deck stiffness and is typically placed on a bridge deck with a minimum thickness of 1-1/2”.

(2) Latex Modified and Microsilica Concrete

LMC is a concrete mix with a latex emulsion admixture. The latex emulsion has a milky color and texture and is added during batching. Batching is done in mobile mixers at the job site.

The use of LMC offers many construction advantages. Since the material is batched in a mobile mixer, the pour schedule does not depend upon the concrete plant schedule. Also, the pour is not influenced by the projects distance from the concrete plant. Since LMC is the most common type of structural overlay, the equipment is readily available and many contractors have placement experience.

LMC overlay technology has been used since 1958, and the design life of the material can be predicted from historical data.

LMC does have some disadvantages, however. Placement of the LMC overlay is very labor intensive, increasing construction costs. The rate of construction for an LMC overlay is about 6400 ft^2 to 7400 ft^2 per 8-hour work shift. LMC is also very sensitive to atmospheric conditions which often control not only the pour schedule but the contract time as well. The Designer should review Special Provisions Section 00558 for pouring limitations. Preprints of this section are available from the Specifications Unit. Surface preparation and curing are the most critical factors to achieving a good quality end product and are often the most neglected. Cure time for an LMC pour, prior to restoring traffic, is 96 hours.

BACK

1.1.20.5 Deck Overlays - (continued)

(2) Latex Modified and Microsilica Concrete - (continued)

MC is a concrete mix with a microsilica admixture. Batching is normally done at a batch plant. The use of MC depends on the location of the project and the ability and experience of local suppliers. MC placement is accomplished with more conventional construction methods than a LMC overlay. The Designer should review Special Provisions Section 00559 for MC requirements and restrictions. For the remainder of Section 1.1.20.5, references to a "SC" overlay (structural concrete overlay) apply to both LMC and MC overlays.

(3) Flexible Polymer Concrete

Polymer is a very general term used to classify a wide variety of compounds that chemically combine in a reaction (polymerization). Flexible Polymer Concrete (PC) is a composite material in which coarse aggregate is bound together with the polymer compound. Latex is also a polymer, but is an admixture to Portland cement concrete.

Polymer compounds are formulated in hundreds of different combinations, depending upon the properties desired. The term "flexible" is included in the name to describe the desired characteristic of the bridge deck overlay. Some categories of polymers in use as bridge deck overlays or patching material include:

- Polyester resin systems.
- Methyl Methacrylate resin systems.
- High molecular weight Methacrylate resin systems.
- Epoxy resin systems.

Designers should refer to either the Conditional Products List or the *Qualified Products List* for PC overlay products that are being evaluated for approval or have been approved for use.

The use of PC offers many construction advantages. Flexibility reduces the potential for cracking due to thermal or design load movement. Also, PC is typically constructed in a thickness of ¼" to 3/8" and, therefore, is very light as compared to an SC overlay which has a typical thickness of 1-1/2". This reduction in dead load can be significant on load posted bridges or movable bridges. The construction of a PC overlay is very quick (7200 to 8400 square feet per 8 hour work shift), and the cure time is very short (2 to 4 hours, typically). The short construction time provides a great advantage in time critical urban areas. The bond strength of a PC overlay is typically double that of an SC overlay.

As with SC overlays, the PC overlay has some disadvantages. The deck surface must be dry prior to placement. This provision could influence construction schedules. Also, since the overlay is so thin, buildup for filling wheel ruts or pot holes is more difficult than with SC overlays. Like SC, the curing of PC is very sensitive to atmospheric conditions. The designer should review manufacturer's recommendations for pouring limitations. PC performance may be questionable on routes where high use of chains or studded tires are known to occur. Finally, the PC overlay system is uncommon in the Northwest. Few contractors have placement experience.

BACK

1.1.20.5 Deck Overlays - (continued)

(4) Epoxy Concrete Overlays - The most common polymer used for deck overlays is epoxy.

A typical thin epoxy concrete overlay is constructed by first removing all dirt, debris and latents on the deck surface. This can be accomplished with the use of a high-pressure water blast system, sand blast system or a shot blast system. Since the deck surface must be clean and dry prior to the application of the epoxy mixture, the industry recommends the use of the shot blasting method over the others. Shot blasting leaves the surface dry and vacuumed.

A layer of epoxy compound (a two-part liquid mixture) is spread onto the deck using a squeegee at a rate specified by the manufacturer. The aggregate is then broadcast (also at a specified rate) over the surface and tamped or rolled into place. The excess aggregate is swept off the surface. A second layer, using the same process, is applied according to manufacturer's directions.

The following characteristics and properties should be specified for an epoxy resin base and hardener:

- have a low viscosity.
- be moisture insensitive.
- be a two part epoxy compound.
- contain 100 percent solids.
- be a thermosetting binder system.
- have a minimum tensile elongation of 30 percent (ASTM D638M)
- have a minimum tensile strength of 1500 psi (ASTM C307)
- have a minimum ultimate compressive strength of 8000 psi (ASTM C579)
- be able to cure in 2 to 8 hours to open to traffic.

Aggregates should be specified as:

- 100 percent fractured with at least one mechanically fractured face.
- thoroughly washed and kiln dried.
- aggregate shall have the following gradation:
  - 100 percent by weight passing the No. 6 US STD sieve.
  - 10-35 percent by weight passing the No. 10 US STD sieve.
  - 0-3 percent by weight passing the No. 20 US STD sieve.
- a basaltic type aggregate with 10 percent aluminum oxide content.

BACK

1.1.20.5 Deck Overlays - (continued)

(5) Inspection Report Review - Upon receiving a project assignment, the designer should review the latest bridge inspection report, noting the ratings for the deck, superstructure, bridge rails, deck joints and deck drains. The designer may also need to visit the site for additional information. Corings of the deck should be taken and tested for chloride levels and compressive strength.

(6) Warrants for Overlays - The Designer should use the following overlay criteria and engineering judgment to determine whether an overlay is warranted.

- Bridge deck overlays are not recommended if any of the following conditions are met:
  - The deck condition is rated as a 7 or greater (category 3) in Item 58 of the bridge inspection report. The deck is still in good condition.
  - Delaminated, patched or cracked areas are less than 1 percent of the deck area. The deck is still in good condition.
  - The deck condition is rated as a 4 or less (category 1) in the bridge inspection report. The deck deterioration has become too severe and deck replacement is recommended.
  - Delaminated, patched or cracked areas are greater than 15 percent of the deck area. The deck deterioration has become too severe and deck replacement is recommended.
  - Corrosion has deteriorated the deck to an extreme level or the chloride content in the deck is 2 lbs/yd^3 or higher. Also, both extend down to or past the top mat of reinforcing steel. See "Corrosion Considerations" below.
- Bridge deck overlays are recommended if any of the following conditions are met:
  - The deck condition is rated as a 5 or 6 (category 2). See item 58 of the bridge inspection report.
  - Delaminated, patched or cracked areas are greater than 5 percent but less than 15 percent of the deck area.
  - Delaminated, patched or cracked areas are greater than 1 percent but less than 5 percent of the deck area and the average daily traffic (ADT) is at least 3000.
  - Delaminated, patched or cracked areas are greater than 1 percent but less than 5 percent of the deck area and the structure carries interstate highway traffic.
  - Corrosion has not deteriorated the deck to an extreme level or the chloride content in the deck is less than 2 lbs/yd^3 . Also, neither should extend down to or past the top mat of reinforcing steel. See "Corrosion Considerations" below.

BACK

1.1.20.5 Deck Overlays - (continued)

(7) Corrosion Considerations - The designer should determine whether the structure is in a "marine environment". A marine environment is defined as:

- a location in direct contact with ocean water, salt water in a bay, or salt water in a river or stream at high tide.
- a location within ½ mile of the ocean or salt water bay where there are no barriers such as hills and forests that prevent storm winds from carrying salt spray generated by breaking waves.
- a location crossing salt water in a river or stream where there are no barriers such as hills and forests that prevent storm winds from generating breaking waves.

If the structure is in a marine environment, deck rebar corrosion is visible, or the designer suspects that the structure may be occasionally salted during winter months (against ODOT policy), the designer should discuss the proposed overlay project with the Corrosion Engineer in the Preservation Engineering Unit. Replacement of an existing deck may need to be considered depending upon the extent of chloride content and rebar corrosion. If the maximum acceptable chloride level in the deck has been exceeded, deterioration of the deck rebar will continue regardless of the presence of a new overlay.

ACWS with or without membrane waterproofing

If it is determined that an ACWS is the appropriate overlay solution, determine whether or not membrane waterproofing should be placed on the concrete surface prior to placement of the ACWS. On NHS projects, FHWA requires deck surface protection from top down chloride intrusion. Historically, this protection has taken the form of membrane waterproofing. Reports from field personnel indicate that membrane waterproofing systems, on the QPL , cannot be constructed consistently enough to provide a high level of confidence that the membrane will work or is working.

Site specific factors affect the decision to include membrane waterproofing, provide an alternate protection system or make a case for no protection needed. Factors such as the historical use of road salts in the area, chloride testing of the existing deck, current and potential future route usage or proximity to salt water spray all must be considered.

A possible alternate to membrane waterproofing on prestressed slab bridges is replacement of the structural concrete in the slabs with microsilica concrete. Eliminate the epoxy coated rebar in the prestressed member. Replace in kind, the steel tie rods between the prestressed slabs with stainless steel tie rods.

BACK

1.1.20.5 Deck Overlays - (continued)

(8) Design and Construction Considerations - After determining whether a bridge deck overlay is warranted, the Designer should consider whether a SC overlay, a PC overlay or an ACWS will be used. Typically, one type will be better suited for the project than the other. Some factors to consider are:

- short construction time windows (typically in urban areas) favor a PC overlay or an ACWS over an LMC overlay due to speed of placement and cure time.
- dead weight critical structures favor a PC overlay over a SC overlay or an ACWS because of their thin, lightweight nature.
- deck requiring extensive buildup due to grade corrections or wheel rutting favor a SC overlay or an ACWS over a PC overlay due to the difficulty in building up a PC overlay.
- the construction budget. If the initial cost is a major consideration, ACWS is the least expensive. A MC overlay is about 4 times as expensive as the ACWS and a PC and LMC overlay is about 4½ times as expensive as the ACWS. These values are general since the cost of the various overlays will vary with the location of the project. If the long-term life cycle cost is considered, then a SC overlay may be the most economical.
- length of structure. If an overlay project contains a short structure (less than 100 feet long) within the limits of new asphalt concrete pavement, it is more economical to place an ACWS with or without membrane waterproofing on the bridge deck. This assumes that other design considerations have been satisfied.
- Region/Project Manager's experience. During the TS&L design phase, check with Region to see if they have a preference between the different types of overlays.
- SC and ACWS overlays need elastomeric concrete nosings or armored corners at the bridge ends and joints. It may be possible to place a PC overlay and not do any work to the joints.

The Designer should check the structure for the possibility of a bridge rail and/or bridge rail transition retrofit or replacement, deck joint repair or replacement, the addition of reinforced concrete end panels, the addition of protective fencing, the need for scour protection, seismic retrofit and bearing repair.

The following chart provides some guidance for selecting an overlay type based on design criteria.

DESIGN CRITERIA	ACWS	PC	SC
Economy - Initial Cost - Long Term Cost	X		X
Construction Time – Fastest	X	X	
Grade Correction or Buildup Required	X		X
Dead Load Limitations		X	
Deck Sealer for Corrosion Protection		X	X
Proven Longevity			X
Contractor Familiarity	X		X
Low Traffic Volumes	X		
Deck Crack Sealer		X	

BACK

1.1.20.5 Deck Overlays - (continued)

(8) Design and Construction Considerations - (continued)

During the overlay selection process, the structure's "As Constructed" plans should be reviewed, paying special attention to the following items:

- Effect of Additional Dead Load - Typically the dead load from a 1-1/2" concrete overlay has little effect on the capacity or operation of the structure. Exceptions to this are load posted bridges or movable bridges, where a SC overlay's dead load may have a significant impact. A PC overlay may be required.

- Existing Bridge Rail - The existing bridge rail should be reviewed for functional adequacy and replaced if unacceptable. The Designer should review the Bridge Design Manual Practice for Bridge railing to determine this. The rail geometry, roadway geometry, ADT and rail accident history should be reviewed in order to determine whether the rail should be replaced. ADT information can be found in the Traffic Volume Tables. The accident history can be found in the Maintenance file for the structure or through the Traffic Section. The dimension from the top of the rail to the overlay finish grade should be checked to make sure that the minimum rail height is still met.

- Deck Joints - Deck joints should be cleaned and repaired (if necessary) prior to placing the overlay. Review the Bridge Inspection Report or field notes for information to determine if any deck joint work is needed. Additionally a field trip may be necessary in order to determine the best type of joint repair or replacement. See Standard Joint Drawings for typical deck joint reconstruction details. See special provisions 00585 for expansion joints and 00586 for concrete repair if needed.

- Elastomeric concrete nosing is recommended for LMC or MC overlays, because of the high incidence of debonding at expansion joints or at bridge ends. See special provision 00584 for specifications developed for concrete nosing.

- Deck Drains - Existing deck drains should be noted on the overlay plan view. Generally, deck drain grates should be raised to match the new deck surface. For a PC overlay, the existing deck drain taper is adequate.

- Bridge End Panels - The need for bridge end panels can be confirmed by reviewing the current Bridge Inspection Report and the Maintenance file records. A field trip may be necessary to determine whether or not adding end panels to the structure is the best choice to minimize pavement cracks and/or settlement at the bridge ends.

  Bridges constructed after 1960 generally have paving ledges at the bridge ends, even though end panels were not installed at the time of construction. For older bridges, without paving ledges, or for bridges with paving ledges that are too small, new corbels will need to be detailed to provide support for the proposed bridge end panels.

  Traffic restrictions may require staging of the end panels or the use of Type III cement (high-early strength concrete) to accelerate construction times.

The Designer should check for the presence of an existing overlay or wearing surface. If one is present, note what material type it is. Also, the Designer should check for the presence of an existing waterproof membrane. This information is used in estimating unit costs for Deck Preparation.

BACK

1.1.20.5 Deck Overlays - (continued)

(8) Design and Construction Considerations - (continued)

The Designer should check the latest statewide priority list for protective fence projects. If the proposed structure (to be overlayed), is also on the protective fence list, it is more cost-effective to combine the projects (due to temporary direction and protection of traffic and engineering costs). If a project has been programmed for a deck overlay only, and the Designer determines that additional work items are warranted, a letter should be sent to Region describing the extra work and the extra cost. A request to add this work to the project should be made at this time.

Variable SC Overlay Depths:

On LMC overlay projects, where overlay depths are expected to be greater than a nominal 1-1/2", the following guidelines should be used:

- For a depth up to 4": use a full depth SC overlay.
- For a depth of 5" to 6": use either a full depth SC overlay and add temperature reinforcing steel or place Class 4350-3/4 concrete up to the lower limit of Class 1 deck preparation. Then use an LMC overlay up to finish grade.
- For a depth greater than 6": place Class 4350-3/4 concrete up to the lower limit of Class 1 deck preparation, then use a SC overlay up to finish grade.

(9) Construction Scheduling - LMC requires a 4 day cure time. MC requires a 7 day cure time. If traffic must be returned to the newly poured overlay before the cure time is complete, either the specification of Type III cement (high-early strength cement) or a Polymer Concrete overlay or an ACWS may need to be considered. Type III cement typically reduces the traffic restoration time from 96 hours to 24 hours. LMC with Type III cement does require a different mix design and may have a greater potential for cracking. It should not be used unless necessary for traffic considerations.

(10) TP & DT/Stage Construction - Temporary protection and direction of traffic (TP & DT) requirements are important design considerations and could control project cost, project scheduling and even the type of overlay. Urban projects or narrow roadway width structures may require very short overlay cure times that could eliminate the use of a SC overlay entirely. The Designer should discuss traffic control issues early in the project with both Region and the Traffic Control Designer.

When stage construction is proposed, the Designer should arrange the stage construction widths so that the overlay can be constructed in widths between 6' and 30' which are comfortable widths for SC overlay finishing machines and placement of PC overlays and ACWS. The Designer should avoid placing longitudinal construction joints in the wheel paths.

BACK

1.1.20.5 Deck Overlays - (continued)

(11) Quantity Estimates - A typical LMC overlay for a bridge deck consists of the following structure bid items:

- Class 2 or 3 deck preparation (per yd^2)- if needed
- Furnish concrete overlay (per yd^3)
- Construct SC Resurfacing (per yd^2)

Class 1 Deck Preparation - Requires deck concrete removal to a normal depth of ¼" and a maximum depth of ½" below the existing concrete surface. Payment includes removal of the existing ACWS. Unit costs typically include one pass for asphalt removal. If the structure's ACWS is too thick to be removed in one pass (i.e. greater than 2"), the Designer should increase the unit cost for the additional passes required. Core samples may need to be taken to determine the ACWS thickness. The Designer should indicate in the Special Provisions whether an existing waterproof membrane is present. Waterproof membrane is more difficult to remove and increases the unit cost of Class 1 Deck Preparation. If the existing wearing surface or overlay on top of the deck is not asphalt, but some other material such as SC or PC, the correction should be indicated in the Special Provisions for the project and the unit cost adjusted up or down accordingly. Deck preparation area should be calculated from gutter to gutter and end joint to end joint dimensions. No measurement of Class 1 preparation is require since it is paid under Construct SC Resurfacing.

Micro-cracking of the deck surface due to existing wearing surface or overlay removal with heavy impact machines (such as a Roto-mill) is believed to cause overlay delamination problems. Currently, the Roto-mill is only allowed to remove flexible material such as asphalt, if the thickness is 1" or greater. Hydro-demolition or Diamond grinding is required to remove both rigid materials such as SC or Portland cement concrete and stress transferring materials such as a thin PC overlay.

Furnish Concrete Overlay - The quantity is calculated from the Class I deck preparation quantity and a depth of ½" greater than the specified minimum depth. This increase accounts for field quantity overruns due to minor grade corrections and irregular Class 1 deck preparation. If the Class 2 deck preparation has been identified, add that quantity into the "Furnish Concrete Overlay" total.

Construct SC Resurfacing - This quantity is typically the same as the Class 1 deck preparation quantity and includes Class 1 deck preparation.

A typical PC overlay for a bridge deck consists of the following structure bid items or bid items similar to these. Check with the specifications writer for the most current item names and units:

- Deck Preparation (per yd^2)
- Furnish PC concrete overlay (per yd^3)
- Construct PC concrete overlay (per yd^2)

BACK

1.1.20.5 Deck Overlays - (continued)

(11) Quantity Estimates - (continued)

Deck Preparation - PC overlays do not require Class 1 deck preparation (as defined for a SC overlay), but do require an asphalt-free deck prior to cleaning and PC construction. An asphalt-free deck can be achieved through methods prescribed in the special provisions. Deck cleaning will typically be done either by high pressure water blasting, sand blasting or shot blasting. Full compensation for providing an asphalt-free deck and deck cleaning is paid for under this bid item.

Furnish PC concrete overlay - This quantity is calculated from deck area (gutter to gutter and end joint to end joint) and a depth of 1/8" greater than the specified nominal depth.

Construct PC concrete overlay - This quantity is calculated from the deck area (gutter to gutter and end joint to end joint).

A typical ACWS for a bridge deck consists of the following bid items:

- Membrane waterproofing (per yd^2 if needed)
- Asphalt concrete mixture (per ton) - Roadway Engineering Section's responsibility.

The Membrane Waterproofing bid item includes full compensation for the removal of any existing asphalt concrete, applying the membrane waterproofing system and the asphalt tack coat. If there is an existing membrane waterproofing system on the bridge deck, this should be noted in the projects Special Provisions and removal paid for under this bid item. Bridge Section's design cost data for this bid item is typically for a new bridge deck without any existing material removal required. Increase the recommended unit cost by 10-15 percent to reflect the increase for material removal.

The asphalt concrete bid item is typically the responsibility of the Roadway Designer. Communicate with the Roadway Designer to make sure all the bid items are covered.
In addition to these bid items, the following items may also be required:

- For SC overlays - "Class 2 deck preparation" (per yd^2)
- For SC overlays - "Class 3 deck preparation" (paid on an extra work basis)
- For PC overlays and ACWS - "Deck repair" (per yd^2)
- Deck joints (each or linear feet)
- Deck drain construction (each)
- Bridge rail retrofit or replacement (linear feet)
- Reinforced concrete end panels (per yd^2)

BACK

1.1.20.5 Deck Overlays - (continued)

(11) Quantity Estimates - (continued)

Class 2 Deck Preparation (SC overlays only) - Class 2 Deck Preparation is usually a result of deck delamination with the bottom half of the deck still sound. It requires the removal of the deck concrete from the limits of Class 1 Deck Preparation down to a maximum of one half of the deck slab thickness. The existing rebar is to be cleaned and retained or replaced if damaged. Class 4350-3/4 concrete is poured up to the lower limit of Class 1 Deck Preparation. Field personnel should be consulted when estimating a final quantity. For a preliminary estimate, 10 percent of the deck area can be used as a rough quantity estimate if some Class 2 Deck Preparation as anticipated.

Class 3 Deck Preparation (SC overlays only) - Class 3 Deck Preparation is usually required due to severe deep delaminations, a severely cracked deck in all directions, a badly spalled bottom deck or poor aggregates. It requires full deck removal and replacement with Class 4350-3/4 concrete up to the lower limit of Class 1 Deck Preparation. It is performed on an extra work basis and is included in the estimate as an anticipated item (not a bid item). Field research should indicate a high probability of Class III Deck Preparation before including this as an anticipated item. The designer should seek field advice when estimating a quantity for Class 3 Deck Preparation.

Deck Repair (PC overlays and ACWS only) - This bid item is similar to the Class 2 Deck Preparation bid item for an LMC overlay. The Deck Repair bid item includes removal of all unsound concrete to the maximum limits of one half of the deck thickness as directed by the Engineer, disposing of the material removed, cleaning and retaining existing rebar (including existing epoxy coating on rebar) and replacing the void with an approved Portland cement concrete patching material. Consult the Region Bridge Inspector, Bridge Maintenance or the *Qualified Products List* for recommendations on patching products.

If the existing deck has an overlay or wearing surface, the need for partial depth deck removal may not be apparent. If there isn't an indication of deck removal required (for a preliminary estimate) use 10 percent of the deck area as requiring partial depth removal (down to one half the deck slab thickness). During the Final Design Stage, contact the Region Bridge Inspector or Bridge Maintenance for guidance on the actual extent of deck repair anticipated.

If removal of unsound concrete exceeds the limits of the Deck Repair bid item, pay for additional work on an extra-work basis. If the Designer suspects extra work will be necessary, make an estimate of the cost and include it as an anticipated item.

All loose or deteriorated concrete must be repaired to ensure a well bonded and crack-free overlay. If the concrete deck has extensive cracking in which water intrusion is a concern, place a polymer crack sealer compatible with the PC overlay prior to the PC overlay. Seal cracks that are 1/16” or wider. If the cracks are "working" or active with live load movement, sealer will not solve the problem and a more involved analysis will be needed. Include compensation for crack sealing under the Deck Repair bid item.

BACK

1.1.20.5 Deck Overlays - (continued)

(12) Preparing Plans and Specifications - Typical bridge deck overlay plans include a plan view, location map and general notes if needed and miscellaneous details as required. The plan view should include the following:

- Plan view of the structure with the bridge railing.
- Bent numbers, stationing and skews (if any).
- Span lengths.
- Roadway widths.
- Detail reference notes indicating work to be done.

Detail reference notes should indicate the work required such as the construction of the overlay and may also include:

- construction of end panels.
- construction of paving ledges.
- deck drain locations raising.
- expansion joint work.
- bridge rail retrofit or replacement.
- bridge rail transition retrofit or replacement.
- protective fencing.
- stage construction (coordinate with the Traffic Control Plans Unit).

Miscellaneous details may need to be added to clarify the work to be done in specific areas. These details can be placed on the plan sheet or a second sheet if more space is required.

If stage construction is used, temporary concrete barrier may be required on the bridge deck. Check with the Traffic Control Designer for recommendations. See BDDM section 1.1.21.4 for temporary barrier detailing and anchorage requirements.

The "Designer's Notes to Specifications" should indicate under which bid item the miscellaneous details are to be paid for. Expansion joints and deck drain work may be paid for under the bid item for overlay construction if the cost is minor. End panels, Paving ledges, Bridge railing and protective fencing will need separate bid items.

BACK

1.1.20.6 Deck Construction Joints

The number of deck construction joints should be minimized to avoid potential leaks through the deck. However, it is often necessary to provide deck construction joints to avoid shrinkage or deflection cracking.

Normally for non-continuous spans, deck concrete placements should be full length or stopped at a transverse beam. The construction joint surface is normally vertical and should be roughened, according to Section 00540.43(a) of the Standard Specifications, between placements.

For continuous spans or for emergency situations, provide a shear key with a roughened surface between placements. Typical key details should be shown on the plans as detailed below.

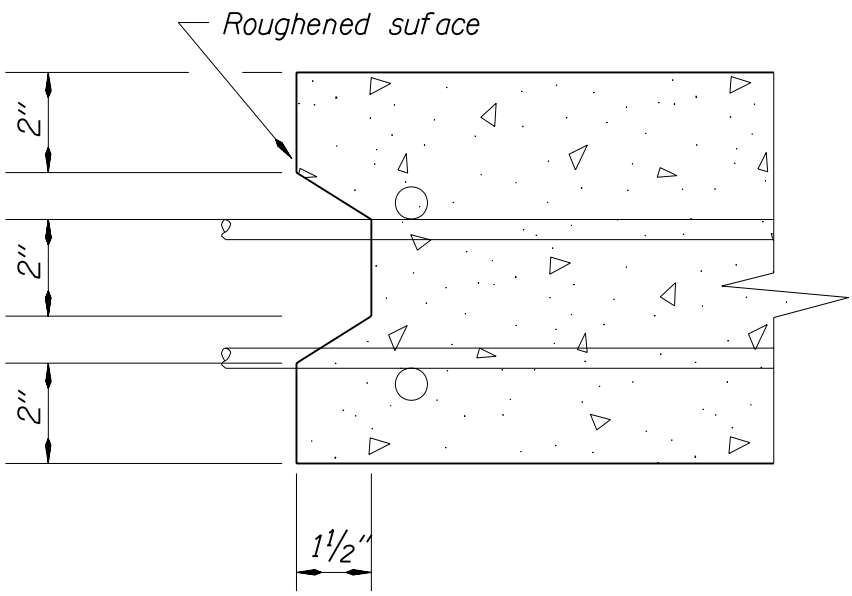

Figure 1.1.20.6A

1.1.21 Bridge Rail

1.1.21.1 Rail Selection

(1) Rail Selection, General - For new and widening projects, use the *AASHTO Guide Specifications for Bridge Railings (1989)* to determine the required bridge rail. The *Guide Specifications* are used because they are likely to become the basis for revisions to the standard specifications and be required by FHWA for federally funded projects. The *Guide Specifications* have two criteria for accepting bridge rails:

- Rails should be crash-tested to confirm the rail is structurally adequate and the vehicle trajectory after collision is acceptable (see "Note A" following the footnotes for the Standard Rail Table).
- Bridge rails should be selected based on the site performance needs to account for occupant risk (see example calculation following the discussion of this section).

By August of 1998, the FHWA requires all rails used on federally funded projects to meet the testing requirements in NHRCP Report 350 for TEST LEVEL 3 (TL-3) or higher.

The following are the current bridge rail standards:

Dwg. No.	Description	Crash Tested	Performance Level	App. FA Proj.
BR200	Concrete Bridge Rail, Type F	Yes	PL-2 (TL-4)	Yes
BR203	Transition to Conc. Br. Rail Type F	Yes(1)	PL-2	Yes
BR206	Two-Tube Curb Mount Rail	Yes	PL-2 (TL-4)	Yes
BR208	Three-Tube Curb Mount Rail	Yes	PL-2 (TL-4)	Yes
BR209	Transition to Three-Tube Rail	Yes	PL-2 (TL-4)	Yes
BR213	Transition to Two- Tube Rail	Yes(1)	PL-2	Yes
BR216	Sidewalk Mounted Combination Rail	Yes	PL-2 (TL-4)	Yes
BR220	Flush Mounted Combination Rail	Yes	PL-2 (TL-4)	Yes
BR226	Two-Tube Side Mount Rail	Yes	PL-2 (TL-4)	Yes
BR233	Thrie Beam Rail and Transition	Yes(3)	PL-1 (TL-2)	Yes
BR263	Median Barrier, Type F	No	PL-2 (TL-4)	Yes
BR266	Modified Type 2A Guardrail (5)	Yes	PL-1 (TL-2)	Yes
BR240 &BR241	Protective Fencing	NA	NA	Yes
BR246	Pedestrian Rail	NA	NA	Yes
BR250	Pedestrian Rail on Sidewalk Mounted Concrete Parapet	No (7)	(PL-2)	(7)
BR253	Sidewalk Mounted Concrete Parapet w/Chain Link Fencing	Yes	PL-2 (TL-4)	Yes
BR256	Pedestrian Rail on Type F Concrete Bridge Rail	Yes(6)	PL-2 (TL-4)	Yes
BR260	Chain Link Fencing on Type F Concrete Bridge Rail	Yes(6)	PL-2 (TL-4)	Yes
BR270	Rail Transition Dtls. Flex Beam Rail Curb and Parapet Rail	Yes(6)	PL-2	Yes
BR273	Thrie-Beam Rail Retrofit for Curb and Parapet Rail	Yes(6)	PL-2 (TL-4)	Yes
New	Texas 411 Aesthetic Concrete Baluster	Yes	PL-1 (TL-2)	Yes
New	Texas C411 42" Concrete Baluster	Yes	PL-1 (TL-2)	Yes

BACK

1.1.21.1 Rail Selection - (continued)

(1) Rail Selection, General - (continued)

Footnotes for Standard Rail Table:

(1) Similar to a transition that has been tested.

(3) A scaled-down version of the side-mounted rail was successfully crash-tested. ODOT's rail has FHWA approval because it was shown analytically to react as the crash tested version.

(5) This guardrail is intended for mounting on a concrete slab on top of RCBC when the fill height is less than the standard post embedment and when spanning the box is not possible (see Figure 1.2.19.1A).

(6) These combination rails were developed to be used next to a bike lane/shoulder combination. The concrete rail was tested without the pedestrian rail addition. Our judgment is that further testing is not warranted.

(7) These combination rails are different than what was crash-tested. A 24" vertical concrete parapet with a single horizontal steel rail on top was successfully crash-tested at the back of a curbed sidewalk. Although these combination rails are different, it is believed they will perform adequately. They may be used when the design speed is 35 mph or less (see "Note B" below). For design speeds greater than 35 mph, FHWA approval is on a case-by-case basis.

Note A: Minor changes may be made to crash-tested rails in order to meet a specific need. Changes must maintain the rail's crash worthiness.

Note B: Rails need not be crash-tested when:

- Not on federal-aid projects, and
- Design speeds are 35 mph or less, and
- Rail is mounted on back of a raised sidewalk (5' minimum width) with a barrier curb (8" minimum height), and
- Rail is structurally adequate based on loading conditions of AASHTO *Standard Specifications for Highway Bridges* Article 2.7 (i.e. 10 kips) or LRFD Section 13.

Note C: When design speeds exceeds 40 mph, provide a traffic rail at the traffic face of the sidewalk.

BACK

1.1.21.1 Rail Selection - (continued)

(2) Vehicular Railing

- Standard Concrete Type "F" Bridge Rail - The Standard Type "F" rail is generally the best performing rail. It is generally used where there is high-speed, high-volume traffic, where the structure is on a curve and generally on all interstate and State highways. It should also be used between a sidewalk and traffic when the design speed is greater than 40 mph. Interference with sight distance from interchange ramps or crossroads should be checked. Avoid concrete rail in areas where drifting snow might create a problem. Tubular railing may be preferred in scenic areas where concrete rail would otherwise be indicated.

  The ¼" preformed expansion joint filler through the rail forms a joint which is provided to reduce shrinkage cracks in the rail and reduce the tendency of the rail to act compositely with the superstructure. Place joints at bents and at 15' centers between bents. The location of each joint should be shown on the deck plan, but need not be dimensioned.

  Concrete bridge rails are usually constructed vertical or plumb and not normal or perpendicular to the deck. Joints and architectural treatments are also usually constructed or placed plumb.

- Two and Three Tube Curb Mounted Rails – These are a good performing rails that can be used instead of the Type "F" rail when "see-through" is desired. Even though these rails are acceptable in most applications, FHWA recommends (and we agree) the use of Type "F" rail on high speed and limited access highways. It is better at redirecting errant vehicles and requires less maintenance. These tube rails currently have a TL-4 rating. Crash testing to qualify these rails to the TL-4 level was completed in 1998 for the Two-Tube and in 2000 for the Three-Tube rail.

- PL-3 (TL-5) Railing - At the present time, ODOT does not have standard rails which have met PL-3 (TL-5) requirements. Rails successfully tested for PL-3 (TL-5) are a 42" high Type "F" concrete rail and a 42" high vertical face concrete rail. If you have a location requiring a PL-3 (TL-5) rail, consult the Bridge Engineering Section Rail Specialist.

- 42" Single-Slope Concrete Barrier - This is still considered an experimental rail that will be used on selected Federal-aid projects as directed by the Regions. It is acceptable as either a median or shoulder barrier. If a project has this type of shoulder barrier on the roadway, consider using a single slope matching rail on the structure. FHWA has recommended using a 42" high "F" Rail instead of the single slope barrier.

- Aesthetic Concrete Baluster - This is a decorative rail developed by Texas. It was crash-tested to the TL-4 level and failed.

- Standard Thrie Beam Rail - The last steel post may need to be side mounted on to a thickened section of the end panel to accommodate the 3'-1-1/2" space between the last steel rail post and the first timber post in the transition. If end panels are not used, the end bent or wingwalls may need to be extended or adjusted to accommodate the last side-mounted steel post.

- Timber Rail - Timber should generally not be used for longitudinal members for either temporary or permanent railing. When a timber rail is desired for architectural reasons (as in a park), a steel-backed timber rail may be acceptable. A glued laminated timber rail has been successfully crash-tested for PL-1 (TL-2) criteria.

BACK

1.1.21.1 Rail Selection - (continued)

(3) Loads

When the factor "C" is required for rail post design in the AASHTO Standard Specifications for Highway Bridges, use it when designing the adjacent deck reinforcement and the connection of the post to the deck.

(4) Bicycle and Pedestrian Railing - Use bicycle and pedestrian railing on the outside of structures that:

- are specifically designed to carry bicycle and/or pedestrian traffic.
- have bicycle and/or pedestrian traffic separated from the roadway by a vehicle rail (see "Note C" located at the end of subsection 1.1.21.1(1), "Rail Selection, General").

Currently the Standard Protective Fence is our only standard drawing that meets the AASHTO requirements for bicycles (54" height). The Standard Protective Fence and Standard Pedestrian Rail meet the AASHTO requirements for pedestrians (42" height).

Curbs - Curbs (normally 6") above the level of the sidewalk should be used under all pedestrian railings where there will be significant pedestrian, vehicular or boat traffic under the structure.

(5) Combination Rails - Combination rails are rails that provide protection to both vehicles and bicycles or vehicles and pedestrians.

Neither AASHTO nor FHWA have clear specifications concerning acceptance criteria for combination rails. The following recommendations should provide reasonable safe protection:

- Combination rail should be crash-tested to the performance level requirements of the site, except as indicated in "Note B" above.
- Combination rails should not have any opening such that a 6" sphere can pass through any opening to a height of 24".
- Combination rails on the back of sidewalks for pedestrians only (no bicycles) shall be 42"high (min).
- Combination rails on the back of sidewalks for pedestrians and bicycles may be 42" or 54" high. These rail should be determined on a case by case basis depending on bicycle/pedestrian use.
- Combination rails may be 42" or 54" high (and in some cases 32") where bicycles share the shoulder. These rails should be determined on a case-by-case basis depending on site location and bicycle use.

BACK

1.1.21.1 Rail Selection - (continued)

(5) Combination Rails - (continued)

Available combination sidewalk/traffic rail:

- Standard Drawings BR250 and BR253 - These provide a 32" high vertical face concrete parapet with pedestrian rail or chain link fence on top at the back of a raised sidewalk (54" and 56" rail heights). These rails have not been crash-tested and should be only be used on a case-by-case basis in locations behind a raised sidewalk at least 5' wide where the design speed is 35 mph or less.

- Standard Drawings BR216 and BR220 - A single steel tube mounted on a 24" vertical parapet (42" rail height). This rail has been crash tested to PL-2 (TL-4) requirements.

Available combination bicycle/traffic rail:

- Standard Drawings BR 256 and BR260 - These are Type "F" concrete rail with pedestrian rail or chain link fence on top (54" and 56" rail heights). The Type F concrete rail has been crash tested to PL-2 (TL-4) requirements. Our judgment is that further testing (with the additions on top) is not warranted.

- Standard Drawing BR240- This combines a Type "F" concrete rail, and a two-tube rail with a protective fence mounted behind it. The Type F concrete rail has been crash tested to PL-2 (TL-4) requirements. The two-tube rail is scheduled to be tested at the TL-4 level. Our judgment is that further testing (with the protective fence additions) is not warranted.

- Standard Drawings BR216 and BR 220 - Two-tube rail mounted on a 24" vertical parapet is currently being developed (42" rail height). The single-tube rail has recently been crash-tested to PL-2 (TL-4) requirements. Our judgment is that further testing (with the additional rail on top) is not warranted.

BACK

1.1.21.1 Rail Selection - (continued)

(6) Rails Over Low Fill Culverts

Standard Drawing BR266, Modified Type 2A Guardrail, is for use when the fill height above a box culvert or rigid frame is less than the standard embedment of timber guardrail posts. This design is the same as the system which was successfully crash-tested by TTI recently and was reported in the Transportation Research Record 1198. During the test, the steel posts yielded about 32", which is similar to our timber post system. Using this method eliminates the need for transitions, which are required because the steel post bridge rail is normally a rigid connection. The crash test report claims this system is acceptable for fill heights from 0 to 3'.

For culverts under 18', one or two posts can now be eliminated from a normal W-beam guardrail installation (post spacing at 6'-3") by using two nested W-beam elements (see attached details). This design has been successfully crash-tested and can now be used on Federal-aid projects.

Detail A, shown below, is an acceptable method for continuing guardrail over areas where a 12'-6" guardrail span, that contains no posts, is necessary. Detail B, shown below, is an acceptable method for continuing guardrail over areas where a 18'-9" guardrail span, that contains no posts, is necessary.

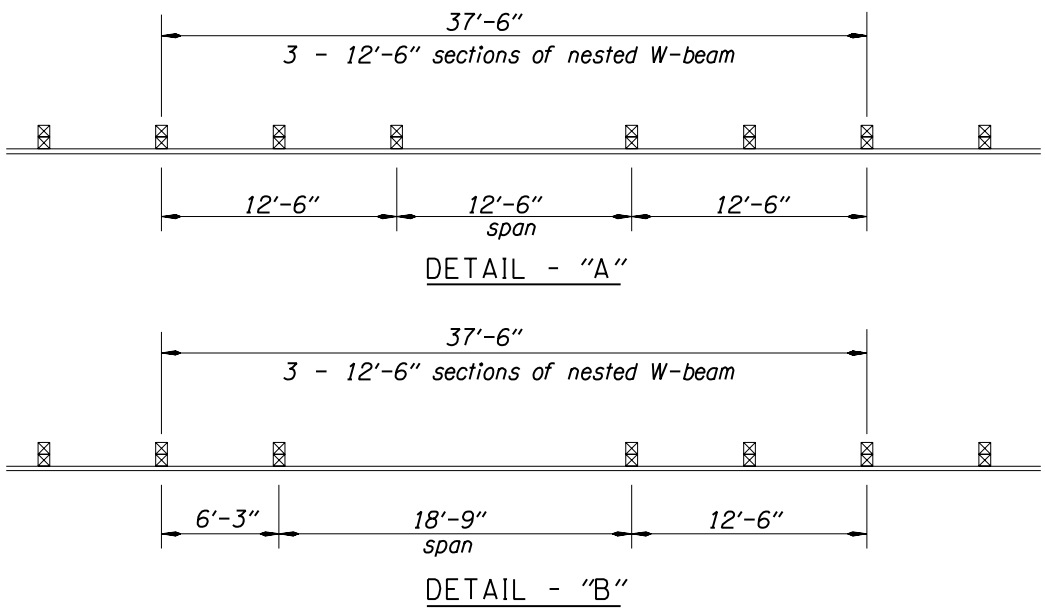

Figure 1.1.21.1A

1.1.21.1 Rail Selection - (continued)

EXAMPLE CALCULATIONS - Page references in these examples refer to the AASHTO *Guide Specifications for Bridge Railings, 1989*.

The required performance level is taken from Table G2.7.I.3B on pages 5 to 9, based on Design Speed, Percent Trucks, Bridge Rail Offset and Adjusted ADT. Adjusted ADT is calculated by multiplying the design ADT by factors for grade (K_g), degree of curvature (K_c) and height above understructure surface (K_s).

Example 1

Highway Type = two-lane, two-way
Design Speed = 50 Percent Trucks = 10 Bridge Rail Offset* = 4'
Estimated Const Yr ADT = 4000

Grade = -1% Kg = 1.0 (Fig. G2.7.1.3A, page 11)
Degree of curvature = 0 (tangent) K_c = 1.0 (Fig. G2.7.1.3A, page 11)
Height above water < 10' deep = 30' K_s = 0.8 (Fig. G2.7.1.3.B, page 12)
Adjusted ADT = (4000)(1.0)(1.0)(0.8) = 3200

On page 7, find line with 10 percent trucks and Bridge Rail Offset 3-7. Use column headed "Undivided with Four Lanes or Less". Since 3200 lies between 0 and 3.7×10^3, PL-1 (TL-2) is adequate.

Example 2

Highway Type = one-lane, one-way ramp
Design Speed = 50 Percent Trucks = 10 Bridge Rail Offset * = 10'
Estimated Const Yr ADT = 3100

Grade = -4% K_g = 1.5
Degree of curvature = 5 K_c = 3.0 (for outside of curve)
Height above high occupancy land = 40' K_s = 1.5

Adjusted ADT = (3100)(1.5)(3.0)(1.5) = 20 900

On page 7, in column headed "One Way", 20.9 lies between 3.6 and 35.3, therefore PL-2 (TL-4) is adequate.

Example 3

Same as Example 2 except Percent Trucks is 15.
20.9 is greater than 20.6, therefore PL-3 (TL-5) is required.

* Bridge Rail Offset = Travel Lane to Face of Rail

BACK

1.1.21.2 Bridge Rail Retrofit Guidelines

(1) The Primary Purpose of the Bridge Rail

- to keep errant vehicles from driving off the edge of the bridge
- to smoothly redirect an impacting vehicle

(2) Acceptance Criteria of Bridge Rails

With the above stated purpose the AASHTO *Guide Specification for Bridge Railings* has set the following acceptance criteria for rails on **new bridges**:

- Rail designs should be crash tested to confirm that the rail is structurally adequate and the vehicle trajectory after collision is acceptable.
- Bridge rails should be selected based on the site performance needs.

Although AASHTO has not set acceptance criteria for retrofitting existing substandard rails it is recommended that the AASHTO Guide Specification criteria be used as a starting point.

For 3R and preventive maintenance projects on the NHS, FHWA requires bridge rails and transitions to be replaced unless they meet the criteria in NCHRP Report 230 (PL-2 or higher). Rails that do not meet the NCHRP 230 standard should be replaced or retrofitted with a NCHRP 350 compliant rail or retrofit. Some installations may require an exception; such as when the deck cannot support the added load, the bridge is scheduled for replacement in the current STIP, or for other reasons in the public interest.

(3) Identifying Deficiencies of Existing Bridge Rails

a. **The bridge rail must be strong enough to prevent penetration.** Most rails properly designed after 1964 will be strong enough to contain an impacting vehicle while those designed prior to 1964 are typically **structurally inadequate**. The structural adequacy of a rail is based on loading conditions of *AASHTO Standard Specifications for Highway Bridges* Article 2.7 (10 kips), LRFD Section 13, or a crash test. For bridge rail retrofit on a bridge designed under the *Standard Specifications for Highway Bridges*, 17th Edition or earlier, the 10 kip horizontal load should be applied when checking the adequacy of the rail and existing deck in accordance with 17th edition article 2.7.1.3 and 3.24.5.2, in particular if the bridge is historic. It should be noted that all aluminum tube rails are structurally inadequate.

b. **The bridge rail must safely redirect errant vehicles.** Geometric features of rails that may produce high deceleration forces or cause a vehicle to roll over after impact are termed **functionally obsolete**. This type of deficiency is best determined by a crash test. However, there are four geometric features that can be used to identify an existing rail as acceptable or functionally obsolete without crash testing:

BACK

1.1.21.2 Bridge Rail Retrofit Guidelines - (continued)

(3) Identifying Deficiencies of Existing Bridge Rails - (continued)

- Height of Rail. The bridge rail must be high enough not only to prevent the vehicle from vaulting over, but also to prevent the vehicle from rolling over after impacting. The following table can be used as a guide to evaluate if an existing rail height is adequate.

Performance Level *	Desired Rail Height**	LRFD	
		Sloped	Vert.
1	27”	NA	27”
2	32”	32”	32”
3	42”	42”	42”

* See "b. Occupant Risk" in Section 1.1.21.2(4) for discussion of Performance Level.
** Existing rails that are 1” to 2” shorter than desired height may not need to be rehabilitated. Designers should use engineering judgment based on occupant risk.
NA - not applicable

- Presence and Location of Curbs. A curb or walk between the travel lane and the bridge rail may cause an impacting vehicle to launch over the rail or strike it from an unstable position. Rails with curb heights of 6” or more and widths of 9” or more where speeds are greater than 40 mph are typically deficient.

- Vertical Openings and Post Setback. Rails with large openings or exposed posts may cause snagging. Figure 1.1.21.2A on the following page can be used to help determine if a tube rail is deficient based on opening height and post set back (adopted from *Safer Bridge Rails*, FHWA/RD-82/072). The following are examples of deficient rails due to snagging potential from large openings in the rail or exposed posts:

  - concrete parapet with large openings (e.g. Dwg 3411)

  - timber rail with concrete posts (e.g. Dwg 4412 & 4441)

  - steel rail with concrete posts (e.g. Dwg 7044)

  - Rail Continuity. Rails made up of separate unconnected elements or rails that are not connected to concrete end posts have weak spots at the discontinuity that may cause snagging.

BACK

1.1.21.2 Bridge Rail Retrofit Guidelines - (continued)

(3) Identifying Deficiencies of Existing Bridge Rails - (continued)

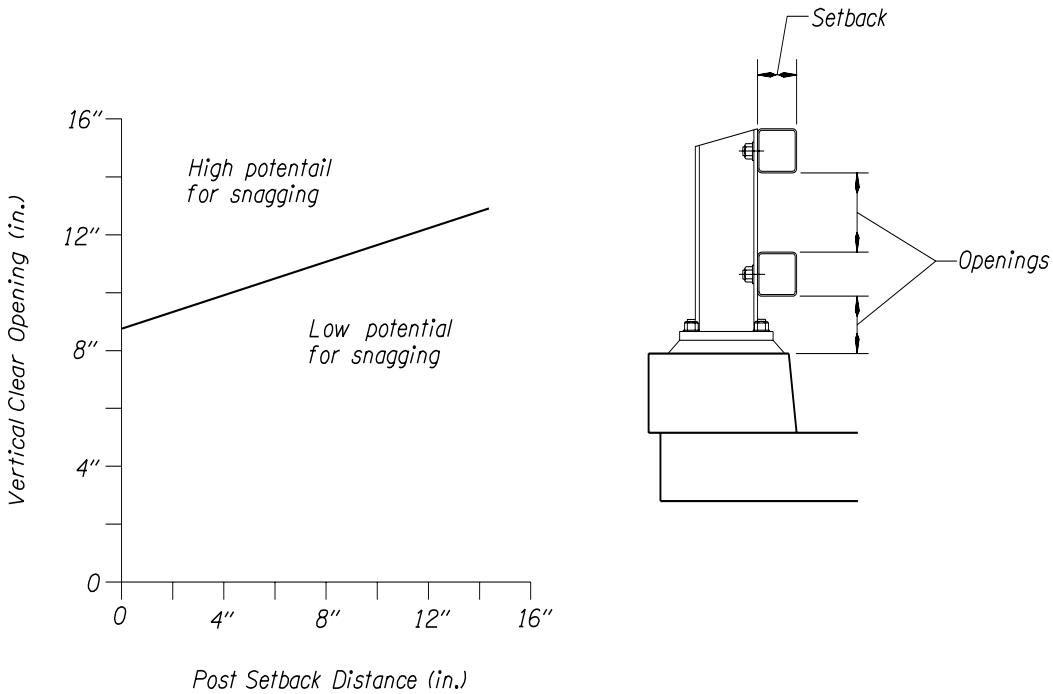

Figure 5.1.19.4A

Figure 1.1.21.2A

c. The bridge must have an adequate approach rail to bridge rail transition. Like bridge rails transition are crash tested to confirm they are structurally and functionally acceptable. To reduce the likelihood of a vehicle snagging, pocketing, or penetrating the transition the following features should be present:

- a firm connection to the bridge rail
- a gradual stiffening of the rail/post system as it approaches the bridge rail
- the transition rail should have a block between the rail element and the post.

Standard transitions are shown on the standard drawings.

In low speed locations where approach rail is not used the bridge rail end should be tapered down or shielded by using a crash cushion.

BACK

1.1.21.2 Bridge Rail Retrofit Guidelines - (continued)

(4) Retrofitting Deficient Rails

The method or level of upgrade of an existing deficient rail will depend on such factors as:

a. Type of deficiency. Upgrading structurally deficient rails requires strengthening the existing rail. Upgrading a functionally obsolete rail requires eliminating undesirable geometric features. All rail upgrades should include a safe transition from the approach rail to the bridge rail.

b. Occupant risk. Occupant risk should be considered when retrofitting a deficient rail. We have two tools to help evaluate occupant risk:

- **Site performance level requirements**. The Performance Level (as determined by the AASHTO Guide Specifications) is a cost-benefit analysis of occupant risk based on site factors such as traffic volume, vehicle speed and percent trucks. PL-1 (TL-2) sites have lower risk thus the strength and functional requirements and costs will be less than PL-3 (TL-5) sites.

- **Accident history at the site**. Bridges that have been involved in three or more accidents or a fatality in the past five years should be considered to have a high occupant risk and should be retrofitted with a PL-2 (TL-4) or PL-3 (TL-5 or TL-6) rail.

c. Cost of various options.

d. Expected time to bridge widening or replacement. Typically, if a bridge is scheduled for widening or replacement in the *Six-Year State Transportation Improvement Program* rail upgrade work can be postponed until that time. The exception is for rail transitions, they should be upgraded on all bridges whenever there is work in the area.

Occasionally it may be difficult to upgrade an existing deficient rail with a cost effective crash tested rail. In this case, a "special" retrofit design may be required. The "special" retrofit design should try to emulate one (have similar geometric and strength features) as a crash tested rail.

Standard transition designs based on crash tests are available and should be used with standard bridge rail retrofits. Standard transitions should also be used for non-standard retrofits.

BACK

1.1.21.2 Bridge Rail Retrofit Guidelines - (continued)

(5) Designer's Checklist

The following is a check list of things to consider for rail retrofit projects:

a. Determine the deficiencies of the Existing Rail.

b. Determine whether Major Rehabilitation or Replacement of the Bridge is scheduled.

c. Determine the Performance Level requirements.

d. Determine the Accident History.

e. Check Structural Capacity of the Existing Bridge - Some existing bridge decks (i.e. overhangs) may be overstressed due to a rail impact loads. In those cases, the rail retrofit should not make things worse. Check for structural reinforcing in the existing rail, specifically in the negative moment regions.

f. Where applicable use one of the Standard Retrofit Drawings (see Figure 1.1.21.2C). Where it is not feasible to use a Standard Drawing, use a crash tested rail or a rail that emulates one.

g. Estimate Cost.

STANDARD RETROFIT DETAILS

DRAWING NO.	DESCRIPTION	*CRASH TESTED	PERF. LEVEL
BR273	Thrie Beam Rail Retrofit For Curb and Parapet Rail	YES	PL-2 TL-4
BR283	Concrete Rail Type "F" Retrofit For Curb and Parapet Rail	YES	PL-2 TL-4
BR280	Concrete Rail Type "F" Replacement For Curb and Parapet Rail	YES	PL-2 TL-4
BR276	Rail Transition Thrie Beam to Three-Tube Rail	YES	PL-2 TL-4
BR270	Rail Transition Thrie Beam to Curb and Parapet Rail	YES	PL-2 TL-4

* Crash tested or similar to a rail that has been crash tested.

Figure 1.1.21.2C

BACK

1.1.21.3 Joints in Bridge Rail

Rail joints should be provided at every structure joint to prevent cracking or spalling of the rail or structure. Rail details at expansion joints should be as shown on the standard drawings. Rail joints should be skewed to match the deck joint.

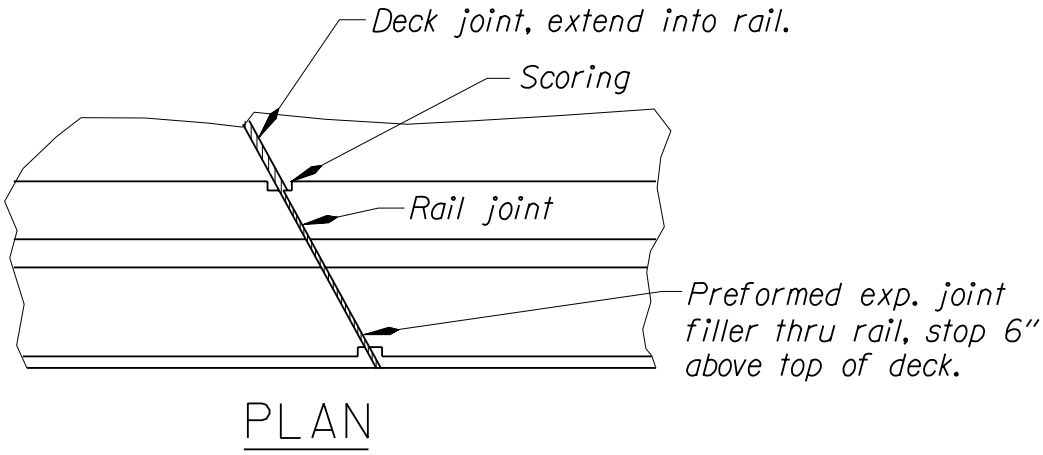

Figure 1.1.21.3A

Rail joints should not be left as open joints, including joints between the bridge end and the bridge end panel, because of the potential problem of water passing through the joint and eroding the embankment. Use the same joint material in the rail or curb as used in the roadway. If an asphaltic plug joint is used, a non-sag poured joint seal or compression joint seal could be used in the rail or curb.

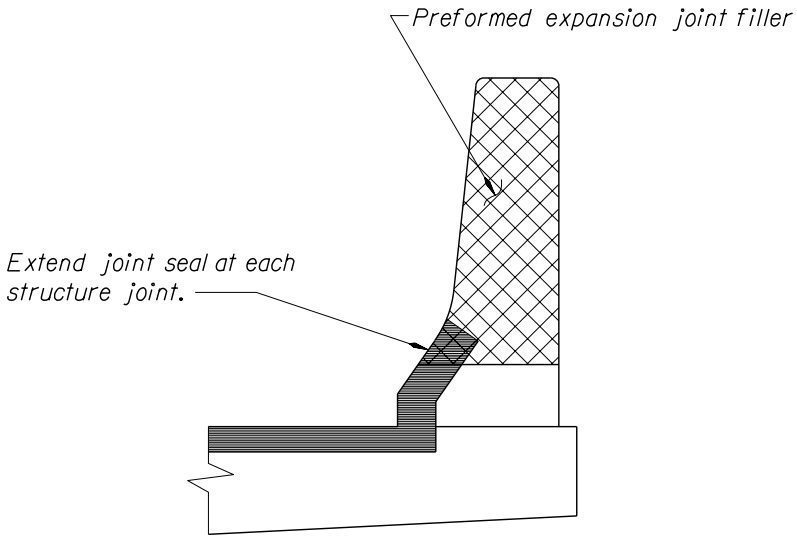

Figure 1.1.21.3B

1.1.21.4 Temporary Barriers

Temporary bridge rail should ordinarily be constructed from pin and loop median barrier secured against sliding and overturning as detailed below. Restraints will not be required if the barrier can be displaced 3' or more away from the traffic side(s) without infringing on a traffic lane, a work area, or beyond the edge of the deck. Check with Traffic Control Plans Unit if Reflectorized Barrier should be noted on the detail plans.

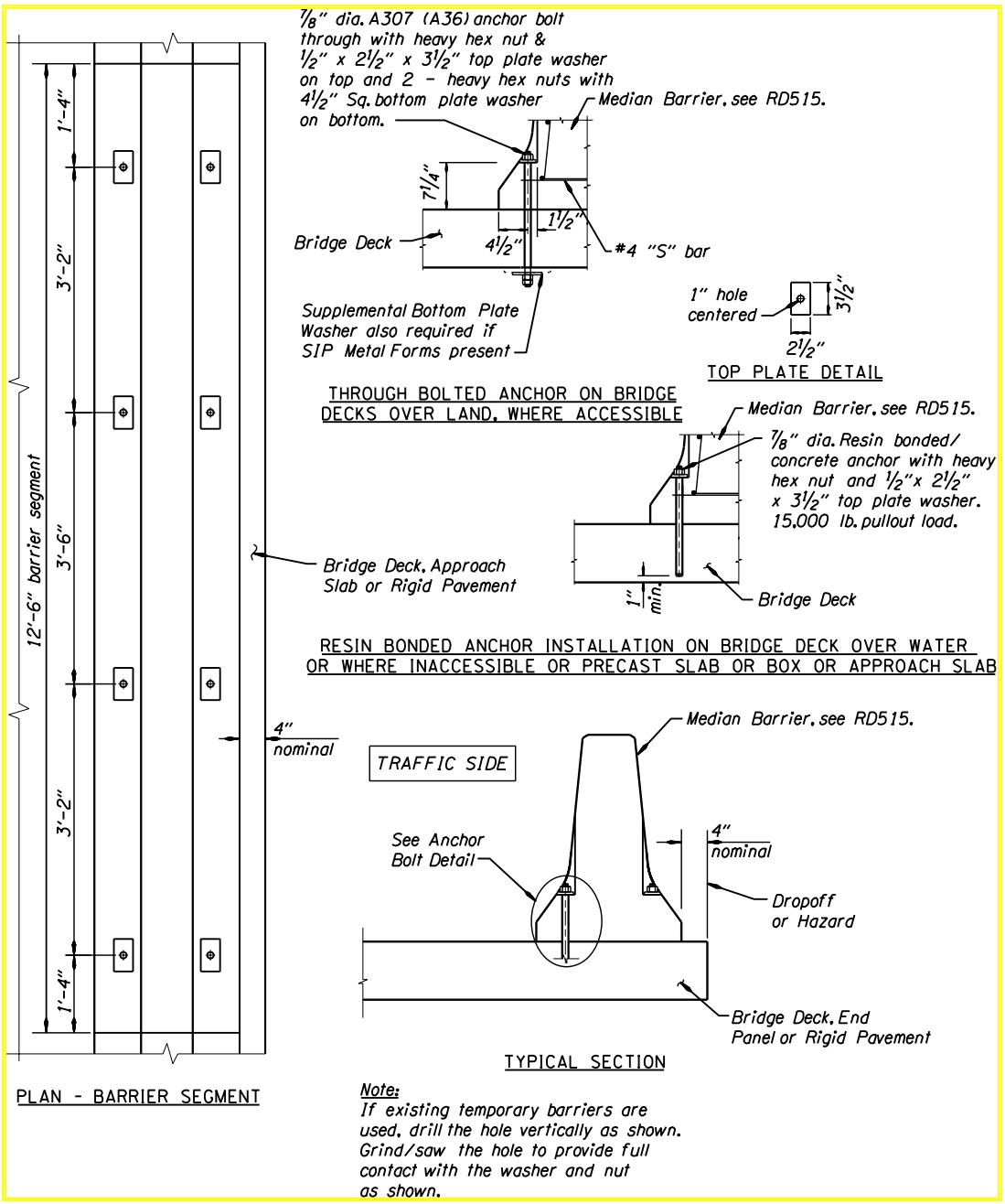

Figure 1.1.21.4A

1.1.21.4 Temporary Barriers, - (continued)

ANCHOR BOLTS, NUTS AND WASHERS: Resin Bonded Anchor Bolts shall be fully threaded rods in accordance with ASTM F 1554 Grade 36. Anchor Bolts for through bolting shall be in accordance with ASTM A 307 or ASTM F 1554 Grade 36. Nuts shall be in accordance with ASTM A 563 or ASTM A 194. Flat Washers shall be in accordance with ASTM F 436 and Plate Washers shall be in accordance with ASTM A 36 or ASTM A 709 Grade 36.

Install eight (8) Anchor Bolts per Barrier as shown. Do not drill into or otherwise damage the tops of supporting beams or girders, bridge deck expansion joints or drains. Install Anchor Bolts and Nuts so that the maximum extension beyond the face of the Barrier Units is 1/2 ". Snug tighten the Nuts on the Anchor Bolts. For through bolted installations, snug tighten the double Nuts on the underside of the deck against each other to minimize the potential for loosening.

Omit one (1) Anchor Bolt within a single Barrier Unit if a conflict exists between the Anchor Bolt location and a bridge deck expansion joint or drain. The adjacent Barrier Units must each be installed with the standard eight (8) Anchor Bolts.

REMOVAL OF ANCHOR BOLTS: Upon removal or relocation of Barrier Units, remove all Anchor Bolts and completely fill the remaining holes in bridge decks, approach slabs with an Epoxy Resin Compound from QPL. If ACWS overlay is present and is to remain, completely fill the remaining holes with hot or cold patch asphalt material.

1.1.22 Drilling Holes In Concrete

Spalling of adjacent concrete is the main concern when determining the hole location and type of drill to be used.

Resin Bonded Anchors

Center of hole is 6” or less from the edge of concrete

- Use either a diamond bit core drill or a carbide bit rotary hammer with four cutting edges on the diameter.

Center of hole is more than 6” from the edge of concrete

- Use either an air hammer, maximum 9 lb. class, or a carbide bit rotary hammer with two cutting edges on the diameter.

Mechanical Anchors

- Use either a diamond bit core drill or a carbide bit rotary hammer with four cutting edges on the diameter.

Grouted Anchors

- Any type of drill will normally be acceptable. Grouted anchors should always be placed more than 6” from the nearest concrete edge.

Existing Reinforcing - If existing reinforcing steel is required by design, require bars to be located prior to drilling.

1.1.23 Drilled Concrete Anchors

1.1.23.1 Materials

Anchors - Normally specify AASHTO M314, which is an anchor bolt material. ASTM specifications may be substituted as follows:

AASHTO Specifications	ASTM Specifications
M314,Grade 36	A307 or F1554
M314,Grade 55	F1554
M314,Grade 105	A 193(Grade B7),A449 or F 1554
M 31 Rebar,Grade 60	A 706 or A 615

- Galvanizing is only required if portions of the anchor are exposed.
- Anchor rods do not necessarily need to be fully threaded. Specify the thread length to best fit the particular application.

Bonding material - Use a resin bonding system from the Division's QPL for anchor bolts 1” dia. or less. For larger anchors, use other types of anchorage such as epoxy grout or cementious grouts with traditional development lengths.

For Grade 36 and Grade 55 anchors, use a "low strength" or "high strength" resin.

For Grade 105 anchors and reinforcement, use "high strength" resin.

1.1.23.2 Design

Design the steel portion (rod or reinforcement) of the concrete anchor according to the appropriate AASHTO design specification.

	Fasteners	Reinforcement
Service Load Design	Art. 10.32.3	Art. 8.15.5.4
Load Factor Design	Art. 10.56.1	Art. 8.16.6.4
LRFD Design	Art. 6.13.2.10	Art. 5.8.4

Anchors - Diameters and Stress Areas			
Diameter (in.)	Stress Area (in²)	Bar Size	Stress Area (in^2)
0.5	0.142	#4	0.20
0.625	0.226	#5	0.31
0.75	0.334	#6	0.44
0.875	0.462	#7	0.60
1.00	0.606	#8	0.79
1.125	0.763	#9	1.00
1.25	0.969	#10	1.27

Figure 1.1.23.1A

BACK

1.1.23.2 Design - (continued)

Design the resin portion of the concrete anchor according to the following:

General Equation for Resin Tension Capacity

Ultimate tension capacity = $R_0 * R_1 * R_2 * \pi * D * E * [U(max) - (35\ lb/in^3 * E)]$
where:

π = Pi = 3.14159
D = anchor diameter (inches)
E = anchor embedment (inches)
U(max) = 1400 psi for "low strength" resin
= 2300 psi for "high strength" resin

R_0 = reduction factor for non-redundant applications. This applies when anchors are used with only two anchors per attachment.
R_0 = 0.75 for non-redundant overhead applications
R_0 = 0.85 for non-redundant horizontal applications
R_0 = 1.0 for all other applications

R_1 = reduction factor due to edge distance
R_1 = 0.6 when edge distance = 0.5 * E
R_1 = 1.0 when edge distance ≥ 1.5 * E

R_2 = reduction factor due to anchor spacing
R_2 = 0.7 when anchor spacing = 0.5 * E
R_2 = 1.0 when anchor spacing ≥ 1.0 * E

Resin Tension Equation: Service Loads

Ultimate tension capacity ≥ 3 * design tension load

Resin Tension Equation: Seismic Loads

Ultimate tension capacity:
≥1.9 * design seismic load for "low strength" resin
≥1.6 * design seismic load for "high strength" resin

Note: for seismic loading, maximum rod loading ≤ 0.9 Fy
Fy = Yield strength of the anchor rod

Resin Tension Equation: LRFD Loads

0.5 * Ultimate tension capacity ≥ factored load

BACK

1.1.23.2 Design - (continued)

General Equation for Resin Shear Capacity

Ultimate Shear Capacity = $R_1 * R_2 * \lambda * D * E * f'c$
where:

R_1 = reduction factor due to edge distance
$R_1 = 0.5$ when edge distance = 0.5 * E
$R_1 = 1.0$ when edge distance ≥ 1.5 * E

R_2 = reduction factor due to anchor spacing
$R_2 = 0.7$ when anchor spacing = 0.5 * E
$R_2 = 1.0$ when anchor spacing ≥ 1.0 * E

$\lambda = 0.75$ for "low strength" resin
= 1.0 for "high strength" resin

D = anchor rod diameter (inches)
E = anchor rod embedment (inches)
f'c = compressive strength of concrete

Note:If concrete for an existing structure appears to be in good condition, use f 'c = 1.2 times the concrete strength shown on the existing plans.

Resin Shear Equation: Service Loads

Ultimate shear capacity ≥ 3 * design shear load

Resin Shear Equation: Seismic Loads

Ultimate shear capacity ≥ 1.7 * design seismic shear load

Resin Shear Equation: LRFD Loads

0.5 * Ultimate shear capacity ≥ factored load

Combined Resin Tension and Shear

Combined Stress Ratio (CSR) ≤ 1.0

$CSR = (f_t / F_t) + (f_v / F_v)^2$

f_t , f_v = factored loads (i.e., the right side of service load, seismic, or LRFD equations)

F_t , F_v = capacities (i.e., the left side of service load, seismic, or LRFD equations)

BACK

1.1.23.3 Plan Details

Resin bonded anchors should have the following note on the plans:

> Concrete anchors will be ____diameter Grade (36, 55 or 105) (high or low) strength resin bonded anchors. The minimum pullout strength shall be ___ lb. with a minimum embedment of _____ in. Install anchors according to the manufacturer's directions and the Special Provisions.

[For anchors using grade 60 rebar, modify the first line to read:]

> #__ drilled anchor bars will be resin bonded M 31, Grade 60 rebar.

Construction

Drill types - See Section 1.2.20 or Section 00535 of the Oregon Standard Specifications for Construction for the drill type to be used.

Holes - Holes for resin bonded anchors are normally 1/8" diameter larger than the nominal bolt diameter. Holes should be cleaned with compressed air, a non-metallic brush and water. Concrete dust is one of the most destructive elements to a resin bonded system and water is the best method to remove the dust. Holes for grouted anchors are normally ¼" diameter larger than the anchor diameter.

Temperature - Epoxy resin is not allowed for low temperature applications. The set times become quite long at low temperatures. It will normally be better to use a deeper embedment with a non-epoxy product at low temperatures. Note that "high strength" resins will normally be epoxy.

Tightening – Section 00535 of the Oregon Standard Specifications for Construction requires tightening to only 1/4 turn past snug tight. Consider what tightening is appropriate for the application and show on the plans, if different than the specifications. Anytime load indicator washers are used, tightening must meet the washer requirements. Also check if distribution plates are needed to transfer the bearing loads (from the tensioned bolt) to the concrete.

BACK

1.1.24 Anchor Bolts

1.1.24.1 Materials

Anchor bolts, including those for bridges, signs, traffic signals, and illumination structures, should normally be specified according to one of the following specifications:

AASHTO M314 is the preferred specification.

- AASHTO M314, Grade 36 for low-strength
- AASHTO M314, Grade 55 for medium-strength
- AASHTO M314, Grade 105 for high-strength

Equivalent ASTM designations for anchor bolts are:

- ASTM A307 - Low-strength carbon steel bolts for general use (non-headed rods conform to ASTM A36)
- ASTM A449 - Medium carbon steel bolts and rods to 3” diameter. Proof load requirements are similar to ASTM A325.

Anchorage of anchor bolts and rods may be accomplished by hooks for ASTM A307 and Grade 36 materials. For higher strength materials, a bearing plate tack welded to a nut or a plate between two nuts should be used.

Galvanize anchor bolts or rods full length, if galvanizing is desired.

If tensioning of anchor rods or bolts is desired, load indicator washers may be used up to 1-1/4” diameter (the largest available). Load indicator washers must be called out on the plans or in the Special Provisions, if you want them used. Recognize that concrete creep and shrinkage may significantly reduce anchor rod stress over time.

BACK

1.1.24.2 Anchor Bolt Sleeves

To allow for some flexibility in placement and small corrections in bearing locations, an anchor bolt sleeve is often used. The anchor bolt can be field bent slightly to fit the required bearing location. The bearing plate can be temporarily shimmed and then the pad constructed or the pad can be constructed with a blockout around the bolt. The sleeve is grouted at a later time. There are commercially produced anchor bolt sleeves or a fabrication detail can be added to the drawings.

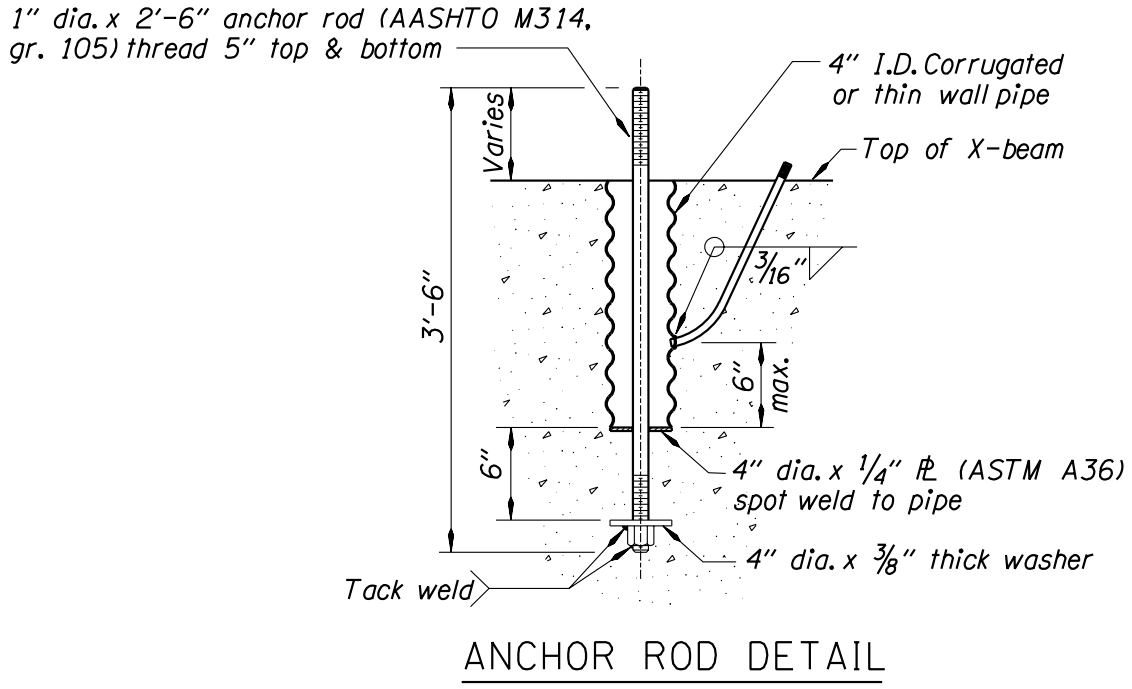

Figure 1.1.24.2A

1.1.25 Corrosion Protection

The level of effort to prevent reinforcing steel corrosion depends mainly on the potential for exposure to a corrosive environment.

1.1.25.1 Marine Environment

For the purposes of determining when the specified corrosion protection is required a Marine Environment is defined as any of the following:

- A location in direct contact with ocean water, salt water in a bay, or salt water in a river or stream at high tide. (substructure)
- A location within ½ mile of the ocean or salt water bay where there are no barriers such as hills and forests that prevent storm winds from carrying salt spray generated by breaking waves.
- A location crossing salt water in a river or stream where there are no barriers such as hill and forests that prevent storm winds from generating breaking waves.

1.1.25.2 Marine Environment Protection

Provide the following minimum protection system for structures in a Marine Environment:

- Stainless steel for all deck, girder and crossbeam reinforcing steel.
- Black steel (no epoxy coating) for prestressing strands in precast members (to allow for future cathodic protection if needed).
- Minimum 2” cover on all cast-in-place members.
- HPC (microsilica) for all precast and cast-in-place concrete.

Additional protection measures including concrete sealers, cathodic protection or others should be reviewed with the Corrosion Specialist on a project-by-project basis.

BACK

1.1.25.3 Deck and End Panel Reinforcement Protection

The protection system for deck and end panel reinforcement is shown in Table 1.1.25.3A below.

For reinforcing steel extending out of the deck or end panel into bridge rails, curbs or sidewalks, use the same type of reinforcement as used in the deck or end panel. Use black (uncoated) steel for all other bridge rail, curb or sidewalk reinforcement.

Examples are shown on the following pages in Figures 1.1.25.3A, B and C.

Table 1.1.25.3A

DECK AND END PANEL REINFORCEMENT PROTECTIVE PRACTICES

	Coastal Areas (within 1 air mile of the Pacific Ocean)	Snow/Ice Areas*	Mild Areas**
Concrete Type	HPC (microsilica)	HPC (microsilica)	HPC (microsilica)
Reinforcement Type	Deck – Stainless steel top and bottom mats End Panel – Black (uncoated) top and bottom mats	Epoxy coated top and bottom mats in both the deck and end panel	Black (uncoated) top and bottom mats in both deck and end panel
Reinforcement Cover	2” top mat 2” bottom mat	2.5” top mat 1.5” bottom mat	2.5” top mat 1.5” bottom mat

* Snow/Ice areas are defined as all areas of central and eastern Oregon, the Columbia River Gorge, Jackson County, and any other areas above 1500 ft. elevation. These areas are intended to include all areas with the potential to receive periodic application of deicing chemicals.

** Mild areas are defined as all areas not in a coastal area or in a snow/ice area. This includes all of western Oregon below 1500 ft. elevation that is not within 1 mile of the Pacific Ocean.

BACK

1.1.25.3 Deck and End Panel Reinforcement Protection - (continued)

Non-Coastal Cast-in-place Decks - For cast-in-place concrete decks, provide 2-1/2" of cover over the top mat of reinforcing steel. If epoxy coating is required, epoxy coat top and bottom longitudinal and transverse bars (including "truss" bars) and all bars extending from the deck into the sidewalk, curb or railing. Stirrups for precast girders do not need to be epoxy coated.

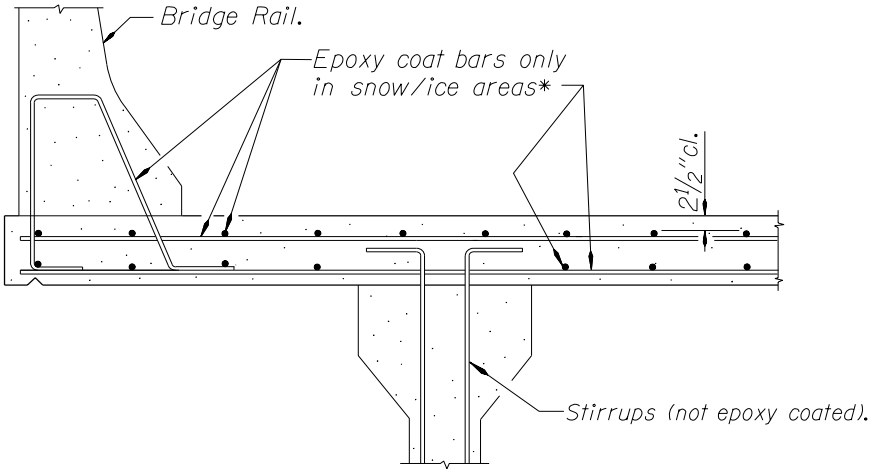

* See Table 1.1.25.3A for definition of snow/ice areas.

Figure 1.1.25.3A

Non-Coastal Structure Widening - For structure widening with cast-in-place decks normally provide a concrete overlay on the existing deck. If epoxy coating is required, epoxy coat the top and bottom longitudinal and transverse bars and all bars extending from the deck into the sidewalk, curb or railing.

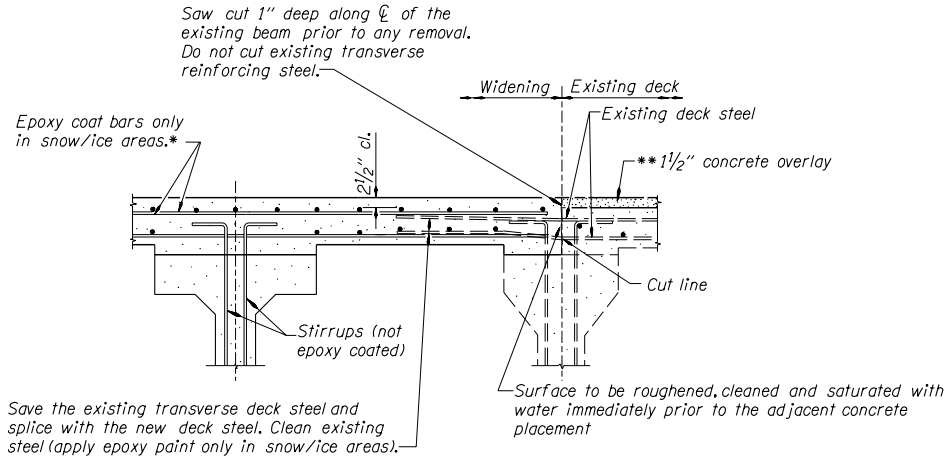

* See Table 1.1.25.3A for definition of snow/ice areas.
** ¼" concrete deck surface to be removed prior to placement of the overlay.

Figure 1.1.25.3B

1.1.25.3 Deck and End Panel Reinforcing Protection - (continued)

Non-Coastal Precast Slabs and Boxes - Precast slabs and box beams require waterproof membrane and an asphalt concrete wearing surface unless specifically directed otherwise. If epoxy coating is required, epoxy-coat the top mat bars and bars extending from the precast elements into the sidewalk, curb or railing. See the standard drawings for other epoxy-coated bars in the precast slabs and box beams.

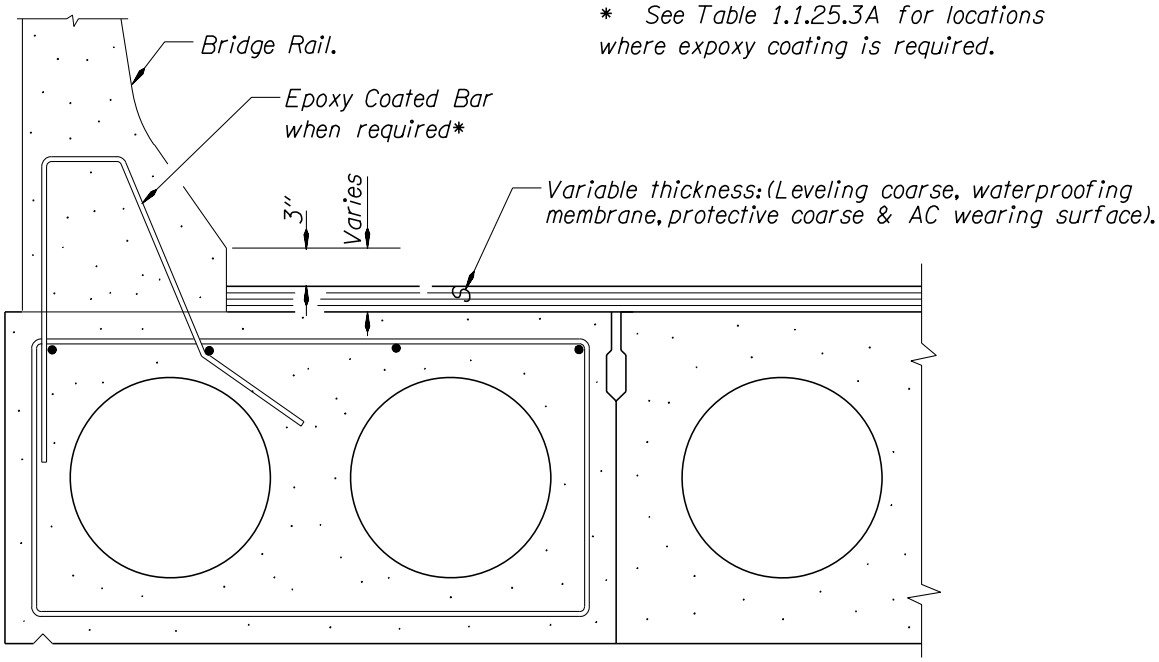

Figure 1.1.25.3C

1.1.25.4 Waterproofing Membranes

Waterproof membranes are primarily used for corrosion protection of reinforcing steel in concrete members located directly below an asphaltic concrete wearing surface (ACWS). This steel is usually located in concrete decks (or prestressed concrete members without cast-in-place concrete decks) where there is inadequate corrosion protection of the deck reinforcing steel. Membranes may also be used to protect timber bridge decks from moisture damage where an ACWS is used. Membrane systems are selected from the ODOT Qualified Products Listing with input from information listed in the project Special Provisions section 00591. Waterproof membranes have a high failure rate and should only be used when other solutions have been exhausted. Acceptable solutions may include Structural Overlays, Epoxy Coated Reinforcing, Stainless Steel Reinforcing, MC concrete (case by case basis) and increased concrete cover.

New State Bridges

For new bridges with cast-in-place decks, a waterproof membrane should not normally be used, since these should normally be constructed without an ACWS.

For precast prestressed Deck Bulb-T, Slab or Box Beam bridges without a cast-in-place concrete deck or structural concrete overlay, a deck protection system is required on State Highway System (NHS) bridges located where corrosive deicers (Chlorides) could be encountered in the future. Current or future use of corrosive deicers (Chlorides) could be encountered in mountainous areas (or snow zones) or where freezing regularly occurs. Consult the district maintenance office where the bridge is to be located for winter road conditions. If water leaking through the joints between precast units would be objectionable to traffic below the bridge, then adding a structural overlay or cast-in-place deck should be considered. The situation of traffic below the bridge should be investigated prior to deciding whether or not to use a membrane.

Existing State Bridges

FHWA requirements for State owned bridges states that “If deicing salts may be used in the future, some type of deck protection shall be used”. This applies where an ACWS is to be installed over an existing concrete deck or where an ACWS with membrane is to be removed and an ACWS placed without a membrane. Mountainous areas (or snow zones) have the potential for deicing being performed with corrosive deicers (Chlorides) in the future.

Consideration should be given to removing the ACWS without placing a membrane on surface preservation projects (ACWS overlay projects), where the existing bridge has an ACWS with or without an existing membrane. A structural concrete overlay should be used if warranted by Section 1.1.20.5 (6) of the ODOT Bridge Design Manual. Where most or all of the ACWS is to be removed, it should be anticipated that any existing membrane will be damaged during the ACWS removal process and need replacing if the membrane is considered necessary.

BACK

1.1.25.4 Waterproofing Membranes - (continued)

Existing State Bridges - (continued)

On surface preservation projects, where an ACWS without membrane is being considered or where a membrane will be removed and not replaced as part of ACWS overlay work on a bridge, the following should be performed:

- Investigation of the bridge location shall be done to determine if it is situated in an area that receives corrosive deicers (Chlorides) on the roadway or may receive corrosive deicers(Chlorides) in the future. Bridges in mountainous areas or snow zones may receive corrosive deicers(Chlorides) in the future. The District Maintenance office should be able to provide answers about locations of snow zones and where freezing or sanding regularly occur. If the bridge is not located in a mountainous or snow zone no deck protection system is required. If the bridge is in a mountainous or snow zone see the next bulleted item.

- If the structure is located in a snow or mountainous zone, chloride testing shall be done on the existing concrete bridge deck using AASHTO T260 before an exception to the membrane requirement is possible. The request for testing should be submitted to the Bridge Engineering Section, Preservation Team, early in the design process to allow adequate time for collection and testing of the samples. Two conditions must be satisfied for the exception; the chloride content of the existing concrete surface must be low; and the District Maintenance manager must agree that no chloride containing chemicals will be applied to this section of roadway in the future. A letter from the District Maintenance manager shall be submitted to the Bridge Section Preservation Team Manager agreeing that no chemical deicer containing chloride will be applied within five miles of the bridge(s). The letter will be placed in the Bridge Section Maintenance file for each bridge in this section. If the chloride content of the existing concrete surface is high (0.015% or greater by mass of samples), then plans should be made to remove the contaminated concrete or replace the deck when damage is severe. If the Chloride content of the existing concrete is low, Bridge Section will notify FHWA that bridge(s) resurfacing without installing a membrane is planned.

  Note: As far as deicing is concerned, maintenance crews can use CMA (Calcium Magnesium Acetate) instead of CG90 (Magnesium Chloride) and this basically prevents the problem of additional chlorides.

New/Existing Local Agency Bridges

A deck protection system is not required if the bridge is not on the NHS system. If the Local Agency bridge is on the NHS system, see New and Existing State Bridge guidelines. A deck protection system may be desirable and should be investigated on each project, whether NHS or Non-NHS. Testing for chlorides as described above may assist in determining if a deck protection system is warranted. The Local Agency may also request a waterproof membrane.

BACK

1.2 STEEL STRUCTURE DESIGN AND DETAILING

1.2.1 Steel Girders

Design

Design according to *AASHTO LRFD Bridge Design Specifications*.

The minimum strength for deck concrete is 4350 psi with an approximate modulus elasticity of 3800 ksi. The modular ratio "n" does not need to be an integer number and for 4350 psi concrete must not be less than 7.60.

Consult with the Steel Bridge Design Standards Engineer for the latest design aids and design computer programs.

Details

See Standard Drawings BR600, BR605 and BR610 for general details.

(1) Girder Spacing

Use wider girder spacing to reduce the number of lines of girders, which will reduce shop and field labor. Girder spacing between 10' to 14' generally works well. (10' to 12' for spans less than 140' and 11' to 14' for spans greater than 140')

(2) Girder Lengths

Girders should be as long as possible to reduce the number of field splices. Girder or girder field segment lengths without a field splice should normally not exceed 150'. There may be locations where girders lengths will be controlled by weight or access to the bridge site. Long girders may also require auxiliary lateral support during transportation. Consult with the Steel Bridge Standards Engineer for a maximum fabrication length.

An optional bolted field splice should normally be shown to allow the fabricator and contractor some flexibility in fabrication and transportation.

(3) Girder Depths

Girder depths, particularly for haunched girders, may be limited because of transportation constraints.

Use constant depth girders where possible.

(4) Girder Splices

Locate splices to avoid conflicts with wind bracing, diaphragms and/or intermediate stiffeners. Layout locations of all intermediate stiffeners, diaphragms and wind bracing to avoid conflicts with the flange cutoff points (and possible splice locations).

Splices are a natural location to make changes in the flange size to eliminate flange welds. Webs should be the same thickness on each side of the splice.

BACK

1.2.1 Steel Girders - (continued)

Details - (continued)

(5) Girder Flanges

(a) General

The number of changes in flange size should be kept to a minimum, as the cost of a butt weld will offset a considerable length of excessive flange area.

Constant width flanges enables the fabricator to order the flanges in multiple width plates which are more economical than universal mill plates. The shop flange splices can be made while the plates are in wide slabs and cut to widths simultaneously with multiple cutting torches.

Keep the number of flange splices to a minimum. At least 500 pounds of steel should be saved before adding a splice for a change of thickness in an average 20" wide flange. If the splice is a transition in width, the saving should be 800 pounds of steel. Allow the contractor the option to use thicker flange plate to reduce the number of flange splices.

The minimum size flange should be 3/4" x 12". The minimum 3/4" flange thickness is to minimize the distortion of the flange due to welding of the flange to the web.

For longitudinal beams, limit the maximum change between adjacent plate thickness per 1.2.1(c) and 6" in width, at both welded and bolted connection section changes.

(b) Compression Flanges

Make top flanges a constant width and thickness where possible. Minimizing the number of changes in the top flange will also facilitate easier deck forming.

It may not be prudent to minimize the top flange. The girder needs significant lateral load capacity to resist lateral transportation loads and lateral loads from deck overhang brackets and deck placements. Some erectors limit the length of girder shipping pieces to 85 times the flange width. Another side benefit of providing generous top flange as that the non-composite deflections are reduced.

(c) Tension Flanges

Make bottom flanges a constant width where possible. If a change in flange width is needed, make it at a bolted splice location.

Limit the maximum flange thickness to 3.0". For flange thicknesses greater than 1-1/2", limit the change in adjacent plate thicknesses to 3/4". For flange thicknesses 1-1/2" or less, the change in adjacent plate thicknesses to ½".

Generally, use a minimum flange width that is equal to the width of the flange resisting the maximum positive moment. Widen the flange as necessary in negative moment areas so the flange thickness will not exceed 3.0" at the bent.

BACK

1.2.1 Steel Girders - (continued)

Details - (continued)

(6) Girder Webs

Commonly used web plates are in the range of 48” to 96”.

Minimum web thickness should be 1/2”.

Note that economy will often be served by the choice of a web plate of sufficient thickness that it does not require transverse stiffeners. In some cases thinner web plate with partial web stiffeners are economical. The labor to place and weld one foot of stiffener is equal to about 25 pounds of steel. Un-stiffened webs reduce fabrication, painting costs (for non-weathering steel) and flange sizes. Thicker webs are also helpful in reducing web distortion due to welding and in supporting deck overhang brackets for the deck placement.

Design web plates in 1/16” increments with a note that the contractor may increase the web thickness shown by 1/16” at no additional cost to the state. Minimize web transitions as the cost of a butt weld web splice often exceeds the cost of the added material between sections.

The cost of a square butt joint web splice is equal to about 800 pounds of steel per foot of splice. When web plates are over 80’ long and constant thickness, the fabricator should be given an optional shop splice on the design plans. This most economical bid can then be prepared according to the mill length extras, market areas available, and transportation and handling costs.

BACK

1.2.1.1 Materials and Identification

(1) General

Identify all steel by grade on the contract plans.

Structural steel for bridges should conform to ASTM A709 (AASHTO M270). These specifications include Grades 36, 50, 50W, HPS-50W, and HPS-70W. ASTM A709 steel specifications are written exclusively for bridges wherein supplementary requirements for Charpy V-Notch Impact tests are mandatory. Grade HPS-70W steels has recently been developed that provide high strength, enhanced durability and improved weldability. Specify Grade HPS 50W and HPS-70W to be "Quench and Tempered" in the contract document and for thermo-mechanical control processed require the contractor to provide test samples at both ends of each rolled plate. Plates that pass the required test are acceptable for fabrication.

Structural Steel for steel piling, metal sign structures and other incidental structures should conform to ASTM A36, ASTM A572 or ASTM A588. Incidental structures include luminaire and traffic signal supports, bridge metal rails and metal rail posts, guardrail connections, earthquake restraints, bridge deck expansion joints, fencing post connections, etc. Merchant quality steel (non-spec) is used in items such as catch basin frame, catch basin, deck drain grate, manhole rungs and steps, access hole cover, guardrail spacer blocks, shims, anchor bolt plate embedded in concrete, etc. where a high degree of internal soundness, chemical uniformity or freedom of surface defects are not required. Acceptance of such items is on the basis of visual inspection.

ASTM A36, A572, or A588 may be used for structural steel for bridges provided the supplementary Charpy V-Notch Impact test requirements are included in the Special Provisions. If Charpy V-Notch Impact tests are required for ASTM A36, A572 or A588 structural steel, use the supplementary requirements of ASTM A709.

Don't use A709 (Gr 36, 50, 50W) steels for plates thicker than 3", nor butt welds in tension members over 3". Limit plate thickness for HPS 50W and HPS-70W to 2". Consult with the Steel Design Standards and Practice Engineer for specific project needs.

Specify ASTM A709 Grade 50 steel for all structures that require yield strengths between 36 ksi and 50 ksi and are to be painted or galvanized.

BACK

1.2.1.1 Materials and Identification - (continued)

(2) Weathering Steel

Through several cycles of wetting and drying, the surface of the steel develops a tight oxide coating (patina) that provides its own corrosion resistant surface finish. Eliminating the need for painting results in minimal future maintenance and lower life cycle costs.

The use of ASTM A709 Grade 50W, HPS 50W, HPS 70W &100W weathering steel should be considered with some caution. There are some environmental areas, locations or conditions where weathering steel should be avoided. There have been cases where the use of this material in improper locations or under improper conditions has resulted in less than desirable performance of the structure. Conditions or locations of concern include:

Environment

- Marine Coastal areas
- Frequent high rainfall, high humidity or persistent fog
- Industrial areas where concentrated chemical fumes may drift onto the structure
- Weathered, riveted, or bolted built up structural member (boxes or plate girders)

Location

- Grade separations in tunnel like conditions
- Low level water crossings
- Conditions that do not allow for the drying of the steel necessary to develop a good patina.

The FHWA Technical Advisory *T 5140.22*, “Uncoated Weathering Steel in Structures”, should be reviewed or location restrictions and recommended detailing practices.

One of the significant advantages of HPS 50W, HPS 70W steel is its enhanced weathering capacity over Grades 50W ands 70W steels. Weathering capability is calculated using the heat analysis compositions in an equation to calculate an atmospheric corrosion resistance index, “I”, in ASTM G101 “Estimating the Atmospheric Corrosion Resistance of Low-Alloy Steels.” In general, a corrosion index of 6.5 is considered a minimum to be classified as HPS. The higher the index, “I”, the more corrosion resistant is the steel. Do not use Grade 70W steel.

BACK

1.2.1.1 Materials and Identification - (continued)

(3) Check Samples

Tension members and elements that require notch toughness check samples are to be clearly identified on the plans. Consult with the Fracture Control Engineer, on the Preservation Team, to determine if any of the components will require check samples. If check samples are required, include special provision Section 00560.22(d) in the project Special Provisions. Check samples are required for cross frame members on curved steel girders.

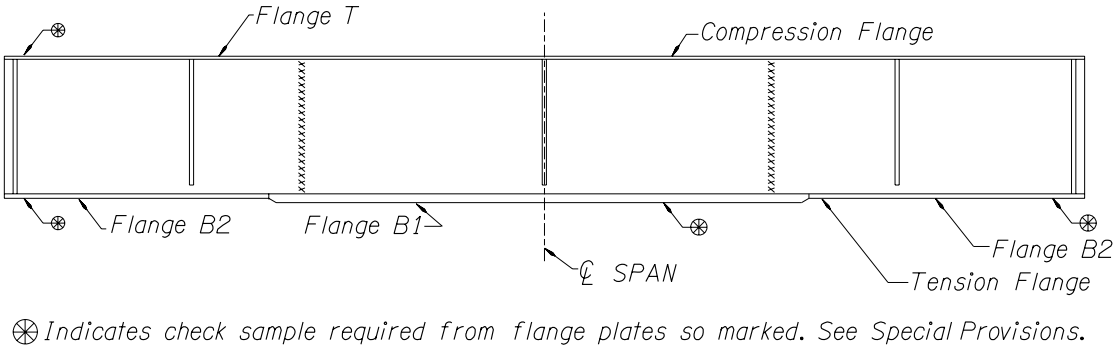

Figure 1.2.1.1A

(4) Fracture Critical Members

Fracture-critical members should also be clearly identified on the plans.

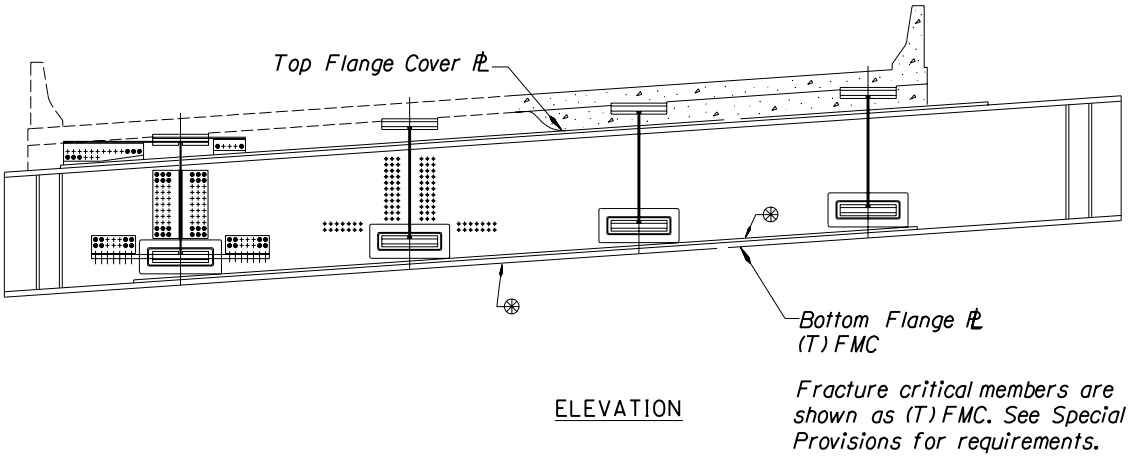

Figure 1.2.1.1B

1.2.1.2 Shop Lengths of Welded Girders

Locate field splices in welded steel beams so as not to exceed the following shop lengths and mass (All field splices shall be bolted):

- Bridge site is readily accessible . . . . 150'
- Bridge site is not readily accessible . . . . 125'
- Maximum weight should not exceed 150,000 lbs.

Prior to finalizing the shop length of steel members, consult with the Steel Bridge Standards Engineer.

1.2.1.3 Intermediate Cross Frames

Design

If needed, provide and design cross frames for all stages of construction and the final condition.

Detailing

In choosing between intermediate cross frames of "K" or "X" form, the "X" form should generally be used when the ratio of the beam spacing to the frame depth is less than 2 and the "K" form when it is greater than 2. When the depth of the frame approaches 3' or less, a solid plate diaphragm should be considered.

Maintenance requirements should also be considered in the cross frame design. Adequate clearance for sandblasting and painting should be provided. Inaccessible areas should be avoided. It may also be necessary to provide for maintenance walkways and/or utilities through the cross frames.

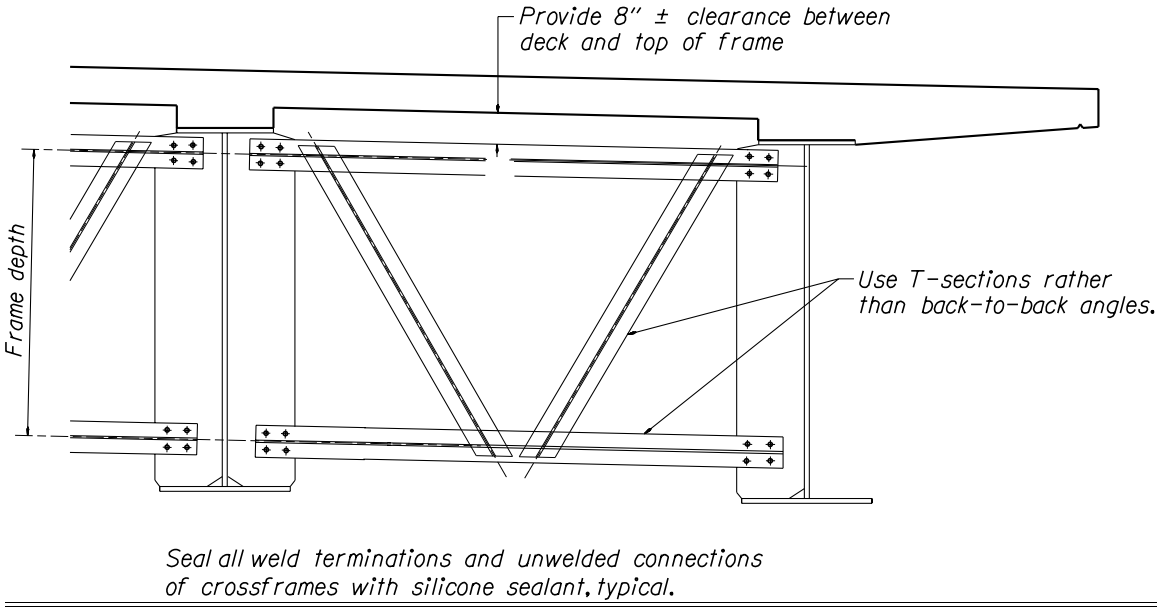

Figure 1.2.1.3A

1.2.1.3 Intermediate Cross Frames - (continued)

Rigidly connect cross frames to the top and bottom flanges to prevent web distortions and cracking. Stiffeners should be welded to compression and tension flanges as shown on figures 1.2.1.3B, C and D. The ends of welds should end about 1/4" away from the edge (snipe, clip, etc.) to avoid a poor quality weld termination.

Gusset Plates for Bracing Members - Cope gusset plates welded to both the web and flange of a plate girder a minimum of 1-1/2" to prevent intersection of the two welds. Horizontal gusset plates for lateral bracing are preferable welded to a connecting plate, which will be bolted to the web of the plate girder. If a horizontal gusset plate is welded to the web of the plate girder, cope it so as to be clear of any vertical web stiffener.

Do not stagger intermediate cross frames in skewed or curved steel plate girders where two adjacent steel plate girders have significant differential deflection. Where two adjacent plate girders have significant differential deflection, such as the first row of cross frame from the end bents, do not use the "K" or "X" type of cross frames. Use details similar to Figure 1.2.1.13B. Check fatigue requirements of all welded connections.

BACK

1.2.1.3 Intermediate Cross Frames - (continued)

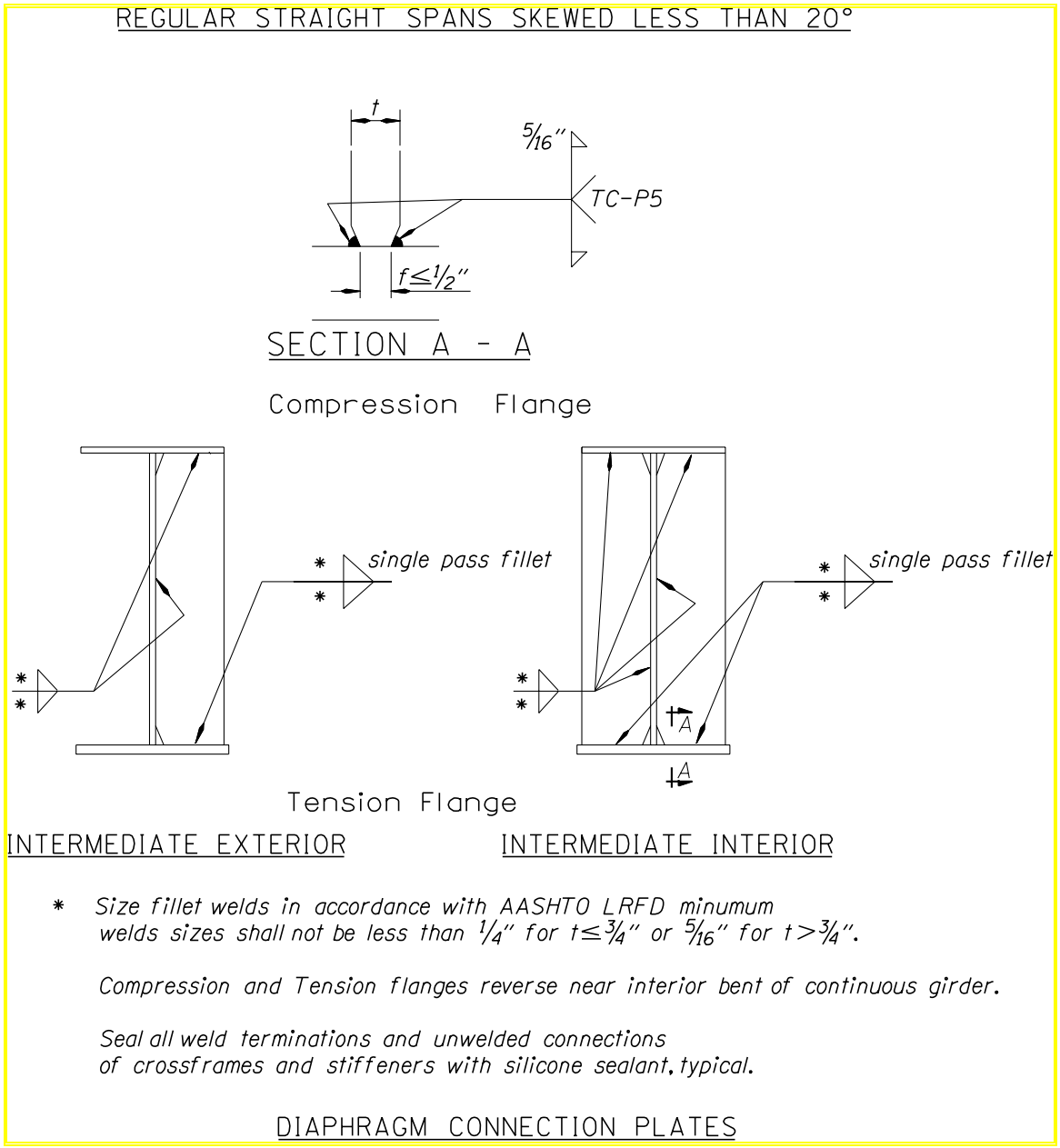

Figure 1.2.1.3B

BACK

1.2.1.3 Intermediate Cross Frames - (continued)

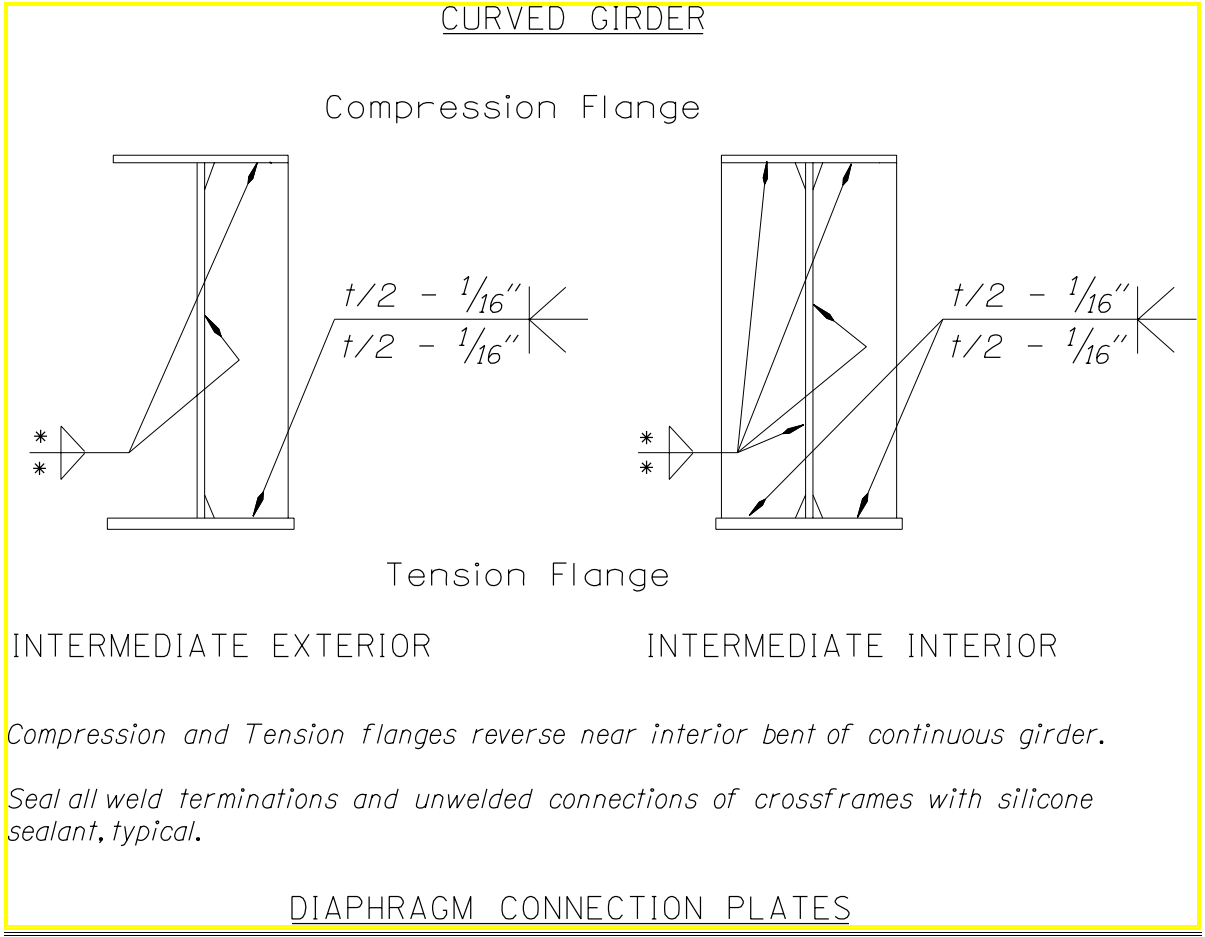

Figure 1.2.1.3C

BACK

1.2.1.3 Intermediate Cross Frames - (continued)

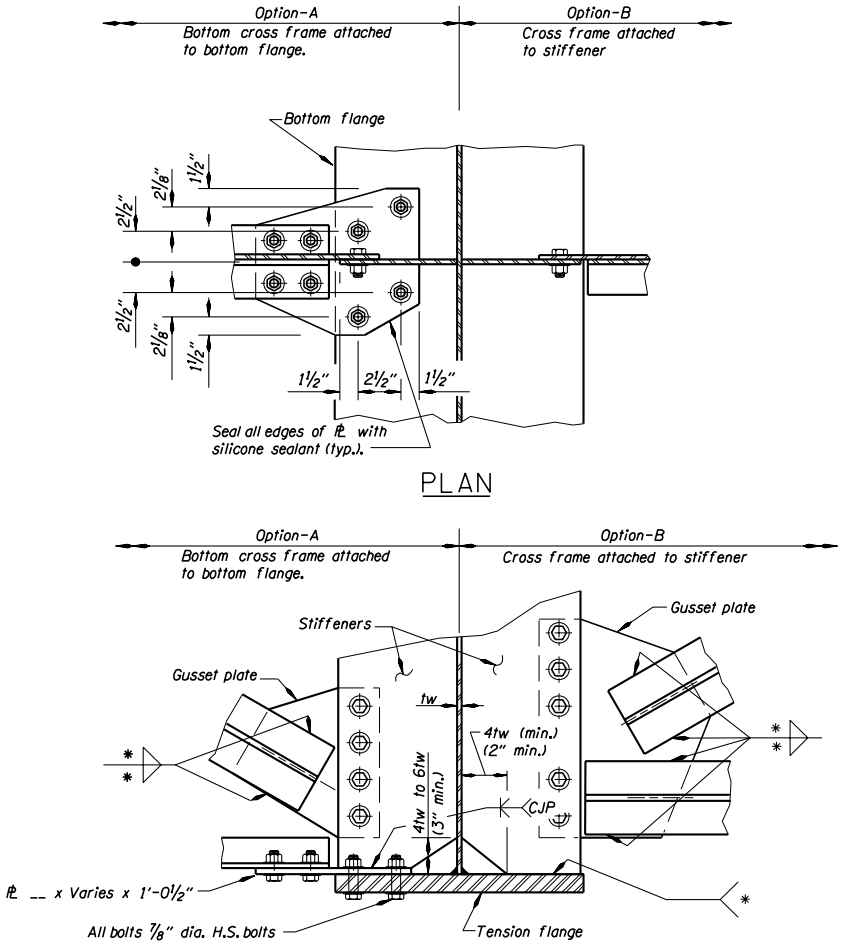

Installation Procedure:

Step 1. Coat contact surfaces.

Step 2. Bolt thru bottom flange.

Step 3. Weld stiffener to web.

Note:
Steel to steel contact surfaces shall be cleaned and coated non welded connections prior to bolting per Specification.

Stop all fillet welds ±¼" clear from end of plate

* Size fillet welds in accordance with AASHTO LRFD minumum welds sizes shall not be less than ¼" for t ¾" or 5/16" for t ¾".

Seal all weld terminations and unwelded connections of crossframes and stiffeners with silicone sealant, typical.

For stiffener thickness connecting to tension flange ≤ ½". See figure 1.2.1.3B

WELDED BRACKET DETAILS

Figure 1.2.1.3D

BACK

1.2.1.4 Intermediate Web Stiffeners

Note that economy will often be served by the choice of a web plate of sufficient thickness that it does not require transverse stiffeners.

Where transverse intermediate stiffeners are used, provide them on both faces of the webs of interior girders and on the interior faces, only, of exterior girders.

Rigidly connect the stiffeners to the compression portions of the flanges. Stiffeners may be welded to compression flanges. The ends of welds should end about 1/4" away from the edge (snipe, clip, etc.) to avoid a poor quality weld termination.

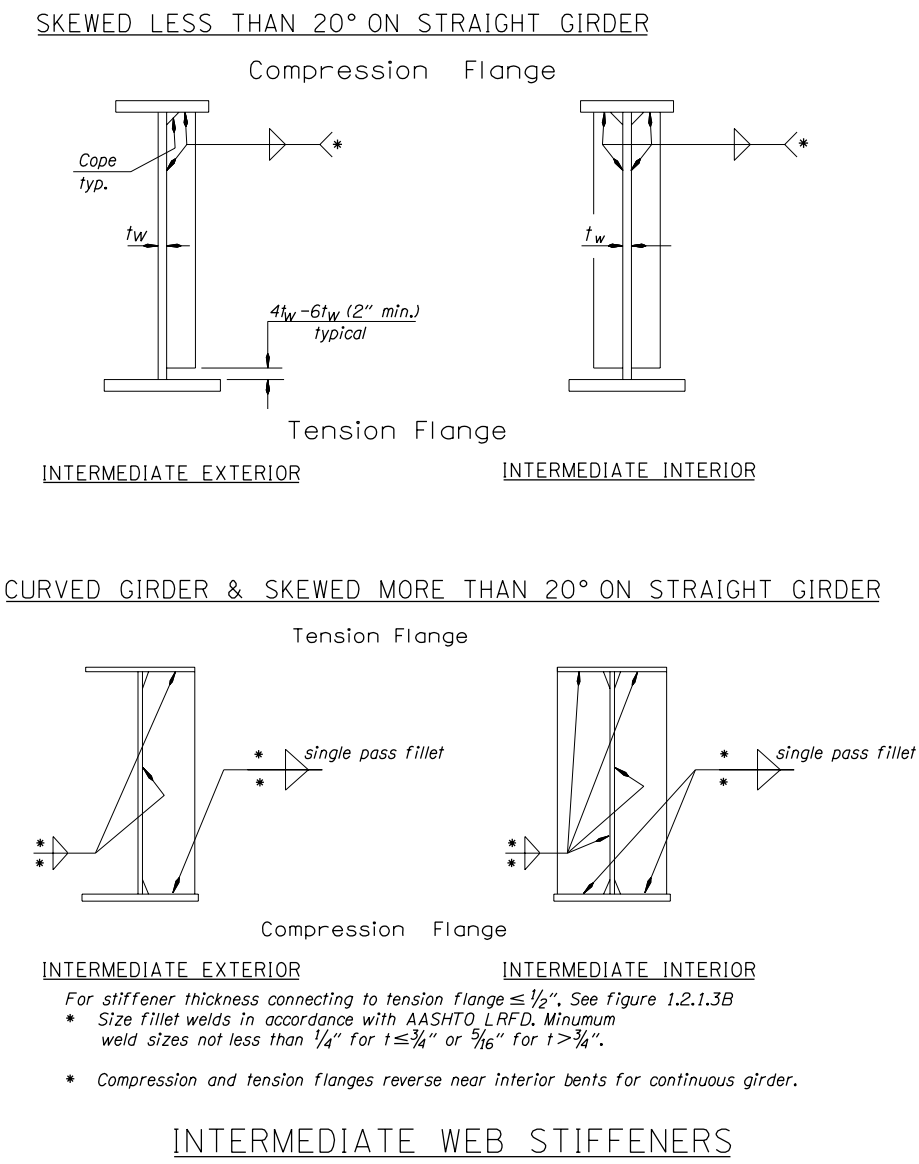

Figure 1.2.1.4A

1.2.1.5 Bearing Stiffeners

Bearing stiffeners and the web act as a column section, transferring loads from the superstructure to the substructure. In combination with the end frames, they also transfer lateral loads from the superstructure to the substructure. The details shown below are for simple span, non-continuous supports.

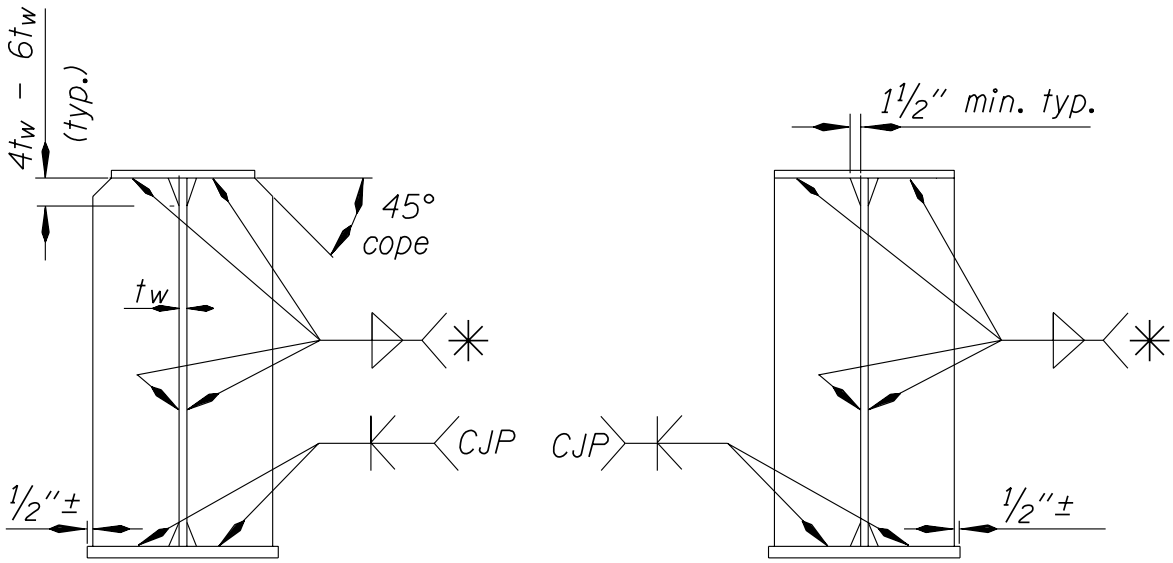

Figure 1.2.1.5A

For continuous beams, where the top flange is in tension use the Tension Flange detail shown in Figure 1.2.1.3B, as the usual practice is being cautious to weld stiffeners to tension flanges. Stop weld 1/4" away from the edge (snipe, clip, etc.) to avoid a poor quality weld termination. Minimum size of fillet weld is the minimum specified in Section 1.2.2.2. Select bearing stiffener widths in increments of 1/2".

For web attachment plates or solid diaphragms that form an angle θ greater than 30 degrees use a partial penetration groove weld with fillet reinforcement as shown on Figure 1.2.1.5.B

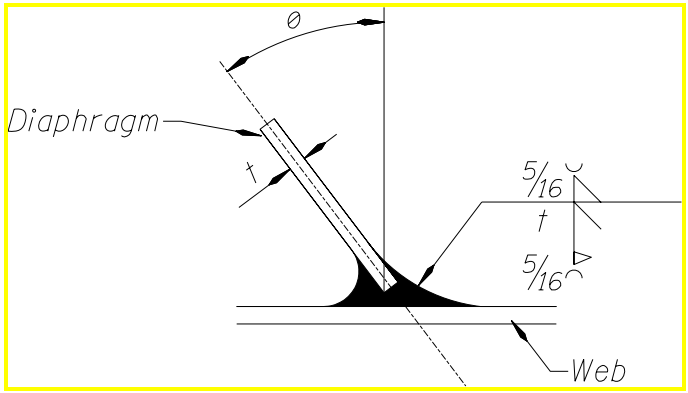

Figure 1.2.1.5.B

1.2.1.6 Cross Frames at Bents

Cross frames at bents are more critical to transfer seismic forces from the superstructure to the substructure. One solution is to use detail 1.2.1.3B and a W shape beam between the girders at the top of the cross frame. Welded studs are added to the top flange of these W shape beams to provide the lateral resistance.

If a joint system is required for a cross frame at end bents, it may be necessary to use details similar to cross frames at continuous beam interior bents. See Figure 1.2.1.6A.

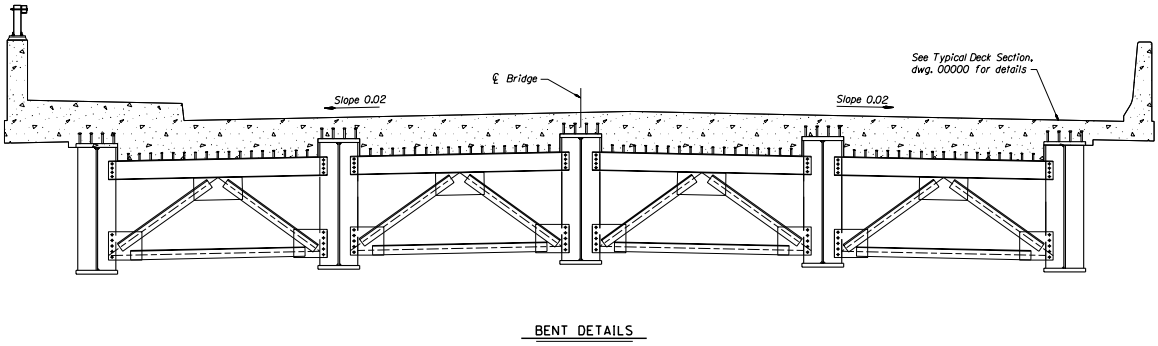

Figure 1.2.1.6A

It is desirable to have all cross frame member centerlines intersecting at a common point. But, it is often easier to design for the eccentric loads in the connection than to get a common intersection point of the member centerlines.

1.2.1.7 Composite Action and Flange Shear Connectors

Provide shear connectors in all portions of continuous spans, positive or negative moment. Old practice was to not use concrete reinforcement to increase the moment capacity of composite girders in the negative moment areas. However, for deflection and moment calculations include longitudinal reinforcing steel in the composite section properties of the girder in the negative moment areas.

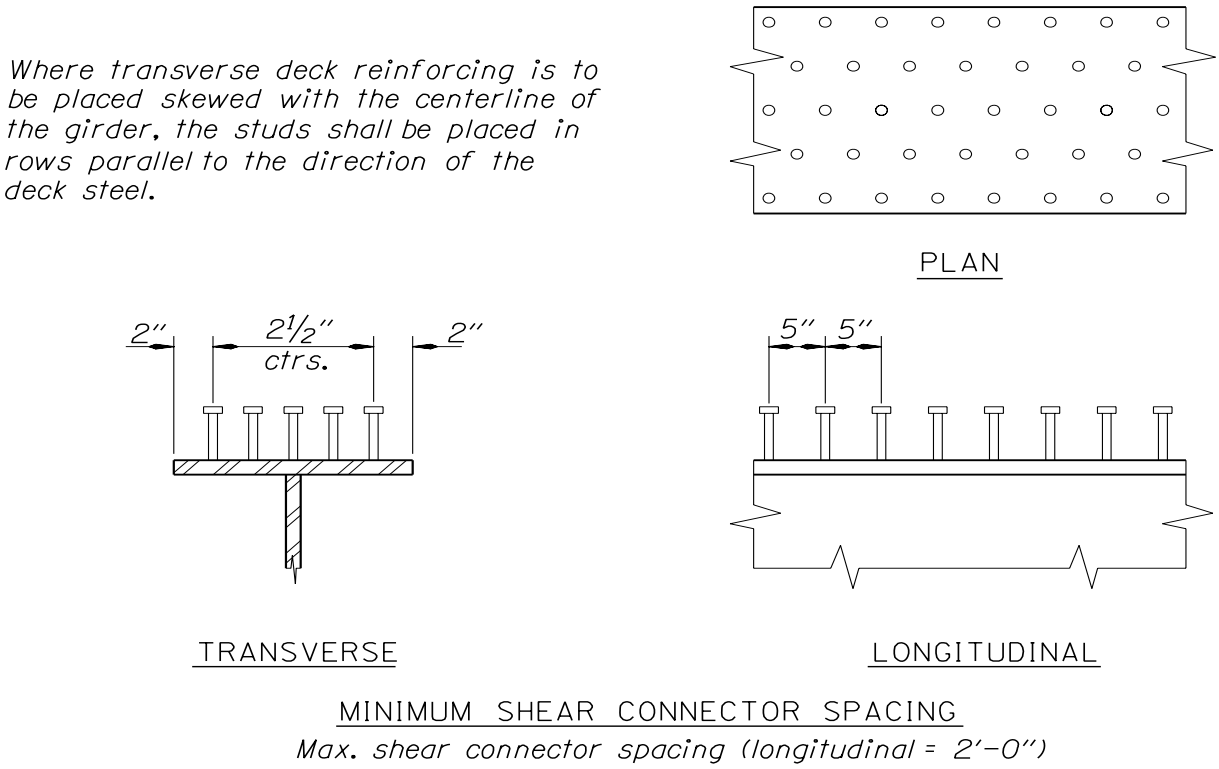

Figure 1.2.1.7A

1.2.1.8 Beam Camber

(1) Beam Camber, General - Steel beams are cambered to compensate for dead load, shrinkage deflections and gradelines. The final position of the bottom flange is either flat or follows the grade, except in a sag vertical curve. A final negative camber should not be put in a beam. Profile grades can be incorporated into the camber by either added camber in the beam or by varying the deck flange build-ups along the beam. Sag vertical curves always require flange build-ups. Minimum flange build-ups should take into consideration the superelevation of the deck.

Slope adjustment or build-up for straight girders on curved roadways must also be considered. Deck grades are based on the roadway centerline and straight girders are offset at midspan from the centerline. As a result, the adjustment is the superelevation times the midspan offset. Additional beam camber at midspan or additional build-up at the ends will be required. See Figure 1.2.1.8A.

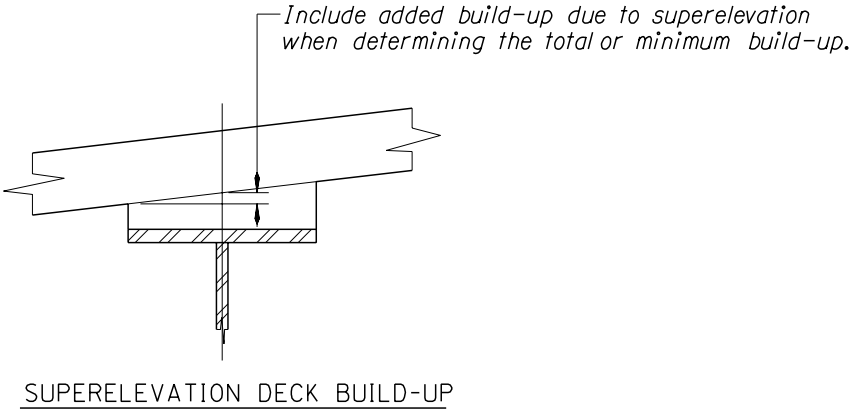

Figure 1.2.1.8A

Sketches of the camber options for simple spans are shown in Figures 1.2.1.8B through 1.2.1.8D.

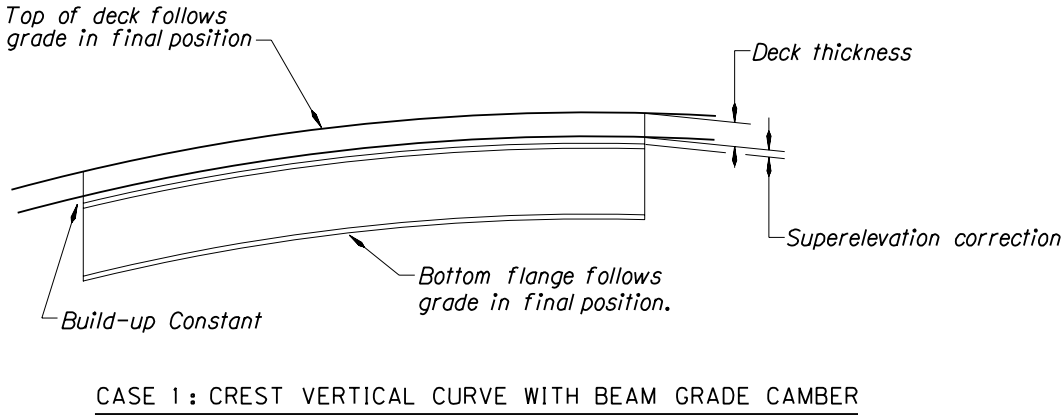

Figure 1.2.1.8B

1.2.1.8 Beam Camber - (continued)

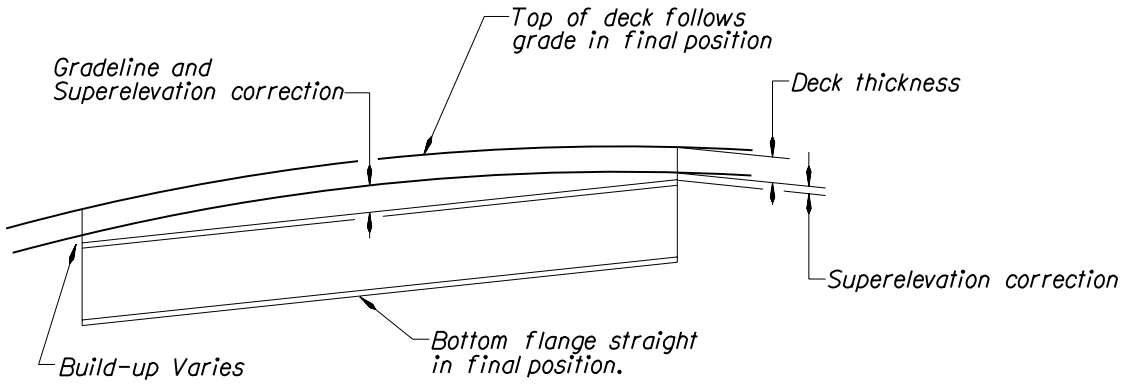

CASE 2 : CREST VERTICAL CURVE WITH BUILD-UP FOR GRADE CAMBER

Figure 1.2.1.8C

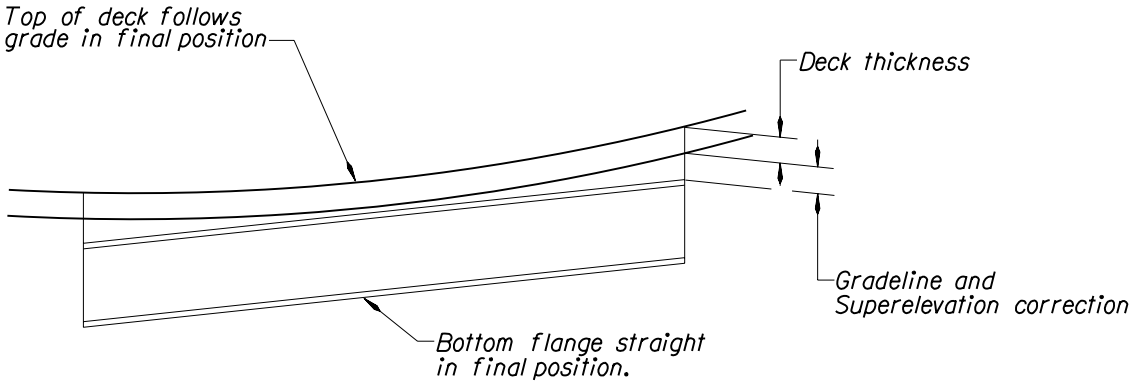

CASE 3 : SAG VERTICAL CURVE WITH BUILD-UP FOR GRADE CAMBER

Figure 1.2.1.8D

BACK

1.2.1.8 Beam Camber - (continued)

(2) Shrinkage Camber - To obtain shrinkage camber deflections, apply shrinkage moments at the beam ends as shown below.

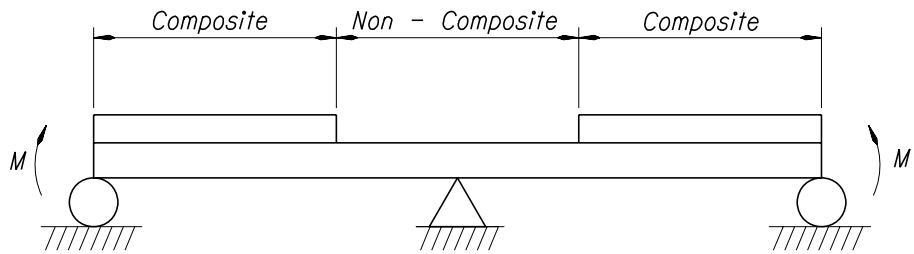

Figure 1.2.1.8E

m = moments applied to structure due to concrete shrinkage

= (0.0002"/in)$E_cA_cY_t$ in kip-inches

Where:

E_c = 3800 ksi for f'_c = 4500 psi

A_c = total area of concrete (in²)

Y_t = distance from cg of the deck to the cg of the composite section *. (inches).

* Note: Use 3n for modular ratio in calculating section properties.

(3) Camber Diagrams - Show the following data for steel beam camber on the contract drawings:

Grade line camber . . . . . _____

Dead load camber . . . . . _____

Superimposed
Dead load camber . . . . . _____

Shrinkage camber . . . . . _____

Total Camber . . . . . _____

Camber due to weight of
steel beam and
diaphragm . . . . . _____

Camber diagram examples are shown the following pages.

BACK

1.2.1.8 Beam Camber - (continued)

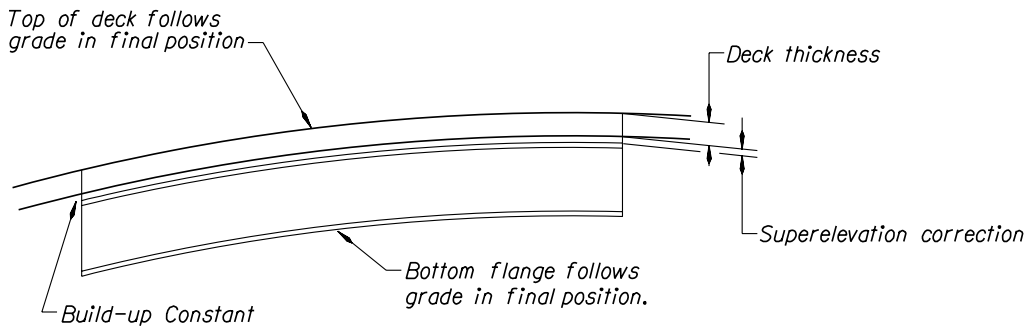

CREST VERTICAL CURVE WITH BEAM GRADE CAMBER

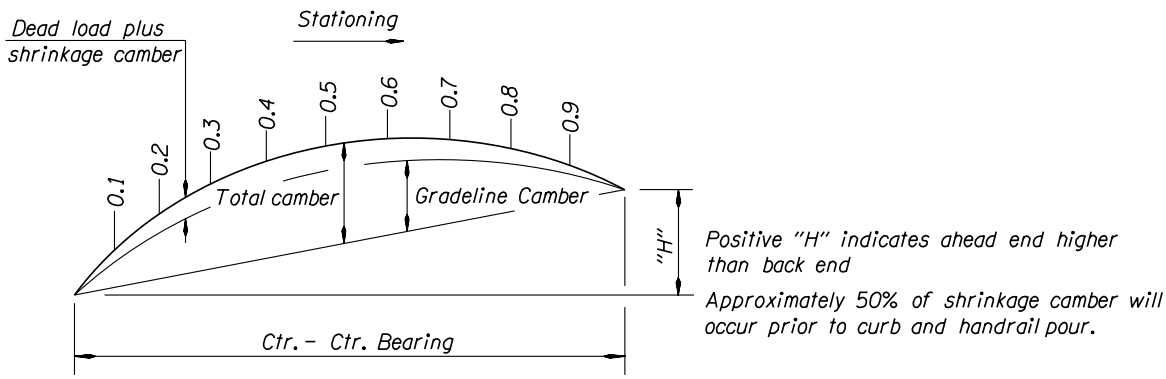

GIRDER CAMBER

Span	Item	Camber 0.1 Pt.	0.2 Pt.	0.3 Pt.	0.4 Pt.	0.5 Pt.	0.6 Pt.	0.7 Pt.	0.8 Pt.	0.9 Pt.	H inches
1	Beam Dead Load + Diaphragms	5/8"	1"	1 3/8"	1 1/2"	1 3/8"	1 1/8"	3/4"	3/4"	1/16"	+16 3/8"
	Deck Dead Load + Form	1 3/8"	2 1/2"	3 3/16"	3 1/4"	3 3/16"	2 3/16"	1 3/8"	11/16"	1/4"	
	Sidewalk, Rail & WS Dead Load	3/8"	5/8"	13/16"	7/8"	1 3/16"	15/16"	5/8"	5/16"	1/16"	
	Shrinkage	5/8"	1"	1 1/4"	1 1/4"	1 1/8"	1"	3/4"	1/2"	1/4"	
	Sub Total	3"	5 1/8"	6 5/8"	6 7/8"	6 3/8"	5 1/8"	3 1/2"	1 7/8"	5/8"	
	Gradeline	3/8"	3/4"	1"	1 1/8"	1 1/4"	1 1/8"	1"	3/4"	3/8"	
	Total	3 3/8'	5 7/8"	7 5/8"	8"	7 5/8"	6 1/4"	4 1/2"	2 5/8"	1"	
2	Beam Dead Load + Diaphragms	1/16"	1/4"	5/8"	7/8"	1 1/16"	1/16"	5/8"	5/16"	1/16"	+7 3/8"
	Deck Dead Load + Form	1/8"	3/4"	1 5/8"	2 7/16"	3 11/16"	3 1/4"	1 5/8"	13/16"	1/8"	
	Sidewalk, Rail & WS Dead Load	1/16"	1/4"	1/2"	13/16"	7/8"	13/16"	1/2"	1/4"	1/16"	
	Shrinkage	-1/4"	-3/8"	-3/8"	-3/8"	-3/8"	-1/4"	-1/8"	-1/8"	0	
	Sub Total	0	7/8"	2 3/8"	3 3/4"	4 1/4"	3 7/8"	2 3/4"	1 1/4"	1/4"	
	Gradeline	5/8"	1 1/4"	1 5/8"	1 3/4"	1 7/8"	1 3/4"	1 5/8"	1 1/4"	5/8"	
	Total	5/8"	2 1/8"	4"	5 1/2"	5 1/8"	5 5/8"	4 3/8"	2 1/2"	7/8'	

Figure 1.2.1.8F

BACK

1.2.1.8 Beam Camber - (continued)

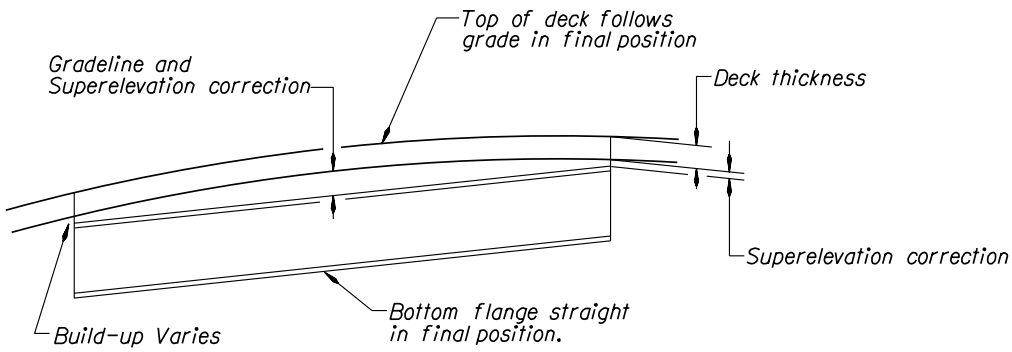

CREST VERTICAL CURVE WITH BUILD-UP FOR GRADE CAMBER

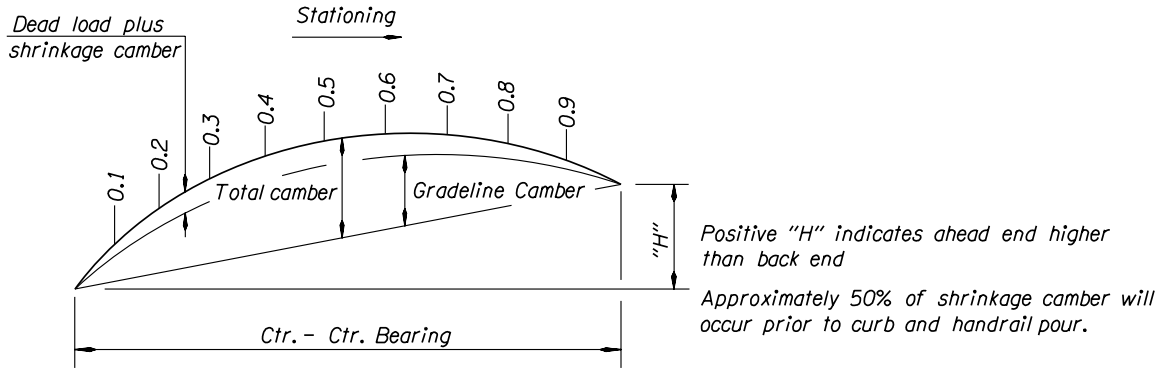

GIRDER CAMBER

Span	Item	Camber 0.1 Pt.	0.2 Pt.	0.3 Pt.	0.4 Pt.	0.5 Pt.	0.6 Pt.	0.7 Pt.	0.8 Pt.	0.9 Pt.	H inches
1	Beam Dead Load + Diaphragms	5/8"	1"	1 3/8"	1 1/2"	1 3/8"	1 1/8"	3/4"	3/4"	1/16"	+16 3/8"
	Deck Dead Load + Form	1 3/8"	2 1/2"	3 3/16"	3 1/4"	3 3/16"	2 3/16"	1 3/8"	11/16"	1/4"	
	Sidewalk, Rail & WS	3/8"	5/8"	13/16"	7/8"	1 3/16"	15/16"	5/8"	5/16"	1/16"	
	Shrinkage	5/8"	1"	1 1/4"	1 1/4"	1 1/8"	1"	3/4"	1/2"	1/4"	
	Sub Total	3"	5 1/8"	6 5/8"	6 7/8"	6 3/8"	5 1/8"	3 1/2"	1 7/8"	5/8"	
	Gradeline	None	None	None	None	None	None	None	None	None	
	Total	3"	5 1/8"	6 5/8"	6 7/8"	6 3/8'	5 1/8"	3 1/2"	1 7/8"	5/8"	
2	Beam Dead Load + Diaphragms	1/16"	1/4"	5/8"	7/8"	1 1/16"	1/16"	5/8"	5/16"	1/16"	+7 3/8"
	Deck Dead Load + Form	1/8"	3/4"	1 5/8"	2 7/16"	3 11/16"	3 1/4"	1 5/8"	13/16"	1/8"	
	Sidewalk, Rail & WS	1/16"	1/4"	1/2"	13/16"	7/8"	13/16"	1/2"	1/4"	1/16"	
	Shrinkage	-1/4"	-3/8"	-3/8"	-3/8"	-3/8"	-1/4"	-1/8"	-1/8"	0	
	Sub Total	0	7/8"	2 3/8"	3 3/4"	4 1/4"	3 7/8"	2 3/4"	1 1/4"	1/4"	
	Gradeline	None	None	None	None	None	None	None	None	None	
	Total	0	7/8"	2 3/8"	3 3/4"	4 1/4"	3 7/8"	2 3/4"	1 1/4"	1/4"	

Figure 1.2.1.8G

BACK

1.2.1.9 Deck Pouring Sequence

Deck pouring sequences for continuous steel spans must be developed according to the span and deflection characteristics of the particular bridge.

The general principal is to first place the sections that are outside of the negative moment zones. Subsequent placements may produce negative flexure in the previously placed sections (See C6.10.3.7 for commentary). Provide minimum negative flexure slab reinforcement per 6.10.3.7 of the AASHTO *LRFD Bridge Design Specifications* as needed. Set retarding admixture may be required to reduce excessive induced stresses in adjacent spans placed sequentially.

Any changes to the pouring sequence during construction must be analyzed by the Contractor's Engineer to determine any effects on stresses and camber. This review will need to be completed early in the process, because it may effect the beam fabrication.

The following steps are a general rule for pouring sequence of continuous steel bridges.

1. Pour (1) consists of all positive moment areas along the bridge which will not cause upward deflection on other span/s. No waiting period is required between these spans.
2. Pour (2) consists of multiple separate placements of all positive moment areas of spans that cause upward deflection on other spans. The wait period between these span placements is a minimum of three days after the last pour (1) ended and reaches 70% of final strength. If multiple spans are placed sequentially in the same pour, set retarding admixture may be required to reduce excessive induced stresses in adjacent spans.
3. Pour (3) consists of all negative moment areas. The pour can be placed a minimum three days after the last pour (2) ended.

The pouring sequence of three span continuous balanced bridges is shown below:

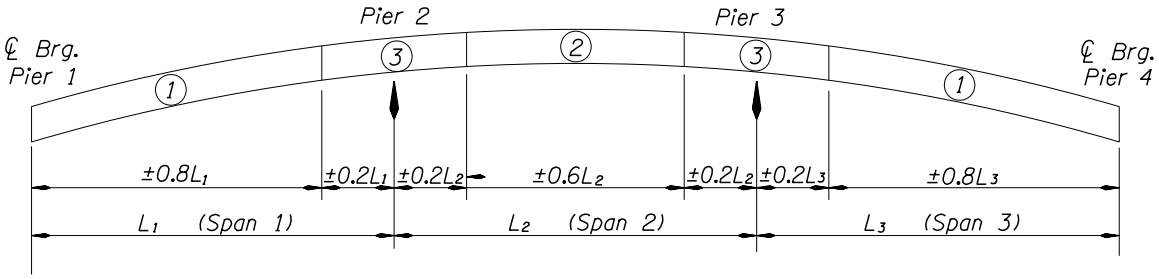

DECK POURING SEQUENCE - STEEL SPANS

POURING SEQUENCE

1. Make Pours (1). May be made simultaneously or separately as desired by the contractor.
2. After a minimum of 3 days after the completion of Pour (1) and concrete has reached 70% full strength. Make Pour (2).
3. After minimum of 3 days after completion of Pour (2), make Pours (3). Pours (3) may be made simultaneously or separately.

Note: Deck concrete shall be placed and screeded parallel to bents.

Figure 1.2.1.9A

The deck pouring sequence for bridges designed continuous for live load consists of two pours. Pour (1) for all positive moment areas except for closure pours. Pour (2) consists of all closure pours at interior and/or end bents a minimum of three days after pour (1).

BACK

1.2.1.10 End Bents Detailing

It is desirable to eliminate end bent joints or make construction jointless to protect the girder steel from leaking joints.

Use the extended deck detail or semi integral abutments similar to Figures 1.2.1.10A or 1.2.1.10B.

Use the integral abutments when geometry and span length allow. See Figure 1.2.1.10C.

Where joints can not be avoided, show a paint detail at the end of plate girders. Paint end of the girder for a length at least 1.5 times the depth of the girder and all attachments within this limit. The paint color is to match the developed weathering steel patina 2.5 years after completion of the bridge construction. See Figure 1.2.1.10D.

EXTENDED DECK DETAILS

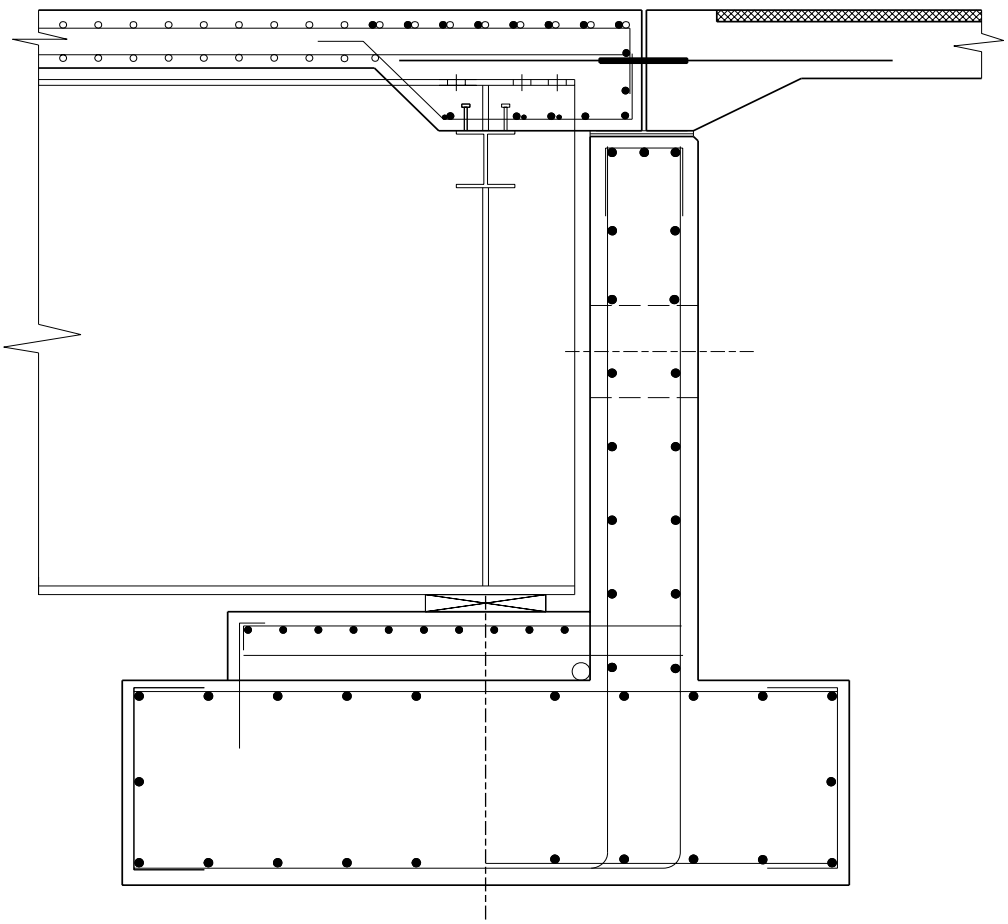

Figure 1.2.1.10A

BACK

1.2.1.10 End Bents Detailing - (continued)

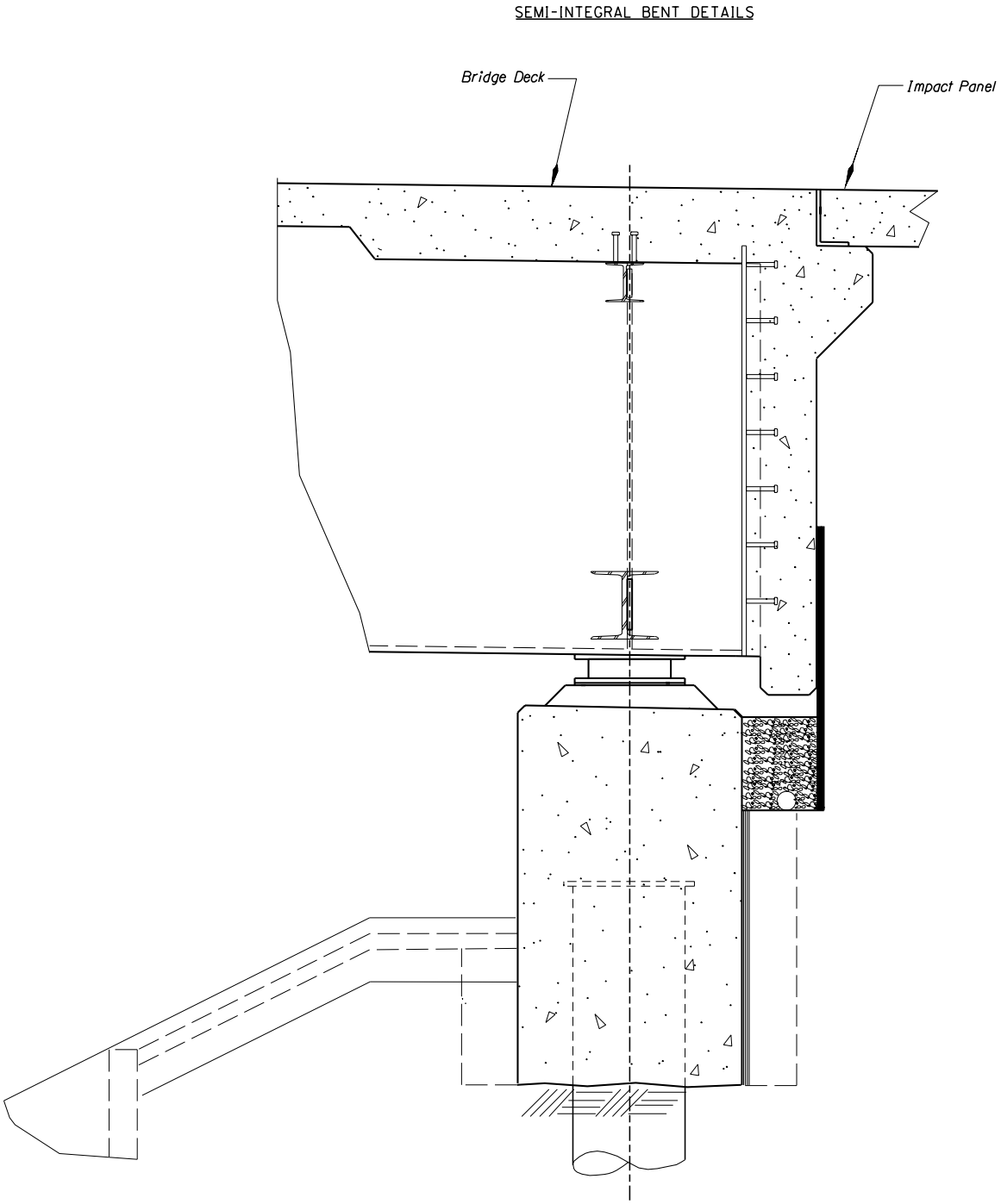

Figure 1.2.1.10B

1.2.1.10 End Bent Detailing - (continued)

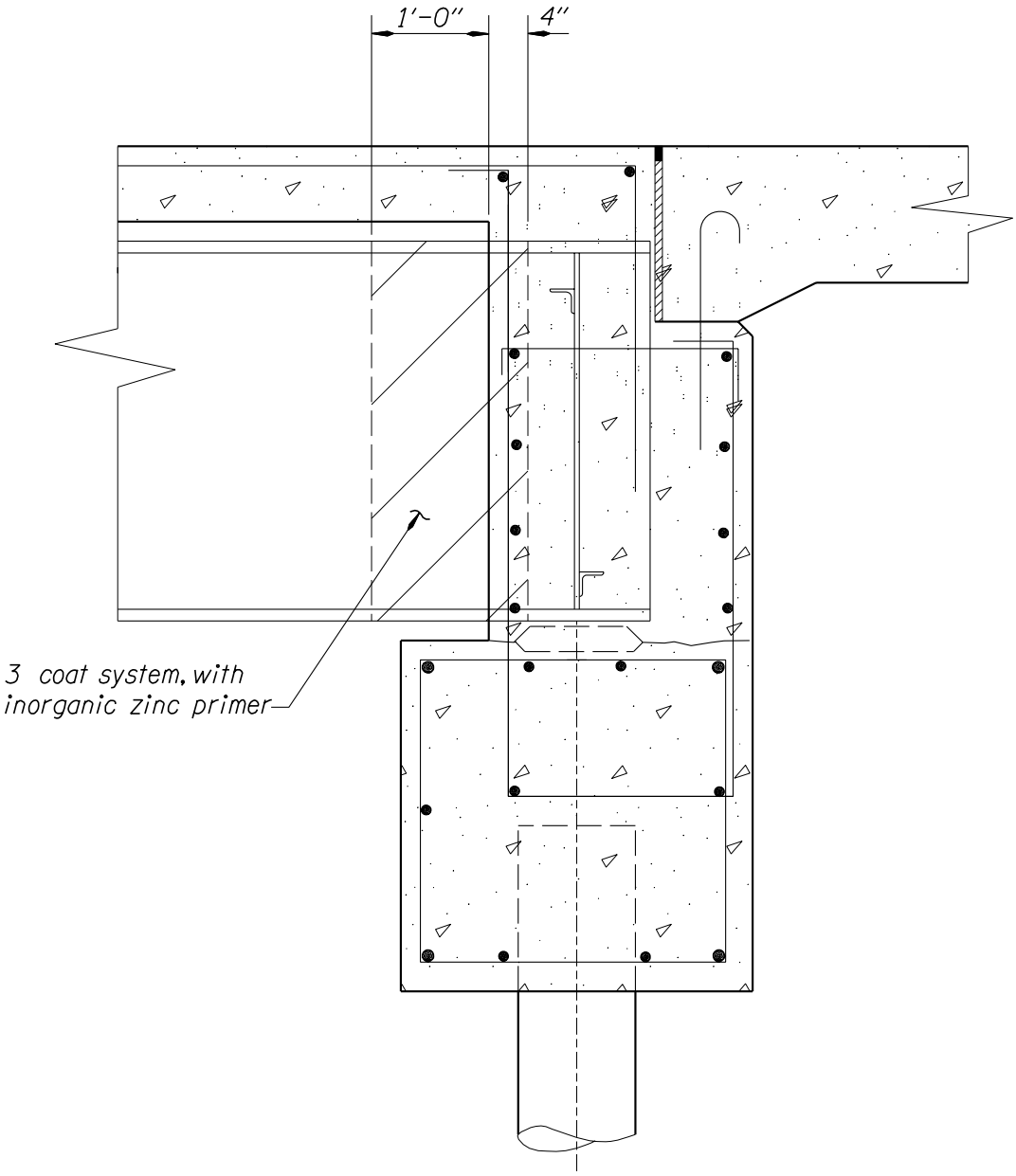

Figure 1.2.1.10C

BACK

1.2.1.10 End Bents Detailing - (continued)

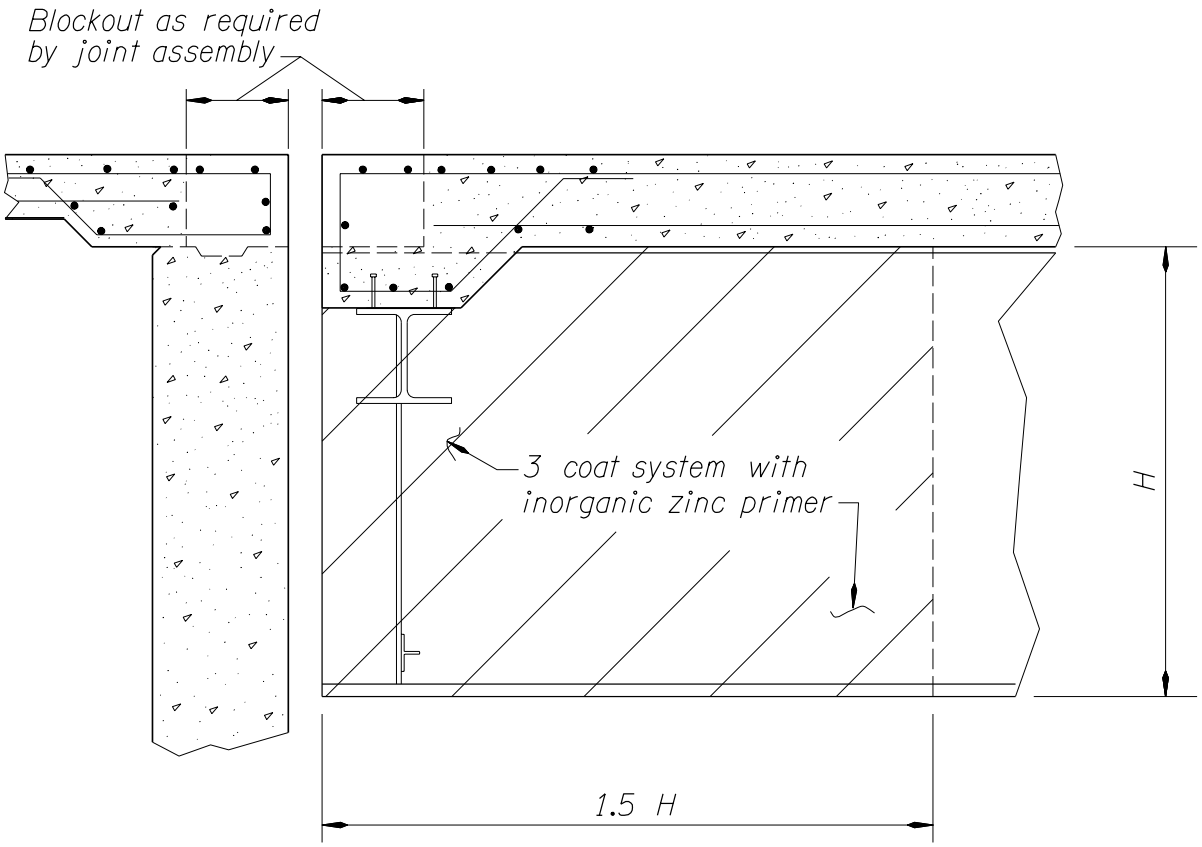

Figure 1.2.1.10D

1.2.1.11 Expansion Joint Blockouts

Show a blockout detail on the plans to allow the expansion joint assembly to be placed a period of time after the final deck pour. Providing a blockout makes the adjacent deck pour easier, provides smoother deck transition to joint, and allows the majority of the superstructure shrinkage to occur prior to joint assembly placement.

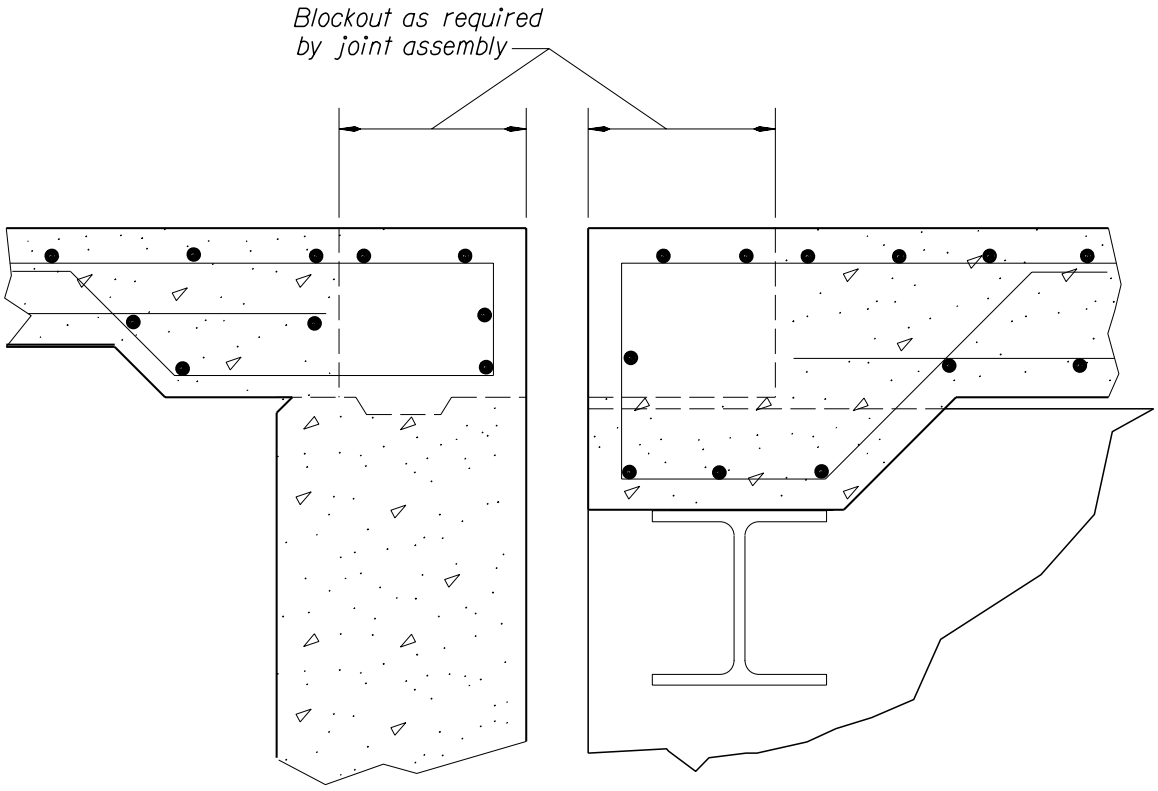

Figure 1.2.1.11A

1.2.1.12 Bearings

Due to high cost, try to avoid using built up steel bearings, pot bearings, and spherical bearings.

Design integral jointless bridges or use elastomeric bearings wherever possible.

Use circular elastomeric bearings on curved steel girders.

See also Section 1.1.19.

1.2.1.13 Structure Widenings

Generally, to avoid transferring dead loads from the widening to existing beams, diaphragms are temporarily connected to resist lateral loads only and a closure pour is made between the deck pours. An example is shown below.

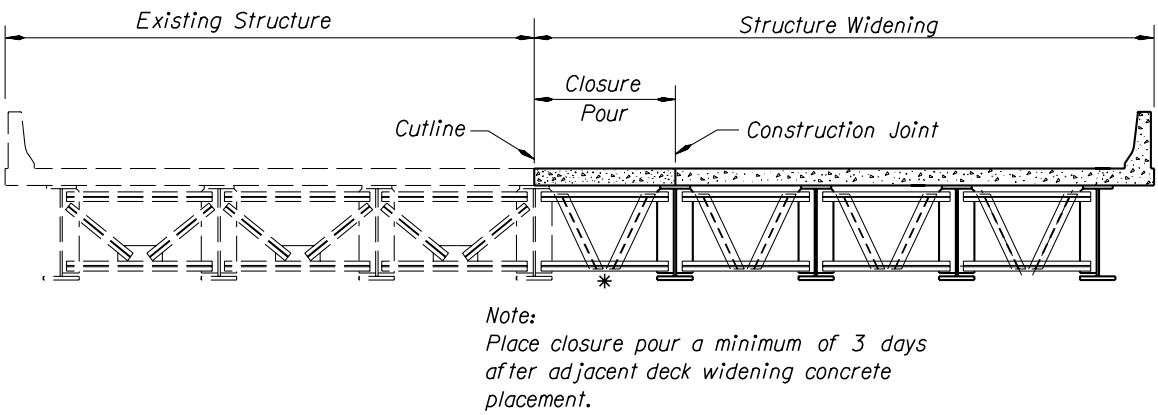

Figure 1.2.1.13A

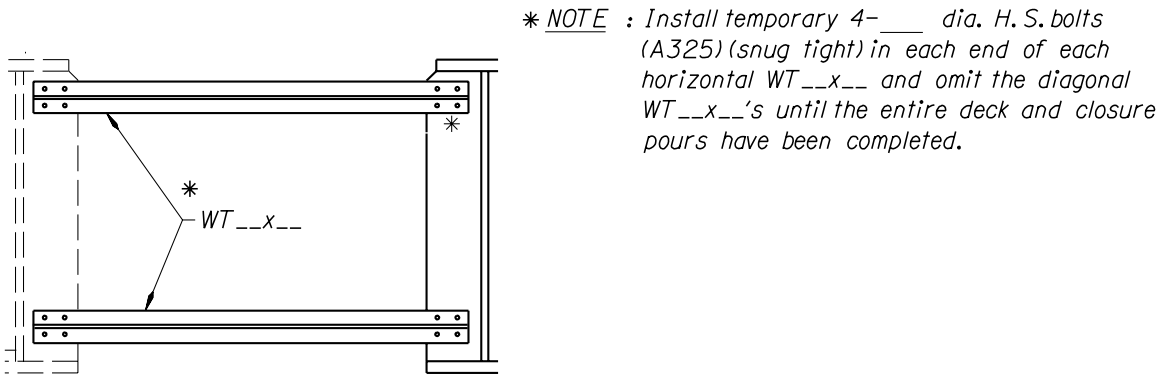

Figure 1.2.1.13B

1.2.2 Welding

1.2.2.1 Welding, General

General categories of welding - The following three categories loosely describe the most common types of welding needed for design work in roadway and bridge sections.

Incidental Structures (AWS D1.1): Welding under this category consists of light structural joining such as handrails, fencing, and sheet metal products. In general the weld is not required to fully develop the strength of the joining parts. Visual inspection of the final product is all that is expected.

General Structural Welding (AWS D1.1): Welding under this category consists of partially or fully developing the strength of the joining parts such as pile splices and attachments, guard rails, signing and lighting support, expansion joints(unless prefabricated by an approved supplier), seismic restraint fixtures and bearings (unless directly welding to main structural elements of a bridge). In general the weld will develop the ultimate strength of the joining parts but is not expected to provide maximum fatigue life *unless nondestructive testing is specified for acceptance.*

Structural Welding of Reinforcing Steel (AWS D1.4): Welding under this category consists of splicing and/or anchoring either new construction or existing reinforcing steel in concrete columns, girders, and bridge decks. The particular weld joint design usually consists of either flare-bevel welds or butt joints with back up bars.(see Section 1.2.7.6 for examples) In general it is desired to develop the full strength of the reinforcing steel to be joined. Almost any type of reinforcing steel can be successfully welded provided the chemistry of the steel is known (from either mill certifications or field testing) and an appropriate welding procedure is developed and followed. Unknown steels need to have a sample extracted (approximately 2 to 4 grams) and testing for chemistry. The welding procedure is developed from AWS D1.4 using the carbon equivalent method. This type of welding is almost always performed in the field and thus needs to be monitored by a certified welding inspector (CWI). Acceptance is usually based on visual examination but other methods can be used if the designer is concerned about fatigue. Make sure that either the Contractor or the State provides a CWI during field welding.

Bridge Welding (AWS D1.5): Welding under this category consists of fabricating or modifying any main load path carrying members of a bridge that have some or all portions that experience tensile stresses under normal loads. This includes girders, floor beams, stringers, trusses, and hanger assemblies. The member does not necessarily have to be fracture critical. In general the welding is expected to develop both full ultimate strength of the joining parts and maximum fatigue performance. Joint toughness and nondestructive testing are typically required for acceptance.

Certification of Steel Fabricators: Special Provision Section 560.30 requires the American Institute of Steel Construction (AISC) Category CBR (Major Steel Bridges) Certification for fabricators of structural steel bridges. If the structure is Fracture Critical, the fabricator also is required to have the AISC Fracture Critical endorsement. These certification requirements can be deleted only by the Fracture Control Engineer on the Preservation Team.

BACK

1.2.2.1 Welding, General - (continued)

Typical pathways for successful welding in your design-

Incidental welding:

1) Specify the welds needed on the drawings (type, size, and length). If you need advice the welding engineer will help.

2) These welds do not need to be reviewed unless you are looking for input. Typically the welding engineer does not stamp drawings for this category of welding (helps reduce confusion during the acceptance process).

3) In general welding procedure specifications and welder certification are not required to be submitted.

4) Quality assurance will be based on general appearance (visual testing) only. If you want a trained person to inspect the workmanship send a copy of the plans to the Portland Materials Inspection Crew. The same inspectors will also check for quality of painting and galvanizing. If the workmanship is poor then the parts can be rejected.

General Structural Welding:

1) Specify the welds needed on the drawings (type, size, and length). If you need advice the welding engineer will help*. If you think that a significant effort is going to be required for quality assurance (QA) please include that cost in your construction budget.* Even though the Standard Specifications invoke AWS D1.1 welding code for all incidentals structures, it is recommended that the following statement be included on the drawings (usually the plan and elevations):

"All welding shall conform to the AWS D1.1 Structural Welding Code."

2) These welds do not need to be reviewed but typically are. Typically the welding engineer does not stamp drawings for this category of welding (helps reduce confusion during the acceptance process).

3) Generally welding procedure specifications (WPS) and welder certification are required to be submitted and approved. The welding engineer typically reviews and stamps these documents. Any shop drawings that have welding shown are not legally approved until the WPS are approved under AWS D1.1.

4) Quality assurance is typically based on visual inspection by a certified welding inspector (CWI) and may also incorporate nondestructive testing such as ultrasonic (UT), radiographic (RT), and magnetic particle (MT) testing if specified on the design drawings. Various stages of the fabrication process may also be monitored if necessary. It is recommended that a copy of all plans and specifications that require this category of welding be sent to the Portland Materials Inspection Crew.

BACK

1.2.2.1 Welding, General - (continued)

Reinforcing Steel Welding:

1) Specify the welds needed on the drawings (type, size, and length).

2) In the general notes for the job, put the following:

"All reinforcing steel welding shall conform to AWS D1.4 Structural Reinforcing Steel"

Typically the Welding Engineer will review the design drawings and approve or reject the submitted welding procedures and welder qualifications.

3) If the steel is not ASTM A615 or A706 a field chemistry sample needs to be extracted and analyzed for the carbon equivalent. The welding procedure shall be based on this information. If the steel is A615 or A706 the D1.4 welding code has recommended heat inputs.

4) Inform the Portland Materials Office of the work and have a CWI review the welding procedure, welder certification and observe the welding.

Bridge Welding:

1) Specify the welds needed on the drawings (type, size, and length). Calling out the specific weld ID number (i.e. TC-U4a is an example) is preferable but not required. If you need advice the welding engineer will help. *Typically this category of welding requires a significant Quality Assurance (QA) effort so please include this in your construction cost estimate.*

Even though the Standard Specifications invoke AWS D1.5 welding code for all bridge welding it is recommended that the following statement be included on the drawings (usually the plan and elevations):

“All welding shall conform to the AWS D1.5 Bridge Welding Code.”

2) Typically both design drawings and shop submittals are reviewed and signed by the welding engineer.

3) Welding procedure specifications (WPS) and welder certification are required to be submitted and approved. The welding engineer reviews and stamps these documents. Any shop drawings that have welding shown are not legally approved until the WPS are approved under AWS D1.5.

4) Quality assurance is based on a more complicated Owner/Fabricator relationship that involves frequent inspections during the entire fabrication and erection process. Most individuals involved have stringent requirements for their duties including certified welders, inspectors, fabricators, and testing personnel. Most welding in this category requires some form of nondestructive testing for acceptance. Theoretically all materials and processes are traceable with archived documentation. A copy of all plans and specifications that require this category of welding shall be sent to the Portland Materials Inspection Crew.

BACK

1.2.2.2 Fillet Welds

When adequate structural performance from fillet welds in "T" and corner joints can be obtained, use fillet weld in preference to groove welds. Fillet welds can be non-destructively inspected with greater certainty of result and at lower cost. The minimum fillet weld size for prequalified joints is shown below:

Material Thickness of Thicker Part Joined (T)	Minimum Size* of Fillet Weld
To 3/4" inclusive	1/4" **
Over 3/4"	5/16" **

* Except that the weld size need not exceed the thickness of the thinner part joined. For this exception, take particular care to provide sufficient preheat to ensure weld soundness.

** Welds of this size must be made in a single pass.

Size fillet welds in accordance with AASHTO LRFD Design Specifications.

Web to flange connection

The minimum fillet weld necessary to join the flange to the web shall be used. This size will vary along the length of the girder depending on the size of the plates being joined.

<u>Shear stress capacity of fillet welds (equal legs):</u>

- <u>LRFD Design</u> - $F_v = 0.6 \times 0.8 F_{exx} \times 0.707"t"$ (AASHTO 6.13.2.4b)

  where: F_{exx} = 58,000 psi for Grade 36 Steel
  F_{exx} = 65,000 psi for Grade 50 Steel
  "t" = length fillet leg

Fillet Weld Capacity - LRFD Design (lb/in)		
Leg Length "t"	Grade 36 Steel	Grade 50 Steel
3/16'	3690	4135
1/4"	4920	5510
5/16"	6150	6890
3/8"	7380	8270
7/16"	8610	9650
1/2"	9840	11,025
9/16"	11,070	12,405
5/8"	12,300	13,785

Figure 1.2.2.2A

BACK

1.2.2.3 Flange Welds

The design tensile stress in butt welded joints may equal the allowable stress in the base metal.

Show flange butt weld splices as in the detail below. Include this detail on all steel structure plans. Indicate the type of butt weld splice for each splice on the plans. This may be accomplished by:

- Adding the word "tension" or "compression", whichever is the case, to the tail of the weld symbol.
- Indicating which flanges or which portions of the flanges are in compression (C) and which are in tension (T).

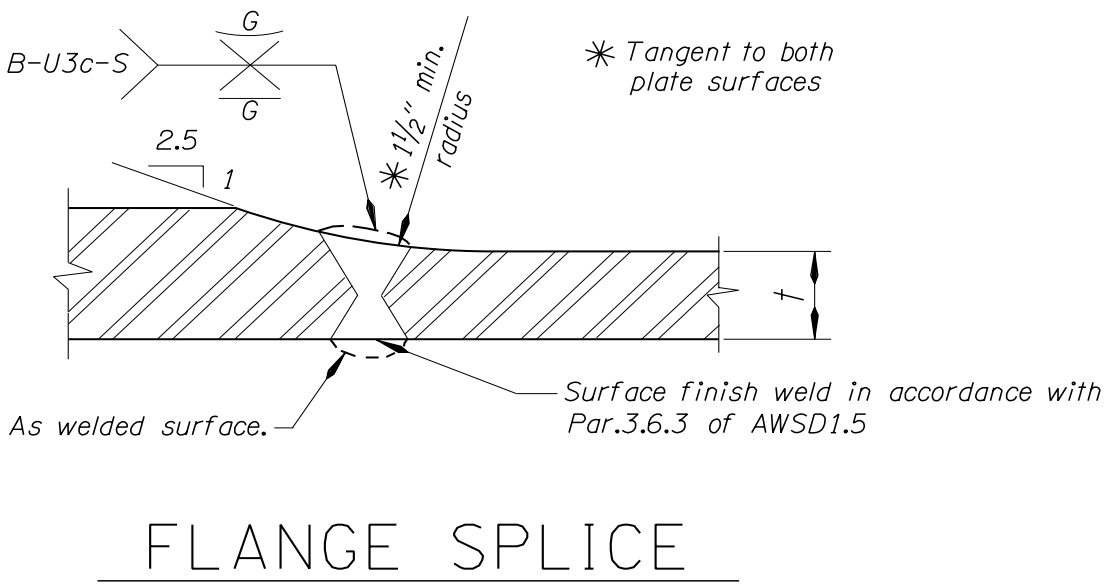

Figure 1.2.2.3A

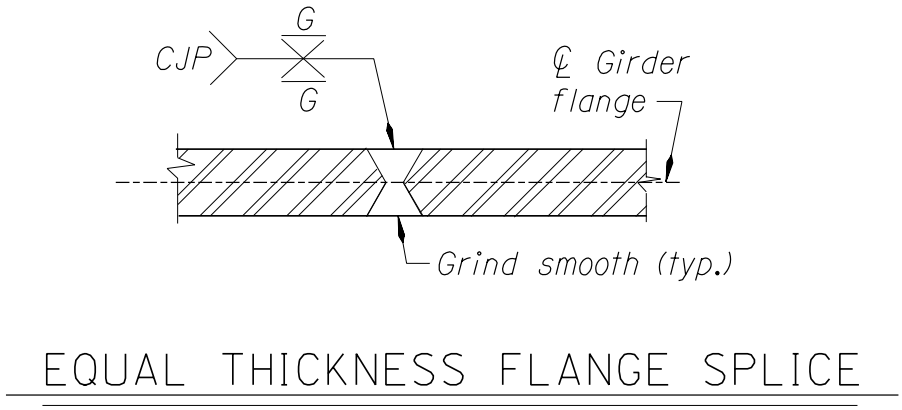

Figure 1.2.2.3B

1.2.2.4 Welded Web Splices in Steel Bridge Girders

Use complete joint penetration butt weld in web splices. The weldments reinforcing shall be ground off 100% of all web splices. To facilitate NDE during fabrication, specify on the design drawings which portion of the girder webs are tension and compression. (see Figures 1.2.2.4A and 1.2.2.4B)

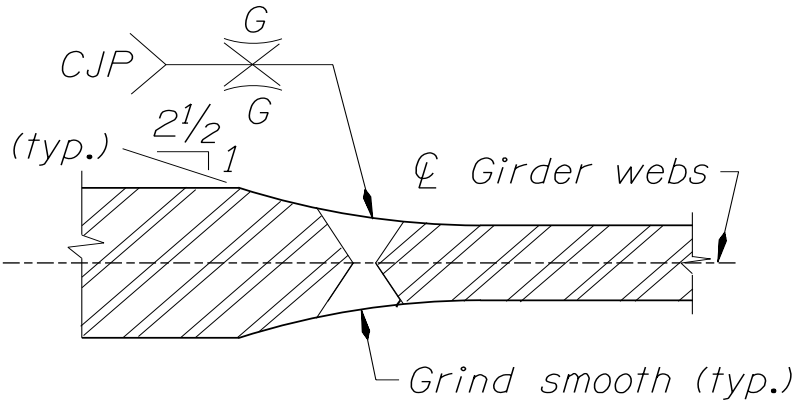

UNEQUAL THICKNESS WEB SPLICE

Figure 1.2.2.4A

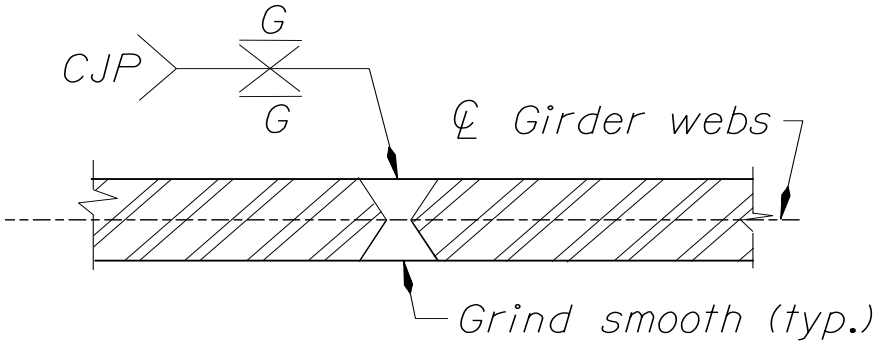

EQUAL THICKNESS WEB SPLICE

Figure 1.2.2.4B

1.2.3 Traffic Structures Mounted on Bridges

The following traffic structures may be located on bridges, although standard traffic lighting poles are the only traffic structures with standard bridge connection designs. The placement of other traffic structures on bridges should be discouraged. In special cases where other (larger) traffic structures must be located on the bridge, they should be connected directly to the bent.

- Standard lighting poles
- Camera poles
- Structure mounted signs not exceeding 7' in height (signing for traffic passing under bridge)
- Miscellaneous small signs (signing for traffic on bridge)

Traffic Section will be responsible for all aspects of design and for construction assistance for traffic structures located on bridges, except as noted below. Early in the project, Traffic Section will provide Bridge Section with maximum structure base reactions and other information necessary for Bridge Section to design the connection between the traffic structure and the bridge.

The decision on whether the traffic structure may be located on the bridge, and the exact location of the traffic structure on the bridge will be made by the bridge designer in conjunction with the project team.

The Bridge designer will be responsible for the connection between the traffic structure and the Bridge, including the anchor bolts, and will review or check the shop drawings associated with the bridge design responsibilities.

BACK

1.2.4 Galvanizing

1.2.4.1 Processes

Galvanizing is a process of applying a sacrificial metal (zinc) to a base metal. The zinc will corrode, or sacrifice itself, to protect the base metal. Hot-dip galvanizing involves cleaning the items with a combination of caustic and acidic solutions and the dipping them into a tank of molten zinc for a specified period of time. After removal, small items are spun to remove excess zinc.

Mechanical galvanizing involves cleaning as mentioned above and then loading the items in a multi-sided rotating barrel. The barrel contains a mixture of various sized beads and water. As the barrel turns, chemicals and powdered zinc are added. The collision between the items, the glass beads and zinc causes the zinc to cold weld to the part. Powdered zinc is added until the required thickness is obtained.

Hot-dip galvanizing has proven to provide better long term corrosion protection and should be required for all galvanized items.

1.2.4.2 Detailing

To ensure proper hot-dip galvanizing, venting and drain holes must be provided in details. These insure proper circulation and removal of cleaning solutions and the molten zinc. They may also prevent potential explosions during dipping caused by trapped air.

A minimum vent opening of 25 to 30 percent of the cross sectional area of a tubular section should be provided if full open venting is not possible. Provide drains holes at closed corners or clip all corners at gusset plates to allow complete drainage.

1.2.4.3 Silicon Control

The silicon content of the steel influences the corrosion resistance and strength of the galvanized coating and the thickness of the zinc layer. The silicon content of the steel must be held within either of the range of 0 to 0.04 percent, or 0.15 to 0.25 percent to obtain and maintain a pleasing appearance. All members that will have visual impact should be called out on the drawings with "GALVANIZE-CONTROL SILICON". Examples of these members are the chords, posts and diagonals of sign bridges; arms and shafts of luminaire, sign and signal support structures; steel traffic rail posts and railing members and pedestrian railings.

For economic reasons, silicon need not be controlled in galvanized structural members that are hidden from motorist view or are too small to have significant visual impact. Generally, these members that are too small to have significant visual impact are steel shapes whose least dimension does not exceed 3 inches.

An example of an exception is pedestrian rail members that should have silicon control. Examples of hidden members and others which for practical reasons do not require silicon control are base plates and guard rail connection plates, flex-beam rails and their posts and single-post, breakaway sign posts.

The general notes on each contract drawing that includes members are to be called out as "Galvanize-Control Silicon". The specification for control of silicon in steels to be galvanized is included in the Standard Specifications for Construction.

1.2.5 Cables and Turnbuckles

1.2.5.1 Cables and Turnbuckles, General

Structural wire rope (cable) may be used in seismic retrofit and safety cable applications. For these applications, cable must have zinc coating for corrosion protection. Designers should specify ASTM A 603 structural wire rope with a Class C coating. This type of cable is generally available by special order at a minimum of 10,000 feet.

Two sizes of cable are recommended. 7/8" diameter cable is recommended for most seismic retrofit applications. 1/2" diameter cable is recommended for safety cable applications and seismic retrofit applications where the cable must be wrapped around tight corners. Bending radius for cable should be as follows:

	suggested	minimum
1/2" diameter cable . . .	18"	11"
7/8" diameter cable . . .	32"	18"

Caltrans uses 3/4" cable manufactured to Federal Specification RR-W-410D. The only difference between this cable and A 603 cable is the quantity of zinc coating. ASTM A603 (with Class C coating) requires three times the zinc quantity. RR-W-410D 3/4" cable, however, can be bent around a 4" minimum radius. For applications where this increased flexibility is required, RR-W-410D cable may be substituted. RR-W-410D cable will not be stockpiled, so the Designer must verify the availability of the material if the project quantity is less than 10,000 feet. Do not use RR-W-410D cable for coastal applications.

1.2.5.2 General Notes for Cables and Turnbuckles

Use the following general notes on the plans for turnbuckles and cable connections in seismic retrofit and/or safety cable applications:

> Turnbuckles shall be Type I and hot-dip galvanized meeting Federal Specification FF-T-791B, and shall develop the minimum breaking strength of the connecting cable. Turnbuckle take-up shall be 24" unless shown otherwise on the plans.
>
> Socket connections for cables shall be hot-dip galvanized and shall develop the minimum breaking strength of the connecting cable.

BACK

1.2.5.3 Special Provisions for Cables

Under the heading "Steel Cable (Structural Wire Rope) for Seismic Restraints & Safety Cables" use the following:

[When using only 7/8" wire rope for seismic retrofit:]

Cable for seismic restraint devices shall be zinc coated 7/8" diameter structural wire rope conforming to ASTM A603 with Class C coating throughout. Cable construction shall be 6 x 7 with a Wire Strand Core (WSC). Class A coating will be allowed for the center wire in the center strand. Supply cable on spools with a cable length of at least 2000 feet, but not more than 5000 feet. Minimum breaking strength = 46,000 lb.

[When using only 3/4" RR-W-410D wire rope for seismic retrofit:]

Cable for seismic restraint devices shall be zinc coated 3/4" diameter wire rope conforming to Federal Specification RR-W-410D. Cable construction shall be 6 x 19 with a Wire Strand Core (WSC) or Independent Wire Rope Core (IWRC). Cable shall be manufactured from improved plow steel and shall have a minimum breaking strength of 21,000 lb.

[When using only 1/2" wire rope for safety cable:]

Wire rope for safety cables shall be zinc coated 1/2" diameter structural wire rope conforming to ASTM A603 with Class C coating throughout. Cable construction shall be 6 x 7 with a Wire Strand Core (WSC). Class A coating will be allowed for the center wire in the center strand. Supply cable on spools with a cable length of at least 5000 feet, but not more than 10,000 feet. Minimum breaking strength of 21,000 lb.

[When using both 1/2" and 7/8" wire rope for seismic retrofit:]

Cable for seismic restraint devices shall be zinc coated structural wire rope conforming to ASTM A603 with Class C coating throughout. Cable diameter shall be 1/2" or 7/8" as shown on the plans. Cable construction shall be 6 x 7 with a Wire Strand Core (WSC). Class A coating will be allowed for the center wire in the center strand. Supply cable on spools with cable lengths as follows:

	minimum	maximum
1/2" diameter	5000'	10,000'
7/8" diameter	2000'	5000'

Minimum breaking strength of cable shall be 21,000 lb. for 1/2" cable and 63,600 lb. for 7/8" cable.

BACK

1.2.5.4 Special Provisions for Turnbuckles

Use the following special provisions for turnbuckles in seismic retrofit applications:

- Test turnbuckles according to the requirements outlined in Federal Specification FF-T-791B.
- Provide either a jam nut or lock wire at each end of each turnbuckle. Lock wires shall be 14 gage or heavier and shall be either hot-dip galvanized or plastic coated.

Use the following special provisions for turnbuckles in safety cable applications:

- Test turnbuckles according to the requirements outlined in Federal Specification FF-T-791B.
- Provide a lock wire at each end of each turnbuckle. Lock wires shall be 14 gage or heavier and shall be either hot-dip galvanized or plastic coated.

1.2.5.5 Design Properties

Modulus of elasticity for cable (non-prestretched) = 10,000 ksi.

Approximate gross metallic area and minimum breaking strength:

	Area (in^2)	Strength (lb)
1/2” diameter cable (A 603)	0.119	21,000
3/4” diameter cable (RR-W-410D) . .	0.222	46,000
7/8” diameter cable (A 603)	0.361	63,600

BACK

1.2.6 Bolts and Connections

Design all high-strength bolted connections as slip-critical connections unless there are compelling reasons not to do so.

1.2.6.1 High Strength Bolts

<u>High-Strength Bolt Use Guidelines:</u>

- A325 - Headed structural bolt for use in structural connections. These may be hot-dip galvanized. Do not specify for anchor bolts.
- Use Type 3 bolts conforming to AASHTO M164 (ASTM 325) when specifying weathering steel.
- A449 - Steel bolts and studs for general applications including anchor bolts. Recommended for use as anchor bolts where strength equal to A325 is required.
- A490 - Alloy steel headed structural bolt for use in structural connections. Use of these type of bolts is not recommended. These bolts should not be galvanized because of high susceptibility to hydrogen embrittlement. Instead of galvanizing, require two or three coats of approved zinc rich paint. Do not specify for anchor bolts.

BACK

1.3 TIMBER BRIDGE DESIGN AND DETAILING

1.3.1 Timber Bridge Locations

Timber structures may be considered as an alternate to concrete structures on low volume highways or roads with and ADT of less than 500, especially for sites located away from possible concrete sources. Timber bridges are generally best suited to the drier climate east of the Cascade Mountains. Consult the individual Regions in the early stages of a project to determine whether a timber bridge is desired.

1.3.2 Timber Design and Details

Before specifying structural grades for timber members, check with the fabrication industry for actual availability.

Unless timber is submerged, it may be considered dry for design.

ODOT does not design composite wood-concrete structures and has no corresponding construction specifications.

For structures carrying only pedestrian and/or bicycle traffic, the maximum allowable live load deflection is:

- For simple or continuous spans span/360
- For cantilever arms arm length/135

<u>Glued laminated timber bridges</u>

Glued laminated timber bridge single spans are generally feasible up to 50 feet. To achieve longer spans, consider cantilever techniques. The width of glued laminated beams should be generally be limited to 10-3/4” or less, but 12-3/4”, 14-3/4”, and 16-3/4” widths are available for extra cost.

Some consideration should be given to performance specification for glued laminated timber members. Identifying actual stresses for bending, horizontal shear, etc., is preferred by the fabrication industry instead of specifying an actual glued laminated timber grades.

The preference of the Bridge Section at this time is the use of a non-interconnected glued laminated timber deck as opposed to an interconnected glued laminated timber deck. A longitudinal timber stiffener under the deck between longitudinal beams for transverse deck bridges may be beneficial for differential deflection control.

A glued laminated longitudinal deck bridge is a possible solution for short spans (under 25 feet) with a tight freeboard clearance requirement. These deck members could be used in a continuous span arrangement to increase member efficiency.

All glued laminated timber decks should have a waterproofing membrane with an asphalt wearing surface.

For smaller timber members, such as posts, rails, etc., specifying solid sawn timber as an option to glued laminated timber may be more cost effective.

Timber substructures are not recommended.

1.3.3 Timber Connections

Use of the "Weyerhaeuser clip" to connect timber decking to timber beams allow for easy fabrication and installation of the timber members.

Steel diaphragm beams, as opposed to timber diaphragm beams, between longitudinal glued laminated timber beams are recommended.

Use slotted holes whenever possible in the steel connectors to allow for shrinkage and expansion of the wood, and for construction tolerances.

1.3.4 Timber Rails

A crash-tested rail has been completed for a longitudinal glued laminated timber deck bridge. Several other glued laminated timber bridge configurations will be crash-tested in the near future. Thrie beam railing can be used as an alternate in lieu of timber.

1.3.5 Preservative Treatments

Pentachlorophenol Type A (heavy solvent) or Pentachlorophenol Type C (light solvent) is recommended for most locations as a preservative treatment.

Eliminate all field cuts and bores if possible. Any field modifications should be treated with copper napthanate.

1.3.6 Field Installation

Shop assembly of the timber bridge components immediately after fabrication is recommended to eliminate any possible future field installation problems, especially on more complicated projects.

Field staking of the structure before fabrication is recommended to eliminate any future installation problems.

BACK

1.4 MISCELLANEOUS STRUCTURE DESIGN AND DETAILING

1.4.1 Retaining Structures

1.4.1.1 Retaining Structures, General

Retaining walls that support bridge bents will typically be designed by the structure designer, and drawings will be the same size and included with the structure drawings.

Refer to Geo-Environmental Section *Retaining Structures Manual*.

1.4.2 Soundwalls

1.4.2.1 Soundwalls, General

Since 1989, AASHTO has provided a design manual *Guide Specification for Structural Design of Sound Barriers*. These guidelines, plus the additions listed below, are to be used for designing all soundwalls.

It is now necessary to investigate the soil condition specific to the soundwall site and then identify the soil type on the Soundwall Plan and Elevation sheet. It is recommended that this be taken care of early in the project's development.

The new AASHTO Guide Specifications allow less lateral soil capacity, especially when the ground around the soundwall is sloped, as when located on a berm. Conditions for which the standard drawings were designed include:

- Average or Good soil types. Region offices must perform a soil investigation of the site in the preliminary stage of design. The Plan and Elevation sheet must specify the soil type, which will affect the footing depths.

- Exposure B1. See the 1989 AASHTO *Guide Specifications for Sound Barriers*, Article 1-2.1.2 for a definition of this case. See Figure 1.5.2A, in this manual for the Oregon map defining wind speed zones for the 50 year recurrence intervals.

- A maximum 3' differential in the soil elevation from one side of the soundwall to the other was assumed.

- Pilaster footings were designed by the Load Factor Design Method. Ultimate Lateral Soil Capacities (R) were obtained by the Log-spiral Method, increased by a 1.5 isolation factor and include foundation strength reduction factors (Sec. 1-2.2.3). Footing embedment lengths were designed by the Rutledge Equation where S1 = RD/3. S1 is the Allowable Ultimate Lateral Soil Capacity. See example in Appendix C of the Guide Specifications.

BACK

1.4.2.1 Soundwalls, General - (continued)

Conditions for which the standard drawings were NOT designed include:

- Poor Soil type foundation material. This condition requires a foundation investigation and special design.
- Exposure B2 or C. Also locations on bridges, retaining walls, or traffic barriers.
- Impact loads or live loads immediately adjacent to the soundwall.

1.4.2.2 Seismic Load

Refer to Guide Specifications Article 1-2.1.3.

EQD = (A)(f)(D).

(A)(0.75)(Dead Load) - - except on bridges and retaining walls
(A)(2.50)(Dead Load) - - on bridges and retaining walls
(A)(8.00)(Dead Load) - - connections for prefabricated soundwalls on bridges
(A)(5.55)(Dead Load) - - connections for prefabricated soundwalls on retaining walls

Note: The product of (A)(f) should not be taken as < 0.1 .

1.4.2.3 Factor of Safety Against Overturning - (Spread footings only)

See Guide Specifications Article 1.8.2

2.0 for Dead Load + Earth Pressure + Live Load Surcharge
1.5 for Dead Load + Wind Load + Earth Pressure
1.5 for Dead Load + Seismic Load + Earth Pressure

1.4.2.4 Pay limits for Soundwalls

Use square feet,

(Bottom of wall to top of wall) (wall length)

BACK

1.4.2 Soundwalls - (continued)

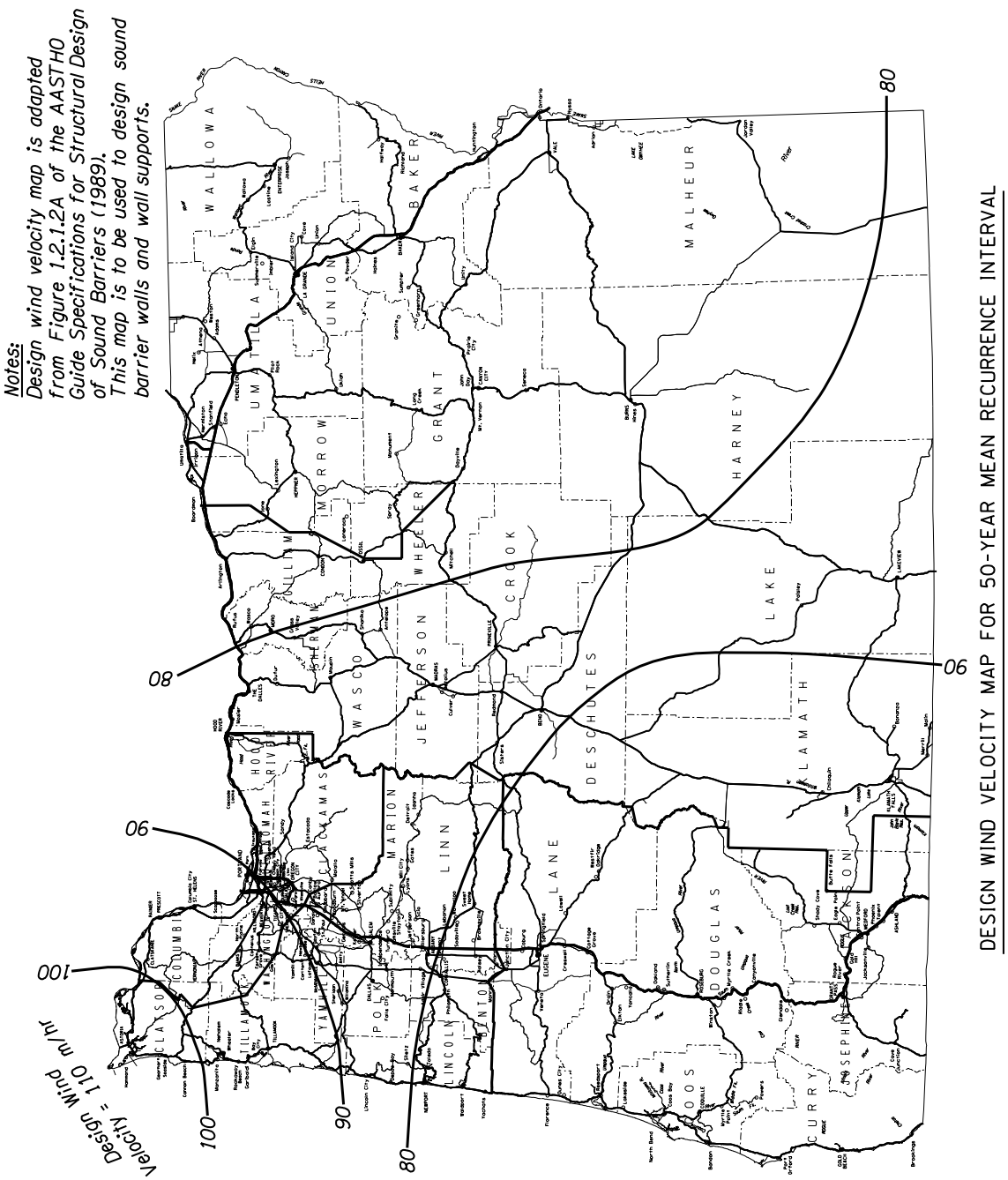

Figure 1.4.2A

1.4.3 Impact Attenuators or Crash Cushions

1.4.3.1 Attenuator Design

Attenuators are required in areas, such as gore points of diverging roadways and columns in medians, where hazardous objects cannot be removed from the possible paths of vehicles.

The need for attenuators can often be eliminated by omitting or removing hazardous objects from gore areas. Non-breakaway sign supports are examples of such objects. Bridge parapets in gore areas may be avoidable when they occur near the end of a bridge, where their need can be eliminated by bridging the space between diverging roadways.

Space in a gore area is valuable as a recovery or evasive maneuver area. Therefore, all space wasting features such as curbs and raised pavements, should always be removed. This will avoid interference with the proper functioning of the crash attenuator and it can be located as far from the gore nose as possible.

Bridge will provide designs and plans for attenuators located on structures. Roadway will provide designs and plans for other locations.

Design guidelines and approved systems brochures are available in each Bridge Design Team's room. All new project designs should utilize attenuators that have passed NCHRP 350 testing.

1.4.3.2 Chevrons

Reflective chevrons are detailed on attenuators to make them highly visible and give direction to traffic. Make sure they are correctly detailed, as shown below, on the plans. Refer to Section 00940 of the Standard Specifications and normally specify a Type "Y2" sign. Confirm the sign type with the Traffic Control Unit.

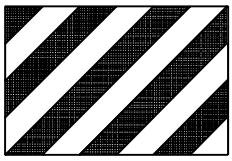

TRAFFIC
TO LEFT ONLY

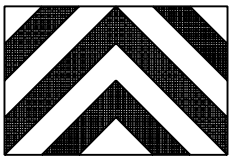

TRAFFIC
EITHER DIRECTION

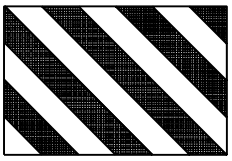

TRAFFIC
TO RIGHT ONLY

Figure 1.4.3.2A

BACK

1.4.4 Safety and Accessibility Requirements

1.4.4.1 Uniform Accessibility Standards

The Uniform Accessibility Standards are to be used for the design of all Federal-aid projects.

The design of all pedestrian overpasses and underpasses must include ramps which do not exceed a 1:12 grade and platforms every 30 feet. Other features such as handrails and stairs should also comply with the standards. A waiver to design requirements may be obtained on a case-by-case basis, if justified.

For pedestrian structures, use FHWA publication *Guidelines for Making Pedestrian Crossing Structures Accessible* (FHWA-I-84-6).

(1) Wingwall and MSE fill slopes – Provide fall protection for wingwall and/or MSE fill slopes whenever the potential vertical drop exceeds 10 feet. Fall protection may consist of one of the following:

- Roadway barrier at the top of the slope may be considered adequate protection for the public in most cases. However, when the vertical drop at the face of the wall exceeds 15 ft, provide additional protection (safety cable, cable fencing, or chain link fencing) at the top of the wall.

- Safety cable at the top of the wall may be adequate when the slope is not accessible by the public, but access by maintenance personnel and/or bridge inspectors is anticipated.

- Provide cable fencing when no roadway barrier has been provided at the top of the slope and the slope is accessible to the public. Where a sidewalk is provided at the top of the slope without roadway barrier between the sidewalk and slope, the slope should be considered accessible to the public.

- Provide chain-link fencing or hand railing when pedestrian, maintenance or inspection access is provided adjacent to the top of wall.

Seek concurrence from the Region Safety Manager concerning the specific wall slope protection proposed.

Provide fall protection that is aesthetically appropriate for the site. In many cases, this may involve extending the system along the full length of the wall even though portions of the wall may have less than 10 feet of vertical drop.

(2) Design Criteria for safety cable – Design safety cable and cable fencing using the following criteria:

- Use 1/2" diameter galvanized wire rope with an independent wire rope core and having a minimum breaking strength of 26,000 Lbs.

- Use galvanized cable connections and turnbuckles having a minimum ultimate strength at least as great as the cable strength.

BACK

1.4.4.1 Uniform Accessibility Standards – (continued)

(2) Design Criteria for safety cable - Design safety cable and cable fencing using the following criteria: - (continued)

- For cable fencing, provide a minimum of two cables with the top cable 36" high and the other cables evenly spaced.
- Space cable supports or posts at 10 feet or less.
- Design the cable support system to resist a vertical service load of 3000 Lbs (5000 Lbs ultimate) anywhere along the length of the cable.
- Design end posts and cable end connections to resist the minimum breaking strength of the cable. End posts for cable fencing need only be designed considering one cable loaded at a time

1.4.4.2 Inspection and Maintenance Accessibility

Such facilities should meet the *Oregon Occupational Safety and Health Code and Oregon Safety Code for places of Employment* (Chapter 2, primarily). A copy of the code is located in the Preservation Unit.

Inspection walks must clear all required minimum clearances under the structure and cannot infringe or reduce minimum required waterway openings.

Provide inspection walks with sufficient headroom and width for inspection personnel to carry bulky equipment between walk rails without difficulty.

Consider inspection walks for wide and high bridges where the reach of the arm of an inspection crane is not long enough for proper inspection and maintenance of the bridge members.

Consider inspection walks combined with other facilities such as ladders, manholes and safety cables. Consider all critical areas that require close inspection such as fracture critical members, hinges, splices, hangers, expansion joints, bearings, utility lines, navigation lights, and areas that require frequent maintenance.

FHWA has recommended maintenance walkways between all steel girders. This has proven to be a costly item and should be reviewed on a case-by-case basis. These were provided on the Santiam River Bridge (Steel Alternate) Bridge 08123D, Drawing 47448. The detailed W5x15 walkway beams are not readily available. A W8x18 alternate is recommended, as this was substituted on the John Day River Bridge, Bridge 00108D.

(1) MSE and High Vertical Abutments – Where abutments have items such as bearings or shear lugs that may require inspection and maintenance, provide access or a safety cable system. Where metal bearings are used, assume regular maintenance and/or inspection will be required. Rubber or fabric pad bearings generally require little or no maintenance, but still must be inspected. Where the vertical clearance between the top of the abutment wall and the bottom of the longitudinal girders is more than 5 feet, provide safety cable. Attach the cable either to the backwall (approximately 4 ft above the top of abutment wall) or to the bottom of the girders. Note that attachment to precast prestressed girders must be limited to the center 4" of the bottom flange. Design the safety cable system using the criteria given in Section 1.4.4.1(2).

BACK

1.4.4.3 Concrete Box Girder Access and Form Removal

Normally provide permanent access to all cells of concrete box girders for utility access, inspections or other purposes. All forms are to be removed from cells where access is provided.

Deck forms to be removed may be supported off the bottom slab if the bottom slab is fully supported, designed to support the added load and has no detrimental effect on the structure.

Deck forms for non-accessible cells may be left in place. Deck forms left in place are not to be supported off the bottom slab. Web supported deck forms are acceptable. An allowance for deck form dead load should be included in the design loads.

1.4.4.4 Standard Access and Ventilation in Concrete Box Girders

Standard Drawings BR135 and BR136 show standard access and ventilation detail. See also Section 1.1.15.6, "Access Holes". Use the following guidelines tempered with engineering judgment.

- Bottom Slab Access Holes - Single span bridges will normally require one access hole per cell. Multiple span bridges will normally have one access hole per cell at each end of the bridge. Access holes should be located in accordance with the guidelines shown on the standard drawings. The 8 feet minimum height to the access hole is recommended to discourage unauthorized access into the structure. Keep the inspector in mind when choosing the access locations. Do not place access holes over railroad tracks.

- Girder Stem Access Holes - Girder stem access holes are to be provided through the interior stems at the midpoint of all spans. These lateral access points will allow the inspector to complete their inspection of span or spans without having to exit and reenter the structure.

- Crossbeam Access Holes - These are not detailed on the standard drawing since their design will vary widely because of structural requirements. However, it should be noted that only one access hole will be required per crossbeam if the girder stem access holes are provided.

- Bottom Slab Ventilation Holes - These ventilation holes, similar to the bottom slab access holes in design except top opening, are intended to be used in all cells of each span not having access holes. Generally, the ventilation holes would be located near the opposite end of the span from an adjacent span having access holes. The holes provide additional ports for removing forms, serves as an exhaust hole when forced ventilation is required and provides additional natural ventilation.

- Stem Ventilation Holes - These holes provide for the escape of lighter-than-air gases and are located near the high point of each span as detailed on the standard drawings.

- Ladder Support - The ladder support provides a safe support for the ladder while the inspector unlocks the access hole cover. After the cover is unlocked, the inspector should reposition the ladder through the access hole so they can grab onto the ladder while entering or leaving the box girder cell.

- Access Cover Prop - The access cover prop is designed to facilitate the opening or closing of the cover when the ladder is supported by the Ladder Support. Once the ladder is through the access hole, the prop should be released so the cover will lie flat. The prop would be re-engaged upon exiting the box.

1.4.4.5 Protective Screening

Protective screening should be considered on new structures where adjacent traffic, traffic below or the public below are exposed to pedestrians on overhead structure sidewalks or pedestrian bridges. Protective screening should only be used where there is risk associated with something dropping or being thrown from the structure. It should also be considered on structure widenings, rail replacement projects, and railroad replacement projects. Guidelines are given in the AASHTO publication *A Guide for Protective Screening of Overpass Structures- dated Nov., 1990.* Normally the Regions will recommend or request if a project warrants protective screening. The designer will evaluate the site and will bring the question of protective screening to the project team.

Warrants for Protective fencing:
1). Highway carrying, grade separation or high level bridges with facility for pedestrian traffic.
2). Expressed concern due to recorded incidents of vandalism from a structure.
3). Existing or potential for pedestrian traffic nearby consistent with item number 1 above.
a.) Schools, churches, etc.
b.) Built up areas
c.) Shopping areas, malls
4). Compliance with formally published federal guidelines, if applicable.
5). Locations where existing railing or parapet conditions are substandard with regard to pedestrian safety.
6). Fencing to preclude unsafe acts or conditions; such as, snow passing through railing, pedestrian access.
7). Where any local regulations, laws or ordinances require protective screening.
8). On overpasses where property is subject to damage, such as buildings or power stations located beneath the structure.
9). Where the above conditions are not clearly present, the Designer shall judge the specific location and submit, if deemed warranted, a request to install fencing. The request shall be directed to the project team manager,

Current design criteria or physical attributes for protective fencing include:

- lightweight (less than 100 plf)
- translucent (see through)
- openings 3” square or less (normally a 2” chain link mesh is acceptable, with a 1” mesh for special cases)
- minimal projected area (less than 30 percent)
- difficult to climb (no handrail)
- able to carry pedestrian rail loading

BACK

1.4.4.5 Protective Screening – (continued)

- no opening between the bottom of the fence and top of curb, deck, sidewalk, or concrete bridge rail with the further provision that the bottom of fence be of sufficient stiffness to prevent large permanent deflections

- 8' high (from top of walk surface), except 10' high at Railroad Overcrossings

- fencing can be terminated 12' beyond the fog line and does not need to extend to the end of the structure

Sight Obstruction - Fencing may obscure the intersection sight distance at ramps, cross streets, or driveway accesses off the end of the structure, non-signalized intersections increase this potential hazard. Stopping the fence after it is no longer required may solve some of the problems, however, some cases will require specialized designs.

Curved Fencing - Ideally, curved fencing should be used when a sidewalk is present. The theory is that the curvature is an additional deterrent because it will force the thrower into the roadway in order to clear the fence.

Curved Structures - On curved structures, give consideration to potential sight distance problems that may occur due to the screening. On structures with tight curves, it may be necessary to use straight fencing rather than curved fencing because it is difficult to construct curved fencing on a tight curve and obtain proper fit of the chain link fabric.

Under Structure Screening - In the Portland area, Region is concerned about homeless people sleeping under bridge end bents. In some cases chain link fencing may not be adequate, because it is easily cut. Consult Region and local districts for end bent treatment.

BACK

1.4.4.5 Protective Screening - (continued)

Screening on new structures when needed, will be as follows and as shown on Figure 1.4.4.5A and Standard Drawings BR240 and BR241.

- Bridges with Sidewalks - See Details "A", "B", "C", "D" on Figure 1.4.4.5A.
    - If a barrier is placed between the sidewalk and roadway, screening should be used in place of a pedestrian rail along the outer edge of the structure.
    - If the sidewalk is not separated, screening should be placed behind or attached to the combination rail along the outer edge of the structure.
- Pedestrian Bridges - See Detail "E" on Figure 1.4.4.5A. Pedestrian bridges will be screened in most instances.
- Certain sweepers will not fit through curved fence enclosures. Region One sweepers measured 10'-5". Standard Drawing BR240, Type "A" Fence Section has provisions to allow access. Contact Region to determine an acceptable type of fence.
- Railroad Undercrossings - See Details "B", "C", and "D" on Figure 1.4.4.5A.
    - Splash boards may also be required where switching is performed or where there are other frequent activities. Typical details are shown on Figure 1.4.4.5B.
    - Exceptions challenging the need for screening of railroad undercrossings may be appropriate under some or all of the following circumstances:
        - Location is remote, away from urban areas.
        - Structure carries highway or freeway traffic with no sidewalks or pedestrian facilities.
        - Bicycle and pedestrian traffic is minimal.
        - Features of the structure will provide adequate safety against potential objects falling from the structure (straight horizontal alignment, shoulder width, rail type such as concrete provides a closed system, etc.)

    If an exception is justified, send a memo to the Railroad and Utilities Engineer with reasons for the request stated.

BACK

1.4.4.5 Protective Screening - (continued)

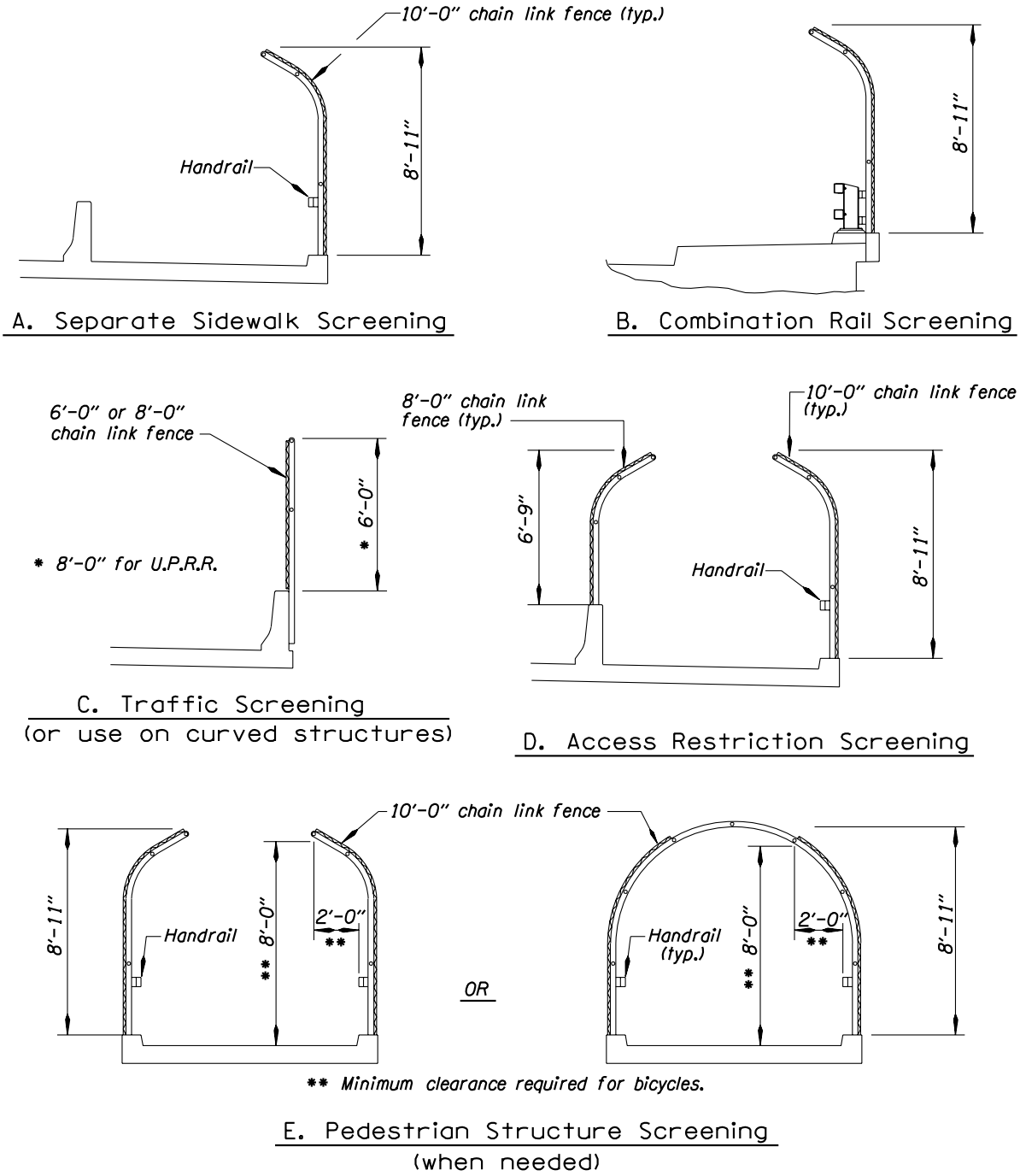

Figure 1.4.4.5A

1.4.4.5 Protective Screening - (continued)

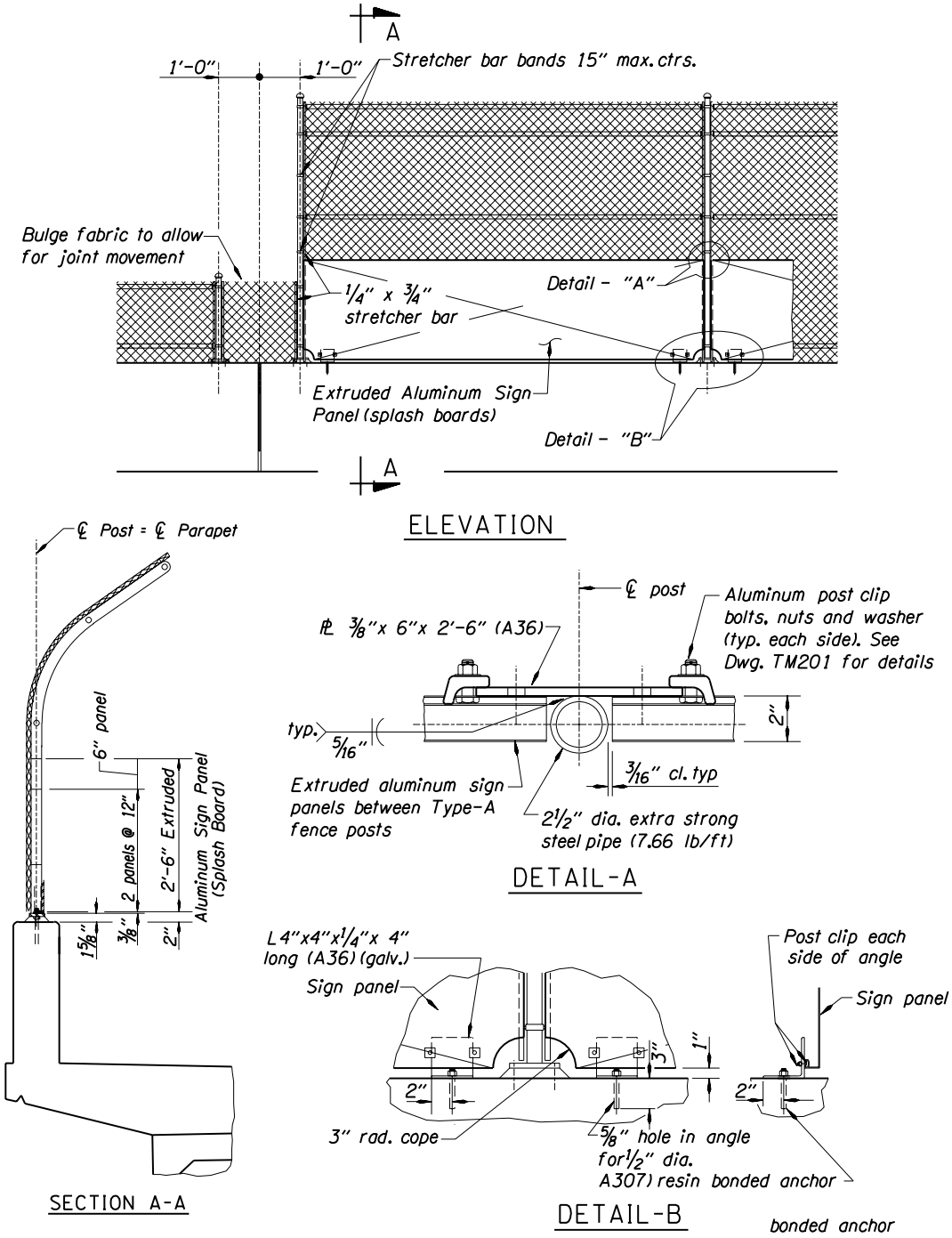

Figure 1.4.4.5B

1.4.4.5 Protective Screening - (continued)

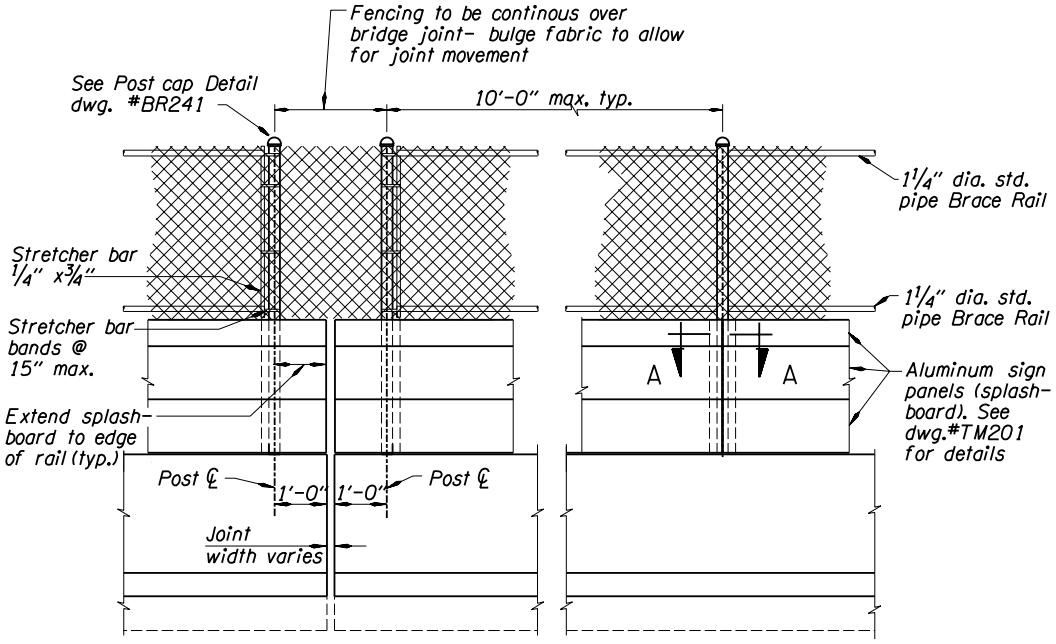

ELEVATION TYPE 'C' FENCE at DECK JOINTS

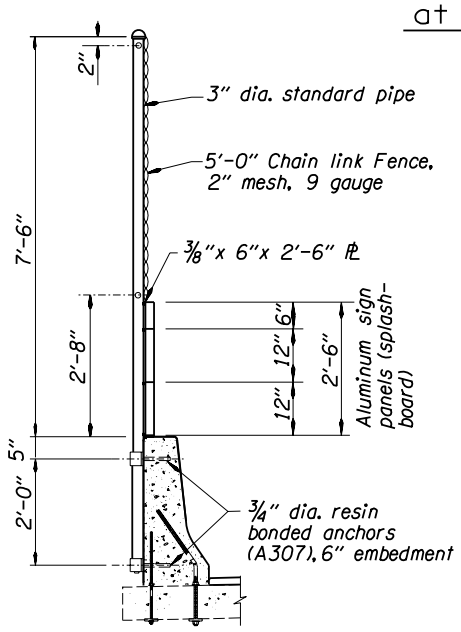

TYPE 'C' FENCE SECTION

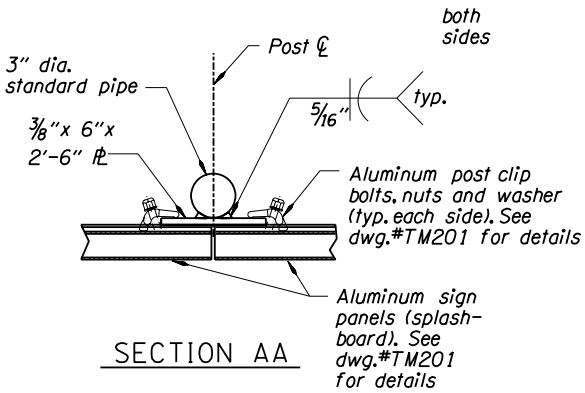

SECTION AA

Figure 1.4.4.5C

BACK

1.4.5 Culvert Design

1.4.5.1 Culvert Design, General

Concrete culverts, metal pipe culverts and pipe arches are to be designed by the Geo-Environmental Section.

1.4.6 Bridge Name Plates

1.4.6.1 Existing Name Plates

All existing name plates should be salvaged and given to the Equipment and Services Unit Manager, who will put it in the Highway Museum. The Project Manager should be alerted and asked to salvage the name plates or direct the contractor to do it.

1.4.7 Utilities On Structures

1.4.7.1 Utilities on Structures, General

1.4.7.1.1 Roles and Responsibilities

(1) District Roles and Responsibilities - The Districts are the main point of contact for the location of all utilities and will issue all utility permits. Utility companies will only be given a permit for the specific area they actually need for that installation. Space for future lines will need to be included on a separate permit application. If the utility installation requires holes to be drilled into the bridge, if the utility will add a significant amount of additional dead load on the structure, or if the installation has the potential to be in conflict with any of the General Requirements in 1.4.7.1.2, the District will refer the permit application to the Region Tech Center Bridge Unit Manager and the Bridge Engineer for their input and approval. Otherwise, the District Manager will simply approve, monitor the installation of the utility, and assure that all utility installations are labeled in accordance with accepted practices (see below).

(2) Region Tech Center Roles and Responsibilities - (Note: If the utility is associated with an OTIA Project, the Bridge Delivery Unit could perform these same roles).

If the District forwards a copy of a utility permit request to the Region Tech Center for review prior to the issuance of the permit, the Regional Tech Center Bridge Unit Manager will assure that the utility installation is in compliance with the General Requirements in 1.4.7.1.2.

BACK

1.4.7.1.1 Roles and Responsibilities – (continued)

(3) Bridge Engineering Section Roles and Responsibilities - For certain installations, the District and/or Region Tech Center will refer the Utility Permit Request to the Bridge Engineer for input. Bridge Engineering Section will refer input back to the Region Tech Center Bridge Unit Manager for final approval. The Bridge Engineering Section will provide input if the utility installation will have a direct impact on any of the following:

- The installation calls for the installation of a High-Voltage Line on a structure.
- The utility contains a high-pressure line and / or volatile gases.
- Installation has the potential to create a corrosive environment due to dissimilar materials.
- The installation is on a bridge that has a cathodic protection system in place.
- The utility is going to be installed on a drawbridge.
- The installation is in a confined space where its location or operation creates an unsafe environment for bridge inspection and/or bridge maintenance personnel.
- The installation has the potential for adding a significant amount of dead load to the structure.

1.4.7.1.2 General Requirements

All wire line type crossings shall be installed in conduit.

High-voltage lines (greater than 25000 volts) should not be installed on a bridge.

If possible use existing utility provisions located on the structure.

Utility installations should be designed so that a failure will not result in damage to the structure or be a hazard to traffic or endanger the public.

If possible, locate the utility installation to minimize the effect on the appearance of the structure and minimize installation, inspection, and maintenance access problems. In most cases, this will mean installing the utility between girders or in the sidewalk or rail. Locate the utility as close as possible to the exterior of the structure to allow access by snooper crane if no other access is provided. This may not be possible if staging of the structure is not compatible. See Section 1.4.4 for accessibility requirements.

Provide sufficient space around utilities for maintenance activities such as cleaning and repainting steel members.

Utilities and supports should not normally extend below the bottom of the superstructure.

If the utility is placed on the outside of the rail or exterior girder on stream crossings, place it on the downstream side of the structure to minimize the chance of damage from floating debris.

Utilities are to be labeled according to American Public Works Association (APWA) standards with color code and owner, contact information, etc.:

Electrical – Red
Gas – Yellow
Communication – Orange
Potable Water – Blue
Irrigation – Purple
Sewer - Green

BACK

1.4.7.2 Providing for Utility Installations

When permitted by the structure design, provide for utilities as follows:

- Agency Communication Infrastructure – on new National Highway System structures, provide a minimum of two – 2 inch I.D. conduits for Highway communications use. Follow the detailing guidelines for utility installation in Section 1.4.7.3 .
- For structures carrying a freeway over a river, provide for utilities that have been approved by the FHWA. Provision for future utilities should be on a judgment basis.
- For structures carrying highways over freeways and other classes of highways, provide for utilities that have requested space. Provision for future utilities should be on a judgment basis.

Also see Section 1.4.7.6 for acceptable accommodation of utilities in structures.

The proximity to heavily populated areas and the probability of future requests for utilities should be the basis for deciding to provide for future utilities.

- For structures inside city limits, provide for future needs with two 12" diameter holes on each side of the structure in addition to the specific utility requirements.

Provide access for utilities as follows:

- No utilities should be accommodated on structures unless access can be provided for inspection and maintenance by the utility, with the exception of telephone and electrical conduits continuously encased in concrete.

- For structures carrying highways over freeways, access from the freeways should not be provided. In special cases, access may be provided from freeway right-of-way, but not from the traveled roadway or shoulders.

BACK

1.4.7.3 Design and Detailing Guidelines

Utility attachments may exert large forces at the point of connection. Individual members and the entire structure should be designed for all loads imposed by the utility. Consideration should be given to loads or movements that might be imposed on the utility by the structure, such as from temperature movements.

Make sure all loads are considered in the design, including dead, temperature, vibration, inertia loads, etc. Longitudinal and transverse supports or anchorages may be needed. Hydraulics or Facilities Design may need to be contacted to determine appropriate loads for design or review.

If attachment connections or brackets are designed by the utility company, the submittal should be accompanied by calculations for the designer to review. For pressure systems, maximum design and operating pressures should be stated. See Special Provisions 00589 – "Utility Attachments to Structures" for additional requirements.

If the proposed utility weighs more than 100 pounds per linear foot, the utility company will be required to provide a load rating of the structure, with the utility loading superimposed onto the structure, so that it can be determined whether the structure has sufficient loading carrying capacity for the installation of the utility. If available, ODOT will provide a set of bridge plans for their use. All plans must be field verified, because not all as-constructed bridge plans are correct. If a proposed utility installation requires a structural evaluation, the utility plans / calculations must be stamped by an Engineer that is registered in the State of Oregon.

Design the installation so that a failure does not damage the structure or endanger the public. This includes designing for earthquake movement (some utilities are sensitive to movement, i.e., gas, water, sewer, fiber optic cables).

Submittal should include calculations for:

- Vertical, lateral, and longitudinal loading, as appropriate.
- Maximum and operating pressures for pressurized systems.
- Waterline thrust blocks
- Loadings to be carried by the structure and their location

Attachment designs that use a single anchor at each attachment point must be designed to remain serviceable if one of the other attachments were to fail.

In general, place holes in transverse members near the inside face of the outside longitudinal beams.

The alignment of utility holes should be kept as straight as possible, both vertically and horizontally, to avoid difficulties in placing utility pipes.

Construction tolerances and variables need to be considered in the design of brackets and hangers. Slotted holes, adjustable rod lengths, etc. should be incorporated into the attachment design.

Where utility holes are provided in the ends of the structures for future utilities and an approach slab is required, provide each hole with concrete culvert pipe, galvanized smooth steel pipe (1/4" min. thickness), or Sch.40 PVC pipe of the same inside diameter as the utility hole, extending from the hole to a point 5' minimum beyond the end of the approach panel. Normally, such pipes should be extended parallel to the centerline of the structure. An oversized hole (1" larger diameter than the pipe) should be formed into the backwall or end beam. When the pipe is installed, the void around the pipe should be filled with a compressible type of material.

BACK

1.4.7.3 Design and Detailing Guidelines - (continued)

Utility holes and pipes under end panels may need to be a larger diameter to accommodate joint splices, couplers, or bells at connections.

In the absence of specific instructions from the utility company, provide hot-dip galvanized expanded coil concrete inserts with closed-back ferrule, threaded for 3/4" diameter bolts installed in the deck at 10' maximum centers above each line of utility holes(minimum insert length 5-1/2", minimum safe working load in tension 6000 lbs). Install short galvanized bolts in the inserts to prevent rusting of the threads, if the inserts are not to be used immediately.

Encased conduit is to be PVC or approved equal pipe. External conduit should be hot-dip galvanized steel.

Provide suitable expansion joints at structure expansion joints.

Hot-dip galvanize all steel utility supports including fastenings and anchorages.

Steel Structures - Utility lines should be suspended from the deck, not hung from cross frames, diaphragms, or main beams.

Prestressed Slab or Box Structures - Provide for future utilities through the end wall closure pours with capped 8" diameter blockouts or by embedding a 6" diameter PVC pipe in the wall and extending it 8' to 10' beyond the structure bent. See Figure A1.1.8.7A.

1.4.7.3.1 Potential Maintenance Problems

Don't hang utilities against side of decks that have no curb. If necessary to put them on the side, move them out from deck so they do not trap debris.

Avoid exterior mounted utilities in heavily sanded areas.

Some bridges have drains through the concrete railing, do not attach utilities below these drains

Avoid attaching them to timber elements. Many timber elements require replacement during the bridge's life.

Avoid going through shallow end bents with no impact panel and a history of approach settlement. Excavation may increase settlement, settlement may cause utility to shear, or utility may get in the way of installing sheet pile or impact panel in the future.

The utility will agree that they will promptly respond to and provide a process to repair failing utilities and removing abandoned utilities.

1.4.7.4 Special Utility Considerations

(1) Gas Lines - Gas lines or other lines carrying volatile materials are to be Schedule 40 steel pipe or approved equal, and cased full length of enclosed or box type structures. Automatic shut-off valves shall be installed at or near each end of the bridge.

Casings must be vented to outside of the structure at each end and at high points.

Exposed lines should be protected from damage, both accidental and intentional. This could include barrier and/or fencing with locked access.

BACK

Transverse supports must be provided for all gas lines.

1.4.7.4 Special Utility Considerations – (continued)

Proposals must be submitted for approval with details of the pipe, casing, vents and attachments to the structure. Calculations must also be submitted to show that the proposed piping and casing system will be adequate for the intended purpose.

Gas line corrosion protection systems should be reviewed by the Facilities Design Team.

(2) Water Lines and Sewer Lines - Water or sewer lines placed adjacent to bridge footings should be cased if failure of the line could cause undermining of the footing or environmental hazard.

Water lines are to be hot-dip galvanized steel, ductile iron pipe, or approved equal. Corrosion protection systems may include cathodic protection.

Transverse supports must be provided near each coupling for all water lines.

In box girders, make provisions for a water line failure. Provide additional drain holes or grating at low points in the cells. Low pressure sensing shut-off valves will be required, in addition to the line being fully encased.

Water line thrust blocks may be required.

(3) Traffic Barrier - The number and size of conduits should be limited to assure ease of placement and proper consolidation of the concrete in the rail. Special attention should be given to details at expansion joint couplings because these tend to be much larger in diameter than the conduit.

1.4.7.5 Attachments to Existing Structures

Requests for attachments to existing structures normally come to the Region's District Manager. The District Manager submits the proposal to Bridge Section Operations Unit for review, comments, and recommendations. The Regions will make the final decision on any proposal. See Special Provisions 00589 – "Utility Attachments on Structures" for additional requirements.

Attachments to existing structures should be reviewed with the same concerns and considerations of new structures. Some additional concerns include:

- Conduits or brackets should preferably be attached to concrete structures with resin bonded concrete anchors.
- Mechanical anchors may be considered on a project-by-project basis if the following considerations are satisfied:
  - Anchors are of a type that will maintain capacity under dynamic or vibratory type loads.
  - Provide at least two anchors (4:1 safety factor per anchor) per attachment for redundancy, or design attachments with a single anchor to provide a factor of safety of 6:1.
  - Drilling through reinforcing steel should be avoided. If critical steel is hit, the anchor location must be moved and the hole must be patched with an approved patching material. The level of concern about cutting reinforcement depends on the location of the section, amount of reinforcement at the section, and the type of reinforcement (moment, shear, temperature, etc.).

BACK

- All exposed pipe and hardware must be protected against corrosion.

1.4.7.5 Attachments to Existing Structures – (continued)

- All exposed pipe and hardware must be protected against corrosion.
- The utility request must include utility hanger details.
- Drill holes with low-impact rotary drill.
- Patch any abandoned holes.

1.4.7.6 Utility Costs and Agreements

On new construction, the State normally provides the concrete inserts in the deck for hangers, holes through diaphragms, crossbeams and endwalls, and pipes under the end panels. This is regarded as providing minimal accommodation which essentially has zero or negligible cost ("de minimus", or below the threshold of actually costing the program) compared to not providing these items, and is acceptable per a January 2005 opinion from the Oregon Department of Justice. All other costs for materials and labor related to the utility installation are the responsibility of the utility company.

If a utility company requests the addition of conduits in a sidewalk or concrete rail, special attachment brackets, inspection walkways, etc., it is normally at the expense of the utility company.

In such a case, an agreement is needed between the State and the utility company before the work can be included in the project. The Utility & Railroad Coordinator in the Right of Way Section, Project Administration Unit writes the agreement. Notify the Utility & Railroad Coordinator as soon as possible in the project development process (preferably at the TS&L stage or before), to ensure an agreement can be reached and the work can be included in the project.

1.4.8 Structure Clearances

1.4.8.1 Roadway Clearances

Clearances normally required for highway overcrossings are as shown in Figures 1.4.8.1A, A-1, B and C.

(1) Roadway Widths

Refer to the Highway Design Manual, increase shoulder widths by 2' where roadside barriers are used. This applies to all classes of roads regardless of the ADT and type of traffic. **The major exception to this is the one-way single-lane ramp (26' roadway).** Be alert to checking the roadway width on all projects with the roadway designer when first beginning the preliminary design. In most cases, the bridge roadway width will be 4' wider than the approach roadway width. The 2' shy distance is normally not required adjacent to a raised sidewalk that has a traffic rail at the back of the sidewalk.

Normal Bridge Roadway Width = (Lanes + Shoulders + 4')

For local agency projects, the roadway width should be verified using AASHTO Publication, "A Policy of Geometric Design of Highways and Streets".

BACK

1.4.8.1 Roadway Clearances – (continued)

(2) Sidewalk and Bikeway Widths

The width of sidewalks on state projects, if required, should be 5' in rural areas and 6' to 8' in urban areas. Local agencies may have their own requirements.

Designated separate bikeways on structures will be a minimum of 8' in width.

Sidewalk ramps are required at all intersections and other crosswalks for disabled persons. Use the details on "Sidewalk Ramps", Drawing RD725.

(3) Vertical Clearance

Vertical clearance policy is established by the Roadway Engineering Section and is listed in Section 5.7 of the Highway Design Manual. The current policy for new construction requires 17' - 6" minimum vertical clearance on interstate routes and 17' - 0" on all other routes. Some non-interstate freight routes may also require 17'-6" clearance. Verify the required clearance with the Motor Carrier Transportation Division (MCTD) whenever clearances less than 17'-6" are proposed. A 16' minimum vertical clearance is required for all 3R preservation work, although the existing vertical clearance must be maintained.

There is a large volume of overheight vehicles (such as manufactured homes) that need 16'-6" vertical clearance. Changing the vertical clearance on a route from greater than 16'-6" to less than 16'-6" may have a significant impact on the industries dependant on transporting products along these routes. Therefore, no reduction of vertical clearances will be allowed without written approval from the Motor Carrier Transportation Division (MCTD).

Vertical Clearance Design Policy

New Construction

- All new structures on interstate routes must be designed with a minimum 17'-6" vertical clearance.
- All new structures on non-interstate routes must be designed with a minimum of 17'-0" of vertical clearance. Notify the MCTD when the clearance will be less than 17'-6".

3R Preservation

- Provide a minimum of 16'-0", but not less than the existing clearance (up to 17'-0"). Notify the MCTD when the clearance will be less than 17'-0".

During Construction

For locations with an existing clearance less than 17'-0", no reduction in clearance will be allowed during construction. For locations with an existing clearance 17'-0" or greater, provide 17'-0" minimum clearance.

Legal Load Height

The maximum height for legal loads is 14'.

(4) Height of Curbs and Sidewalks

Use 7" height when the rail used at the back of the sidewalk is structurally adequate and has

BACK

been crash tested. Use 9” height for all other cases.

1.4.8.1 Roadway Clearances - (continued)

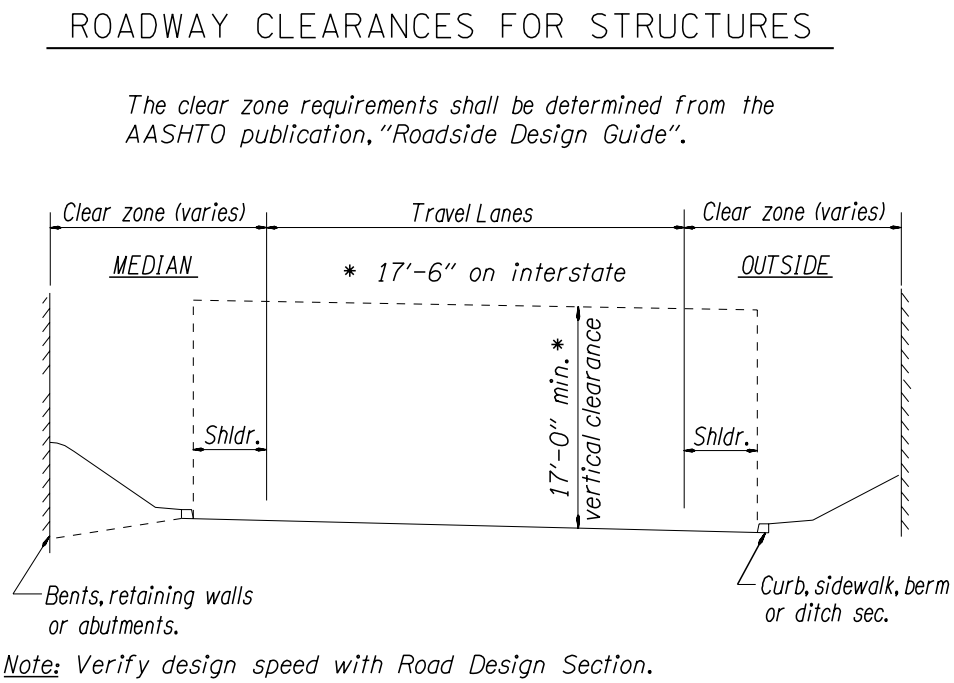

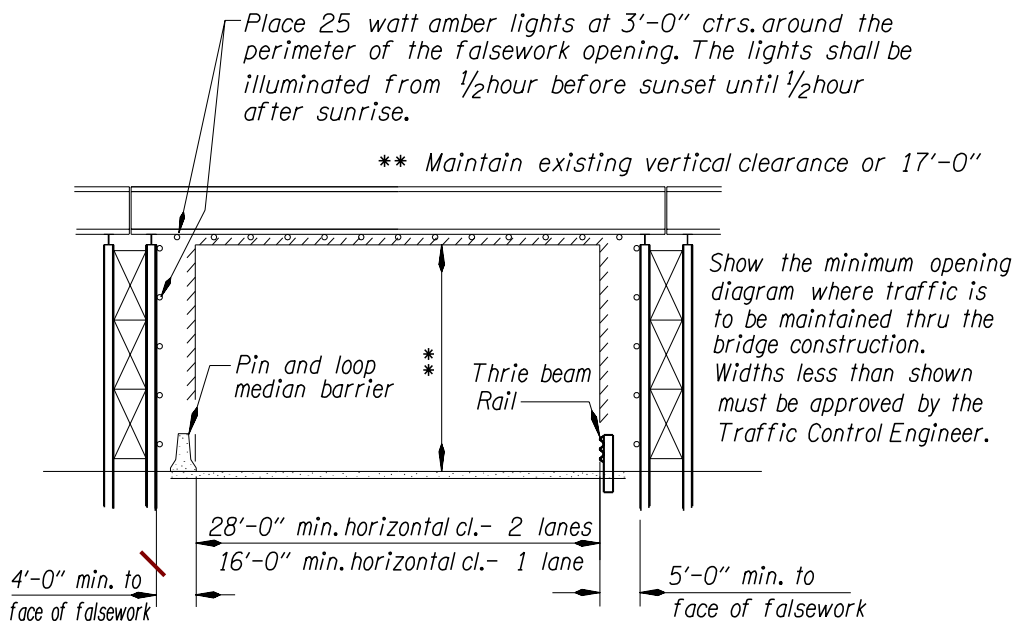

Note: Use 18'-0" min. horizontal clearance for 1 lane (19'-0" for interstate).

Figure 1.4.8.1A

BACK

1.4.8.1 Roadway Clearances - (continued)

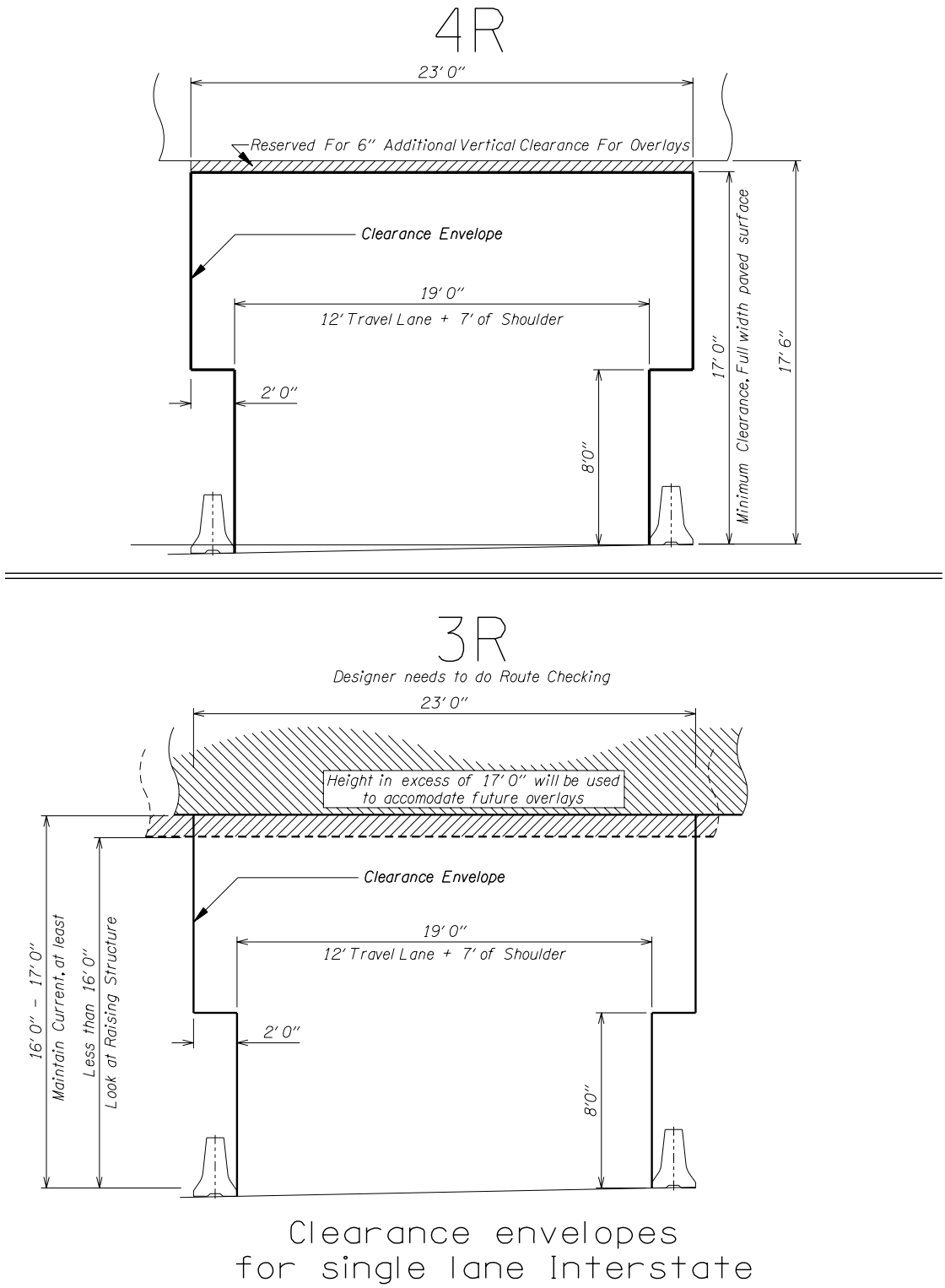

Figure 1.4.8.1A-1

1.4.8.1 Roadway Clearances - (continued)

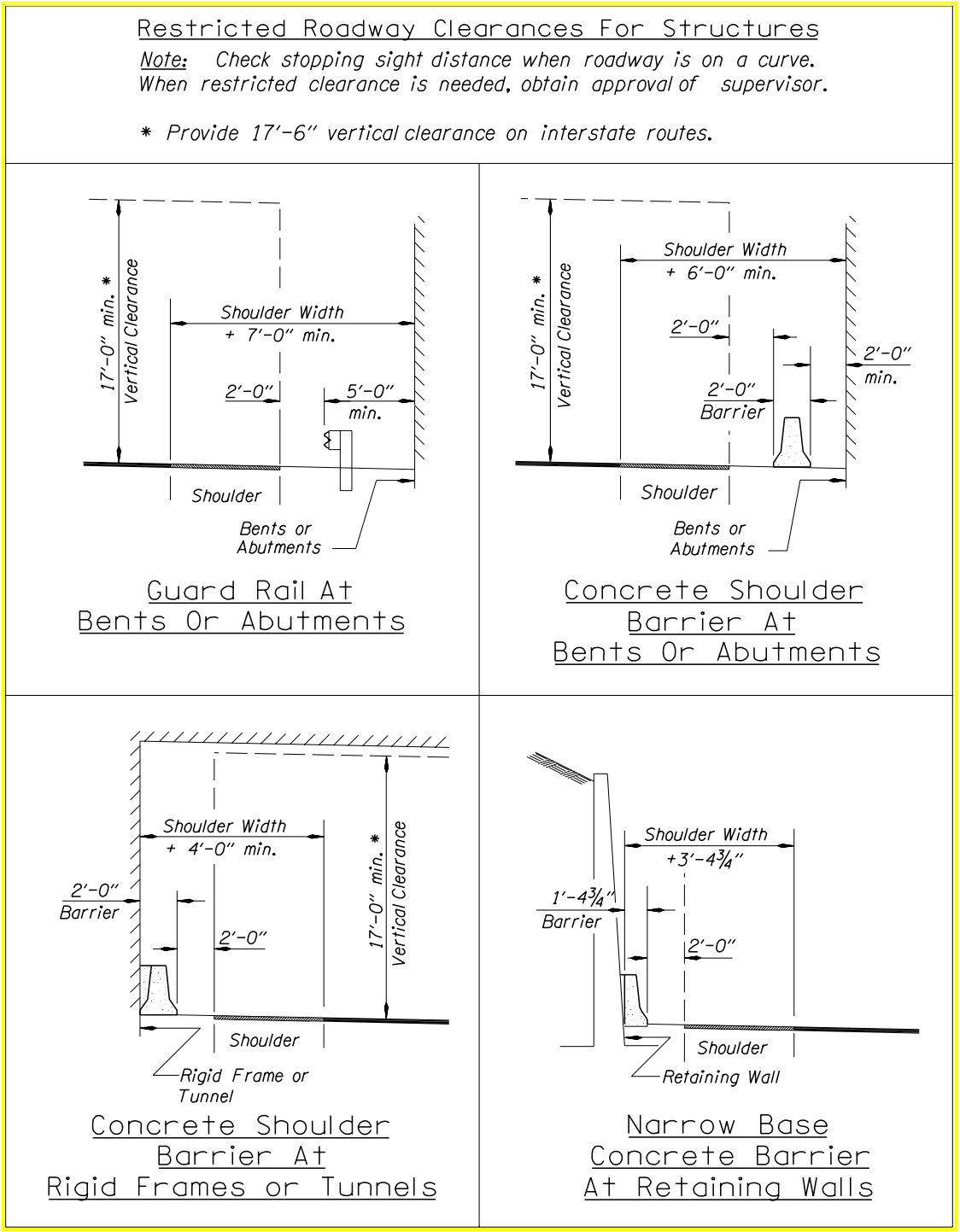

Figure 1.4.8.1B

BACK

1.4.8.1 Roadway Clearances - (continued)

RESTRICTED ROADWAY CLEARANCES FOR EXISTING STRUCTURES

Conrete barrier used to protect existing bridge columns with restricted clearances shall conform to the following criteria:

CASE 1 - *Design shoulder width is not encroached on by placement of concrete barrier.*

Place concrete barrier as detailed below:

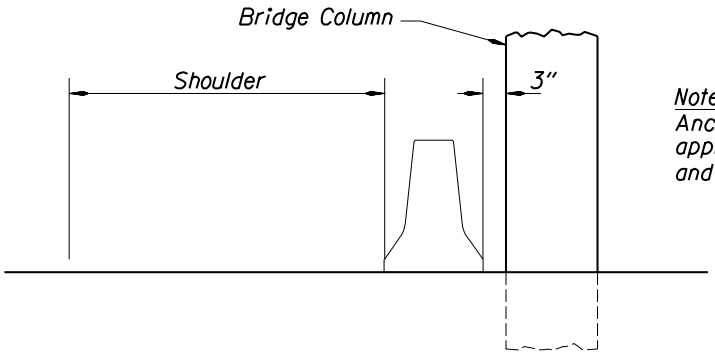

Note:
Anchor first two barrier sections approaching bridge columns and barrier thoughout columns.

CASE 2 - *Design shoulder width is encroached on by placement of concrete barrier.*

Develop the best solution to protect the bridge column (s). Possible solutions include accepting a narrower shoulder width or using a flat back or a modified barrier design.

Figure 1.4.8.1C

BACK

1.4.8.2 Railroad Clearances

Project specific design clearances, construction clearances, and shoring clearances should be shown on the contract plans

Design Clearances

Clearances required for permanent construction over railroads are shown in the design guides provided by the railroads or on the railroad's website. See Section 2.7.3.8 and Figure 2.7.3.8A of this manual.

Construction Clearances

Construction clearances required for construction over railroads are shown in the design guides provided by the railroads or on the railroad's website.

A construction clearance diagram similar to Figure 1.4.8.2A should be shown on the plans.

Note - All horizontal clearances shown are for tangent track. On curved track, increase the lateral clearances per AREA Specifications. For special cases, such as in yards, lesser clearances may be agreed to by the Railroad.

Shoring Clearances

Shoring clearances required for construction adjacent to railroads are shown in the design guides provided by the railroads or on the railroads website.

A shoring diagram showing the proposed excavation relative to the tracks and all other pertinent information as detailed in the design guides.

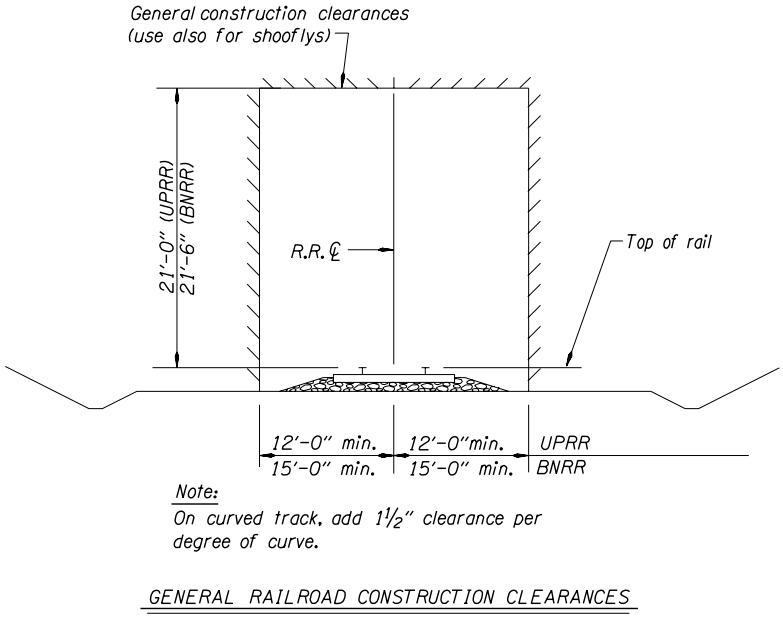

Figure 1.4.8.2A

BACK

1.4.9 Bridge Temporary Works

1.4.9.1 Introduction

Temporary Works are considered any temporary construction used to construct highway related structures but are not incorporated into the final structure. Temporary works required for construction of permanent structures include: temporary detour bridge, work bridge, falsework, formwork, shoring, cofferdams and temporary retaining structures.

Temporary Works shall be designed according to the AASHTO *Guide Design Specifications for Bridge Temporary Works* unless specified otherwise herein. Temporary Works shall be constructed according to the AASHTO *Construction Handbook for Bridge Temporary Works.*
Where failure of a temporary structure would have an impact on environmental protection, traffic, or public safety shall be designed and constructed using the criteria below.

General requirements

Roadway and Railroad Crossings - For roadway and railroad crossings, provide the vertical and horizontal clearances as shown and the following:

Bents Adjacent to Highways - Bents adjacent to highway traffic openings shall have:

- Temporarily pinned, pin and loop concrete barriers to protect the structure from damage by the adjacent traffic. Provide at least 1 foot clearance between the barrier and the bent.
- Posts designed for 150% of the calculated vertical loading
- Provide mechanical connections for posts to the supporting footing with capacity to resist a minimum lateral force of 2,000 pounds applied in any direction at the base of the post.
- Provide mechanical connections between top of posts and the cap or stringer capable of resisting a minimum lateral force of 2,000 pounds from any direction.
- Tie down all beams or stringers spanning traffic so that each will resist a 500 pound force from any direction.
- 5/8 inch diameter minimum bolts at timber bracing connections.

Bents Adjacent to Railroads - Bents adjacent to railroad traffic openings shall, in addition to the requirements of (d-1) above, provide the following:

- Collision posts as shown
- Bents within 20 feet of the centerline of track sheathed solid between 3 feet and 16 feet above top of rail with 5/8 inch thick minimum plywood and properly blocked at the edges
- Bracing on bents within 20 feet of the centerline of the track shall be adequate to resist the required horizontal design loading or minimum a 5,000 pounds horizontal loading

Width - Design temporary bridges to match the temporary roadway width and vertical and horizontal alignment as shown.

BACK

1.4.9.2 Temporary Detour Bridges

Temporary detour bridges are those bridges that have a maximum service life of five years to carry traffic while an existing structure is replaced.

Temporary detour bridges shall conform to the same requirements as that of a permanent structure, except as specified in this section. D*etour structures do not need to be designed for seismic requirements except for the minimum seat width provision of Article 4.7.4.4. of the AASHTO LRFD*. Detour bridges can be designed using latest edition Standard Specification for Highway Bridges or latest edition AASHTO LRFD Bridge Design Specifications. If the Standard Specifications for Highway Bridges are used, bridge rail live loads must meet LRFD criteria.

Design all structures on public roads, temporary or permanent, to carry all anticipated loads, and forces. Temporary structures must also resist lateral loads caused by hydraulics, debris, ice, wind and other applied forces when they exist. Design temporary detour bridges over waterways assuming scour depths and design flood in accordance with the Oregon Department of Transportation Hydraulic Manual.

Mechanically connect members of the temporary detour bridge together. The minimum capacity of the mechanical connections shall resist a load in any direction, including uplift on the stringer, of not less than 500 pounds. All associated connections shall be installed before traffic is allowed to pass beneath the span. All members at a connection need to resist the developed connection force. Substructure shall resist all applied combined axial and lateral loads and the minimum connection design force.

Contractor designed temporary detour bridge will follow all required design steps as the design of permanent bridges. Provide necessary data to the contractor in the Special Provisions (SP 250) to accelerate design such as:

- Foundation report
- Hydraulic report
- Environmental study and limitations
- In water work window

Furnish information on the plans not limited to following:

- Minimum structure width and number of traffic lanes
- Permit load (for permit load route)
- Minimum vertical and horizontal clearances when over crossing existing highway
- All project specific requirements (utilities, sidewalk….)

BACK

1.4.9.3 Agency Provided Temporary Detour Bridge

Oregon Department of Transportation has one lane and two lanes temporary detour bridges ready to erect at different locations. Provide a drawing showing the bridge footprint and foundation drawings. Contact Jeff Swanstrom at (503) 986-3337 for availability, scheduling and technical information of these bridges. Use Special Provision (SP 251) for using these temporary detour bridges.

1.4.9.4 Falsework

General

Minimum jacking force for lifting an existing superstructure for bearing replacement or bridge raising shall be 1.50 times superstructure loads at jacking time. The vertical load used for the design of falsework posts and foundation shall be at least 150% of the distributed load to that post. When the post is supported on an existing structure footing limit the stress on the concrete footing from all combined loads to 80% of permissible concrete stress. Additionally limit the foundation loads to the allowable foundation bearing capacity.

For falsework spans over roadways and railroads, all falsework stringers shall be mechanically connected to the falsework cap or framing. The mechanical connections shall be capable of resisting a load in any direction, including uplift on the stringer, of not less than 500 pounds. All associated connections shall be installed before traffic is allowed to pass beneath the span.

Provide, as a minimum, the following design calculations and detailing of falsework drawings, for a falsework supported by existing columns of a structure for widening projects or maintenance work:

- Complete connection details
- Location of resin bonded anchors with a note to locate the existing reinforcing prior to drilling holes
- When resin bonded anchor rods or thru holes for bolted connections were used to support endplates or bracket connections; have the contractor field verify the location of holes prior to connection fabrication
- Connection designed for 150% of the applied loads
- Connection designed for wind load
- Stress on existing column and supporting foundation shall not excess 80% allowable of each member
- Limit the foundation loads to the allowable foundation bearing capacity

Bridge Deck Falsework

The deck form for interior girders is usually set on the joists hung on from top flanges or supported by post from bottom flanges. It is not recommended by Oregon Department of Transportation to use embedded hangers welded to top flange or shear studs projecting from top flanges.

The Construction Handbook for Bridge Temporary Works has two examples for cantilever deck forming for steel girders. The contractor may provide double overhang brackets to minimize lock in stresses in exterior girders. Figure 1.4.9.4 is provided to illustrate typical deck forming details using opposed overhang brackets attached to a steel girder.

BACK

1.4.9.4 Falsework – (continued)

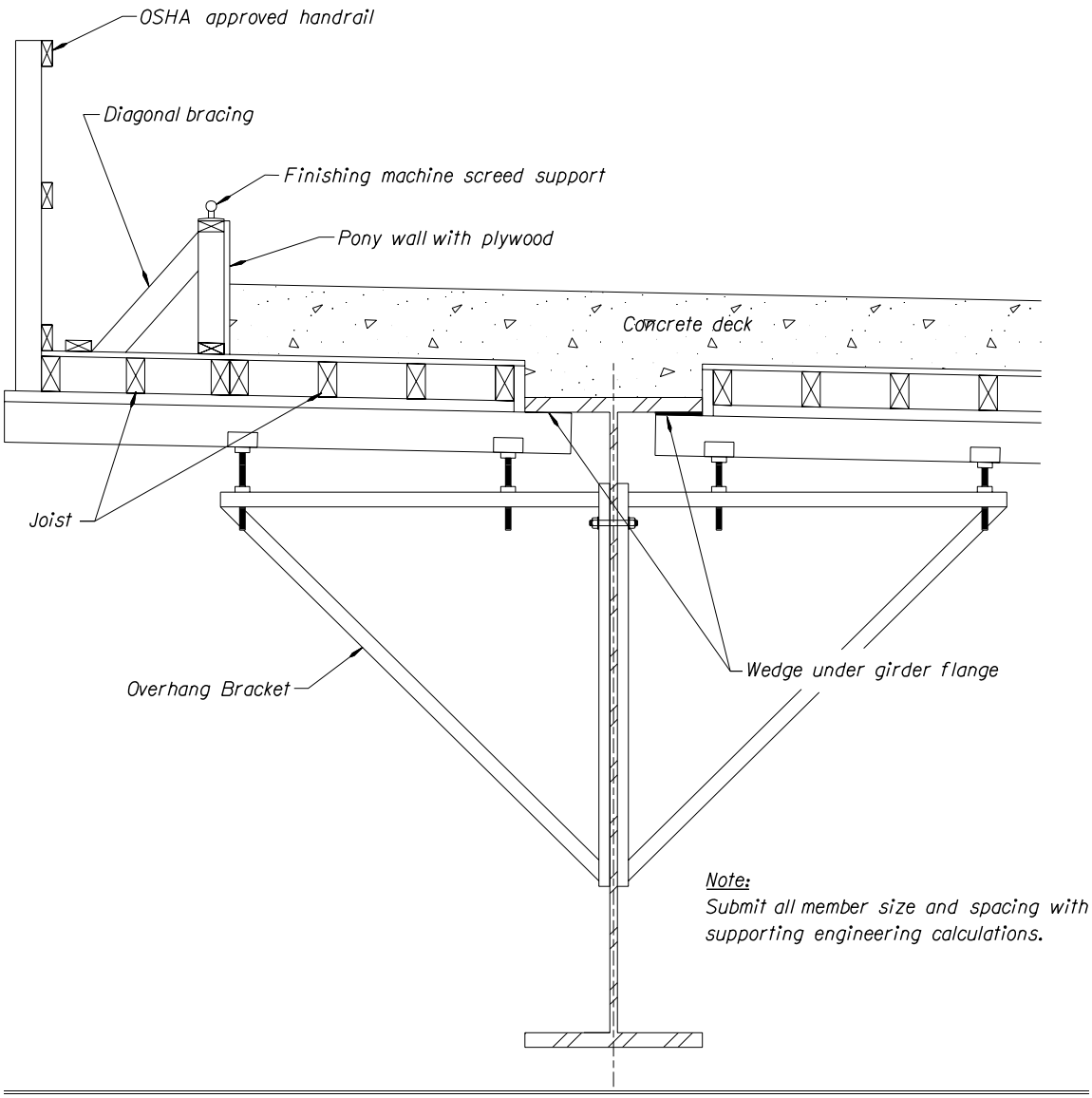

Figure 1.4.9.4

Piling

Design piling in accordance with AASHTO Standard Design Specifications For Highway Bridges.

When using piling to support the falsework, the falsework plans shall specify the minimum required bearing capacity and the required depth of penetration for the piling. The field method for determining the required pile bearing capacity shall be provided. Also, the falsework drawings shall show the maximum horizontal distance that the top of a falsework pile may be pulled in order to position it under its cap. The falsework plans shall show the maximum allowable deviation of the top of the pile, in its final position, from a vertical line through the point of fixity of the pile. The calculations shall account for pile stresses due to combined axial and flexural stress and secondary stresses. The design calculation shall show the stresses and deflections in load supporting members.

BACK

1.4.9.4 Falsework – (continued)

Spread Footings

Design spread footings in accordance with AASHTO Standard Design Specifications For Highway Bridges.

When spread footings are used to support falsework, the falsework plans shall specify the minimum required bearing capacity, depth of embedment for the footings, and maximum allowable settlement. Spread footings shall be designed to adequately resist all imposed vertical loads and overturning moments. The calculations provided for the spread footings shall include the soil parameters and groundwater conditions used in design. Design calculations for allowable bearing capacity and settlement shall be provided. The estimated footing settlement under the imposed design loads shall be shown on the plans. Provisions for addressing the effects of footing and falsework settlement shall be provided.

Bracing

Bracing shall not be attached to concrete traffic barrier, guardrail posts, or guardrail.

All falsework bracing systems shall be designed to resist the horizontal design loads in all directions with the falsework in either the loaded or unloaded condition. All bracing, connection details, specific locations of connections, and hardware used shall be shown in the falsework plans. Falsework diagonal bracing shall be thoroughly analyzed with particular attention given to the connections. The allowable stresses in the diagonal braces may be controlled by the joint strength or the compression stability of the diagonal.

To prevent falsework beam or stringer compression flange buckling, cross-bracing members and connections shall be designed to carry tension as well as compression. All components, connection details and specific locations shall be shown in the falsework plans. Bracing, blocking, struts, and ties required for positive lateral restraint of beam flanges shall be installed at right angles to the beam in plan view. If possible, bracing in adjacent bays shall be set in the same transverse plane. However, if because of skew or other considerations, it is necessary to offset the bracing in adjacent bays, the offset distance shall not exceed twice the depth of the beam.

Bracing shall be provided to withstand all imposed loads during erection of the falsework and all phases of construction for falsework adjacent to any roadway, sidewalk, or railroad track which is open to the public. All details of the falsework system which contribute to horizontal stability and resistance to impact, including the bolts in bracing, shall be installed at the time each element of the falsework is erected and shall remain in place until the falsework is removed. The falsework plans shall show provisions for any supplemental bracing or methods to be used to conform to this requirement during each phase of erection and removal. Wind loads shall be included in the design of such bracing or methods.

Deck Overhang Bracket

There are a few design examples in the Construction Handbook for Bridge Temporary Works.

BACK

1.4.9.5 Shoring

Show the approximate location and extent of any anticipated shoring.

Show a typical cross-section of the area where shoring may be needed and/or other cross-sections where unusual conditions may make shoring an issue.

To cover inadvertent exclusions or omissions, a note similar to the following may be added: "Provide all shoring as required for construction. The locations and limits shown are only to alert the Contractor that shoring may be needed. The Contractor shall determine the actual locations and limits of all shoring required."

1.4.9.6 Cofferdams and Seals

(1) Seals, General - Seals should be used only when the sheet piles cannot be driven to sufficient depth to cut off the water pressure.

The sheet piling must penetrate and form a seal in the soil so that there is no water flow under the sheet piling. In practice there will be some water entering the cofferdam. Energy is dissipated as the water flows down around the bottom of the sheet piles. A flow net must be developed to determine the actual hydrostatic forces. The equipotential flow lines will show a reduction in the hydrostatic uplift forces. The hydrostatic uplift forces will be resisted by the friction between the soil and the sheet piles and the buoyant weight of the soil plug. Additionally, horizontal hydrostatic forces are present and must be designed for. These are special conditions and require detailed Hydraulic and Foundation studies.

(2) Cofferdams Without Seals - There may be some locations and soil types where a seal may not be required for footing and column construction. The normal sequence of construction for a cofferdam without a seal includes:

1. **Water level is the same inside and outside the cofferdam**

   - Cofferdam is constructed - normally driven interlocking steel sheet pile.
   - Vent holes are cut in the sheet piling - vent holes are placed at the maximum design water level elevation and allows water to enter the cofferdam. A vent hole must be cut at the design elevation to prevent cofferdam failure.
   - Material is excavated inside the cofferdam to the bottom of the footing elevation. Excavation may also be done after dewatering, when there is no seal required, if the internal bracing is in place.
   - Internal bracing is placed - usually horizontal bracing consists of wales, frames, and/or struts to resist the horizontal hydrostatic forces.
   - Footing piles are driven - when required. This may also be done after dewatering and after excavation.

BACK

1.4.9.6 Cofferdams and Seals – (continued)

2. **Water is removed from the cofferdam**

   - Continuous pumping system is installed - cofferdams are never completely watertight and a sump system is normally installed to keep the cofferdam relatively dry.
   - Piles, if used, are cut off to the specified elevation.
   - Footing and column are constructed in the dry.

3. **Cofferdam is flooded**

   - Internal bracing is removed.
   - If agreed to by the environmental section, riprap is placed before or after the sheet piling is removed. It may be desirable to place riprap inside the cofferdam. Check with the Foundation designer.
   - Sheet piling are extracted.

(3) Cofferdam with a Seal - A seal is usually an unreinforced mass of concrete that seals the bottom of a cofferdam and allows construction of the footing and column inside of a dewatered or dry cofferdam. The normal sequence of construction of a cofferdam with a seal includes:

1. **Water level is the same inside and outside the cofferdam**

   - Cofferdam is constructed - normally driven interlocking steel sheet pile.
   - Vent holes are cut in the sheet piling - vent holes are placed at the maximum design water level elevation and allows water to enter the cofferdam. A vent hole must be cut at the design elevation to prevent cofferdam failure. The contractor may propose to use a lower vent elevation and thinner seal, if the anticipated water elevation is lower at the time of construction.
   - Material is excavated inside the cofferdam to the bottom of the seal elevation.
   - Internal bracing is placed - usually horizontal bracing consists of wales, frames, and/or struts to resist the horizontal hydrostatic forces.
   - Footing piles are driven - when required.
   - Seal concrete is placed
   - With a tremie: A tremie is a long pipe that extends to the bottom of the seal and prevents the concrete from segregating as it passes through the water, as well as permitting a head to be maintained on the concrete during placement. The bottom of the tremie is kept submerged in the mass of concrete to minimize water intrusion into the mix.
   - With a concrete pump: Similar principle to the tremie.

1.4.9.6 Cofferdams and Seals - (continued)

(3) Cofferdam with a Seal - (continued)

2. Water is removed from the cofferdam

- Cofferdam is dewatered, only after the concrete has gained sufficient strength to resist hydrostatic loads.
- Continuous pumping system is installed - cofferdams are never completely watertight and a sump system is normally installed to keep the cofferdam relatively dry.
- Piles, if used, are cut off to the specified elevation.
- Seal is prepared for footing construction - leveled and cleaned as needed for constructing footing forms.
- Footing and column are constructed in the dry.

3. Cofferdam is flooded

- Internal bracing is removed.
- Rip-rap is placed before or after the sheet piling are removed. It may be desirable to place rip-rap inside the cofferdam. Check with the Foundation Designer.
- Sheet piling are extracted.

BACK

1.4.9.6 Cofferdams and Seals - (continued)

(3) Cofferdam with a Seal - (continued)

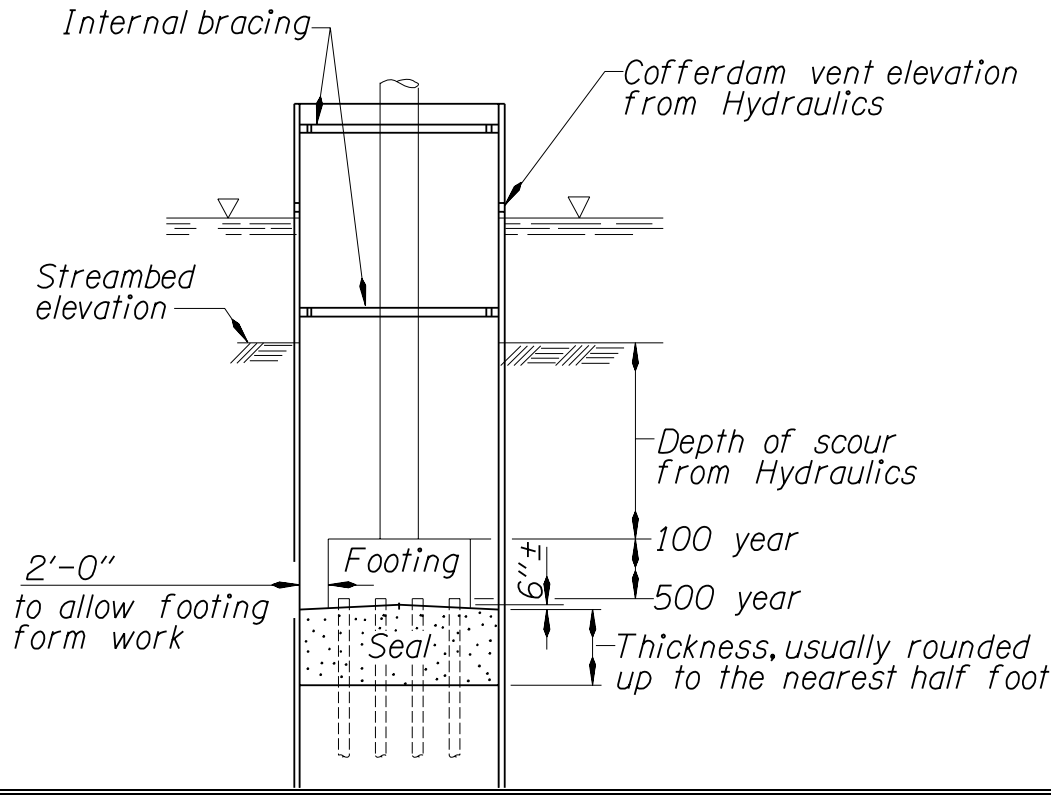

SEAL THICKNESS DETAIL

Figure 1.4.9.6A

(4) Seal Design Considerations - The seal forms a plug at the bottom of the cofferdam, using a combination of seal mass and/or friction between the seal concrete and piling to resist the hydrostatic forces.

Scour protection for the footing influences the location (depth) of the footing and must be incorporated into the design. The Hydraulics Unit will provide this information.

The top of the footing should be below the 100 year scour depth and the bottom of footing below the 500-year scour depth. The Hydraulics Unit will provide these elevations.

Normally the friction or bond between the seal concrete and steel piling is assumed to be 10 psi for the surface area of the embedded pile. Check with the Foundation Designer for bond values of other pile types.

An uplift capacity of driven piling should also be obtained from the Foundation Designer to include in the overall stability or factor of safety of the system.

BACK

1.4.9.6 Cofferdams and Seals - (continued)

The minimum factor of safety of the system should be 1. Note that the actual factor of safety is greater because the bond between the seal and sheet piling has been neglected.

A general rule of thumb, or good starting point, for seal thickness is 0.40 times (head of water plus an estimated seal thickness) for spread footings and 0.25 times (head of water plus an estimated seal thickness) for pile supported footings.

Use a minimum depth of seal of 4 feet, where piles are calculated to resist uplift in order to reduce seal depth.

Design pile footings, that includes a seal, for bending and shear ignoring any beneficial effects of the seal. This is due to the uncertain quality of the seal concrete and because the seal may be reduced or eliminated during construction.

There are two ways of looking at the cofferdam system when determining the seal thickness. Each should result in the same seal thickness:

Method 1: Assume there is some leakage around the seal and the actual water level inside the cofferdam is at the top of the seal. Then the hydrostatic uplift force is based on the depth of water to the top of the seal, but because it is submerged the weight of the seal must be determined using the buoyant weight.

Method 2: Assume the seal prevents any leakage and the hydrostatic uplift depth is to the bottom of the seal. Then the full weight of the seal is used to resist the uplift forces.

Spread Footing Example (using method 1):

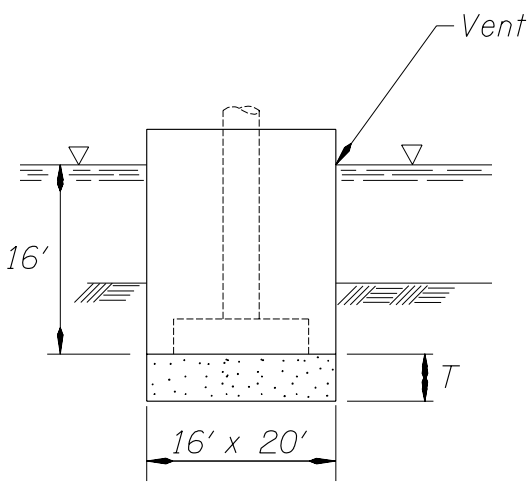

Figure 1.4.9.6B

Determine the seal thickness for a 16' x 20' cofferdam. Water depth is 16 feet from the vent to the top of the seal.

Estimated T = 0.4(16' + 10' est. thickness) = 10.4'

Summing vertical forces:

Uplift force = weight of water displaced
= (Area)(Depth of water)(Unit force of water)
= (16')(20')(16' water depth)(0.0624 k/ft^3)

Force of seal = buoyant force of the seal
= (16')(20')(T' seal thickness)(0.15 – 0.0624 k/ft^3)

Uplift force = Force of seal

Solving for T:

T = 11.4' - use 11.5' seal thickness

Note: F.S = 1.0 for T = 11.4'

BACK

1.4.9.6 Cofferdams and Seals - (continued)

Pile-supported Example (using method 1):

Determine the seal thickness for a 16' x 20' cofferdam, with 12 – 12" diameter steel piles. Uplift capacity is 10 kips per pile. Water depth is 16 feet from the vent to the top of the seal.

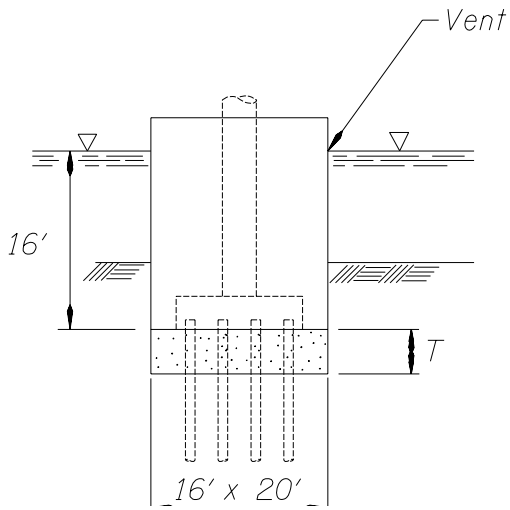

Figure 1.4.9.6C

Estimated T = (0.25)(16' + 10' est. thickness) = 6.5'

Summing vertical forces:

Uplift force = weight of the water displaced
= (16')(20')(16' water depth)(0.0624 k/ft^3)
= 319.49 k

Weight of seal = buoyant weight of the seal
= (16')(20')(T' seal thickness)(0.150 – 0.0624 k/ft^3)
= 28.03(T) k/ft

Pile displaced concrete = (12 pile)(0.785 ft²)(T')(0.150 – 0.0624 k/ft^3)
= 0.825(T) k/ft

Bond on piles = (12 pile)(π)(1')(6.5')(0.010 ksi)(144 in^2/ ft^2) = 352.86 k

Pile uplift capacity = (12 pile)(10 k/pile) = 120 k < 352.86 k use 120 k

Uplift force = (Seal weight) - (Pile disp. conc.) + (Pile uplift capacity)
319.49 k = 28.03(T) – 0.825(T) + 120

Solving for T:

T = 7.33' - use 7.5' seal thickness.

Note: F.S. = 1.0 for T = 7.33'

BACK

1.4.10 Placing Buildings Under ODOT Bridges

The placement of buildings below ODOT bridges is strongly discouraged. If, however, local public agencies request and are given approval to place buildings below ODOT bridges, the following requirements must be satisfied:

- Maintain the structural integrity of the bridge:
  - Any excavation below the bottom of a footing adjacent to the proposed building, must be adequately shored conforming to Standard Specifications Section 00510.44.
  - Any soil removed within the vicinity of a bridge footing, must be replaced and compacted according to the Standard Specifications Section 00510.46(a).
- Bridge maintenance provisions:
  - 10' vertical clearance between roof and superstructure for snooper cranes or hanging scaffolds, or
  - The building roof shall be designed to act as a work platform for maintenance or construction activities. Design the roof sheathing and purlins for a working load of 250 lb. point load or 100 psf, whichever controls. The design area shall extend to 10' beyond the shadow of the structure. Members below the purlin level shall be designed for a working load of 50 psf for an area of 10' x 20'. The minimum vertical clearance shall be 3'.
- Future seismic retrofit provisions:
  - Placement of the building will allow for increasing the size of the existing footing or footings by 50 percent plus an allowance of 5' for work area.
  - The building owners should be made aware that future footing excavations and/or pile driving could cause vibrations in their building with a potential for damage to the building or contents. The State will not be responsible for any damage to the building or contents, caused by such construction.

BACK

1.4.10 Placing Buildings Under ODOT Bridges - (continued)

- Future bridge and/or widening provisions:
  - The need for a new bridge or future widening of the bridge should be evaluated. If the potential exists, placement of the building will allow for increasing the structure width and construction of new footings. An allowance of 5' around the future footings should be made for work area

  - The building owners should be made aware that future footing excavations and/or pile driving could cause vibrations in their building with a potential for damage to the building or contents. The State will not be responsible for any damage to the building or contents, caused by such construction.

- Falling object protection:
  - Place protective fencing on the bridge above to cover the limits of any ground activity below the bridge. The State will not be responsible for any damage to the building or contents, caused by falling objects.

- Bridge fire protection:
  - The building shall be constructed of non-flammable materials and be equipped with an automatic sprinkler system.

  - The building shall not be used to store large quantities of flammable materials.

- Right of access:
  - ODOT and or contractor employees shall be given access to the property and/or building as needed to perform any construction or maintenance activities.

Any proposal must be submitted to the District Manager and sent for review and approval to the Bridge Operations Managing Engineer, Bridge Engineering Section. The proposal must include a drawing or drawings showing the existing bridge with all pertinent members dimensioned and showing the proposed building with all pertinent dimensions, clearances, materials and roof design loads. The drawing or drawings shall be prepared, signed, and stamped with a seal of an engineer registered to practice in the State of Oregon.

BACK

1.5 METRIC CONVERSION

1.5.1 Introduction

The International System of Units (SI), a modern version of the metric system of measurement, is being adopted throughout the world. To remain competitive in the global economy, Congress determined the United States must convert to SI.

FHWA was planning to require ODOT and local agencies to submit contract documents in metric by September 30, 1996. Congress then postponed the implementation date to September 30, 2000 and later completely removed the requirement.

After removal of the Metric requirement, most states have reverted back to English units or dual units.

ODOT believes it is important to be in alignment with other state DOT's and local government partners. ODOT began converting back to English units in late 2002 and began contracting state projects in English units in early 2004.

This section has been retained to provide a guide to the units and conversions most commonly used by the Bridge Engineering Section during the Metric era. This section may help with the interpretation of plans produced during the Metric era.

1.5.2 Basic Units

There are five metric "basic units", see Figure 1.5.2A, that concern bridge design and construction.

BASIC ODOT BRIDGE DESIGN METRIC UNITS

Quantity	Unit	Symbol
Length	Meter	m
Mass	Kilogram	kg
Time	Second	s
Temperature	Celsius	^{o}C
Plane angles	degree,minute,second	0^{0} , 0', 0"

Figure 1.5.2A

BACK

1.5.2.1 Decimal Prefixes

Many numbers resulting from metric calculations are too large or small to be practically used. Three decimal prefixes, see Figure 1.5.2.1A, are commonly used with the base units to produce manageable numbers.

DECIMAL PREFIXES

Prefix	Symbol	Magnitude	Expression
Mega	M	10^6	1 000 000 (one million)
Kilo	k	10^3	1000 (one thousand)
Milli	m	10^{-3}	0.001 (one thousandth)

Figure 1.5.2.1A

1.5.3 Derived Units

In addition to the five basic units, there are three metric units derived from the basic units that are used frequently in structural calculations, see Figure 1.5.3A.

DERIVED UNITS

Quantity	Name	Symbol	Expression
Force	Newton	N	$N = kg \bullet m/s^2$
Pressure,stress	Pascal	Pa	$Pa = N/m^2$
Energy	Joule	J	$J = N \bullet m$

Figure 1.5.3A

1.5.3.1 Force

In order to perform metric calculations properly, it is important to understand the distinction between mass "kg" and force "N".

In the metric system, there are separate units for mass "kg" and force "N". Mass indicates the quantity of matter in an object. Force or "force of gravity" is the acceleration due to gravity the object experiences in a particular environment. The mass must be converted to force before computing structural reactions, shears, moments, or internal stresses. Force "N" = mass times acceleration due to gravity. The metric acceleration of gravity on the earth's surface is 9.807 m/s^2 (32.2 ft/s^2 x 0.3048 m/ft). One newton = one kilogram x one meter/(one second)^2.

BACK

1.5.3.1 Force - (continued)

For example, see Figure 5.5.3.1A, a simply supported beam 10 meters long with a mass of 1000 kg/m would have a total mass of 10 000 kg. However, the dead load or force on a beam, on the earth's surface, used to calculate the reactions, shears, moments, etc. would be 1000 x 9.807 = 9807 N/m. The distinction between mass and force in structural calculations is very important.

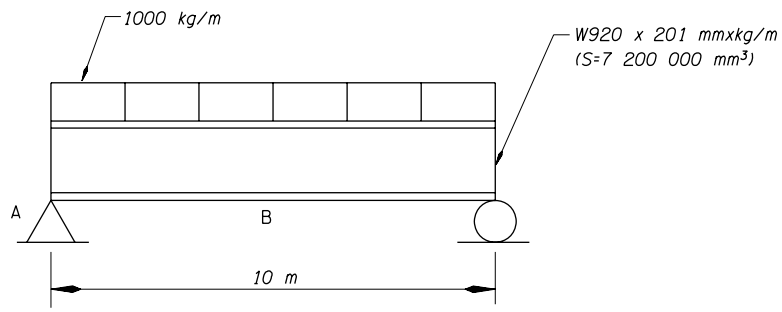

Note: Lb. is understood to be Lb.-force.

Quantity	Inch-Pound Units	Metric Units
Dead Load (Force)	= 672+135 = 807 lb/ft	=(1000+201) (9.807) = 11 777.8 N/m
V_A = wl/2	= (807)(32.808)/2 = 13,238 lb	= (11 777.8) (10)/2 = 58 889 N
$M_B = wl^2/8$	= $(807)(32.808)^2/8$ = 108,578 ft-lb	= $(11\ 777.8)(10)^2/8$ = 147 222 N•m
F_B = M/s	= (108,578)(12in/ft)/440 = 2961 psi	=$(147\ 222)(10^9 mm^3/m^3)/7210x10^3$ = 20 419 000 Pa = 20 419 kPa = 20.419 MPa

Figure 1.5.3.1A

1.5.3.2 Stress

The pascal is not universally accepted as the only unit of stress. Because steel section properties are expressed in millimeters, it may be more convenient to express stress in a derivative of pascals - newtons per square millimeter (1 N/mm^2 = 1 MPa).

1.5.3.3 Energy

Although the joule is a standard metric unit, it is typically not used in structural design. Moments are always expressed in terms of Nm, or the derivative kN•m.

BACK

1.5.4 Metric Conversion Factors

Figure 1.6.4A, is intended to provide common conversion factors and show typical equivalent conversion units between "inch-pound" and "metric" values. The factors will allow the designer to get a feel for the magnitude of metric units as compared to inch-pound units.

COMMON METRIC UNITS AND CONVERSIONS

Quantity	From Inch-Pound Units	To Metric Units	Multiply by
Length	mile foot inch	km m mm	1.609 344 0.304 8 25.4
Area	square mile acre square yard square foot square inches	km^2 m^2 m^2 m^2 mm^2	2.590 00 4 046.87 0.836 127 4 0.092 903 0 645.160
Volume	cubic yard cubic foot	m^3 m^3	0.764 555 0.028 316 8
Mass*	Lb Ton	kg kg	0.453 592 0.907 184
Mass/unit length*	Plf	kg/m	1.488 16
Mass/unit area*	Psf	kg/m^2	4.882 43
Mass density*	Pcf	kg/m^3	16.018 5
Force	Lb metric kg kip	N kN kN	4.448 22 9.806 65 4.448 22
Force/unit length	Plf Klf	n/m kN/m	14.593 9 14.593 9
Pressure, stress, Modulus of elasticity	Psf ksf psi ksi	Pa kPa kPa MPa	47.880 3 47.880 3 6.894 76 6.894 76
Bending moment, torque, moment of force	ft-lb ft-kip	N•m kN•m	1.355 82 1.355 82
Moment of inertia	in^4	mm^4	416 231
Section modulus	in^3	mm^3	16 387.064
Temperature	^oF	^oC	5/9 (^oF - 32)

Figure 1.5.4A

*Note: The Inch-Pound Units system using "a mass which weighs such and such pounds" and converting to true Metric Units masses.

BACK

1.5.5 Metric Procedural Rules

1.5.5.1 Writing Metric Symbols and Names

- Unit symbols should be in lower case except for newton (N), pascal (Pa), and mega (M).
- Unit names should always be printed in lower case, i.e., newtons, pascals, kilogram.
- Do not use the plural of unit symbols (write 45 kg, not 45 kgs), but do use the plural of written unit names (several kilograms).
- Leave a space between the numeral and a unit symbol. Write "70 kg" or "30 ^{o}C", not "70kg" or "30°C".
- Do not use a period after the symbol. Write "70 kg", not "70 kg., except when it comes at the end of a sentence.
- Indicate the product of two or more units in symbolic form by using a dot between the symbols, i.e., N•m or kg•m.
- Do not mix names and symbols. Write N•m or newton meter, not N•meter or newton•m.
- Do not leave a space between a decimal prefix and a unit symbol. Write "MPa" or "kN•m", not "M Pa" or k N•m".

1.5.5.2 Writing Numbers

- Use decimals, not fractions. Write 0.75 m, not 3/4 m.
- Use a zero before the decimal point for values less than one. Write 0.65 kg, not .65 kg.
- Spaces are frequently used to separate blocks of three digits either side of the decimal point. Never use a comma to separate the blocks. For plan dimensions, it will be acceptable to either insert or omit the space. Write 16 387.064 or 16387.064, but never 16,387.064.

1.5.5.3 Conversions and Rounding

When converting from inch-pound units to metric units, round the metric value to the same number of digits as there were in the inch-pound number, i.e., 235.75 lb x 0.453 592 kg/lb = 106.9343 kg which should be rounded to 106.93 kg.

Also see *ASTM E380* , Section 5, for general guidelines.

BACK

1.5.6 Bridge Plan and Preparation Guidelines

1.5.6.1 Plan Dimensions

For dimensions and elevations use:

- Millimeters in standard drawings and structural details.
- Meters for plan dimensions (structure and span lengths, structure width, lane and shoulder widths, etc.) and other long dimensions.
- Meters to three places for elevations, preceded with the abbreviation El. (El. 309.564).

To eliminate to repetitive use of (mm) and (m), these will not be used for dimensions in millimeters and elevations in meters. Meter dimensions should be followed by the symbol (m).

The following note should be shown on the plans - "All dimensions are in millimeters (mm) and all elevations are in meters (m), except as noted.".

At all locations in notes, etc. use (mm) and (m) notations.

1.5.6.2 Reinforcing Steel

A new series of soft converted reinforcing steel sizes should be used. Figures 1.5.6.2A and 1.5.6.2B on the following page show the metric properties for conventional and prestressing steel. The equivalent area in square inches is shown for comparison purposes. The metric bar size is roughly equal to the bar diameter in millimeters.

The length of straight bars should be shown in 100 millimeter increments where possible. Bent bars should be detailed to the nearest 20 millimeter total length.

1.5.6.3 Fasteners

Fasteners are to be called out as a soft conversion to the nearest 0.1 mm. Use the appropriate English specifications for bolts, nuts and washers.

1.5.6.4 Structural Steel

The structural steels called out in ODOT plans and specifications all have metric equivalents. These equivalent specifications have the same number (AASHTO or ASTM) followed by a capital M; e.g. AASHTO M 270M or ASTM A 709M.

Structural steel shapes will be a soft conversion. AISC conversion tables are available in each design room.

Plate thickness should be a soft conversion and called out to the nearest 0.1 mm.

Normally plate widths should be a hard metric conversion. In some situations it may be appropriate to use soft converted plate widths. If repetitious pieces have a dimension that can use a common english plate width, one plate cut can be avoided and it will be more economical to fabricate the item.

1.5.6.4 Structural Steel - (continued)

REINFORCING BAR COMPARISON

Metric Bar	English Bar	English Dia. (in)	English Area (in^2)	English Weight (lb/ft)	Metric Dia. (mm)	Metric Area (mm^2)	Metric Mass (kg/m)
#10	#3	0.375	0.11	0.376	9.5	71	0.560
#13	#4	0.500	0.20	0.668	12.7	129	0.994
#16	#5	0.625	0.31	1.043	16.0	199	1.552
#19	#6	0.750	0.44	1.502	19.1	284	2.235
#22	#7	0.875	0.60	2.044	22.2	387	3.042
#25	#8	1.000	0.79	2.670	25.4	510	3.973
#29	#9	1.128	1.00	3.400	28.7	645	5.060
#32	#10	1.270	1.27	4.303	32.3	819	6.404
#36	#11	1.410	1.56	5.313	35.8	1006	7.907
#43	#14	1.693	2.25	7.650	43.0	1452	11.38
#57	#18	2.257	4.00	13.60	57.3	2581	20.24

Figure 1.5.6.2A

Stock Bar Lengths

- #10 – 6.09 and 12.19 m
- #13 & # 16 – 6.09, 9.14 and 12.19 m
- #19 thru #36 – 18.28 m
- #43 thru #57 – 18.28, 21.33 and 24.38 m

PRESTRESSING STEEL - Conversion of prestressing steel should be a soft conversion using the Table below. Make sure Standard Drawings and plan detail sheets specify the correct strand diameters.

SEVEN WIRE, UNCOATED STRAND
(270 Grade Low-Relaxation AASHTO M203 (ASTM A-416))

Metric Size (mm)	English Size (inch)	Metric Ult. (kN)	English Ult. (lbs)	Metric Area (mm^2)	English Area (in^2)	Metric Mass (kg/m)	English Weight (lb/ft)
9.53	3/8	102.3	23,000	54.84	0.085	0.432	0.290
11.11	7/16	137.9	31,000	74.19	0.115	0.582	0.390
12.70	1/2	183.7	41,300	98.71	0.153	0.775	0.520
15.24	0.600	260.7	58,600	140.0	0.217	1.102	0.740

Figure 1.5.6.2B

BACK

1.5.7 Miscellaneous Common Conversions

Dead Loads:	Inch-Pound	Metric
Future Wearing Surface ..	..25 psf	1.2 kN/m^2
Reinforced Concrete ...	..150 pcf	23.6 kN/m^3
Soil	120 pcf	18.9 kN/m^3
Material Strengths		
Concrete (f'c)	3300 psi	25 MPa
	4000 psi	30 MPa
	4500 psi	35 MPa
	5000 psi	35 MPa
	5500 psi	40 MPa
	6000 psi	45 MPa
	6500 psi	45 MPa
	7000 psi	50 MPa
Reinforcing Steel		
Grade 40	40 ksi	300 MPa
Grade 60	60 ksi	420 MPa
Structural Steel		
Grade 36	36 ksi	250 MPa
Grade 50	50 ksi	345 MPa
Grade 70	70 ksi	480 MPa
Reinforcing Steel Clearances	1.0 in	25 mm
	1.5 in	40 mm
	2.0 in	50 mm
	2.5 in	65 mm
	3.0 in	75 mm
	4.0 in	100 mm
Aggregate sizes.....	1-1/2 in	37.5 mm
	1 in	25.4 mm
	3/4 in	19.0 mm
Deck Concrete	4500 psi	Class 30 (4350 psi)
End Panel Concrete	3300 or 4500 psi	Class 30 (4350 psi)
Minor Structure Concrete	3000 psi	Class 20 (2900 psi)

BACK

1.6 ODOT Design Instructions for AASHTO LRFD Bridge Design Specifications

Design according to the AASHTO *LRFD Bridge Design Specifications* except as follows:

LRFD 2.6.4 Hydraulic Analysis and LRFD 3.7.5 Change in Foundations Due to Limit State for Scour

In lieu of LRFD 2.6.4.4.2 bullet two and LRFD 3.7.5, the Extreme Limit States shall be applied in accordance with Article 3.4.1 and the Extreme Event I Limit State should only include the anticipated scour depth due to channel degradation. LRFD 2.6.4.4.2 bullet one shall still apply. Estimates of channel degradation should be obtained from the Hydraulic Designer.

LRFD 3.6.5 Vehicular Collision Force: CT

Modify AASHTO Section 3.6.5 as follows:

a. For barriers 0-4 feet clear distance from the face of the component to the back side of the rail, provide a special design wall or barrier at least 54 inches high with independent foundation, or use a minimum 36" circular (or equivalent square) column with 1-1/2 % minimum longitudinal steel reinforcement.

b. For barriers 4-9 feet clear distance from the face of the component to the back side of the rail, use 42 inch barrier with no independent foundation, but with standard pin anchorage to subgrade, and apply a column load depending on distance from the column to the edge of lane as follows:
    a. Up to 15 feet clear distance, use 90 kips.
    b. From 15 -30 feet clear distance, use 160 kips.
    c. For greater than 30 feet clear distance, use 290 kips, OR

    Do not apply a column load, but use a minimum 36" circular (or equivalent square) column with 1-1/2 % minimum longitudinal reinforcement.

c. For barriers 10 feet or greater from component, use 42 inch barrier without independent foundation, but with standard pin anchorage to subgrade, and do not apply a column load.

BACK

1.6 ODOT Design Instructions for AASHTO LRFD Bridge Design Specifications - (continued)

(for future use)

1.6 ODOT Design Instructions for AASHTO LRFD Bridge Design Specifications - (continued)

(for future use)

APPENDIX – A

TYPICAL DETAILS AND GUIDELINES

A1.1.8.7 End Bent Details for Prestressed Slabs and Boxes

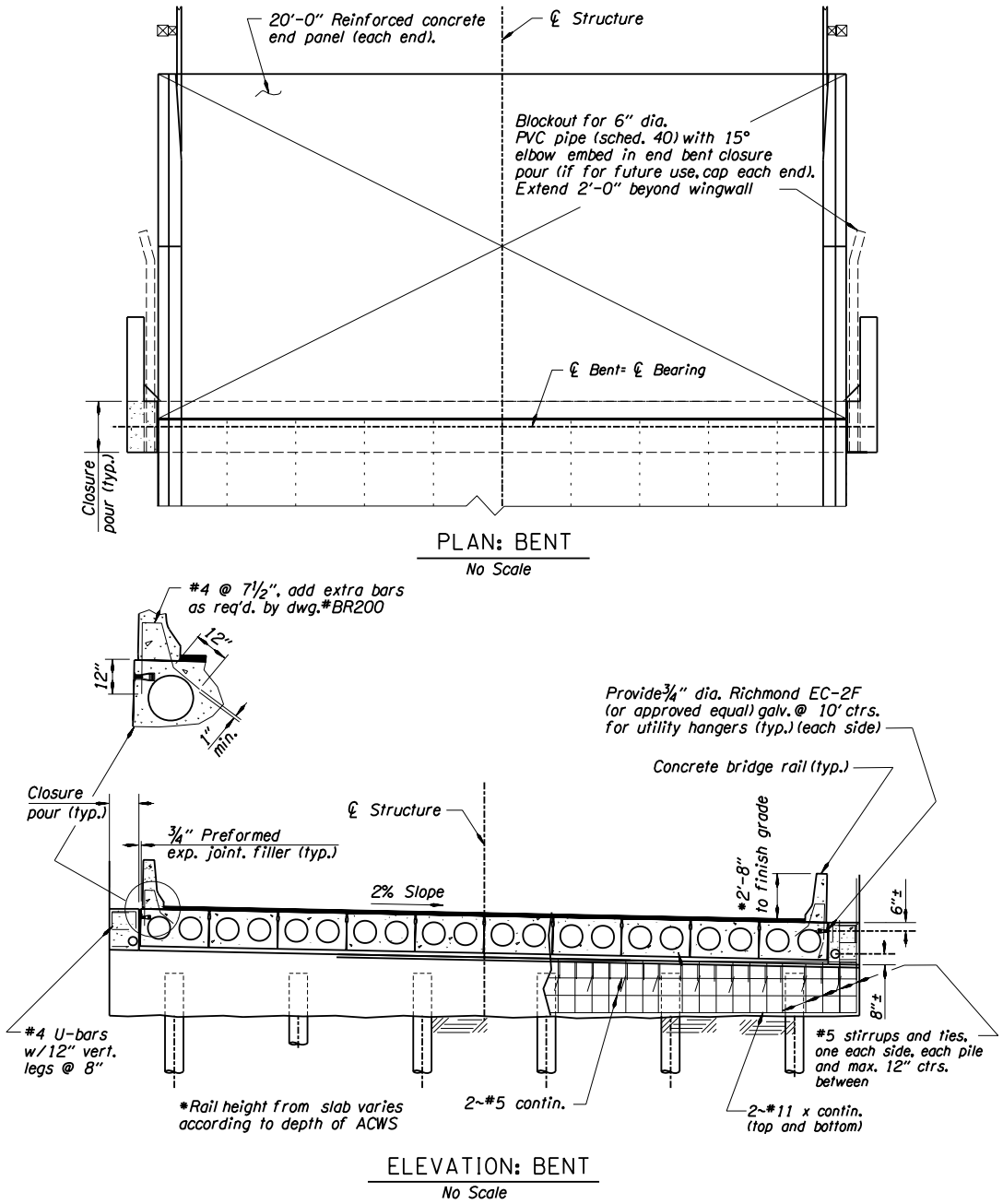

Figure A1.1.8.7A

BACK

A1.1.8.7 End Bent Details for Prestressed Slabs and Boxes - (continued)

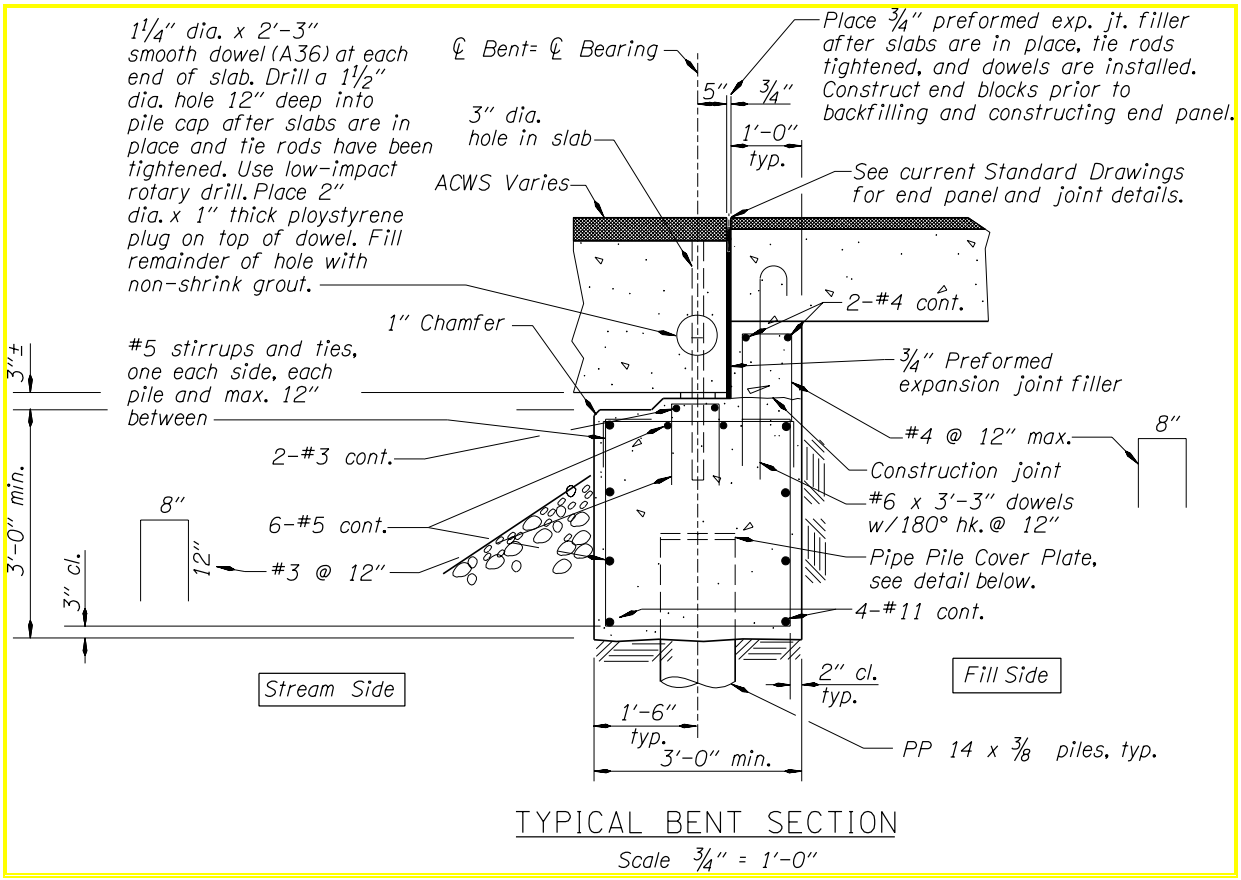

Figure A1.1.8.7B

BACK

A1.1.8.7 End Bent Details for Prestressed Slabs and Boxes - (continued)

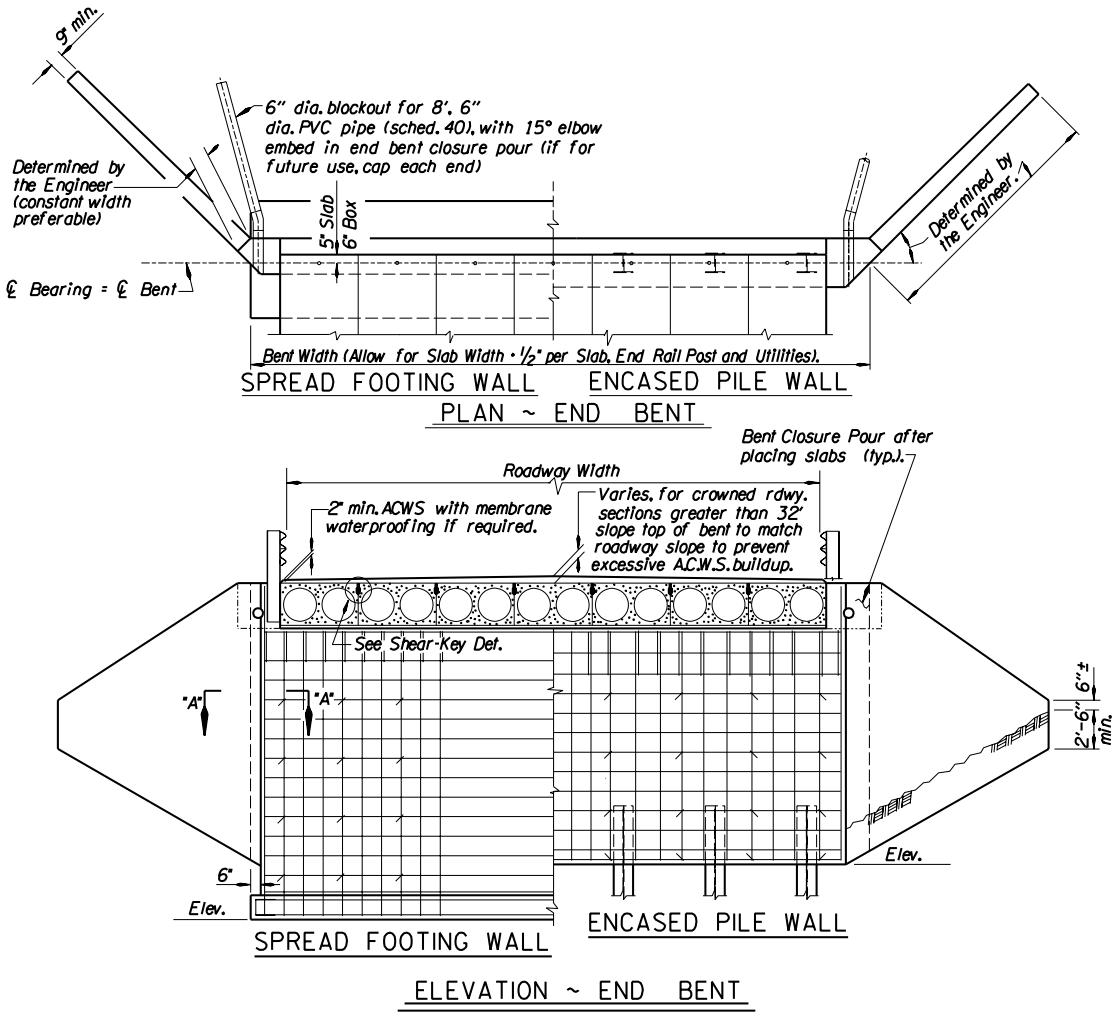

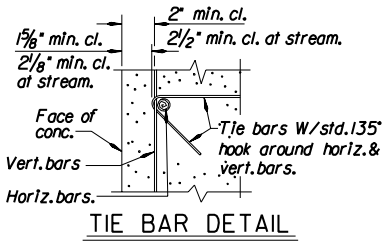

Figure A1.1.8.7C

BACK

A1.1.8.7 End Bent Details for Prestressed Slabs and Boxes - (continued)

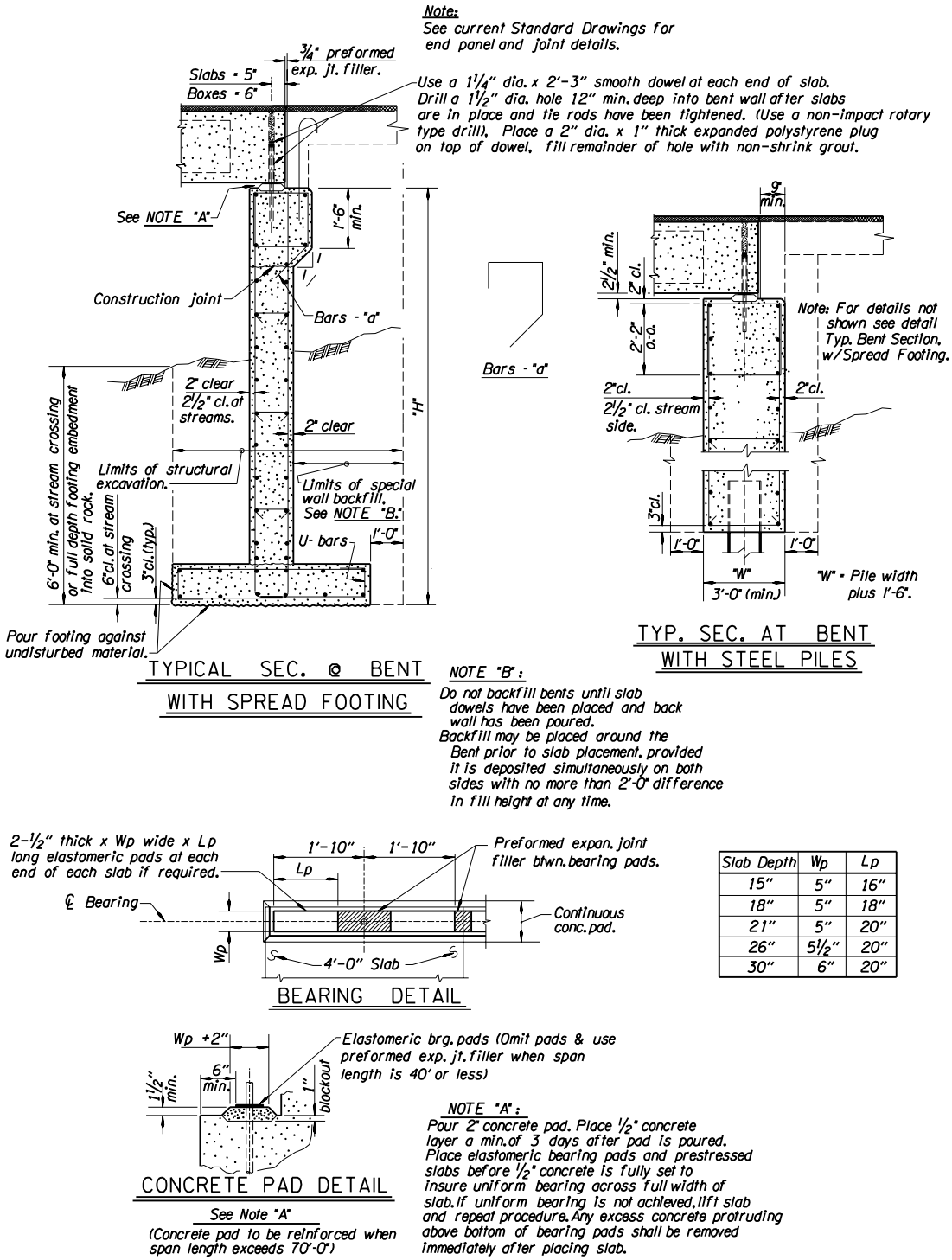

Slab Depth	Wp	Lp
15"	5"	16"
18"	5"	18"
21"	5"	20"
26"	5 1/2"	20"
30"	6"	20"

Figure A1.1.8.7D

BACK

A1.1.8.7 End Bent Details for Prestressed Slabs and Boxes - (continued)

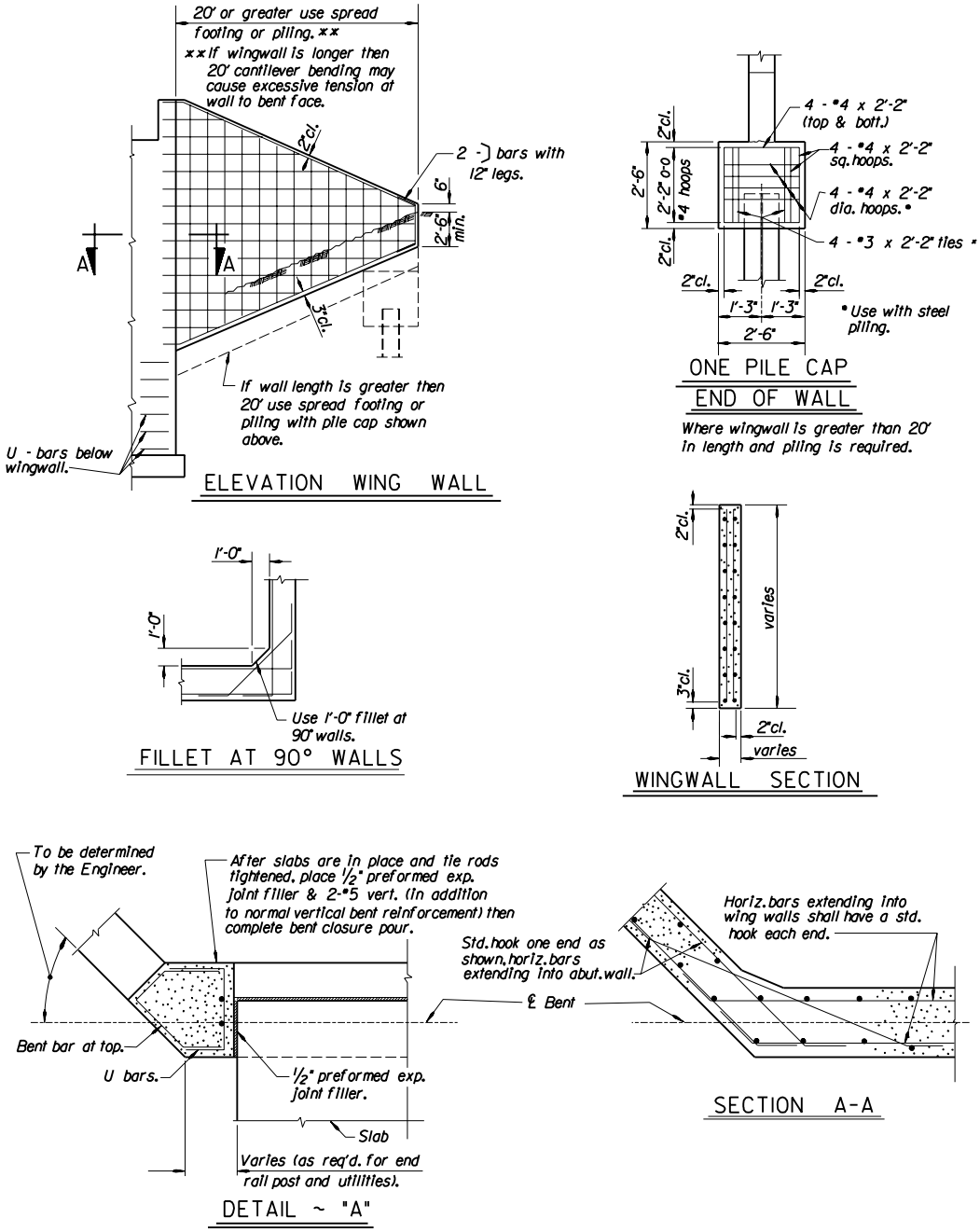

Figure A1.1.8.7E

BACK

A1.1.9.2 Interior Bent Details for Prestressed Slabs and Boxes

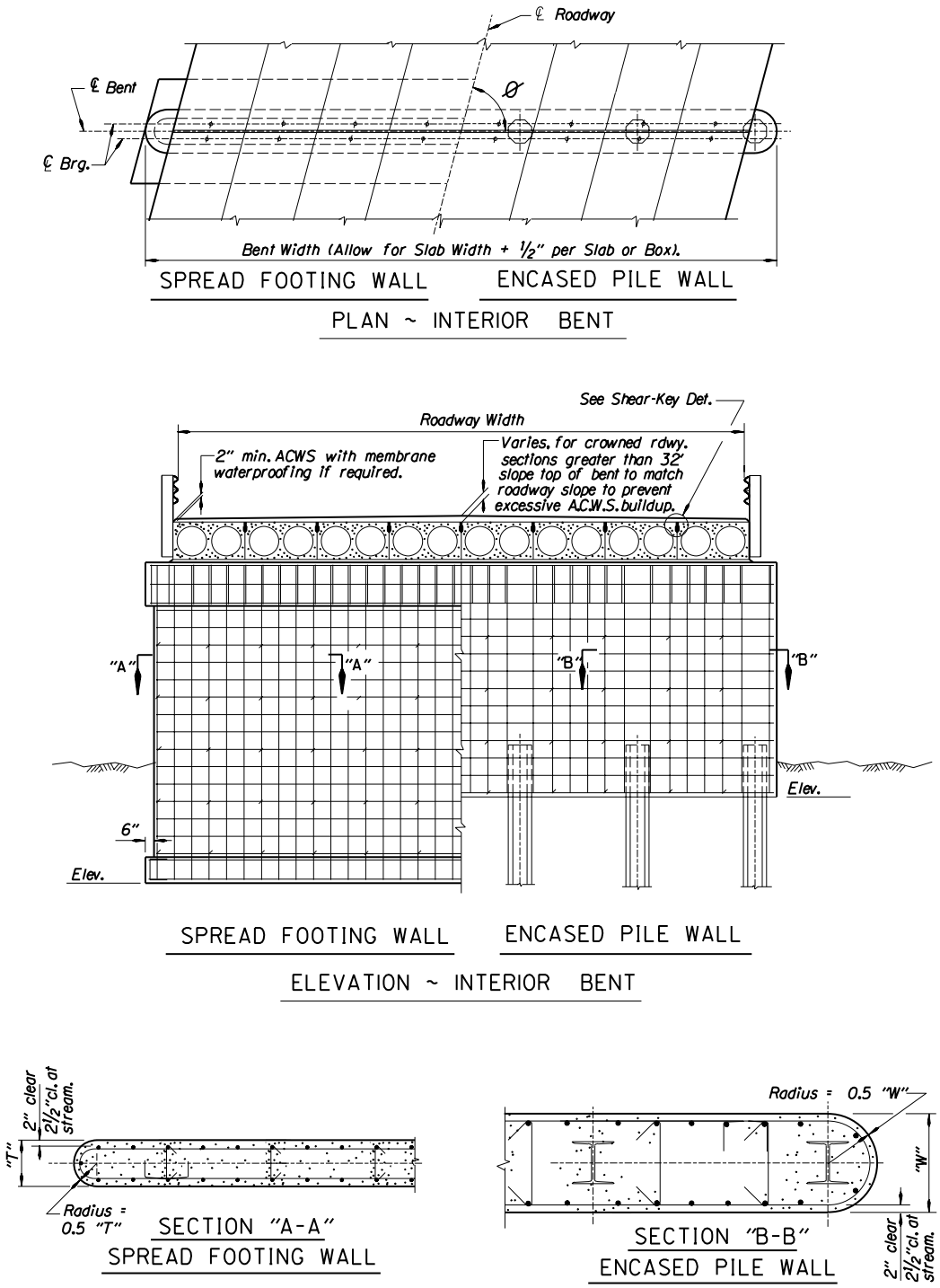

Figure A1.1.9.2A

BACK

A1.1.9.2 Interior Bent Details for Prestressed Slabs and Boxes - (continued)

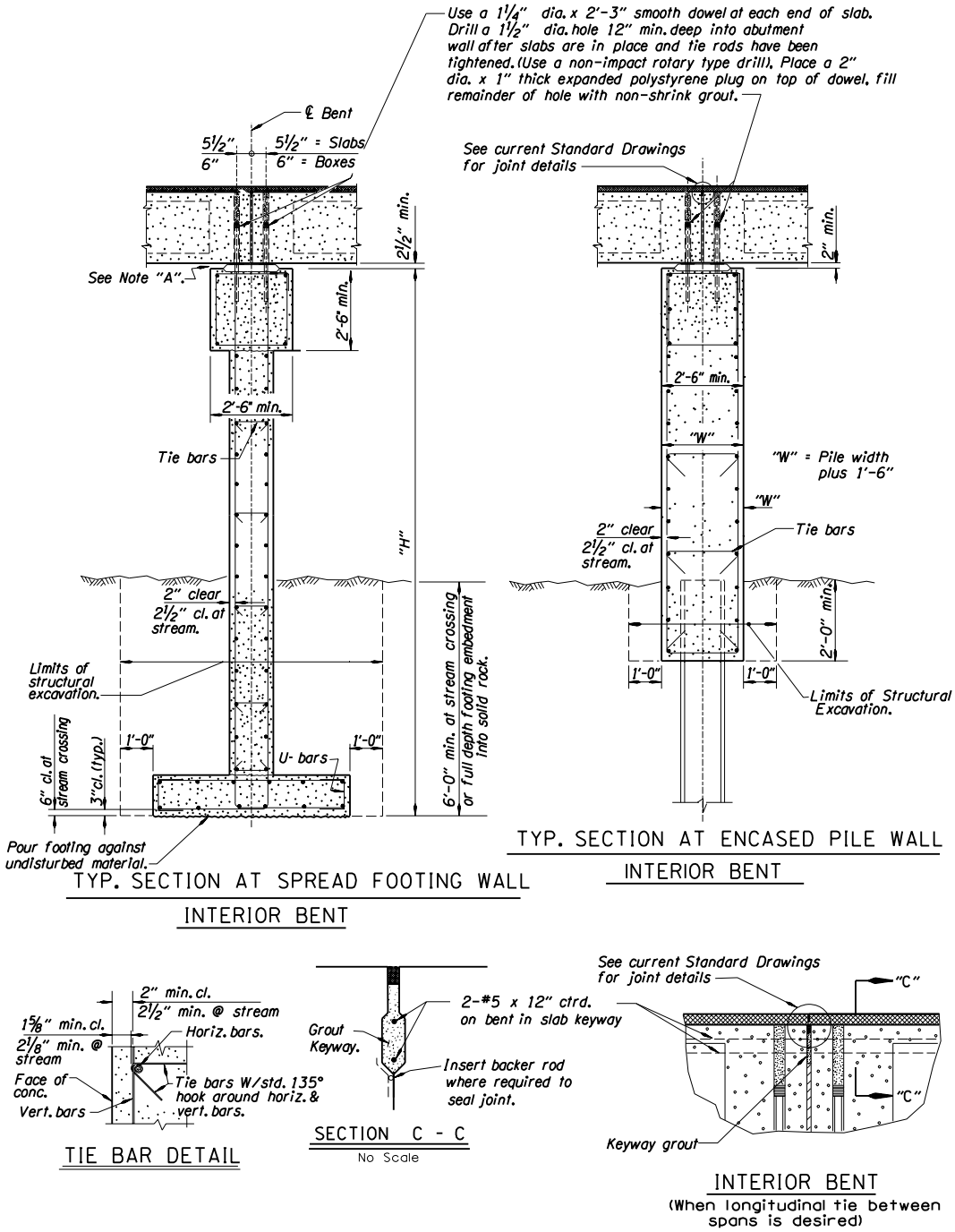

Figure A1.1.9.2B

BACK

A1.1.9.2 Interior Bent Details for Prestressed Slabs and Boxes - (continued)

Slab Depth	Wp	Lp
15″	5″	16″
18″	5″	18″
21″	5″	20″
26″	5½″	20″
30″	6″	20″

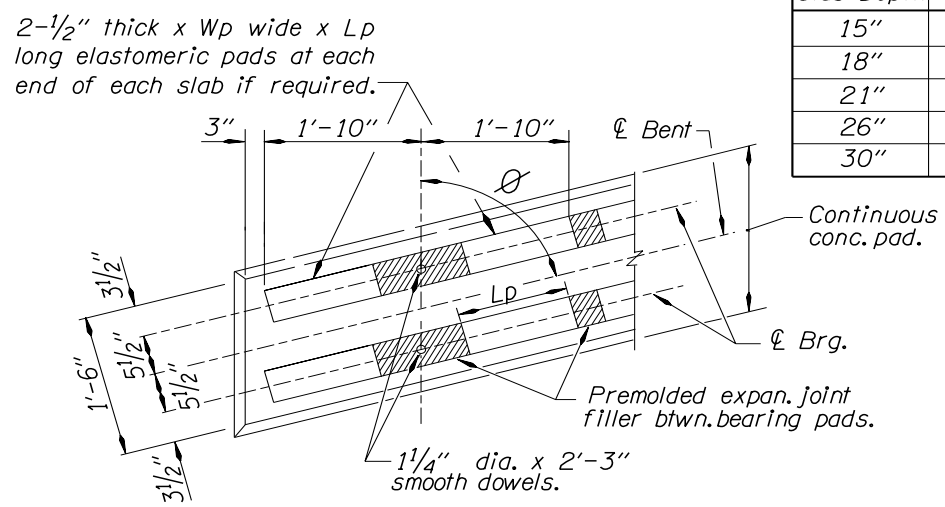

BEARING DETAIL
(PRESTRESSED SLABS)

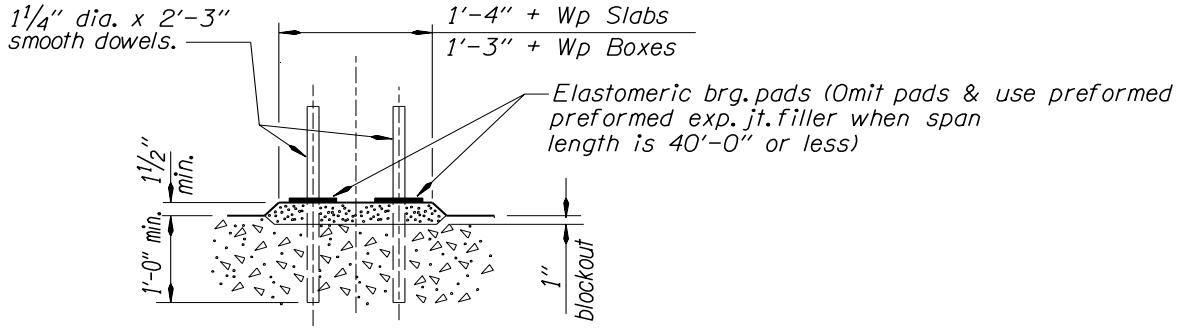

CONCRETE PAD DETAIL

See Note "A" below

(Concrete pad to be reinforced when length exceeds 70′)

NOTE "A":

Pour 2″ concrete pad. Place ½″ concrete layer a min. of 3 days after pad is poured. Place elastomeric bearing pads and prestressed slabs before ½″ concrete is fully set to insure uniform bearing across full width of slab. If uniform bearing is not achieved, lift slab and repeat procedure. Remove any excess concrete protruding above bottom of bearing pads immediately after placing slab.

Figure A1.1.9.2C

BACK

A1.2.5 Cables and Turnbuckles

CABLES

The type of cable used for general construction applications is called "Improved Plow Steel". This cable is designed to be run over pulleys and usually wears out long before it rusts out. Zinc coating is essential in applications such as seismic restraint devices where the cable is stationary and must have a long service life. Bethlehem Wire Rope (a division of Bethlehem Steel) was consulted as to what type of cable would be appropriate for these applications, and agreed with the selection of ASTM A603 structural wire rope. The A603 specification contains provisions for zinc coating and minimum breaking strength. For more information, Bethlehem Wire Rope can be reached at 1-800-541-7673 (EST zone).

Zinc coating comes in three classes with Class C coating having three times the weight per foot of cable than Class A coating. The cost of Class C versus Class A coating of 7/8" diameter wire rope is approximately $1.50 versus $1.20 per foot. Class A coating can be attained by a hot-dip method, while Class C coating requires an electroplating process. Class C coating throughout was chosen because it provides a longer service life and the increase in cost ($0.30 per foot) is relatively small. The cable is only one component in the total seismic restraint installation. The cost of the cable does not include socket connections and anchorage assemblies. The cost of the cable itself will be a small percentage of the total in-place cost of the installation. The cost estimates above were obtained from discussions with Bethlehem Wire Rope. The increase in cost for Class C coating was primarily because Bethlehem can only manufacture Class A coated wire in-house and must special order Class C coated wire.

In the construction of the 6x7 cable, there are 7 strands which each contain 7 wires. The wires in each strand are arranged with 6 wires wrapped around one center wire. The strands are arranged in a similar pattern with six strands being wrapped around one center strand. Usually, the center wire of a strand is a different size than the outer wires. Also, the wires for the center strand are usually different sizes than the wires for the outer strands. A total of four different wire sizes may be required to make the cable, with the center wire in the center strand being a unique size. By allowing this particular wire to have an optional Class A coating, the cable cost can be reduced without a significant loss in service life.

Most wire ropes are supplied with either a fiber core or a steel core.
Steel cores can be either an independent wire rope core (IWRC) or a wire strand core (WSC). The wire strand core was selected because it provides greater strength than a fiber core and a larger wire size than an independent wire rope core. For 7/8" diameter cable, both 6x7 Class and 6x19 Class wire rope can meet the ASTM A603 requirements.

Since a larger wire size is desirable for corrosion protection, the 6x7 class of cable was chosen. This class of wire rope has the largest wire size available. With the larger wire size, the life of the cable will be extended should the zinc coating wear off. Since the wire size for the 6x19 cable is near the limit of the A603 specification, cable sizes smaller than 7/8" diameter will require 6x7 class to meet the minimum wire size provisions in the A603 specification.

The 6x7 class designation for wire rope refers to a rope with 6 strands wrapped around the core. When a wire strand core is used, it is acceptable to refer this type of rope as either 6x7 class or 7x7 class (i.e., the seventh strand is the core strand).

A1.2.5 Cables and Turnbuckles - (continued)

CABLES - (continued)

The type of cable used by Caltrans is 3/4" dia. 6x19, WSC or IWRC, galvanized according to Federal Specification RR-W-410D and manufactured of improved plow steel with a minimum breaking strength of 23 tons. Bethlehem Wire Rope felt the A603 was a more appropriate specification when galvanizing is of primary concern. In some instances, it may be appropriate to allow a contractor to substitute cable meeting the Caltrans specification (i.e., RR-W-410D) when there is a small quantity (and our stockpile is depleted) and the site is not along the coast. Wood's Logging Supply [1-206-577-8030] regularly stocks 7/8" diameter 6x19, IWRC, Extra Improved Plow Steel with galvanizing. This cable has about the same breaking strength as A603 cable, but probably has substantially less galvanizing than the Class C coating.

The anticipated stockpile site is the District 2B Maintenance facility in Clackamas. The Clackamas facility has trucks designed to lift a 12' barrier section with a weight of about 3 tons. A 5000' spool of 7/8" cable has a weight of approximately 3 tons. If cable is ever stockpiled at other locations, the capacity of available lifting equipment should be researched before specifying the spool size.

The bending radii given were taken from a chart showing proper sheave and drum sizes in the Bethlehem Wire Rope General Purpose Catalog. It is not clear whether or not these values are appropriate for the seismic retrofit application. The values are given only for lack of better information. The 4" bending radius for the Caltrans 3/4" dia. cable is what CH2M proposed for the West Marquam seismic retrofit project.

TURNBUCKLES

Federal Specification FF-T-791B classifies turnbuckles by type, form, and class. Type I turnbuckles have an open turnbuckle body. Type II and type III turnbuckles have a closed (i.e, pipe) turnbuckle body. Type I should be specified so that the interior of the turnbuckle can be inspected. The form refers to the construction of the turnbuckle body. Any form is acceptable as long as the turnbuckle can develop the strength of the connecting cable. The capacities listed in Table 1 of FF-T-791B are minimum values. Manufacturers are able to make turnbuckles to higher strengths than listed in Table 1. The Designer should specify the load needed and not the size of the turnbuckle. However, the Designer should use the size determined by the stated capacities in Table 1 of FF-T-791B for checking clearance requirements. Turnbuckles are also distinguished by a class designation. The class designates the type of connection at each end of the turnbuckle. The Designer should specify the type of end by a description rather than by class. The type of ends used for seismic retrofit applications will be limited to "jaw" (also referred to as a clevis) and "eye" ends only.

Either a jam nut or lock wire should be provided at each end. Jam nuts are not allowed by the Ontario Safety Code or State Industrial Accident (Workers' Compensation Department). For most turnbuckle applications, the turnbuckle is tightened and untightened repeatedly. For seismic retrofit applications, however, the turnbuckle will require only limited future readjustment. Therefore, jam nuts will be allowed for seismic applications. Caltrans allows the use of closed (i.e., pipe) turnbuckle bodies. This type of turnbuckle cannot use lock wires. Workers' Compensation has requested (in 1984) we use lock wires for the safety cable application. No information has been found which specifies the size of lock wire required. 14 gage wire has an 0.080" diameter.

A1.2.5 Cables and Turnbuckles - (continued)

TURNBUCKLES - (continued)

The take-up length for the turnbuckle allows the cable system to be field adjusted. Federal Specification FF-T-791B lists the take-up lengths commonly available for each size of turnbuckle. The Designer should consider what minimum take-up is appropriate. Long take-up lengths will make the cable system easy to adjust in the field and will minimize the number of different cable lengths required. A 24" take-up length is recommended for most applications.

Cable socket connections are classified as either swage, wedge, or spelter. The choice of which type of socket connection to use should be left to the Contractor. Both the swage and spelter connections are able to achieve the breaking strength of the cable. Wedge connections, however, should not be allowed since they can normally achieve only 80% of the cable breaking strength. Socket connections are generally referred to as either "open" or "closed". Open (or clevis) socket connections have a "jaw" end. Closed socket connections have an "eye" end. It is also possible to have a stud (threaded bolt) connection. The stud (threaded bolt) may connect directly to one end of a turnbuckle.

Two catalogs are available in the Facilities Design Team which contains information on turnbuckles and clevises. "Crosby" has information on turnbuckles, socket connections (open and closed), and wire rope thimbles. This information includes dimensions, weights, and strengths. "Electroline" has information for clevis socket assemblies, stud assemblies, and turnbuckles. Electroline's information has only dimensions.

APPENDIX - B

GLOSSARY

Definitions

A

Abutment - Supports at the end of the bridge used to retain the approach embankment and carry the vertical and horizontal loads from the superstructure. Current terminology is bent or end bent.

Access Control - The condition where the legal right of owners or occupants of abutting land to access a highway is fully or partially controlled by the Department of Transportation.

Advance Plans – 95-100% complete plans including special provisions, normally sent at 15 weeks.

Advertisement - The period of time between the written public announcement inviting proposals for projects and the opening of the proposals (bid or letting date).

Aggregate - Inert material such as sand, gravel, broken stone, or combinations thereof.

Aggregate, Coarse - Aggregates predominantly retained on the No. 4 sieve for portland cement concrete and those predominantly retained on the 1/4" for asphalt concrete.

Aggregate, Fine - Those aggregates which entirely pass the 3/8" sieve.

Aggregate, Dense Graded - A well-graded aggregate so proportioned as to contain a relatively small percentage of voids.

Aggregate, Open Graded - A well-graded aggregate containing little or no fines, with a relatively large percentage of voids.

Aggregate, Well-Graded - An aggregate possessing proportionate distribution of successive particle sizes.

Air-Entraining Agent - A substance used in concrete to increase the amount of entrained air in the mixture. Entrained air is present in the form of minute bubbles and improves the workability and frost resistance.

Allowable Headwater - The maximum elevation to which water may be ponded upstream of a culvert or structure as specified by law or design.

Allowable Span – The greatest horizontal distance permitted between supports.

Anchor Bolts - Bolts that are embedded in concrete which are used to attach an object to the concrete such as rail posts, bearings, steel girder-to-cross beam connections, etc.

Anode - The positively charged pole of a corrosion cell at which oxidations occur.

Apron - The paved area between wingwalls at the end of a culvert.

BACK

Definitions - (continued)

Arch - A curved structure element primarily in compression, producing at its support reactions having both vertical and horizontal components.

Arch Pipe - A conduit in the form of a broad arch without a bottom.

Average Daily Traffic (ADT) - The average 24-hour volume of traffic, being the total during a stated period divided by the number of days in that period. Unless otherwise stated, the period is a year.

Axle Load - The load borne by one axle of a traffic vehicle.

Award - Written notification to the bidder that the bidder has been awarded a contract.

B

Backfill - Material used to replace or the act of replacing material removed during construction; also may denote material placed or the act of placing material adjacent to structures.

Backwater - The water upstream from an obstruction in which the free surface is elevation above the normal water surface profile.

Bar Chair - A device used to support horizontal reinforcing bars above the base of the form before the concrete is poured.

Bar Cutting Diagram - A diagram used in the detailing of bar steel reinforcement where the bar lengths vary as a straight line.

Base Course - The layer of specified material of designed thickness placed on a subbase or a subgrade to support a surface course.

Bascule Bridge - A bridge over a waterway with one or two leaves which rotate from a horizontal to a near-vertical position, providing unlimited clear headway.

Base Flood - Flood having 1% chance of being exceeded in any given year.

Battered Pile - A pile driven in an inclined position to resist horizontal forces as well as vertical forces.

Beam - Main longitudinal load carrying member in a structure, designed to span from one support to another (girder).

Bearings - Device to transfer girder reactions without overstressing the supports.

Bearing Capacity - The load per unit area which a structural material, rock, or soil can safely carry.

Bearing Failure - A crushing of material under extreme compressive load.

Bearing Seat - A prepared horizontal surface at or near the top of a substructure unit upon which the bearings are placed.

Definitions - (continued)

Bearing Stiffener - A stiffener used at points of support on a steel beam to transmit the load from the top of the beam to the support point.

Bedrock - The solid rock underlying soils or other superficial formation.

Bench Mark - A relatively permanent material object bearing a marked point whose elevation above or below an adopted datum is known.

Bent - Supports at the ends or intermediate points of a bridge used to retain approach embankments and/or vertical and horizontal loads from the superstructure.

Bicycle Lane - A lane in the traveled way designated for use by bicyclists.

Bicycle Path - A public way physically separated from the roadway, that is designated for use by bicyclists.

Bid Schedule - The list of bid items, their units of measurement, and estimated quantities, bound in the proposal booklet. (When a contract is awarded, the Bid Schedule becomes the Schedule of Contract Prices.)

Bidder - Any qualified individual or legal entity submitting a proposal in response to an advertisement.

Biennium - For the State of Oregon, a two-year period, always odd numbered years, starting July 1 and ending two years later on June 30.

Bleeding (Concrete) - The movement of mixing water to the surface of freshly placed concrete.

Blind Copy (bc) - Copy of correspondence that goes internally to office personnel or file. Is not typed on the original, but is typed on yellow copy.

Bowstring Truss - A general term applied to a truss of any type having a polygonal arrangement of its top chord members conforming to or nearly conforming to the arrangement required for a parabolic truss.

Box Beam - A hollow structural beam with a square, rectangular, or trapezoidal cross-section.

Box Culvert - A culvert of rectangular or square cross-section.

Breakaway - A design feature that allows a device such as a sign, luminaire, or traffic signal support to yield or separate upon impact. The release mechanism may be a slip plane, plastic hinges, fracture elements, or a combination of these.

Bridge - A structure spanning and providing passage over a river, chasm, road, or the like, having a length of 20 feet or more from face to face of abutments or end bents, measured along the roadway centerline.

Bridge Approach - Includes the embankment materials and surface pavements that provide the transition between bridges and roadways.

Bridge End Panel - A reinforced concrete slab placed on the approach embankment adjacent to and usually resting upon the abutment back wall; the function of the approach slab is to carry wheel loads on the approaches directly to the abutment, thereby eliminating any approach roadway misalignment due to approach embankment settlement.

Definitions - (continued)

Bridging - A carpentry term applied to the cross-bracing fastened between timber beams to increase the rigidity of the floor construction, distribute more uniformly the live load and minimize the effects of impact and vibration.

Bridge Railing - A longitudinal barrier whose primary function is to prevent an errant vehicle from going over the side of the bridge structure.

Brush Curb - A curb 10" or less in width, which prevents a vehicle from brushing against the railing or parapet.

Buckle - To fail by an inelastic change in alignment as a result of compression.

Built-Up Member - A column or beam composed of plates and angles or other structural shapes united by bolting, riveting or welding.

Bulkhead – A partition built into wall forms to terminate each placement of concrete.

Buoyancy - Upward force exerted by the fluid in which an object is immersed.

Bushings - A lining used to reduce friction and/or insulate mating surfaces usually on steel hanger plate bearings.

Butt Splice - A splice where the ends of two adjoining pieces of metal in the same plane are fastened together by welding.

Butt Weld - A weld joining two abutting surfaces by combining weld metal and base metal within an intervening space.

C

Cable-Stayed Bridge - A bridge in which the superstructure is directly supported by cables, or stays, passing over or attached to towers located at the main piers.

CADD - Computer-Aided Design and Drafting.

Caisson - A watertight box of wood or steel sheeting; or a cylinder of steel and concrete, used for the purpose of making an excavation. Caissons may be either open (open to free air) or pneumatic (under compressed air).

Camber - A predetermined vertical curvature built into a structural member, to allow for deflection and/or vertical grade.

Cast-in-Place - The act of placing and curing concrete within formwork to construct a concrete element in its final position.

Definitions - (continued)

Catch Basin - A receptacle, commonly box shaped and fitted with a grilled inlet and a pipe outlet drain, designed to collect the rain water and floating debris from the roadway surface and retain the solid material so that it may be periodically removed.

Catenary - The curve obtained by suspending a uniform rope or cable between two points.

Cathode - The negatively charged pole of a corrosion cell that accepts electrons and does not corrode.

Cathodic Protection - A means of preventing metal from corroding; this is done by making the metal a cathode through the use of impressed direct current and by attaching a sacrificial anode.

Catwalk - A narrow walkway to provide access to some part of a structure.

Chain Drag - A series of short medium weight chains attached to a T-shaped handle; used as a preliminary technique for inspecting a large deck area for delamination.

Chamfer – A beveled edge formed in concrete by a triangular strip of wood (chamfer strip) placed in a form corner.

Change Order - A written order issued by the Engineer to the Contractor modifying work required by the contract and establishing the basis of payment for the modified work.

Chord - A generally horizontal member of a truss.

Clay - Soil passing a No. 200 sieve that can be made to exhibit plasticity (putty-like properties) within a range of water contents.

Clear Zone - Roadside border area, starting at the edge of the traveled way, that is available for safe use by errant vehicles. Establishing a minimum width clear zone implies that rigid objects and certain other hazards with clearances less than the minimum width should be removed and relocated outside the minimum clear zone, or remodeled to make breakaway, shielded, or safely traversable.

Closed Spandrel Arch - A stone or reinforced concrete arch span having spandrel walls to retain the spandrel fill or to support either entirely or in part the floor system of the structure when the spandrel is not filled.

Cobbles - Particles of rock, rounded or not, that will pass a 12” square opening and be retained on a 3” sieve.

Cofferdam - A barrier built in the water so as to form an enclosure from which the water is pumped to permit free access to the area within.

Cohesionless Soil - A soil that when unconfined has little or no strength when air-dried and that has little or no cohesion when submerged.

Cohesive Soil - A soil that when unconfined has considerable strength when air-dried and that has significant cohesion when submerged. Clay is a cohesive soil.

Commission - The Oregon Transportation Commission.

Definitions - (continued)

Composite Section - Two sections made of the same or different materials together to act as one integral section; such as a concrete slab on a steel or prestressed girder.

Compression Seals - A preformed, compartmented, elastomeric (neoprene) device, which is capable of constantly maintaining a compressive force against the joint interfaces in which it is inserted.

Concept Plans – plans to determine the basic features of a project including alignments, typical sections, slopes, preliminary drainage and TS&L bridge plans.

Concrete Overlay – 1.5" to 2" of concrete placed on top of the deck, used to extend the life of the deck and provide a good riding surface.

Contract - The written agreement between the Division and the Contractor describing the work to be done and defining the obligations of the Division and the Contractor.

Contract Plans - Detailed drawings and diagrams usually made to scale showing the structure or arrangement, worked out beforehand, to accomplish the construction of a project and/or object(s).

Contract Time - The number of calendar days shown in the proposal which is allowed for completion of the work.

Contraction Joint - A joint in concrete that does not provide for expansion but allows for contraction or shrinkage by the opening up of a crack or joint.

Contractor - The individual or legal entity that has entered into a contract with the Division.

Coordinates - Linear or angular dimensions designating the position of a point in relation to a given reference frame. It normally refers to the State Plane Coordinate System.

Core - A cylindrical sample of concrete removed from a bridge component for the purpose of destructive testing.

Counterfort Wall - A reinforced concrete retaining wall whose vertical stem has triangular-shaped ribs projecting into the soil and spaced at regular intervals to provide strength and stability.

Crash Cushion - An impact attenuator device that prevents an errant vehicle from impacting fixed object hazards by gradually decelerating the vehicle to a safe stop or by redirecting the vehicle away from the hazard.

Crash Tests - Vehicular impact tests by which the structural and safety performance of roadside barriers and other highway appurtenances may be determined. Three evaluation criteria are considered, namely (1) structural adequacy, (2) impact severity, and (3) vehicular post-impact trajectory.

Creep - Time dependent inelastic deformation under elastic loading of concrete or steel resulting solely from the presence of stress.

Cross Bracing - Bracing used between stringers and girders to hold them in place and stiffen the structure.

Definitions - (continued)

Cross Section - The exact image formed by a plane cutting through an object usually at right angles to a central axis.

Crown Section - Roadway section with the height of the center of the roadway surface above its gutters.

Culvert - Federal Highway Administration definition: "A structure not classified as a bridge having a span of 20 feet or less spanning a watercourse or other opening on a public highway"; a conduit to convey water through an embankment.

Curb - A vertical or sloping member along the edge of a pavement or shoulder forming part of a gutter, strengthening or protecting the edge, and clearly defining the edge of vehicle operators. A curb is a horizontal offset varying from 10" to less than 18". The surface of the curb facing the general direction of the pavement is called the "face".

Curing - The preparation of a material by chemical or physical processing for keeping or use; treating concrete by covering its surface with some material to prevent the rapid evaporation of water.

Cut-Off-Wall - A wall built at the end of a culvert apron to prevent the undermining of the apron.

D

Dead End - End of post-tensioned bridge where tendons are anchored but no jacking takes place (opposite of jacking end).

Dead Load - Structure weight including future wearing surface on deck and attachments.

Deadman - A concrete mass, buried in the earth behind a structure, that is used as an anchor for a rod or cable to resist horizontal forces that act on the structure.

Deformed Bars - Concrete reinforcement consisting of steel bars with projections or indentations to increase the mechanical bond between the steel and concrete.

Delamination - Subsurface separation of concrete into layers.

Department - The Department of Transportation of the State of Oregon.

Design Volume or Design Hourly Volume - A volume determined for use in design representing traffic expected to use the highway. Unless otherwise stated, it is an hourly volume.

Diaphragm - Structural: A structural member used to tie adjoining girders together and stiffen them in a lateral direction as well as to distribute loads.

Diamond Grinding - Process to abrade or remove a surface, such as concrete, by the cutting action of rotating circular blade with diamond-tipped teeth.

Direct Tension Indicator - Load-indicating washer for bolts.

Definitions - (continued)

Doby - A precast block of concrete of various sizes used to support or provide clearances between reinforcing bars and formwork.

Dolphins - A group of piles or sheet piling driven adjacent to a pier. Their purpose is to prevent extensive damage or possible collapse of a pier from a collision with a ship or barge.

Draped Strands - Strand pattern for prestressing strands, where strands are draped to decrease the prestressing stress at the ends of the girder where the applied moments are small.

Drift Pin - A metal pin, tapered at both ends, used to draw members of a steel structure together by being driven through the corresponding bolt holes.

Drip Groove - A groove formed into the underside of a projecting concrete sill or coping to prevent water from following around the projection.

E

E - modulus of elasticity of a material; the stiffness of a material.

E&C - Engineering costs are ODOT's costs to administer the construction contract. Contingencies are unforeseen costs due to construction extra work price agreements or types of problems caused by weather, accidents, etc. by the contract pay item.

Elastomeric Bearing Pads - Pads ½" and less in thickness made of all rubber-like material that supports girders and concrete slabs; pads over ½" in thickness consist of alternate laminations of elastomer and metal.

End-Bearing Pile - A pile which provides support primarily due to reaction at its tip.

Environmental Classes - Class I Environmental Impact Statement: Projects that normally involve significant changes in traffic capacities and patterns. These projects generally involve major right-of-way acquisitions. Both draft and final Environmental Impact Statements are required.

Class II Categorical Exclusions: Projects that normally involve the improvement of pavement conditions on traffic safety, but little, if any, change in traffic capacities or patterns. Right-of-way requirements must be minor. These projects are categorically excluded from further environmental documentation, unless permit requirements indicate otherwise.

Class III Environmental Assessment: Projects that do not clearly fall within Class I or Class II. These projects require assessments to determine their environmental significance.

Epoxy - A synthetic resin which cures or hardens by chemical reaction between components which are mixed together shortly before use.

Epoxy Coated Rebar - Steel reinforcement coated with a powdered epoxy resin, to prevent corrosion of the bar steel.

Definitions - (continued)

Expansion Bearings - Bearings that allow longitudinal movement of the superstructure relative to the substructure and rotation of the superstructure relative to the substructure.

Expansion Device - A device placed at expansion points in bridge superstructures to carry the vertical bridge loads without preventing longitudinal movement.

Expansion Joint - A joint in concrete that allows expansion due to temperature changes, thereby preventing damage to the structure.

Extra Work - Work not included in any of the contract items as awarded but determined by the Engineer necessary to complete the project according to the intent of the contract. This may be paid on a negotiated price, force account, or established price basis.

Extrados - The curved edge of an arch rib or barrel formed by the intersection of the top and side arch surfaces.

F

Falsework - In general, a temporary construction work on which a main or permanent work is wholly or partially supported until it becomes self-supporting. For cast-in-place concrete or steel construction, it is a structural system to support the vertical and horizontal loads from forms, reinforcing steel, plastic concrete, structural steel, and placement operations.

Fatigue - The tendency of a member to fail at a lower stress when subjected to cyclical loading that when subjected to static loading.

Fatigue Crack - Any crack caused by repeated cyclic loading.

Federal-Aid System of Highways - The national system of interstate highways, Federal-aid highway system, system of secondary and feeder roads, Federal-aid grade crossing projects, federal forest highway systems and projects and other highway and related projects, all within the meaning of the Federal-Aid Road Act (1916), and all acts amendatory thereof and supplementary thereto, and the federal regulations issued under such acts.

Fender - A structure that acts as a buffer to protect the portions of a bridge exposed to floating debris and water-borne traffic from collision damage.

Fiscal Year - For the State of Oregon, July 1 through June 30 of the next year; for the Federal government, October 1 through September 30 of the next year. The Federal fiscal year (FY) is broken into quarters:

- **1** F1Q (October, November, December)
- **1** F2Q (January, February, March)
- 1 F3Q (April, May, June)
- 1 F4Q (July, August, September)

Felloe Guard - Timber curb, usually 10” x 12”, bolted to timber deck and timber rail post. Sometimes called wheel guard.

Filler Plate - A steel plate or shim used for filling in space between compression members.

Definitions - (continued)

Fixed Bearings - Bearings that do not provide for any longitudinal movement of the superstructure relative to the substructure, but allows for rotation of the superstructure relative to the substructure.

Flat Slab - A reinforced concrete superstructure that has a uniform depth throughout.

Flood Plain - An area that would be inundated by a flood.

Floodway - A stream channel plus any adjacent flood plain areas that must be kept free of encroachment so that the 100-year flood can be conveyed without substantial increases in flood heights.

Floor Beam - A transverse structural member that extends from truss to truss or from girder to girder across the bridge.

Flux - A material that protects the weld from oxidation during the fusion process.

Force Account Work - Items of extra work ordered by the Engineer that are to be paid for by material, equipment, and labor.

Forms - A structural system constructed of wood or metal used to contain the horizontal pressures exerted by plastic concrete and retain it in its desired shape until it has hardened.

Fracture Critical Members - Members of a bridge where a single fracture in a member can lead to collapse.

Fracture Mechanics - Study of crack growth in materials.

Friction Pile - A pile that provides support through friction resistance along the surface area of the pile.

Front Office - Room 301, Bridge Section Administrative Office.

Functionally Obsolete Bridges - Those bridges which have deck geometry, load carrying capacity (comparison of the original design load to the current state legal load), clearance, or approach roadway alignment which no longer meet the usual criteria for the system of which they are a part as defined by the Federal Highway Administration.

G

Gabions - Rock-filled wire baskets used to retain earth and provide erosion control.

Galvanic Action - Electrical current between two unlike metals.

Galvanize - To coat with zinc.

Geotextiles - Sheets of woven or non-woven synthetic polymers or nylon used for drainage and soil stabilization.

Girder - Main longitudinal load carrying member in a structure (beam).

Glare Screen - A device used to shield a driver's eye from the headlights of an oncoming vehicle.

Definitions - (continued)

Grade Separation - A crossing of two highways or a highway and a railroad at different levels.

Gravity Wall - A retaining wall that is prevented from overturning by its weight alone.

Green Concrete - Concrete that has set but not appreciably hardened.

Grid Flooring - A steel floor system comprising a lattice pattern which may or may not be filled with concrete.

Grout - A mixture of cementitious material and water having a sufficient water content to render it a free-flowing mass, used for filling (grouting) the joints in masonry, for fixing anchor bolts and for filling post-tensioning ducts.

H

Hammerhead Pier - A pier that has only one column with a cantilever cap and is somewhat similar to the shape of a hammer.

Hanger Plate - A steel plate that connects the pins at hinge points thus transmitting the load through the hinge.

Haunch - An increase in depth of a structural member usually at points of intermediate support.

Haunched Slab - A reinforced concrete superstructure that is haunched (has an increased depth) at the intermediate supports.

Headwall - A concrete structure at the ends of a culvert to retain and protect the embankment slopes, anchor the culvert, and prevent undercutting.

High Performance Concrete (HPC) – Concrete with enhanced properties including higher strength, greater durability and decreased permeability.

High Performance Steel (HPS) - Steel with enhanced properties including increased durability and weldability.

Hinge - A device used to hold the ends of two adjoining girders together, but does not allow for longitudinal movement of the superstructure. A point in a structure where a member is free to rotate.

Holddown Device - A device used on bridge abutments to prevent girders from lifting off their bearings as a result of the passage of live load over the bridge.

Honeycomb - A surface or interior defect in a concrete mass characterized by the lack of mortar between the coarse aggregate particles.

Definitions - (continued)

Howe truss - A truss of the parallel chord type with a web system composed of vertical (tension) rods at the panel points with an X pattern of diagonals.

Hydration - The process by which cement combines with water to form a hard binding substance.

Hybrid Girder - A steel plate girder with the web steel having a lower yield strength than the steel in one or both flanges.

Hydrodemolition - Process to abrade or remove a surface, such as concrete, by streams of water ejected from a nozzle at high velocity.

I

Incidental Work - Work necessary for fulfillment of the contract but which is not listed as a pay item in the contract and for which no separate or additional payment will be made.

Initial Set (Concrete) - Initial stiffening of concrete, with time based upon penetration of a weighted test needle. In the field, it is commonly assumed to be the time when the dead weight of vibrator does not penetrate into the concrete.

Inlet Control - The case where the discharge capacity of a culvert is controlled at the culvert entrance by the depth of headwater and the entrance geometry, including barrel shape, cross sectional area, and inlet edge.

Intermediate Stiffener - A vertical transverse steel member used to stiffen the webs of plate girders between points of support.

Internal File Number - Number assigned by the Bridge Front Office as part of office automation (computerized files) and used to track all files.

Invert - The bottom or lowest point of the internal surface of the transverse cross section of a pipe.

Inventory Rating (Design Load) - Load level that produces normal design stresses in the structures. The inventory rated load is the load that can safely utilize an existing structure for an indefinite period of time.

International System of Units (SI) - The modernized metric system.

Intrados - The curved edge of an arch rib or barrel formed by the intersection of the bottom and side arch surfaces.

Isotropic - Have the same material properties in all directions, e.g., steel.

J

Jacking End - End of post-tensioned bridge where jacking takes place (opposite of dead end).

Jetting - Forcing water into holes in an embankment to settle or to compact the earth. Forcing water through holes in piles to install the piles to a specified depth before driving.

BACK

Definitions - (continued)

K

Key Number - Number assigned to a project by Program Section to identify it in the Project Control System (PCS). All structures in a project have the same key number.

Kilogram (kg) - The base unit for mass in the International System of Units (metric).

King Post Truss - Two triangular panels with a common center vertical; the simplest of triangular trusses.

L

Lacing - Small flat plates used to connect individual sections of built up members.

Laitance - A weak mortar that collects at the surface of freshly placed concrete, usually caused by an excess of mixing water or by excessive finishing.

Lamellar Tear - Incipient cracking between the layers of the base material (steel).

Lateral Bracing - Bracing placed in a horizontal plane between steel girders near the bottom and/or top flanges.

Latex Modified Concrete (LMC) - Emulsion of synthetic rubber or plastic obtained by polymerization used as a concrete additive to decrease permeability.

Leaf - The movable portion of a bascule bridge which forms the span of the structure.

Lenticular Truss - A truss having parabolic top and bottom chords curved in opposite directions with their ends meeting at a common joint; also known as a fish belly truss.

Level of Performance - The degree to which a longitudinal barrier, including bridge railing, is designed for containment and redirection of different types of vehicles.

Liquid Penetrant Inspection - Nondestructive inspection process for testing for continuities that are open to the surface, by using a liquid dye.

Live Load - Force of the applied moving load of vehicles and/or pedestrians.

Load Rating - Evaluation of the safe live load capacity of the weakest member of a bridge.

LRFD - Load Resistance Factor Design.

Longitudinal Stiffener - A longitudinal steel plate (parallel to girder flanges) used to stiffen the webs of welded plate girders. Normally thicker webs are used to eliminate longitudinal stiffeners.

Low Relaxation Strands - Prestressing tendons that are manufactured by subjecting the strands to heat treatment and tensioning causing a permanent elongation. This increases the strand yield strength and reduces strand relaxation under constant tensile stress.

Definitions - (continued)

M

Magnetic Particle Inspection (MT) - Nondestructive inspection process for testing for the location of surface cracks or surface discontinuities, by applying dry magnetic particles to a weld area or surface area that has been suitably magnetized.

Microsilica (Silica Fume) (MC) - Very fine non-crystalline silica used as an admixture in concrete to improve the strength, permeability and abrasion resistance.

Minor Structure Concrete (MSC) - Nonstructural concrete furnished according to contractor proportioning, placed in minor structures and finished as specified. Previously called commercial concrete.

Modular Expansion Joints - Multiple, watertight joint assemblies for bridges requiring expansion movements greater than 4 inches.

Mud Sill - A timber platform laid on earth as a support for vertical members or bridge falsework.

Mylars - Full-size drawings on mylar. The final "legal" drawing used for signatures and printing contract plans.

N

NDT - Nondestructive testing, a method of checking the structural quality of materials that does not damage them.

Negative Moment - The moment causing tension in the top fibers and compression in the bottom fibers of a structural member.

Negative Reinforcement - Reinforcement placed in concrete to resist negative bending moments.

Newton (N) - The derived unit for force (mass times acceleration or kg times m/s^2) in the International System of Units (metric).

Nominal - Used to designate a theoretical dimension, size, or slope that may vary from the actual by a very small or negligible amount. Example: a 1" nominal diameter steel pipe has an actual 0.957" inside diameter.

Nominal Pile Resistance – LRFD term for the maximum axial pile bearing resistance. Equivalent to the ultimate pile capacity term used in allowable stress design.

Non-Redundant Structure - Type of structure with single load path, where a single fracture in a member can lead to the collapse of the structure.

Nosing – A bulkhead at the ends of bridges or at expansion joints made of a durable material to protect and reinforce the slab edge. It also provides a smooth edge or surface at expansion joints to facilitate installation and provide a better seal.

Definitions - (continued)

O

Operating Rating (Permit Loads) - The absolute maximum permissible stress level to which a structure may be subjected. It is that stress level that may not be exceeded by the heaviest loads allowed on the structure. Special permits for heavier than normal vehicles shall be issued only if such loads are distributed so as not to produce stress in excess of the operating stress.

Outlet Control - The case where the discharge capacity of a culvert is controlled by the elevation of the tail water in the outlet channel and the slope, roughness, and length of the culvert barrel, in addition to the cross-sectional area and inlet geometry.

Orthotropic - A description of the physical properties of a material that has pronounced differences in two or more directions at right angles to each other.

P

Parapet - A low concrete rail designed and placed to prevent traffic from passing over the edge of a bridge deck or end of box culvert.

Pascal (Pa) - The derived unit for pressure or stress ($Pa=N/m^2$) in the International System of Units (metric).

Paving Dam – (see Nosing) - – A bulkhead at the ends of bridges or at expansion joints made of a durable material to protect and reinforce the slab edge and provide a stopping place for the wearing surface.

Paving Ledge – A ledge or corbel attached to the end beam of a bridge, to provide support for a current or future end panel.

Performance Level - See Level of Performance.

Pier - Intermediate substructure unit of a bridge. Current terminology is bent.

Pile - A long, slender piece of wood, concrete, or metal to be driven, jetted, or cast-in-place into the earth or river bed to serve as a support or protection.

Pile Bent - A pier where the piles are extended to the pier cap to support the structure.

Pile Cap - A member, usually of reinforced concrete, covering the tops of a group of piles for the purpose of tying them together and transmitting to them as a group the load of the structure that they support.

Pipe Arch - A conduit in the form of a broad arch with a slightly curved integral bottom.

Plastic Deformation - Deformation of material beyond the elastic range.

Positive Moment - In a girder the moment causing compression in the top flange and tension in the bottom flange.

Post-Tensioning - Method of prestressing in which the tendon is tensioned after the concrete has cured.

Definitions - (continued)

Pot Bearing - A bearing type that allows for multi-directional rotation by using a neoprene or spherical bearing element.

Prestress Camber - The deflection in prestressed girders (usually upward) due to the application of the prestressing force.

Pratt Truss - A truss with parallel chords and a web system composed of vertical posts with diagonal ties inclined outward and upward from the bottom chord panel points toward the ends of the truss; also known as N-truss.

Preliminary Plans – 85-90% complete plans, normally sent at 20 weeks.

Prestressed Concrete - Concrete in which there have been introduced internal stresses (normally pretensioned steel) of such magnitude and distribution that the stresses resulting from given external loadings are counteracted to a desired degree

Pretensioned - Any method of prestressing in which the strands are tensioned before the concrete is placed.

Project Manager - The Engineer's representative who directly supervises the engineering and administration of a contract.

Proposal - A written offer by a bidder on forms furnished by the Division to do stated work at the prices quoted.

PS&E - Literally, plans, specifications, and estimates. Usually it refers to the time when the plans, specifications, and estimates on a project have been completed and referred to FHWA for approval. When the PS&E has been approved, the project goes from the preliminary engineering phase to the construction phase.

Pumping - The ejection of mixtures of water, clay and/or silt along or through transverse or longitudinal joints, crack or payment edges, due to vertical movements of the roadway slab under traffic.

Q

Queen-post Truss - A parallel chord type of truss having three panels with the top chord occupying only the length of the center panel; unless center panel diagonals are provided, it is a trussed beam.

R

Radiographic Inspection - Nondestructive inspection process where gamma rays or X rays pass through the object and cast an image of the internal structure onto a sheet of film as the result of density changes.

RATS Team - ODOT Region and Technical Services Team.

Redundant Structure - Type of structure with multiple-load paths where a fracture in a single member cannot lead to the collapse of the structure.

Definitions - (continued)

Reflection Crack - A crack appearing in a resurfacing or overlay caused by movement at joints or cracks in the underlying base or surface.

Reinforced Pile Tip - Metal reinforcement fastened to the pile tip to protect it during driving.

Residual Camber - Camber due to the prestressing force minus the dead load deflection of the girder.

Right of Way - Land, property, or property interest, usually in a strip, acquired for or devoted to transportation purposes.

Riprap - A facing of stone used to prevent erosion. It is usually dumped into place, but is occasionally placed by hand.

Roadside Barrier - A longitudinal barrier used to shield roadside obstacles or non-traversable terrain features. It may occasionally be used to protect pedestrians from vehicle traffic.

Roadway - The portion of a highway, including shoulders, for vehicular use.

Rubble - Irregularly shaped pieces of varying size stone in the undressed condition obtained from a quarry.

S

Sacrificial Anode - The anode in a cathodic protection system.

Sand - Particles of rock that will pass a No. 4 sieve and be retained on a No. 200 sieve.

Scaffolding - Temporary elevated walkway or platform to support workmen, materials and tools.

Scarify - To loosen, break up, tear up, and partially pulverize the surface of soil, or of a road.

Scour - Erosion of a river bed area caused by water flow.

Scour Protection - Protection of submerged material by steel sheet piling, riprap, mattress, or combination of such methods.

Screeding - The process of striking off excess material to bring the top surface to proper contour and elevation.

Seal - A concrete mass (usually not reinforced) poured under water in a cofferdam that is designed to resist hydrostatic uplift. The seal facilitates construction of the footing in dry conditions.

Shear Connector - A connector used to joint cast-in-place concrete to a steel section and to resist the shear at the connection.

Shear Lag - Nonuniform stress pattern due to ineffective transmission of shear.

Shed Roof - Roadway section with the height of one gutter greater than the centerline and other gutter.

Definitions - (continued)

Sheet Pile - A pile made of flat or arch cross section to be driven into the ground or stream bed and meshed or interlocked with like members to form a wall, or bulkhead.

Sheet Pile Cofferdam - A wall-like barrier composed of driven piling constructed to surround the area to be occupied by a structure and permit dewatering of the enclosure so that the excavation may be produced in the open air.

Shoofly - Detour alignment of temporary railroad track and bridge around the site of a permanent railroad bridge replacement.

Shotcrete - Mortar or concrete pneumatically projected at high velocity onto a surface.

Shoulders - The portions of the roadway between the traveled way and the inside edges of slopes of ditches or fills, exclusive of auxiliary lanes, curbs, and gutters.

Shy Distance (E-Distance) - The distance from the edge of the traveled way beyond which a roadside object will not be perceived as an immediate hazard by the typical driver, to the extent that the vehicle's placement or speed will be changed.

Shrinkage - Contraction of concrete due to drying and chemical changes, dependent on time.

Silt - Soil passing a No. 200 sieve that is non-plastic or exhibits very low plasticity.

Simple Spans - Spans with the main stress carrying members non-continuous, or broken, at the intermediate supports.

Skew or Skew Angle - The acute angle formed by the intersection of a line normal to the centerline of the roadway with a line parallel to the face of the abutments or piers, or in the case of culverts with the centerline of the culverts. Left hand forward skew indicates that, look up station, the left side of the structure is further up station that the right hand side. Right hand skew indicates that the right side of structure is further up station that the left side.

Slip Base - A structural element at or near the bottom of a post or pole that will allow release of the post from its base upon impact while resisting wind loads.

Slope - The degree of inclination to the horizontal. It is sometimes described by such adjectives as steep, moderate, gentle, mild or flat.

Slope Paving - Pavement placed on the slope in front of abutment to prevent soil erosion.

Soffit - The bottom surface of a beam or an arch rib or barrel.

Spandrel - The area between the roadway and the arch in the side view of an arch bridge.

Definitions - (continued)

Special Provisions - The special directions, provisions, and requirements peculiar to the project that augment the standard specifications. They are commonly referred to as "specials".

Specifications - The body of directions, provisions, and requirements, together with written agreements and all documents of any description, made or to be made, pertaining to the method or manner of performing the work, the quantities, and the quality of materials to be furnished under the contract.

Spread Footing - A footing that is supported directly by soil or rock.

Spur Dike - A wall or mound built or extended out from the upstream side of an abutment used for training the stream flow to prevent erosion of stream bank. May also be used where there is no bridge, but the stream flows along the side of highway embankment.

Stainless Steel Teflon Bearings - Incorporated stainless steel and teflon with steel to provide the necessary expansion movement.

St. Venant Torsion - Uniform torsion resulting in no deformation of the cross section.

State Plane Coordinates - The plane-rectangular coordinate system established by the United States Coast and Geodetic Survey. Plane coordinates are used to locate geographic position.

Station - A distance of 100 feet measured horizontally.

Stirrup - Vertical U-shaped or rectangular shaped bars placed in concrete beams to resist the shearing stresses in the beam.

Stress Relieved Strands - Any prestressing tendons that are manufactured by relieving the high residual stresses that were introduced into the steel during the wire drawing and stranding operations. Stress relieving is not a heat treatment and does not change the strand yield strength.

Strip Seal Joint - Molded neoprene glands inserted and mechanically locked between armored interfaces of extruded steel sections.

Structurally Deficient Bridges - Those bridges which have been (1) restricted to light vehicles only, (2) closed, or (3) require immediate rehabilitation to remain open, as defined by the Federal Highway Administration.

Subgrade - The top surface of completed earthwork on which subbase, base, surfacing, pavement, or a course of other material is to be placed.

Substructure - Those parts of a structure which support the superstructure, including bents, piers, abutments, and integrally built wingwalls, up to the surfaces on which bearing devices rest. Substructure also includes portions above bearing surfaces when those portions are built integrally with a substructure unit (e.g. backwalls of abutments). When substructure and superstructure elements are built integrally, the division between substructure and superstructure is considered to be at the bottom soffit of the longitudinal or transverse beam, whichever is lower. Culverts and rigid frames are considered to be entirely substructure.

Definitions - (continued)

Sufficiency Rating - A method of evaluating data by calculating four separate factors to obtain a numeric value which is indicative of bridge sufficiency to remain in service. The result of this method is a percentage in which 100 percent would represent an entirely sufficient bridge and zero percent would represent an entirely insufficient or deficient bridge.

Superelevation - The difference in elevation between the inside and outside edges of a roadway in a horizontal curve; required to counteract the effects of
centrifugal force.

Superplasticizer - A high range water-reducing admixture that increases the slump of freshly mixed concrete without increasing the water content.

Superstructure - Those parts of a structure above the substructure, including bearing devices.

Surcharge - Any load that causes thrust on a retaining wall, other than backfill to the level of the top of the wall. Also preloading of an embankment to minimize the time for initial consolidation of the subsurface soils.

Suspension Bridge - A bridge in which the floor system is supported by catenary cables which are supported upon towers and are anchored at their extreme ends.

Suspender - A wire cable, metal rod or bar connected to a catenary cable of a suspension bridge at one end and the bridge floor system at the other, thus transferring loads from the roadway to the main suspension members.

T

Tack Welds - Small welds used for temporary connections.

Telltale (Tattletale) - Any device designed to indicate movement of formwork or falsework.

Tendon - A name for prestressed reinforcing element whether wires, bars, or strands.

Tenon - A constant diameter extension welded to the tip of the tapered metal arm of a luminaire support pole to receive the luminaire.

Thixotropy - Property of a material that enables it to stiffen in a short period on standing, but to acquire a lower viscosity again on mechanical agitation. A property desirable for post-tensioning duct grout.

Three-Dimensional Finite Element Analysis - Analysis in which a three-dimensional continuum is modeled as an assemblage of discrete elements in three-dimensional space.

Three-Hinged Arch - An arch which is hinged at each support and at the crown.

Through Structure - A structure that has its floor connected to the lower portion of the main stress-carrying members, so that the bracing goes over the traffic. A structure whose main supporting members project above the deck or surface.

Tining - Is used on finished concrete deck or slab surfaces to provide friction and reduce hydroplaning. Grooves are placed in the plastic concrete or cut into the hardened concrete.

Definitions - (continued)

Torsional Stress - Shear stress on a transverse cross section resulting from a twisting action.

Transformed Section - A hypothetical section of one material so as to have the same elastic properties as a section of two materials.

Transition - A section of barrier between two different barriers or, more commonly, where a roadside barrier is connected to a bridge railing or to a rigid object such as a bridge pier. The transition should produce a gradual stiffening of the approach rail so vehicular pocketing, snagging, or penetration at the connection can be avoided.

Traveled Way - The portion of the roadway for the movement of vehicles, exclusive of shoulders and auxiliary lanes.

Tremie - A pipe or tube through which concrete is deposited underwater.

Trial Batch - A batch of concrete prepared to establish or check proportions of the constituents.

Turnbuckle - A long, cylindrical, internally threaded nut used to connect the elements of adjustable rod and bar members.

Turn-of-the-Nut - A bolt-tightening method.

Two-hinged Arch - A rigid frame which may be arch-shaped or rectangular but is hinged at both supports.

U

Ultrasonic Inspection - A non-destructive inspection process where by an ultra-high frequency sound wave induced into a material is picked up in reflection from any interface or boundary.

Unbonded Strands - Strands so coated as to prevent their forming a bond with surrounding concrete. Used to reduce stress at the ends of a member.

Underpinning - The addition of new permanent support to existing foundations to provide additional capacity.

Uplift - A force tending to raise a structure or part of a structure and usually caused by wind and/or eccentric loads, or the passage of live-load over the structure.

Utility - A line, facility, or system for producing, transmitting, or distributing communications, power, electricity, heat, gas, oil, water, steam, waste, storm water not connected with highway drainage, or any other similar commodity which directly or indirectly serves the public. The term utility shall also mean the utility company, district, or cooperative, including any wholly owned or controlled subsidiary.

Definitions - (continued)

V

Vierendeel Truss - A Pratt truss without diagonal members and with rigid joints between top and bottom chords and the verticals.

Vibrator - An oscillating device inserted at selected locations to consolidate fresh concrete.

W

Wales - Horizontal support members in close contact with a row of sheet piles in a cofferdam or shoring wall. Sometimes called whalers.

Warrants - The criteria by which the need for a safety treatment or improvement can be determined.

Warren Truss - A triangular truss consisting of sloping members between the top and bottom chords and no verticals; members form the letter W.

Water/Cement Ratio - The weight of water divided by the weight of cement in a concrete; ratio controls the strength of the concrete.

Waterproofing Membranes - Impervious material overlaid with bituminous concrete to protect decks from the infiltration of chlorides and resulting deterioration.

Wearing Surface - The top layer of a pavement designed to provide structural values and a surface resistant to traffic abrasion.

Weep Hole - A drain hole through a wall to prevent the building up of hydraulic pressure behind the wall.

Weld Inspection - Covers the process, written procedure, and welding in process. Post weld heat maintenance if required, post weld visual inspection and non-destructive testing as specified in contract and Standard Specifications.

Welded-Wire Fabric - A two-way reinforcing mat, fabricated from cold-drawn steel wire, having parallel longitudinal wires welded at regular intervals to parallel transverse wires.

Well-Graded - An aggregate possessing a proportionate distribution of successive particle sizes.

Wetlands - Areas that are inundated or saturated by surface or ground water at a frequency and duration sufficient to support, and that under normal circumstances do support, vegetation typically adapted for life in saturated soil conditions. Wetlands generally include swamps, marshes, bogs, and similar areas.

Wheel Load – Half of an axle load.

Wingwall - A wall attached to the abutments of bridges or box culverts retaining the roadway fill. The sloping retaining walls on each side of the center part of a bridge abutment.

Definitions - (continued)

X

Y

Yield - Permanent deformation (permanent set) which a metal piece takes when it is stressed beyond the elastic limit.

Young's Modulus - modulus of elasticity of a material (E); or the stiffness of a material.

Z

BACK

Abbreviations (Initialisms and Acronyms)

A

AASHO	=	American Association of State Highway Officials (1921-1973)
AASHTO	=	American Association of State Highway and Transportation Officials (since 1973)
AB	=	Anchor bolt
ACI	=	American Concrete Institute
AC	=	Asphalt Concrete
ACP	=	Asphalt Concrete Pavement
ACWS	=	Asphalt concrete wearing surface
ADA	=	Americans with Disabilities Act
ADT	=	Average daily traffic (see Definitions)
ADTT	=	Average Daily Truck Traffic
AEE	=	Association of Engineering Employees
AGC	=	Associated of General Contractors of America
AISC	=	American Institute of Steel Construction
AISI	=	American Iron and Steel Institute
AITC	=	American Institute of Timber Construction
a.k.a.	=	Also known as
AML	=	Automated Milepoint Log
AOH	=	Access Oregon Highways
A.P.	=	Angle Point
APA	=	American Plywood Association
AREA	=	American Railway Engineering Association
ARS	=	Accident Records System (Accident Data Unit, Transportation Research Section)
ARTBA	=	American Road and Transportation Builders Association
ASAP	=	As soon as possible
ASCE	=	American Society of Civil Engineers
ASCII	=	American Standard Code for Information Interchange (refers to files that are pure text)
ASTM	=	American Society for Testing and Materials
ATC	=	Applied Technology Council
ATE	=	Associate Transportation Engineer
ATE-D	=	Associate Transportation Engineer - Drafting
ATPM	=	Asphalt-treated permeable material
AWPA	=	American Wood Products Association
AWS	=	American Welding Society

B

b.c.	=	Blind copy (see definitions)
BBS	=	Bulletin Board System (computers)
BDS	=	Bridge Design System (AASHTO software)
BIOS	=	Basic Input/Output System (computers)
BLM	=	Bureau of Land Management (U.S. Dept. of Interior)
BMP	=	Best Management Practice
BMS	=	Bridge Management System

BACK

Abbreviations (Initialisms and Acronyms)

BNRR	=	Burlington Northern Railroad
Bot.	=	Bottom
BPR	=	Bureau of Public Roads (now FHWA)
B Team	=	Team of Bridge Engineer and Bridge Section Supervisors
BRASS	=	Bridge Rating and Analysis of Structural Systems (software)
Bt.	=	Bent
BUBB	=	Bargaining Unit Benefit Board
BVC	=	Begin vertical curve

C

C	=	Degrees Celsius
CAC	=	Citizens Advisory Committee
CAD	=	Computer-aided drafting/computer-aided design
CADD	=	Computer-aided drafting and design
CAE	=	Computer-aided engineering
CalTrans	=	California Department of Transportation
cc	=	Carbon copy
CCT	=	Concrete Control Technician
CD-ROM	=	Compact Disk - Read-Only Memory
CF	=	Cubic feet
CFS	=	Cubic Feet per Second
CICS	=	Customer Information and Control System (Transportation inventory and Mapping Unit software on the mainframe)
CIM	=	Corporate Information Management
CIP	=	Cast-in-place
CIS	=	Career Information System (Training & Employee Development Sect.)
CMP	=	Construction Mitigation Plan
	=	Construction Management Plan
	=	Corrugated metal pipe
COGO	=	Coordinate Geometry language
COM	=	Communications port (serial port on a computer)
CP	=	Cathodic protection
CPM	=	Critical Path Method (method of scheduling)
CPU	=	Central Processing Unit (computers)
CQC	=	Complete Quadratic Combination (method of combining seismic forces or displacements)
CRF	=	Code of Federal Regulations
CRSI	=	Concrete Reinforcing Steel Institute
CRT	=	Cathode Ray Tube display (monitor)
CY	=	Cubic yard
cy	=	Copy
CZM	=	Coastal Zone Management

BACK

Abbreviations (Initialisms and Acronyms)

D

DBA	=	Doing Business As
DBE	=	Disadvantaged Business Enterprises
DEC	=	Digital Equipment Corporation
DEIS	=	Draft Environmental Impact Statement
DEQ	=	Department of Environmental Quality (Oregon)
DHV	=	Design hourly volume
Dia.	=	Diameter
DL	=	Dead load
DOGAMI	=	Department of Geology and Mineral Industries (Oregon)
DM	=	District Manager
DMS	=	District Maintenance Supervisor (old)
DMV	=	Division of Motor Vehicles
DOS	=	Disk Operating System for personal computers
DS	=	Top of deck to streambed distance
DSL	=	Division of State Lands (Oregon)
DTI	=	Direct Tension Indicator (load indicating washer for bolts)

E

E	=	East
EA	=	Expenditure Account
EA	=	Environmental Assessment
EAC	=	Emulsified Asphalt Concrete
EAP	=	Employee Assistance Program
E&C	=	Engineering and Contingencies (used in cost estimates)
EB	=	Eastbound
ECL	=	East city limits
EEO	=	Equal Employment Opportunity program
EEO/AA	=	Equal Employment Opportunity/Affirmative Action
EF	=	Each face
EIS	=	Environmental Impact Statement
El.	=	Elevation
Elev.	=	Elevation
Emb.	=	Embankment
EP	=	Edge of pavement
EPA	=	Environmental Protection Agency (U.S.)
ES	=	Edge of shoulder
EVC	=	End vertical curve
EW	=	Each way
Exp.	=	Expansion

Abbreviations (Initialisms and Acronyms)

F

F	=	Degrees Fahrenheit
FAPG	=	Federal Aid Policy Guide (replaced FHPM 12/9/91)
FAS	=	Federal Aid Secondary (class of highways)
FAT	=	File Allocation Table (on a computer disk)
FBN	=	Film base negative
FBPM	=	Film base positive matte
FEIS	=	Final Environmental Impact Statement
FEMA	=	Federal Emergency Management Agency
FF	=	Far face (don't use for "fill face")
FHPm	=	Federal Highway Program Manual (replaced by FAPG)
FHWA	=	Federal Highway Administration (formerly BPR)
FIPS	=	Federal Information Processing Standards system (IBM software)
FIS	=	Flood Insurance Studies (conducted by FHWA)
FONSI	=	Finding Of No Significant Impact
FORT	=	Field Operations Results Team
FS	=	Far side
ft-k	=	foot-kips
ft-lbs	=	foot-pounds

G

Ga.	=	Gauge
GAO	=	General Accounting Office
GIS	=	Geographic Information System
GLO	=	Government Land Office
GR	=	Guard Rail
GSA	=	General Services Administration
GSP	=	Galvanized Steel Pipe
GUI	=	Graphical User Interface for computers (such as Windows)

H

HBR	=	Highway Bridge Replacement (type of funding)
HBRR	=	Highway Bridge Replacement and Rehabilitation (type of funding)
HDD	=	Hard Disk Drive
HE	=	Highway Engineer (now replaced by TE)
HIP	=	Highway Improvement Plan (6-year plan of ODOT)
HP&R	=	Highway Planning & Research program
HS	=	High Strength
HSIS	=	Highway Safety Information System (FHWA database)
Ht.	=	Height
HW	=	High Water
HWM	=	High Water Mark

Abbreviations (Initialisms and Acronyms)

I

I4R	=	Interstate Resurfacing, Restoration, Rehabilitation and Reconstruction (funding category)
IBM	=	International Business Machines
ID	=	Inside diameter
IDE	=	Internal Drive Electronics (type of computer hard disk)
IDT	=	Idaho Department of Transportation
IF	=	Inside face (don't use!)
IGA	=	Inter-Governmental Agreement
I/O	=	Input/Output
ISB	=	Information Systems Branch
ISPF	=	Integrated System Productivity Facility (IBM mainframe software)
ISTEA	=	Intermodal Surface Transportation Efficiency Act of 1991
ITIS	=	Integrated Transportation Information System
IWRC	=	Independent Wire Rope Core (cables)

J

J	=	Joule, metric energy unit
JCL	=	Job Control Language (mainframe)

K

K	=	Kip (kilopound, 1000 pounds)
k	=	Kilo, one thousand
kg	=	Kilogram, metric mass unit
km	=	Kilometer (1000 meters)
kN	=	KiloNewton, metric force unit
KSF	=	Kips per Square Foot
KSI	=	Kips per Square Inch

L

LAN	=	Local Area Network (computers)
Lbs	=	Pounds
LC	=	Length of curve
LCD	=	Liquid Crystal Display (computers)
LCDC	=	Land Conservation and Development Commission (Oregon)
LF	=	Linear feet
LL	=	Live load
LMC	=	Latex Modified Concrete
LPT	=	Line Printer (parallel computer port)
LRFD	=	Load Resistance Factor Design
L.S.	=	Lump Sum
LSDC	=	Low slump dense concrete
LT	=	Leadership Team

Abbreviations (Initialisms and Acronyms)

M

m	=	Meter, metric length unit
	=	Milli, one thousandth
MBM,MFBM	=	Thousand feet board measure
MC	=	Microsilica modified concrete
M	=	Mega, one million
MH	=	Manhole
MHz	=	MegaHertz (millions of cycles per second)
MOU	=	Memorandum Of Understanding
MP	=	Microfilm print
	=	Milepoint, milepost (even milepoint)
MPO	=	Metropolitan Planning Organization
MSC	=	Minor structure concrete
MSCS	=	Management Scheduling Control System (to replace PCS)
MS-DOS	=	Microsoft Disk Operating System
MSE	=	Mechanically Stabilized Earth (retaining walls)
MSL	=	Mean Sea Level

N

N	=	North
	=	Newton, metric force unit
NB	=	Northbound
NBI	=	National Bridge Inventory
NBIS	=	National Bridge Inspection Standards
NCEER	=	National Center for Earthquake Engineering Research (Buffalo, NY)
NCHRP	=	National Cooperative Highway Research Program (from the Transportation Research Board)
NCL	=	North city limits
NF	=	Near face
NGVD	=	National Geodetic Vertical Datum (MSL = 0.0)
NHI	=	National Highway Institute
NHS	=	National Highway System
NHTSA	=	National Highway Traffic Safety Administration
NICET	=	National Institute for Certification in Engineering Technologies
NMFS	=	National Marine Fisheries Service
NSPE	=	National Society of Professional Engineers
NT	=	New Technology (new version of Microsoft Windows)
NTS	=	Not to Scale

Abbreviations (Initialisms and Acronyms)

O

OBIS	=	Oregon Bridge Inventory System
OCAPA	=	Oregon Concrete & Aggregate Producers Association, Inc.
OC	=	On Center (center-to-center)
OD	=	Outside Diameter
ODF&W	=	Oregon Department of Fish and Wildlife
ODOT	=	Oregon Department of Transportation
OG	=	Original Ground
OMUTCD	=	Oregon Manual on Uniform Traffic Control Devices
OO, O-O	=	Out-to-out
OPEU	=	Oregon Public Employees Union
ORS	=	Oregon Revised Statutes
OS	=	Office Specialist
	=	Operating System
OSHA	=	Occupational Safety and Health Administration (U.S.)
OSHD	=	Oregon State Highway Division
OSU	=	Oregon State University
OTC	=	Oregon Transportation Commission
Oxing	=	Overcrossing
OZ	=	Ozalid print

P

Pa	=	Pascal, metric stress or pressure unit
PC	=	Personal computer
PC	=	Point of curvature
	=	Personal computer
P/C	=	Precast Concrete
PCA	=	Portland Cement Association
PCC	=	Portland Cement Concrete
	=	Point on compound curve
PCF	=	Pounds per Cubic Foot
PCI	=	Prestressed Concrete Institute
PCP	=	Prestressed concrete pipe
PCS	=	Project Control System (to be replaced by MSCS)
	=	Point of change from circular curve to spiral
PE	=	Professional Engineer (registered)
	=	Preliminary engineering
PERS	=	Public Employees Retirement System
PI	=	Point of intersection
PL	=	Performance Level of bridge rail
PM	=	Project Manager

Abbreviations (Initialisms and Acronyms)

PMC	=	Polymer-modified concrete
PMS	=	Pavement Management System
PMT	=	Photo transfer paper
POC	=	Point on circular curve
POS	=	Point on spiral
POT	=	Point on tangent
PR	=	Project Request (Federal-Aid Program)
Prest.	=	Prestressed
PRN	=	Printer port (parallel port on computer, =LPT)
PRC	=	Point of reverse curve
PS	=	Point from tangent to spiral
PSC	=	Point of change from spiral to circular curve
PS&E	=	Plans, Specifications & Estimate
PSBS	=	Project Specifications Bid System
PSF	=	Pounds per Square Foot
PSI	=	Pounds per Square Inch
PSU	=	Portland State University
PT	=	Point of tangency
PS	=	Point of change from tangent to spiral
PSC	=	Point of change from spiral to circular curve
P/S	=	Prestressed Concrete
PT	=	Point of tangency
P/T	=	Post-tensioned concrete
PTI	=	Post-Tensioning Institute
PVC	=	Point on vertical curve
	=	Polyvinyl chloride
PVI	=	Point of vertical intersection
PUC	=	Public Utility Commission

Q

QA	=	Quality Assurance
QCT	=	Quality Control Technician
QPL	=	Qualified Products Listing

BACK

Abbreviations (Initialisms and Acronyms)

R

R	=	Radius
R.	=	Range (surveying)
RAM	=	Random Access Memory
RBI	=	Region Bridge Inspector
RC	=	Reinforced Concrete
RCB	=	Reinforced Concrete Box
RCBC	=	Reinforced Concrete Box Culvert
RCBG	=	Reinforced Concrete Box Girder
RCDG	=	Reinforced Concrete Deck Girder
RCP	=	Reinforced Concrete Pipe
R&D	=	Research and Development
R/D	=	Rough Draft
Rdwy.	=	Roadway
REA	=	Revised Environmental Assessment
Rev.	=	Revised; revision date
RFP	=	Request for Proposals
RFQ	=	Request for Qualifications
RMS	=	Root Mean Square (statistical average)
ROD	=	Record of Decision
ROM	=	Read-Only Memory
RR	=	Railroad
RRR, 3R	=	Resurfacing, Restoration and Rehabilitation
RRRR, 4R	=	Resurfacing, Restoration, Rehabilitation and Reconstruction
RSA	=	Response Spectrum Analysis
R/W	=	Right of Way

Abbreviations (Initialisms and Acronyms)

S

S	=	South
S.	=	Section (surveying)
SB	=	Southbound
SCL	=	South city limits
SCSI	=	Small Computer Systems Interface (type of computer hard disk)
SEAO	=	Structural Engineers Association of Oregon
SEAOC	=	Structural Engineers Association of California
SEBB	=	State Employee Benefit Board
Sec.	=	Section (map location)
Sect.	=	Section (on a drawing)
SF	=	Square feet
SFLMC	=	Silica Fume Latex-Modified Concrete
SH, Shld	=	Shoulder
SHPO	=	State Historic Preservation Office
SHRP	=	Strategic Highway Research Program
SI	=	"Systeme Internationale" (International System of units)
SI&A	=	Structure Inventory and Appraisal
SIMM	=	Single In-line Memory Module (type of memory chips)
SPC	=	Seismic Performance Category
SPFPC	=	System Productivity Facility for Personal Computers (data file editing software)
SPRR	=	Southern Pacific Railroad
SPT	=	Standard Penetration Test for soils
SR	=	Sufficiency Rating
SRCM	=	Soils and Rock Classification Manual (ODOT)
SRSS	=	Square Root of the Sum of the Squares (method of combining seismic forces or displacements)
SSPC	=	Structural Steel Painting Council
STE	=	Supervising Transportation Engineer
S.T.R.	=	Section, Township and Range (surveying)
STP	=	Surface Transportation Program
STIP	=	State Transportation Improvement Program
STRUDL	=	Structural Design Language
SW	=	Sidewalk
SY	=	Square Yard

BACK

Abbreviations (Initialisms and Acronyms)

T

T&E	=	Threatened and Endangered
T.	=	Township (surveying)
	=	Tangent
Tan.	=	Tangent
TAC	=	Technical Advisory Committee
TAG	=	Technical Advisory Group
TB	=	Test boring
TCP	=	Traffic Control Plan
TE	=	Transportation Engineer
TEAMS	=	Transportation Environment Accounting System
TF	=	Top Face
TFE	=	Polytetrafluoroethylene (sliding surface for bearings)
TH	=	Test hole
Thk	=	Thick, thickness
TIP	=	Transportation Improvement Plan
TMP	=	Traffic Management Plan
TP & DT	=	Temporary Protection and Direction of Traffic
TRB	=	Transportation Research Board
TS	=	Tube, Structural
TSF	=	Tons per Square Foot (don't use!)
TSO	=	Time Sharing Option (on mainframe computer)
TS&L	=	Type, Size and Location (formerly called preliminary)
TTS	=	Tracings To Specifications
Typ.	=	Typical

U

UBC	=	Uniform Building Code
UFAS	=	Uniform Federal Accessibility Standards
U of O	=	University of Oregon
UP	=	University of Portland
UPRR	=	Union Pacific Railroad
USC&GC	=	United States Coast and Geodetic Survey
USCG	=	United States Coast Guard
USFS	=	U.S. Forest Service (Dept. of Agriculture)
USGS	=	United States Geological Survey
USRS	=	U.S. Reclamation Service
Uxing	=	Undercrossing

V

V.	=	Version (software)
Var.	=	Varies
VC	=	Vertical curve
VE	=	Value Engineering
VGA	=	Video Graphical Array (computers)
VM	=	Vicinity Map
VMT	=	Vehicle miles of travel

Abbreviations (Initialisms and Acronyms)

W

W	=	West
W/	=	With
WAN	=	Wide Area Network (computers)
WATS	=	Wide Area Telephone Service
WB	=	Westbound
WCL	=	West city limits
WCLIB	=	West Coast Lumber Inspection Bureau
W.M.	=	Willamette Meridian
W/O	=	Without
WS	=	Wearing surface
WSDOT	=	Washington State Department of Transportation
WSC	=	Wire Strand Core (cables)
Wt.	=	Weight
WWF	=	Welded Wire Fabric
WWM	=	Welded Wire Mesh
WWPA	=	Western Wood Products Association
WYSIWYG	=	What-you-see-is-what-you-get (computer interface)

X

XF	=	Xerox film
Xing	=	Crossing
X'Sect	=	Cross-section
XV	=	Xerox vellum

Y

Z

BACK