DRAINAGE

INTEROFFICE MEMO

TECHNICAL SERVICES
Roadway Engineering
Office Phone: (503)-986-3779
Fax Number: (503)-986-3749

DATE: June 26, 2003

TO: Designers, Transportation Design Managers, and Letters to Designers Manual Holders

File Under: Memos to Designers, Part 8 Drainage

FROM: Daniel MacDonald, P.E.

SUBJECT: **Changes to Standard Drawings**

This memo is to alert the designer to the effects some changes to the 2002 Standard Drawings Manual will have in the design process. These changes were made by special committees formed to meld the best standards in the state into one source. All attempts were made to keep the needs of the designer in mind so it is hoped that these changes will be viewed as adjustments to the process rather than major changes.

On RD 336 at the bottom of note 2 there is a limit listed for pipe size of 600 mm maximum in a 1200 mm diameter manhole. We have, for decades, assumed a 900 mm maximum limit in the 1200 mm manhole. Industry has changed that. The idea came up that a 1350 mm diameter manhole could take a 750 mm pipe, but it turns out that not all manufacturers make the 1350 mm manhole, and none consider it even a standard shelf item. So, whenever 600 mm in pipe size is exceeded we must go to the 1500 mm manhole or larger. Specify all manhole sizes greater than 1200 mm diameter on the plan sheet note and on the pipe data sheet.

On RD 700 two changes affect the designer. Since each agency has its own favorite curb height, and since ODOT stands alone using the 175 mm curb height, we must now specify all curb heights on the Typical Section sheets. The height designation on the first typical section showing a curb can be labeled as "typical" if there are no other heights to apply on the project.

Drawing RD 700 also shows curb and gutter models with a variable gutter pan width of 450 mm or 600 mm. Designer picks the width and designates on the typical section. Again, as with the curb heights, the "typical" designation may be used on the first typical section. The designer also needs to note the variances in the cross slope of the gutter and list what is used.

We sincerely hope that you don't have undue problems building your templates and that these "adjustments" become routine.

DJM:dmb

INTEROFFICE MEMO

TECHNICAL SERVICES BRANCH
Geo/Hydro Section
Office Phone: (503) 986-4200
Fax Phone: (503) 986-3407

July 13, 2001

TO: Roadway Designers

FROM: Paul R. Wirfs, P.E.
Urban Hydraulic Engineer

SUBJECT: **Water Quality Structures**

Water quality structures, such as Water Quality Manholes, Sedimentation Manholes and proprietary Water-Quality Structures, should only be used in the following circumstances:

- Space is very limited and swale or pond facilities are not feasible.
- As part of a "treatment train" (a series of facilities providing enhanced water quality treatment).
- Other special circumstances such as research, local agency requests, etc.

Water Quality Manhole (DET 526) and Sedimentation Manhole (DET 525)

These structures are old technology, are not very effective and should not be used alone for treating stormwater. Regulatory agencies do not accept these types of structures for stormwater treatment without being part of a "treatment train." The path of the stormwater inside the structure first dives vertically downward and then, once the flow gets below the opening of the outlet pipe, turns up into the outlet pipe and exits the structure. As the plunging flow dives it passes through the trapped oils and may capture some in the stream. Then as the flow turns it may be quite turbulent and thus can re-entrain the trapped sediments located in the sump of the manhole. The result is to transport some of the oils and sediments out, especially during high flows. Also, because the residence time of the flow in the structure is so short, only the larger sediment particles end up settling out; the smaller particles, which tend to carry most of the pollutants, are washed through. The combination of these factors severely limits the ability of the manhole to be reliable and effective in treating stormwater. Providing no treatment is often a better solution than using these structures due to the low pollutant removal rates and high maintenance requirements.

Proprietary Water Quality Structure

Several manufacturers have developed technology specifically for pollutant removal from stormwater runoff. Many regulatory agencies accept these structures to operate by themselves for stormwater treatment. Special internal baffles and appurtenances redirect the stormwater to prevent flow from directly contacting the trapped oils and sediments and also to increase the length of the flow path. These conditions result in a high retention rate of the captured materials and enable the smaller sediment particles time to settle. The pollutant removal rates are less than swales or ponds and the maintenance for the structures must be conducted with vactor trucks. The costs for these structures is very high compared to other types of facilities which provide equal to or better stormwater pollutant removal rates.

Water quality structures that may be considered for use on ODOT projects are listed on the ODOT "conditional" Approved Product List. If a single proprietary structure is specified, a Public Interest Finding Letter must be processed through the Roadway Engineer Manager. If multiple manufacturers of structures that provide equivalent treatment of storm water are available, they can be identified in the specifications as approved by the Specifications Engineer. Please contact the Hydraulics Unit for additional information on the structures and prior to adding any water quality structure to a project.

Any water quality mitigation should be justified according to PDLT Operational Notice PD-05.

FILE UNDER: Memos to Designers, Part 8, Drainage

PW:skk

INTEROFFICE MEMO

TECHNICAL SERVICES
Roadway Engineering
Office Phone: (503) 986-3714
Fax Number: (503) 986-3749

DATE: June 20, 2001

TO: Designers, Transportation Design Managers, and Letters to Designers Manual Holders.

File Code:

FROM: Cathy Nelson, P.E.
Roadway Engineering Manager

SUBJECT: **Reconstruct Inlet**

This memo is to clarify the use of "Reconstruct Inlet" as a bid item.

Currently there are neither standard drawings nor standard details to define the work to the contractor. Further there isn't any boilerplate special provisions for this bid item.

In the rare case that there is a compelling reason to save part of an existing inlet and the proposed work is more extensive than shown on RD345 "ADJUST EXISTING INLET" you will need to provide a detail in the contract plans that shows all the work involved. You will also need to work with the specification writer to clearly define the description of work, measurement, and payment for inclusion in the special provisions.

Prior approval from your Design Manager is required before utilizing this bid item.

FILE UNDER: Memos to Designers, Part 8, Drainage

CN:DJP:dmb

STATE OF OREGON

INTEROFFICE MEMO

DES 23

TO: Tom Edwards
Roadway Design Supervisor

DATE: September 28, 1989

FROM: Dave Bryson
Dave Bryson
Hydraulics Engineer

SUBJECT: CG-3 Inlets

Your September 6, 1989 letter stated that CG-3 inlets will be specified when requested. Upon receipt of your letter, we compared the performance of CG-3 inlets to our standard grated inlets. The comparison is shown in the attached table. The CG-3 inlet outperforms the CG-1 and G-1 inlets when the gutter grade is less than 1 percent. It provides about the same performance as the CG-2 and G-2 inlets when the gutter grade is less than 0.8 percent. When the gutter grade exceeds 1 percent, bypass becomes a problem with CG-3 inlets and requires close inlet spacing to control the bypass flow. My conclusion is that the CG-3 inlets are cost effective when the gutter grade is less than 1 percent.

DWB:ams

Attachment

PDE SE PE TSE STC VES CSS RSE RWD
RECEIVED
SEP 29 1989
PD/RD/SPECS
BPM LA PDS1 PDS2 RDS SPS PLC OFFICE

BRIDGE SECTION
Oregon State Highway Division

Sheet _____

Bridge Name INLETS

Calculations by DWB/RT Date 9-26-89 Bridge No. _____

TYPICAL SECTION:

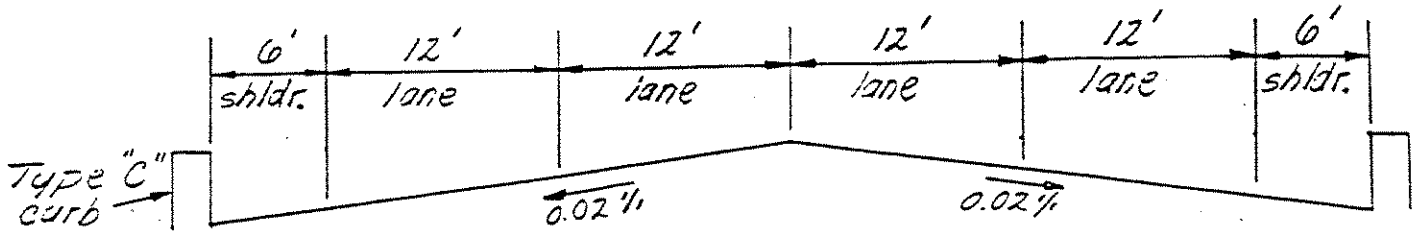

SPACING CRITERIA: 1. max. % bypass = 30%
2. max. flow width = 6'
3. max. spacing = 300'

SUMMARY:

$I_{10\text{-}HR.}$ = 2.25 "/hr.

INLET TYPE		GUTTER GRADE %							
		0.2	0.4	0.6	0.8	1.0	1.5	2.0	3.0
CG-1 & G-1	SPACING	177'	182	181	185	190	206	238	292
	% BYPASS	10	30	30	30	30	30	30	30
	FLOW WIDTH	6'	5.9	5.4	5.2	5.0	4.8	4.8	4.8
CG-2 & G-2	SPACING	197'	231	260	288	300	300	300	300
	% BYPASS	0	17	24	27	24	21	20	15
	FLOW WIDTH	6'	6	6	6	5.7	5.3	5.0	4.5
CG-3	SPACING	196'	245	264	275	236	176	143	107
	% BYPASS	0	12	22	30	30	30	30	30
	FLOW WIDTH	6'	6	6	6	5.4	4.5	4.0	3.3

STATE OF OREGON
ROAD DESIGN-HIGHWAY

INTEROFFICE MEMO
DES 11

TO: Design Team Leaders
Designers

DATE: May 21, 1986

FROM: Rick Kuehn
Final Design Engineer

SUBJECT: Ladder Climbing Safety Devices and 36-inch Diameter Manhole Lids for 20 feet and Deeper Manholes

The Oregon Administrative Rules, OAR 437-88-150, requires the installation of ladder climbing safety devices in 20-feet and deeper manholes. Also, OAR 437-88-125, Workers Compensation Department, states that a 30-inch clear distance must be maintained from the face of the ladder to a permanent obstruction. A 36-inch diameter manhole lid and frame is necessary to provide the required clear distance.

The attached drawing shows the ladder climbing safety device and the 36-inch diameter manhole lid that we will be using for 20 feet and deeper manholes. Please incorporate these details into the contract plans whenever 20 feet and deeper manholes are required.

Attachment

cc: Duane Christensen
C. O. Fredrickson

RK:AL:mg

Note: Designers, file under "Drainage"

FED. ROAD DIV. No.	STATE	PROJECT NUMBER	FISCAL YEAR	SHEET No. / TOTAL SHEETS
.10	OREGON			

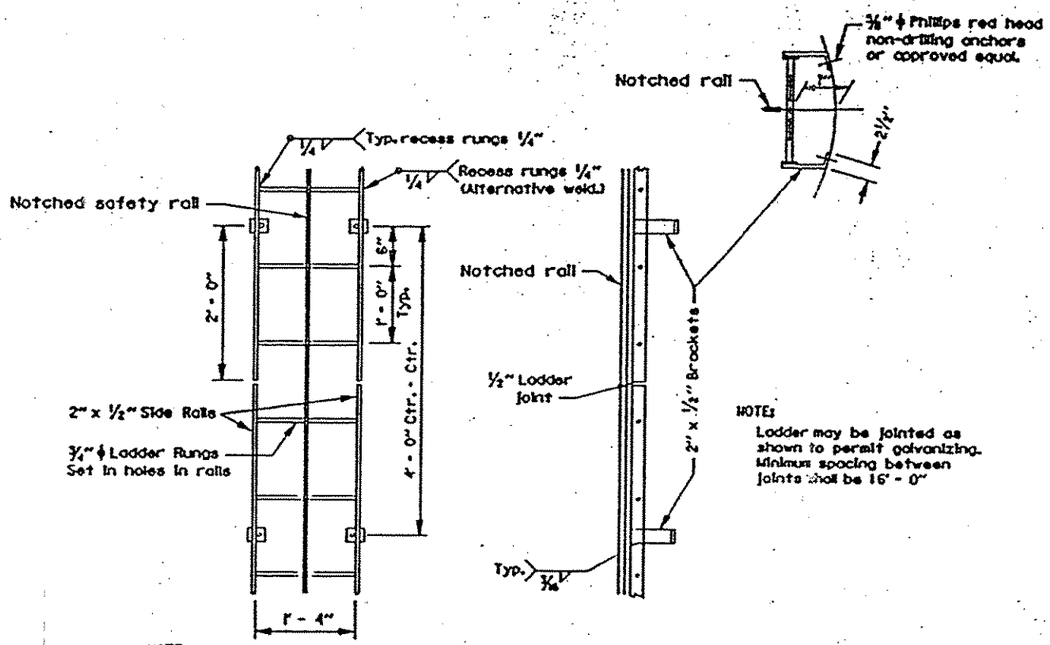

NOTE:
All structural steel shall be A36.
All bolts shall be A307.
All material shall be hot - dipped galvanized after fabrication.

NOTE:
Ladder may be jointed as shown to permit galvanizing. Minimum spacing between joints shall be 16' - 0"

SAFETY LADDER

(For details not shown, see Drg. Nos. 2050 & 2050A)

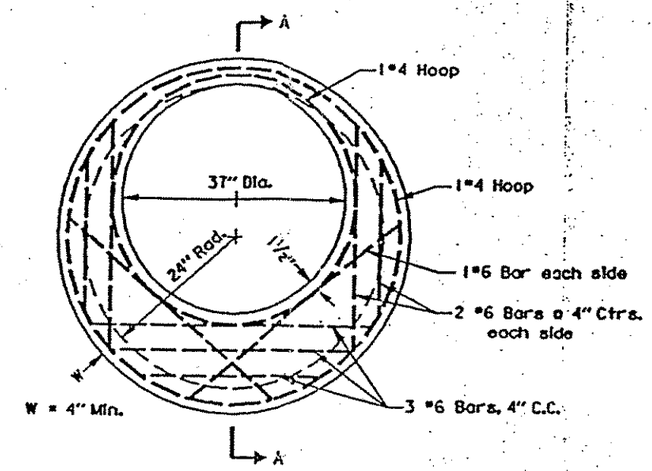

TOP VIEW

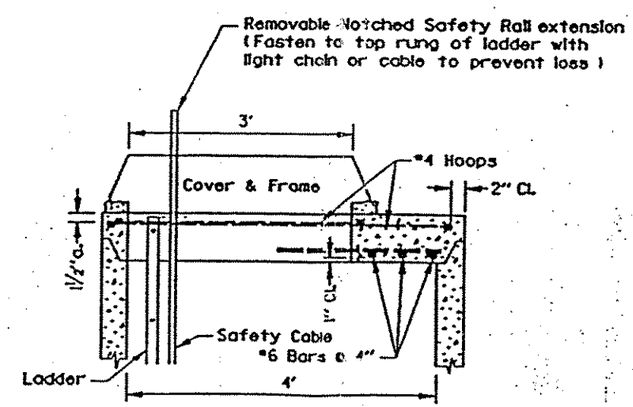

SECTION A - A

NOTE:
Provide steel notched safety rail, removable extension and all required mounting hardware at each access manhole similar to that manufactured by D.B. Enterprises Inc.
(See special provisions)