OPERATION & MAINTENANCE MANUAL

DFI No. : D00262
Facility Type: Water Quality Manhole

JULY, 2011

INDEX

1. IDENTIFICATION 1
2. FACILITY CONTACT INFORMATION 1
3. CONSTRUCTION 1
4. STORM DRAIN SYSTEM AND FACILITY OVERVIEW 2
5. FACILITY HAZ MAT SPILL FEATURE(S) 5
6. AUXILIARY OUTLET (HIGH FLOW BYPASS) 5
7. MAINTENANCE REQUIREMENTS 5
8. WASTE MATERIAL HANDLING 6

APPENDIX A: Operational Plan and Profile Drawing(s)

APPENDIX B: ODOT Project Plan Sheets

APPENDIX C: Proprietary Structure Maintenance Requirements

1. Identification

Drainage Facility ID (DFI):	**D00262**
Facility Type:	Water Quality Manhole
Construction Drawings:	(V-File Number) 35V-168
Location:	District: 2B
	Highway No.: 123
	Mile Post: 0.47 (beg./end)
	Description: This facility is located *on the north side of the Willamette River beneath the NW St Johns Bridge (US 30BY/Hwy 123), along N. Philadelphia Ave. Access to the structure can be obtained from the right side of N. Philadelphia Ave. (NB) just prior to its intersection with N. Willamette Blvd.*

2. Facility Contact Information

Contact the Engineer of Record, Region Technical Center, or Geo-Environmental's Senior Hydraulics Engineer for:

- Operational clarification
- Maintenance clarification
- Repair or restoration assistance

<u>Engineering Contacts</u>:

Region Technical Center Hydro Unit Manager

Or

Geo-Environmental Senior Hydraulics Engineer (503) 986-3365.

3. Construction

Engineer of Record:	ODOT Designer – Region 1 Tech. Center, Timothy Fredette, P.E., 503-731-8200
Facility construction:	2002
Contractor:	N/A

4. Storm Drain System and Facility Overview

This water quality manhole is an underground facility designed to treat stormwater runoff. The system is a proprietary product called Stormceptor® manufactured by Rinker Materials Corp. The underground vortex system provides treatment using hydrodynamic separation by removing or separating the solids from the water via a fiberglass insert with an upper by-pass chamber, inlet and outlet drop/riser pipes, a weir, and a sediment-separation treatment chamber at the bottom. This facility contains an Operation and Maintenance manual as prepared by the manufacturer and is provided in Appendix C.

This facility is located on the north side of the Willamette River beneath the NW St Johns Bridge (US 30BY/Hwy 123), along N. Philadelphia Ave. Access to the structure can be obtained from the right side of N. Philadelphia Ave. (NB) just prior to its intersection with N. Willamette Blvd. See point C of the Operational Plan, Appendix A, where the facility is shown near the southeastern most bridge column.

Stormwater is collected by area inlets, manholes and piping systems, conveying water from surrounding streets and the St. Johns Bridge, above. In particular, an 18-inch pipe conveys water to this facility from two manhole structures to the northeast, adjacent to the bridge abutment alongside the northern half of North Willamette Blvd. Inflows are treated by the water quality manhole (Stormceptor Unit), as described above, and released to the southwest, down North Philadelphia Ave. to North Edison Ave., via 12-inch and larger sized pipes as part of the remaining system, and flowing through Cathedral Park before arriving at its outfall at the Willamette River.

Field inspection of the Stormceptor water quality manhole indicated that the unit needs maintenance to efficiently operate and more effectively remove stormwater pollutants as originally intended; see Photos 1 and 2, below.

A. Maintenance equipment access:
   Access can be made directly from the street and parking area beneath the bridge.

B. Heavy equipment access into facility:

   ☒ Allowed (no limitations)
   ☐ Allowed (with limitations)
   ☐ Not allowed

C. Special Features:

☐ Amended Soils
☐ Porous Pavers
☐ Liners
☐ Underdrains

Photo 1: Looking south at water quality manhole (nearest). While plans only showed one manhole near bridge pier, it is apparent two are present. A downstream standard manhole is shown in the background.

Photo 2: Interior view of Stormceptor water quality manhole, completely silted over and needing maintenance to function properly.

Photo 3: Interior view of Stormceptor water quality manhole, completely silted over and needing maintenance to function properly.

5. Facility Haz Mat Spill Feature(s)

The water quality manhole sump may be used to store a small volume of liquid where it otherwise may difficult to achieve elsewhere. Blocking the 12-inch diameter pipe located in the downstream standard manhole, (at the North Edison Ave. and North Philadelphia Ave. intersection), could be considered an option, but likely not realistic.

6. Auxiliary Outlet (High Flow Bypass)

Auxiliary Outlets are provided if the primary outlet control structure can not safely pass the projected high flows. Broad-crested spillway weirs and over flow risers are the two most common auxiliary outlets used in stormwater treatment facility design. The auxiliary outlet feature is either a part of the facility or an additional storm drain feature/structure.

The auxiliary outlet feature for this facility is:

☒ Designed into facility
As stormwater flows exceed the unit's design capacity a diversion weir routes the water around a separation chamber, effectively bypassing the treatment features, so that flows exit the manhole and leave any captured pollutants behind, to be retained in the separation cylinder and sump below. See Appendix C.

☐ Other, as noted below

7. Maintenance Requirements

Routine maintenance table for non-proprietary stormwater treatment and storage/detention facilities have been incorporated into ODOT's Maintenance Guide. These tables summarize the maintenance requirements for ponds, swales, filter strips, bioslopes, and detention tanks and vaults. Special maintenance requirements in addition to the routine requirements are noted below when applicable.

The ODOT Maintenance Guide can be viewed at the following website:

http://www.oregon.gov/ODOT/HWY/OOM/MGuide.shtml

Maintenance requirements for proprietary structures, such as underground water quality manholes and/or vaults with filter media are noted in Appendix C when applicable.

The following stormwater facility maintenance table (See ODOT Maintenance Guide) should be used to maintain the facility outlined in this Operation and Maintenance Manual or follow the Maintenance

requirements outlined in Appendix C when proprietary structure is selected below:

- ☒ Table 1 (general maintenance)
- ☐ Table 2 (stormwater ponds)
- ☐ Table 3 (water quality biofiltration swales)
- ☐ Table 4 (water quality filter strips)
- ☐ Table 5 (water quality bioslopes)
- ☐ Table 6 (detention tank)
- ☐ Table 7 (detention vault)
- ☒ Appendix C (proprietary structure)
- ☒ Special Maintenance requirements:
  See Appendix C for the manufacturer's operation and maintenance manual.

Note: Special maintenance Requirements Require Concurrence from ODOT SR Hydraulics Engineer.

8. Waste Material Handling

Material removed from the facility is defined as waste by DEQ. Refer to the roadwaste section of the ODOT Maintenance Yard Environmental Management System (EMS) Policy and Procedures Manual for disposal options: http://egov.oregon.gov/ODOT/HWY/OOM/EMS.shtml

Contact any of the following for more detailed information about management of waste materials found on site:

ODOT Clean Water Unit	(503) 986-3008
ODOT Statewide Hazmat Coordinator	(503) 229-5129
ODOT Region Hazmat Coordinator	(503) 731-8304
ODEQ Northwest Region Office	(503) 229-5263

Appendix A

Content:

- **Operational Plan and Profile Drawing(s)**

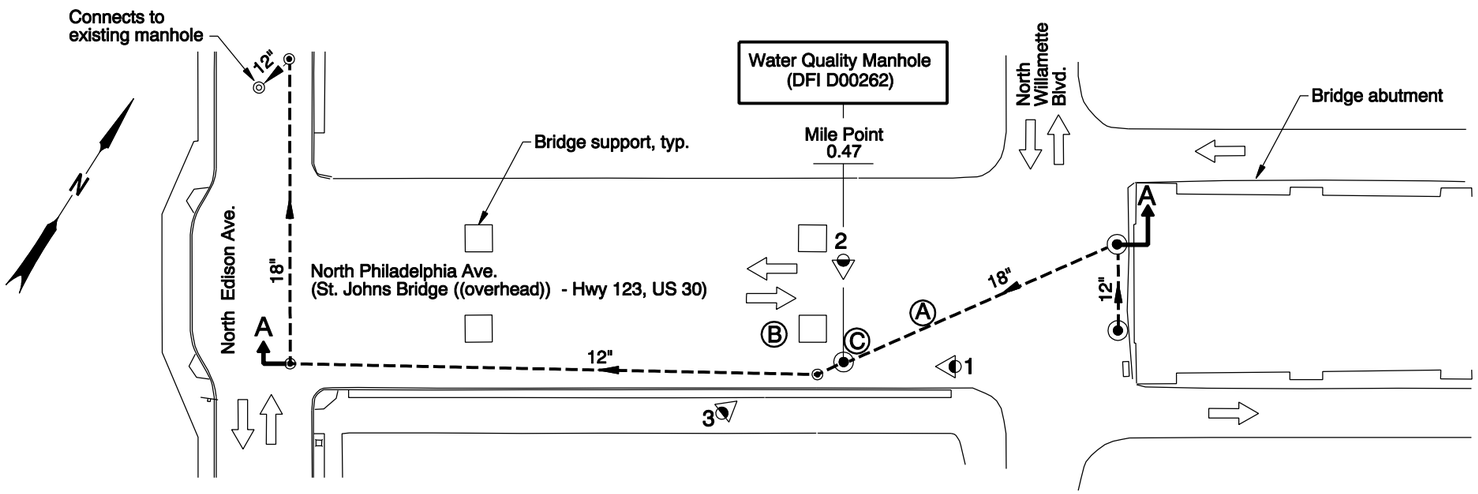

PLAN
N.T.S.

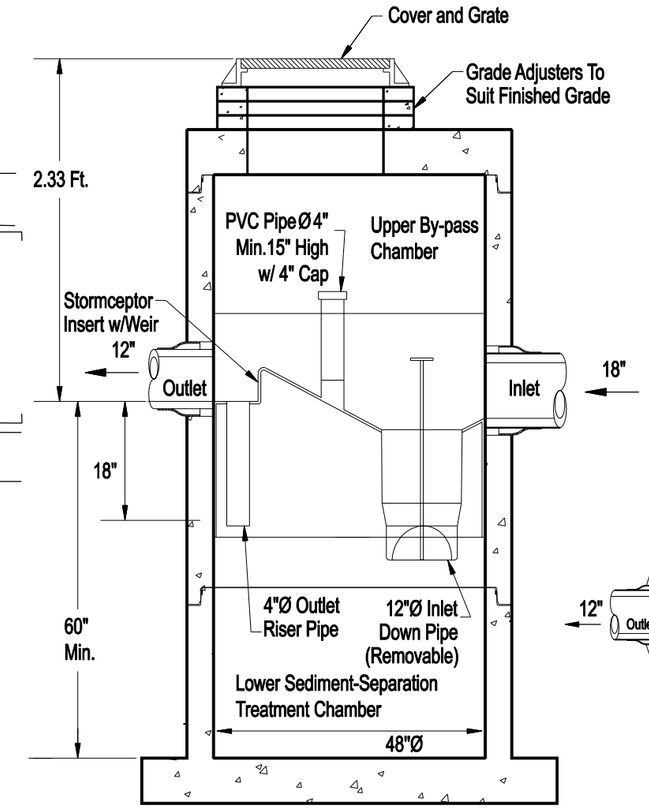

SECTION

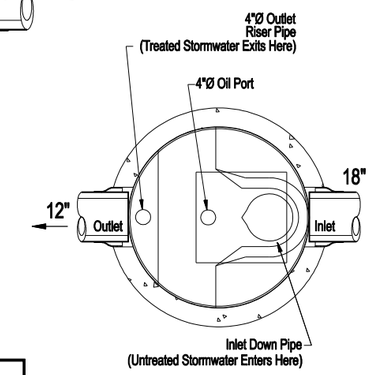

Plan

WATER QUALITY MANHOLE - STORMCEPTOR UNIT
DETAIL AT POINT Ⓒ
N.T.S.

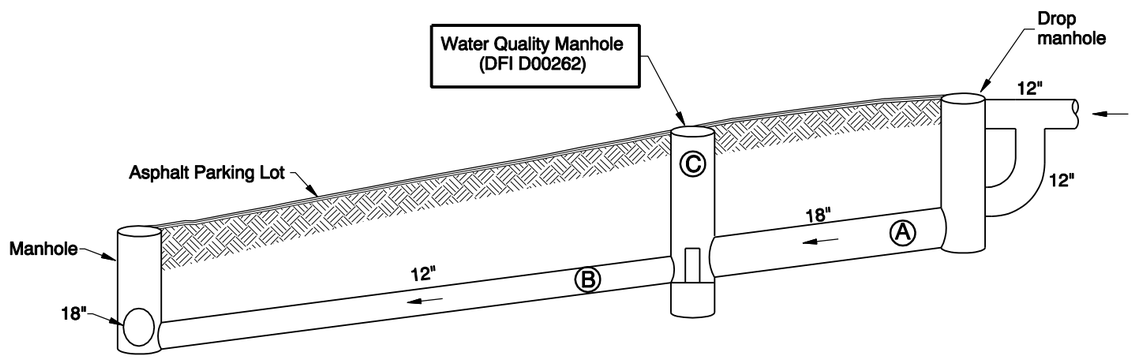

SECTION A-A
N.T.S.

LEGEND:

- Photo Location / Direction
- Ⓐ Inlet To Water Quality Manhole 18" Pipe
- Ⓑ Outlet from Water Quality Manhole 12" Pipe
- Ⓒ Water Quality Manhole Stormceptor Unit
- Manhole (and/or)
- Inlet (and/or)
- Traffic Flow / Direction
- Storm Pipe (Facility)
- Storm Pipe
- Conveyance Direction

Sht. 1 of 1

OREGON DEPARTMENT OF TRANSPORTATION

Prepared By: Bob Knorr

Drafted By: Rodney Schultz

DFI D00262
MAINTENANCE DISTRICT 2B HWY 123
WATER QUALITY MANHOLE
NORTH EAST PORTLAND HWY MP 0.47
MULTNOMAH COUNTY

Appendix B

Content:

- **ODOT Project Plan Sheets**
  - ***Cover/Title Sheet***
  - ***Water Quality/Detention Plan Sheets***
  - ***Other Details***

STATE OF OREGON

DEPARTMENT OF TRANSPORTATION

PLANS FOR PROPOSED PROJECT

GRADING, STRUCTURE, PAVING, STRIPING, SIGNING, ILLUMINATION, & SIGNAL

ST. JOHNS BRIDGE (PORTLAND) SEC.

NORTHEAST PORTLAND HIGHWAY

MULTNOMAH COUNTY

NOVEMBER 2002

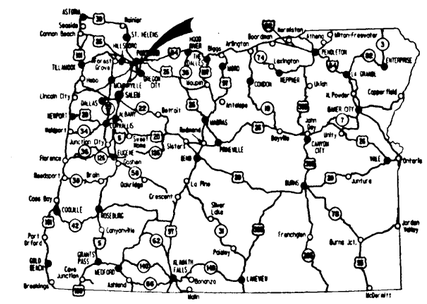

Overall Length Of Project - 1.09 km (0.68 Mile)

ATTENTION :
Oregon Law Requires You To Follow Rules Adopted By The Oregon Utility Notification Center. Those Rules Are Set Forth In OAR 952-001-0010 Through OAR 952-001-0090. You May Obtain Copies Of The Rules From The Center, Or Answers To Questions About The Rules By Calling (503) 232-1987.

LET'S ALL WORK TOGETHER TO MAKE THIS JOB SAFE

INDEX OF SHEETS	
SHEET NO.	DESCRIPTION
1	Title Sheet
1A	Index Of Sheets Contd.
1A-2	Standard Drawing Numbers
2, 2A Thru 2A-5 Incl.	Typical Sections
2B Thru 2B-10 Incl.	Details
2C Thru 2C-6 Incl.	Traffic Control Primary Detour Signing
2C-7 Thru 2C-10 Incl.	Traffic Control Secondary Detour Signing
2C-11 Thru 2C-14 Incl.	Traffic Control Plans, Bridge Closure
2C-15 Thru 2C-19 Incl.	Traffic Control Plans, Stage I
2C-20 Thru 2C-24 Incl.	Traffic Control Plans, Stage II
2C-25 Thru 2C-29 Incl.	Traffic Control Plans, Stage III
2C-30 Thru 2C-34 Incl.	Traffic Control Plans, Stage IV
2D Thru 2D-4 Incl.	Erosion Control Details
2D-5, 2E-6	Erosion Control Plans
2E, 2E-2	Water Quality Details
2E-3 Thru 2E-5 Incl.	Water Quality Plans
2F Thru 2F-6 Incl.	Pipe Data
3	Alignment & General Construction
3A	Drainage & Utilities
3B	Profile
3C	Alignment & General Construction
4	Alignment & General Construction
4A	Drainage & Utilities
4B	Profile
5	Alignment & General Construction
5A	Drainage & Utilities
5B	Profile
6	Alignment & General Construction
6A	Drainage & Utilities
6B	Profile
7	Alignment & General Construction
7A	Drainage & Utilities
7B	Profile
8	Alignment & General Construction
8A	Drainage & Utilities
8B	Profile
8C	Drainage & Utilities
8D	Profile
	PERMANENT PAVEMENT MARKINGS
ST-1 Thru ST-5 Incl.	Striping Plans

BHF-MGS-S123(9)
Project Limits
STA. "NR" 0 + 675.9
(M.P. 0.00, Hwy. 123 &
M.P. 7.36, Hwy. 2W)

BHF-MGS-S123(9)
Project Limits
STA. "BR" 0 + 000 (M.P. 1.29, Hwy. 123)

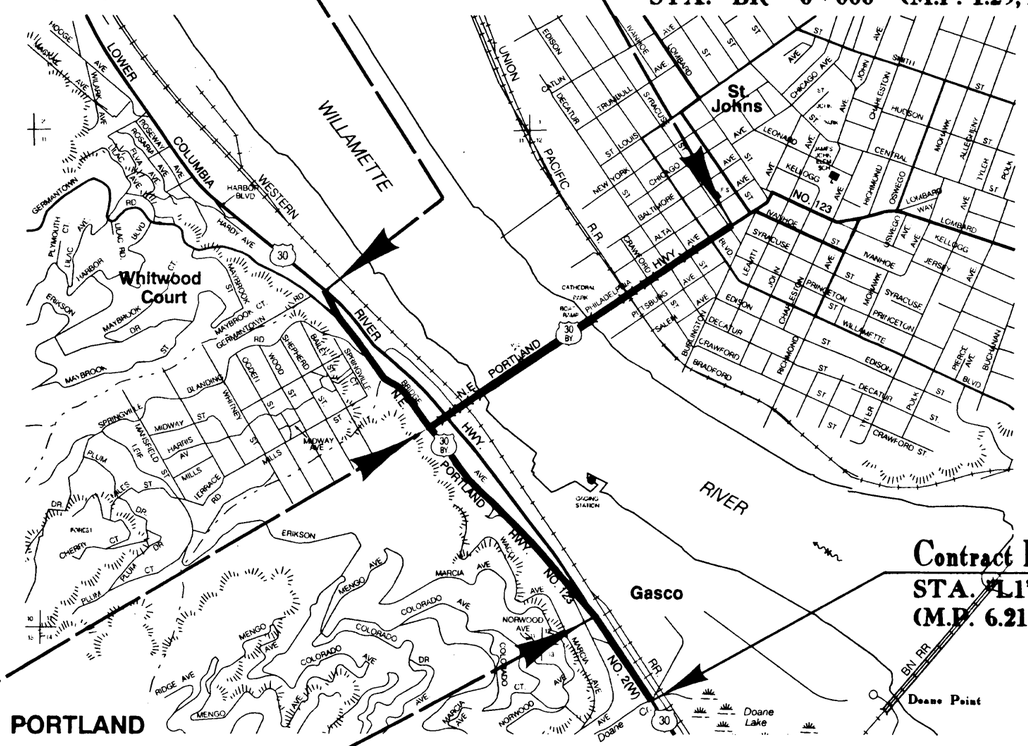

T. 1 N., R. 1 W., W.M.

Contract Limits
STA. "L1" 20 + 001
(M.P. 6.21, Hwy. 2W)

Project Limits BHF-MGS-S123(9)
STA. "NR" 0 + 000 (M.P. 0.42, Hwy. 123)
STA. "SR" 0 + 000 M.P. 0.57, Hwy. 123)

Project Limits BHF-MGS-S123(9)
STA. "SR" 0 + 917.3 (M.P. 0.00, Hwy. 123 & M.P. 6.41, Hwy. 2W)

METRIC

OREGON TRANSPORTATION COMMISSION

Steven H. Corey	CHAIRMAN
Gail L. Achterman	COMMISSIONER
Stuart Foster	COMMISSIONER
Randall Papé	COMMISSIONER
John Russell	COMMISSIONER
Bruce A. Warner	DIRECTOR OF TRANSPORTATION

REGISTERED PROFESSIONAL ENGINEER 13,704 OREGON JULY 16, 1987 CATHERINE M. NELSON Expires Dec. 31, 2002

Catherine M. Nelson

TECHNICAL SERVICES MANAGING ENGINEER

ST. JOHNS BRIDGE (PORTLAND) SEC.
NORTHEAST PORTLAND HIGHWAY
MULTNOMAH COUNTY

FEDERAL HIGHWAY ADMINISTRATION		PROJECT NUMBER	SHEET NO.
REGION 10	OREGON DIVISION	BHF-MGS-S123(9)	1

03-OCT-2002 10:43

c:\usr\projects\09393r1.dgnet

VIEW A1 C126-1402-011

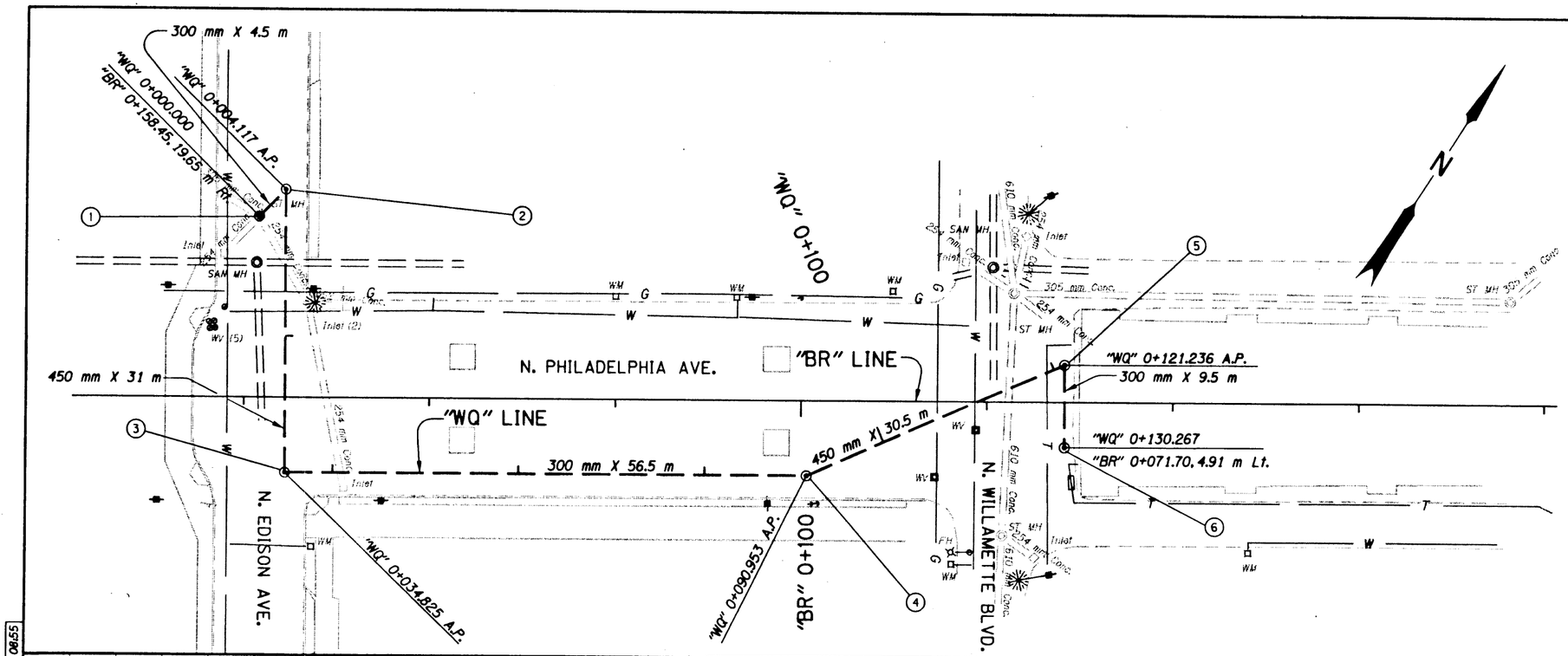

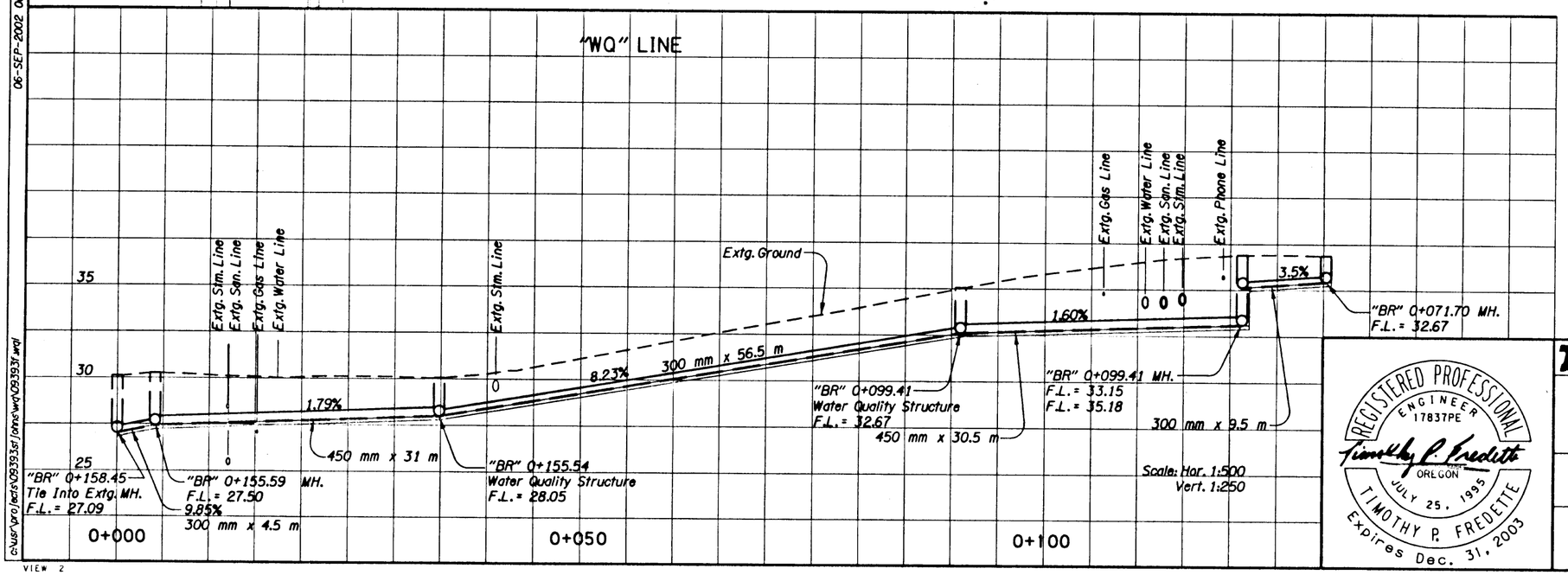

1. Sta."BR" 0+158.45, 19.65 m Rt.
   Sta."WQ" 0+000.00 ● CL
   Reconstruct Manhole
   Inst. 300 mm Sew.Pipe - 4.5 m
   F.L.= 27.09 m (In Extg. MH)
   Tr. Exc. - 14.8 m^3
   Pipe Under Pvmt. - 4.5 m

2. Sta."BR" 0+155.59, 22.59 m Rt.
   Const. Manhole, F.L.= 27.50 m
   Inst. 450 mm Sew. Pipe - 31 m
   Tr. Exc. - 85.9 m^3
   Pipe Under Pvmt. - 31 m

3. Sta."BR" 0+155.54, 8.12 m Lt.
   Const. Manhole, F.L.= 28.05 m
   Inst. 300 mm Sew. Pipe - 56.5 m
   Tr. Exc. - 122.7 m^3
   Pipe Under Pvmt. - 56.5 m

4. Sta."BR" 0+099.41, 8.10 m Lt.
   Const. Water Quality Structure, F.L.= 32.67 m
   Inst. 450 mm Sew. Pipe - 30.5 m
   Tr. Exc. - 105.6 m^3
   Pipe Under Pvmt. - 30.5 m

5. Sta."BR" 0+071.70, 4.12 m Rt.
   Const. Drop Manhole, F.L. Out = 33.15 m
   Inst. 300 mm Sew. Pipe - 9.5 m
   F.L. In = 35.18 m
   Tr. Exc. - 15.5 m^3
   Pipe Under Pvmt. - 9.5 m

6. Sta."BR" 0+071.70, 4.91 m Lt.=
   Sta."WQ" 0+130.267
   Const. MH, F.L.= 35.50 m

All Dimensions Are In Meters (m)
Unless Otherwise Noted.

REGISTERED PROFESSIONAL ENGINEER
17837PE
Timothy P. Fredette
OREGON
JULY 25, 1995
TIMOTHY P. FREDETTE
Expires Dec. 31, 2003

OREGON DEPARTMENT OF TRANSPORTATION
GEO / HYDRO SECTION

ST. JOHNS BRIDGE (PORTLAND) SEC.
NORTHEAST PORTLAND HIGHWAY
MULTNOMAH COUNTY

Project Leader - Bret N. Richards
Designed By - Timothy P. Fredette
Drafted By - Martin G. Casillas

WATER QUALITY PLAN

SHEET NO. 2E-4

VIEW 2

06-SEP-2002 08:55
c:\usr\projects\03933st\johns\wq\03933f.wql

Appendix C

Content:

- **Proprietary Structure Maintenance Requirements**

Rinker MATERIALS™

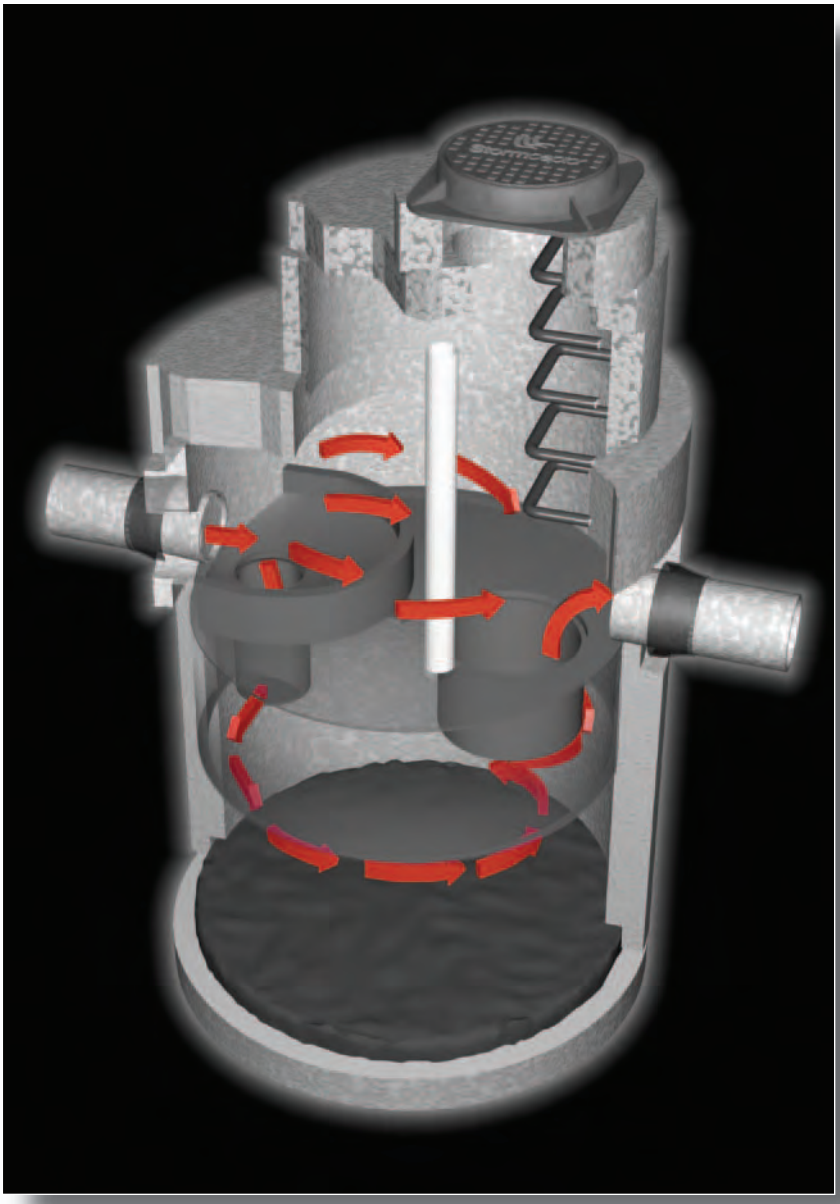

THE STORMCEPTOR® SYSTEM

Technical Manual

Stormceptor® Summary

Stormceptor is a patented water quality treatment structure for storm drain systems. Stormceptor removes free oil and suspended solids from storm water preventing spills and non-point source pollution from entering downstream lakes and rivers. The key benefits of implementing Stormceptor include:

- Capable of removing more than 80% of the annual sediment load when properly applied as a source control for small areas
- Captures free oil from storm water during normal flow conditions
- Prevents scouring or re-suspension of trapped pollutants
- Can be implemented as part of a treatment train (ex. prevents groundwater contamination in recharge measures, extends the maintenance period for other storm water quality measures)
- Excellent hydrocarbon spills control device for commercial and industrial developments
- Simple to design and specify
- Easy to install in new or retrofit situations
- Easy to maintain (vacuum truck)
- Can be used as a bend structure
- Pre-engineered for traffic loading
- Does not require a large drop in storm drain elevation for implementation (1" for single inlet, 3" for multiple inlet)
- STORMCEPTOR clearly marked on the cover (excluding inlet designs)

Although Stormceptor is extremely versatile, users of this document should keep in mind several key constraints:

- Only the STC 450*i* Stormceptor is specifically designed as a storm drain inlet
- The difference between the inlet pipe invert elevation and the outlet pipe elevation must be 1" for a one inlet/one outlet configuration and 3" for a multiple inlet, STC 450*i* and STCs (series) configuration
- The largest standard inlet/outlet size that can be accommodated without customization is 42" I.D. RCP (excluding the STC 450*i*)
- There is a minimum requirement for 24" of cover above the crown of the pipe (inside top of pipe) to grade for the concrete Stormceptor

Rev. 3/2006

Stormceptor Technical Manual Contents

1.0 Stormceptor Overview
- **1.1** Stormceptor Applications
- **1.2** Stormceptor System Operation
- **1.3** Stormceptor Testing

2.0 Design Information
- **2.1** Sizing Guidelines
- **2.2** Configuration of the Storm Drain System
- **2.3** Location in the Storm Drain System
- **2.4** Technical Specifications
- **2.5** Design Parameters

3.0 Installation Procedures

4.0 Maintenance Guidelines
- **4.1** Recommended Maintenance Procedure

Appendix A Stormceptor CAD Drawings

Appendix B Stormceptor Patent Information

Appendix C Stormceptor Weights

		Page
List of Tables		
Table 1.	SWMM Area Parameters	7
Table 2.	Typical Storm Water Particle Size Distribution	8
Table 3.	Coarse Storm Water Particle Size Distribution	8
Table 4.	Influent and Effluent Pipe Diameters (Concrete)	12
Table 5.	Stormceptor Dimensions	14
Table 6.	Stormceptor Capacities	14
Table 7.	By-Pass Flow Rate	15
Table 8.	Sediment Depths Indicating Required Maintenance	19
List of Figures		
Figure 1.	Stormceptor Operation During Normal Flow Conditions	4
Figure 2.	Stormceptor Operation During High Flow Conditions	5
Figure 3.	Comparison of Model Results to Field Monitoring	9
Figure 4.	STC 450*i* Inlet Stormceptor	10
Figure 5.	Typical Stormceptor Configuration	10
Figure 6.	Stormceptor as a Bend Structure	10
Figure 7.	Multiple Inlets to Stormceptor	11
Figure 8.	Submerged Stormceptor Design	12
Figure 9.	Stormceptor Location	13

1.0 Stormceptor Overview

The Stormceptor System is a water quality treatment device used to remove total suspended solids (TSS) and free oil (TPH) from storm water run-off. Stormceptor takes the place of a conventional junction or inlet structure within a storm drain system. Rinker Materials manufactures the Stormceptor System with precast concrete components and a fiberglass disc insert. A fiberglass Stormceptor can also be provided for special applications. Thousands of Stormceptor Systems have been installed in various locations throughout North America, Australia and the Carribbean since 1990.

Stormceptor follows the philosophy of treating pollution at its source. Treating pollution at the source is the preferred methodology for water quality control since the dilution of pollutants in storm water becomes problematic in terms of effective treatment as the drainage area increases.

The Stormceptor System product line consists of four patented designs:

- The In-Line (Conventional) Stormceptor, available in eight model sizes ranging from 900 to 7200 gallon storage capacity.
- An In-Line (Series) Stormceptor is available in three model sizes ranging from 11,000 to 16,000 gallon storage capacity.
- The Submerged Stormceptor, an in-line system designed for oil and sediment removal in partially submerged pipes, available in all models sizes ranging from 450 to 16,000 gallon storage capacity.
- The Inlet Stormceptor is a 450 gallon inlet (or in-line) structure designed for small drainage areas.

The key advantage of Stormceptor compared to other water quality controls in a storm drain is the patented internal by-pass (no external by-pass required) which prevents the resuspension and scouring of settled material during subsequent storm events.

1.1 Stormceptor Applications

Stormceptor is applicable in a variety of development situations including:

- storm water quality retrofits for existing developments
- industrial and commercial parking lots
- automobile service stations
- airports and military installations
- vehicle loading and unloading areas
- areas susceptible to spills of material lighter than water (bus depots, transfer stations, etc.)
- new residential developments, re-development in the urban core
- pre-treatment (as part of a treatment train)

Existing Development Retrofits

Existing developed areas generally provide numerous constraints to the implementation of water quality enhancement. Surrounding properties define the grading of the development (or else berms and expensive retaining walls are required) and existing sewer inverts and locations define the minor system drainage route. These constraints generally limit the number and type of options available to the storm water management professional with respect to water quality enhancement.

In retrofit applications, Stormceptor is an attractive solution due to its vertical orientation, low life cycle costs, ease of installation and maintenance and compatibility with the existing drainage system.

Potential Spill Areas

Parking lots, streets, and industrial areas that are subject to high volumes of traffic and/or transfer of hydrocarbon materials are potential spill areas. Generally, the area of land draining to the storm drains in these instances is small.

Stormceptor is recommended for these types of land use regardless of whether other water quality control techniques are proposed. The spills protection provided by Stormceptor prevents water resources from damaging spills which have toxic effects on the instream aquatic resources.

Re-development/Intensification

Re-development/intensification can be classified as new construction or re-development on an existing developed parcel of land. This can be an addition to an existing development, or the replacement of the entire development with a similar or new type of land use.

In these situations, surface treatment techniques are generally not feasible, meaning that any treatment system must conform to the existing storm drain. The implementation of large underground systems (such as tanks, underground sand filters, etc.) can be problematic in ultra-urban areas due to the proximity of other underground utilities, the configuration of the existing storm drain, and long term maintenance.

Most redevelopment situations are small in size. Surface storm water quality techniques for these areas would result in a loss of developable land that could jeopardize the economic feasibility of small urban areas.

Pre-Treatment

Stormceptor is not intended to replace natural storm water management system solutions (wet ponds, wetlands) for large residential subdivisions. However, Stormceptor is effective as part of the treatment train approach in these developments. The use of Stormceptor for street drainage can help to offset long-term maintenance costs if catch-basin sumps are eliminated.

In these situations, maintenance is centralized at Stormceptor locations reducing the time and cost of storm drain maintenance.

1.2 Stormceptor System Operation

The Stormceptor consists of a lower treatment chamber, which is always full of water, and a by-pass chamber. Storm water flows into the by-pass chamber via the storm drain or grated inlet (Inlet Stormceptor). Normal flows are diverted by a weir and drop pipe arrangement into a treatment chamber. Water flows up through the submerged outlet pipe based on the head at the inlet weir and is discharged back into the by-pass chamber downstream of the weir. The downstream section of the pipe is connected to the outlet storm drain pipe.

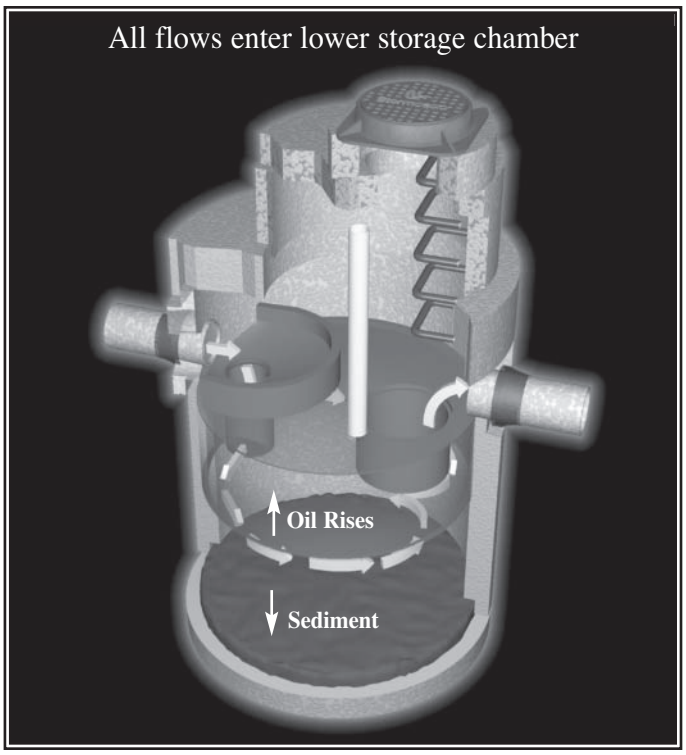

Figure 1. Stormceptor Operation During Normal Flow Conditions

Oil and other liquids with a specific gravity less than water will rise in the treatment chamber and become trapped under the fiberglass weir, since the outlet pipe is submerged. Sediment will settle to the bottom of the chamber by gravity. The circular design of the treatment chamber helps to prevent turbulent eddy currents and to promote settling.

During infrequent high flow conditions, storm water will by-pass the weir and be conveyed to the outlet storm drain directly (Figure 2). Water, which overflows the weir, creates a backwater effect on the outlet pipe (head stabilization between the inlet drop pipe and outlet riser pipe) ensuring that excessive flow will not be forced into the treatment chamber which could scour or resuspend the settled material. The by-pass is an integral part of the Stormceptor since other oil/grit separators have been noted to scour during high flow conditions (Schueler and Shepp, 1993).

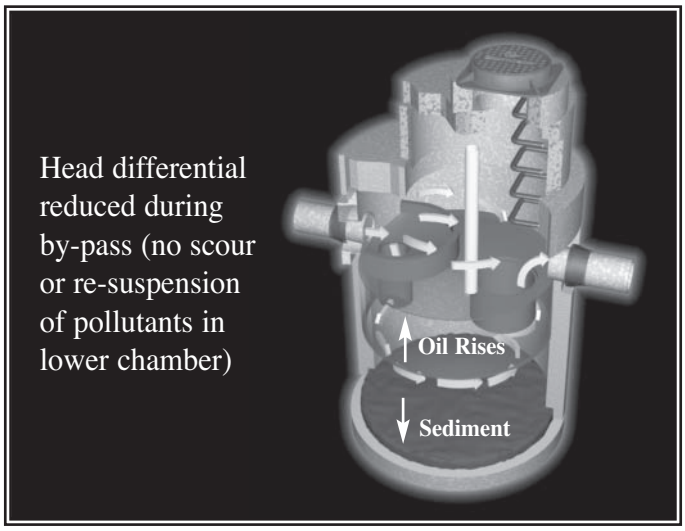

Figure 2. Stormceptor Operation During High Flow Conditions

Stormceptor comes complete to the job site with its own frame and cover. The cover (excluding the inlet design) has the name STORMCEPTOR clearly embossed on it to allow easy identification of the unit in the field for maintenance.

1.3 Stormceptor Testing

At Rinker Materials and Stormceptor Corporation testing the effectiveness of the Stormceptor System goes far beyond the controlled laboratory environment. Since its introduction in 1990, numerous independent field test and studies detailing the effectiveness of Stormceptor have been completed.

Detailed reports from these studies are available from the Rinker Materials Stormceptor office at (800) 909-7763. The major findings of many of these studies are summarized as follows:

- Laboratory testing at the University of Coventry indicated that over 97% of oil, 83% of sand, and 73% of peat are removed at a flow rate of 0.32 cfs (9 L/s) in a 6 foot diameter Stormceptor
- The NWRI laboratory testing (with 150μm synthetic sand) indicated that 90% removal would be achieved at a flowrate of ≤ 0.21 cfs (6 L/s)
- Negligible scouring of settled material occurred in the NWRI laboratory testing under high flow conditions
- The TSS removal rate for the unit in Westwood, Massachusetts (1997) was consistent with state requirements (>80%).
- Captured sediment particle size distribution indicate that 85% of the sediment collected by Stormceptor is smaller than 100 μm in size

- Numerous spills have been captured by units in operation (US Peace Bridge Authority, City of Edmonton, City of Toronto, Canadian Forces Base, City of Madison)
- The Stormceptor can remove approximately 20-30% of the Total Phosphorus from influent storm water (Madison, Wisconsin study; Como Park, Minnesota study).
- The headloss through the Stormceptor unit is approximately equal to a 60˚ bend at a manhole (loss coefficient K ≅ 1.3) (single inlet design)

2.0 Design Information

The Stormceptor System is designed based on the total annual rainfall (using historical rainfall data), total drainage area and the percent of impervious area. Small frequent storms account for a majority of annual rainfall and for a majority of the sediment loading.

Storm sewers are designed to convey a specific flow generated by the design storm. The design storm is typically the highest flow event that may be encountered for a specific period of time, measured in years. Typical design storms are the 2 year, 5 year and 10 year storms.

These design principles are impractical when they are applied for stormwater quality. By definition, design storms occur infrequently and typically account for a very small fraction of the annual rainfall volume. Designing for stormwater quality using principles for sizing sewers becomes impracticable and uneconomical in that BMP's would have to be designed to contain a large volume of runoff created by a design storm which would in turn be needed on a very infrequent basis.

2.1 Sizing Guidelines

Stormceptor sizing is based on computer simulation of suspended solids removal within the Stormceptor. A computer model was developed based on the USEPA SWMM Version 4.3. Solids build-up, wash-off and settling calculations were added to the hydrology code to estimate suspended solids capture by the Stormceptor. For the complete Stormceptor Sizing Program, please contact your local area representative or the Rinker Materials Stormceptor office at (800) 909-7763.

Stations across the United States were selected based on location, period of record, data resolution and completeness within the period of record. Fifteen minute data were utilized recognizing the small time of concentration that would typically be encountered in most Stormceptor applications. The model uses an internal 5 minute timestep at all times regardless of the rainfall timestep.

SWMM models catchments and conveyance systems are based on input rain, temperature, wind speed and evaporation data. Only rain data is used in the model. The default SWMM daily evaporation value (0.1"/day) was used. The Horton equation was chosen for infiltration. The method of infiltration chosen is unimportant due to the level of imperviousness of Stormceptor applications (mainly parking lots, etc.). Values of SWMM parameters used in the model are shown in Table 1.

Table 1. SWMM Area Parameters	
Area - acre	variable
Imperviousness	99%
Width - feet	variable*
Slope	2%
Impervious Depression Storage - inches	0.19
Pervious Depression Storage - inches	0.02
Impervious Manning's n	0.015
Pervious Manning's n	0.25
Maximum Infiltration Rate - inches/hour	2.46
Minimum Infiltration Rate - inches/hour	0.39
Decay Rate of Infiltration (s^{-1})	0.00055

* The width of catchment is assumed equal to twice the square root of the area.

The distribution of pollutant load is important for measures that incorporate a high-flow by-pass (commonly known as "first flush" measures). Accordingly, build-up/wash-off calculations are employed to correctly distribute the pollutant load with flow recognizing the need to optimize the sizing of small-site storm water quality measures.

In the model, solids build-up and wash-off are both approximated using an exponential distribution. The distribution of solids build-up is a function of antecedent dry days according to equation 1 (Sartor and Boyd, 1972).

The choice of particle size distribution and settling velocities are a key part of the modeling exercise. Different settling velocities can be applied to the same particle size distribution based on the specific gravity of the particles, or to account for the effect of non-ideal settling or the effect of flocculation on settling. Two particle size distributions can be selected in the model. A fine particle size distribution can be selected that reflects the fines in storm water (USEPA, 1983; Minton, 1999). This particle size distribution is given in Table 2. The distribution given in Table 2 is commonly accepted by most regulatory agencies in North America. A coarse particle size distribution can also be selected which reflects material larger than or equal to 150 μm. This distribution is given in Table 3. The coarse distribution is provided to allow comparisons with competitors that size their devices based on only the larger particles.

Settling velocities were then assessed for each of the particle sizes provided in Tables 2 and 3. The calculation of settling velocities is based on Stokes' law.

A specific gravity of 2.65 is commonly associated with sand-size particles whereas the fines in storm water are commonly associated with a lower specific gravity due to the organic content.

Research indicates that there is a high potential for coagulation amongst the smaller particles (Ball and Abustan, 1995) which will increase settling velocities and TSS removal rates. Furthermore, historical settling velocity calculations have been based on discrete particle methodologies (vertical settling column tests) that do not account for potential coagulation or flocculation. Numerous field tests on the Stormceptor (Labatiuk, 1996; Ontario MOE, 1999; Bryant, 1995) have shown that a significant percentage of the solids collected in the Stormceptor are fine. In recognition of this, a flocculation equation was used to determine the settling velocity for particles equal to or smaller than 20 μm.

Table 2. Typical Storm Water Particle Size Distribution

Particle Size (μm)	Percent by mass (%)	Specific Gravity	Settling Velocity (m/s)
20	20	*	0.00035
60	20	1.8	0.00158
150	20	2.2	0.01070
400	20	2.65	0.06500
2000	20	2.65	0.28700

* Flocculated settling velocity based on $V_s = 0.35 + 1.77\ P_s$

Where: V_s = Settling Velocity (mm/s)

P_s = Particle Size (μm)

Table 3. Coarse Storm Water Particle Size Distribution

Particle Size (μm)	Percent by mass (%)	Specific Gravity	Settling Velocity (m/s)
150	60	2.65	0.01440
400	20	2.65	0.06500
2000	20	2.65	0.28700

The influent pollution is distributed uniformly in the flow such that during by-pass conditions the amount of pollution in the by-pass is proportional to the flow being by-passed. The total load to the Stormceptor, load removed by the Stormceptor, and load by-passing the Stormceptor are calculated at the end of the simulation to provide an estimate of overall TSS removal. The total volume of water coming to the Stormceptor and by-passing the Stormceptor for the period of record are used to calculate the percentage of annual runoff treated by the Stormceptor.

Figure 3 indicates that the model provides reasonable estimates of TSS removal when compared with actual monitoring performance.

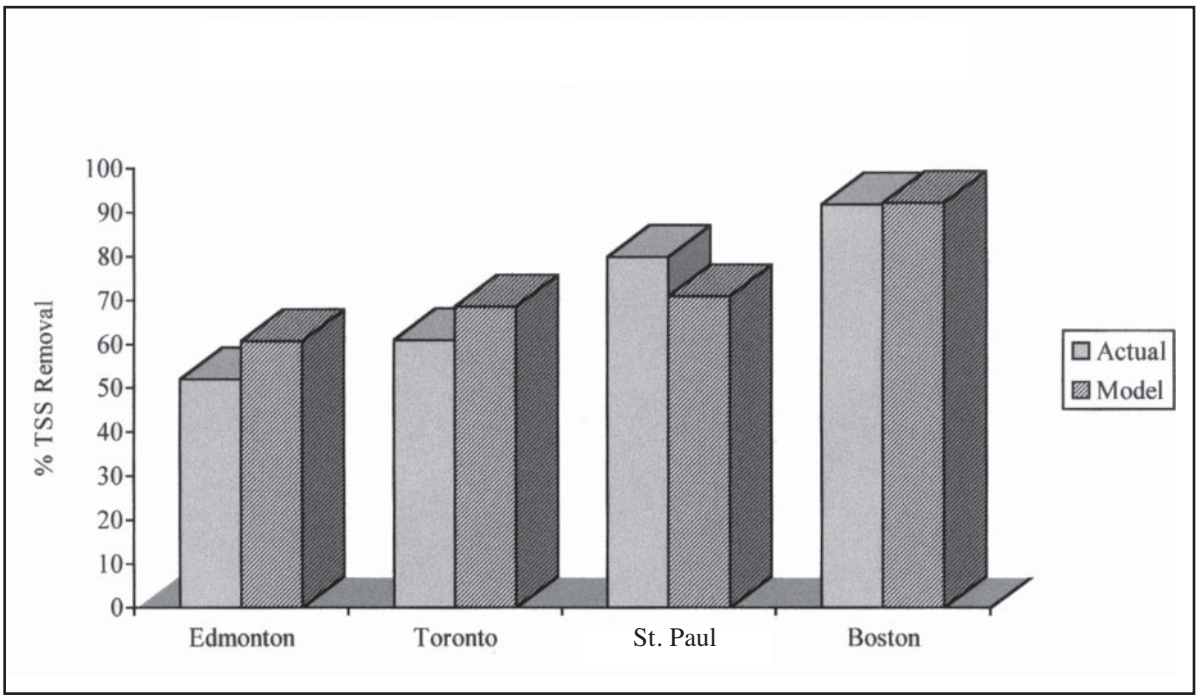

Figure 3. Comparison of Model Results to Field Monitoring

Free Oil (Spills) Capture

The results from the National Water Research Institute in Burlington indicate that free oil is retained in the Stormceptor for both dry weather spills and during minor storms (Marsalek, 1994). In a dry weather spill the latter portion of the spill will remain in the drop pipe. This oil will be purged into the Stormceptor during subsequent inflow to the separation chamber.

Based on API style calculations with a 150 μm oil globule (rise velocity of 0.005 ft/s) the oil will rise anywhere from 5" to 12" during peak flow conditions in the separation chamber depending on the size of unit implemented. These distances are based on the assumption that only half of the storage volume in the separator is used in the flow through zone. As such, the calculations and laboratory tests indicate that oil will be readily trapped since the outlet riser is the same elevation as the inlet riser.

2.2 Configuration of the Storm Drain System

The configuration of the storm sewer system is important since Stormceptor works most efficiently for small drainage areas and one influent pipe.

Inlet Configuration

The STC 450*i* is the smallest Stormceptor and is designed to replace a catch-basin (Figure 4). It has an open grate at the surface to allow water to enter the unit from above.

All of the other Stormceptor units are designed to replace a junction structure in a storm drain system (require a horizontal inlet pipe).

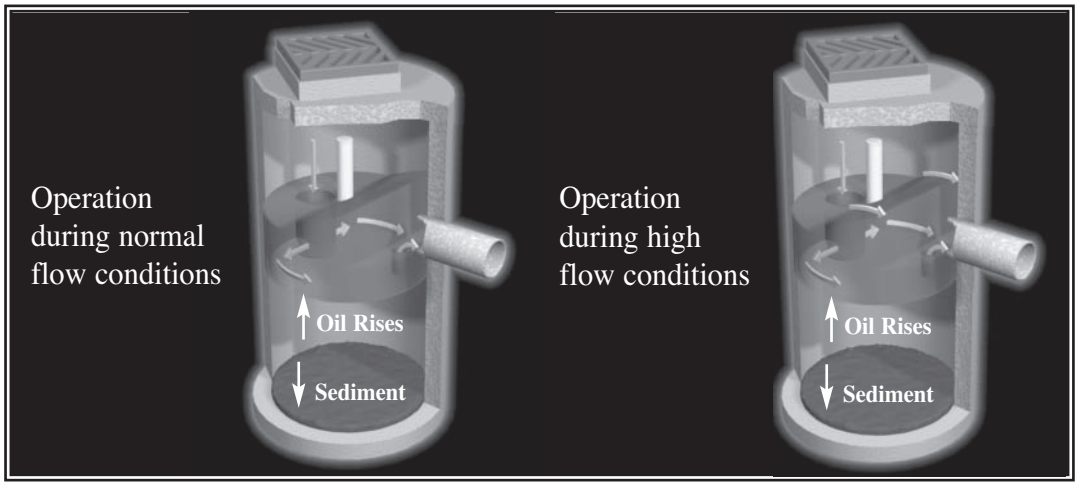

Figure 4 450*i* Inlet Stormceptor

In-Line Configuration

Stormceptor recommends that a one influent pipe - one outlet pipe arrangement be used in new development applications of the separator (Figure 5). This may require junction manholes upstream of the separator to provide this arrangement. The Stormceptor can be used as a bend structure as shown in Figure 6 without compromising oil and sediment removal effectiveness. Although additional hydraulic losses will occur as result of the bend, the hydraulics in the lower chamber will not be affected.

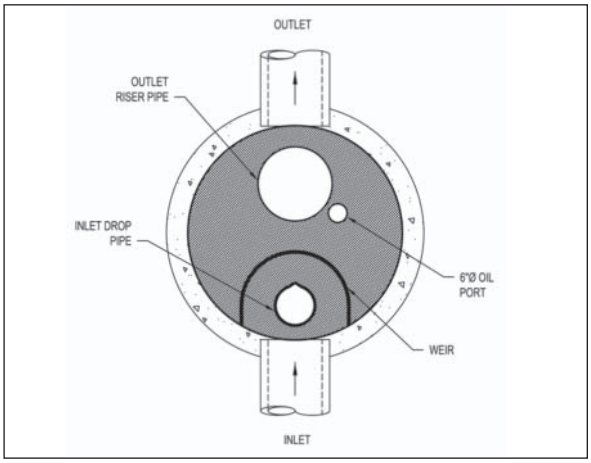

Figure 5 Typical Stormceptor Configuration

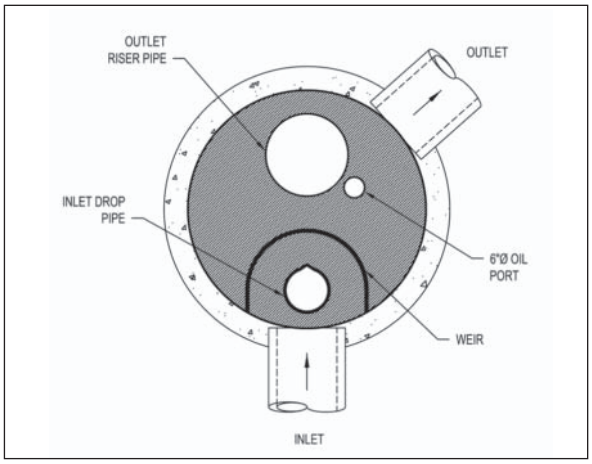

Figure 6 Stormceptor as a Bend Structure

In situations where it is not feasible to have one inlet pipe to the Stormceptor (i.e. existing storm drain applications, location of other infrastructure/utilities, etc.), it is possible to accommodate several influent pipes with a modified diversion/by-pass configuration (Figure 7). The elevation difference between the inlet and outlet pipes for the multiple inlet design is 3". It is recommended that a maximum of two inlet pipes be implemented into a Stormceptor in a new development application.

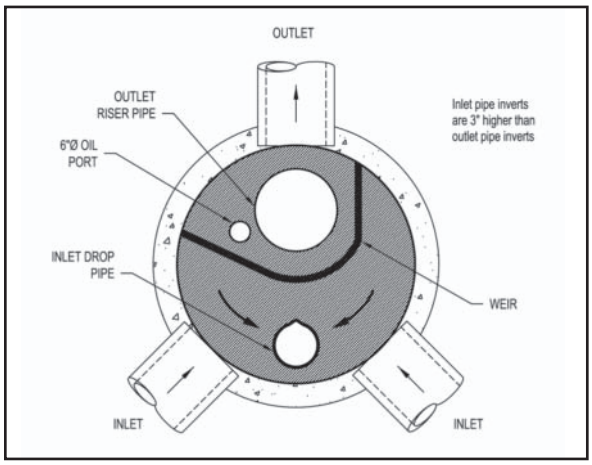

Figure 7. Multiple Inlets to Stormceptor

Series Configuration

The series Stormceptor configuration requires a one inlet - one outlet pipe arrangement. The series Stormceptor is able to treat larger drainage areas by splitting the flow into two circular structures. If the series Stormceptor is to be used as a bend structure then only the outlet pipe in the second unit can be deflected to accomplish the change in direction.

Submerged Configuration

Stormceptor also has a design that can accommodate a partially or fully submerged pipe application. Submergence is common in areas close to lakes, coastal areas and areas with high groundwater tables. The insert in these applications has a custom weir height and second drop pipe as shown in Figure 8. Both the weir height and height of the second drop pipe are site specific depending on the level of submergence. The second drop pipe elevation corresponds to the actual submergence elevation while the weir is built to be 9" higher than the submergence elevation.

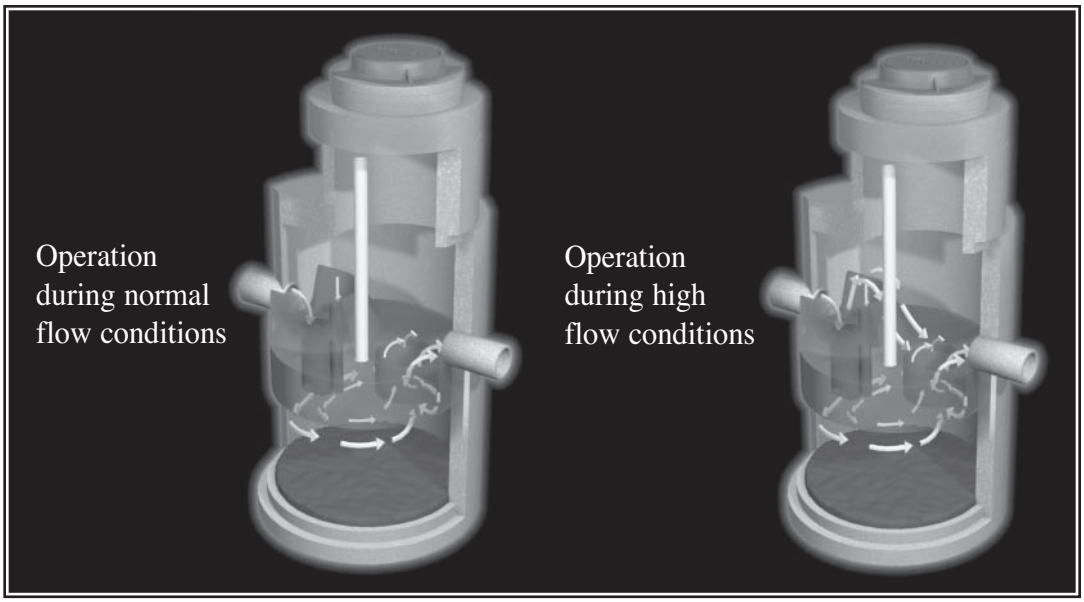

Figure 8. Submerged Stormceptor Design

By-Pass Chamber

The by-pass chamber is available in two diameters 6' diameter and 8' diameter. Table 4 indicates the maximum pipe diameters that can be implemented with the two by-pass chamber sizes currently being manufactured. The largest pipe that can currently be accommodated in the 8' diameter by-pass chamber is a 60" I.D. concrete pipe. These pipes represent what can physically fit into the Stormceptor and are considerably larger than the pipe sizes that would be used if properly sized for new development applications (i.e. retrofit). Pipes with an inside diameter greater than 42" require customization of the 6' diameter insert.

Table 4. Influent and Effluent Pipe Diameters (Concrete)

Insert Size	**One influent and one effluent pipe 180˚ apart**	**Two influent pipes 90˚ apart and one effluent pipe**	
Insert Diameter	Pipe Diameter	Influent Diameter	Effluent Diameter
4'	24"	18"	24"
6'	42"	33"	42"
8'	60"	42"	60"

2.3 Location in the Storm Drain System

Stormceptor is designed to accommodate everyday flows. These frequent flows are the most important since all storm water events contribute pollution. The frequency of the magnitude of a flow rate is dependent on the upstream drainage area and the level of imperviousness of that drainage area. If the drainage area is too large, the Stormceptor will by-pass more frequently. Accordingly, it is better that the Stormceptor unit is implemented on local or lateral storm drains rather than trunk storm sewers for new development applications (Figure 9).

This may not be possible for many retrofit or redevelopment designs, and in these cases a reduction in water quality performance must be accepted. The implementation of a Stormceptor in retrofit and redevelopment applications is important, since they can provide significant enhancement (i.e. to remove storm water bedload sediments) at a small cost in situations where there are few economical options for treatment.

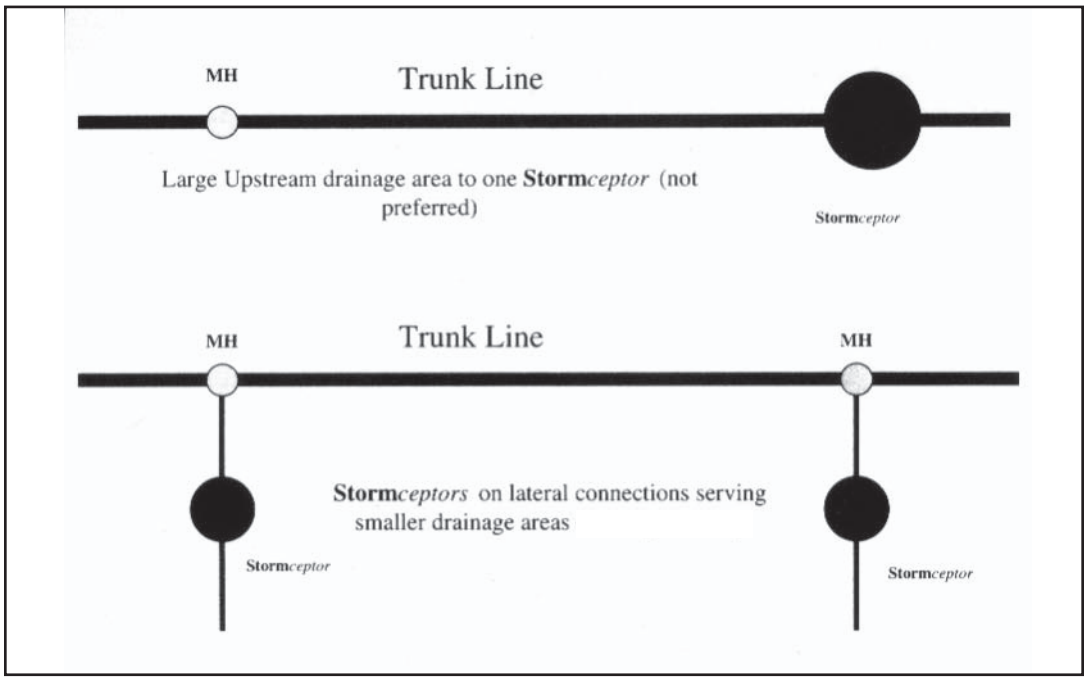

Figure 9. Stormceptor Location

2.4 Technical Specifications

The Stormceptor dimensions vary with the size of unit that is specified. Dimensions of the concrete Stormceptor units are provided in Table 5.

Table 5. Stormceptor Dimensions *

Model	Treatment Chamber Diameter	Pipe Invert to Bottom of Base Slab
450*i*	4'	68"
900	6'	63"
1200	6'	79"
1800	6'	113"
2400	8'	104"
3600	8'	144"
4800	10'	140"
6000	10'	162"
7200	12'	148"
11000*s***	10'	140"
13000*s***	10'	162"
16000*s***	12'	148"

* Depths are approximate
** Two vertical structures

Storage capacities for Stormceptor are provided in Table 6. The STCs series consists of two vertical structures, storage capacities represent the total storage for both chambers.

Table 6. Stormceptor Capacities

Model	Down Pipe Orifice	*Sediment Capacity (ft^3)	Oil Capacity (US Gal.)	Total (US Gal.)
450*i*	6	9	86	470
900	6	19	251	952
1200	6	25	251	1234
1800	6	37	251	1833
2400	8	49	840	2462
3600	8	75	840	3715
4800	10	101	909	5059
6000	10	123	909	6136
7200	12	149	1059	7420
11000*s*	10	224**	2797**	11194**
13000*s*	10	268**	2797**	13348**
16000*s*	12	319**	3055**	15918**

* Capacity prior to recommended maintenance
** Total both structures combined

The different flow rates are achieved by manipulating the down pipe orifice diameter. The weir directing the flow through the lower treatment chamber is manufactured at a constant height of 8" for all of the units. Since the outlet is 1" lower than the inlet, a total potential head of 9" is available to convey flow through the lower treatment chamber before overflow conditions occur. The orifice diameter for each size of Stormceptor is shown in Table 6.

The by-pass flow rate is simply a function of head over the overflow weir.

Table 7. By-Pass Flow Rate

Head (in)	STC 450*i* (cfs)	STC 900-7200 (cfs)	STC 11000*s*-16000*s* (cfs)
1	0.20	0.36	0.56
2	0.55	1.01	1.56
4	1.54	2.87	4.45
6	2.85	5.35	8.31
8	4.44	8.37	13.05
10	6.27	11.90	18.60
12	8.33	15.91	24.94
15	11.82	22.79	35.87
18	15.74	30.67	48.47
21	20.06	39.53	62.73

Digital AutoCad drawings for all of the Stormceptor models are available from the Rinker Materials Stormceptor office at (800) 909-7763 or at www.rinkerstormceptor.com.

2.5 Design Parameters

There are some standard design parameters that must be provided in any storm drain design with a Stormceptor installation.

Inlet / Outlet Elevation Difference

Inlet Stormceptor
There is a three inch difference in elevation between the inlet invert and outlet invert in the Inlet Stormceptor (450i).

In-Line Stormceptor:
There is a one inch difference in elevation between the inlet invert and the outlet invert in an In-Line Stormceptor designed for one inlet. There is a three inch difference in elevation between the inlet invert and the outlet invert in an In-Line Stormceptor designed for multiple inlets. Storm drain designs must accommodate this elevation difference.

Series Stormceptor
The STCs Series Stormceptor consists of two treatment chambers connected by piping. Each circular chamber has a one inch difference in elevation between the inlet invert and the outlet invert. Additionally, there is a one inch drop between each structure, for a total drop of three inches.

Influent and Effluent Pipe Diameter

In most cases, flexible rubber boots are used to facilitate the installation of the influent/effluent pipes to the Stormceptor. These boots are installed in the by-pass chamber section at the Rinker Materials manufacturing facility. Boots are available for pipe sizes with an O.D. (outside diameter) up to 44" (36" concrete I.D.).

The influent/effluent pipes can be grouted/mortared in the concrete Stormceptor if desired. Pipes up to 24" in diameter can be grouted without any special preparation. Larger pipe diameters will need to be modified to fit the curvature of the Stormceptor.

Head Loss Through the Stormceptor

The measured head loss through the Stormceptor is approximately equal to a 60˚ bend at a manhole. An appropriate K value to use in calculating minor losses through the storm drain system for a Stormceptor unit would be 1.3 (Minor Loss = $1.3\ v^2/2g$).

Installation Depth

There is a minimum inlet crown (inside top of pipe) to grade elevation required to physically implement the In-Line Stormceptor due to the modular construction of the structure. The minimum crown to grade elevation is 24", depending on pipe size and material. Flexible couplings cannot be supplied for shallow concrete Stormceptor applications. The maximum installation depth (from finish grade to influent pipe invert) for the precast concrete Stormceptor is 33 feet.

Stormceptor installations at depths greater than those noted above will require custom manufacturing. Rinker Materials should be consulted for recommendations in these instances.

3.0 Installation Procedures

The installation of the concrete Stormceptor should conform in general to state highway, provincial or local specifications for the construction of manholes. Selected sections of a general specification that are applicable are summarized in the following sections.

Excavation

Excavation for the installation of the Stormceptor should conform to state highway, provincial or local specifications. Topsoil that is removed during the excavation for the Stormceptor should be stockpiled in designated areas and should not be mixed with subsoil or other materials. Topsoil stockpiles and the general site preparation for the installation of the Stormceptor should conform to state highway, provincial or local specifications.

The Stormceptor should not be installed on frozen ground. Excavation should extend a minimum of 12" from the precast concrete surfaces plus an allowance for shoring and bracing where required. If the bottom of the excavation provides an unsuitable foundation additional excavation may be required. In areas with a high water table, continuous dewatering should be provided to ensure that the excavation is stable and free of water.

Backfilling

Backfill material should conform to state highway, provincial or local specifications. Backfill material should be placed in uniform layers not exceeding 12" in depth and compacted to state highway, provincial or local specifications.

Stormceptor Installation Sequence

The concrete Stormceptor is installed in sections in the following sequence:

1. aggregate base
2. base slab
3. treatment chamber section(s)
4. transition slab (if required)
5. by-pass section
6. connect inlet and outlet pipes
7. riser section and/or transition slab (if required)
8. maintenance riser section(s) (if required)
9. frame and access cover

The precast base should be placed level at the specified grade. The entire base should be in contact with the underlying compacted granular material. Subsequent sections, complete with joint seals, should be installed in accordance with the licensed precast concrete manufacturer's recommendations.

Adjustment of the Stormceptor can be performed by lifting the upper sections free of the excavated area, re-leveling the base, and re-installing the sections. Damaged sections and gaskets should be repaired or replaced as necessary.

Down Pipe and Riser Pipe

Once the by-pass section has been attached to the lower treatment chamber, the inlet down pipe, and outlet riser pipe must be attached. Pipe installation instructions and required materials are provided with the insert.

Inlet and Outlet Pipes

Inlet and outlet pipes should be securely set into the by-pass chamber using grout, boots, or approved pipe seals so that the structure is watertight. Boots are normally used and installed at the precast concrete plant prior to shipping. Boots are applicable for pipes with an outside diameter up to 44". Installation of the boots should follow the manufacturer's recommendations. The following procedure should be followed to attach the inlet and outlet pipes at the Stormceptor:

1. Center the pipe in the boot opening
2. Lubricate the outside of the pipe and/or inside of the boot if the pipe outside diameter is the same as the inside diameter of the boot
3. Position the pipe clamp in the groove of the boot with the screw at the top
4. Tighten the pipe clamp screw per manufacturers requirement
5. On minimum outside diameter installations lift the boot such that it contacts the bottom of the pipe while tightening the pipe clamp to ensure even contraction of the rubber.
6. Move the pipe horizontally and/or vertically to bring it to grade

Frame and Cover Installation

Precast concrete adjustment units should be installed to set the frame and cover at the required elevation. The adjustment units should be laid in a full bed of mortar with successive units being joined using sealant recommended by the manufacturer. Frames for the cover should be set in a full bed of mortar at the elevation specified. Orientation of the frame and cover must allow access to the 24" oulet riser pipe as well as the oil inspection port.

4.0 Stormceptor Maintenance Guidelines

The performance of all storm water quality measures decrease as they fill with sediment. Although the maintenance frequency will be site specific, Rinker Materials generally recommends annual maintenance be performed or when the sediment volume in the unit reaches 15% of the total storage. This recommendation is based on several factors:

- Minimal performance degradation due to sediment build-up.
- Sediment removal is easier when removed on a regular basis (as sediment builds up it compacts and solidifies making maintenance more difficult).
- Development of a routine maintenance interval helps ensure a regular maintenance schedule is followed. Although the frequency of maintenance will depend on site conditions, it is estimated that annual maintenance will be required for most applications; annual maintenance is a routine occurrence which is easy to plan for and remember.

Hydrocarbon Spills

In the event of any hazardous material spill, Rinker Materials recommends maintenance be performed immediately. Maintenance should be performed by a licensed liquid waste hauler. You should also notify the appropriate regulatory agencies as required.

4.1 Recommended Maintenance Procedure

Oil is removed through the 6" inspection/oil port and sediment is removed through the 24" diameter outlet riser pipe. Alternatively, oil could be removed from the 24" opening if water is removed from the treatment chamber, lowering the oil level below the drop pipes.

The depth of sediment can be measured from the surface of the Stormceptor with a dipstick tube equipped with a ball valve (Sludge Judge®). Rinker Materials recommends maintenance be performed once the sediment depth exceeds the guideline values provided in Table 8.

Table 8. Sediment Depths Indicating Required Maintenance*

Model	Sediment Depth
450*i*	8" (200 mm)
900	8" (200 mm)
1200	10" (250 mm)
1800	15" (375 mm)
2400	12" (300 mm)
3600	17" (425 mm)
4800	15" (375 mm)
6000	18" (450 mm)
7200	15" (375 mm)
11000*s*	17" (425 mm)**
13000*s*	20" (500 mm)**
16000*s*	17" (425 mm)**

* *Depths are approximate*
** *Depths in each structure*

No entry into the unit is required for routine maintenance of the Inlet Stormceptor or the smaller disc insert models of the In-Line Stormceptor. Entry to the level of the by-pass may be required for servicing the larger in-line models. Any potential obstructions at the inlet can be observed from the surface. The by-pass chamber has been designed as a platform for authorized maintenance personnel, in the event that an obstruction needs to be removed, drain flushing needs to be performed, or camera surveys are required.

Typically, maintenance is performed by the Vacuum Service Industry, a well established sector of the service industry that cleans underground tanks, sewers, and catch-basins. Costs to clean a Stormceptor will vary based on the size of the unit and transportation distances. If you need assistance for cleaning a Stormceptor unit, contact your local Rinker Materials representative, or the Rinker Materials Stormceptor Information Line at (800) 909-7763.

Disposal

The requirements for the disposal of material from a Stormceptor are similar to that of any other Best Management Practices (BMPs). Local guidelines should be consulted prior to disposal of the separator contents.

In most areas the sediment, once dewatered, can be disposed of in a sanitary landfill. It is not anticipated that the sediment would be classified as hazardous waste. In some areas, mixing the water with the sediment will create a slurry that can be discharged into a trunk sanitary sewer. In all disposal options, approval from the disposal facility operator/agency is required. Petroleum waste products collected in Stormceptor (oil/chemical/fuel spills) should be removed by a licensed waste management company.

Appendix A
Stormceptor CAD Drawings

CAD drawings are a typical representation for the Stormceptor Systems. Although design modifications are rare, they do occur. For the latest CAD drawings, please visit our website at www.rinkerstormceptor.com or by calling (800) 909-7763.
Rev. 3/2006

Appendix B
Stormceptor Weights

Appendix C
Stormceptor Patent Information

Appendix A

STC 450*i* Precast Concrete Stormceptor®
(450 US Gallon Capacity)

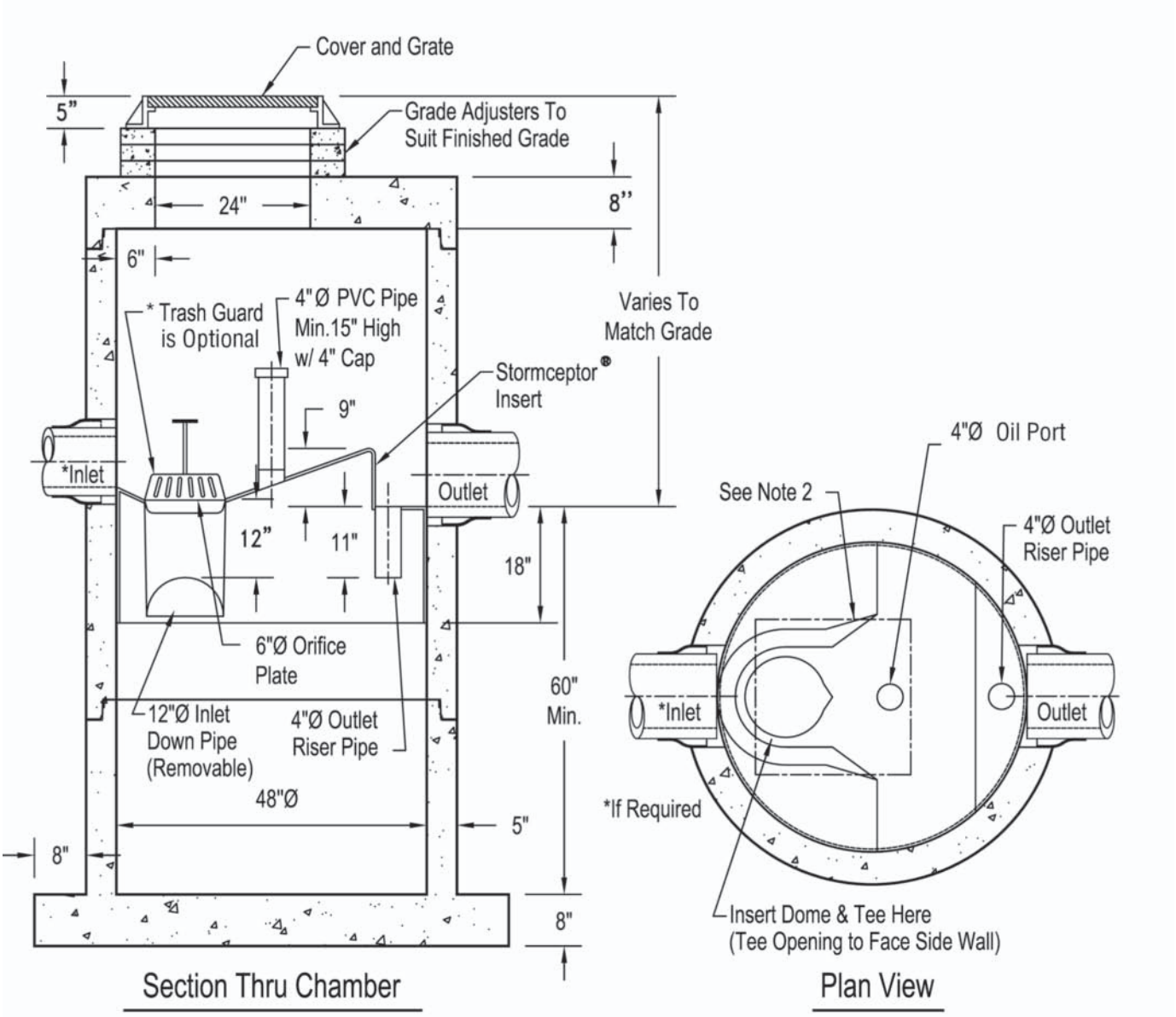

Notes:

1. The Use Of Flexible Connection is Recommended at The Inlet and Outlet Where Applicable.
2. The Cover Should be Positioned Over The Inlet Drop Pipe and The Oil Port.
3. The Stormceptor System is protected by one or more of the following U.S. Patents: #4985148, #5498331, #5725760, #5753115, #5849181, #6068765, #6371690.
4. Contact a Rinker Materials representative for further details not listed on this drawing.

Appendix A

STC 900 Precast Concrete Stormceptor®

(900 US Gallon Capacity)

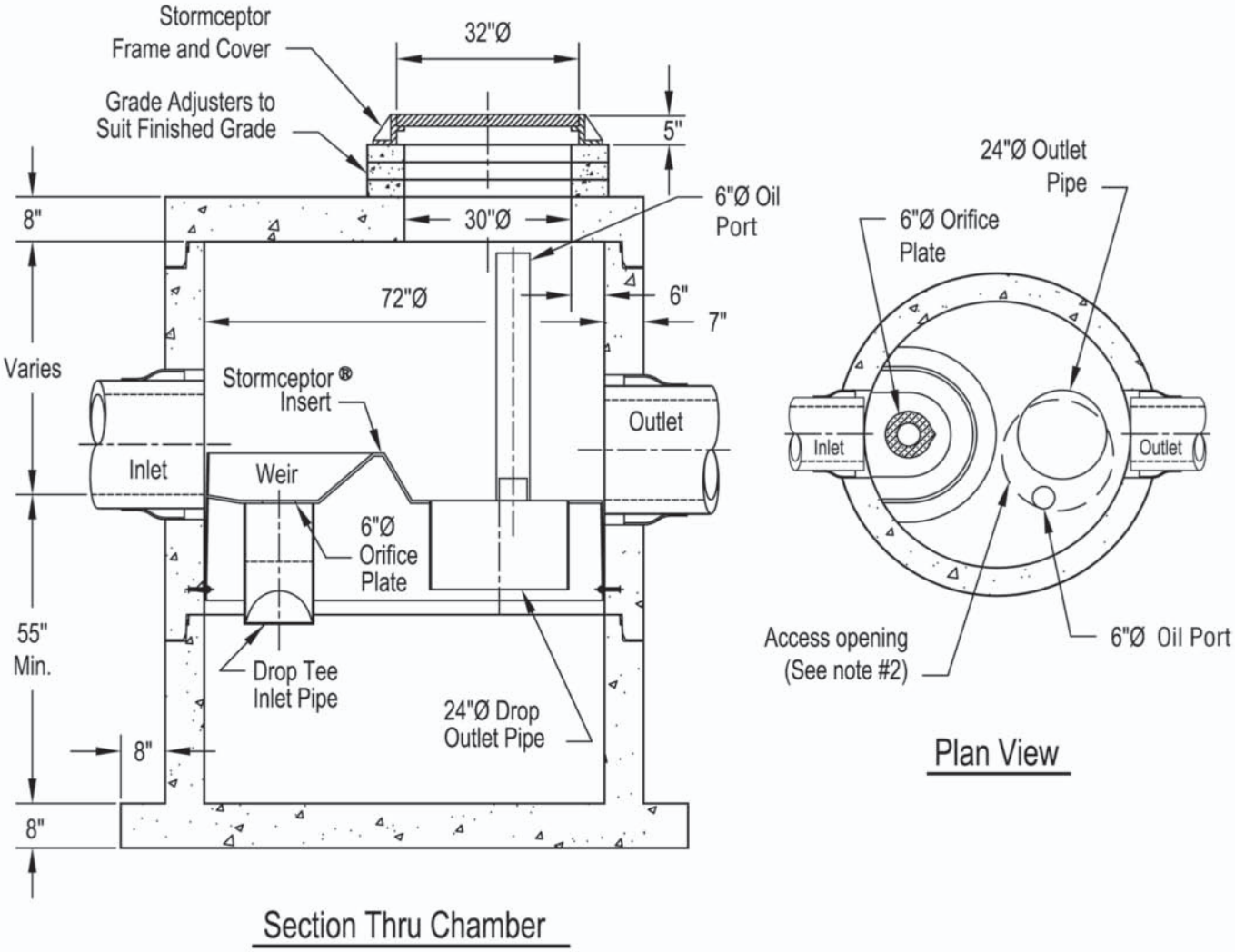

Notes:

1. The Use Of Flexible Connection is Recommended at The Inlet and Outlet Where Applicable.
2. The Cover Should be Positioned Over The Outlet Drop Pipe and The Oil Port.
3. The Stormceptor System is protected by one or more of the following U.S. Patents: #4985148, #5498331, #5725760, #5753115, #5849181, #6068765, #6371690.
4. Contact a Rinker Materials representative for further details not listed on this drawing.

Appendix A

STC 1200 Precast Concrete Stormceptor®

(1200 US Gallon Capacity)

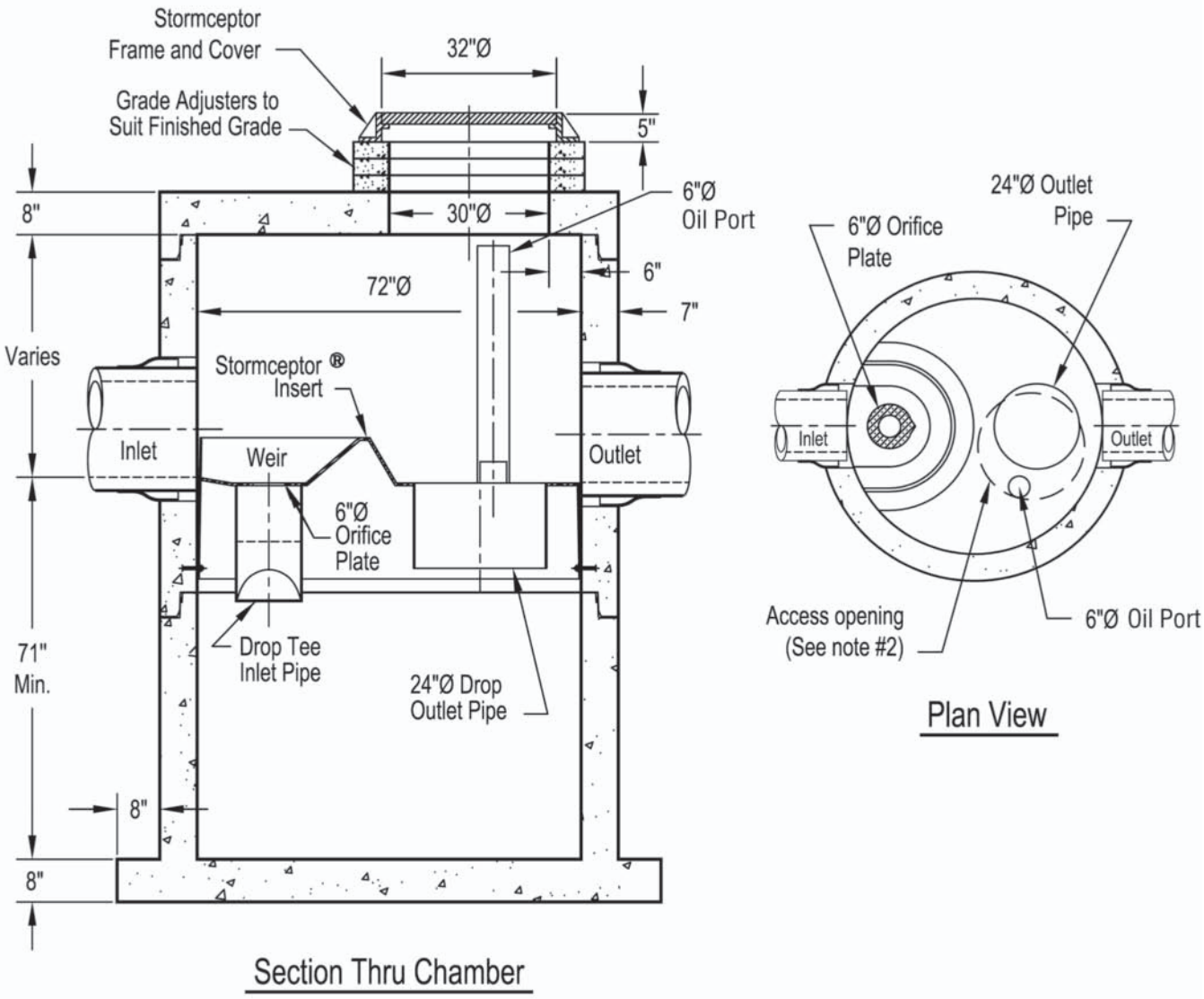

Notes:

1. The Use Of Flexible Connection is Recommended at The Inlet and Outlet Where Applicable.
2. The Cover Should be Positioned Over The Outlet Drop Pipe and The Oil Port.
3. The Stormceptor System is protected by one or more of the following U.S. Patents: #4985148, #5498331, #5725760, #5753115, #5849181, #6068765, #6371690.
4. Contact a Rinker Materials representative for further details not listed on this drawing.

Appendix A

STC 1800 Precast Concrete Stormceptor®

(1800 US Gallon Capacity)

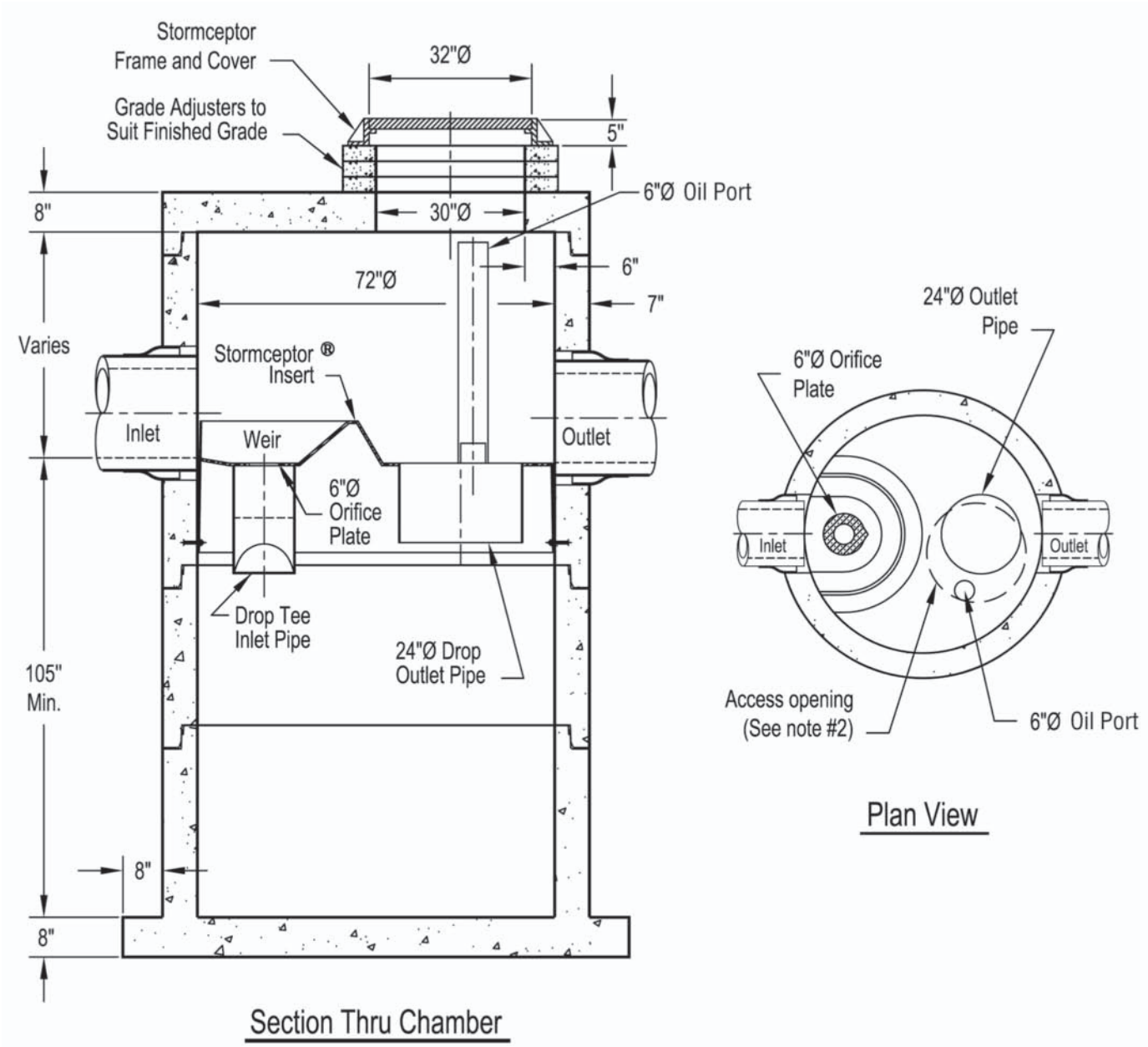

Notes:

1. The Use Of Flexible Connection is Recommended at The Inlet and Outlet Where Applicable.
2. The Cover Should be Positioned Over The Outlet Drop Pipe and The Oil Port.
3. The Stormceptor System is protected by one or more of the following U.S. Patents: #4985148, #5498331, #5725760, #5753115, #5849181, #6068765, #6371690.
4. Contact a Rinker Materials representative for further details not listed on this drawing.

Appendix A

STC 2400 Precast Concrete Stormceptor®

(2400 US Gallon Capacity)

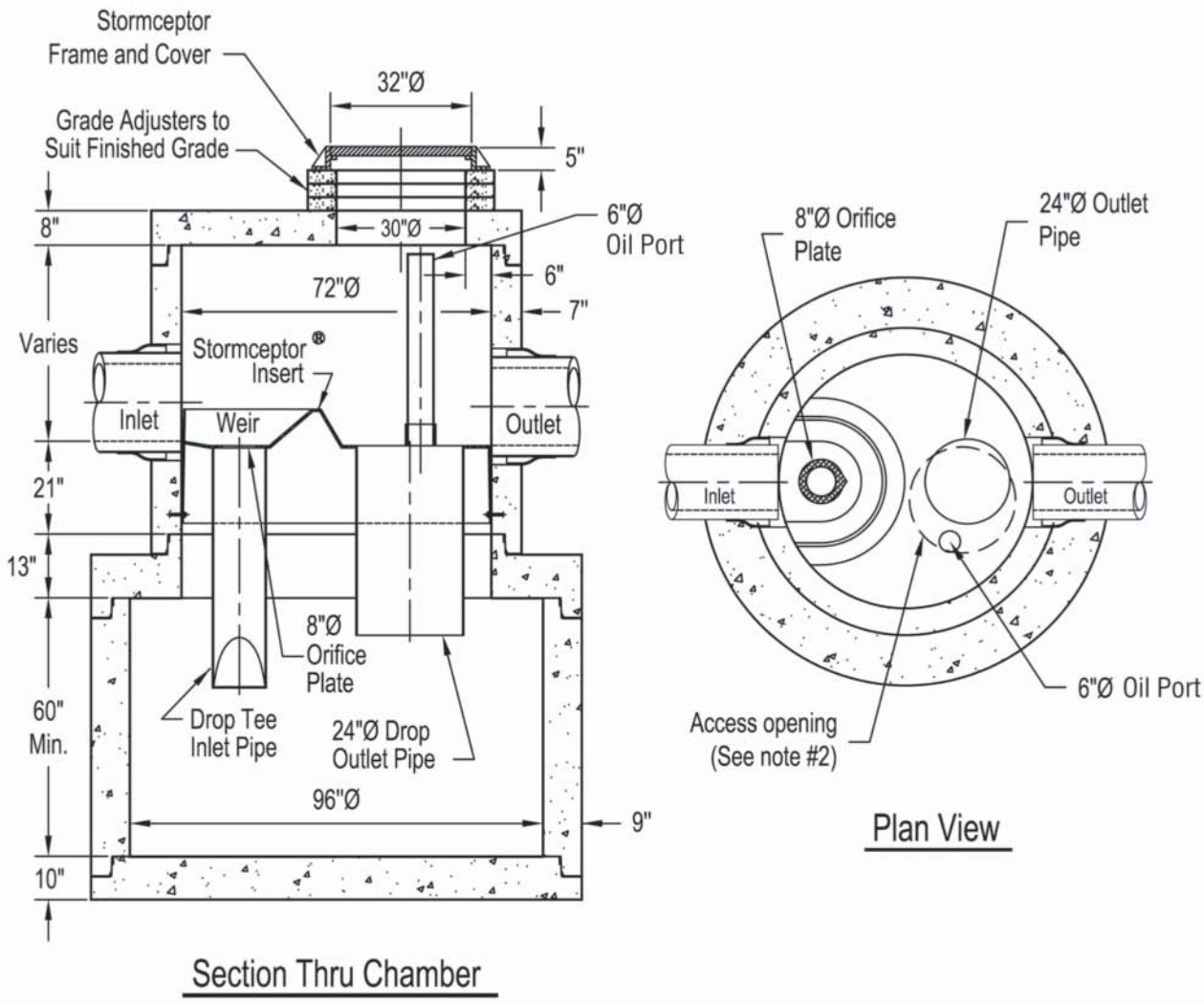

Notes:

1. The Use Of Flexible Connection is Recommended at The Inlet and Outlet Where Applicable.
2. The Cover Should be Positioned Over The Outlet Drop Pipe and The Oil Port.
3. The Stormceptor System is protected by one or more of the following U.S. Patents: #4985148, #5498331, #5725760, #5753115, #5849181, #6068765, #6371690.
4. Contact a Rinker Materials representative for further details not listed on this drawing.

Appendix A

STC 3600 Precast Concrete Stormceptor®

(3600 US Gallon Capacity)

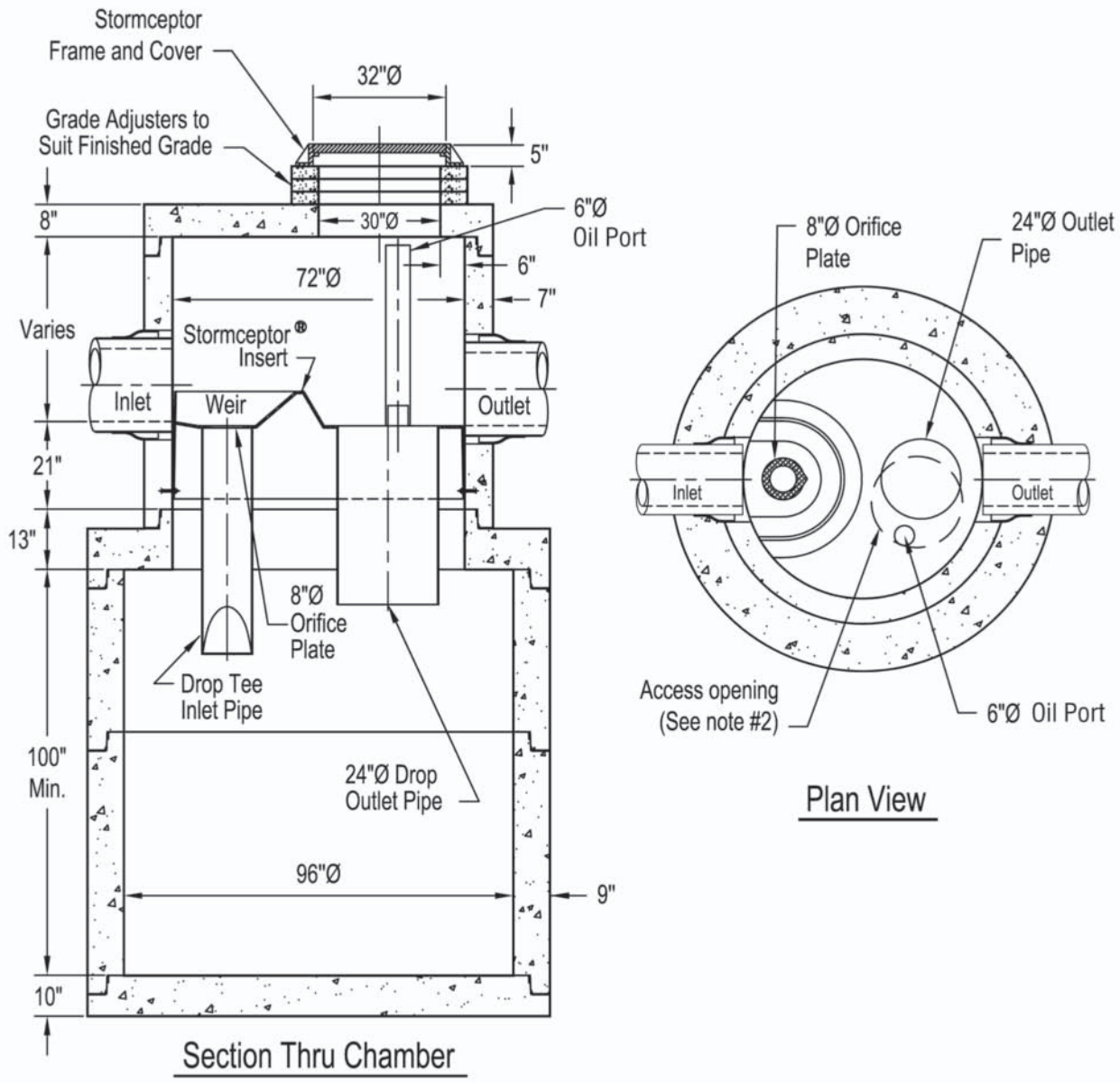

Notes:

1. The Use Of Flexible Connection is Recommended at The Inlet and Outlet Where Applicable.
2. The Cover Should be Positioned Over The Outlet Drop Pipe and The Oil Port.
3. The Stormceptor System is protected by one or more of the following U.S. Patents: #4985148, #5498331, #5725760, #5753115, #5849181, #6068765, #6371690.
4. Contact a Rinker Materials representative for further details not listed on this drawing.

Appendix A

STC 4800 Precast Concrete Stormceptor®

(4800 US Gallon Capacity)

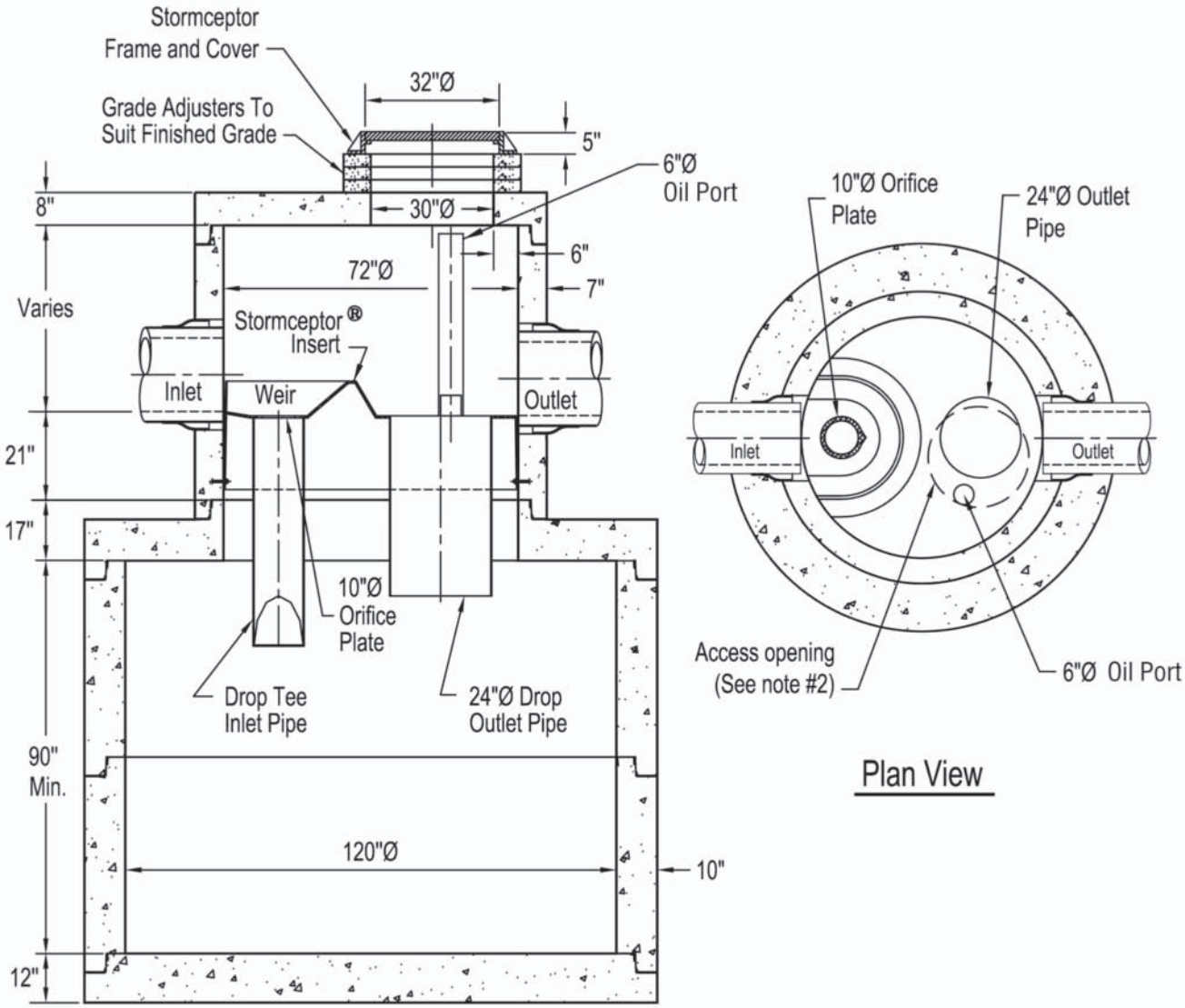

Notes:

1. The Use Of Flexible Connection is Recommended at The Inlet and Outlet Where Applicable.
2. The Cover Should be Positioned Over The Outlet Drop Pipe and The Oil Port.
3. The Stormceptor System is protected by one or more of the following U.S. Patents: #4985148, #5498331, #5725760, #5753115, #5849181, #6068765, #6371690.
4. Contact a Rinker Materials representative for further details not listed on this drawing.

Appendix A

STC 6000 Precast Concrete Stormceptor®

(6000 US Gallon Capacity)

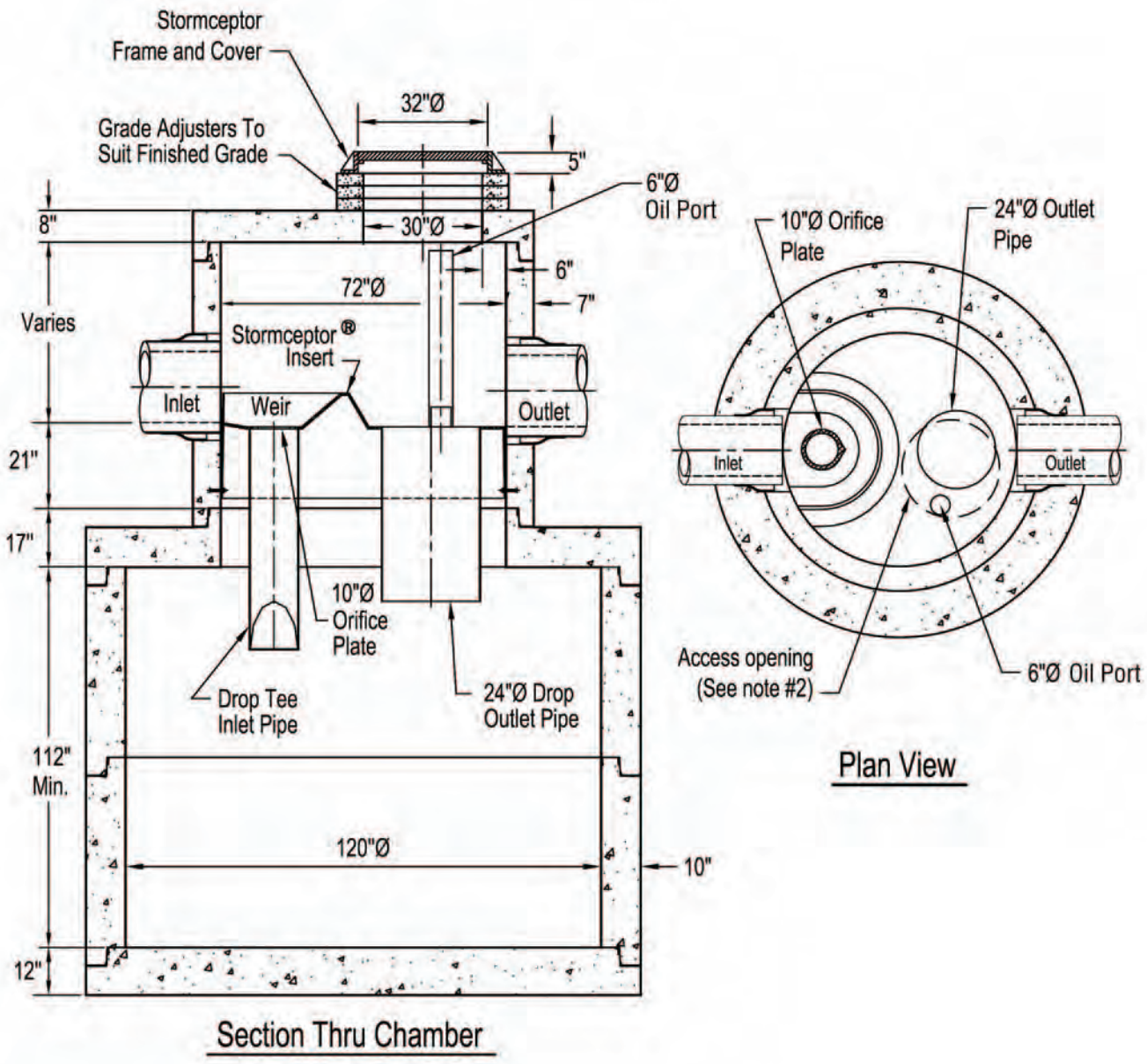

Notes:

1. The Use Of Flexible Connection is Recommended at The Inlet and Outlet Where Applicable.
2. The Cover Should be Positioned Over The Outlet Drop Pipe and The Oil Port.
3. The Stormceptor System is protected by one or more of the following U.S. Patents: #4985148, #5498331, #5725760, #5753115, #5849181, #6068765, #6371690.
4. Contact a Rinker Materials representative for further details not listed on this drawing.

Appendix A

STC 7200 Precast Concrete Stormceptor®

(7200 US Gallon Capacity)

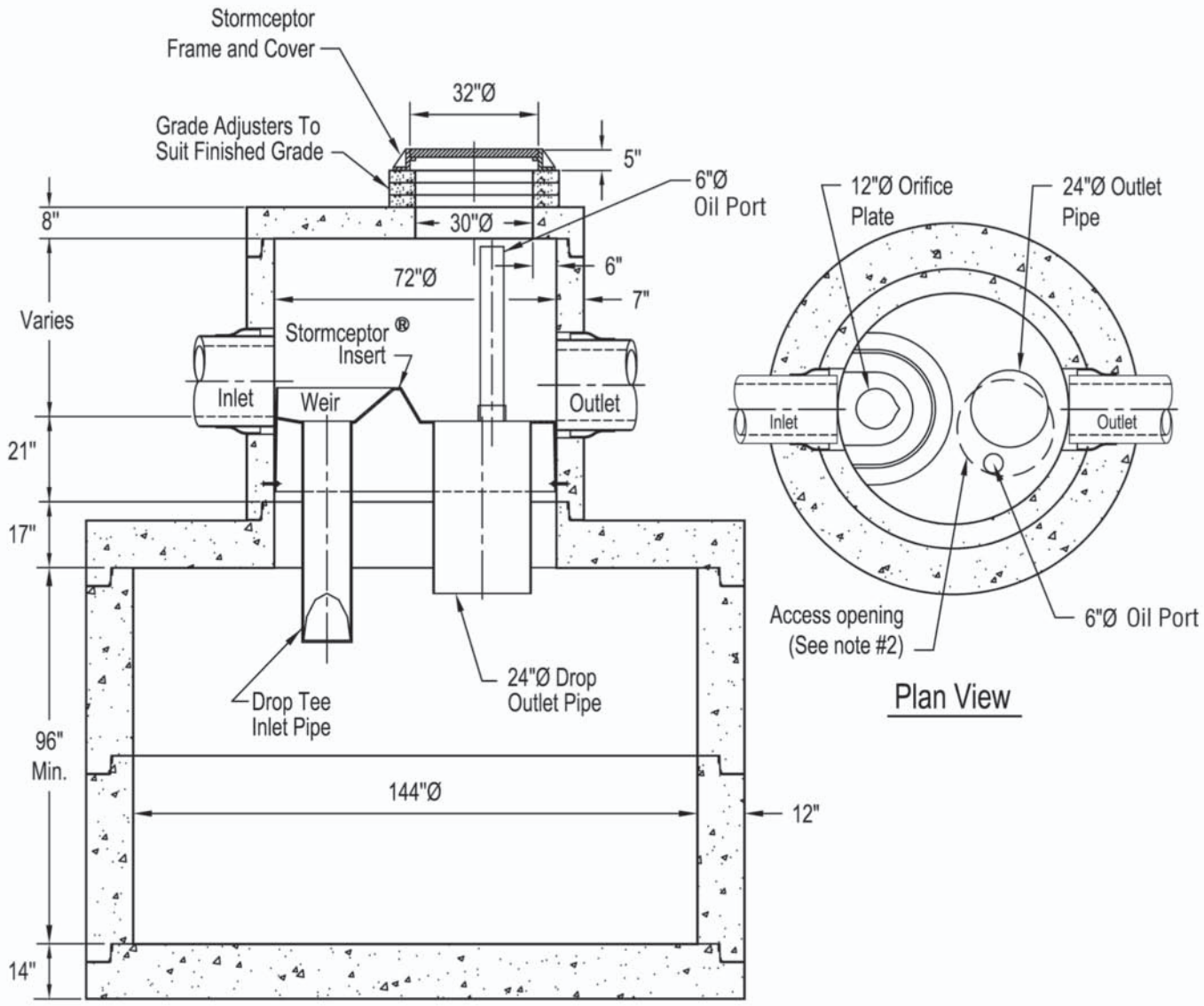

Notes:

1. The Use Of Flexible Connection is Recommended at The Inlet and Outlet Where Applicable.
2. The Cover Should be Positioned Over The Outlet Drop Pipe and The Oil Port.
3. The Stormceptor System is protected by one or more of the following U.S. Patents: #4985148, #5498331, #5725760, #5753115, #5849181, #6068765, #6371690.
4. Contact a Rinker Materials representative for further details not listed on this drawing.

Appendix A

STC 11000*s* Precast Concrete Stormceptor®
(11000 US Gallon Capacity)

(See plan view page 34.)

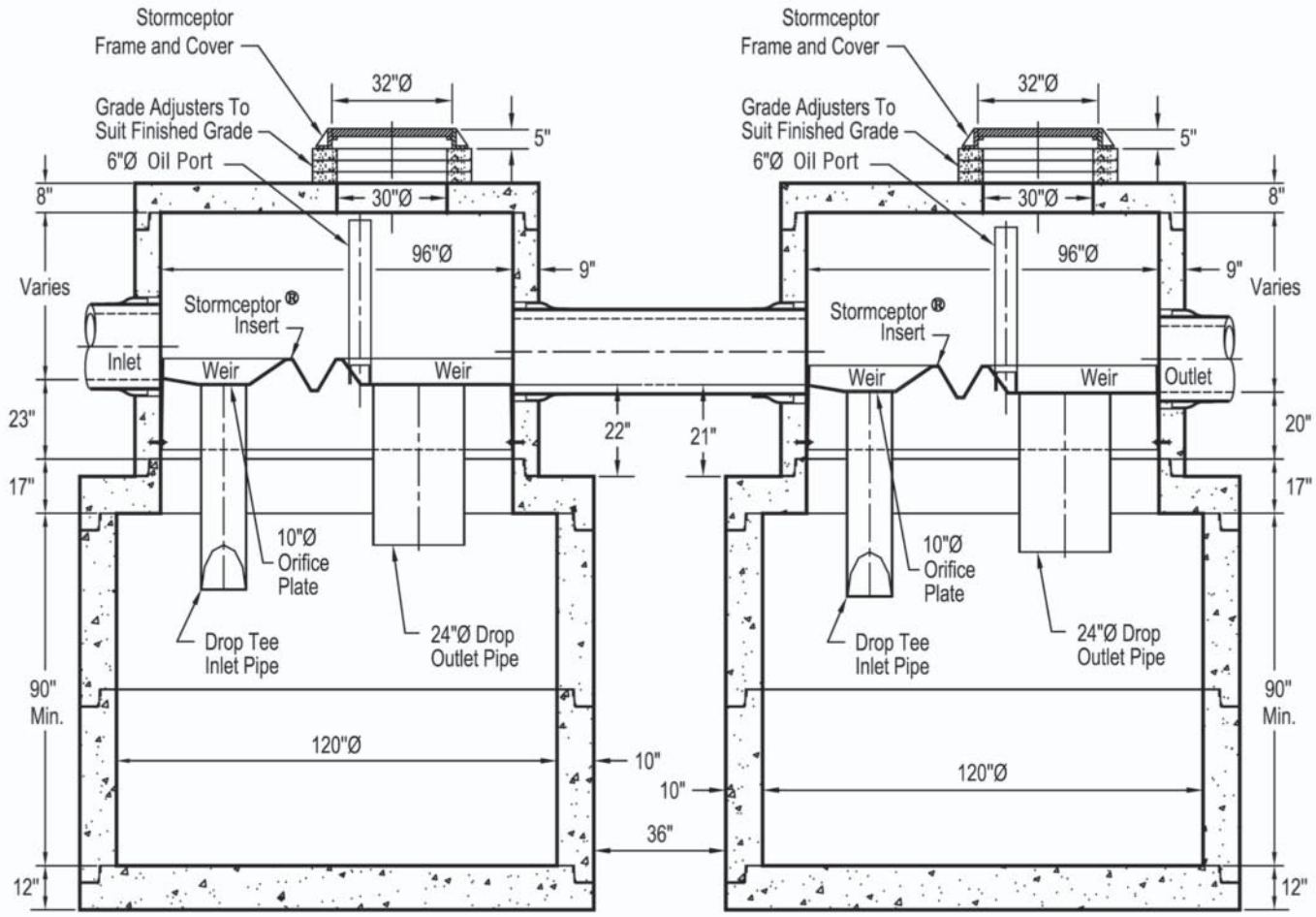

Section Thru Chambers

Notes:

1. The Use Of Flexible Connection is Recommended at The Inlet and Outlet Where Applicable.
2. The Cover Should be Positioned Over The Outlet Drop Pipe and The Oil Port.
3. The Stormceptor System is protected by one or more of the following U.S. Patents: #4985148, #5498331, #5725760, #5753115, #5849181, #6068765, #6371690.
4. Contact a Rinker Materials representative for further details not listed on this drawing.

Appendix A

STC 13000*s* Precast Concrete Stormceptor®
(13000 US Gallon Capacity)

(See plan view page 34.)

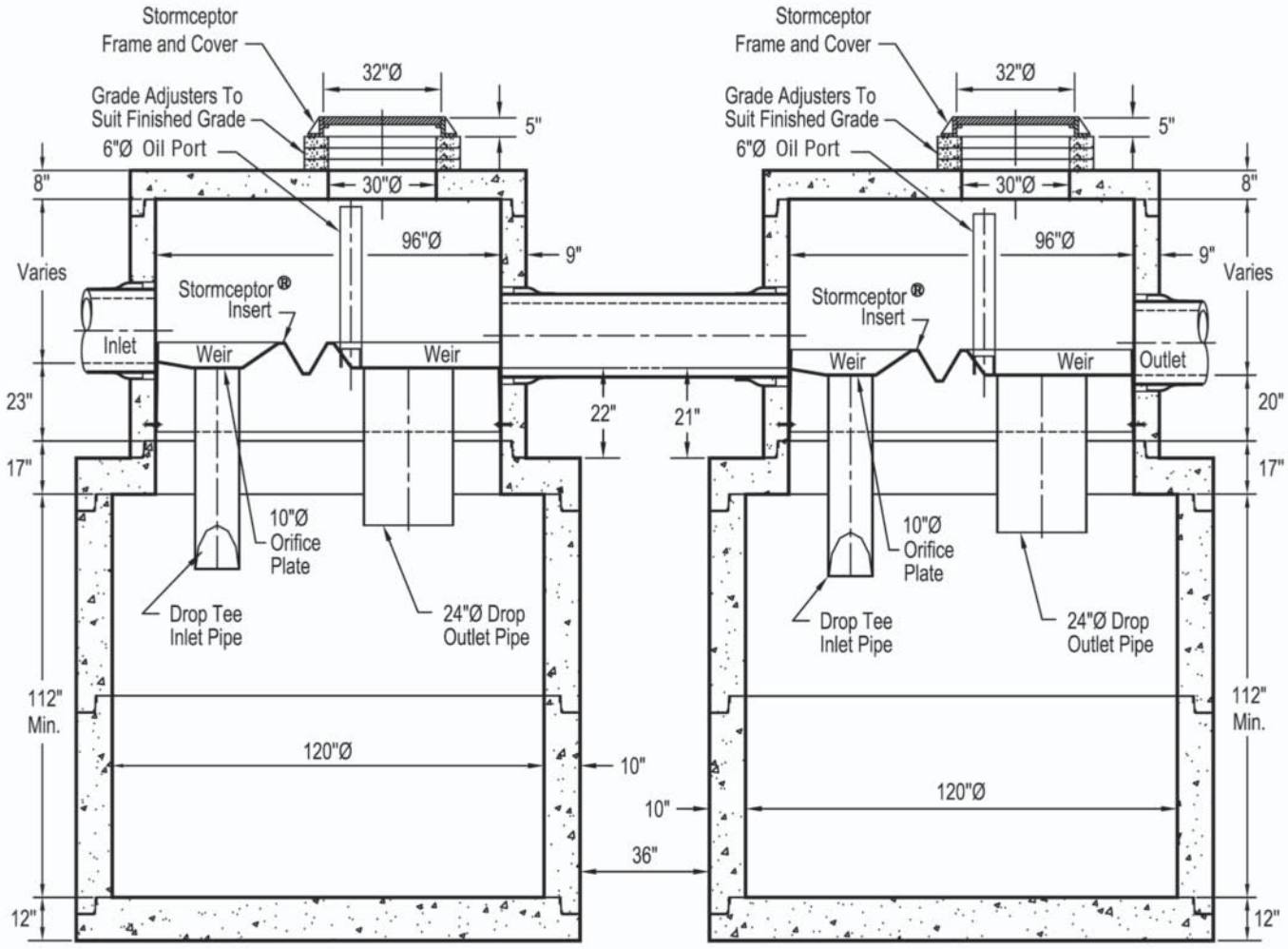

Section Thru Chambers

Notes:

1. The Use Of Flexible Connection is Recommended at The Inlet and Outlet Where Applicable.
2. The Cover Should be Positioned Over The Outlet Drop Pipe and The Oil Port.
3. The Stormceptor System is protected by one or more of the following U.S. Patents: #4985148, #5498331, #5725760, #5753115, #5849181, #6068765, #6371690.
4. Contact a Rinker Materials representative for further details not listed on this drawing.

Appendix A

STC 16000*s* Precast Concrete Stormceptor®
(16000 US Gallon Capacity)

(See plan view page 34.)

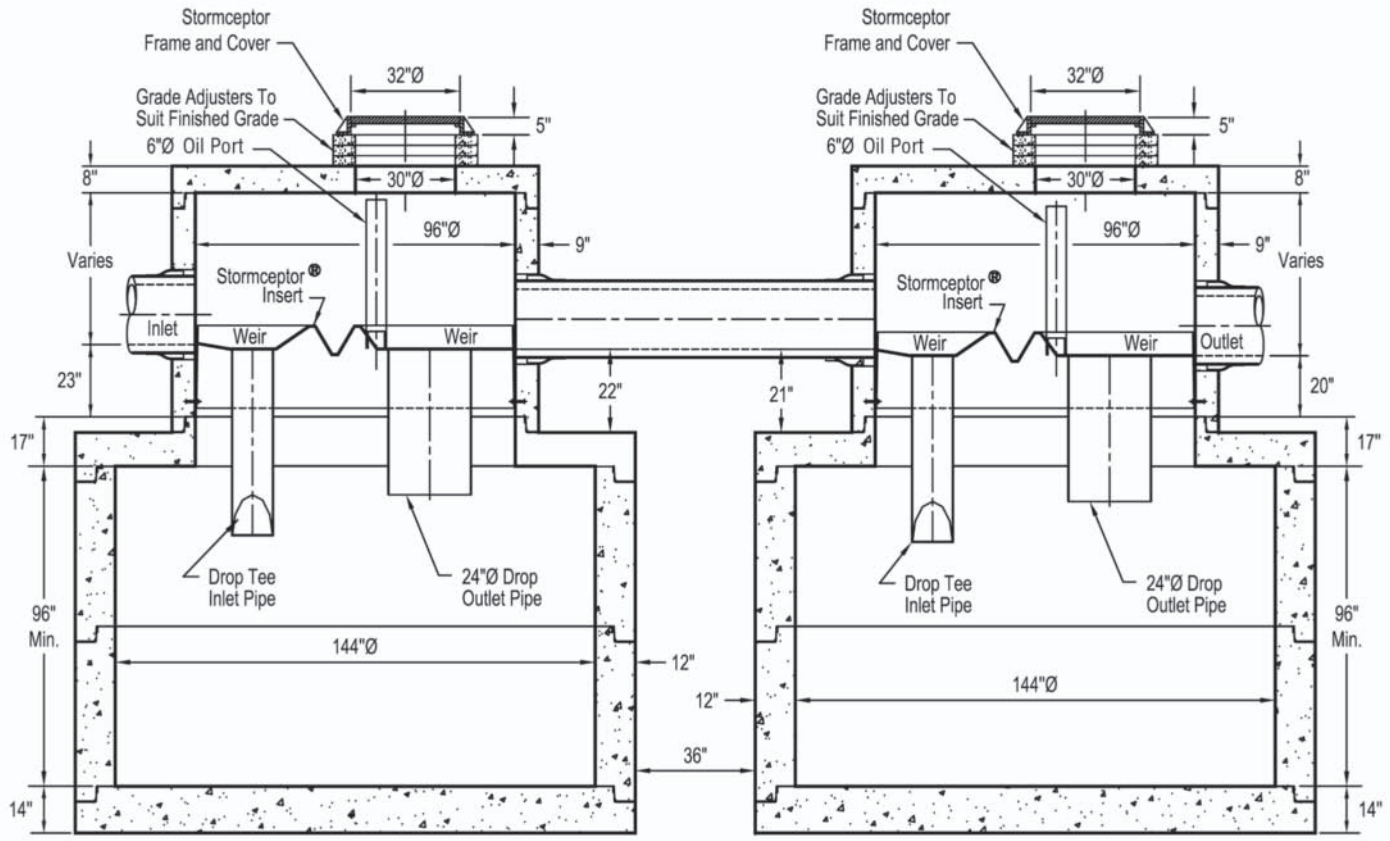

Section Thru Chambers

Notes:

1. The Use Of Flexible Connection is Recommended at The Inlet and Outlet Where Applicable.
2. The Cover Should be Positioned Over The Outlet Drop Pipe and The Oil Port.
3. The Stormceptor System is protected by one or more of the following U.S. Patents: #4985148, #5498331, #5725760, #5753115, #5849181, #6068765, #6371690.
4. Contact a Rinker Materials representative for further details not listed on this drawing.

Appendix A

Plan View
STC 11000*s*, STC 13000*s* and STC 16000*s*

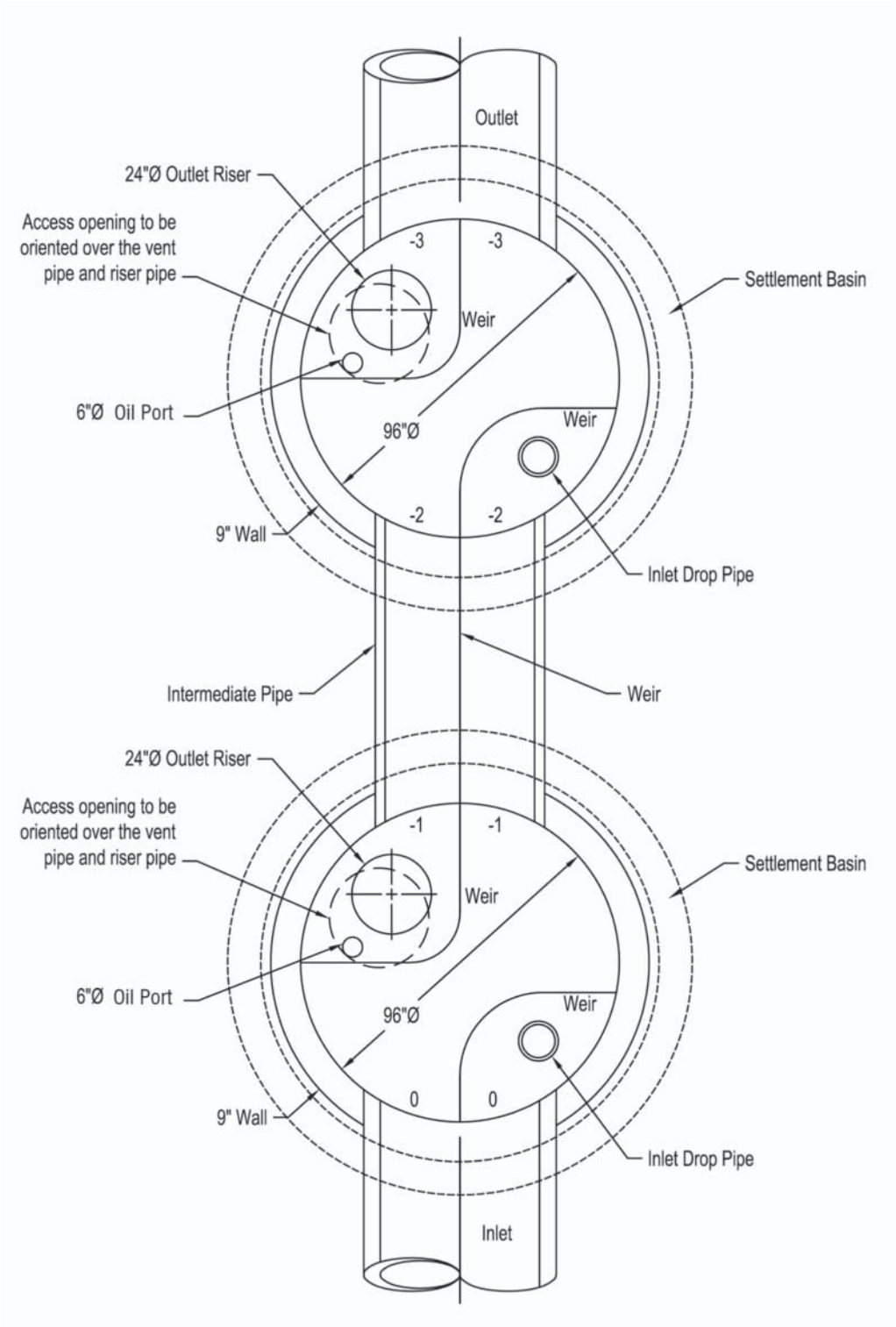

Appendix A

Stormceptor® Disc

Disc Type Insert Detail

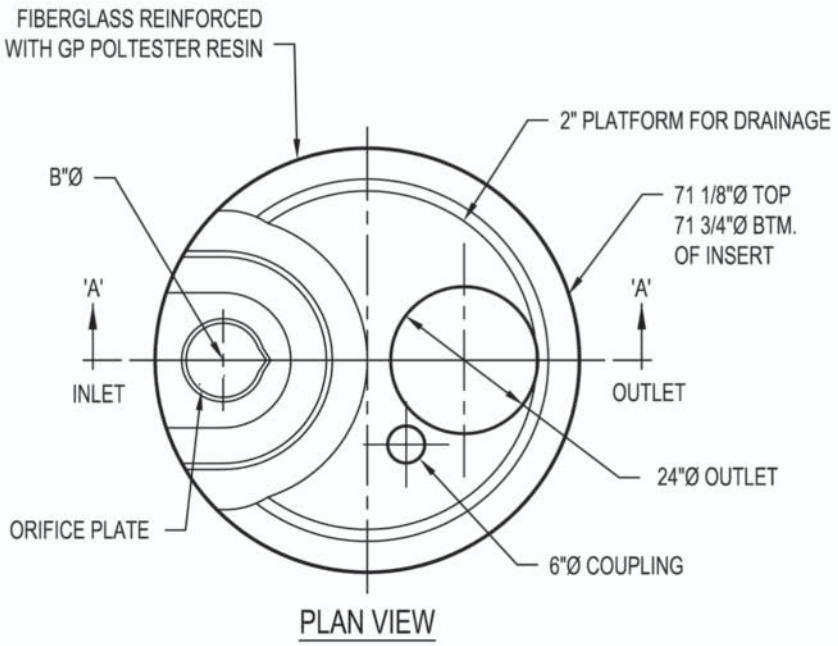

UNIT	A (in.)	BØ (in.)	C (in.)
STC 900	16	6	16
STC 1200	16	6	16
STC 1800	16	6	16
STC 2400	44	8	44
STC 3600	44	8	44
STC 4800	44	10	44
STC 6000	44	10	44
STC 7200	44	12	44

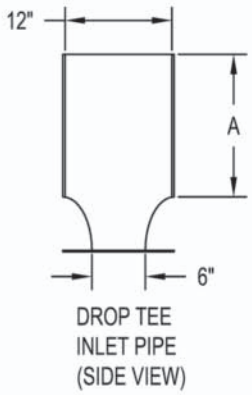

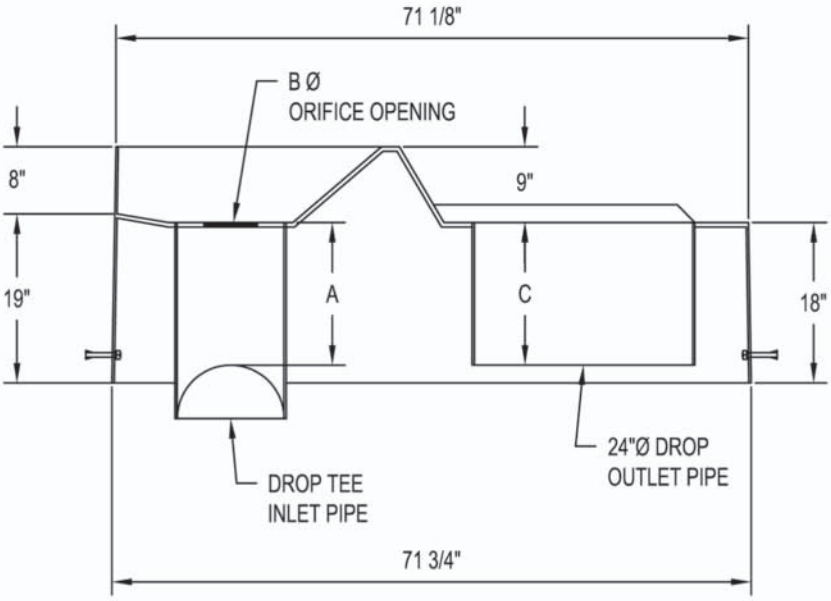

SECTION: 'A'-'A' THRU CHAMBER

Appendix A

Stormceptor® Submerged Disc Detail

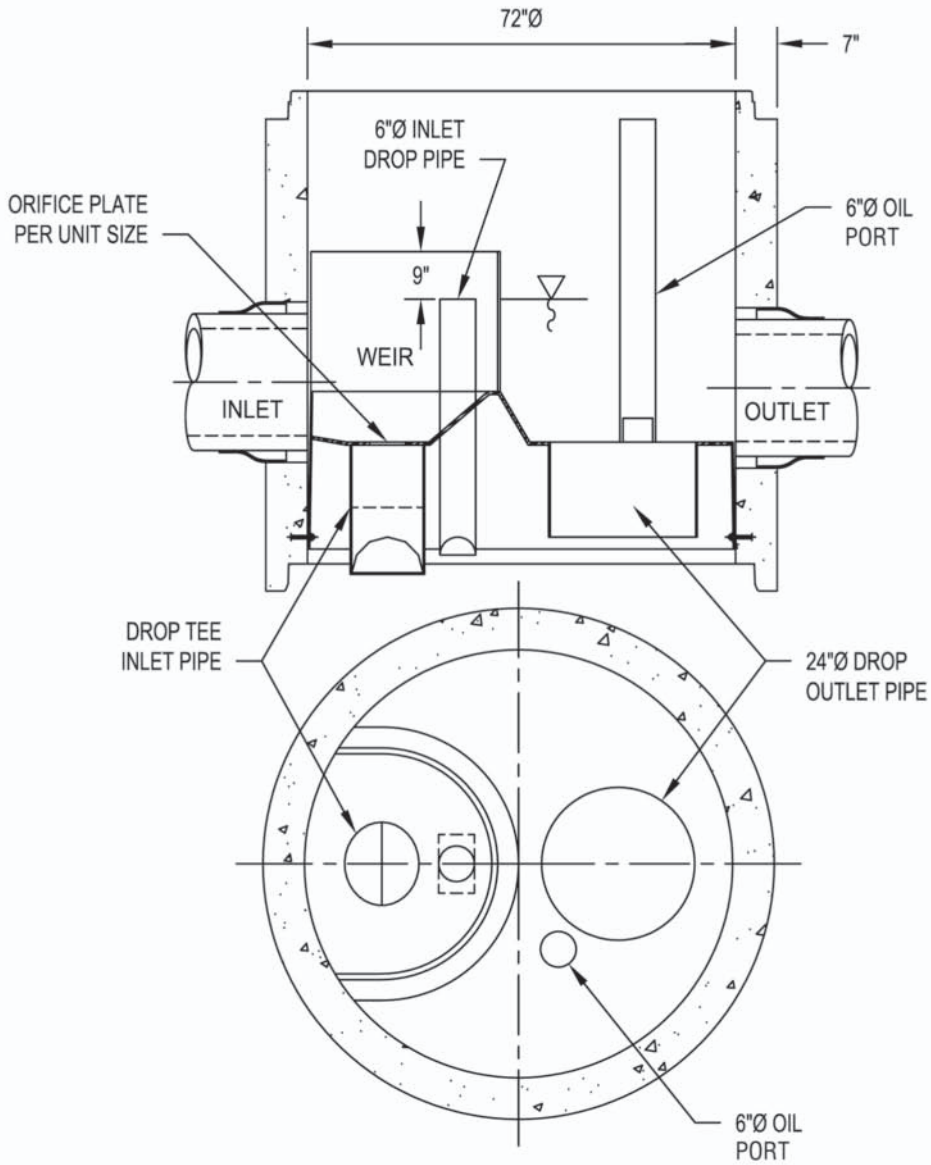

Notes:

1. The Top Of The 6"Ø Inlet Drop Pipe To Be Set At Elevation Of The Water Level.
2. The Top Of The Weir To Be Located 9" Above The Top Of 6" Inlet Drop Pipe.
3. The Stormceptor System is protected by one or more of the following U.S. Patents: #4985148, #5498331, #5725760, #5753115, #5849181, #6068765, #6371690.

Appendix B

Stormceptor Weights

Stormceptor	Weights		
STC 450*i*	Top Slab -	0.76 tons	*For total weight of base section add additional weight of height of 48"Ø riser attached to the base slab.
	48"Ø Riser -	0.44 tons/ft.	
	*Base Slab -	1.49 tons	
STC 900/STC 1200/STC 1800	Top Slab -	1.78 tons	**For total weight of base section add additional weight of height of 72"Ø riser attached to the base slab.
	72"Ø Riser -	0.91 tons/ft.	
	**Base Slab -	2.84 tons	
STC 2400/STC 3600	Top Slab -	1.78 tons	
	72"Ø Riser -	0.91 tons/ft.	
	Transition Slab -	2.13 tons	
	96"Ø Riser -	1.55 tons/ft.	
	Base Slab -	4.43 tons	
STC 4800/STC 6000	Top Slab -	1.78 tons	
	72"Ø Riser -	0.91 tons/ft.	
	Transition Slab -	5.90 tons	
	120"Ø Rise -	2.13 tons/ft.	
	Base Slab -	8.02 tons	
STC 7200	Top Slab -	1.78 tons	
	72"Ø Riser -	0.91 tons/ft.	
	Transition Slab -	9.43 tons	
	144"Ø Riser -	3.06 tons/ft.	
	Base Slab -	13.47 tons	
STC 11000/STC 13000/STC 16000	Top Slab -	3.30 tons	*Transition Slab for STC 11000/STC 13000
	96"Ø Riser -	1.55 tons/ft.	
	*Transition Slab -	4.25 tons	
	**Transition Slab -	7.78 tons	** Transition Slab for STC 16000
	144"Ø Riser -	3.06 tons/ft.	
	Base Slab -	13.47 tons	

Appendix C

Stormceptor Patent Information

The Stormceptor System apparatus is protected by Canadian Patent Numbers 2009208, 2137942, 2175277, and 2180305 and U.S. Patent Numbers 4985148, 5498331, 5725760, 5753115, 5849181, 6,068,765 and 6371690. A Stormceptor System apparatus must be purchased from an organization licensed by Stormceptor.

It is also unlawful for other companies to manufacture a storm water treatment apparatus, regardless of its structure, under the trademark Stormceptor. Likewise, any such apparatus as described and claimed in Canadian Patent Numbers 2009208, 2137942, 2175277, and 2180305 and U.S. Patent Numbers 4985148, 5498331, 5725760, 5753115, 5849181, 6,068,765 and 6371690 must be manufactured and sold under the trademark Stormceptor.

If engineers and designers specify equipment “equivalent” to the Stormceptor System apparatus, and that apparatus is truly an “equivalent”, it will infringe the Stormceptor System patent, if not literally then under a tenet well-established in the patent law and known as the “doctrine of equivalents”.

Stormceptor has spent considerable time and money preparing technical design information, laboratory testing, and field studies in order to prove the efficacy of the Stormceptor System apparatus.

In situations where there is a question of whether a competitive product is outside the scope of the doctrine of equivalents and whether it will perform as well as Stormceptor equipment, a prospective purchaser or reviewer is advised to ask for laboratory and field testing data from the supplier of the competitive product, or may call the Rinker Materials Stormceptor office at (800) 909-7763 for an opinion.

As Stormceptor is relying on its rights under the patent laws, it has every intent of litigating under those laws against persons who choose to infringe on its patents.

Call the Stormceptor Information Line (800-909-7763) for more detailed information and test results.

TECHNICAL INFORMATION:

- Stormceptor CD ROM
- Stormceptor Owner's Manual
- Stormceptor Installation Guide
- Stormceptor Brochure

TEST RESULTS:

- STEP Report (Independent Verification)
- University of Coventry Study
- ETV Canada (Federal Verification)
- National Water Research Institute Test
- Westwood, MA Field Monitoring Study
- Edmonton, Canada Field Monitoring Study
- Seattle Field Monitoring
- Como Park, MN Field Monitoring Study
- Florida Atlantic University Submerged Stormceptor Testing
- Oil Removal Field Validation
- Sludge Analyses and Particle Size Analyses

Rinker MATERIALS™

6560 Langfield Rd., Building 3 • Houston, TX 77092
Toll Free: 800-909-7763 • Phone: 832-590-5300 • Fax: 832-590-5399
www.rinkerstormceptor.com
©2006 Rinker Materials Corp.

Rev. 3/2006

Rinker MATERIALS™

THE STORMCEPTOR® SYSTEM

Owner's Manual

Stormceptor® Owner's Manual Contents

1. Stormceptor Overview

2. Stormceptor System Operation

3. Identification of Stormceptor

4. Stormceptor Maintenance Guidelines

   4.1 Recommended Maintenance Procedure

   4.2 Disposal of Trapped Material from Stormceptor

5. Recommended Safety Procedures

6. Stormceptor Monitoring Protocol

   6.1 Pollutants to be Monitored

   6.2 Monitoring Methodology

		Page
List of Tables		
Table 1.	Stormceptor Dimensions	4
Table 2.	Stormceptor Capacities	5
Table 3.	Sediment Depths Indicating Required Maintenance	5
Table 4.	Monitoring Pollutants	9
List of Figures		
Figure 1.	Single Inlet/Outlet "Disc" Insert In-Line Stormceptor	6
Figure 2.	STC 450*i* Inlet Stormceptor	6

Rev. 3/2006

Thank You!

We want to thank you for selecting the Stormceptor System to use in your efforts in protecting the environment. Stormceptor is one of the most effective and maintenance friendly storm water quality treatment devices available. If you have any questions regarding the operation and maintenance of the Stormceptor System, please call your local Rinker Materials representative, or the Stormceptor Information Line at (800) 909-7763.

1. *Stormceptor Overview*

The Stormceptor System is a water quality device used to remove total suspended solids (TSS) and free oil (TPH) from storm water run-off. Stormceptor takes the place of a conventional manhole or inlet structure within a storm drain system. Rinker Materials manufactures the Stormceptor System with precast concrete components and a fiberglass disc insert. A fiberglass Stormceptor can also be provided for special applications.

The Stormceptor System product line consists of four patented designs:

- The In-Line (Conventional) Stormceptor, available in eight model sizes ranging from 900 to 7200 gallon storage capacity.
- An In-Line (Series) Stormceptor is available in three model sizes ranging from 11,000 to 16,000 gallon storage capacity.
- The Submerged Stormceptor, an in-line system designed for oil and sediment removal in partially submerged pipes, available in all models sizes ranging from 450*i* to 16,000 gallon storage capacity.
- The Inlet Stormceptor is a 450 gallon unit designed for small drainage areas.

Stormceptor removes free oil and suspended solids from storm water preventing hazardous spills and non-point source pollution from entering downstream lakes and rivers. Rinker Materials and its affiliates market and manufacture the Stormceptor System in the United States and Australia. Several thousand Stormceptor Systems have been installed in various locations throughout North America, Australia and the Caribbean since 1990.

In the Stormceptor, a fiberglass insert separates the treatment chamber from the by-pass chamber. The different insert designs are illustrated in Figures 1 and 2. These designs are easily distinguishable from the surface once the cover has been removed.

There are four versions of the in-line disc insert: single inlet/outlet, multiple inlet, in-line series insert and submerged designs. In the non-submerged "disc" design you will be able to see the inlet pipe, the drop pipe opening to the lower chamber, the weir, a 6" oil inspection/cleanout pipe, a large 24" riser pipe opening offset on the outlet side of the structure, and the outlet pipe from the unit. The weir will be around the 24" outlet pipe on the multiple inlet disc insert and on large diameter pipe applications.

The STC *(*series) Stormceptors consist of two chambers comprised of similar fiberglass inserts. These units also contain a 6" oil/inspection cleanout pipe and 24" outlet riser pipes.

The submerged disc insert has a higher weir and a second inlet drop pipe. In the inlet design you will be able to see an inlet drop pipe and an outlet riser pipe as well as a central oil inspection/cleanout port.

2. *Stormceptor System Operation*

The Stormceptor consists of a lower treatment chamber, which is always full of water, and a by-pass chamber. Storm water flows into the by-pass chamber via the storm sewer pipe or grated inlet (Inlet Stormceptor). Normal flows are diverted by a weir and drop pipe arrangement into a treatment chamber. Water flows up through the submerged outlet pipe based on the head at the inlet weir and is discharged back into the by-pass chamber downstream of the weir. The treated storm water continues down stream via the storm sewer system.

Oil and other liquids with a specific gravity less than water rise in the treatment chamber and become trapped under the fiberglass insert. Sediment will settle to the bottom of the chamber by gravity. The circular design of the treatment chamber is critical to prevent turbulent eddy currents and to promote settling.

During infrequent high flow conditions, storm water will by-pass the weir and be conveyed to the outlet sewer directly. The by-pass is an integral part of the Stormceptor since other oil/grit separators have been noted to scour during high flow conditions (Schueler and Shepp, 1993).

For further details please refer to *The Stormceptor System Technical Manual*.

The key benefits of Stormceptor include:

- Capable of removing more than 80% of the total sediment load when properly applied as a source control for small drainage areas
- Removes free oil from storm water during normal flow conditions
- Will not scour or resuspend trapped pollutants
- Ideal spill control device for commercial and industrial developments
- Vertical orientation facilitates maintenance and inspections
- Small foot print

3. *Identification of Stormceptor*

All In-Line (including Submerged) Stormceptors are provided with their own frame and cover. The cover has the name STORMCEPTOR clearly embossed on it to allow easy identification of the unit. The name Stormceptor is not embossed on the inlet models due to the variability of inlet grates used/approved across North America. You will be able to identify the Inlet Stormceptor by looking into the grate since the insert will be visible.

Once you have located a unit, there still may be a question as to the size of the unit. Comparing the measured depth from the water level (bottom of insert) to the bottom of the tank with Table 1 should help determine the size of the unit.

Table 1. Stormceptor Dimensions*	
Model	**Pipe Invert to Top of Base Slab**
450*i*	60"
900	55"
1200	71"
1800	105"
2400	94"
3600	134"
4800	128"
6000	150"
7200	134"
11000*s*	128"**
13000*s*	150"**
16000*s*	134"**

** Depths are approximate*
*** Depths per structure*

Starting in 1996, a metal serial number tag has been affixed to the fiberglass insert. If the unit does not have a serial number, or if there is any uncertainty regarding the size of the Stormceptor using depth measurements, please contact the Rinker Materials Stormceptor information line at (800) 909-7763 for assistance.

4. ***Stormceptor Maintenance Guidelines***

The performance of all storm water quality measures that rely on sedimentation decreases as they fill with sediment (See Table 2 for Stormceptor capacities). An estimate of performance loss can be made from the relationship between performance and storage volume. Rinker Materials recommends maintenance be performed when the sediment volume in the unit reaches 15% of the total storage. This recommendation is based on several factors:

- Sediment removal is easier when removed on a regular basis (as sediment builds up it compacts and solidifies making maintenance more difficult).
- Development of a routine maintenance interval helps ensure a regular maintenance schedule is followed. Although the frequency of maintenance will depend on site conditions, it is estimated that annual maintenance will be required for most applications; annual maintenance is a routine occurrence which is easy to plan for and remember.
- A minimal performance degradation due to sediment build-up can occur.

In the event of any hazardous material spill, Rinker Materials recommends maintenance be performed immediately. Maintenance should be performed by a licensed liquid waste hauler. You should also notify the appropriate regulatory agencies as required.

Table 2. Stormceptor Capacities			
Model	**Sediment Capacity ft³ (L)**	**Oil Capacity US gal (L)**	**Total Holding Capacity US gal (L)**
450*i*	45 (1276)	86 (326)	470 (1779)
900	75 (2135)	251 (950)	952 (3604)
1200	113 (3202)	251 (950)	1234 (4671)
1800	193 (5470)	251 (950)	1833 (6939)
2400	155 (4387)	840 (3180)	2462 (9320)
3600	323 (9134)	840 (3180)	3715 (14063)
4800	465 (13158)	909 (3441)	5059 (19150)
6000	609 (17235)	909 (3441)	6136 (23227)
7200	726 (20551)	1059 (4009)	7420 (28088)
11000*s*	942 (26687)	2797 (10588)*	11194 (42374)
13000*s*	1230 (34841)	2797 (10588)*	13348 (50528)
16000*s*	1470 (41632)	3055 (11564)*	15918 (60256)

** Total both structures combined*

4.1 *Recommended Maintenance Procedure*

For the "disc" design, oil is removed through the 6" inspection/cleanout pipe and sediment is removed through the 24" diameter outlet riser pipe. Alternatively, oil could be removed from the 24" opening if water is removed from the treatment chamber, lowering the oil level below the drop pipes.

The depth of sediment can be measured from the surface of the Stormceptor with a dipstick tube equipped with a ball valve (Sludge Judge®). It is recommended that maintenance be performed once the sediment depth exceeds the guideline values provided in Table 3 for the reasons noted in Section 4.0 Stormceptor Maintenance Guidelines.

Table 3. Sediment Depths Indicating Required Maintenance	
Model	**Sediment Depth***
450*i*	8" (200 mm)
900	8" (200 mm)
1200	10" (250 mm)
1800	15" (375 mm)
2400	12" (300 mm)
3600	17" (425 mm)
4800	15" (375 mm)
6000	18" (450 mm)
7200	15" (375 mm)
11000*s*	17" (425 mm)**
13000*s*	20" (500 mm)**
16000*s*	17" (425 mm)**

** Depths are approximate*

*** In each structure*

No entry into the unit is required for routine maintenance of the Inlet Stormceptor or the smaller disc insert models of the In-Line Stormceptor. Entry to the level of the disc insert may be required for servicing the larger disc insert models. Any potential obstructions at the inlet can be observed from the surface. The fiberglass insert has been designed as a platform for authorized maintenance personnel in the event that an obstruction needs to be removed.

Typically, maintenance is performed by the Vacuum Service Industry, a well established sector of the service industry that cleans underground tanks, sewers, and catch-basins. Costs to clean a Stormceptor will vary based on the size of the unit and transportation distances. If you need assistance for cleaning a Stormceptor unit, contact your local Rinker Materials representative, or the Stormceptor Information Line at (800) 909-7763.

Figures 1 and 2 will help illustrate the access point for routine maintenance of Stormceptor.

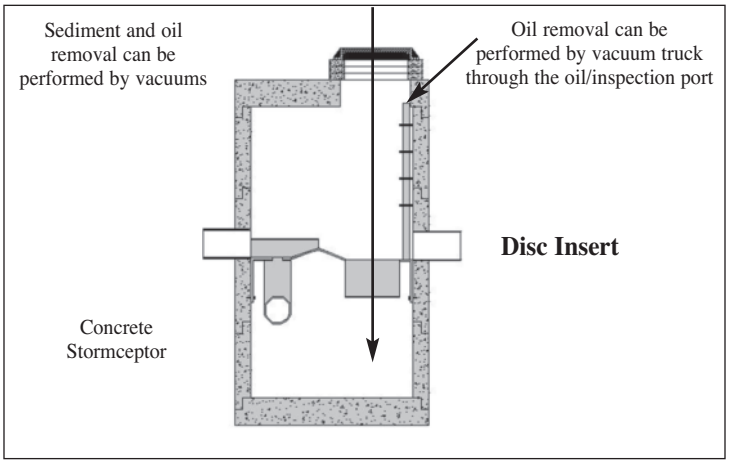

Figure 1 Single Inlet/Outlet "Disc" Insert
In-Line Stormceptor

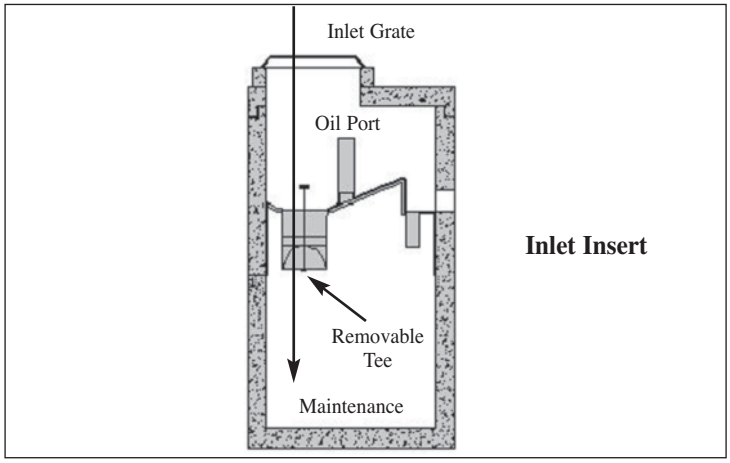

Figure 2 STC 450*i*
Inlet Stormceptor

4.2 *Disposal of Trapped Material from Stormceptor*

The requirements for the disposal of material from Stormceptor are similar to that of any other Best Management Practices (BMP). Local guidelines should be consulted prior to disposal of the separator contents.

In most areas the sediment, once dewatered, can be disposed of in a sanitary landfill. It is not anticipated that the sediment would be classified as hazardous waste. In some areas, mixing the water with the sediment will create a slurry that can be discharged into a trunk sanitary sewer. In all disposal options, approval from the disposal facility operator/agency is required. Petroleum waste products collected in Stormceptor (oil/chemical/fuel spills) should be removed by a licensed waste management company.

What if I see an oil rainbow or sheen at the Stormceptor outlet?

With a steady influx of water with high concentrations of oil, a sheen may be noticeable at the Stormceptor outlet. This may occur because a rainbow or sheen can be seen at very small oil concentrations (< 10 ppm). Stormceptor will remove over 95% of all free oil and the appearance of a sheen at the outlet with high influent oil concentrations does not mean that the unit is not working to this level of removal. In addition, if the influent oil is emulsified, the Stormceptor will not be able to remove it. The Stormceptor is designed for free oil removal and not emulsified or dissolved oil conditions.

5.0 *Recommended Safety Procedures*

Rinker Materials strongly recommends that any person who enters a Stormceptor System follow all applicable OSHA regulations for entry in permit required confined spaces, as outlined in 29 CFR 1910.146. A permit required confined space consists of a space that:

- Is large enough and so configured that an employee can bodily enter and perform assigned work.
- Has limited or restricted means for entry and exit.
- Is not designed for continuous employee occupancy.
- Contains or has one of the following:
  - a potential to contain a hazardous atmosphere.
  - a material that has the potential for engulfing an entrant.
  - any other recognized serious safety hazard.

Storm water and wastewater systems fall under OSHA guidelines for a permit required confined space. Failure to follow OSHA guidelines for entry and work in a permit required confined space can result in serious injury or death. Please exercise extreme caution and follow appropriate safety procedures when entering any confined space.

Two square pick holes in the cover vent the Stormceptor, allow for removal of the cover, and provide sampling ports for air quality monitoring before the cover is removed. If you must enter the Stormceptor, please note that if the disc insert inside is wet, it can be slippery.

Recognizing that every work site is different, the responsibility for safety falls on the contractor. The contractor must ensure that all employees and subcontractors follow established safety procedures and OSHA regulations for working in and around permit required confined spaces as well as for any other safety hazard that may be present on that particular site.

6.0 *Stormceptor Monitoring Protocol*

If monitoring of your Stormceptor System is required, we recommend you follow the procedures outlined below by the Rinker Materials Stormceptor office. If you have any questions regarding monitoring please contact the Rinker Materials Stormceptor Product Manager at (800) 909-7763.

6.1 *Pollutants to be Monitored*

Table 4 indicates the pollutants to be monitored during the storm events and the minimum acceptable detection limit for each pollutant to be analyzed. Approved federal or state laboratory analysis methodologies are to be used for the analysis.

The optional metals indicated in Table 4 refer to the Resource Conservation Recovery Act and may be covered by a generic metals scan. Bacteria monitoring will not be required unless explicitly requested elsewhere.

Two sediment samples are to be extracted from the monitored Stormceptor at the end of the study and analyzed for the particle size distribution and water content. A minimum of 8 U.S. sieve sizes should be used to determine the particle size distribution. Sieves that are used must include, but are not limited to 35, 60, 100, 140, 200, 270 and 400. Three clay particle sizes must be analyzed to denote particle sizes between 5 and 25 μm. The particle size distributions should be plotted on a standard grain size distribution graph.

Table 4. Monitoring Pollutants	
Pollutant	**Minimum Detection Limit (MDL)**
Total Suspended Solids (TSS)	5 mg/l
Total Phosphorus (P)	0.02 mg/l
Total Kjeldahl Nitrogen (TKN)	0.1 mg/l
Copper (Cu)	0.001 mg/l
Cadmium (Cd)	0.005 mg/l
Lead (Pb)	0.05 mg/l
Zinc (Zn)	0.01 mg/l
Chromium (Cr)	0.01 mg/l
Total Petroleum Hydrocarbons (TPH)	1 mg/l
Conductivity	0.1 μmho/cm
Fecal Coliform*	1/100 ml
Additional Metals (optional)	
Arsenic (As)	0.005 mg/l
Barium (Ba)	0.01 mg/l
Mercury (Hg)	0.0005 mg/l
Selenium (Se)	0.005 mg/l
Silver (Ag)	0.01 mg/l

* Only if explicitly requested in Terms of Reference

6.2 *Monitoring Methodology*

The following monitoring protocol should be followed to ensure reasonable monitoring results and interpretation:

- Monitoring protocols should conform to **EPA 40 CFR Part 136.**
- The **EPA guideline of 72 hours dry period** prior to a monitoring event should be used. This will ensure that there is sufficient pollutant build-up available for wash-off during the monitored event.
- Flow proportional monitoring must be conducted for the parameters indicated in Table 1. Samples should be analyzed separately for the first flush versus the remainder of the storm event. Monitoring need not extend longer than an 8-hour period after the start of the storm event (composite).
- **Sediment sampling** (measuring the sediment depth in the unit at the beginning and end of the monitoring period) must be conducted. The water content of the sediment layer must be analyzed to determine the dry volume of suspended solids. Sediment depth sampling will indicate the rate of pollution accumulation in the unit, provide confirmation that the unit is not scouring and confirm the flow proportional monitoring results. A mass balance using the sediment sampling should be calculated to validate the flow proportional sampling.

- **Grab sampling** (just taking samples at the inlet and outlet) is an unacceptable methodology for testing the performance of the Stormceptor during wet weather conditions unless it is flow weighted (flow weighted composite sample from numerous grab samples) over the entire storm.
- The oil containment area underneath the insert should be inspected via the vent pipe for dry weather spills capture once a month during the monitoring period since the flow rate of a dry weather spill may not trigger the automated samplers.
- A tipping bucket rain gauge should be installed on-site to record the distribution of storm intensities and rainfall volume during the monitored events.
- Results that are within the laboratory error (both inlet and outlet) or are representative of relatively clean water should be discarded. Typical concentrations of pollutants in storm water are:

TSS	100 mg/L
Total P	0.33 mg/L
TKN	1.50 mg/L
Total Cu	34 μg/L
Total Pb	144 μg/L
Total Zn	160 μg/L

A threshold first flush/composite TSS value of 50 mg/L at the inlet to the Stormceptor should be used as the lower limit of an acceptable storm for reporting event efficiency. Monitoring results where the influent TSS concentration is less than 50 mg/L should only be used in mass load removal calculations over the entire monitoring period with other storms where the influent concentration is greater than 50 mg/L. The results should not be analyzed if the influent TSS concentrations during all monitored storms are less than 50 mg/L. Storms where the influent TSS concentration is less than 10 mg/L should be discarded from all analyses.

- A threshold storm event volume equal to 1.5 times the storage volume of the Stormceptor being monitored should be used as the lower limit of an acceptable storm for monitoring.
- Sampling at the outlet of the Stormceptor should be conducted within the 24" outlet riser pipe to accurately define event performance.
- The personnel monitoring the Stormceptor should record incidental information in a log file. Information such as weather, site conditions, inspection and maintenance information, monitoring equipment failure, etc. provide valuable information that can explain anomalous results.
- Laboratory results of monitored samples should be analyzed within 10 days of being submitted to the lab.
- Weekly inspections of the sampling tubes, flow meter, rain gauge, and quality samplers should be conducted to ensure proper operation of the monitoring equipment. Debris and sediment that collects around the sampling intakes should be cleaned after each event.
- During the installation of automated quality samplers, care should be exercised to ensure that representative samples will be extracted (placement of intakes, ensuring that tubing is not constricted or crimped).
- Sampling should be conducted for a minimum of 6 storms. Ideally 15 storms should be sampled if the budget allows.

Call the Stormceptor Information Line (800-909-7763) for more detailed information and test results.

TECHNICAL INFORMATION:

- Stormceptor CD ROM
- Stormceptor Technical Manual
- Stormceptor Installation Guide
- Stormceptor Brochure

TEST RESULTS:

- STEP Report (Independent Verification)
- University of Coventry Study
- ETV Canada (Federal Verification)
- National Water Research Institute Test
- Westwood, MA Field Monitoring Study
- Edmonton, Canada Field Monitoring Study
- Seattle Field Monitoring
- Como Park, MN Field Monitoring Study
- Florida Atlantic University Submerged Stormceptor Testing
- Oil Removal Field Validation
- Sludge Analyses and Particle Size Analyses

Rinker MATERIALS™

6560 Langfield Rd., Bldg. 3
Houston, TX 77092
Phone: 832-590-5300
Fax: 832-590-5399
Toll Free: 800-909-7763
www.rinkerstormceptor.com

©2006 Rinker Materials Corp.

Rev. 3/2006