FINAL DAP

STATE	PROJECT	SHEET NUMBER
DOT	PFH 163(19)	A.1

U. S. DEPARTMENT OF TRANSPORTATION
FEDERAL HIGHWAY ADMINISTRATION

PLANS FOR PROPOSED PROJECT

OR PFH 163(19)

HISTORIC COLUMBIA RIVER HIGHWAY STATE TRAIL

LINDSEY CREEK TO STARVATION CREEK TRAILHEAD
HOOD RIVER COUNTY
OREGON
LENGTH 1.26 MILES

Project Location

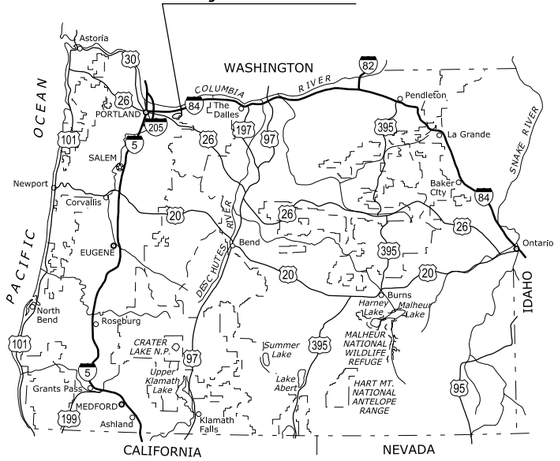

OREGON KEY MAP

TYPE OF CONSTRUCTION:

Grading, base, paving, structures and drainage

SPECIFICATION:

Standard Specifications for Construction of Roads and Bridges on Federal Highway Projects, FP-03 US Customary Units

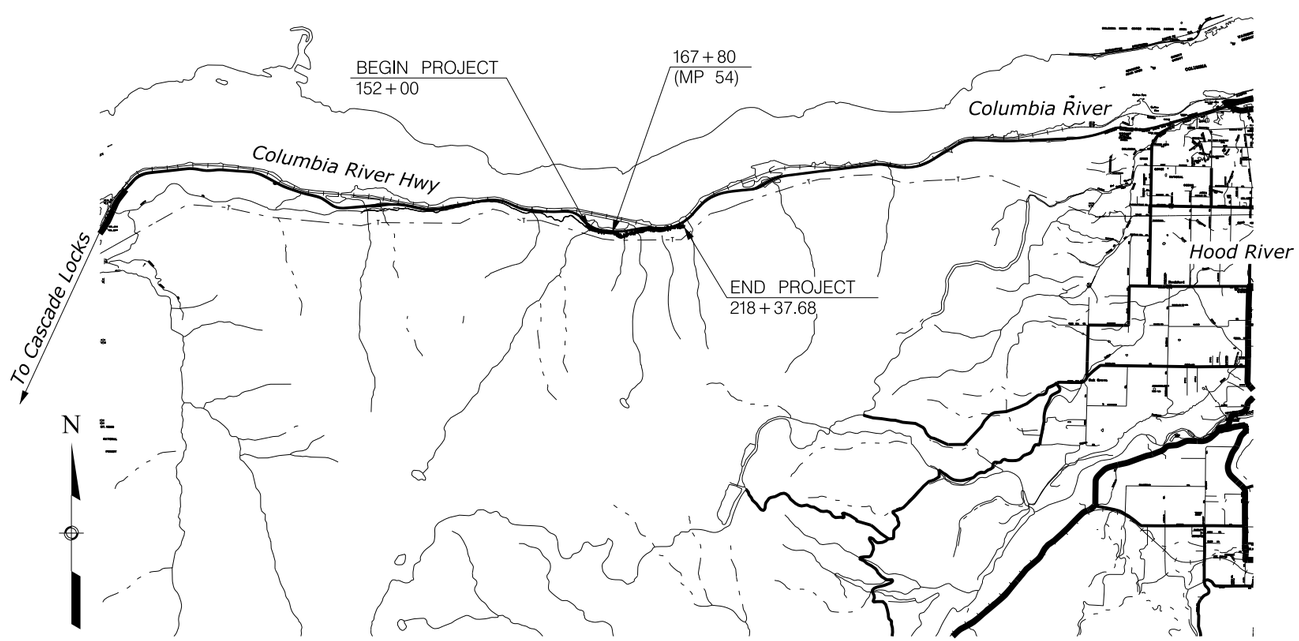

Scale in miles
10 5 0 10 20 30

FEDERAL LANDS HIGHWAY
COMMITMENT TO EXCELLENCE

PLANS PREPARED BY

CH2MHILL

INDEX TO SHEETS

A. GENERAL INFORMATION
A.1 TITLE SHEET
A.2 PLAN SYMBOLS AND ABBREVIATIONS

B. SUMMARY OF QUANTITIES
B.1-B.2 SUMMARY OF QUANTITIES

C. TYPICAL SECTION(S)
C.1-C.6 TYPICAL SECTIONS

D. PLAN-PROFILE
D.1 CURVE DATA TABLE
D.2-D.7 PLAN AND PROFILES
D.8 ACCESS ROAD AND APPROACH DETAILS
D.9 TURNOUT DETAILS
D.10-11 RAIL DETAILS
D.12 ROCKERY DETAIL

E. EROSION CONTROL
E.1 TABULATION OF EROSION CONTROL QUANTITIES
E.2-E.7 EROSION CONTROL PLAN AND PROFILES
E.8 EROSION CONTROL NOTES
E.9-12 EROSION CONTROL DETAILS

F. DRAINAGE
F.1 TABULATION OF DRAINAGE QUANTITIES
F.2-F.7 DRAINAGE PLAN AND PROFILES

G. TEMPORARY TRAFFIC CONTROL
G.1 TABULATION OF TRAFFIC CONTROL QUANTITIES
G.2-G.6 TEMPORARY TRAFFIC CONTROL PLANS

H. PERMANENT TRAFFIC CONTROL
H.1-H.3 PERMANENT TRAFFIC CONTROL PLANS

I. STRUCTURES
I.1-I.2 WARREN CREEK BRIDGE PLANS

J. WALLS
J.1-J.7 WALL PLAN AND PROFILES
J.8-J.10 WALL DETAILS

REGISTERED PROFESSIONAL ENGINEER
85529PE
OREGON
July 12, 2011
AARON KAY DALEO
PRELIMINARY
NOT FOR CONSTRUCTION
EXPIRES: 12/31/2015

APPROVED:

DATE

Director, Project Delivery,
Western Federal Lands Highway Division

06/2014 Checked by: J. Bland 06/2014 Designed by: S. Daleo 24-Jun-2014 03:11 PM ...\or-0001aa.dgn [Int_ft2D]

Δ	total central angle
Δc	curve central angle
Ø	diameter
θs	spiral central angle
abut.	abutment
ADT	average daily traffic
AH	ahead
appr.	approach
BK	back
BM	bench mark
BP	balance point
br.	bridge
brg.	bearing
cc or c. to c.	center to center
℄	centerline
clr.	clear
CMP	corrugated metal pipe
col.	column
conc.	concrete
conn.	connection
constr. jt.	construction joint
cont.	continuous
CS	point of curve to spiral
ctrs.	centers
CUFT	cubic foot (feet)
culv.	culvert
CUYD	cubic yard(s)
D	diameter
DHV	design hourly volume
dia.	diameter
diag.	diagonal
diaph.	diaphragm
dist.	distance
drwg(s).	drawing(s)
E	east
e	superelevation rate
El. 94.16 ft	elevation with number
elev.	elevation
emb.	embankment
EP	edge of pavement
EQ or eq.	equation
ER	edge of road
EW	edge of water
exc.	excavation
exp. jt.	expansion joint
fin.	finish
flg.	flange
ft2	square foot
ft3	cubic foot (feet)
ftg.	footing
ga.	gage (gauge)
galv.	galvanized
hdwl.	headwall
hex.	hexagon
HW	high water
ID	inside diameter
jt.	joint
L	length of curve
lam.	lamination
lat.	latitude
LNFT	linear foot (feet)
long.	longitudinal
LPSM	lump sum
Ls	length of spiral
lt. or LT	left
LW	low water
M.L.	main line
M.P.	mile post
matl.	material
max.	maximum
MGAL	thousand gallon
min.	minimum
mon.	monument
N	north
NC	normal crown
o. c.	on center
o. to o.	out to out
OD	outside diameter
OG	original ground
PC	point of curve
PCC	point of compound curve
PCS	point of curve to spiral
PI	point of intersection
pl.	plate
POC	point on curve
POS	point on spiral
POT	point on tangent
PS	point of tangent to spiral
PSC	point of spiral to curve
PST	point of spiral to tangent
PT	point of tangent
pvmt.	pavement
R	radius
R.	range
R/W	right-of-way
rdwy.	roadway
reinf.	reinforcement
reqd.	required
rt. or RT	right
rte.	route
S	south
SADT	seasonal average daily traffic
SC	point of spiral to curve
sec.	section
shldr.	shoulder
SLRY	slurry unit
spa.	spacing, spaces or spaced
SQFT	square foot
SQYD	square yard
SRS	point of spiral to reverse spiral
SS	point of spiral to spiral (no curve)
ST	point of spiral to tangent
STA, Sta.	station
std.	standard
stgr.	stringer
stiff.	stiffener
struc.	structural
STS	point of spiral to tangent spiral
sym.	symmetrical
T	tangent distance
T.	township
TBM	temporary bench mark
thd.	thread
TS	point of tangent to spiral
Ts	tangent distance (spiraled curve)
typ.	typical
V	design speed
vph	vehicles per hour
VPI	vertical point of intersection
W	west
yd2	square yard
yd3	cubic yard(s)

NOTE:

1. Other symbols used in the plans will be shown in a legend on the appropriate plan sheet.

National Boundary
State Boundary
County Boundary
City Boundary
Township or Range Line
Section Line
Section Corner (Found, Projected)
¼ Section Line
¼ Section Corner (Found, Projected)
1/16 Section Line
1/16 Section Corner (Found, Projected)
Property Line w/Found Property Corner
Parcel Number
National Park Boundary
National Forest Boundary
National Wildlife Refuge Boundary
BLM Lands Boundary
Indian Reservation Boundary
Existing Roadway (Road, Paved, Gravel)
Railroad
Trail
Wattle
Silt Fence
Intermittent Drainage or Small Creek
Large Creek or River
Lake, Pond or Reservoir; Marshland
Spring or Seep
Treeline; Individual Trees
Material Source; Bore Hole; Test Pit
Spot Elevation; Coordinate Grid Tick
Above Ground Tank; Underground Tank
Boulder; Well; Satellite Dish; Grave
Cooking Grate; Garbage Can; Picnic Table
Flagpole; Fire Hydrant
Gas & Water Meter; Gas & Water Valve
Control Point (Terrestrial and GPS); Jump Hub

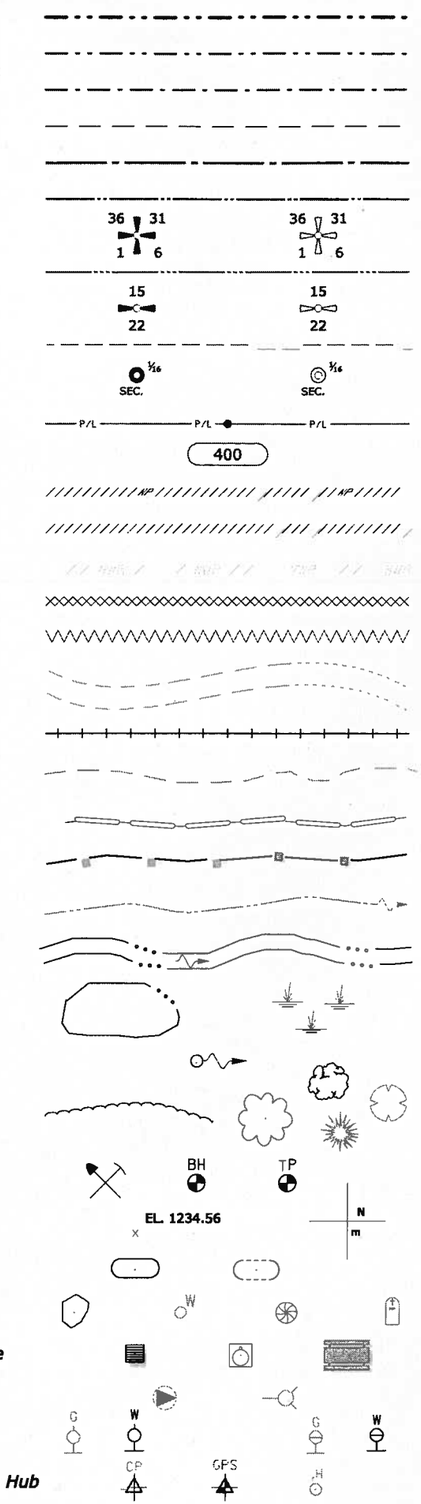

STATE	PROJECT	SHEET NUMBER
OR	PFH 163(19)	A.2

FINAL DAP

North Arrow

	EXISTING	PROPOSED
Slope Stake Limits: Top of Cut		
Toe of Fill		
Transition		
Fence		
Gate with Fence		
Cattleguard		
Guardrail		
Concrete Barrier		
Retaining Wall		wall face
Signs (single, double post; portable)		
Delineators		
Pipe Culvert (arrow shows flow)		
Pipe Culvert with End Section		
Pipe Culvert with Headwall		
Pipe Culvert with Drop Inlet	D	DI
Box Culvert		
Underdrain	UD	UD
Overhead/Above Ground Utilities	P	P
Underground Utilities	W	W

FM = force main, FO = fiber optic, G = gas, IRR = irrigation, O = oil, P = power, SA = sanitary sewer, SD = storm drain, SS = storm sewer, STEAM = steam, T = telephone, TV = CATV, W = water

Poles (Power, Telephone, Joint Use, Light, Support w/Anchor)

Miscellaneous Utility Features

EM = electric meter, T = telephone pedestal, TV = CATV pedestal, UP = transformer or junction box, WF = water fountain

Building

Right-of-Way Line with Monument — R/W

Permanent Easement — P/E

Construction Easement — - no symbol - — C/E

Riprap

NO SCALE

U.S. DEPARTMENT OF TRANSPORTATION
FEDERAL HIGHWAY ADMINISTRATION
WESTERN FEDERAL LANDS HIGHWAY DIVISION

U.S. CUSTOMARY DETAIL

PLAN SYMBOLS AND ABBREVIATIONS

DETAIL APPROVED FOR USE 11/2001
REVISED: 9/2005 1/2007 10/2009

DETAIL W101-1

16 October 2009 1:08 PM
H:\StanDraw\w10101.dgn [USC]

STATE	PROJECT	SHEET NUMBER
OR	PFH 163(19)	B.1

FINAL DAP

SUMMARY OF QUANTITIES - Schedule A

Pay Item Number	Pay Item Description	Unit	Sheet and Description										Estimated Quantities	Remarks and/or Determination of Estimated Quantity
			C	D	E	F	G	H	I	J				
			Typical Section	Plan, Trail	Temp. Erosion Control	Drainage	Temporary Traffic Control	Perm. Traffic Control	Bridge	Walls			Bid Schedule	
	MOBILIZATION	LPSM											ALL	
	CONSTRUCTION SURVEY AND STAKING	LPSM											ALL	
	CONTRACTOR QUALITY CONTROL AND ASSURANCE	LPSM											ALL	
	CONTRACTOR TESTING	LPSM											ALL	
	CONSTRUCTION SCHEDULE	LPSM											ALL	
	SOIL EROSION CONTROL	LPSM			ALL								ALL	
	SOIL EROSION CONTROL, SILT FENCE	LF			1850								1850	
	SOIL EROSION CONTROL, HIGH VISIBILITY FENCE	LF			500								500	
	SOIL EROSION CONTROL,STRAW WATTLE	LF			250								250	
	SOIL EROSION CONTROL, INLET PROTECTION	LF			4								4	
	SOIL EROSION CONTROL, MULCH	ACRE			0.81								0.81	
	SOIL EROSION CONTROL, ENERGY DISSIPATOR	EACH			3								3	
	CLEARING AND GRUBBING	ACRE		5.6									5.6	
	REMOVAL OF STRUCTURES AND OBSTRUCTIONS	LPSM											ALL	
	32" CONCRETE PRECAST BARRIER	LF		2170									2170	
	42" WHITE WOOD RAIL	LF		752									752	
	48" WHITE WOOD RAIL	LF		245									245	
	28" STEEL HANDRAIL	LF		120									120	
	V-FENCE	LF		1440									1440	
	BORROW	CY		9237									9237	
	TEMPORARY SIGNS	SF					252						252	
	TEMPORARY CONCRETE BARRIER	LF					3725						3725	
	TEMPORARY PLASTIC DRUMS	EACH					74						74	
	TEMPORARY BARRICADES, TYPE III	EACH					4						4	
	TEMPORARY IMPACT ATTENUATOR	EACH					2						2	
	18 INCH CULVERT PIPE	LF				111							111	
	18 INCH STORM SEWER PIPE	LF				1561							1561	
	CONCRETE STORM SEWER MANHOLES	LF				1							1	
	CONCRETE INLETS, TYPE G-2	LF				4							4	
	AGGREGATE BASE	TON		2503									2503	
	LEVEL 2, 1/2 INCH DENSE MHMAC MIXTURE	TON		1692									1692	

Designed by: J. Bland 06/2014
Checked by: S. Daleo 06/2014
6/24/2014
...\or-0001ba.dgn [Int_ft2D]

SUMMARY OF QUANTITIES - Schedule A

	PG 64-22 ASPHALT IN MHMAC	TON		102									102	
	PERMANENT SIGNS IN PLACE	SF						71					71	
	RETAINING WALL, ROCKERY	SF					2440			2440			4880	
	RETAINING WALL, MSE	SF					1945			1945			3890	
	RETAINING WALL, MSE W/ FASCIA	SF					2200			2200			4400	
	RETAINING WALL, MSE W/ VEGETATED REINF. SLOPE	SF					2400			2400			4800	
	MOMENT SLAB	LF					37			37			74	
	MOMENT SLAB WITH CONCRETE PARAPET	LF					75			75			150	
	WARREN CREEK BRIDGE	LPSM							ALL				ALL	

FINAL DAP

STATE	PROJECT	SHEET NUMBER
OR	PFH 163(19)	C.1

FINAL DAP

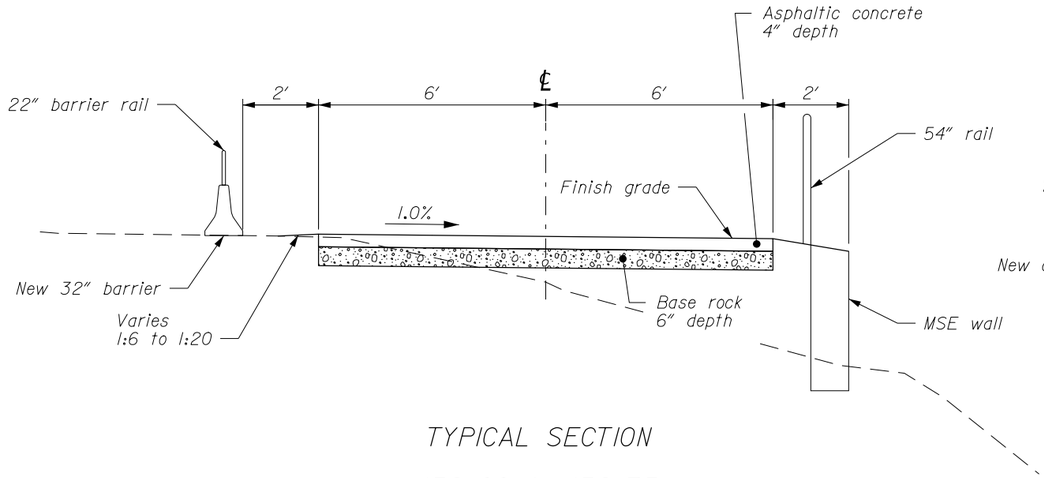

TYPICAL SECTION

152+00 to 152+75

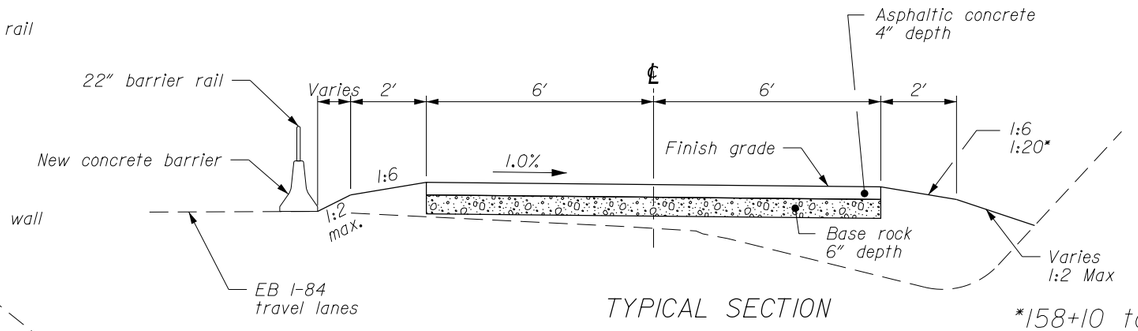

TYPICAL SECTION

152+75 to 169+80

*158+10 to 159+30
165+70 to 167+00
169+10 to 169+40

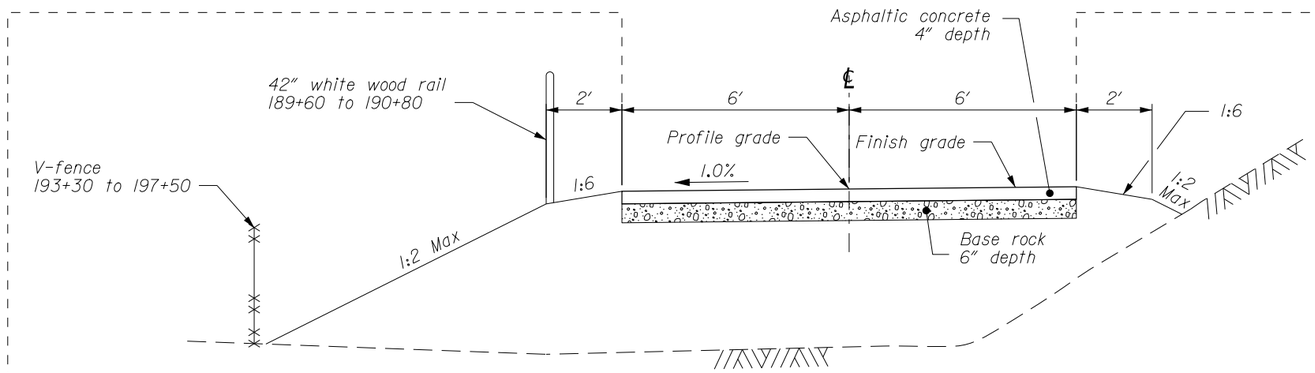

TYPICAL SECTION

169+80 to 172+35
173+10 to 177+40
178+20 to 183+75
184+75 to 185+30
189+65 to 190+80
193+30 to 197+50

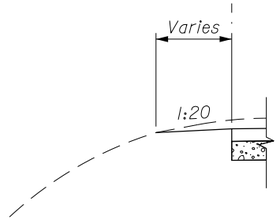

TYPICAL SECTION

171+80 to 172+35
173+10 to 173+80
185+15 to 185+30

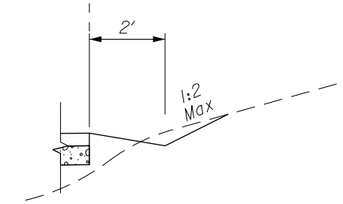

TYPICAL SECTION

171+10 to 172+15
173+20 to 174+45
183+50 to 183+75
184+80 to 185+30
196+00 to 196+35
197+20 to 197+45

NO SCALE

TYPICAL SECTION DETAILS

...\or-0001ca.dgn [Int_ft2D]	6/24/2014	Designed by: S. Daleo	06/2014
		Checked by: J. Bland	06/2014

STATE	PROJECT	SHEET NUMBER
OR	PFH 163(19)	C.2

FINAL DAP

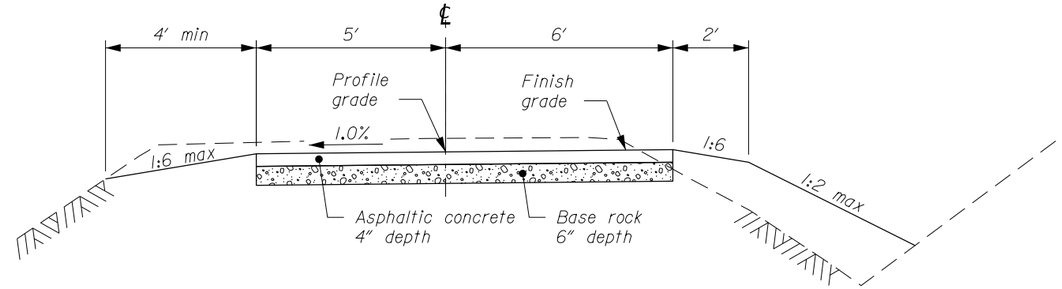

TYPICAL SECTION

172+35 to 173+10

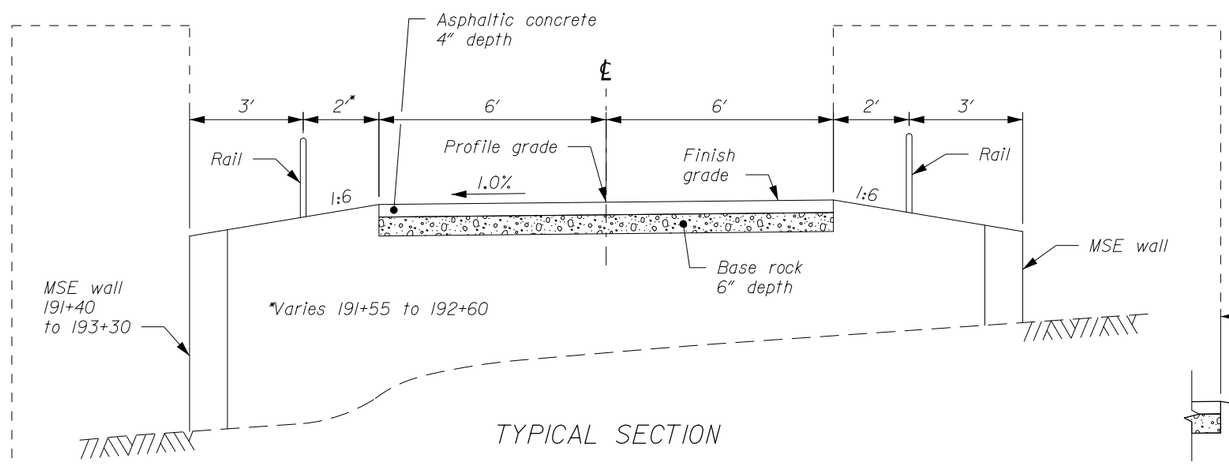

TYPICAL SECTION

177+40 to 177+68 (Bridge wing walls)

178+10 to 178+20 (Bridge wing walls)

190+80 to 193+30

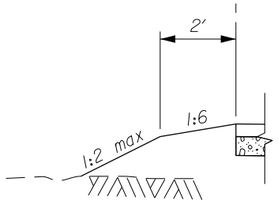

190+80 to 191+40

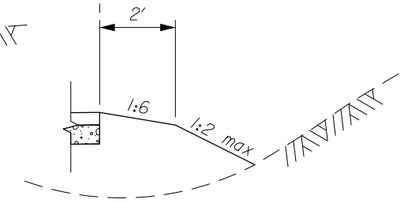

TYPICAL SECTION

190+45 to 191+75

193+20 to 193+30

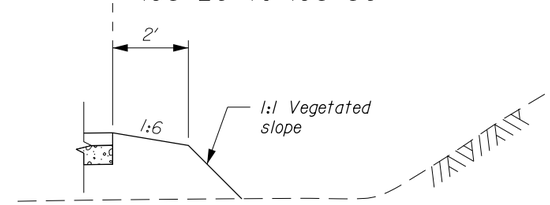

TYPICAL SECTION

191+40 to 193+20

NO SCALE

TYPICAL SECTION DETAILS

Designed by:	Checked by:	
S. Daleo	J. Bland	
06/2014	06/2014	06/2014

6/24/2014

...\or-0001cb.dgn [int_ft2D]

STATE	PROJECT	SHEET NUMBER
OR	PFH 163(19)	C.3

FINAL DAP

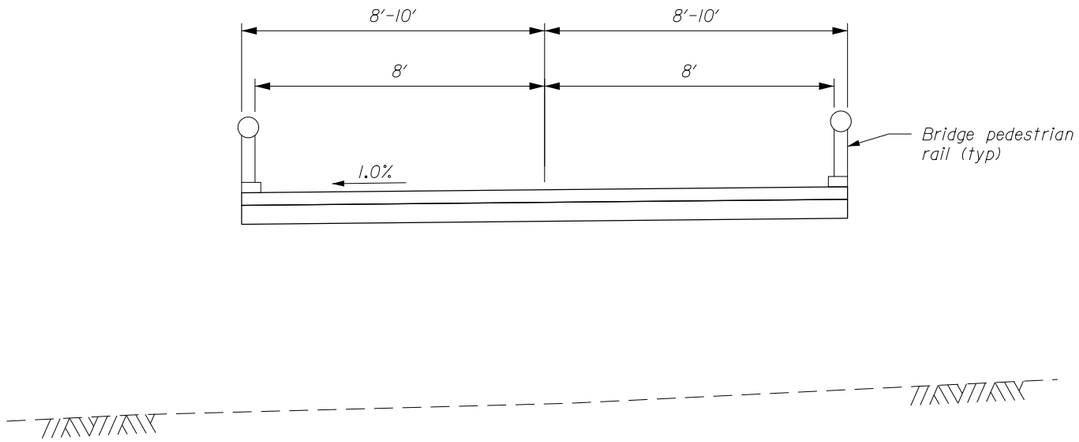

TYPICAL SECTION

177+68 to 178+10 (Bridge)

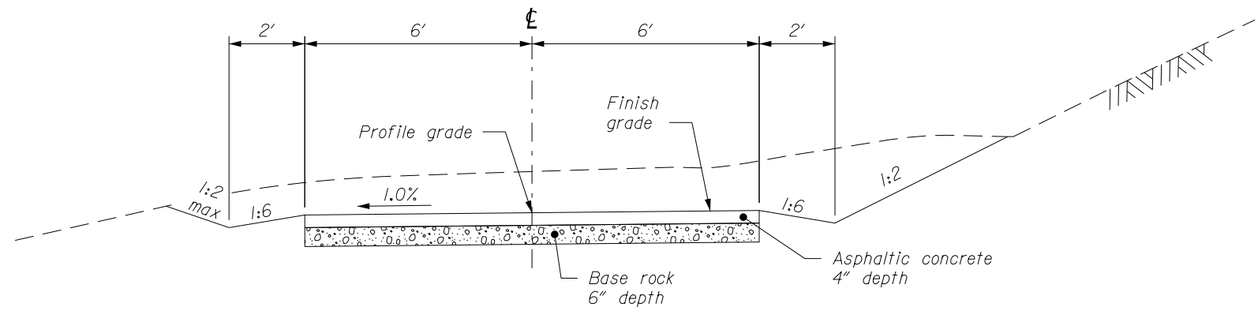

TYPICAL SECTION

183+75 to 184+75
185+30 to 186+50
187+10 to 188+75

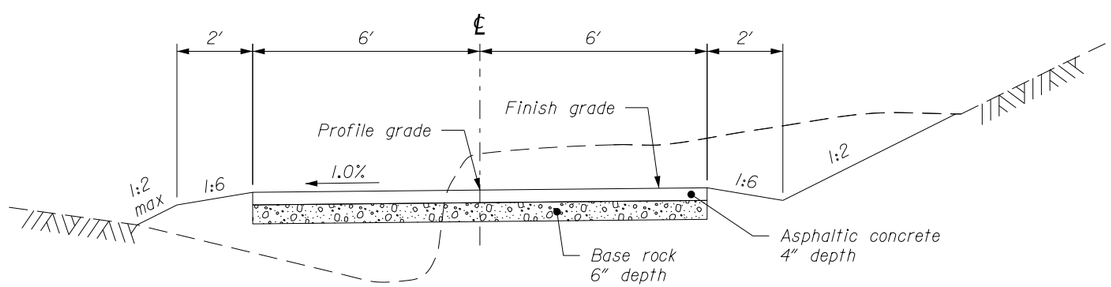

TYPICAL SECTION

186+50 to 187+10
188+75 to 189+65

NO SCALE

TYPICAL SECTION DETAILS

Designed by:	Checked by:	
S. Daleo	J. Bland	
6/24/2014	06/2014	06/2014

..\or-0001cc.dgn [Int_ft2D]

STATE	PROJECT	SHEET NUMBER
OR	PFH 163(19)	C.4

FINAL DAP

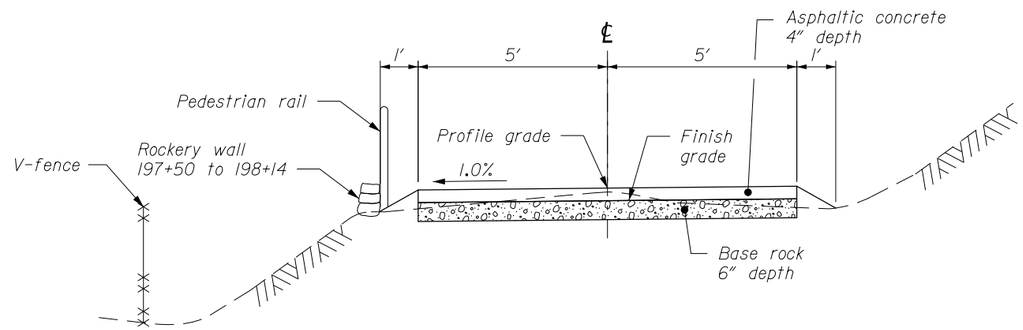

TYPICAL SECTION
197+50 to 198+70

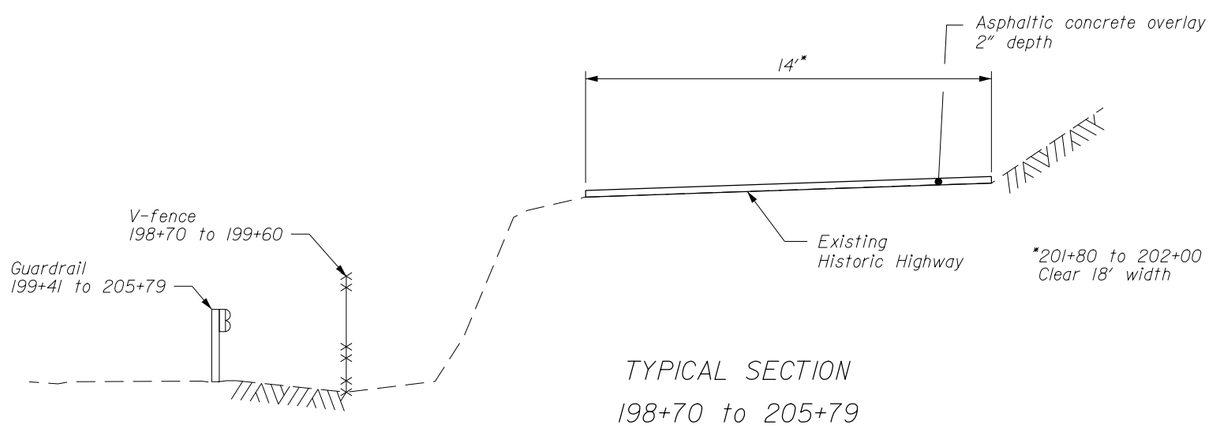

TYPICAL SECTION
198+70 to 205+79

NO SCALE

TYPICAL SECTION DETAILS

Designed by:	Checked by:	
S. Daleo	J. Bland	
06/2014	06/2014	06/2014

24-Jun-2014 03:58 PM

...\or-0001cd.dgn [Int_ft2D]

STATE	PROJECT	SHEET NUMBER
OR	PFH 163(19)	C.5

FINAL DAP

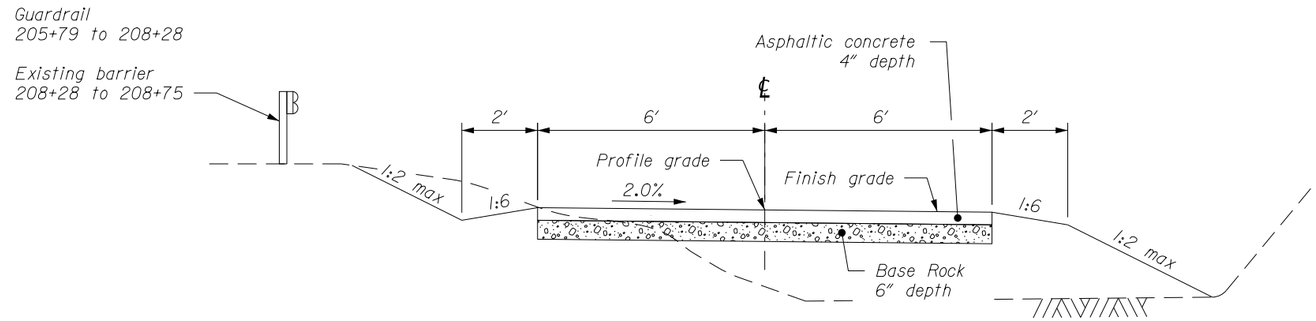

TYPICAL SECTION

205+79 to 208+50

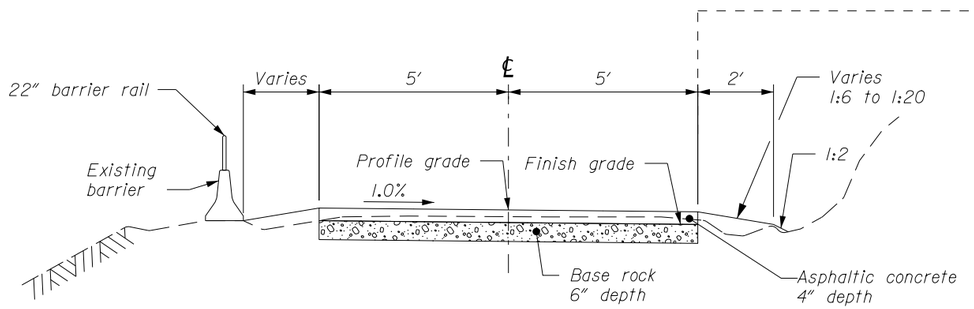

TYPICAL SECTION

208+50 to 216+50

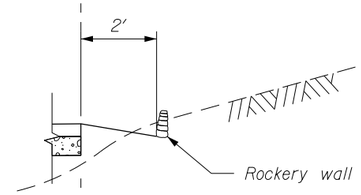

TYPICAL SECTION

212+60 to 215+30

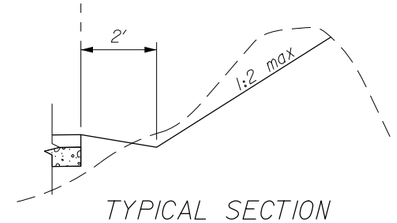

TYPICAL SECTION

215+30 to 216+50

NO SCALE

TYPICAL SECTION DETAILS

Designed by:	Checked by:	J. Bland	06/2014
S. Daleo	06/2014		
6/24/2014			

...\or-0001ce.dgn [Int_ft2D]

STATE	PROJECT	SHEET NUMBER
OR	PFH 163(19)	C.6

FINAL DAP

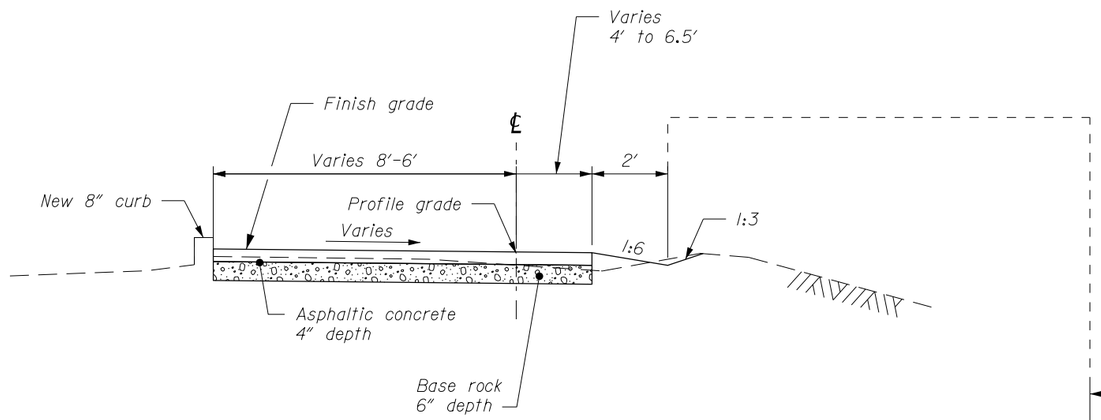

TYPICAL SECTION

216+50 to 218+38

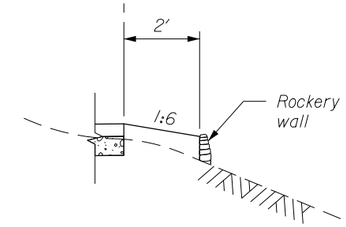

TYPICAL SECTION

217+15 to 217+35

218+05 to 218+30

NO SCALE

TYPICAL SECTION DETAILS

...\or-0001cf.dgn [Int_ft2D] | Designed by: 6/24/2014 | Checked by: 06/2014 | S. Daleo | 06/2014 | J. Bland

STATE	PROJECT	SHEET NUMBER
OR	PFH 163(19)	D.1

FINAL DAP

CURVE DATA TABLE

Curve #	Δ	T	L	R
1	11°07'43"	29.23'	58'	300'
2	8°57'42"	195.91'	391'	2500'
3	17°11'57"	21.17'	42'	140'
4	25°30'55"	31.70'	62'	140'
5	6°13'15"	76.08'	152'	1400'
6	19°16'24"	33.96'	67'	200'
7	34°48'19"	73.66'	143'	235'
8	16°59'05"	35.09'	70'	235'
9	5°18'47"	278.09'	278'	3000'
10	50°30'01"	75.46'	141'	160'
11	7°44'01"	12.84'	26'	190'
12	23°26'19"	24.89'	49'	120'
13	19°44'38"	38.28'	76'	220'
14	23°23'41"	54.87'	108'	265'
15	35°32'08"	96.13'	186'	300'
16	17°04'09"	45.02'	89'	300'
17	22°56'18"	62.90'	124'	310'
18	41°14'44"	65.86'	126'	175'
19	64°10'20"	72.23'	130'	116'
20	31°14'20"	59.83'	117'	214'
21	55°55'40"	95.56'	176'	180'
22	73°00'42"	92.52'	159'	125'
23	11°12'16"	49.04'	98'	500'
24	1°24'44"	12.32'	25'	1000'
25	6°51'02"	65.84'	132'	1100'
26	6°53'41"	24.10'	48'	400'
27	5°07'59"	22.41'	45'	500'
28	13°06'53"	91.96'	183'	800'
29	10°17'10"	63.00'	126'	700'
30	8°04'47"	71.33'	142'	1010'
31	6°15'19"	43.71'	87'	800'
32	5°17'25"	34.64'	69'	750'
33	19°31'18"	103.22'	204'	600'
34	5°59'54"	52.39'	105'	1000'
35	72°34'54"	66.29'	71'	56'
36	14°59'47"	6.58'	13'	50'
37	22°15'13"	5.90'	12'	30'
38	32°23'20"	8.71'	17'	30'
39	58°21'31"	25.13'	46'	45'
40	52°57'27"	14.94'	28'	30'
41	58°21'31"	25.13'	46'	45'

CURVE DATA TABLE

Designed by: S. Daleo 06/2014
Checked by: J. Bland 06/2014
6/24/2014
...\or-0001fl.dgn [Int_ft2D]

STATE	PROJECT	SHEET NUMBER
OR	PFH 163(19)	D.2

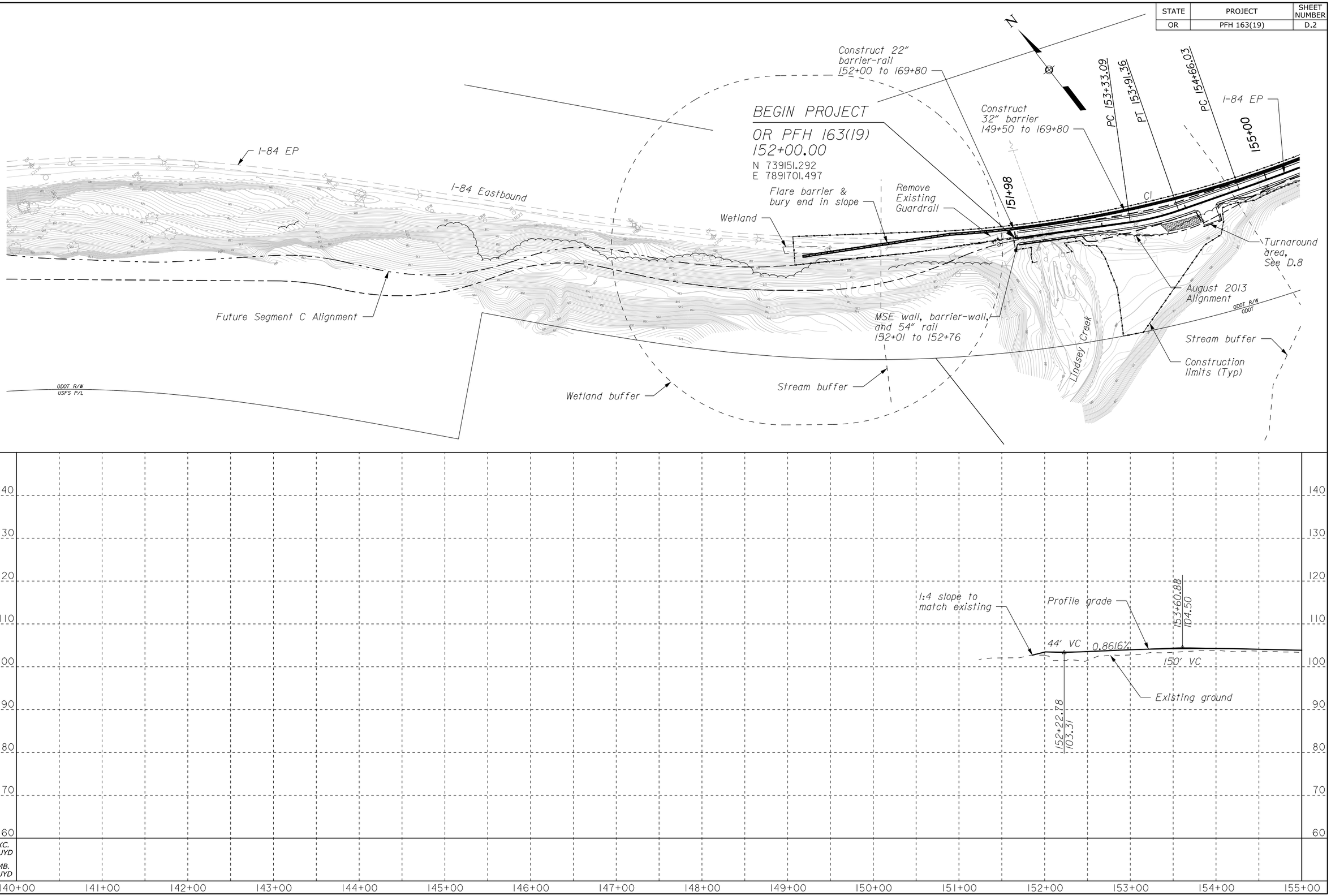

06/2014 J. Bland Checked by: 06/2014 S. Daleo Designed by: 6/24/2014 ...\or-0001fm.dgn [Int_ft2D]

STATE	PROJECT	SHEET NUMBER
OR	PFH 163(19)	D.3

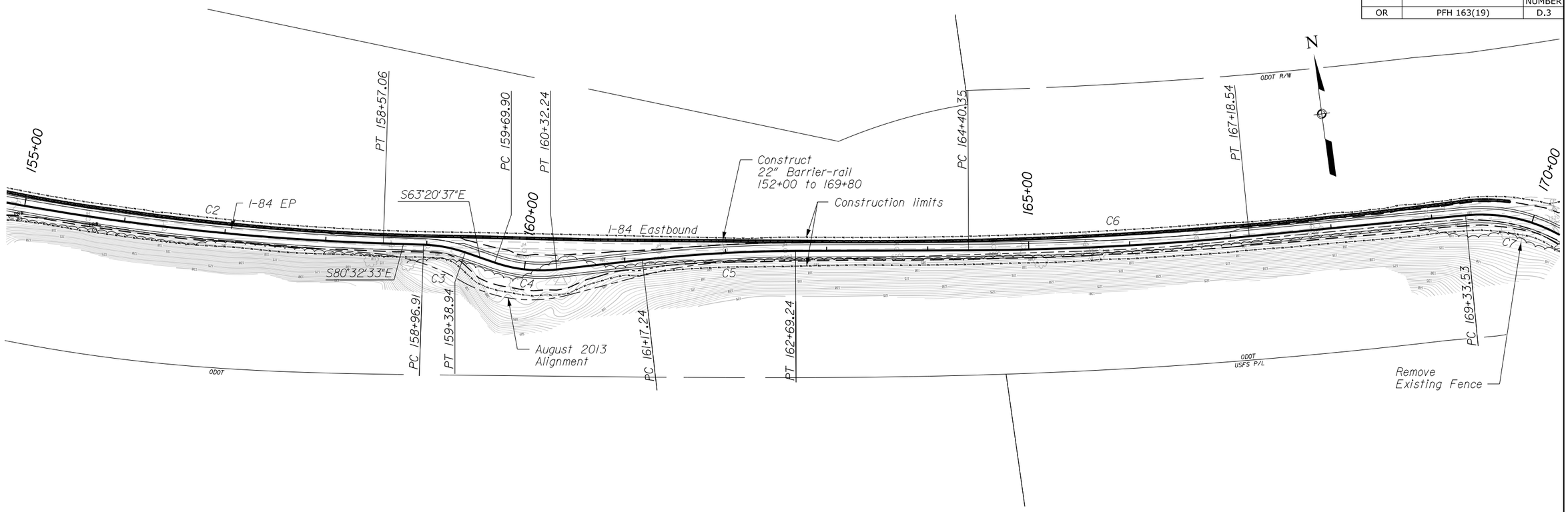

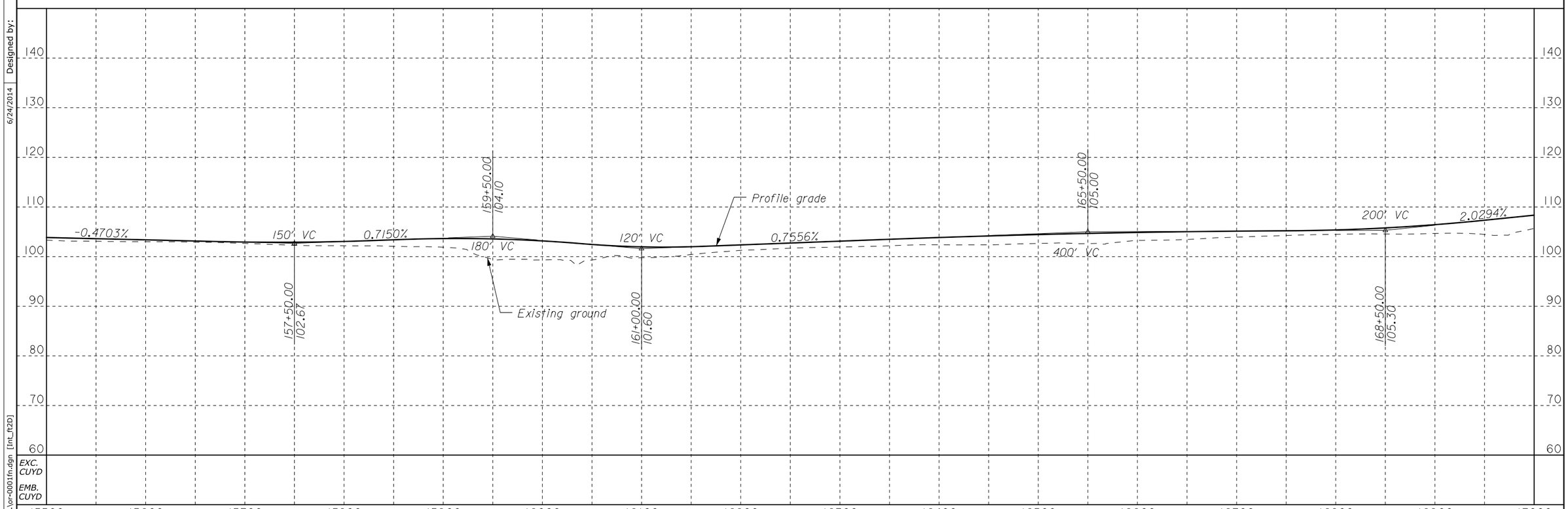

Designed by: 6/24/2014
Checked by: 06/2014
J. Bland
S. Daleo 06/2014
...\or-0001fn.dgn [Int_ft2D]

STATE	PROJECT	SHEET NUMBER
OR	PFH 163(19)	D.4

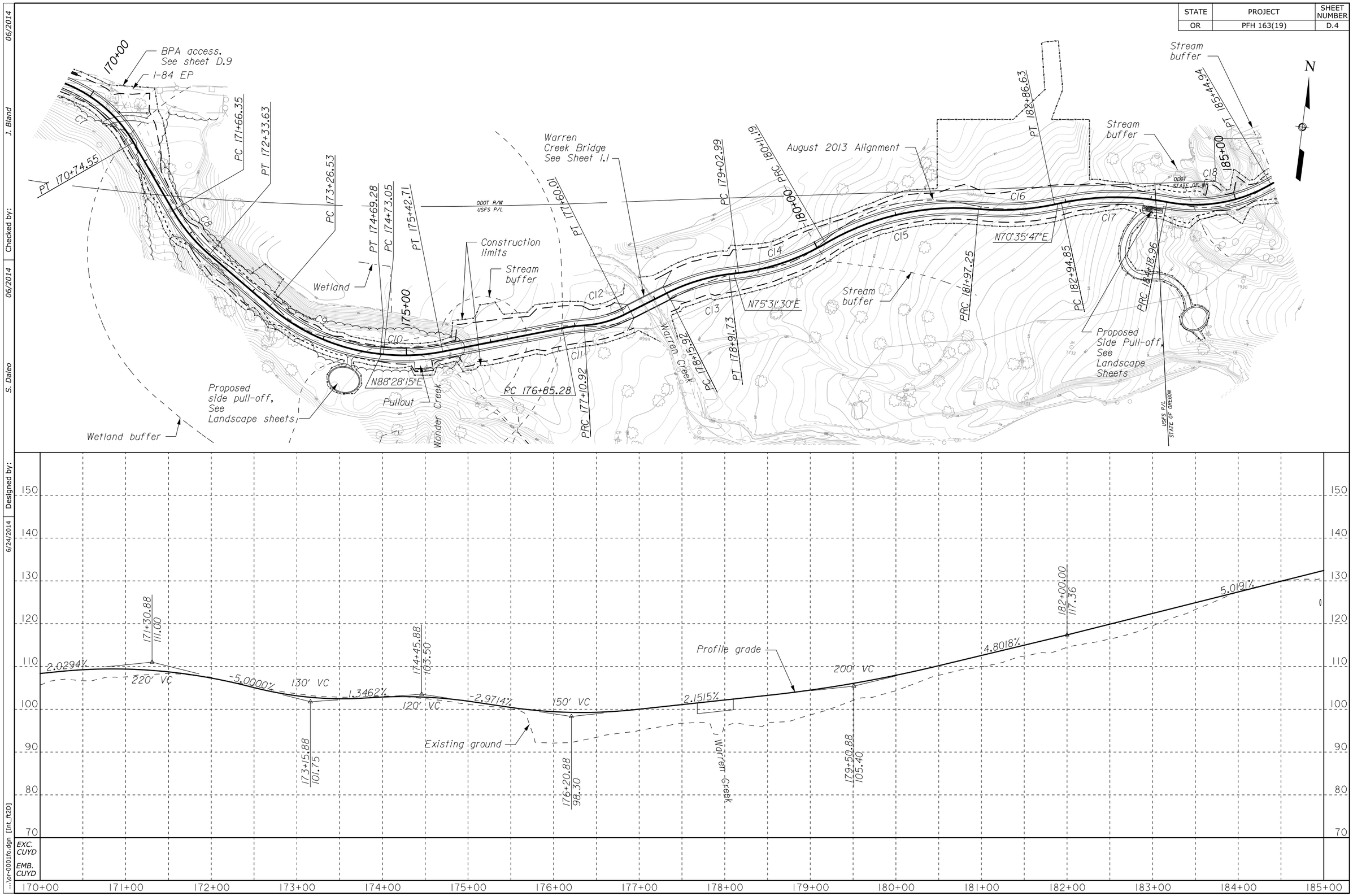

Designed by: 6/24/2014 | Checked by: 06/2014 | S. Daleo | J. Bland | 06/2014

...\or-0001fa.dgn [Int_ft2D]

STATE	PROJECT	SHEET NUMBER
OR	PFH 163(19)	D.5

FINAL DAP

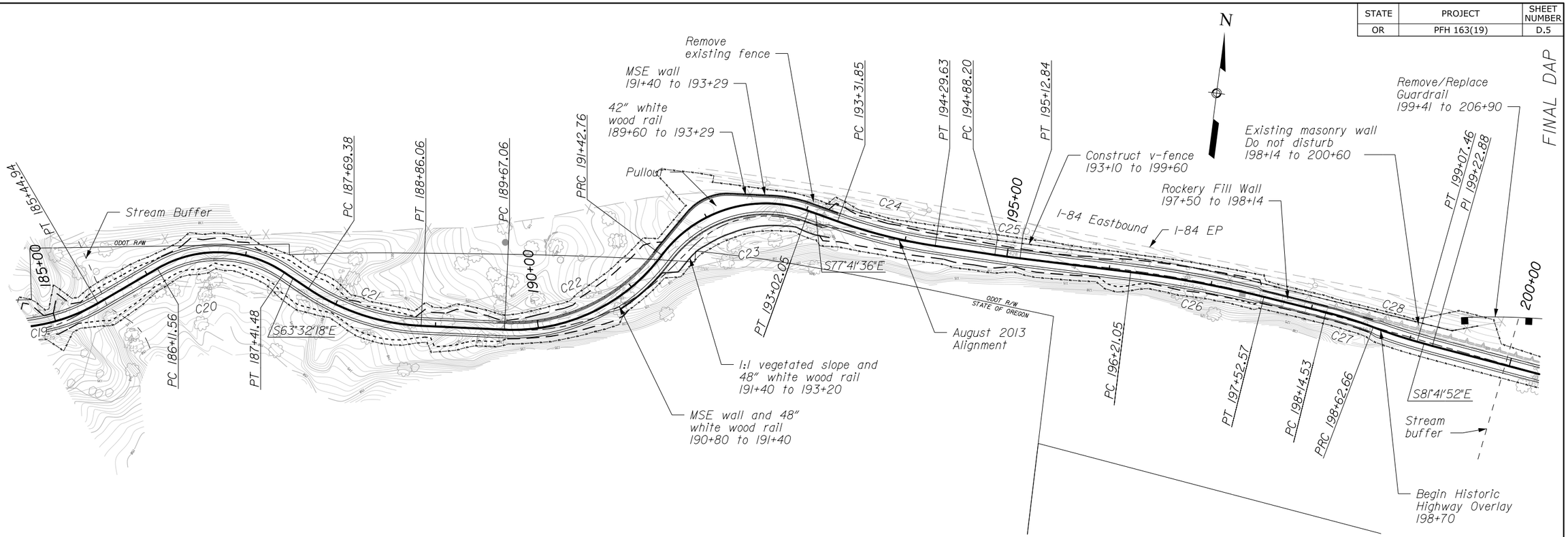

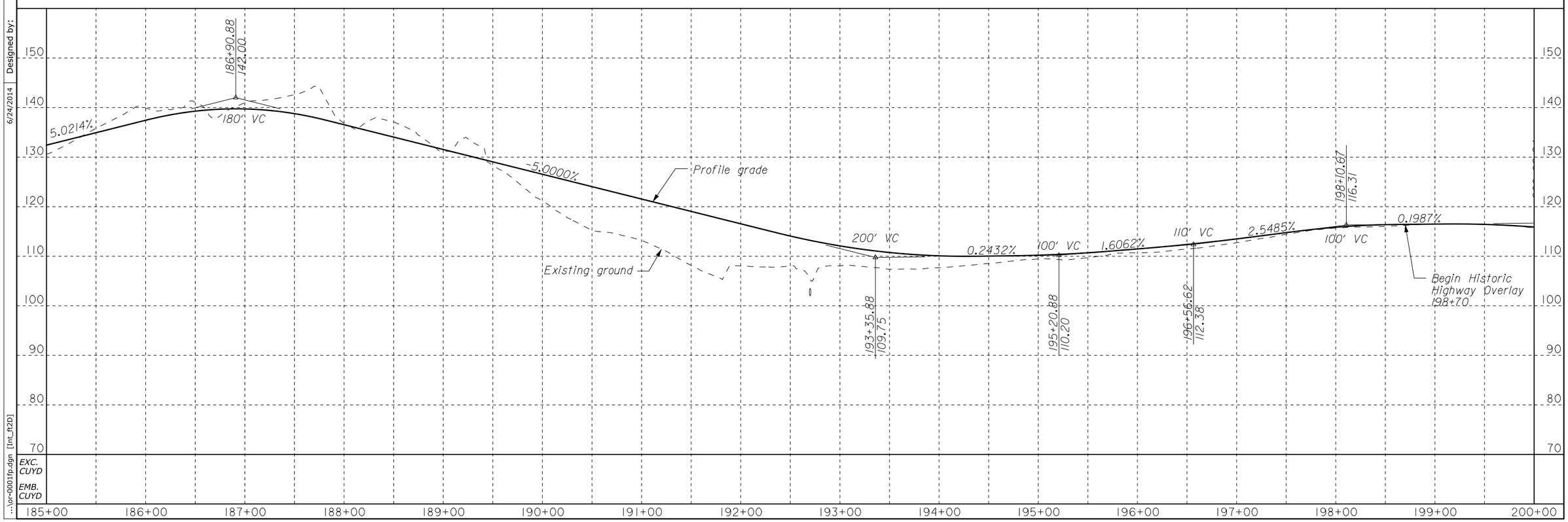

Designed by: S. Daleo 06/2014 | Checked by: J. Bland 06/2014

...\or-0001fp.dgn [int_ft20] 6/24/2014

STATE	PROJECT	SHEET NUMBER
OR	PFH 163(19)	D.6

FINAL DAP

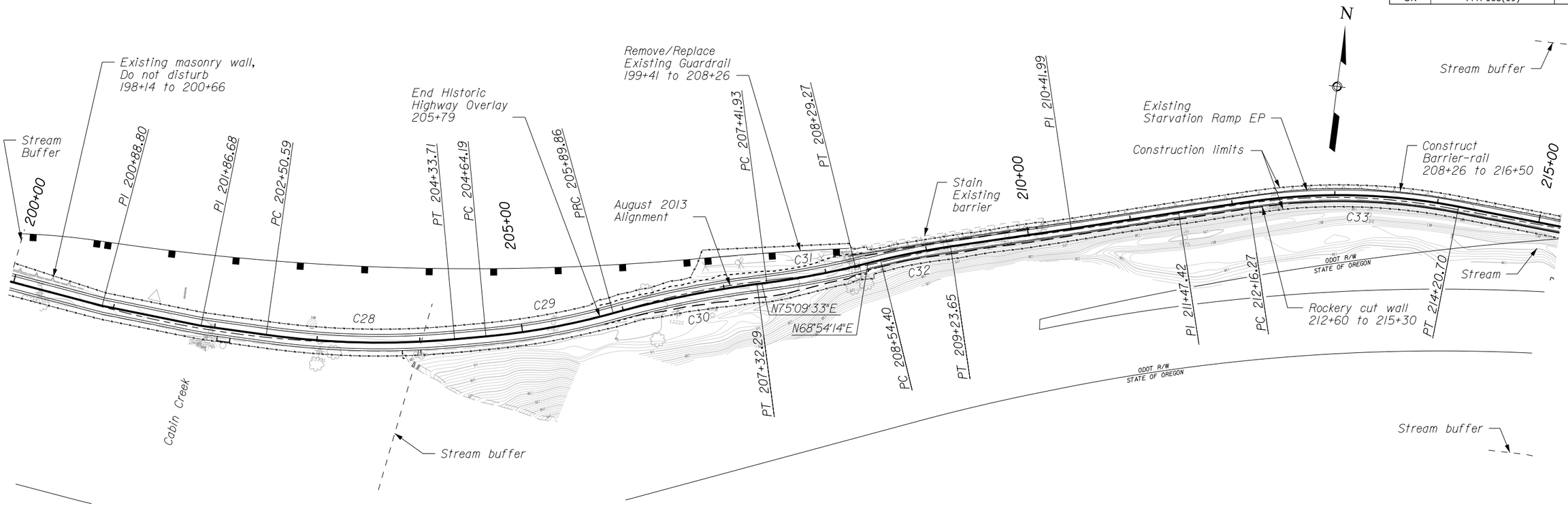

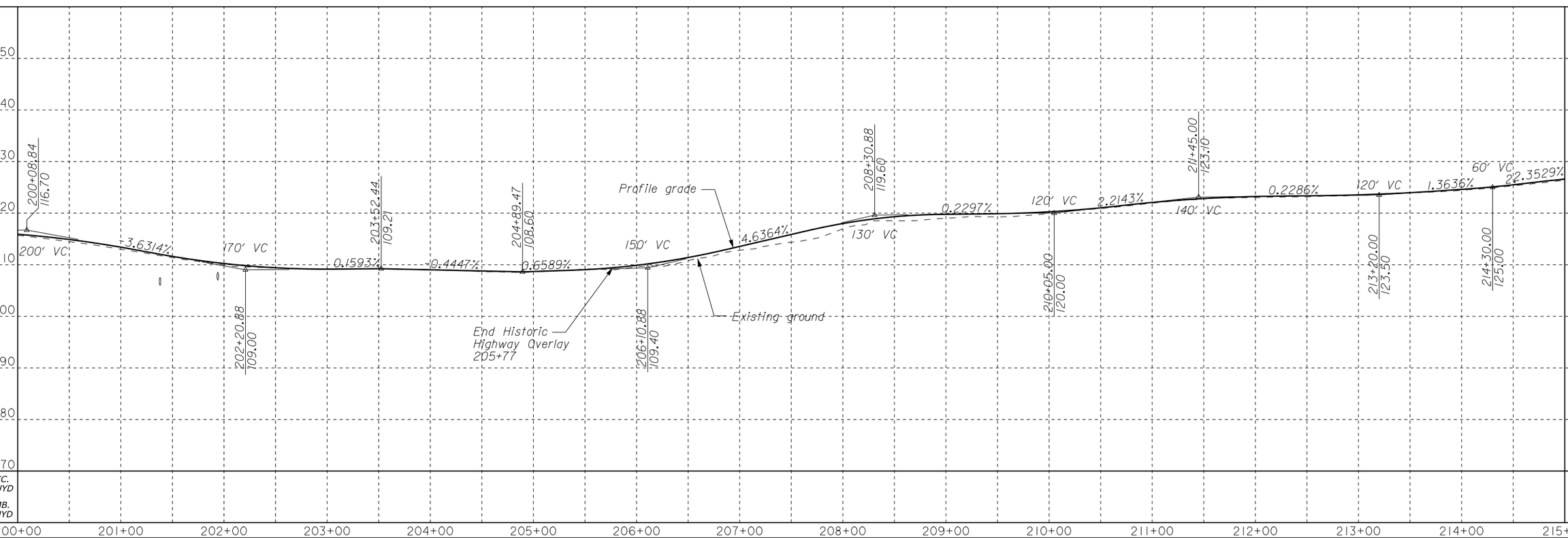

06/2014 | J. Bland | Checked by: 06/2014 | S. Daleo | Designed by: 6/24/2014 | ...\or-0001fq.dgn [Int_ft2D]

STATE	PROJECT	SHEET NUMBER
OR	PFH 163(19)	D.7

FINAL DAP

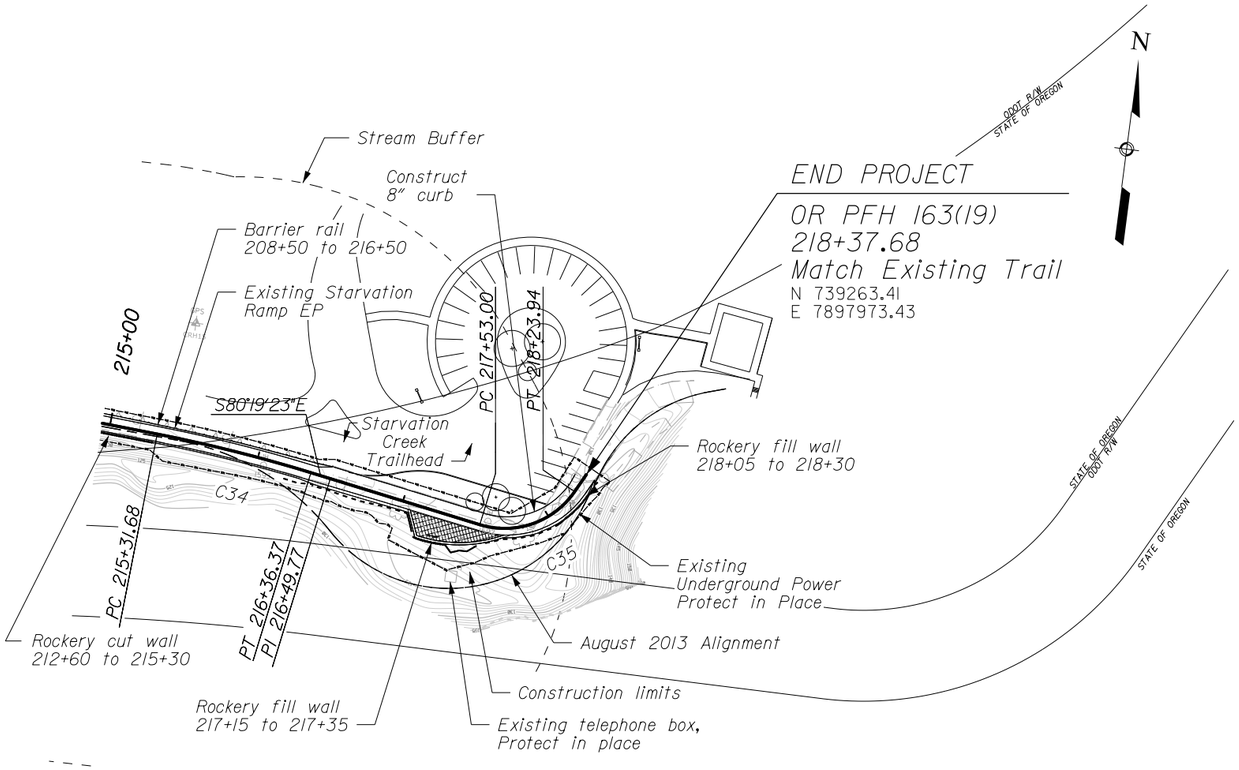

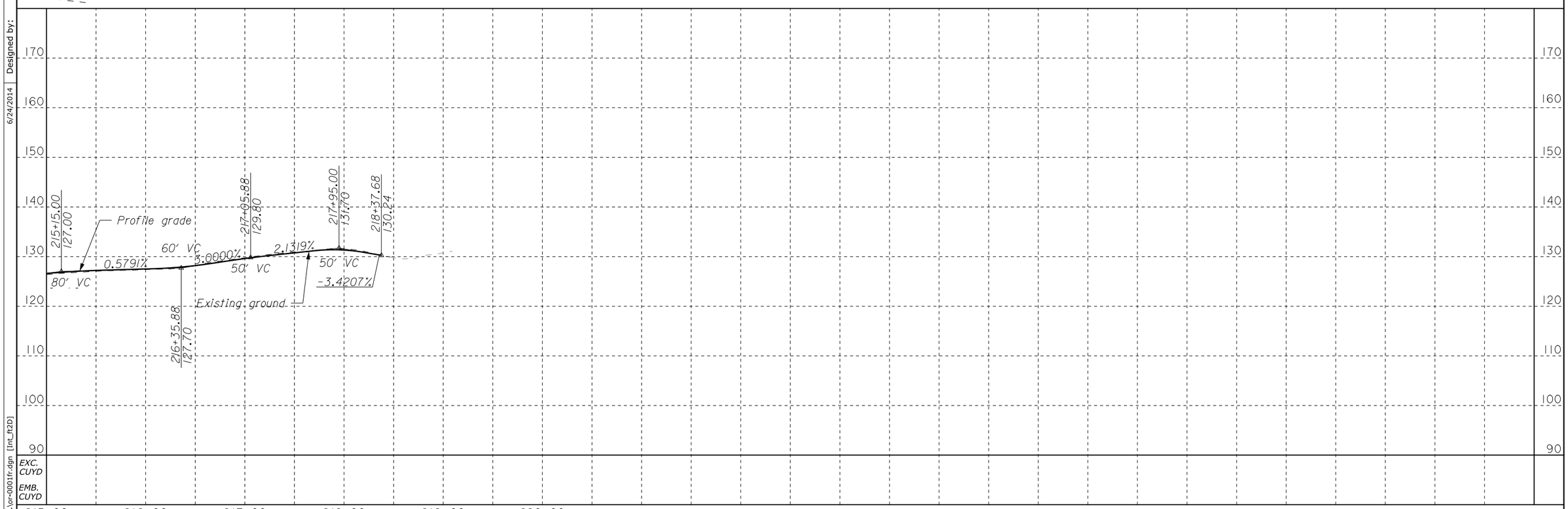

...\or-0001fr.dgn [int_ft2D] | Designed by: 6/24/2014 | Checked by: 06/2014 | S. Daleo | J. Bland | 06/2014

STATE	PROJECT	SHEET NUMBER
OR	PFH 163(19)	D.8

FINAL DAP

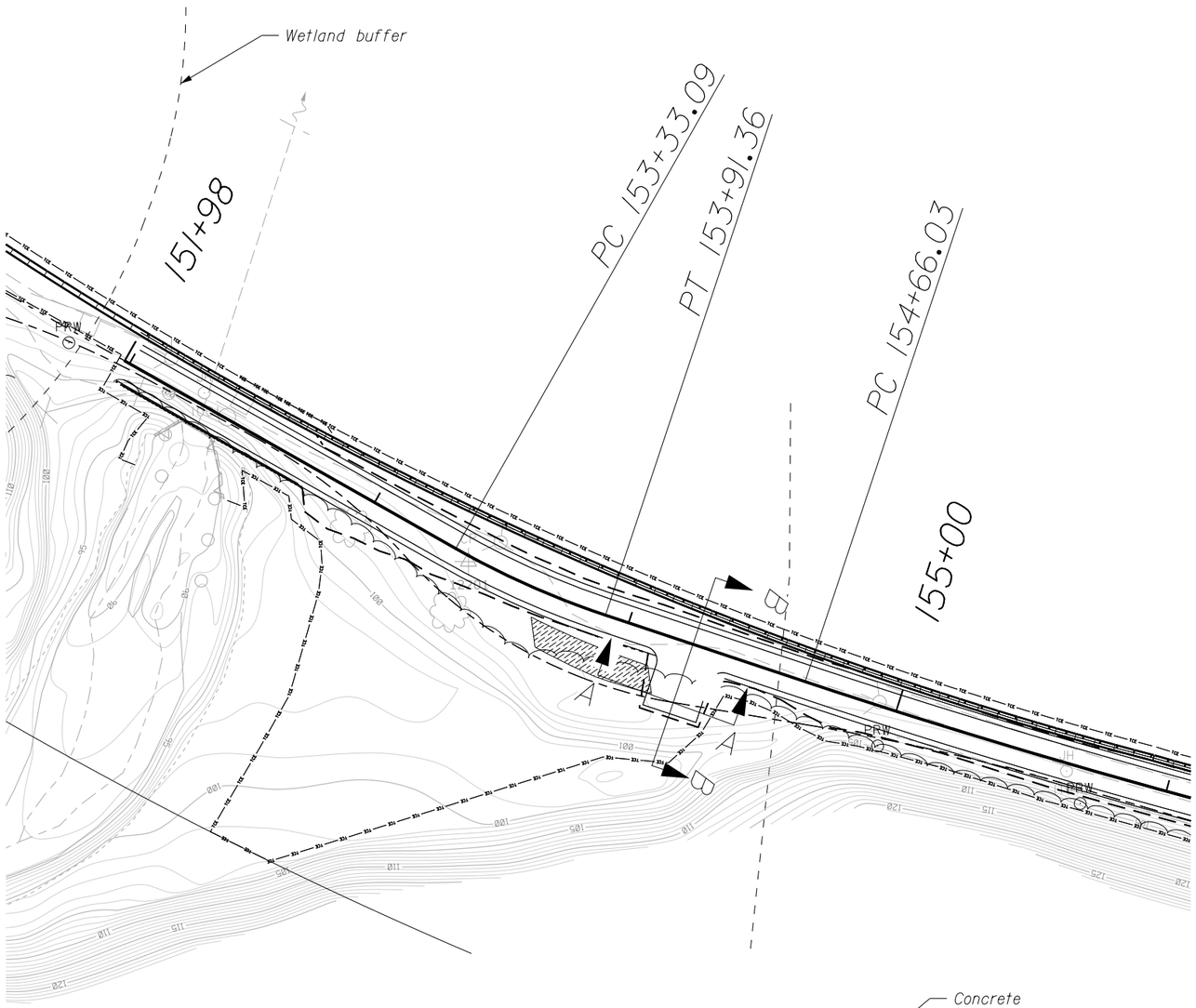

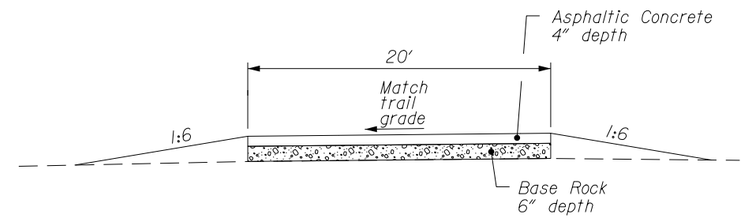

SECTION A-A

TRAIL STA 154+24 TURNOUT SECTION

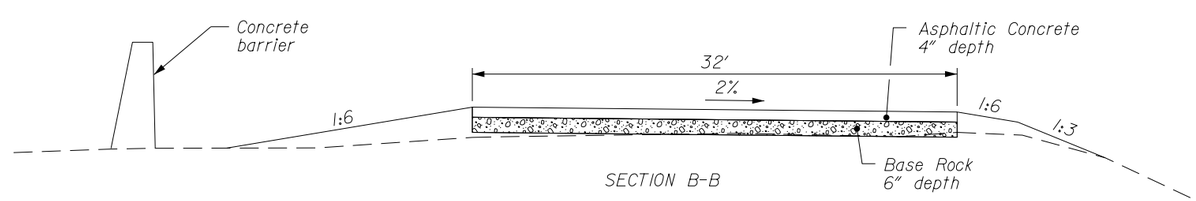

SECTION B-B

TRAIL STA 154+24 SECTION

TURNOUT DETAIL

S. Daleo	06/2014	J. Bland	06/2014
Designed by:	6/24/2014	Checked by:	06/2014

...\or-0001fs.dgn [int_ft2D]

STATE	PROJECT	SHEET NUMBER
OR	PFH 163(19)	D.9

FINAL DAP

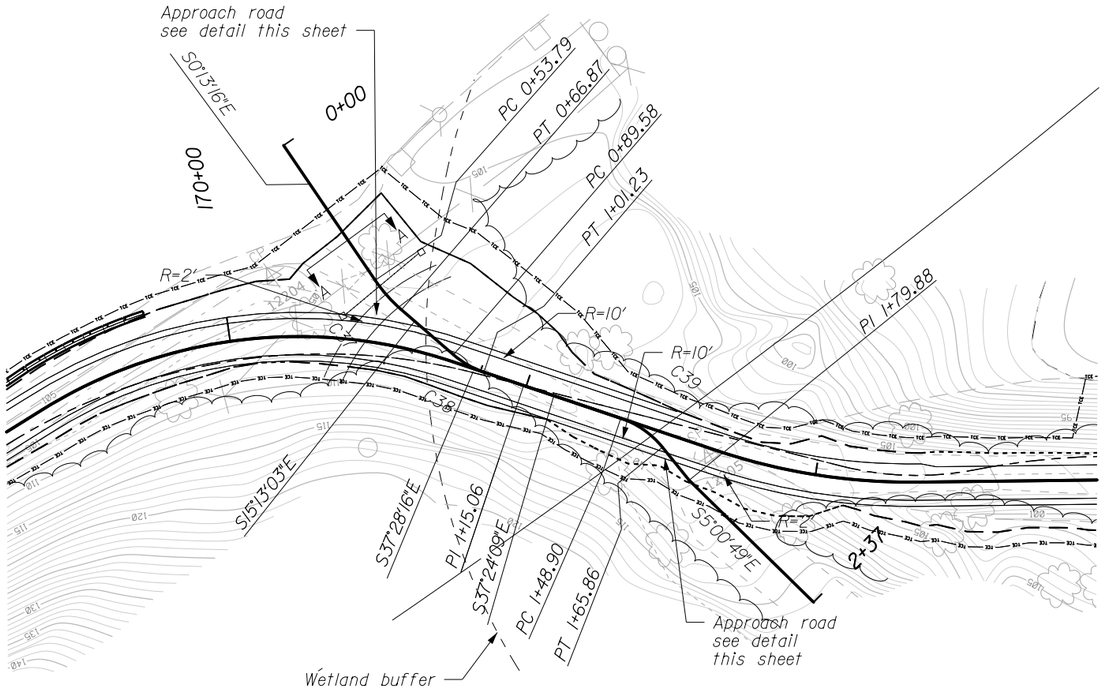

BPA ACCESS ROAD AT 170+80
PLAN

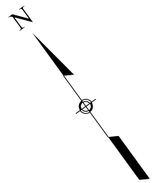

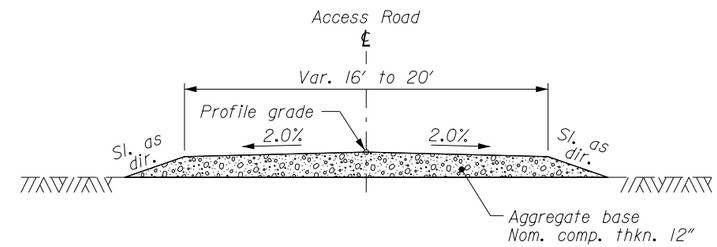

SECTION A-A

BPA ACCESS ROAD

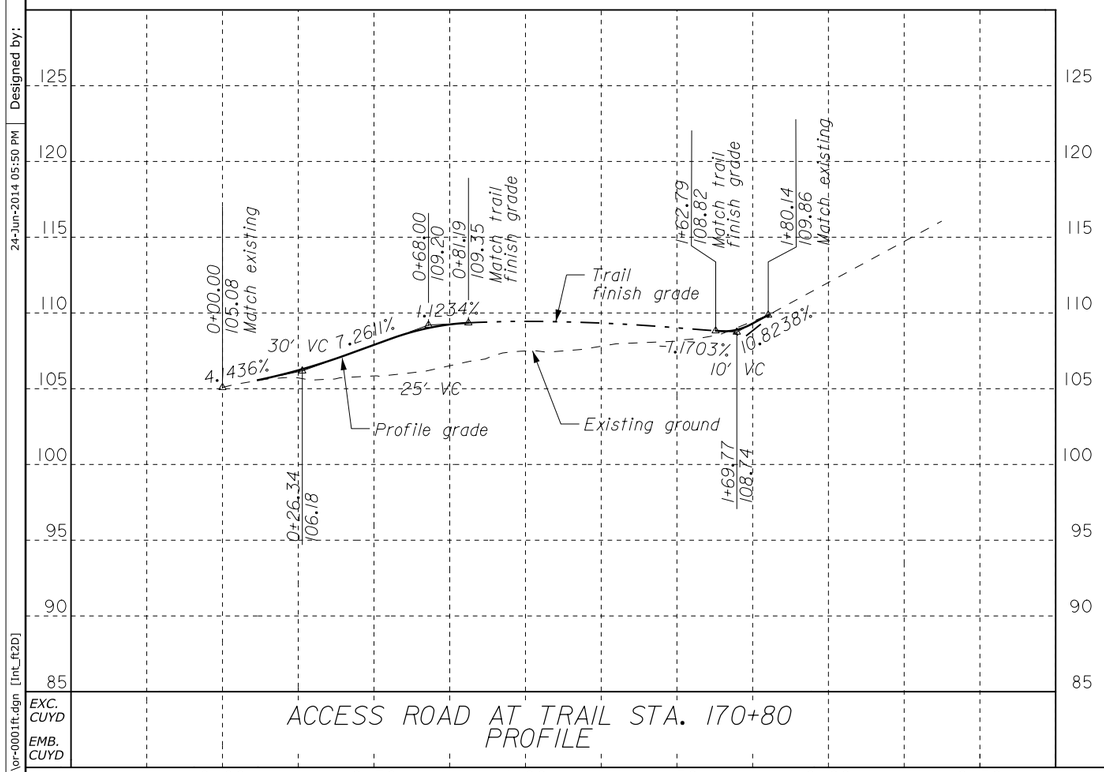

EXC. CUYD

EMB. CUYD

ACCESS ROAD AT TRAIL STA. 170+80
PROFILE

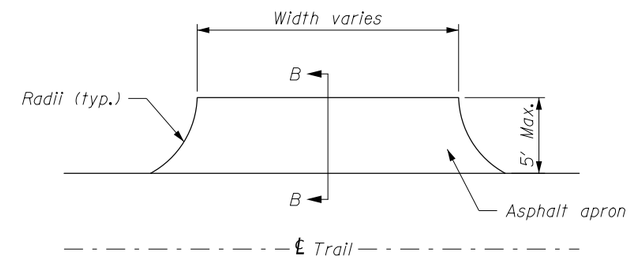

PLAN VIEW - Approach Road

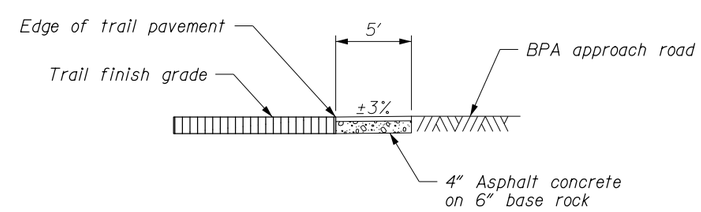

SECTION B-B

BPA ACCESS ROAD DETAIL

06/2014 | J. Bland | 06/2014 | S. Daleo | Checked by: | Designed by: | 24-Jun-2014 05:50 PM | ...\or-0001ft.dgn [Int_ft2D]

STATE	PROJECT	SHEET NUMBER
OR	PFH 163(19)	D.10

FINAL DAP

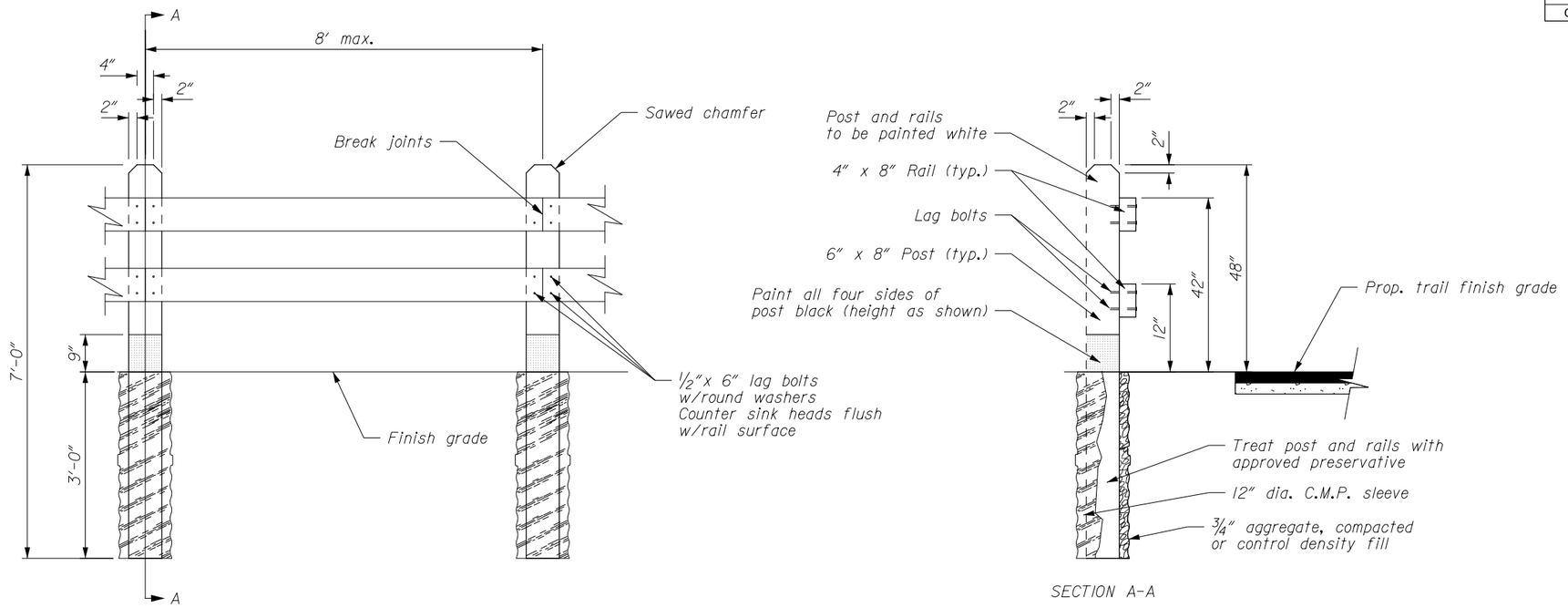

SECTION A-A

42" OR 48" WHITE WOOD RAIL

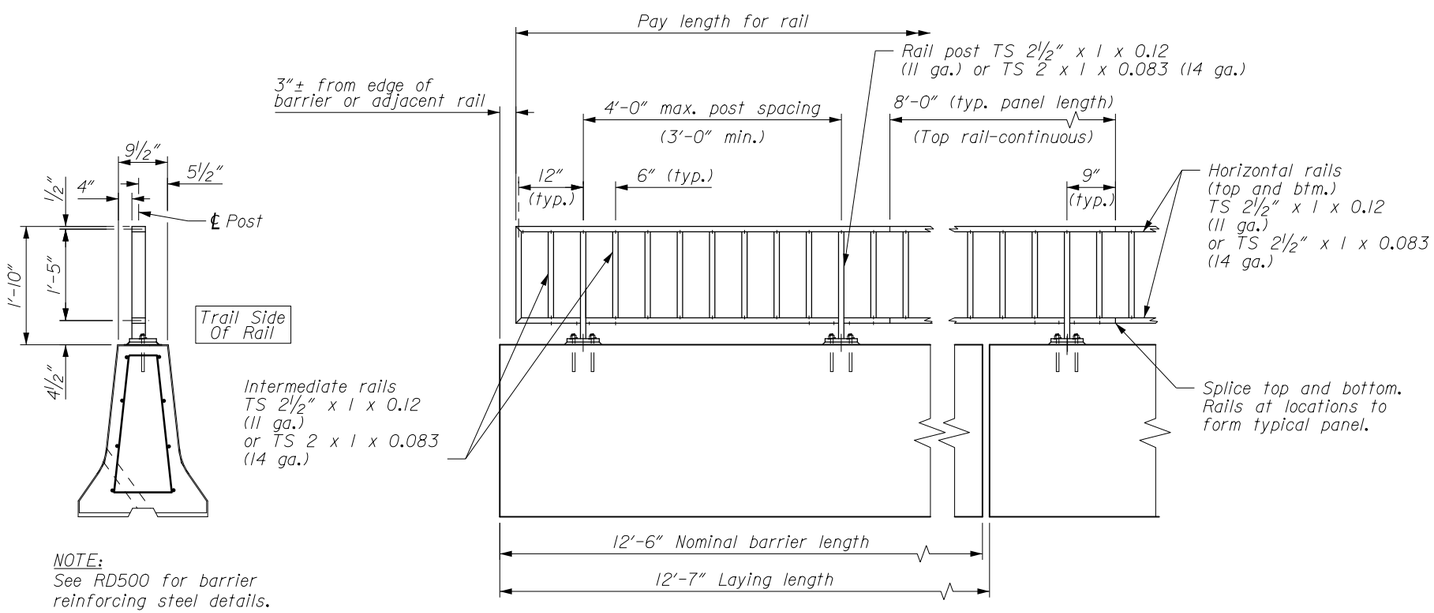

NOTE:
See RD500 for barrier
reinforcing steel details.

TYPICAL SECTION

ELEVATION

BARRIER MOUNTED RAIL

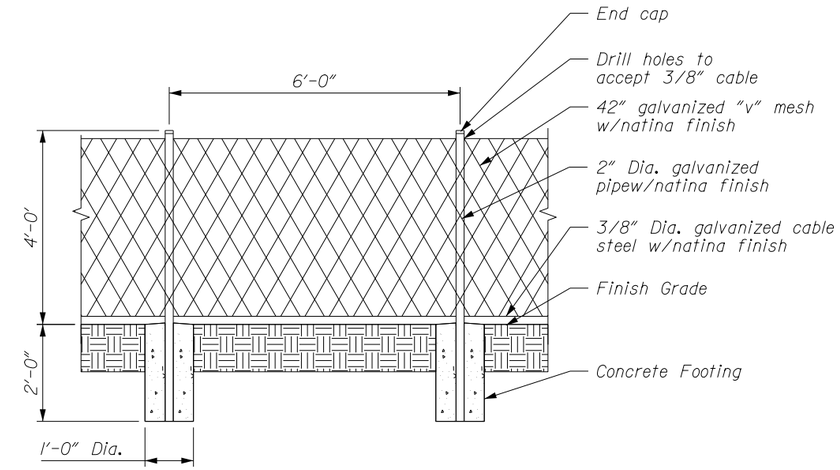

NOTE:
Hot dip galvanize all steel
materials after fabrication.

V-FENCE

RAILS
DETAIL

06/2014 J. Bland Checked by: 06/2014 S. Daleo Designed by: 6/24/2014 ...\or-0001fu.dgn [Int_ft2D]

STATE	PROJECT	SHEET NUMBER
OR	PFH 163(19)	D.11

FINAL DAP

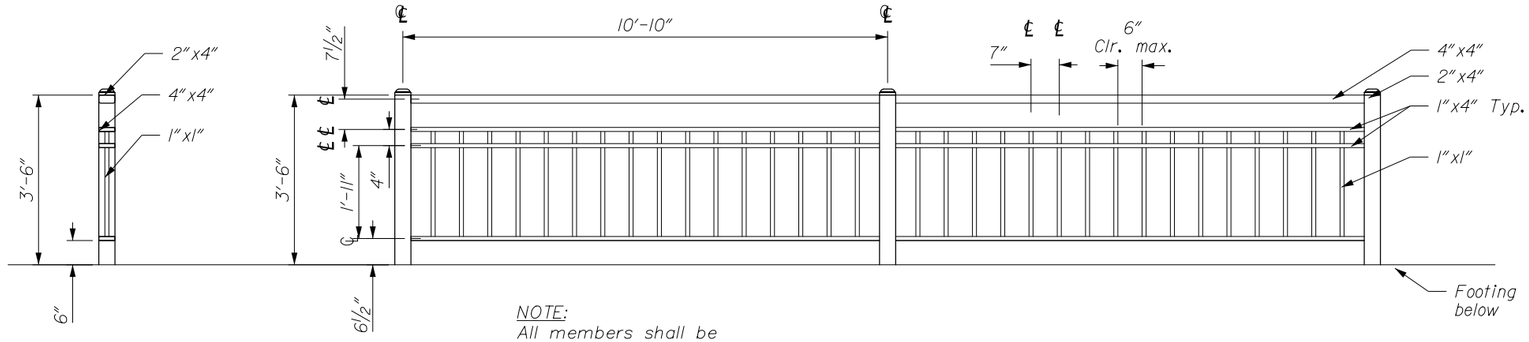

NOTE:
All members shall be galvanized steel w/Natina finish.

42" STEEL RAIL

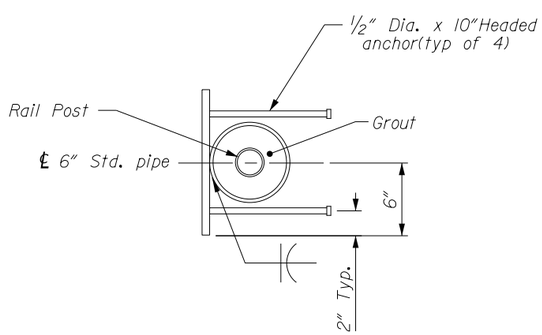

PLAN

NOTE:
Not in all locations.

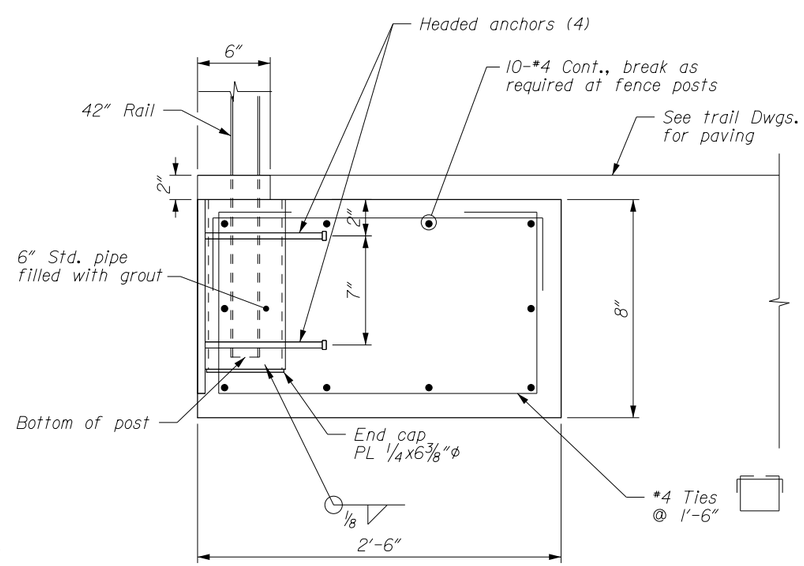

SECTION

SHALLOW-DEPTH FOUNDATION FOR 42" STEEL RAIL

42" STEEL RAIL DETAIL

Designed by: 24-Jun-2014 05:54 PM
Checked by: 06/2014 S. Daleo
J. Bland 06/2014
...\or-0001fv.dgn [Int_ft2D]

STATE	PROJECT	SHEET NUMBER
OR	PFH 163(19)	D.12

FINAL DAP

ROCKERY CUT-WALL DESIGN TABLE

STATION BEGIN	STATION END	LT/RT TIER	MAX. HEIGHT H_c (ft)	MIN. BASE ROCK WIDTH B (ft)	MAX. CUT SLOPE BATTER V:H (A.)	MIN. ROCK WEIGHT (lb) CAP ROCK	MIN. ROCK WEIGHT (lb) BASE ROCK
212+60	215+30	-	3.5	-	-	-	-

Rockery Design Data:

Friction angle, Ø = ___ °
Cohesion, c = 0
Bulk unit weight, γ_R = 149.7 lbf/ft³
Allowable bearing pressure = ___ lbf/ft²

(A.) Maximum cut slope batter for design purposes only.
Actual cut slope batter may be flatter.

ROCKERY FILL-WALL DESIGN TABLE

STATION BEGIN	STATION END	LT/RT TIER	MAX. HEIGHT H_f (ft)	MIN. BASE ROCK WIDTH B (ft)	MAX. CUT SLOPE BATTER V:H (A.)	MIN. ROCK WEIGHT (lb) CAP ROCK	MIN. ROCK WEIGHT (lb) BASE ROCK
197+50	198+14	-	3	-	-	-	-
217+15	217+35	-	4	-	-	-	-
218+05	218+30	-	4	-	-	-	-

Rockery Design Data:

Friction angle, Ø = ___ °
Cohesion, c = 0
Bulk unit weight, γ_R = 149.7 lbf/ft³
Allowable bearing pressure = ___ lbf/ft²

(A.) Maximum cut slope batter for design purposes only.
Actual cut slope batter may be flatter.

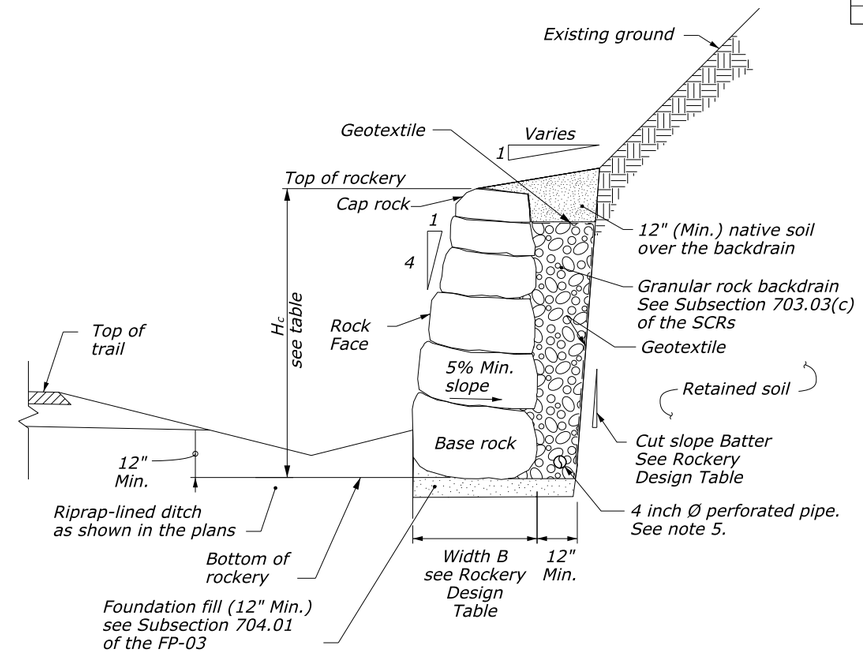

ROCKERY CUT-WALL TYPICAL SECTION

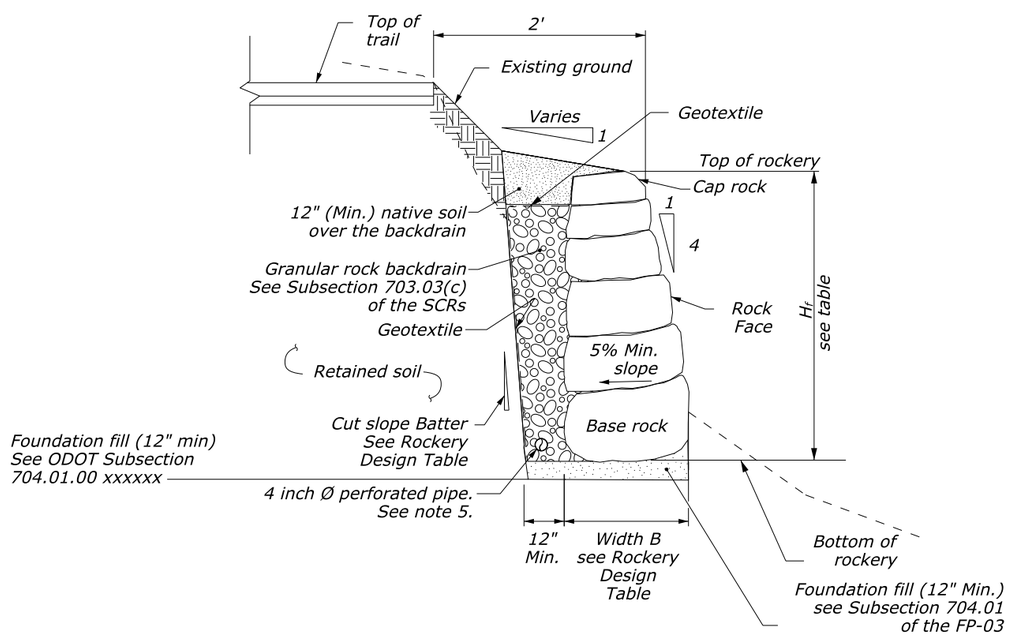

ROCKERY FILL WALL TYPICAL SECTION

NOTE:

1. Construct rockery and place base, facing, and cap rocks according to Section 252 of the SCRs. Place each rock individually by equipment suitable for lifting, manipulating, and placing rocks of the size and shape specified. Ensure that each rock is firmly set and supported by underlying materials and adjacent rocks. Reposition or replace loose rocks.
2. A maximum tolerance of 6 inches may be applied toward the total base rock width. Use rock with minimum L of 5 feet 6 inches. Do not consecutively place base rocks with widths less than B.
3. Place base, facing, and cap rocks so that their height dimension is not greater than their width. The longest dimension of the base, facing, and cap rocks is parallel to face of rockery.
4. Where loose, soft, or otherwise unsuitable foundation soil conditions are encountered, contact the CO for supplemental recommendations.
5. Discharge outlet pipes to a protected outlet or other permanent drainage structure at low points in the rockery and at 100 feet (max.) spacing.
6. Do not construct rockeries or slopes exceeding the heights shown on the Rockery Design Table without prior written approval by the CO.
7. Construct rockeries parallel to curb grade unless otherwise noted.

ROCKERY DETAIL

06/2014 J. Bland Checked by: 06/2014 S. Daleo Designed by: 24-Jun-2014 06:05 PM ...\or-0001fw.dgn [Int_ft2D]

STATE	PROJECT	SHEET NUMBER
OR	PFH 163(19)	E.1

FINAL DAP

Item 15703
SILT FENCE

LOCATION	QUANTITY (ft)
152+00 to 159+00	250
155+00 to 170+00	500
170+00 to 185+00	750
185+00 to 200+00	350

Item XXXXX
INLET PROTECTION

LOCATION	QUANTITY (ea)
152+00 to 155+00	1
155+00 to 170+00	3
170+00 to 185+00	1

Item XXXXX
HIGH VISIBILITY FENCE

LOCATION	QUANTITY (ft)
170+00 to 185+00	250

Item XXXXX
STRAW WATTLE

LOCATION	QUANTITY (ft)
170+00 to 185+00	1,800

Item XXXXX
MULCH

LOCATION	QUANTITY (sf)
152+00 to 155+00	3,000
155+00 to 170+00	6,000
170+00 to 185+00	20,000
185+00 to 200+00	5,000
200+00 to 215+00	1,000
215+00 to 218+46	500

Item XXXXX
ENERGY DISSIPATOR

LOCATION	QUANTITY (ea)
170+00 to 185+00	2

NOTES:

1. See sheet E.9 for silt fence details.
2. See sheet E.10 for inlet protection details.
3. See sheet E.11 for straw wattle details.

TABULATION OF EROSION CONTROL QUANTITIES

Designed by: N. Williams 06/2014 | Checked by: S. Mader 06/2014

24-Jun-2014 06:00 PM

...\or-0001da.dgn [Int_ft2D]

STATE	PROJECT	SHEET NUMBER
OR	PFH 163(19)	E.2

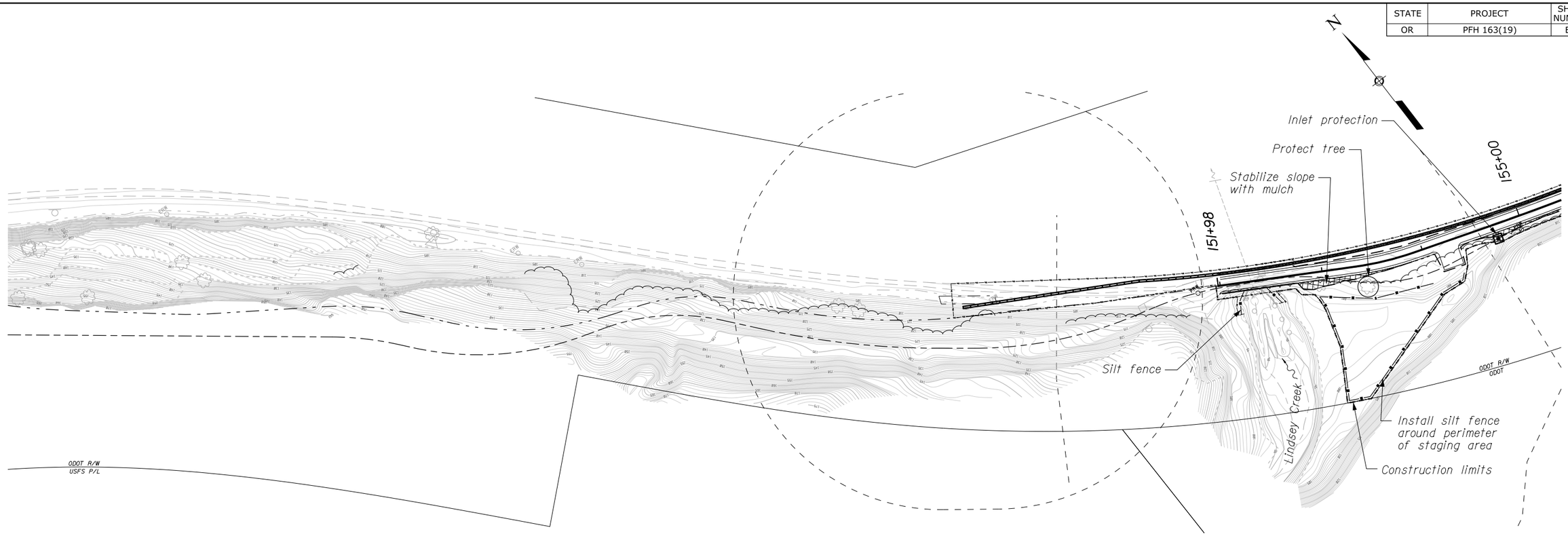

LEGEND	
DEVICE	SYMBOL
Silt fence	
Highly visible construction fence	xx-xxxx
Area to stabilize with mulch	
Straw wattle	
Tree protection	
Inlet protection	
Identified wetlands	
Energy dissipator	

EROSION CONTROL PLAN

Designed by: N. Williams 06/2014
Checked by: S. Mader 06/2014
6/24/2014
...\or-0001db.dgn [Int_ft2D]

STATE	PROJECT	SHEET NUMBER
OR	PFH 163(19)	E.3

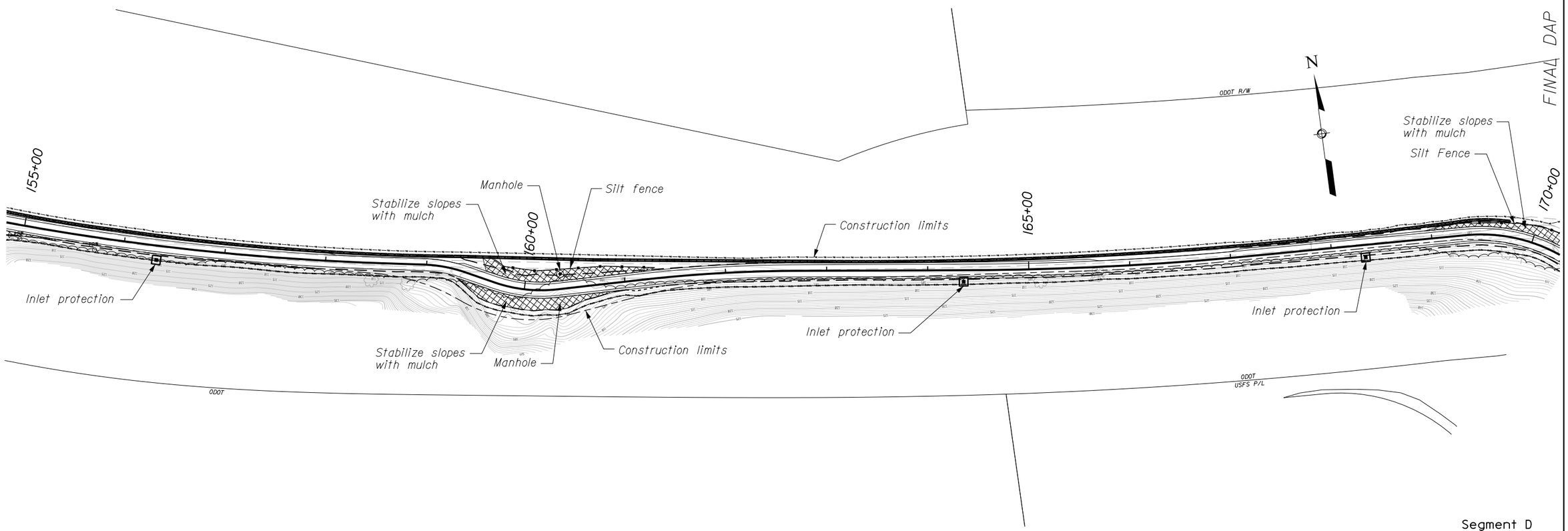

EROSION CONTROL PLAN

...\or-0001dc.dgn [Int_ft2D] | Designed by: N. Williams | 06/2014 | Checked by: S. Mader | 06/2014

STATE	PROJECT	SHEET NUMBER
OR	PFH 163(19)	E.4

FINAL DAP

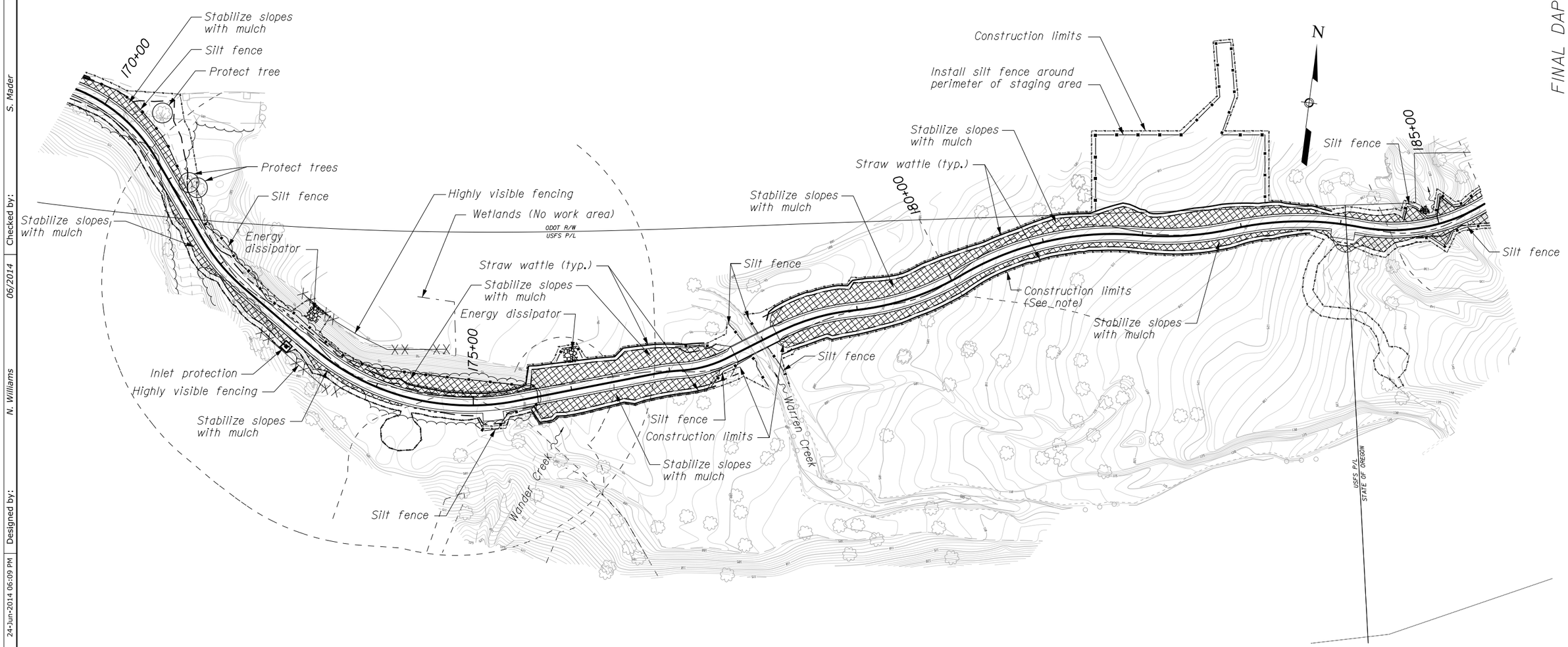

NOTE:

Construction limits for forest restoration project not shown.

EROSION CONTROL PLAN

06/2014 S. Mader Checked by: 06/2014 N. Williams Designed by: 24-Jun-2014 06:09 PM ..\or-0001dd.dgn [Int_ft2D]

STATE	PROJECT	SHEET NUMBER
OR	PFH 163(19)	E.5

FINAL DAP

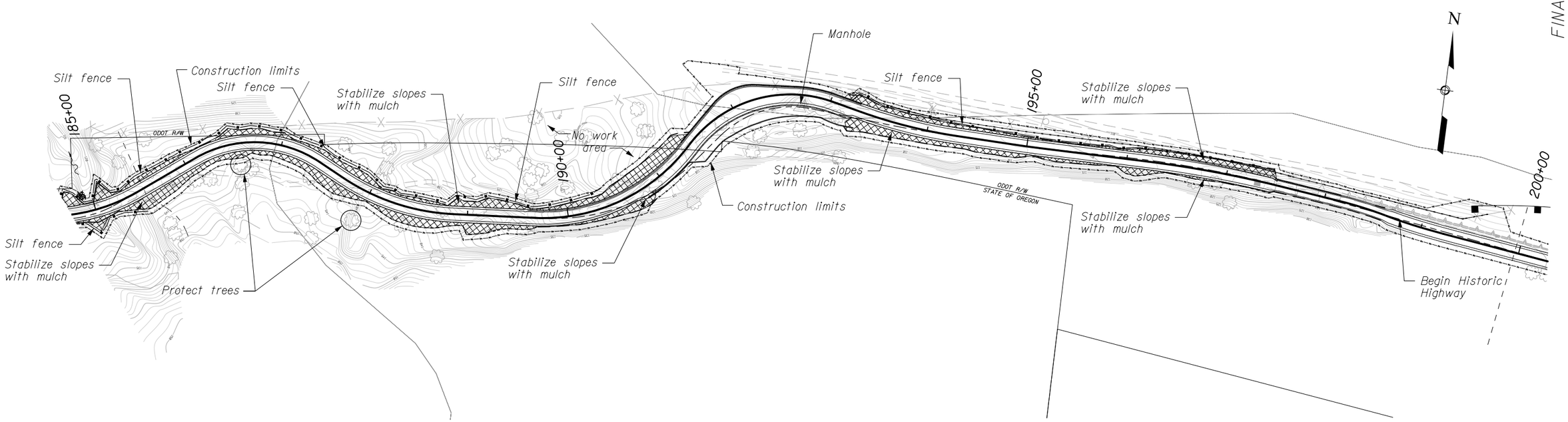

EROSION CONTROL PLAN

06/2014 | S. Mader | 06/2014 | N. Williams | 24-Jun-2014 06:12 PM | Designed by: | Checked by: | ...\or-0001de.dgn [Int_ft2D]

STATE	PROJECT	SHEET NUMBER
OR	PFH 163(19)	E.6

FINAL DAP

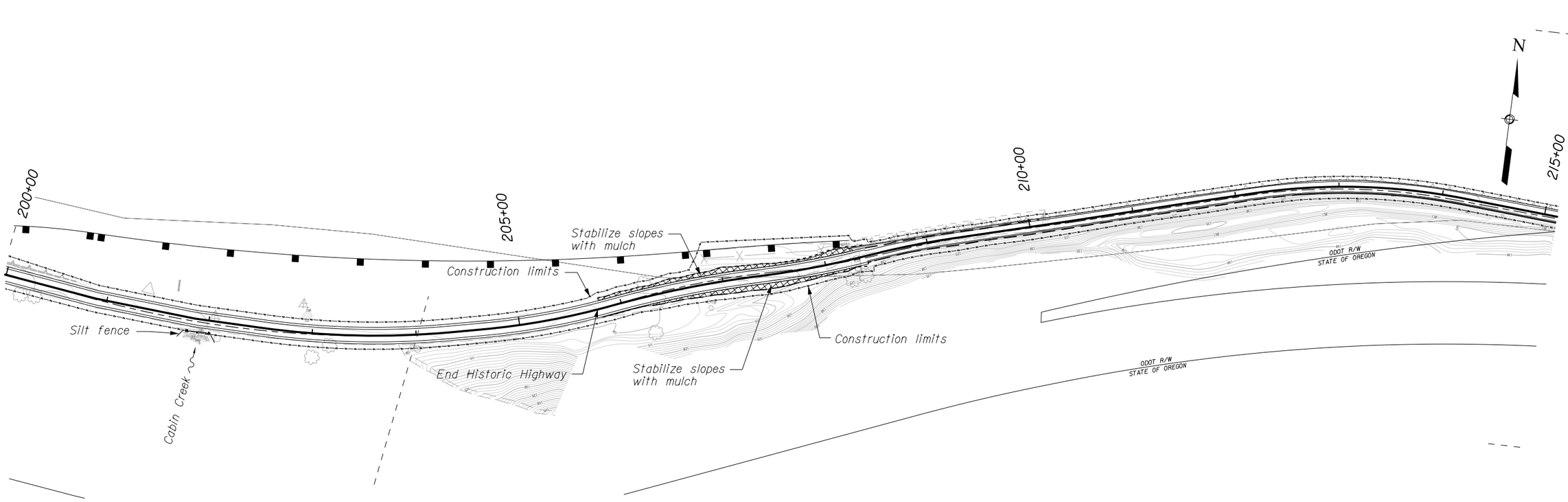

EROSION CONTROL PLAN

...\or-0001df.dgn [Int_ft2D] | 24-Jun-2014 04:02 PM | Designed by: N. Williams | 06/2014 | Checked by: S. Mader | 06/2014

STATE	PROJECT	SHEET NUMBER
OR	PFH 163(19)	E.7

FINAL DAP

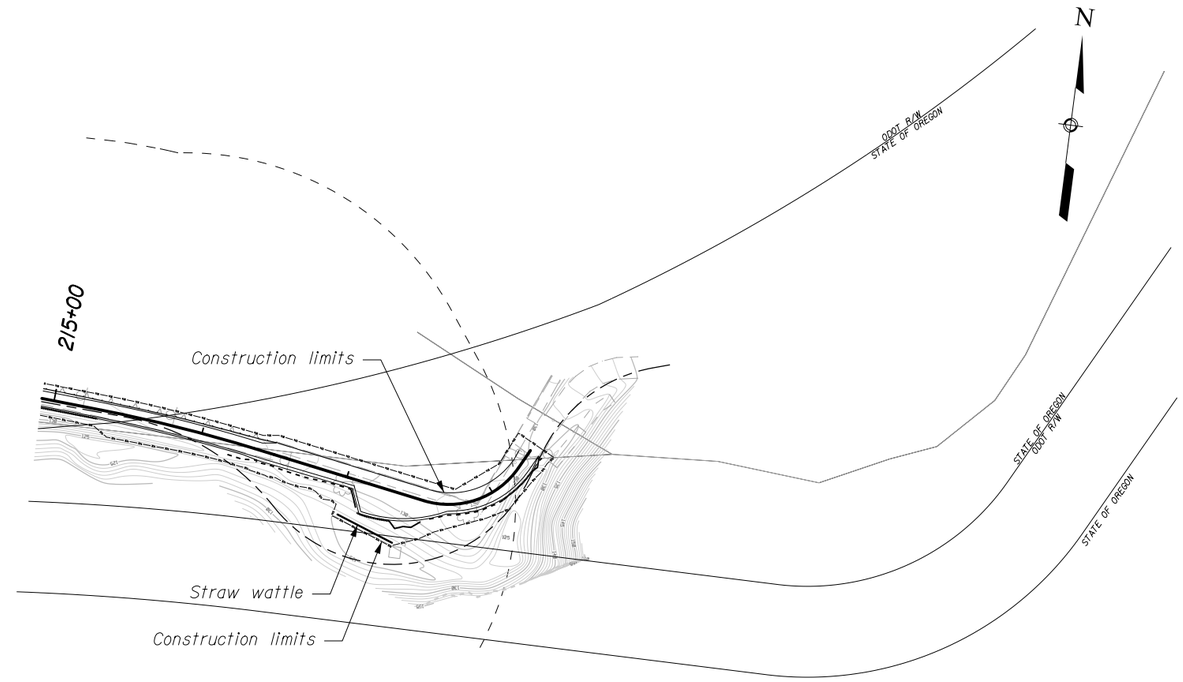

EROSION CONTROL PLAN

Designed by:	6/24/2014	Checked by:	06/2014	N. Williams	06/2014	S. Mader	06/2014

...\or-0001dg.dgn [Int_ft2D]

FINAL DAP

Narrative Description

The proposed project includes improving connectivity and to connect the intact and abandoned segments of Historic Columbia River Highway (HCRH) Trail for recreational uses. This portion of the trail runs from Lindsey Creek to the Starvation Creek Trailhead project. The proposed HCRH segment starts at the Lindsey Creek area and meanders east along the south side of I-84. This segment of trail terminates at Starvation Creek Trailhead where it matches into an existing trail. The route of the proposed project would pass through land owned by the State of Oregon (ODOT right of way and Oregon Parks and Recreation Department), and federal land managed by the USDA Forest Service. The proposed project will follow the HCRH State Trail Guidelines (ODOT 2011).

Existing Conditions and Project Description

The topography of the project area would generally be described as rolling to mountainous terrain. The first 2,000 feet of the trail is a gently rolling longitudinal grade with the right side of the trail running at the base of an existing slope with grades up to approximately a 1:1 H:1V. The close proximity of the steep side slope creates a topographic as well as a design constraint to avoid cutting into the slope. As the trail veers away from the I-84 shoulder, the existing terrain steepens as the trail follows grades rolling up and back down at 5%. The terrain flattens as the trail reaches an existing segment of the historic highway. From the historic highway to the Starvation Creek Trailhead the trail width is constrained between the existing I-84 exit ramp to Starvation Creek Trailhead and a steep 1 H:1V slope that transitions into a rock fall catchment berm.

General Sequencing of Erosion and Sediment Control Practices

Numerous Best Management Practices (BMPs) outlined in the erosion and sediment control sheets will be implemented throughout the construction of the trail. The primary intent of the selected BMPs is to prevent erosion and to control sediment transport, prior to final stabilization. The primary BMPs presented in this erosion and sediment control design include:

1. Preserve existing vegetation. Highly visible fencing, and prior flagging of disturbance limits will be implemented to preserve existing vegetation to the extent practicable. Preserving vegetation will also act as a vegetative buffer to minimize stormwater velocity and control sediment transport.
2. Temporarily stabilize disturbed, or placed soils, with mulch. Mulch stabilization will minimize active erosion on disturbed soils prior to final stabilization. Mulch will be applied in conjunction with proper surface roughening techniques, which will minimize stormwater velocity and prevent erosion.
3. Silt fence down gradient of land disturbing activities. Silt fence will be installed on contour to capture sediment in stormwater runoff downgradient of construction activities.
4. Straw wattles. Straw wattles will be installed on disturbed slopes to minimize stormwater velocity and prevent erosion.
5. Inlet Protection. Stormwater collection features will be protected with inlet protection to minimize sediment discharge into stormwater conveyance systems.

Erosion and Sediment Control Notes

1. The predominant soil type in the area is prone to water erosion. Therefore the implementation of erosion control practices must be an integral part of all aspects of construction.
2. The implementation of these erosion control plans and the construction, maintenance, replacement, and upgrade of these facilities is the responsibility of the contractor until all construction is completed, approved, and the site is stabilized.
3. The erosion control measures shown in these plans must be constructed in connection with all grading activities and in such a manner to insure that sediment and sediment laden water does not enter the receiving water bodies, nearby sensitive areas, or stormwater conveyance systems.
4. The erosion and sediment control BMPs shown on this plan are the minimum requirements for anticipated site conditions, during the active construction period, these erosion and sediment control BMPs shall be maintained and upgraded as needed for unexpected storm events and to insure that sediment laden water does not leave the construction site.
5. Temporarily stabilize existing bare soil areas by spreading straw mulch and crimping into the surface. The application rate for straw mulch is 2,500 lbs per acre. Permanently seed the disturbed upland areas using the seed mix and planting specified in the Final Landscaping Plan.
6. Silt fence will be installed on contour at the locations specified in erosion and sediment control sheets. Silt fence will be installed per detail on E.10 in accordance with Standard Detail 157-1. Silt fence will remain in place until final stabilization has occurred.
7. Straw wattles will be installed on contour, perpendicular to the flow velocity, at the locations specified erosion and sediment control drawings. Straw wattles will be installed per detail on Sheet E.11. Straw wattles will remain in place for the duration of the project and will be left in place at the end of the project.
8. Land disturbing activitieswill be conducted under ODOT's existing 1200-CA.

INSPECTION FREQUENCY

Site Condition	Minimum Frequency
1. Active Period	Daily when stormwater runoff, including runoff from snowmelt, is occurring. At least once every two weeks, regardless of whether or not runoff is occurring.
2. Prior to the site becoming inactive or in anticipation of site inaccessibility.	Once to ensure that erosion and sediment control measures are in working order. Any necessary maintenance and repair must be made prior to leaving the site.
3. Inactive periods greater than fourteen (14) calendar days.	Once every two (2) weeks.
4. Periods during which the site is inaccessible due to inclement weather.	If practical, inspections must occur daily at a relevant and accessible discharge point or downstream location.

EROSION CONTROL PLAN

FINAL DAP

NOTE:

1. Use drainage ditch installation for low flow conditions only when specified on Erosion Control Plan.
2. Alternate preassembled silt fence options will be allowed as long as specified dimensions are satisfied. Follow manufacturer's recommendations for installation procedures. All types must ensure silt fence remains attached to, and does not slide down, supporting posts.
3. Install silt fence along ground contours. Curve ends of silt fence upgrade to prevent water from running around the ends.
4. 10 ft. (max.) spacing with fence support.
   6 ft. (max.) spacing without fence support.

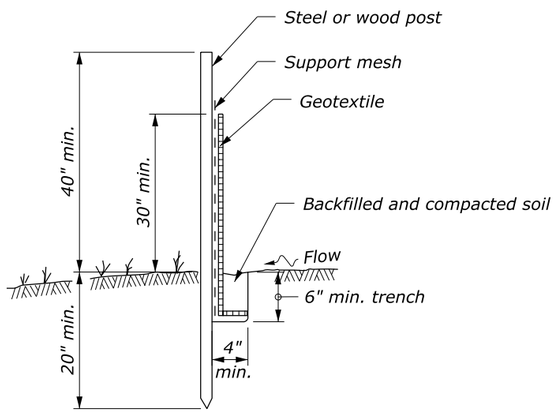

POST AND GEOTEXTILE INSTALLATION DETAIL

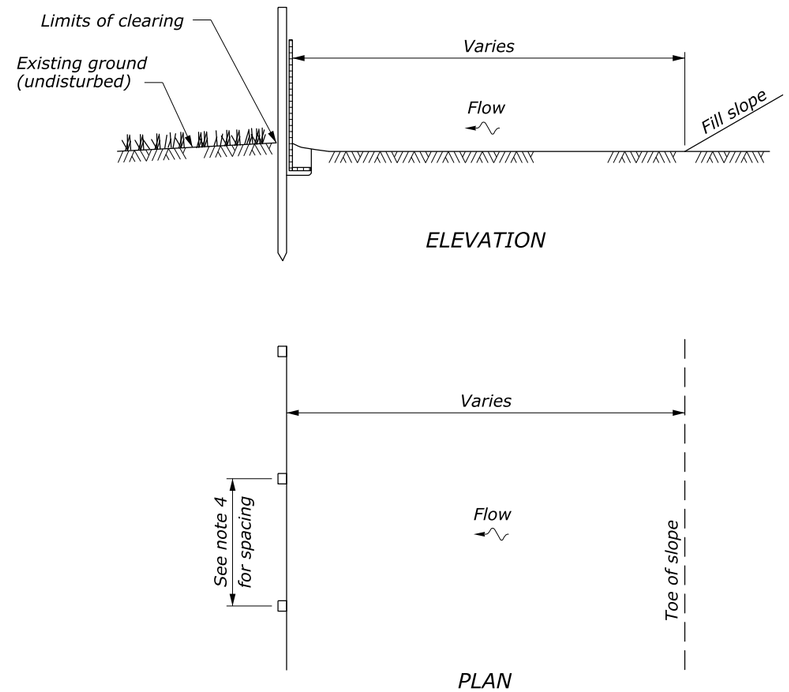

SILT FENCE INSTALLATION AT TOE OF FILL

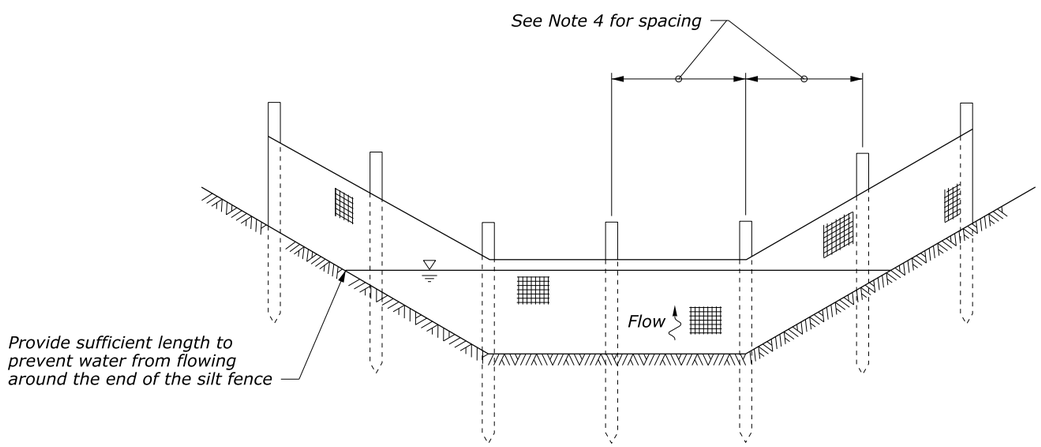

SILT FENCE INSTALLATION IN A DRAINAGE DITCH

See Note 1

NO SCALE

U.S. DEPARTMENT OF TRANSPORTATION
FEDERAL HIGHWAY ADMINISTRATION
FEDERAL LANDS HIGHWAY

U.S. CUSTOMARY STANDARD

SILT FENCE

STANDARD APPROVED FOR USE 6/2005

REVISED: 6/2007
DRAFT: 3/2014

STANDARD 157-1

19 June 2014 10:28 AM c:\pw_workdir\ch2mhill_tbg\ovegvary\d0263395\or-0001di.dgn [USC]

STATE	PROJECT	SHEET NUMBER
		E.10

FINAL DAP

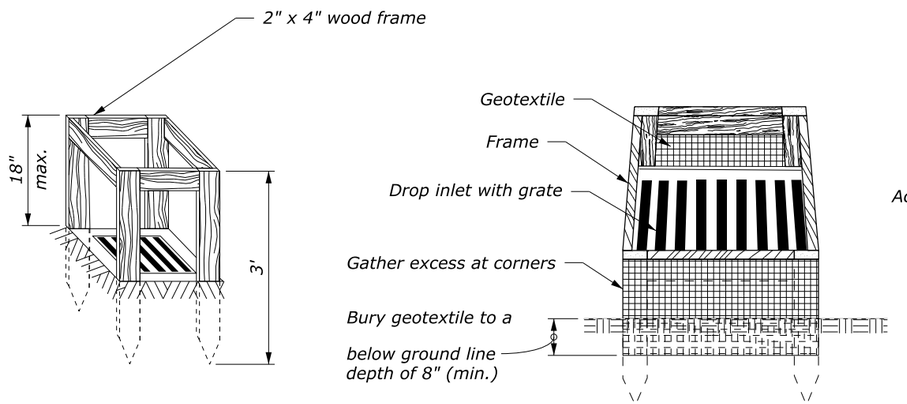

SILT FENCE DROP INLET PROTECTION (TYPE A)

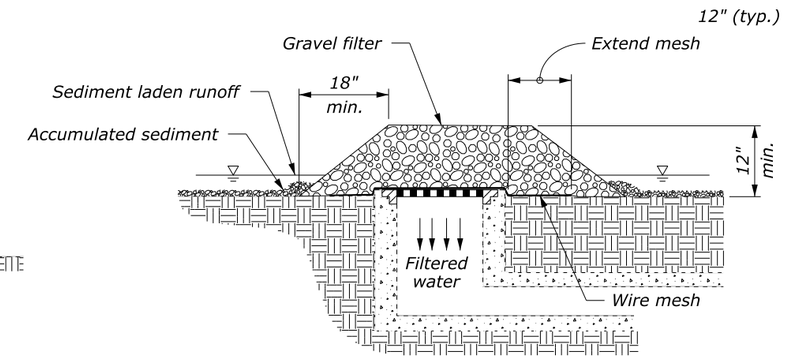

GRAVEL AND WIRE MESH DROP INLET PROTECTION (TYPE B)

NOTE:

1. For gravel filters use 2"- 3" diameter coarse aggregate.
2. Use wire mesh with ½" x ½" openings.
3. Use type A inlet protection in sump locations only.
4. Use type B inlet protection only in sump locations where heavy concentrated flows are not expected. Do not use where ponding around the structure might cause inconvenience or damage.

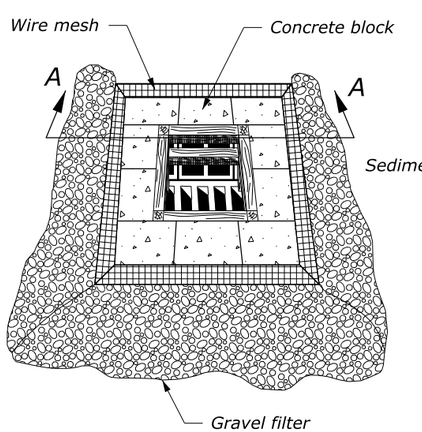

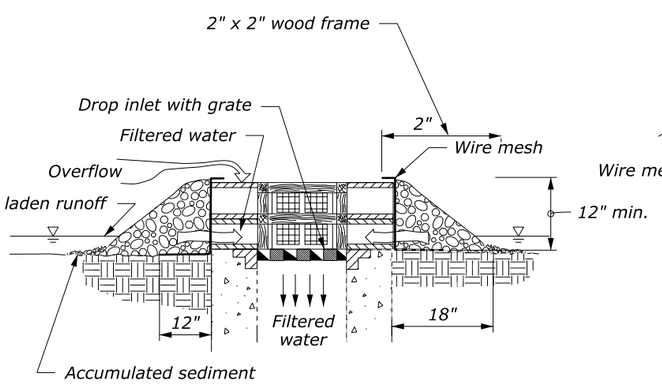

SECTION A-A

BLOCK AND GRAVEL DROP INLET PROTECTION (TYPE C)

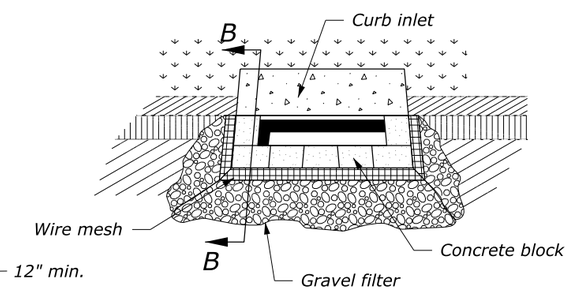

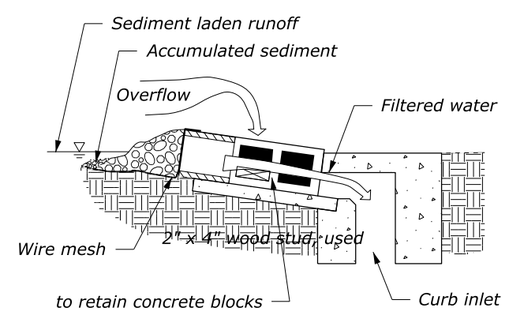

SECTION B-B

CURB INLET PROTECTION, BLOCK AND GRAVEL (TYPE D)

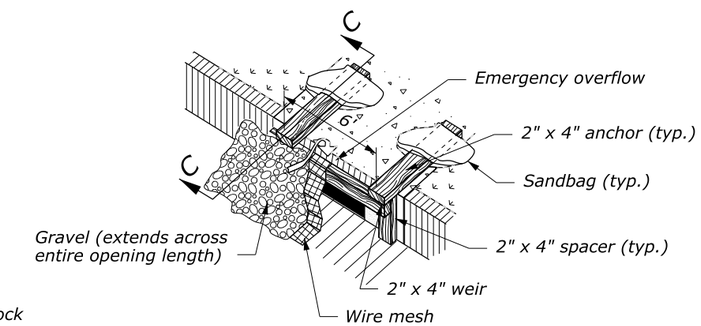

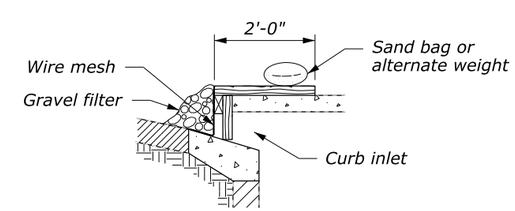

SECTION C-C

CURB INLET PROTECTION, WOODEN WEIR (TYPE E)

NO SCALE

U.S. DEPARTMENT OF TRANSPORTATION
FEDERAL HIGHWAY ADMINISTRATION
FEDERAL LANDS HIGHWAY

U.S. CUSTOMARY STANDARD

TEMPORARY INLET PROTECTION

STANDARD APPROVED FOR USE 6/2005

REVISED:
DRAFT: 3/2014

STANDARD 157-2

19 June 2014 10:32 AM c:\pw_workdir\ch2mhill_tbg\ovegvary\d0263395\or-0001dj.dgn [USC]

STATE	PROJECT	SHEET NUMBER
		E.11

FINAL DAP

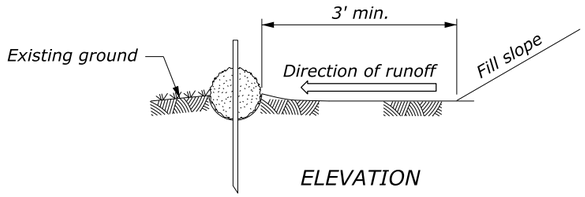

ELEVATION

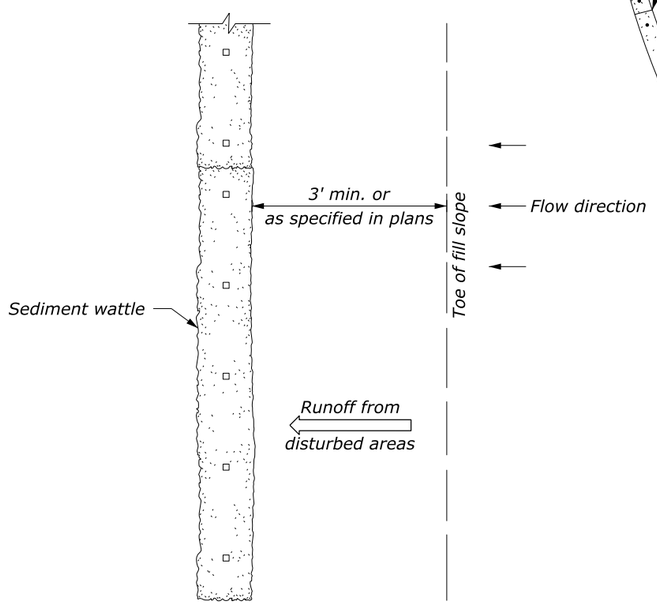

PLAN

INSTALLATION BEYOND TOE OF SLOPE

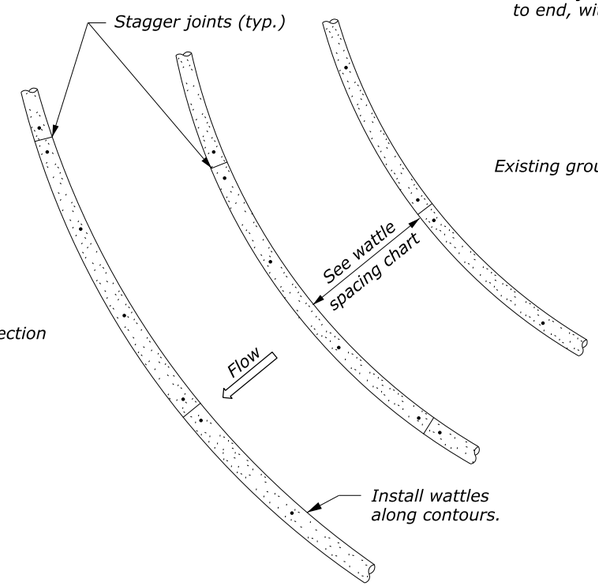

INSTALLATION ALONG SLOPES

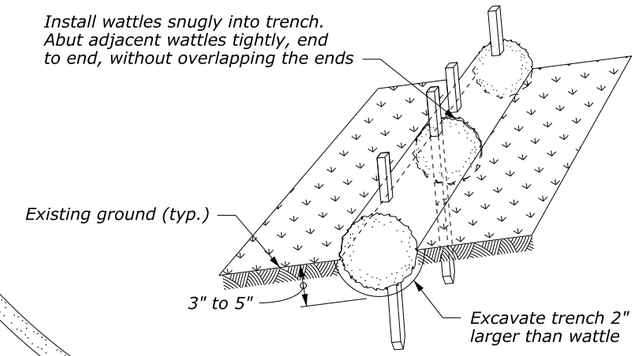

Step 1: Excavate trench and install wattles

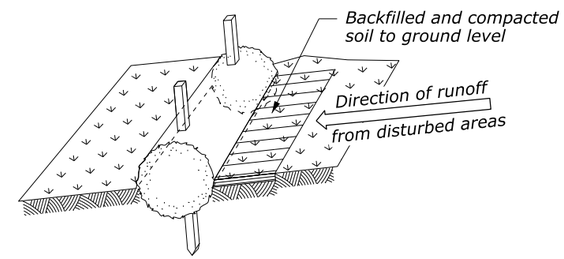

Step 2: Backfill soil against wattles

PROPERLY STAKED AND ENTRENCHED WATTLE

NOTE:

1. Drive stakes at each end and at 4' spacing until wattle is secure to slope. Do not crush wattle while staking. Live stakes may be used for permanent installations.
2. Use drainage ditch installation only in low flow conditions.

STAKES REQUIRED	
Wattle length (ft)	Stakes required for each wattle
25	8
20	6
12	4

WATTLE SPACING	
Slope	Spacing (ft)
1:4 or flatter	40
1:3	30
1:2	20
1:1	10

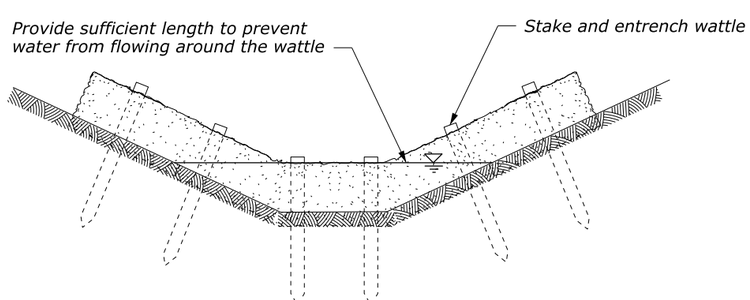

ELEVATION

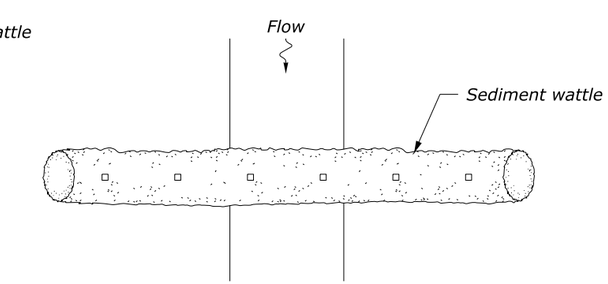

PLAN

DRAINAGE DITCH INSTALLATION

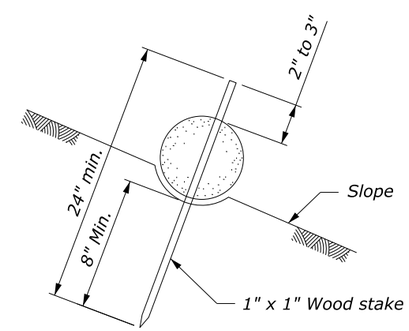

WATTLE STAKING DETAIL

NO SCALE

U.S. DEPARTMENT OF TRANSPORTATION
FEDERAL HIGHWAY ADMINISTRATION
WESTERN FEDERAL LANDS HIGHWAY DIVISION

U.S. CUSTOMARY DETAIL

SEDIMENT WATTLE

DETAIL APPROVED FOR USE 9/2007

REVISED:

DETAIL W157-20

c:\pw_workdir\ch2mhill_tbg\ovegvary\d0263395\or-0001dk.dgn [USC] 19 June 2014 10:35 AM

STATE	PROJECT	SHEET NUMBER
OR	PFH 163(19)	E.12

FINAL DAP

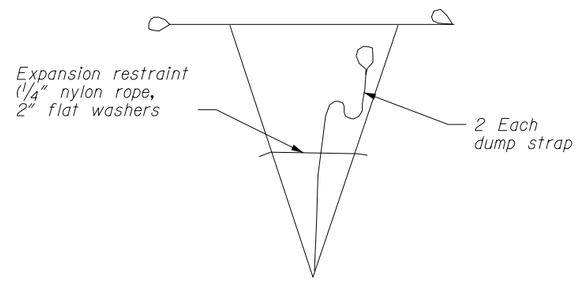

BAG DETAIL

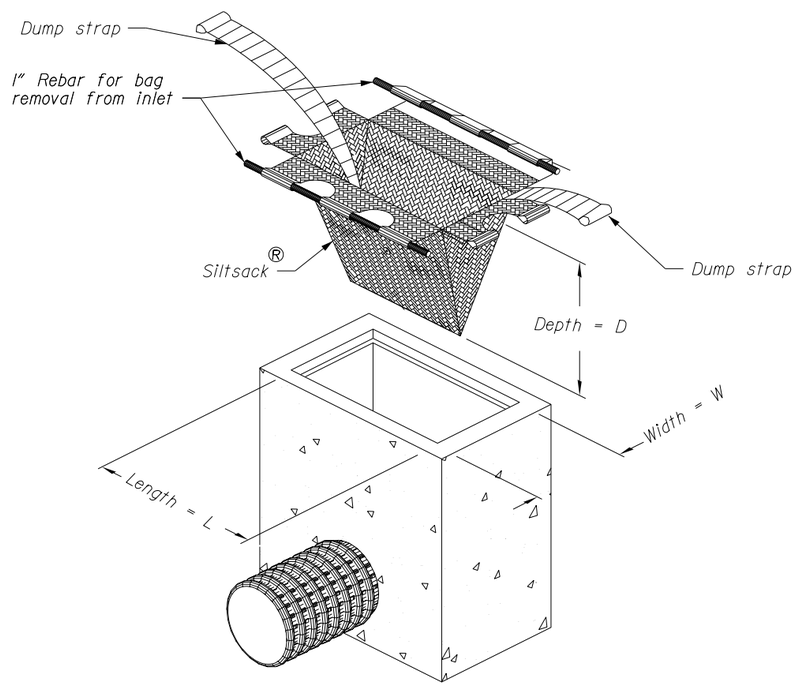

REGULAR FLOW ONLY
DO NOT USE HIGH FLOW INSERT BAGS.

CATCH BASIN INSERT BAG

EROSION CONTROL DETAILS

...\or-0001dl.dgn [Int_ft2D] | 24-Jun-2014 04:44 PM | Designed by: N. Williams 06/2014 | Checked by: S. Mader 06/2014

Note: The quantities shown hereon are approximate and are subject to field adjustments.

TABULATION OF DRAINAGE QUANTITIES

STATE	PROJECT	SHEET NUMBER
OR	PFH 163(19)	F.1

PAY ITEM NUMBER			20301 -1900	20411 -0000	Select Borrow (foundation preparation) (TON) 1/	20701 -0300	20701 -1400	25101 -2000	25101 -4000	60201 -0400	60201 -0800	60201 -0900	60201 -1000	60201 -1600	60203 -0200	Catch Basin (EACH)	60501 -0000	Allow. Pipe Material (See key below)	Skew (degrees)	REMARKS / FOOTNOTES See below for numbered footnotes
STATION	EST MAX COVER (FT)	STR EXC (CUYD)	Removal of Pipe Culvert (EACH)	Select Borrow (TON)		Earthwork Geotextile, Type I-C (SQYD)	Earthwork Geotextile, Type IV-C (SQYD)	Placed Riprap, Class 2 (CUYD) 2/	Placed Riprap, Class 4 (CUYD)	Pipe Culvert (LNFT)					6-inch Slotted Drain Pipe (LNFT) 4/		Standard Underdrain (LNFT)			
DIAMETER or SPAN x RISE (inch)										12"	18"	24"	30"	36"						
160+39											15									Extend Existing 18" CMP Drainage Culvert
152+00 to 171+00											1561					5				18" Drain Pipe in place of I-84 Ditch with G-2 Inlets for
173+05											35									18" Drainage Culvert
176+05											48									18" Drainage Culvert
192+70											7									Extend Existing 18" CMP Drainage Culvert
CUMULATIVE TOTAL		0	0	0	0	0	0	0	0	0	1666	0	0	0	0	5	0			

NOTES:

1. Steel pipe culvert minimum wall thickness is the larger of 0.064" or the thickness required by the Std. 602-1 fill height table.
2. Aluminized steel pipe culvert minimum wall thickness is the larger of 0.064" or the thickness required by the Std. 602-1 fill height table (steel).
3. Aluminum pipe culvert minimum wall thickness is the larger of 0.060" or the thickness required by the Std. 602-1 fill height table.
4. Structural excavation quantities are provided for information only. Historically 30% of culvert structure excavation is unsuitable material. See sheet G.8 for structural excavation detail.
5. Where insufficient existing ground topographic information is available the invert elevation, outlet elevation, and culvert length for pipe culverts is approximate.
6. The symbol "X" denotes for information only locations.

FOOTNOTES:

1/ For information only.
2/ Install Energy Dissipator.
3/ Construct Riprap headwall.
4/ Install Blanket Drain.
5/ Locations of culvert outlet ditches shown in plan sheets are approximate.

Allowable pipe culvert material

A	Aluminum
AS	Aluminized steel
GS	Galvanized steel
P	Plastic

NPS Pkg. No. 100633 & 90935A NPS Drwg. No. 184/80269

6/2014 R. Attanasio Checked by: 6/2014 G. Hunsaker Designed by: 24-Jun-2014 c:\pw_workdir\ch2mhill_tbg\ovegvary\d0176884\{OR1001_SegD_Drainage.xls}US_Customary

STATE	PROJECT	SHEET NUMBER
OR	PFH 163(19)	F.2

FINAL DAP

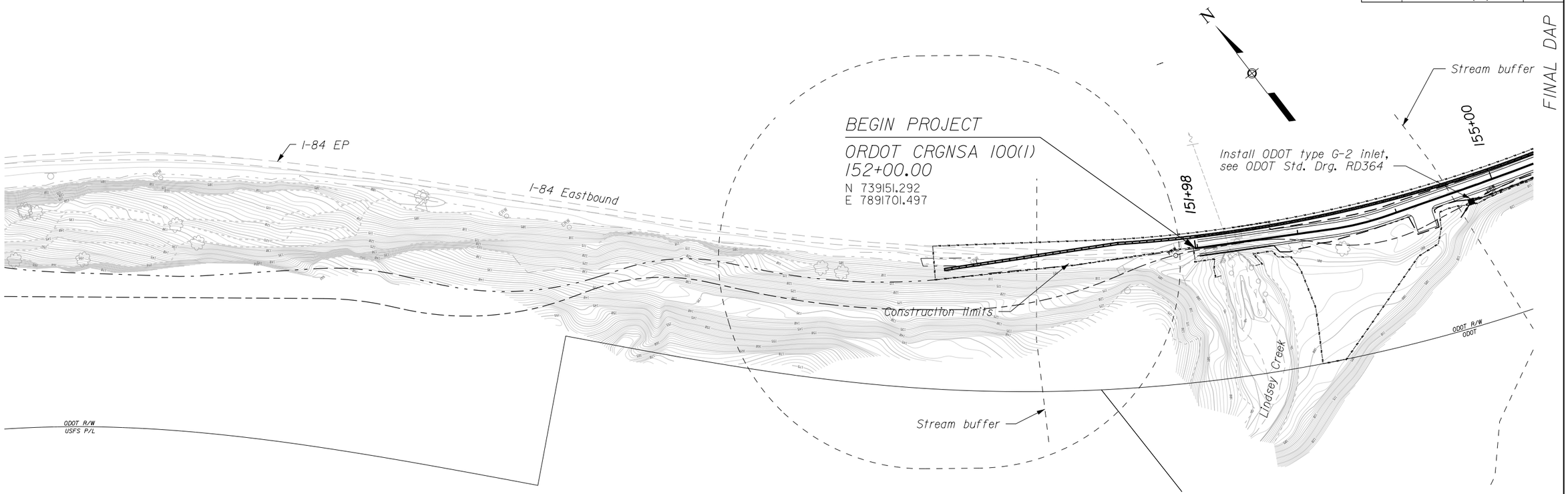

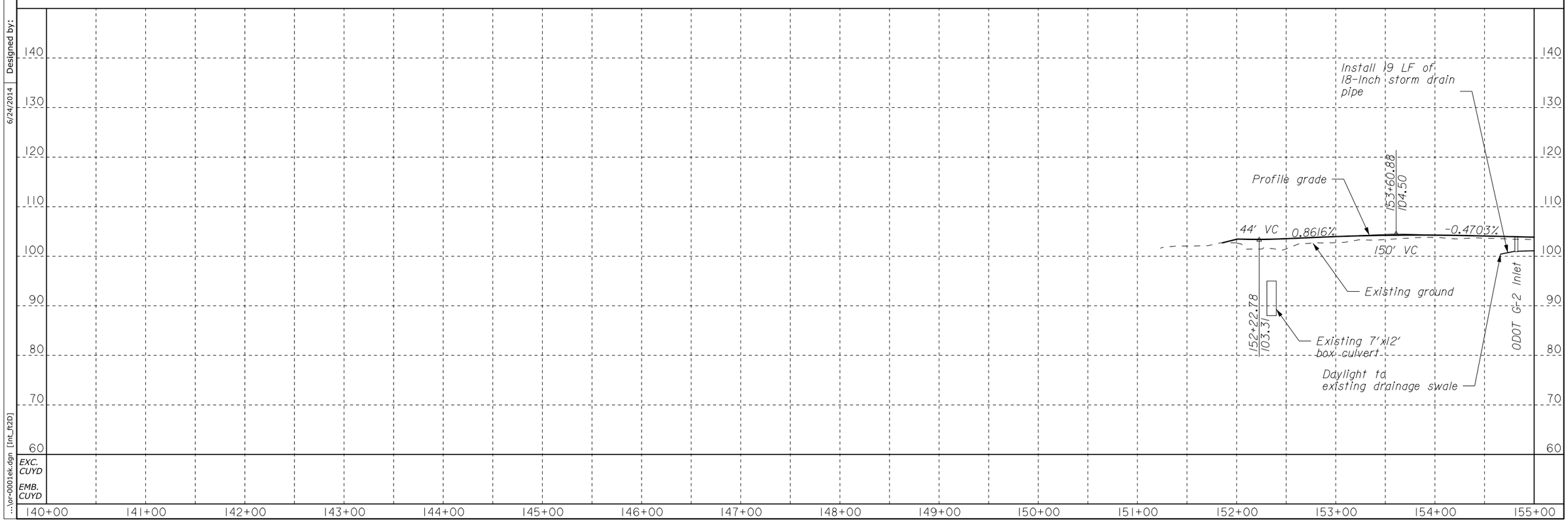

Designed by: G. Hunsaker 06/2014
Checked by: R. Attanasio 06/2014
6/24/2014
...\or-0001ek.dgn [Int_ft2D]

STATE	PROJECT	SHEET NUMBER
OR	PFH 163(19)	F.3

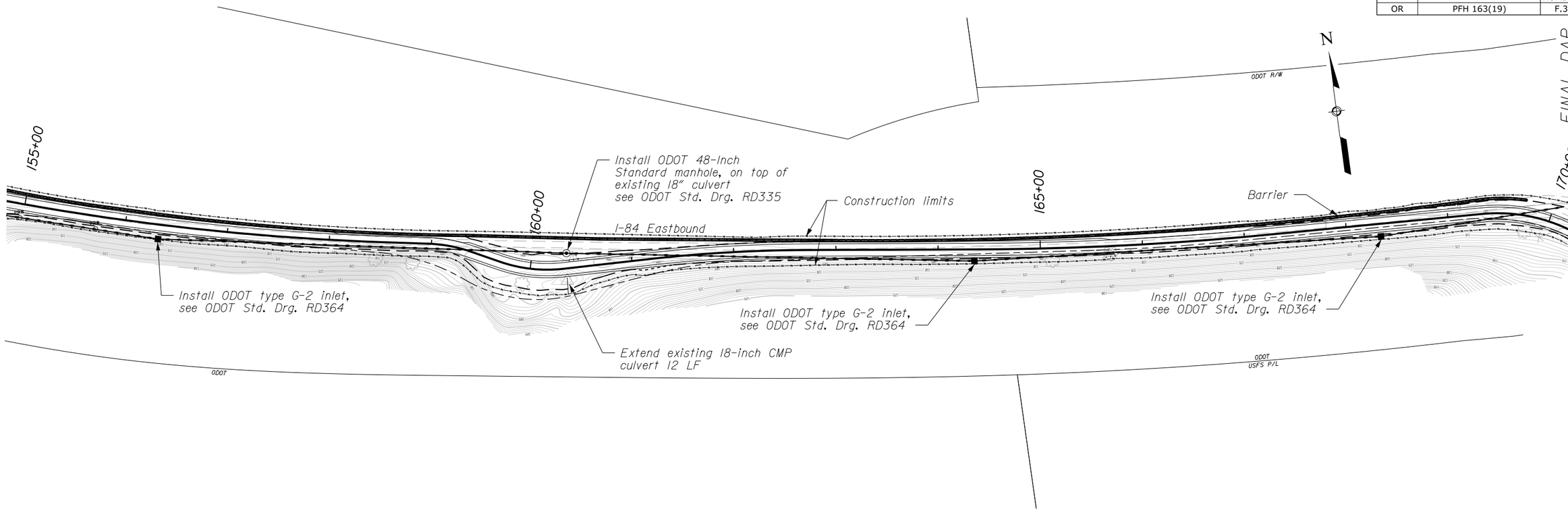

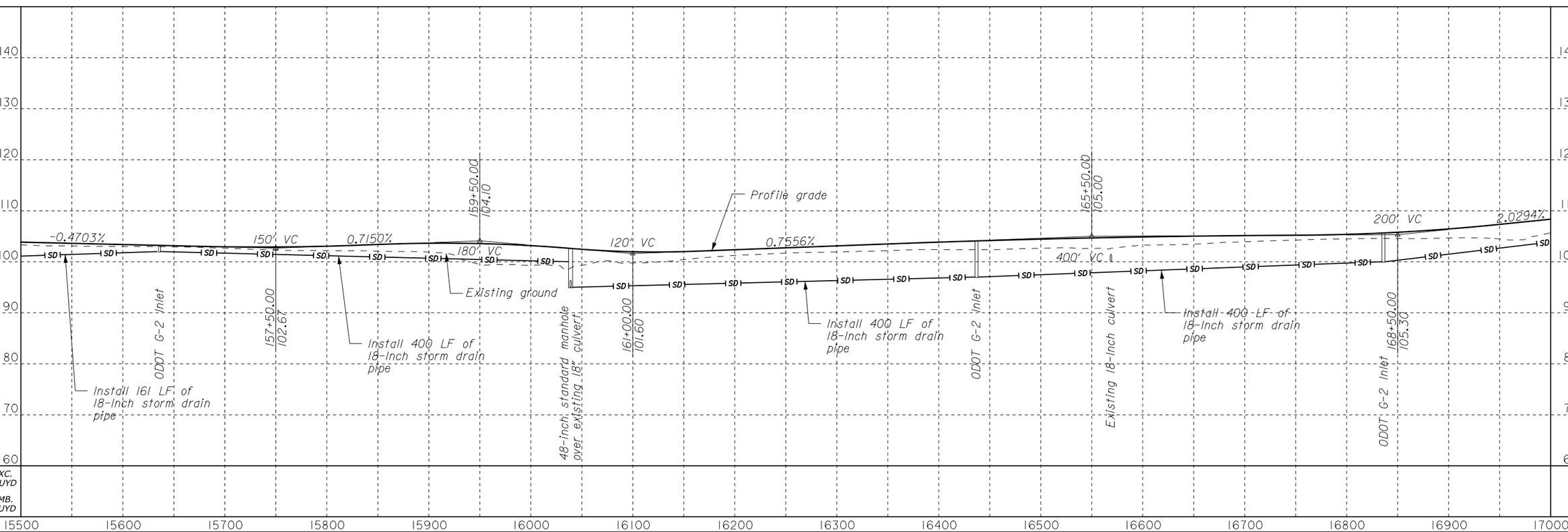

EXC. CUYD	
EMB. CUYD	

Designed by: G. Hunsaker 6/24/2014
Checked by: R. Attanasio 06/2014
06/2014

...\or-0001el.dgn [Int_ft2D]

STATE	PROJECT	SHEET NUMBER
OR	PFH 163(19)	F.4

FINAL DAP

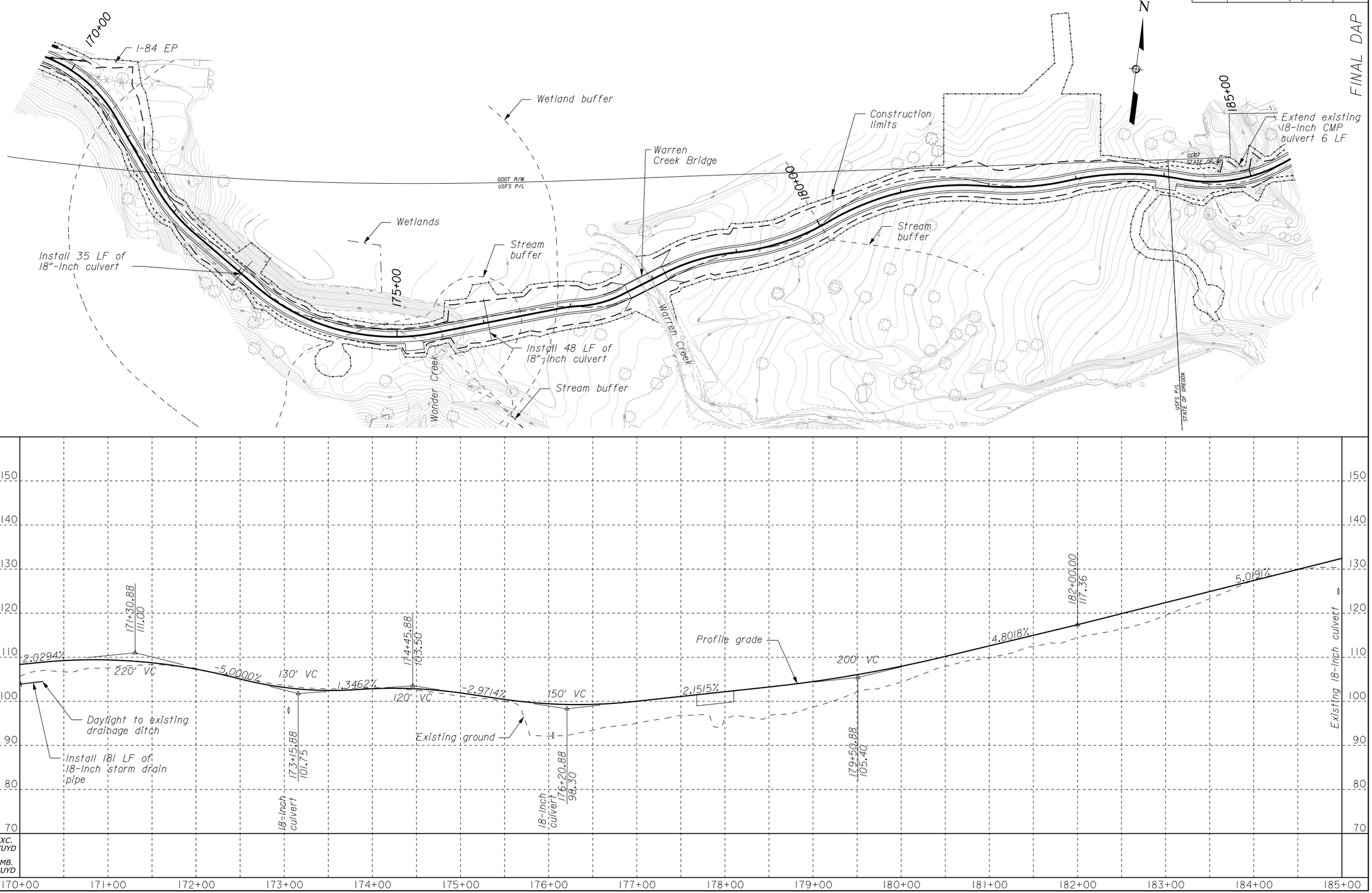

R. Attanasio	06/2014	Designed by:	6/24/2014
G. Hunsaker	06/2014	Checked by:	06/2014

...\or-0001em.dgn [Int_ft2D]

STATE	PROJECT	SHEET NUMBER
OR	PFH 163(19)	F.5

FINAL DAP

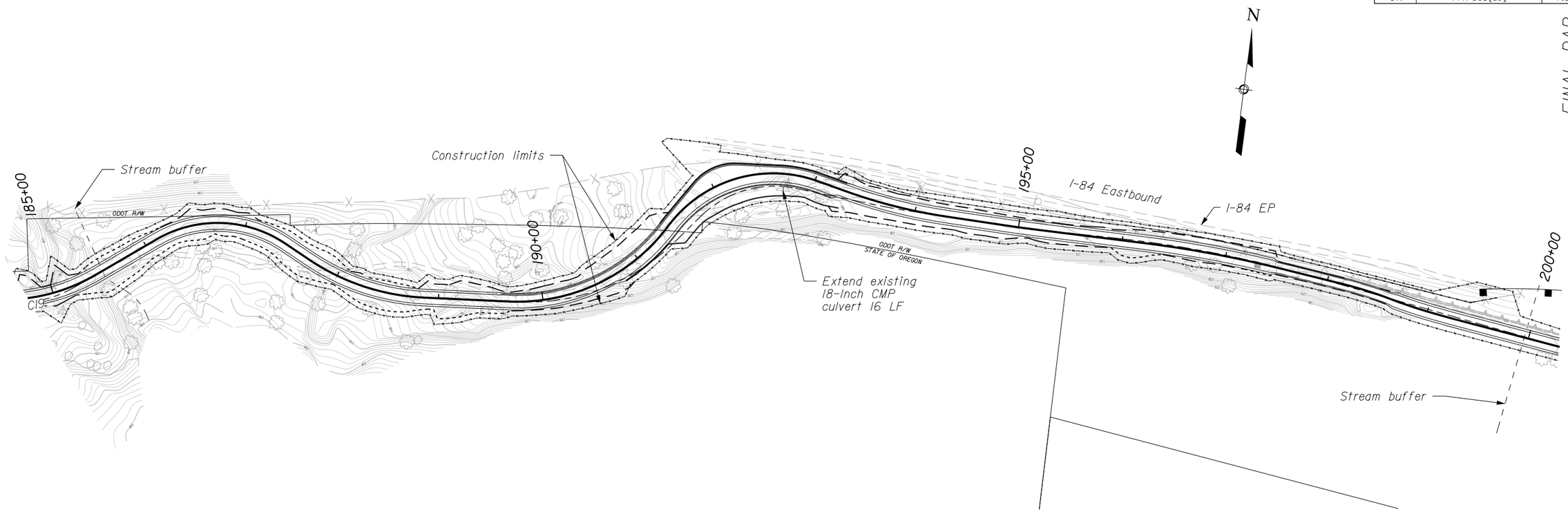

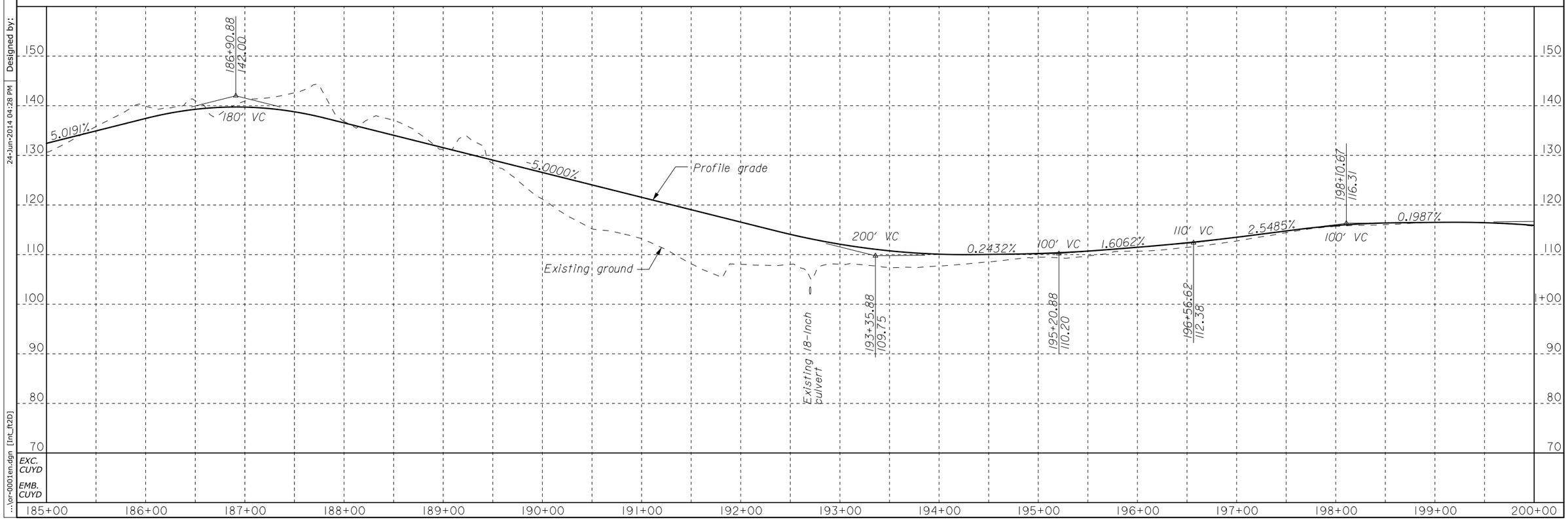

Designed by: G. Hunsaker 06/2014 | Checked by: R. Attanasio 06/2014

24-Jun-2014 04:28 PM ...\or-0001en.dgn [Int_ft2D]

STATE	PROJECT	SHEET NUMBER
OR	PFH 163(19)	F.6

FINAL DAP

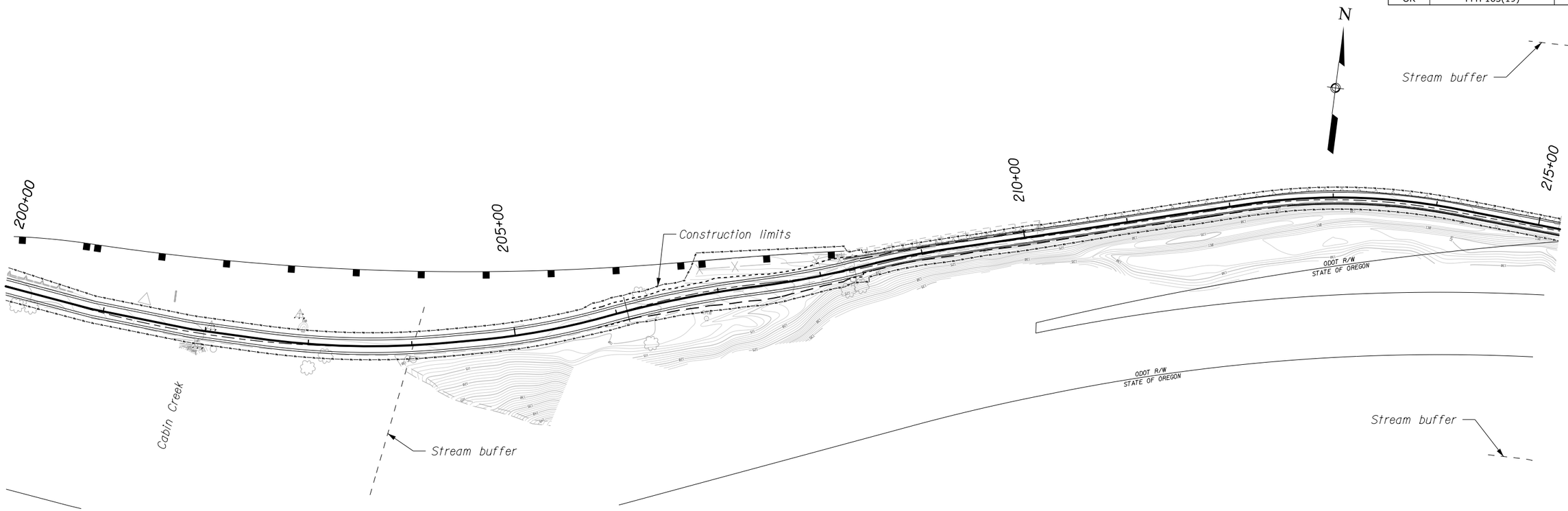

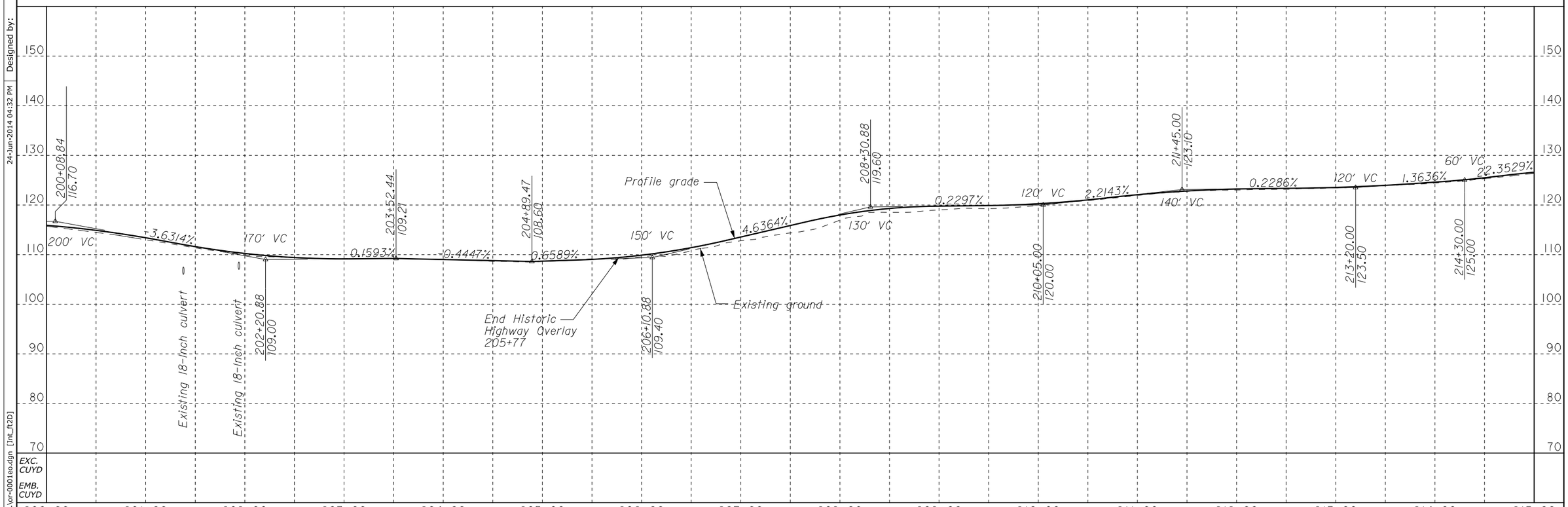

Designed by: G. Hunsaker 06/2014
Checked by: R. Attanasio 06/2014
24-Jun-2014 04:32 PM
...\or-0001eo.dgn [Int_ft2D]

STATE	PROJECT	SHEET NUMBER
OR	PFH 163(19)	F.7

FINAL DAP

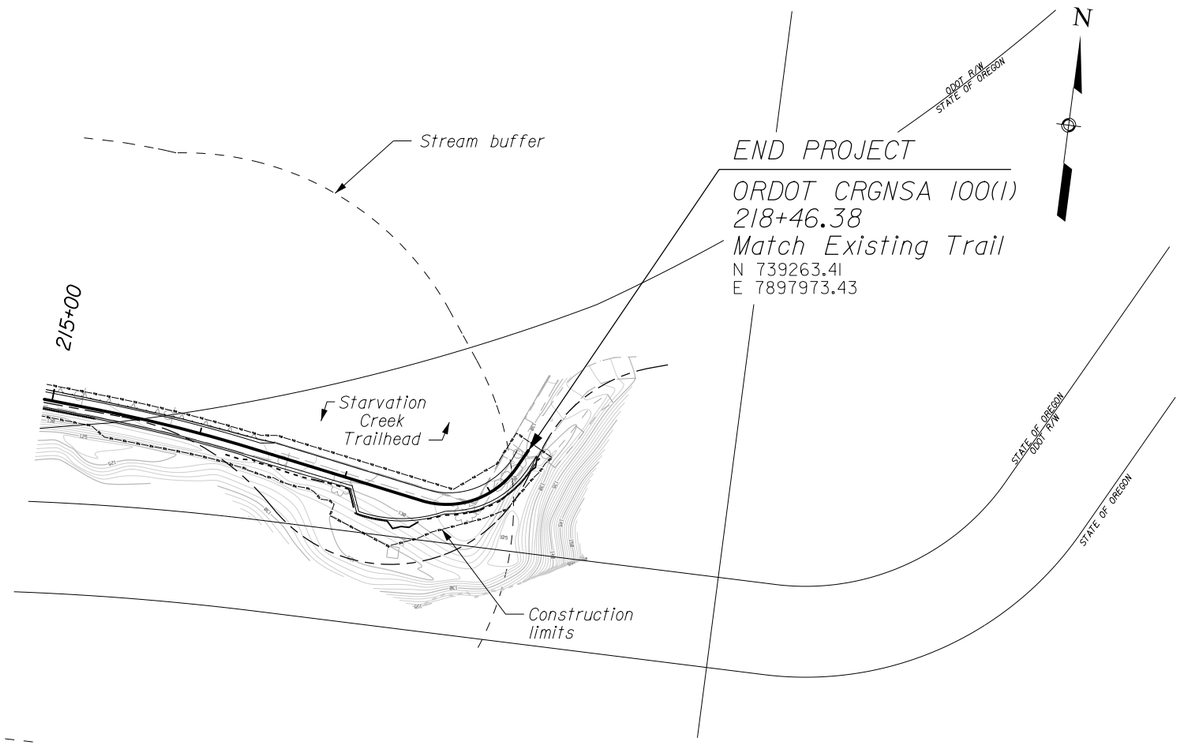

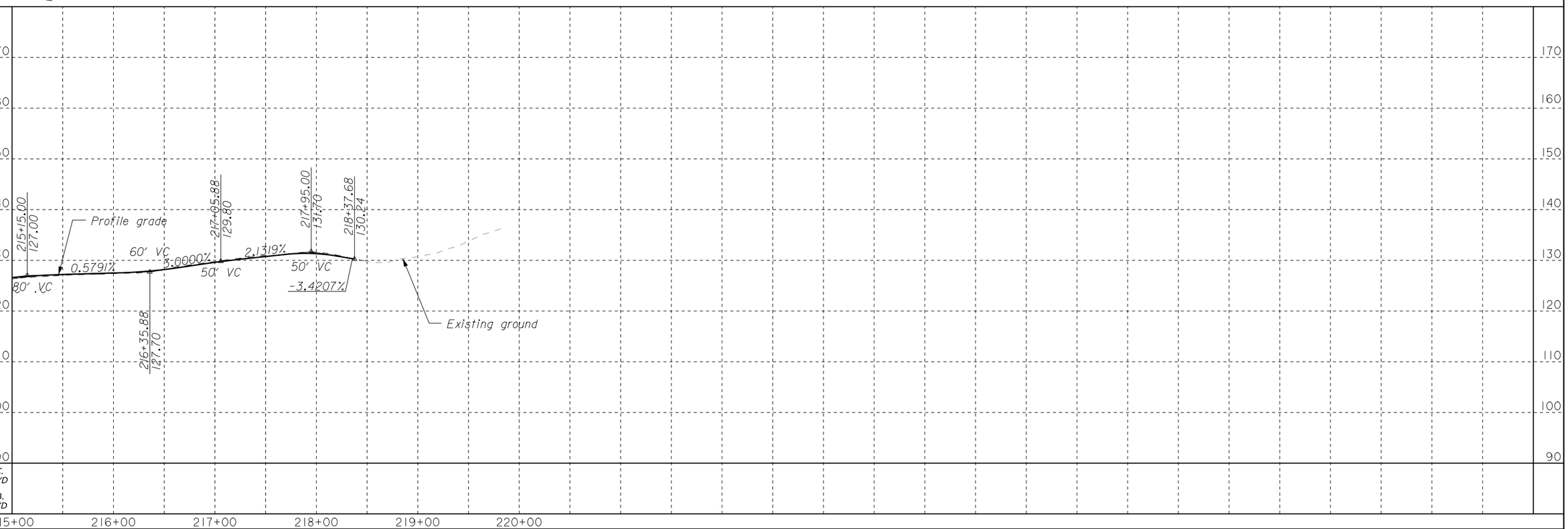

...\or-0001ep.dgn [Int_ft2D] 24-Jun-2014 04:35 PM Designed by: G. Hunsaker 06/2014 Checked by: R. Attanasio 06/2014

FINAL DAP

ITEM XXXXXX CONSTRUCTION SIGNS					
SIGN NO.	MUTCD REF NO.	SIGN LEGEND	SIGN SIZE IN x IN	NUMBER OF SIGNS	AREA SQ FT
1	SPECIAL	YOUR TAX DOLLARS AT WORK	96x48	2	64
2	W20-1	ROAD WORK AHEAD	48x48	2	32
3	R2-6aP	FINES DOUBLE	36x24	2	12
4	W20-1	ROAD WORK AHEAD	36x36	2	18
5	R2-6aP	FINES DOUBLE	24x18	2	6
6	W20-5R	RIGHT LANE CLOSED 1/2 MILE	48x48	2	32
7	W20-5R	RIGHT LANE CLOSED 1/2 MILE	36x36	2	18
8	W4-2R	RIGHT LANE ENDS	48x48	2	32
9	W4-2R	RIGHT LANE ENDS	36x36	2	18
10	E5-2	EXIT OPEN	48x36	1	12
11	G20-2	END ROAD WORK	48x24	2	16

TEMPORARY TRAFFIC CONTROL			
ITEM	DESCRIPTION	UNIT	QUANTITY
63502-1200	Temporary traffic control, plastic drums	Each	88
	Temporary traffic control, temporary concrete barrier	Ln Ft	3700
	Impact Attenuator	Each	2
	Barricade Type III	Each	4

TABULATION OF TEMPORARY TRAFFIC CONTROL QUANTITIES

..\or-0001na.dgn [Int_ft2D] 24-Jun-2014 04:42 PM Designed by: S. Daleo 06/2014 Checked by: J. Bland 06/2014

STATE	PROJECT	SHEET NUMBER
OR	PFH 163(19)	G.2

FINAL DAP

LEGEND:

- Under Traffic
- Work Space
- Plastic Drums, 40' Spacing
- Median Barrier
- Impact Attenuator
- 1 / R2-6aP — Sign Number MUTCD/ODOT Number
- Sign on Temporary Support
- Sequential Arrow Board

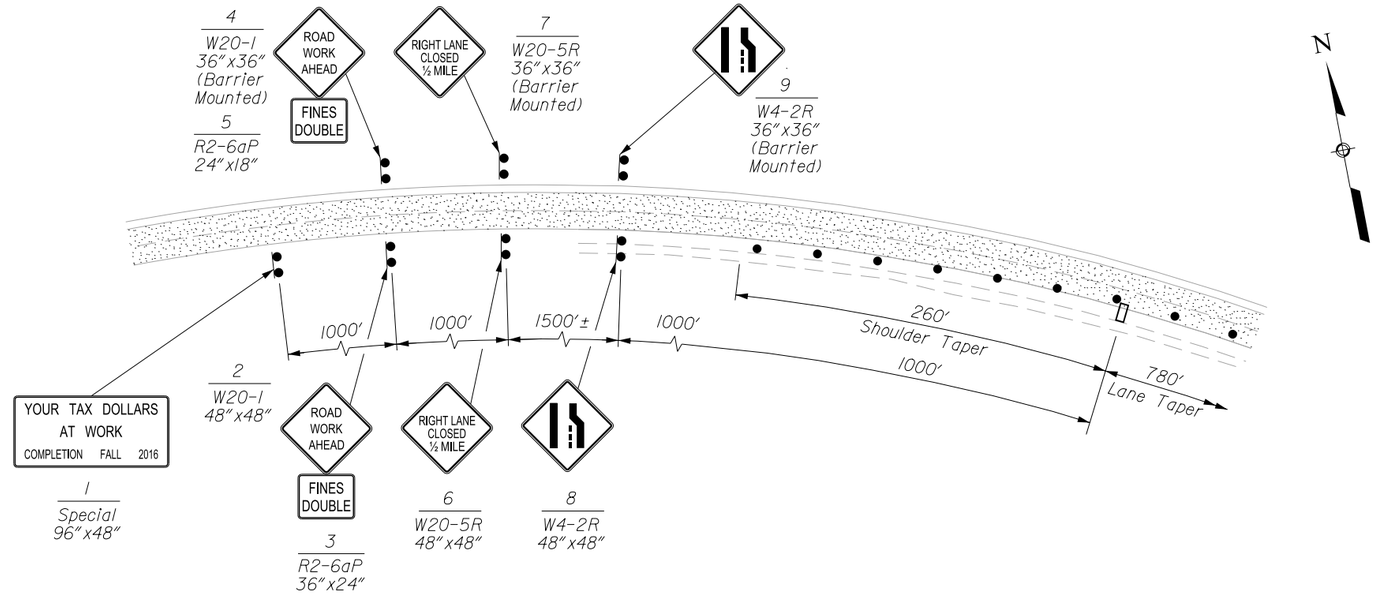

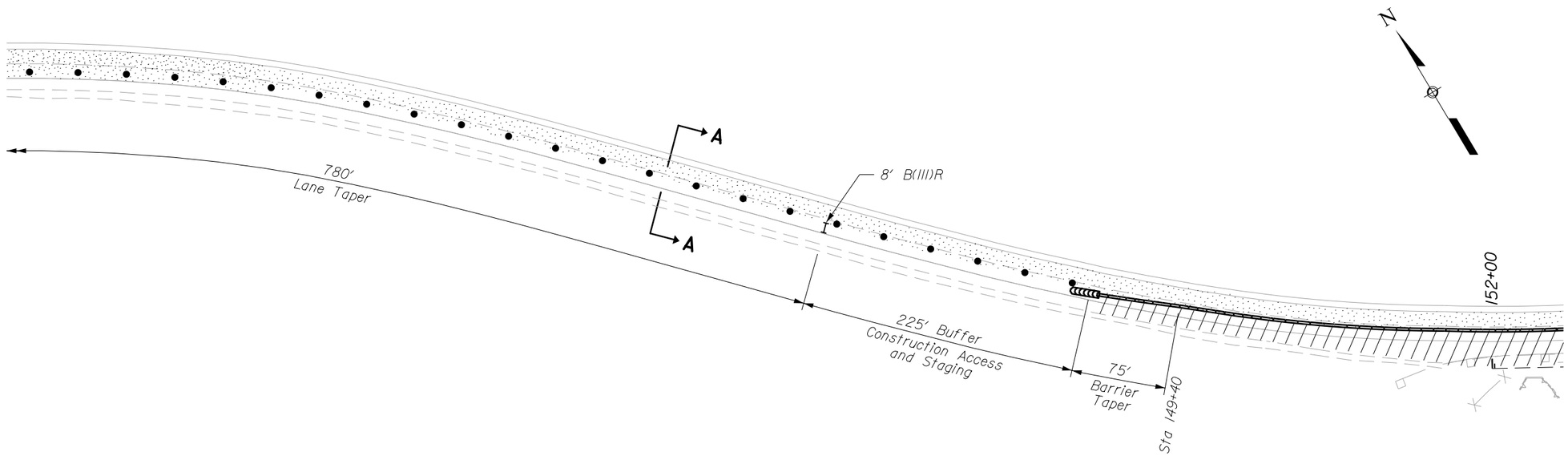

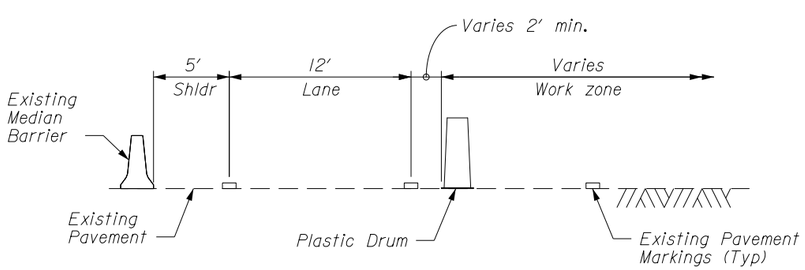

SECTION A-A

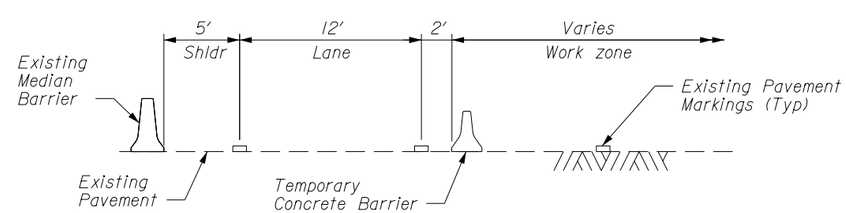

SECTION B-B

Scale in feet
50 25 0 50 100 150

TEMPORARY TRAFFIC CONTROL PLAN SINGLE LANE CLOSURE 1

S. Daleo | 06/2014 | Checked by: | J. Bland | 06/2014 | Designed by: | 6/24/2014

...\or-0001nb.dgn [Int_ft2D]

STATE	PROJECT	SHEET NUMBER
OR	PFH 163(19)	G.3

FINAL DAP

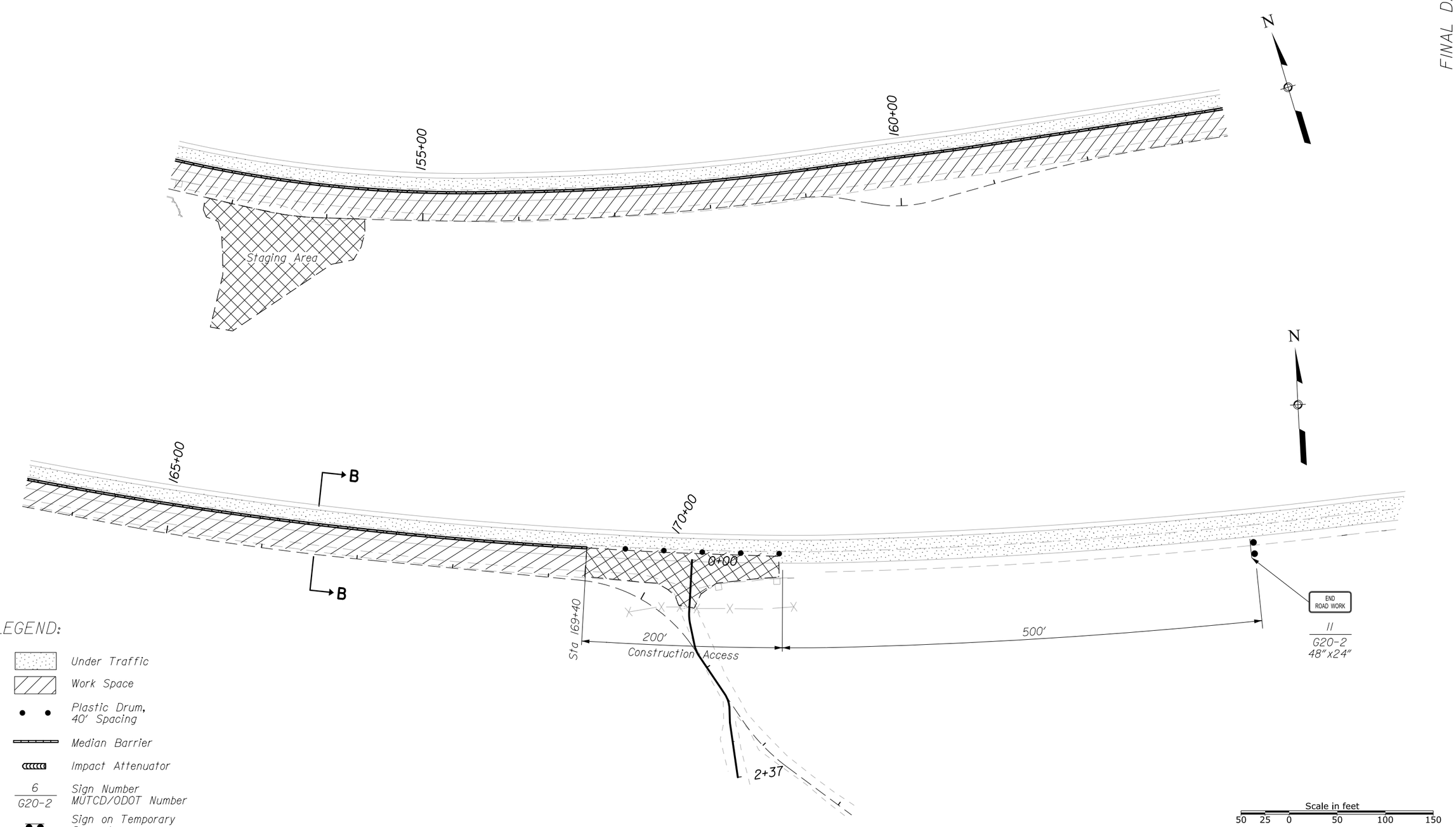

LEGEND:

- Under Traffic
- Work Space
- Plastic Drum, 40' Spacing
- Median Barrier
- Impact Attenuator
- 6 / G20-2 — Sign Number / MUTCD/ODOT Number
- Sign on Temporary Support

NOTE:

For section B-B see sheet G.2

TEMPORARY TRAFFIC CONTROL PLAN SINGLE LANE CLOSURE 1

S. Daleo	06/2014	Checked by: J. Bland	06/2014
Designed by:	6/24/2014		

...\or-0001nc.dgn [Int_ft2D]

STATE	PROJECT	SHEET NUMBER
OR	PFH 163(19)	G.4

FINAL DAP

LEGEND:

- Under Traffic
- Work Space
- Plastic Drum, 40' Spacing
- Median Barrier
- Impact Attenuator
- 1 / R2-6aP — Sign Number MUTCD/ODOT Number
- Sign on Temporary Support
- Sequential Arrow Board

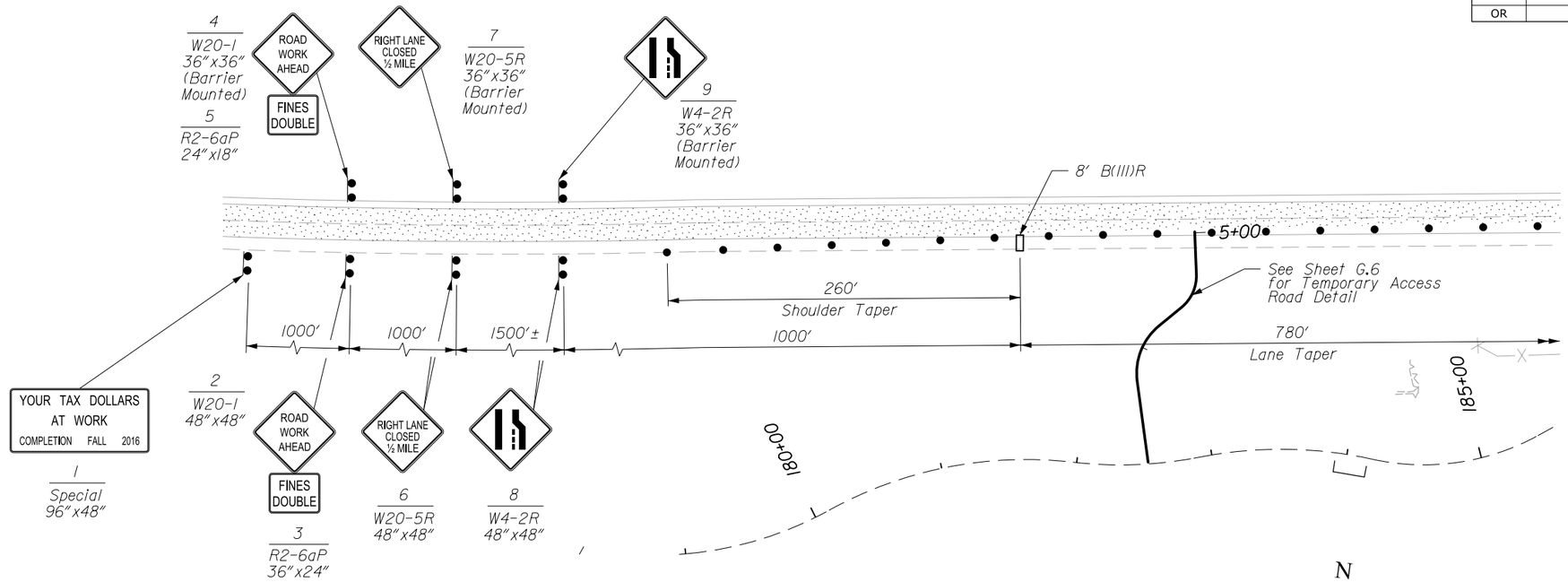

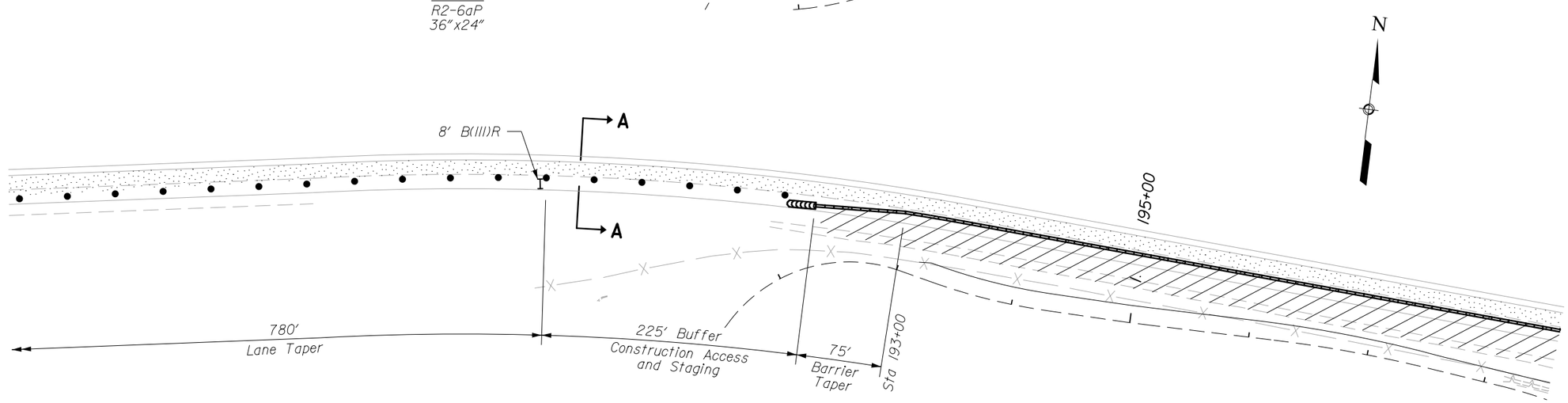

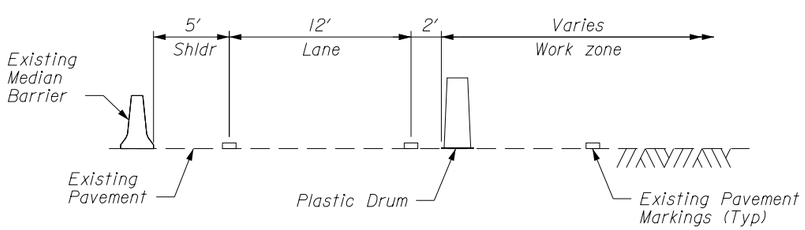

SECTION A-A

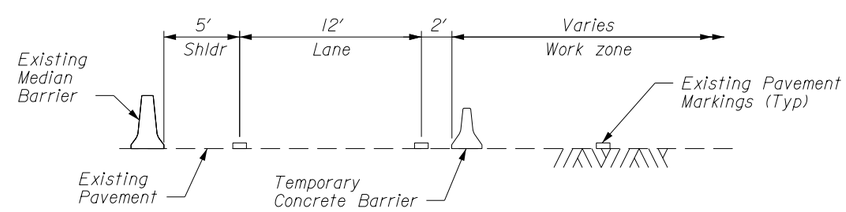

SECTION B-B

Scale in feet
50 25 0 50 100 150

TEMPORARY TRAFFIC CONTROL PLAN SINGLE LANE CLOSURE 2

06/2014 | J. Bland | 06/2014 | Checked by: | S. Daleo | 6/24/2014 | Designed by: | ...\or-0001nd.dgn [Int_ft2D]

STATE	PROJECT	SHEET NUMBER
OR	PFH 163(19)	G.5

FINAL DAP

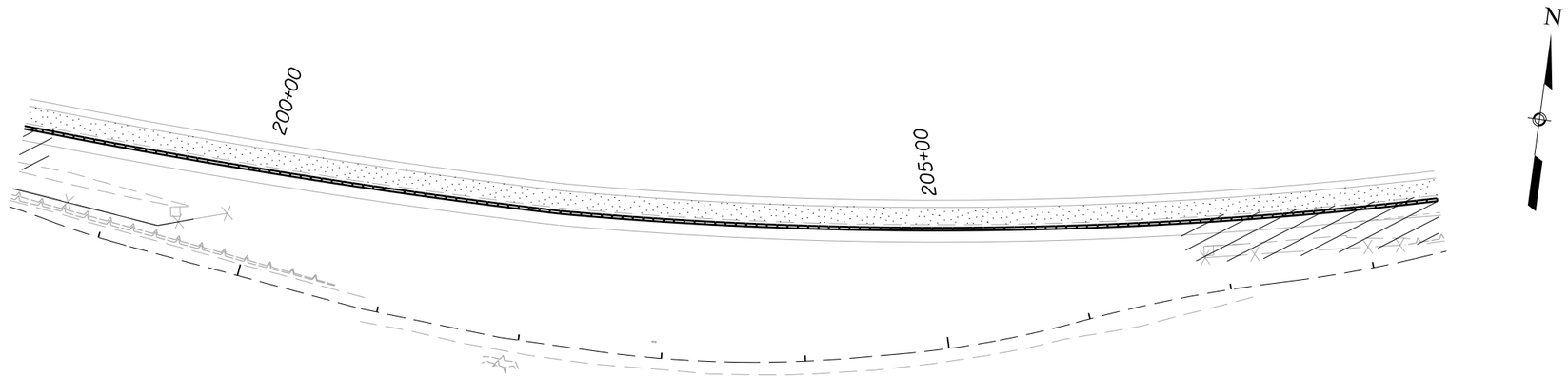

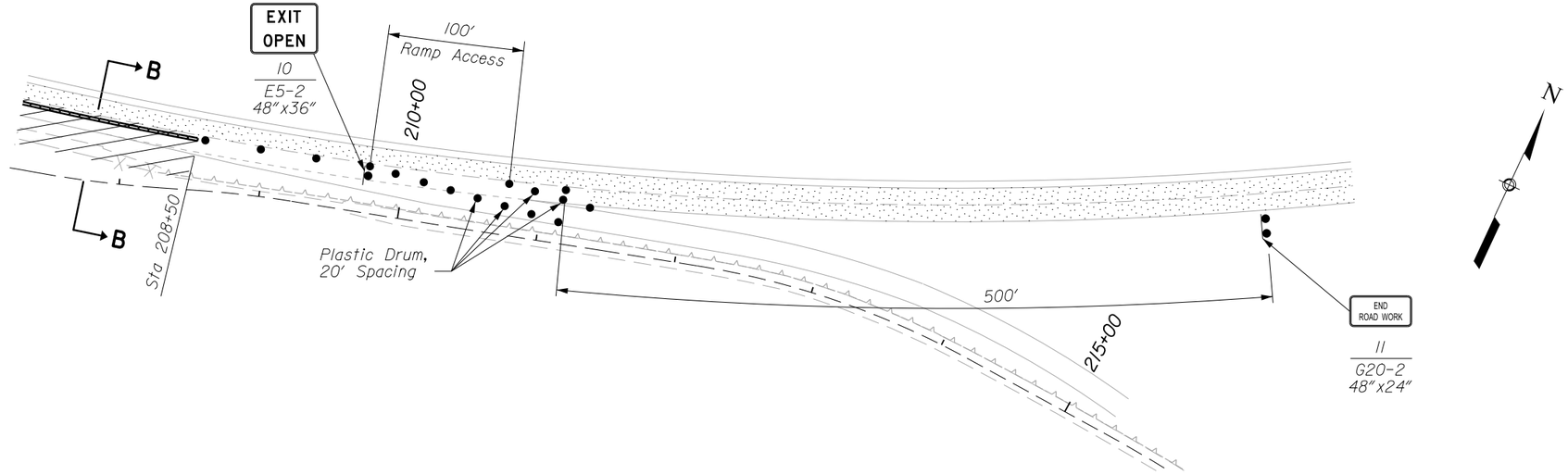

LEGEND:

- Under Traffic
- Work Space
- Plastic Drum, 40' Spacing
- Median Barrier
- Impact Attenuator
- 6 / G20-2 — Sign Number / MUTCD/ODOT Number
- Sign on Temporary Support

NOTE:

For section B-B see sheet G.2

Scale in feet

50 25 0 50 100 150

TEMPORARY TRAFFIC CONTROL PLAN SINGLE LANE CLOSURE 2

S. Daleo 06/2014 | Checked by: J. Bland 06/2014 | Designed by: 6/24/2014

...\or-0001ne.dgn [Int_ft2D]

STATE	PROJECT	SHEET NUMBER
OR	PFH 163(19)	G.6

FINAL DAP

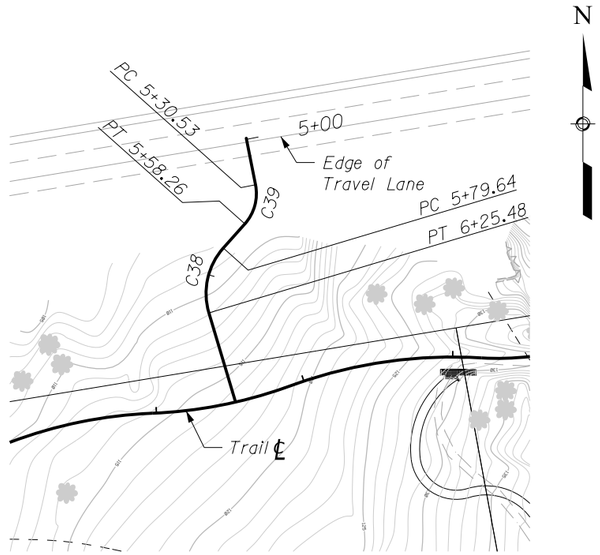

TEMPORARY ACCESS ROAD AT 182+53.05
PLAN

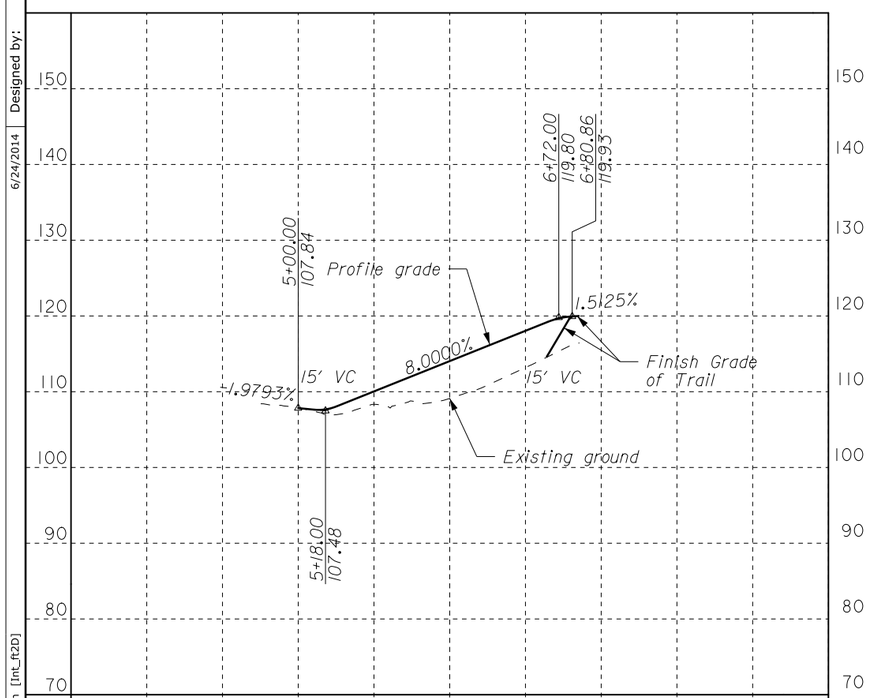

EXC. CUYD
EMB. CUYD

TEMPORARY ACCESS ROAD AT 182+53.05
PROFILE

4+00 5+00 6+00 7+00

Designed by: S. Daleo 06/2014
Checked by: J. Bland 06/2014
6/24/2014
...\or-0001nf.dgn [Int_ft2D]

STATE	PROJECT	SHEET NUMBER
OR	PFH 163(19)	H.1

FINAL DAP

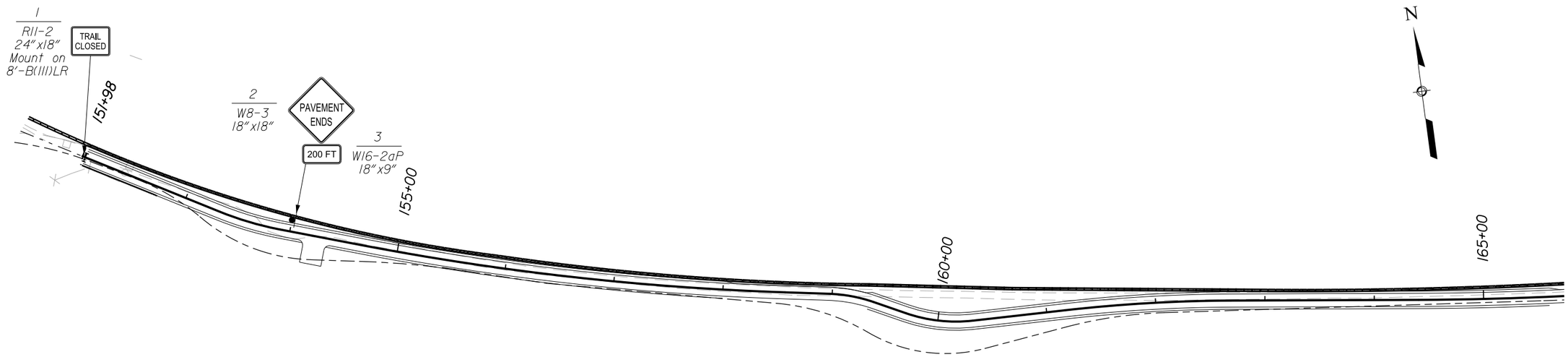

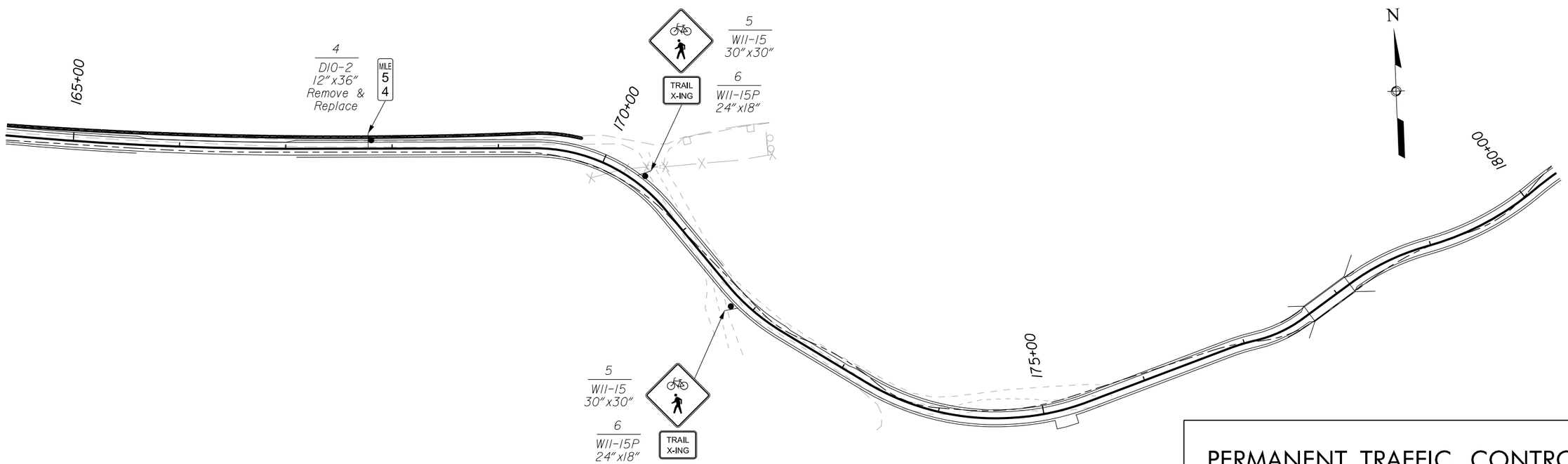

PERMANENT TRAFFIC CONTROL PLAN

Designed by: S. Daleo 06/2014
Checked by: J. Bland 06/2014
24-Jun-2014 04:38 PM
...\or-0001ha.dgn [Int_ft2D]

STATE	PROJECT	SHEET NUMBER
OR	PFH 163(19)	H.2

FINAL DAP

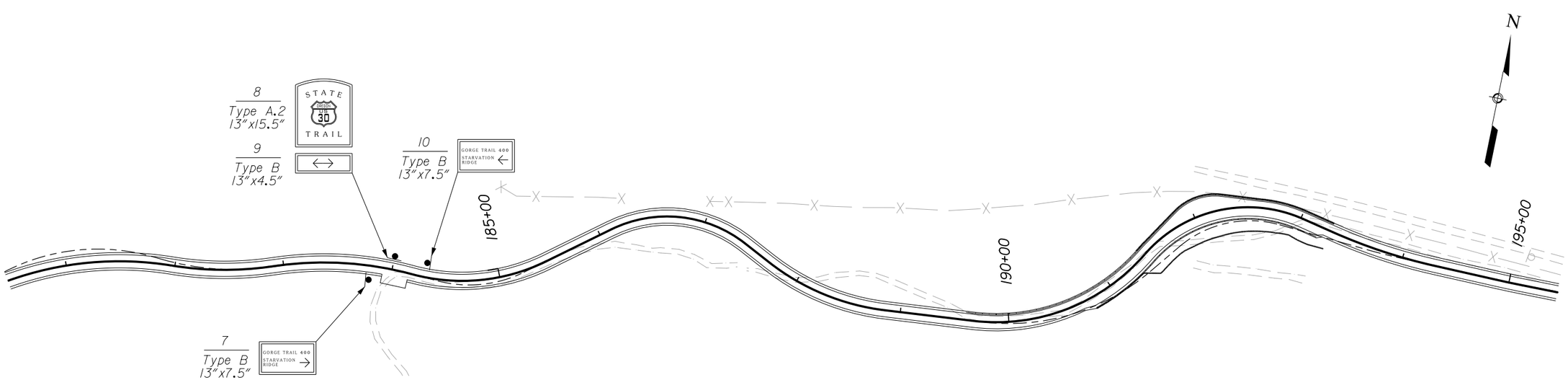

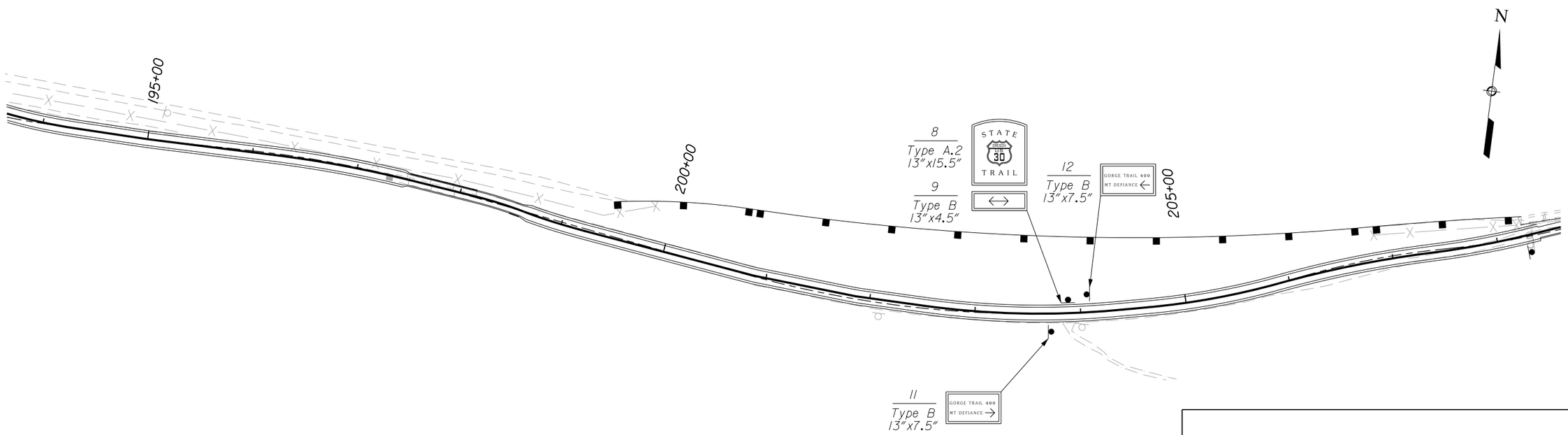

PERMANENT TRAFFIC CONTROL PLAN

Designed by: S. Daleo 06/2014
Checked by: J. Bland 06/2014
24-Jun-2014 04:40 PM
...\or-0001hb.dgn [int_ft2D]

STATE	PROJECT	SHEET NUMBER
OR	PFH 163(19)	H.3

FINAL DAP

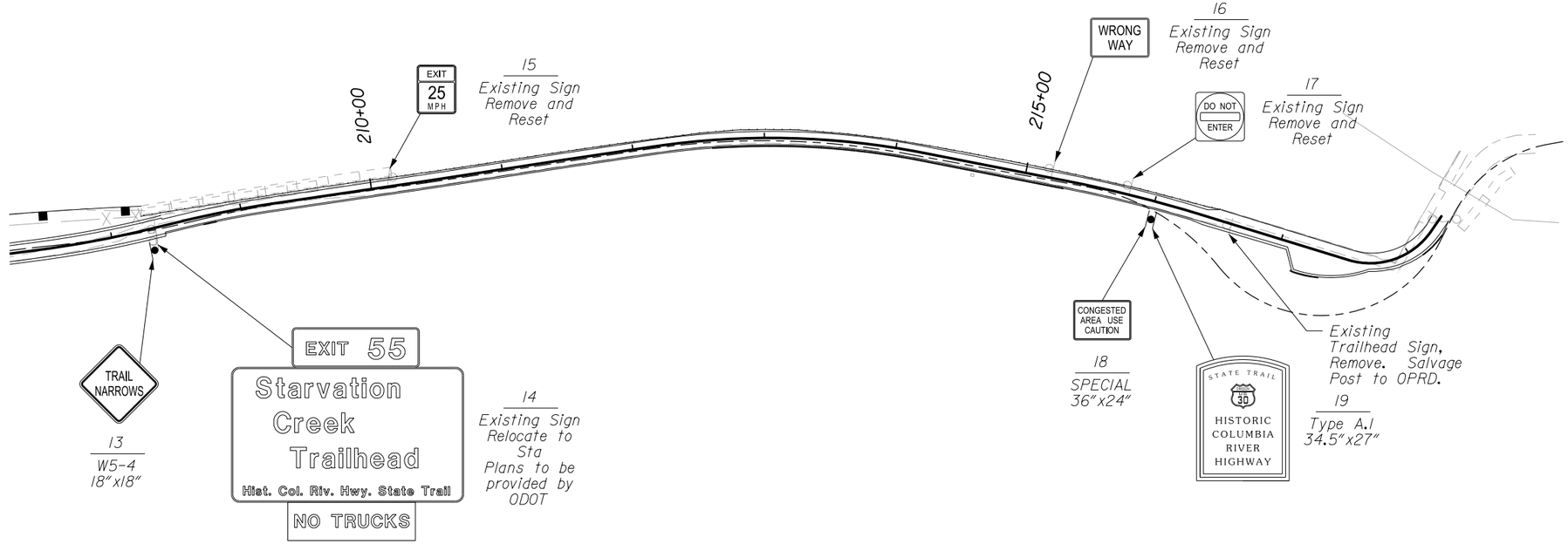

PERMANENT TRAFFIC CONTROL PLAN

...\or-0001hc.dgn [Int_ft2D] | 6/24/2014 | Designed by: S. Daleo | 06/2014 | Checked by: J. Bland | 06/2014

STATE	PROJECT	SHEET NUMBER
OR	DOT CRGNSA 100(1)	I.1

FINAL DAP

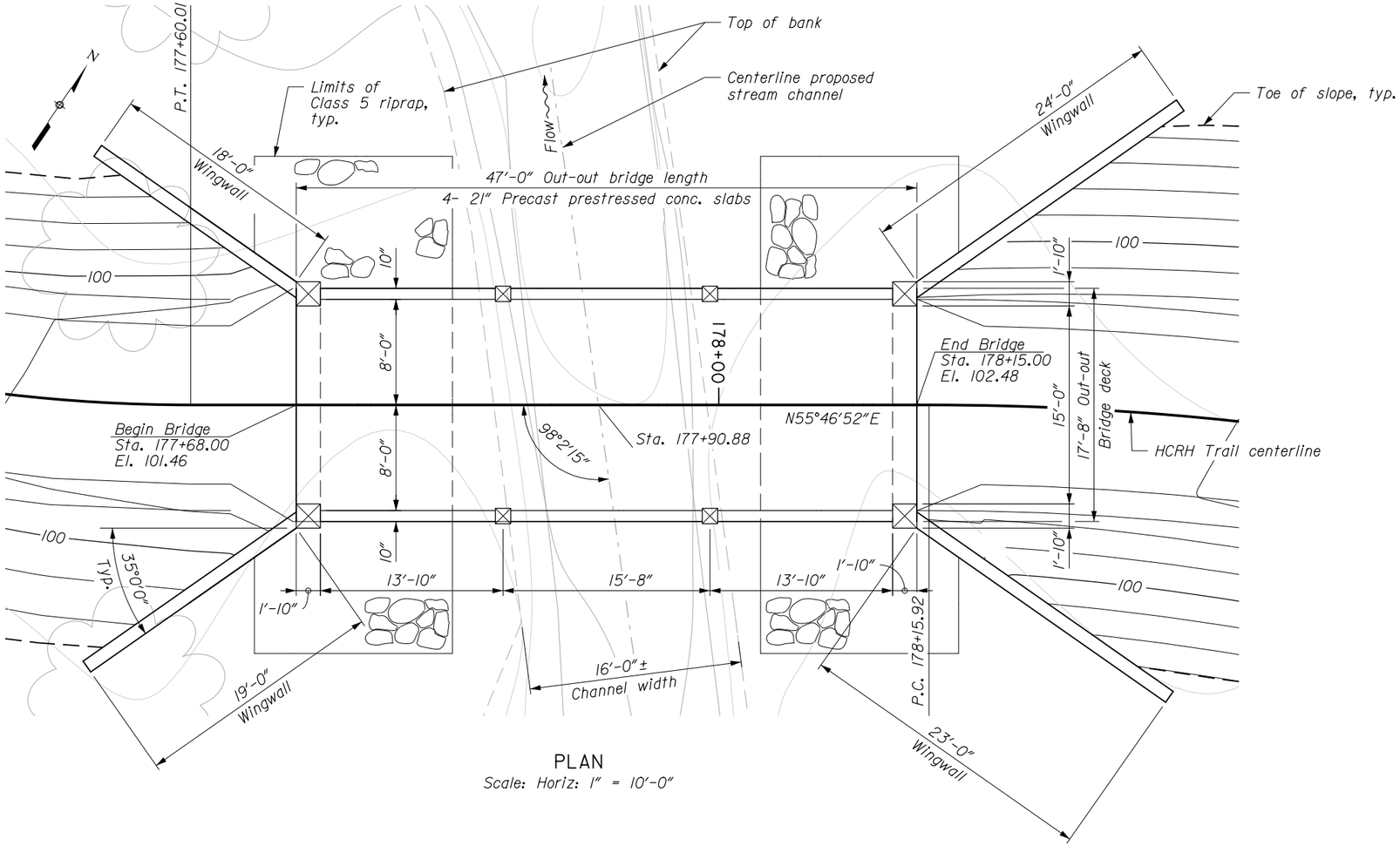

PLAN

Scale: Horiz: 1" = 10'-0"

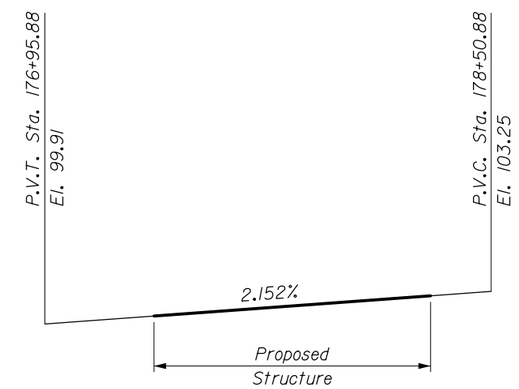

GRADELINE DIAGRAM

No Scale

U.S. DEPARTMENT OF TRANSPORTATION
FEDERAL HIGHWAY ADMINISTRATION
WESTERN FEDERAL LANDS HIGHWAY DIVISION

HISTORIC COLUMBIA RIVER HIGHWAY TRAIL

OREGON

WARREN CREEK BRIDGE

PLAN AND ELEVATION

NO.	DATE	BY	REVISIONS	NO.	DATE	BY	REVISIONS	DESIGNED BY	DRAWN BY	CHECKED BY	SCALE	PROJECT TEAM LEADER	BRIDGE DRAWING	DATE	DRAWING NO.
								D WAGNER	D MONK	D TAKASUMI	1"=10'-0"		of	JUNE 2014	I.1

24-Jun-2014 05:47 PM

...\OR100lia.dgn [Int_t120]

STATE	PROJECT	SHEET NUMBER
OR	DOT CRGNSA 100(1)	I.2

DRAFT DAP

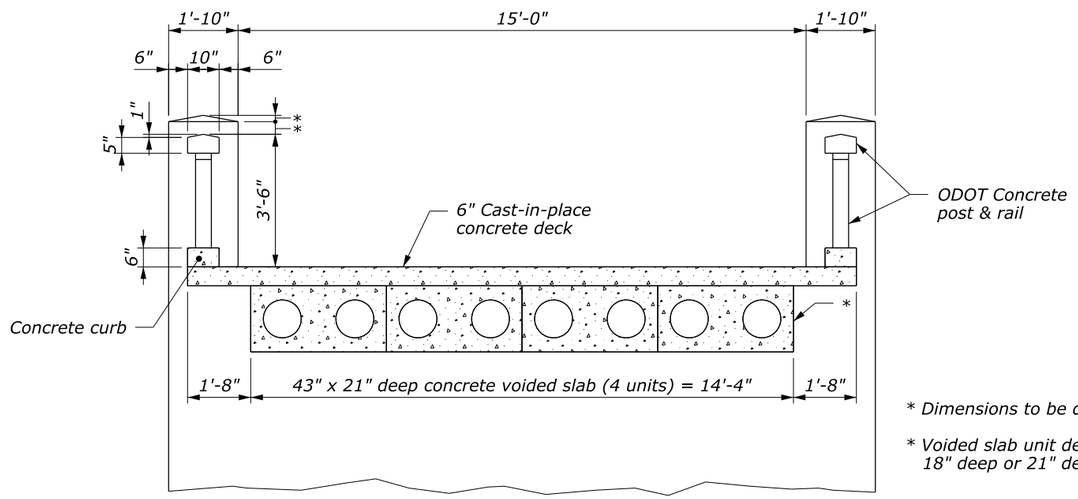

ABUTMENT ELEVATION VIEW

Scale: ¼" = 1'-0"

* Dimensions to be determined

* Voided slab unit depth could be 18" deep or 21" deep

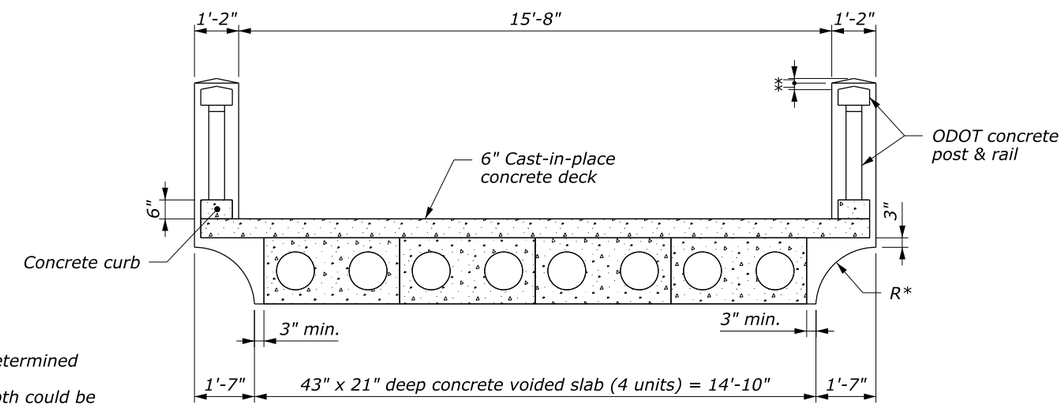

BRIDGE CROSS SECTION

Scale: ¼" = 1'-0"

HISTORIC COLUMBIA RIVER HIGHWAY WARREN CREEK BRIDGE

26 July 2013 11:23 AM c:\myfiles\pw_production\d0179135\Abut_Elev_Cross_Sect.dgn [Int_ft2D]

Designed by: --/---- Checked by: --/----

STATE	PROJECT	SHEET NUMBER
OR	DOT CRGNSA 100(1)	J.1

FINAL DAP

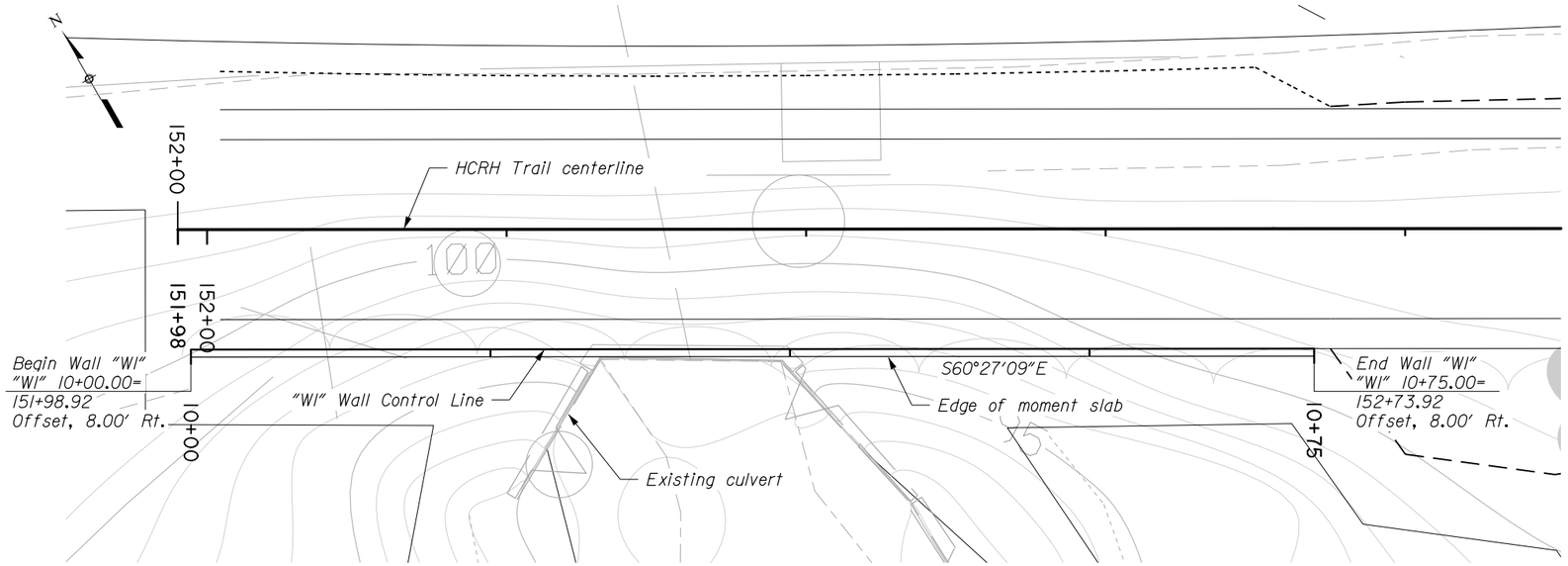

PLAN
Scale: Horiz: 1" = 10'-0"

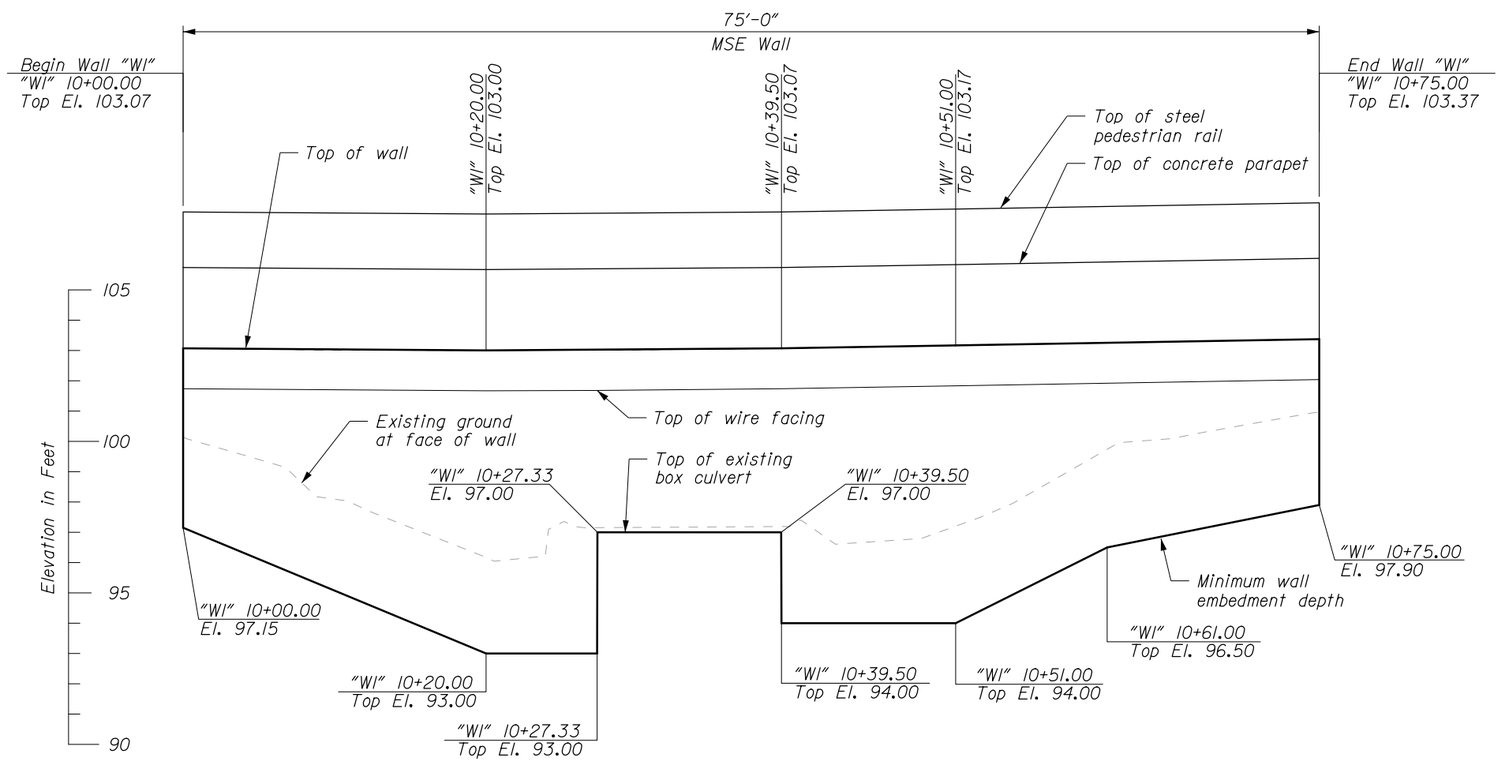

ELEVATION
Scale: Horiz: 1" = 10'-0"
Vert: 1" = 5'-0"

Notes:
1. Top of wall elevations and locations are set as shown on plans and applicable details. Bottom of wall positioning may be adjusted in order to meet top of wall criteria, minimum wall embedment criteria, and wall manufacturer's design.
2. For Typical Section, see Dwg. No. J.8.

U.S. DEPARTMENT OF TRANSPORTATION
FEDERAL HIGHWAY ADMINISTRATION
WESTERN FEDERAL LANDS HIGHWAY DIVISION

HISTORIC COLUMBIA RIVER HIGHWAY TRAIL

OREGON

WALL W1

PLAN AND ELEVATION

NO.	DATE	BY	REVISIONS	NO.	DATE	BY	REVISIONS	DESIGNED BY	DRAWN BY	CHECKED BY	SCALE	PROJECT TEAM LEADER	BRIDGE DRAWING	DATE	DRAWING NO.
								D WAGNER	D MONK	D TAKASUMI	1"=10'-0"		of	APRIL 2014	J.1

24-Jun-2014 11:01 AM

...ø0R100ija.dgn [Int_ft2D]

STATE	PROJECT	SHEET NUMBER
OR	DOT CRGNSA 100(1)	J.2

FINAL DAP

WALLS 2A & 2B DELETED

U.S. DEPARTMENT OF TRANSPORTATION
FEDERAL HIGHWAY ADMINISTRATION
WESTERN FEDERAL LANDS HIGHWAY DIVISION

HISTORIC COLUMBIA RIVER HIGHWAY TRAIL

OREGON

WALL W2A & W2B

PLAN AND ELEVATION

NO.	DATE	BY	REVISIONS	NO.	DATE	BY	REVISIONS	DESIGNED BY	DRAWN BY	CHECKED BY	SCALE	PROJECT TEAM LEADER	BRIDGE DRAWING	DATE	DRAWING NO.
								D WAGNER	D MONK	D TAKASUMI	1"=10'-0"		of	APRIL 2014	J.2

23-Jun-2014 08:57 AM

...#OR100jb.dgn [int_f2D]

STATE	PROJECT	SHEET NUMBER
OR	DOT CRGNSA 100(1)	J.3

FINAL DAP

WALLS 3A & 3B DELETED

U.S. DEPARTMENT OF TRANSPORTATION
FEDERAL HIGHWAY ADMINISTRATION
WESTERN FEDERAL LANDS HIGHWAY DIVISION

HISTORIC COLUMBIA RIVER HIGHWAY TRAIL

OREGON

WALL W3A & W3B

PLAN AND ELEVATION

NO.	DATE	BY	REVISIONS	NO.	DATE	BY	REVISIONS	DESIGNED BY	DRAWN BY	CHECKED BY	SCALE	PROJECT TEAM LEADER	BRIDGE DRAWING	DATE	DRAWING NO.
								D WAGNER	D MONK	D TAKASUMI	1"=10'-0"		of	APRIL 2014	J.3

23-Jun-2014 09:00 AM

...#OR100jc.dgn [Int_f2D]

STATE	PROJECT	SHEET NUMBER
OR	DOT CRGNSA 100(1)	J.4

FINAL DAP

Curve 1
Δc=04°22'36"(Lt.)
D=57°17'45"
T=3.82'
L=7.64'
R=100.00'

Curve 2
Δc=09°10'02"(Lt.)
D=57°17'45"
T=8.02'
L=16.00'
R=100.00'

Curve 3
Δc=05°25'29"(Lt.)
D=57°17'45"
T=4.74'
L=9.47'
R=100.00'

Curve 4
Δc=02°09'47"(Lt.)
D=57°17'45"
T=1.89'
L=3.78'
R=100.00'

PLAN
Scale: Horiz: 1" = 10'-0"

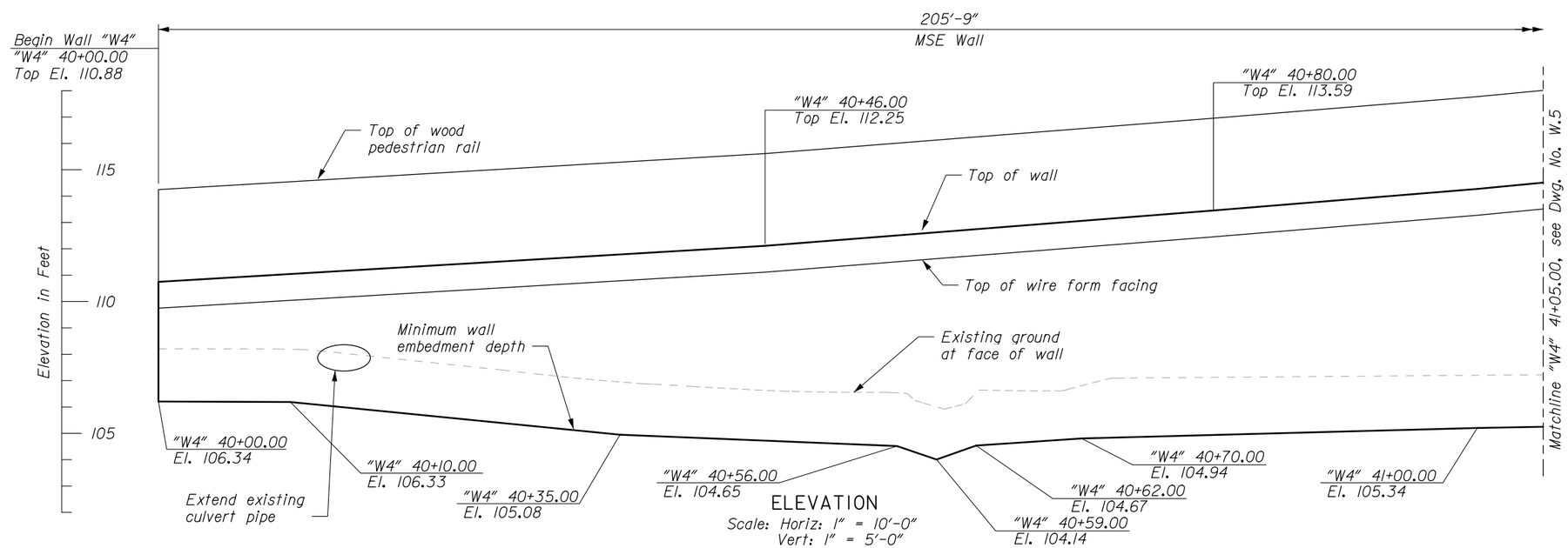

ELEVATION
Scale: Horiz: 1" = 10'-0"
Vert: 1" = 5'-0"

Notes:
1. Top of wall elevations and locations are set as shown on plans and applicable details. Bottom of wall positioning may be adjusted in order to meet top of wall criteria, minimum wall embedment criteria, and wall manufacturer's design.
2. For Typical Section, see Dwg. No. J.9 & J.10.

U.S. DEPARTMENT OF TRANSPORTATION
FEDERAL HIGHWAY ADMINISTRATION
WESTERN FEDERAL LANDS HIGHWAY DIVISION

HISTORIC COLUMBIA RIVER HIGHWAY TRAIL

OREGON

WALL W4

PLAN AND ELEVATION 1

NO.	DATE	BY	REVISIONS	NO.	DATE	BY	REVISIONS	DESIGNED BY	DRAWN BY	CHECKED BY	SCALE	PROJECT TEAM LEADER	BRIDGE DRAWING	DATE	DRAWING NO.
								D WAGNER	D MONK	D TAKASUMI	1"=10'-0"		of	APRIL 2014	J.4

24-Jun-2014 10:30 AM
...ø0R100ljdl.dgn [Int_ft2D]

STATE	PROJECT	SHEET NUMBER
OR	DOT CRGNSA 100(1)	J.5

FINAL DAP

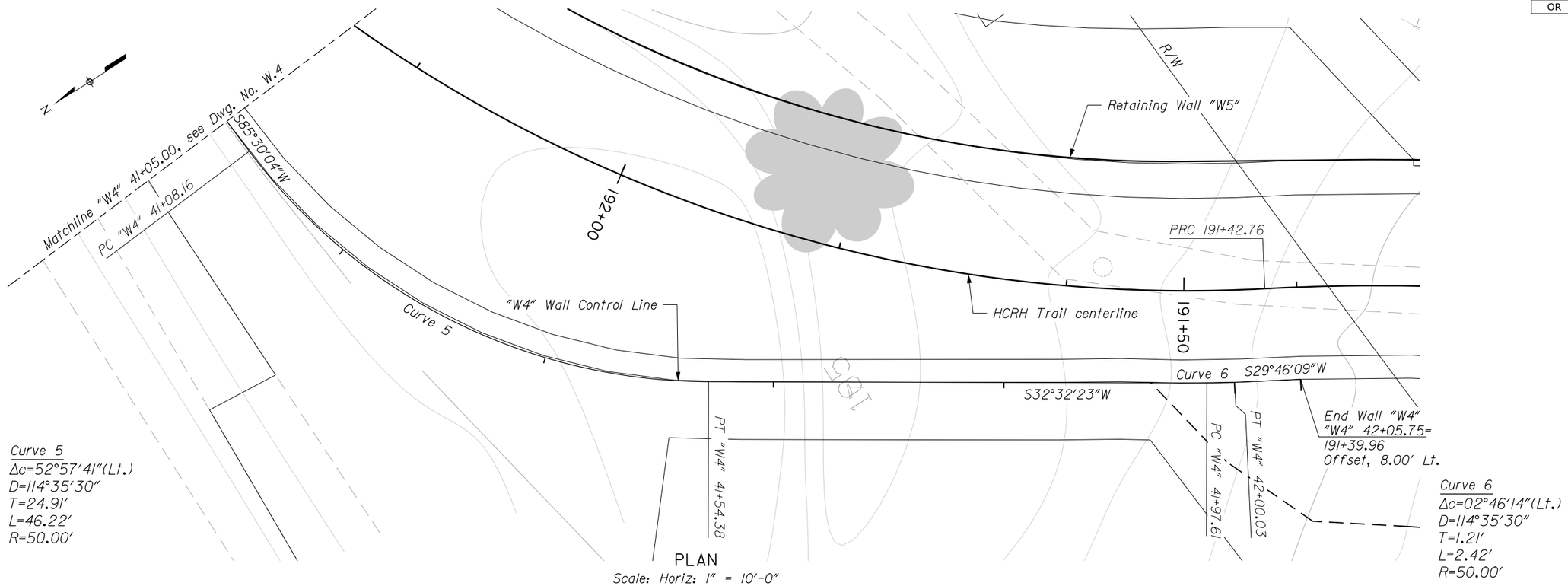

PLAN

Scale: Horiz: 1" = 10'-0"

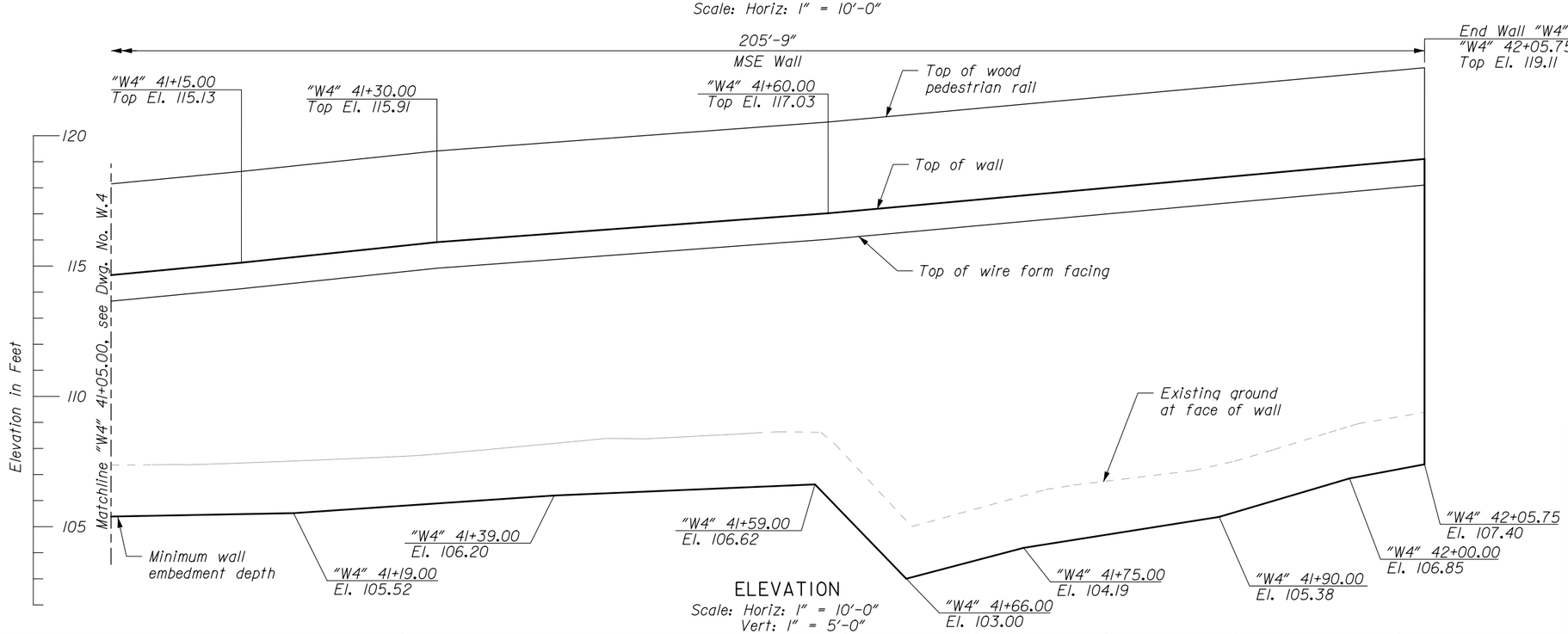

ELEVATION

Scale: Horiz: 1" = 10'-0"
Vert: 1" = 5'-0"

U.S. DEPARTMENT OF TRANSPORTATION
FEDERAL HIGHWAY ADMINISTRATION
WESTERN FEDERAL LANDS HIGHWAY DIVISION

HISTORIC COLUMBIA RIVER HIGHWAY TRAIL

OREGON

WALL W4

PLAN AND ELEVATION 2

NO.	DATE	BY	REVISIONS	NO.	DATE	BY	REVISIONS	DESIGNED BY	DRAWN BY	CHECKED BY	SCALE	PROJECT TEAM LEADER	BRIDGE DRAWING	DATE	DRAWING NO.
								D WAGNER	D MONK	D TAKASUMI	1"=10'-0"		of	APRIL 2014	J.5

24-Jun-2014 03:05 PM

...\OR100jd2.dgn [Int_ft20]

STATE	PROJECT	SHEET NUMBER
OR	DOT CRGNSA 100(1)	J.6

FINAL DAP

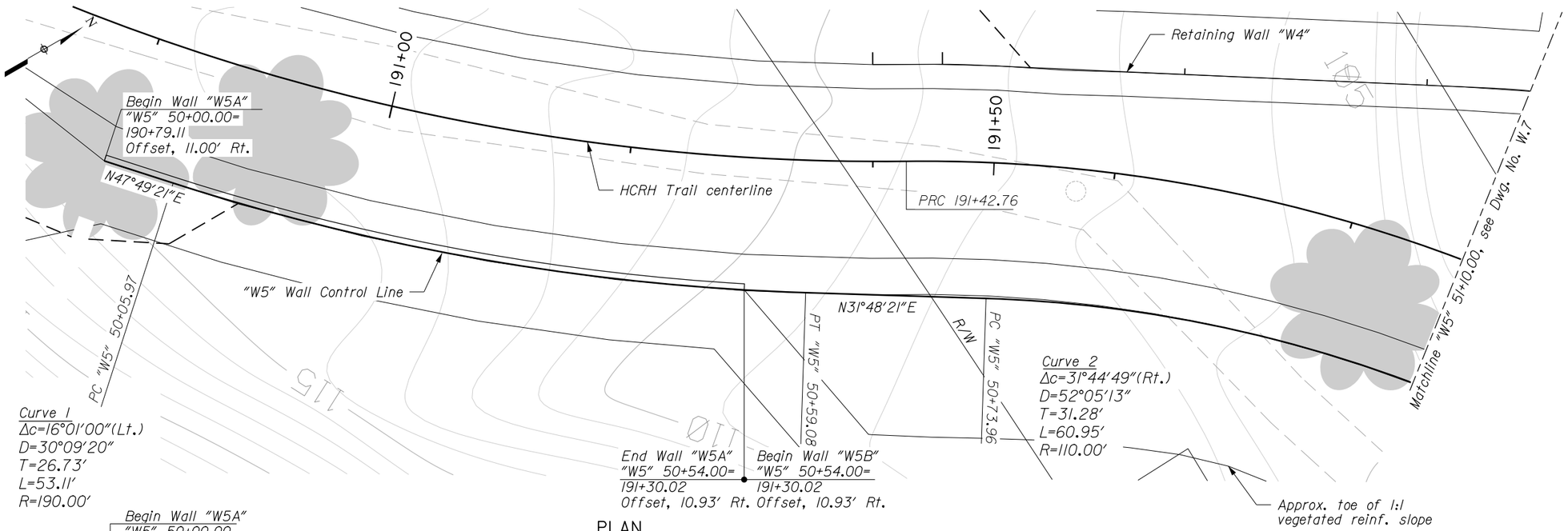

PLAN
Scale: Horiz: 1" = 10'-0"

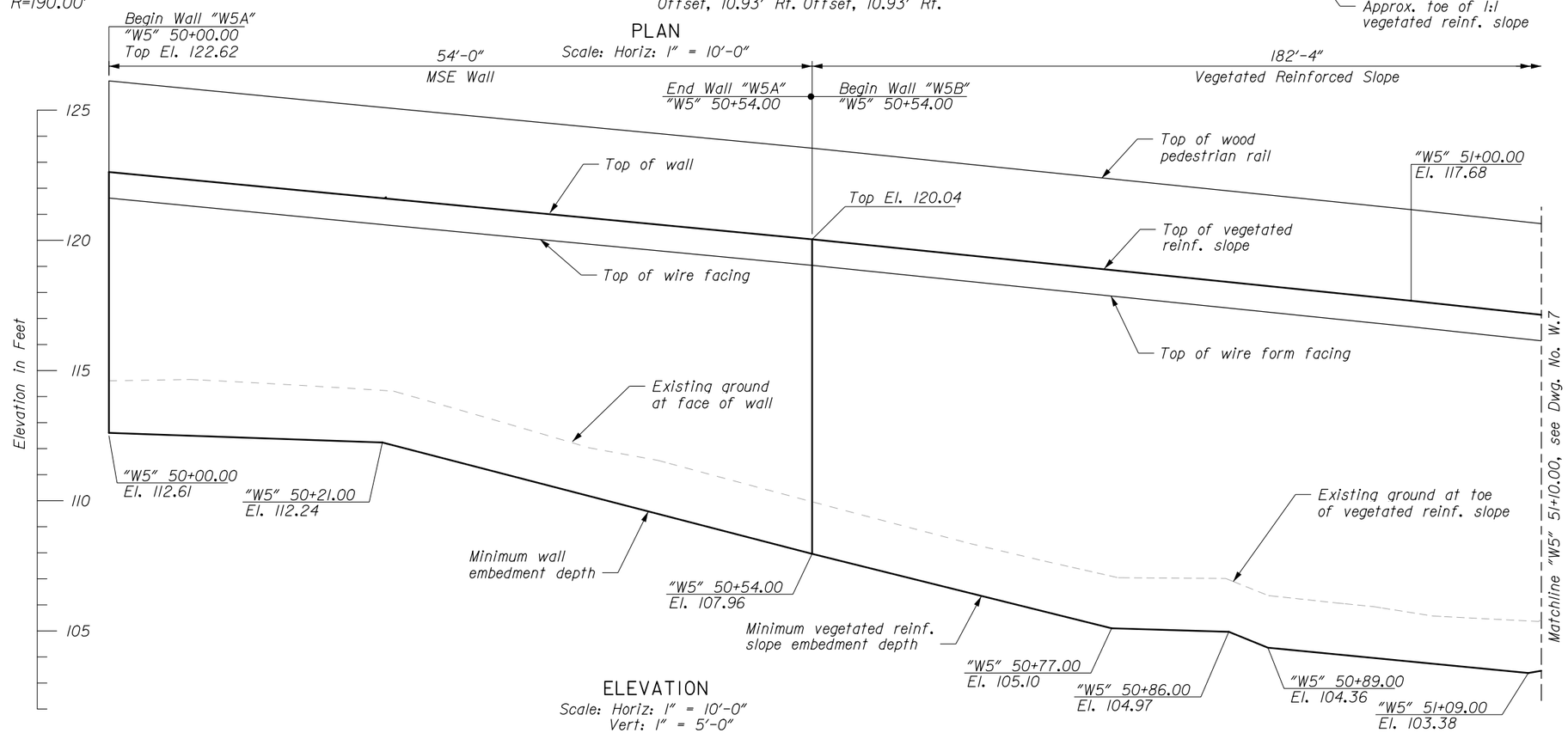

ELEVATION
Scale: Horiz: 1" = 10'-0"
Vert: 1" = 5'-0"

Notes:
1. Top of wall elevations and locations are set as shown on plans and applicable details. Bottom of wall positioning may be adjusted in order to meet top of wall criteria, minimum wall embedment criteria, and wall manufacturer's design.
2. For Typical Sections, see Dwg. No. J.9 & J.10.

U.S. DEPARTMENT OF TRANSPORTATION
FEDERAL HIGHWAY ADMINISTRATION
WESTERN FEDERAL LANDS HIGHWAY DIVISION

HISTORIC COLUMBIA RIVER HIGHWAY TRAIL

OREGON

WALL W5A & W5B

PLAN AND ELEVATION 1

NO.	DATE	BY	REVISIONS	NO.	DATE	BY	REVISIONS	DESIGNED BY	DRAWN BY	CHECKED BY	SCALE	PROJECT TEAM LEADER	BRIDGE DRAWING	DATE	DRAWING NO.
								D WAGNER	D MONK	D TAKASUMI	1"=10'-0"		of	APRIL 2014	J.6

24-Jun-2014 03:08 PM

...ø0R100ljel.dgn [Int_ft2D]

STATE	PROJECT	SHEET NUMBER
OR	DOT CRGNSA 100(1)	J.7

FINAL DAP

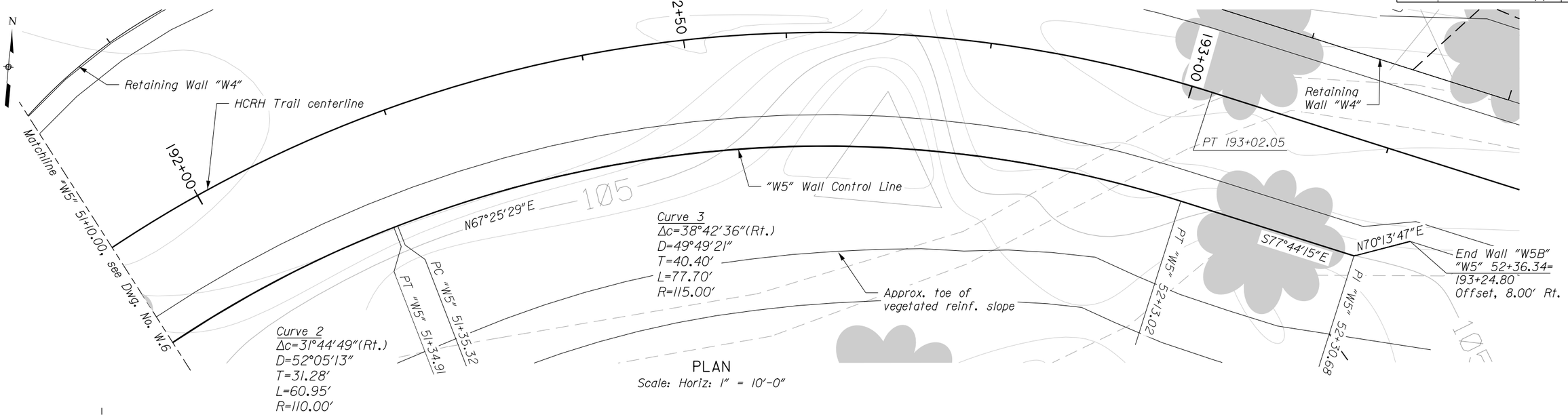

PLAN

Scale: Horiz: 1" = 10'-0"

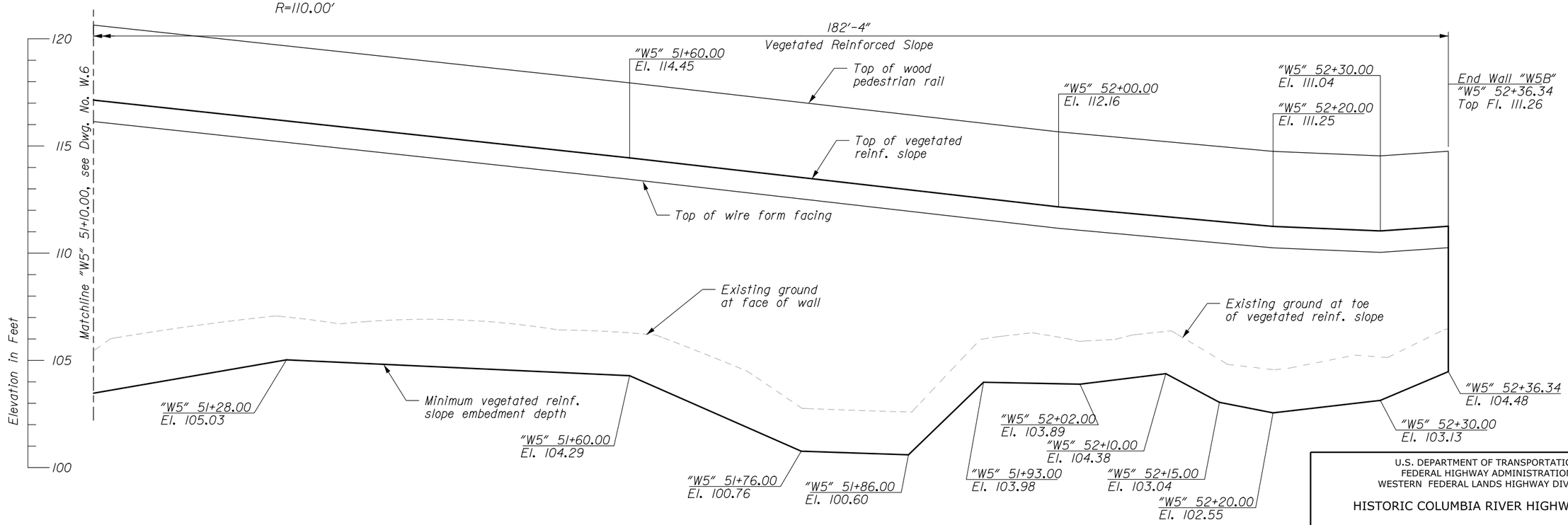

ELEVATION

Scale: Horiz: 1" = 10'-0"
Vert: 1" = 5'-0"

U.S. DEPARTMENT OF TRANSPORTATION
FEDERAL HIGHWAY ADMINISTRATION
WESTERN FEDERAL LANDS HIGHWAY DIVISION

HISTORIC COLUMBIA RIVER HIGHWAY TRAIL

OREGON

WALL W5A& W5B

PLAN AND ELEVATION 2

NO.	DATE	BY	REVISIONS	NO.	DATE	BY	REVISIONS	DESIGNED BY	DRAWN BY	CHECKED BY	SCALE	PROJECT TEAM LEADER	BRIDGE DRAWING	DATE	DRAWING NO.
								D WAGNER	D MONK	D TAKASUMI	1"=10'-0"		of	APRIL 2014	J.7

24-Jun-2014 03:10 PM

...\OR100\je2.dgn [int_ft2D]

STATE	PROJECT	SHEET NUMBER
OR	DOT CRGNSA 100(1)	J.8

FINAL DAP

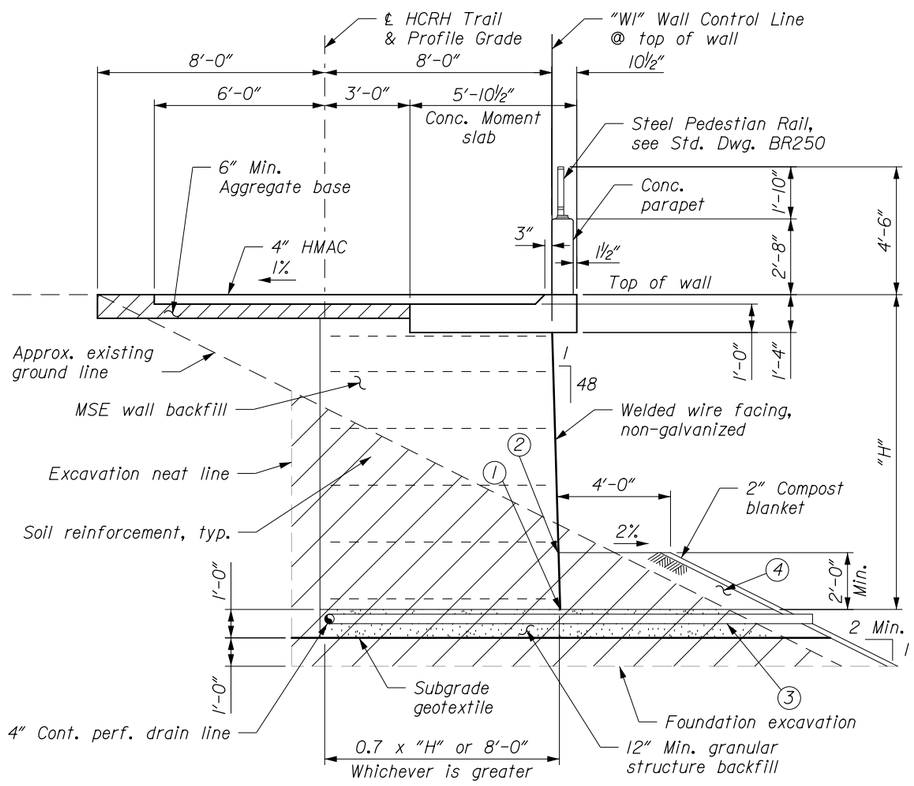

TYPICAL SECTION - WALL "W1"

Scale: 3/16" = 1'-0"

1. Bottom of wall.
2. Finish grade at bottom of wall.
3. 4" Drain line with 0.5% min. slope each end of wall. Discharge to day-light.
4. 12" Min. selected general backfill.

U.S. DEPARTMENT OF TRANSPORTATION
FEDERAL HIGHWAY ADMINISTRATION
WESTERN FEDERAL LANDS HIGHWAY DIVISION

HISTORIC COLUMBIA RIVER HIGHWAY TRAIL

OREGON

WALL DETAILS 1

NO.	DATE	BY	REVISIONS	NO.	DATE	BY	REVISIONS	DESIGNED BY	DRAWN BY	CHECKED BY	SCALE	PROJECT TEAM LEADER	BRIDGE DRAWING	DATE	DRAWING NO.
								D WAGNER	T CHANCELLOR	D TAKASUMI	3/16" = 1'-0"		of	APRIL 2014	J.8

23-Jun-2014 09:25 AM

...#OR100jfl.dgn [int_f120]

STATE	PROJECT	SHEET NUMBER
OR	DOT CRGNSA 100(1)	J.9

FINAL DAP

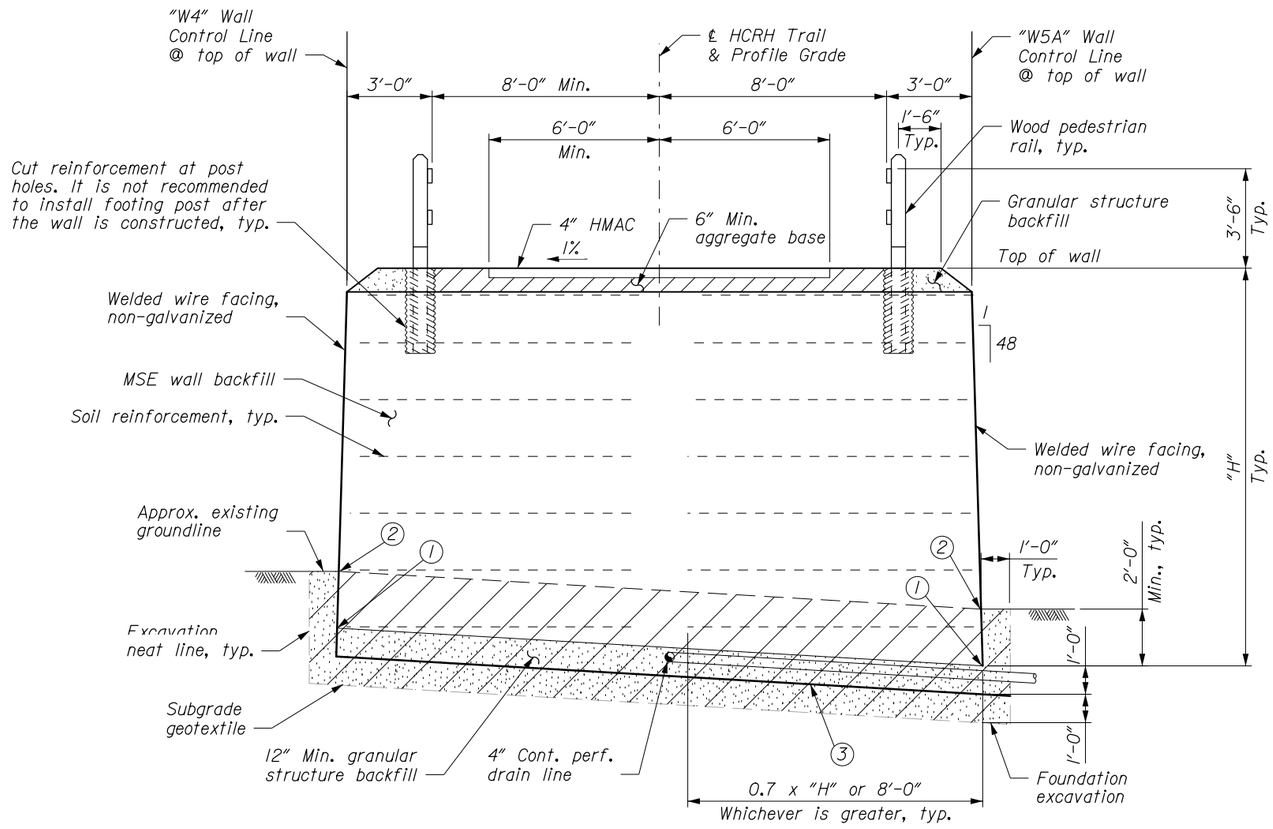

TYPICAL SECTION - WALL "W4" & "W5A"

Scale: 3/16" = 1'-0"

1. Bottom of wall.
2. Finish grade at bottom of wall.
3. 4" Drain line with 0.5% min. slope at 100' spa. max. Discharge to day-light at toe of slope.

U.S. DEPARTMENT OF TRANSPORTATION
FEDERAL HIGHWAY ADMINISTRATION
WESTERN FEDERAL LANDS HIGHWAY DIVISION

HISTORIC COLUMBIA RIVER HIGHWAY TRAIL

OREGON

WALL DETAILS 2

NO.	DATE	BY	REVISIONS	NO.	DATE	BY	REVISIONS	DESIGNED BY	DRAWN BY	CHECKED BY	SCALE	PROJECT TEAM LEADER	BRIDGE DRAWING	DATE	DRAWING NO.
								D WAGNER	T CHANCELLOR	D TAKASUMI	3/16" = 1'-0"		of	APRIL 2014	J.9

23-Jun-2014 09:27 AM

...#OR100j12.dgn [Int_ft20]

STATE	PROJECT	SHEET NUMBER
OR	DOT CRGNSA 100(1)	J.10

FINAL DAP

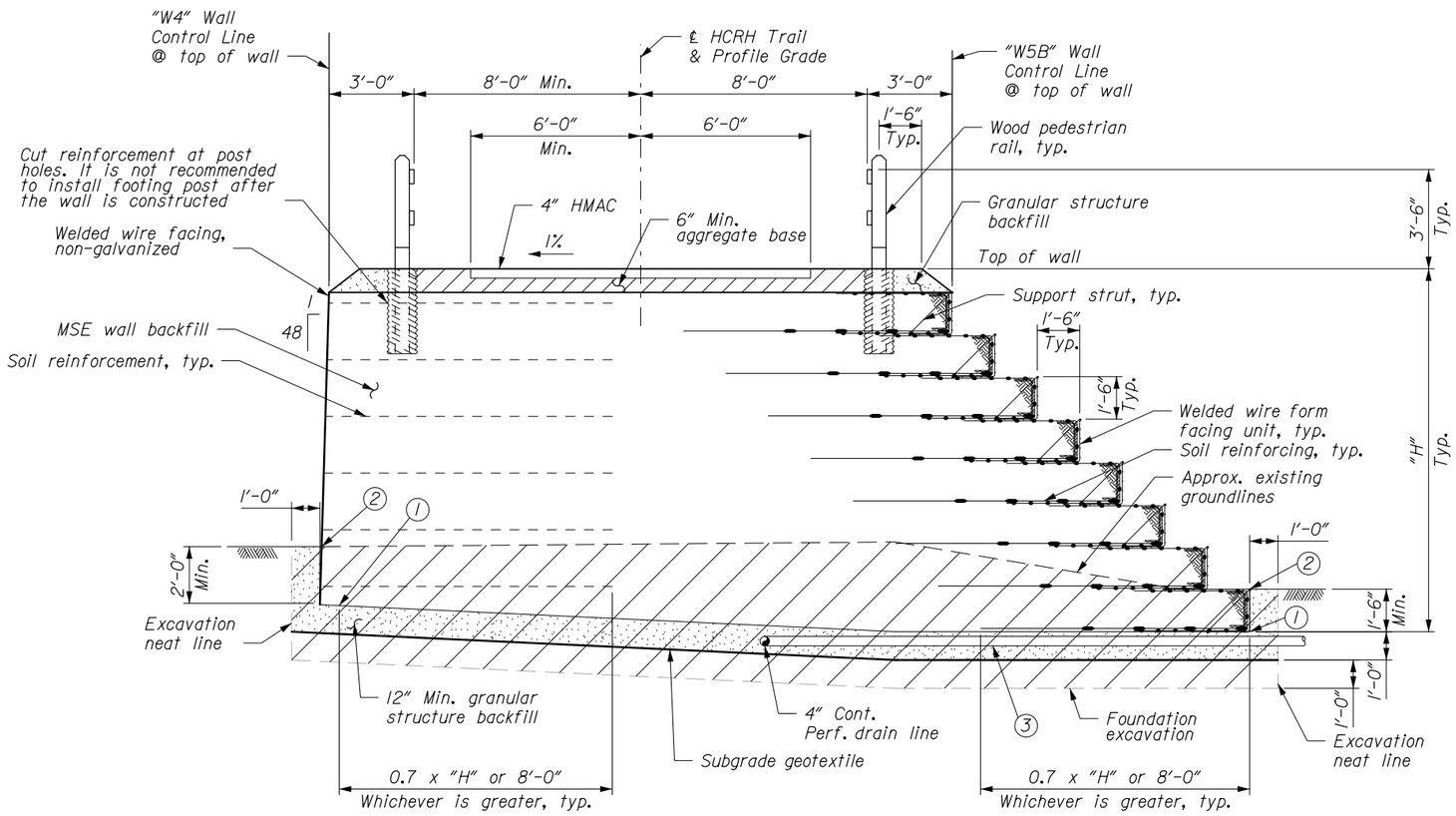

TYPICAL SECTION - WALL "W4" & "W5B"

Scale: 3/16" = 1'-0"

1. Bottom of wall.
2. Finish grade at bottom of wall.
3. 4" Drain line with 0.5% min. slope at 100' spa. max. Discharge to day-light at toe of slope.

U.S. DEPARTMENT OF TRANSPORTATION
FEDERAL HIGHWAY ADMINISTRATION
WESTERN FEDERAL LANDS HIGHWAY DIVISION

HISTORIC COLUMBIA RIVER HIGHWAY TRAIL

OREGON

WALL DETAILS 3

NO.	DATE	BY	REVISIONS	NO.	DATE	BY	REVISIONS	DESIGNED BY	DRAWN BY	CHECKED BY	SCALE	PROJECT TEAM LEADER	BRIDGE DRAWING	DATE	DRAWING NO.
								D WAGNER	T CHANCELLOR	D TAKASUMI	3/16" = 1'-0"		of	APRIL 2014	J.10

...#OR100jf3.dgn [Int_ft20] 23-Jun-2014 09:29 AM