ROAD USER FEE TASK FORCE

ROAD USER FEE Task Force

A Mileage Fee

As a Practical Matter . . .

. . . It Can Be Done!

Road User Fee Task Force

A brief description of RUFTF's work to date ...

ROAD USER FEE Task Force

Policy Requirements

- Accurate
- Reliable, Secure and Technologically Feasible
- Not Cover Mileage Outside Oregon
- Protects Privacy
- Affordable
- Minimal Burden on Private Sector
- Seamless Transition
- Minimal Evasion Potential

RUFTF Recommends

A Mileage Fee

ROAD USER FEE Task Force

Road User Fee Task Force

How A Mileage Fee Would Work

- **Rate –** 1.25 Cents Per Mile (equivalent to Gas Tax)
- **Fee Collection** - At Service Stations or Centralized
- **Data Collection** - Calculated by Electronic Odometer
- **Data Transmission** – Mileage Total Transmitted by Radio Frequency
- **Payment** - With Fuel Purchase or Monthly Billing

ROAD USER FEE Task Force

Road User Fee Task Force

Mileage Fee – Integration with Fuel Tax

- **Phasing**

  - Mileage Fee Imposed on Equipped Vehicles Only With Other Vehicles Paying Fuel tax

  - Electronic Odometer Required for New Vehicles

- **Fuel Collection Retained**

  - During Phasing Period

  - As Discouragement to Evasion of Mileage Fee

  - As Redundant System

ROAD USER FEE Task Force

Road User Fee Task Force

Mileage Fee – Principal Areas of Difficulty

* Technology
* Finance
* Administration
* Politics

ROAD USER FEE Task Force

Technology

Road User Fee Task Force

Technology Development and System Integration for a Vehicle Miles Traveled Based Revenue Collection System Prototype

Project Status Update

Department of Industrial and Manufacturing Engineering
Oregon State University

November 21, 2003

Review of Technology Configurations

- OSU Project Objectives
  - Develop and test “prototype” or “demonstration” electronic Vehicle Miles Traveled (VMT) based revenue collection systems based on a “pay when you fuel” concept
  - Learn how various technologies perform
  - Learn what system design works best

Review of Technology Configurations

- Technology configurations
  - A specific system concept of an electronic VMT-based revenue collection system
  - Two technology configuration prototype (demonstration) systems are being developed
- Technology configurations are named after the distinguishing technology found on the on-vehicle devices
  - GPS
  - Odometer

Basic Functions of a Technology Configuration

- Collect VMT (within Oregon)
- Transfer VMT data from Vehicles when fueling
- Process VMT data and charge the proper fee

GPS Technology Configuration

VMT collection

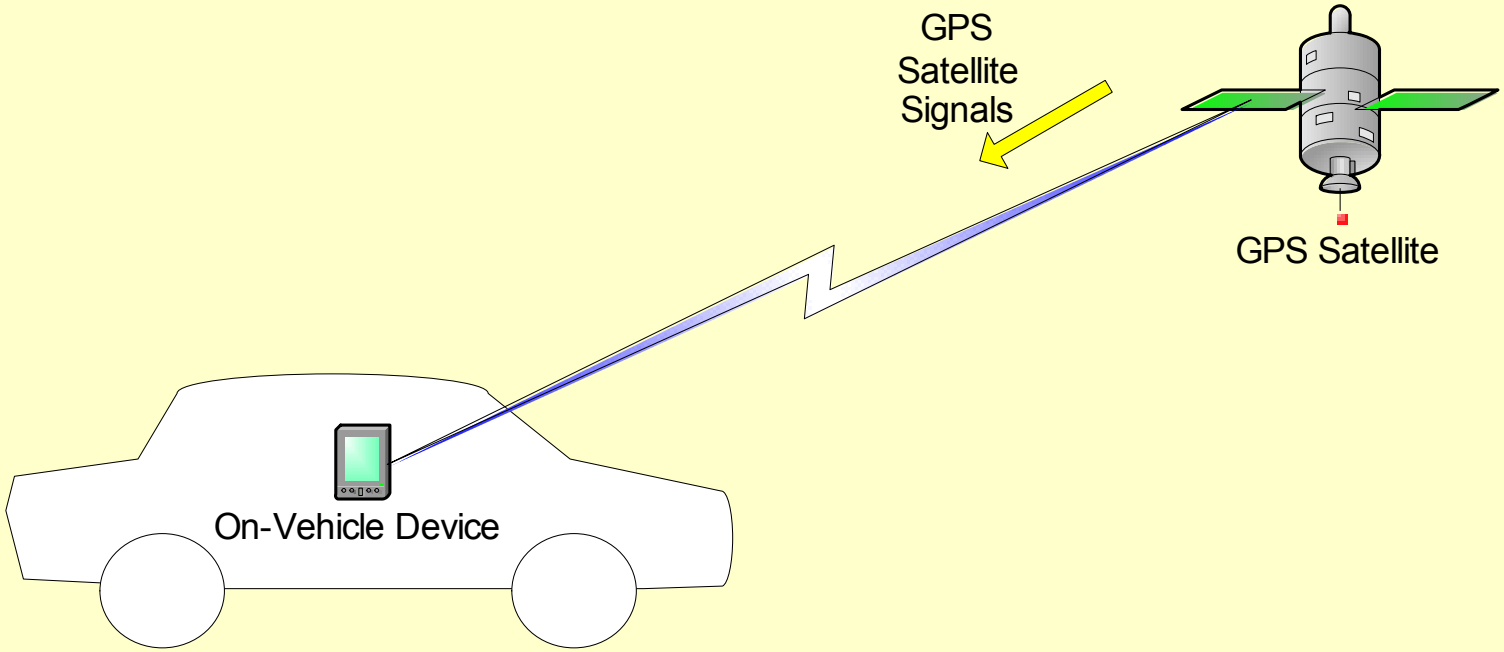

GPS Technology Configuration

VMT data transfer from vehicles when fueling

* Communication is short range!

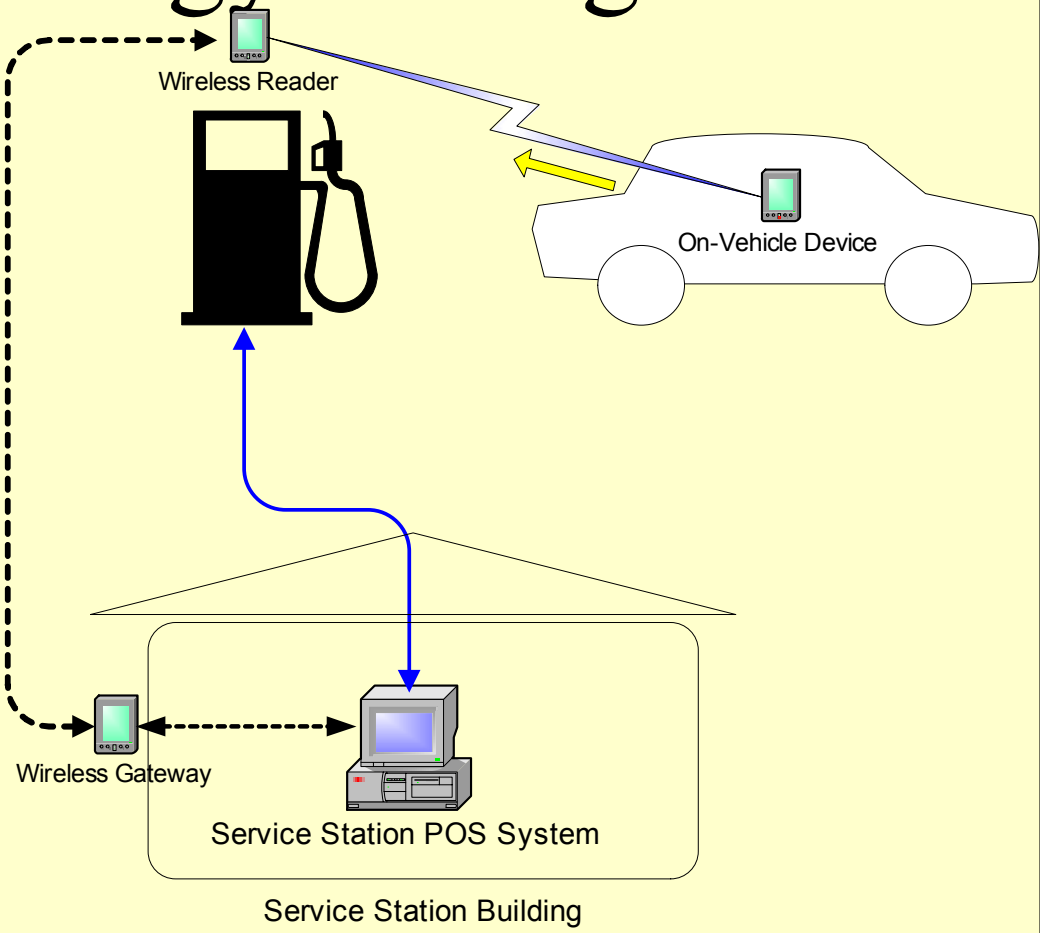

GPS Technology Configuration

Process VMT data and charge the proper fee

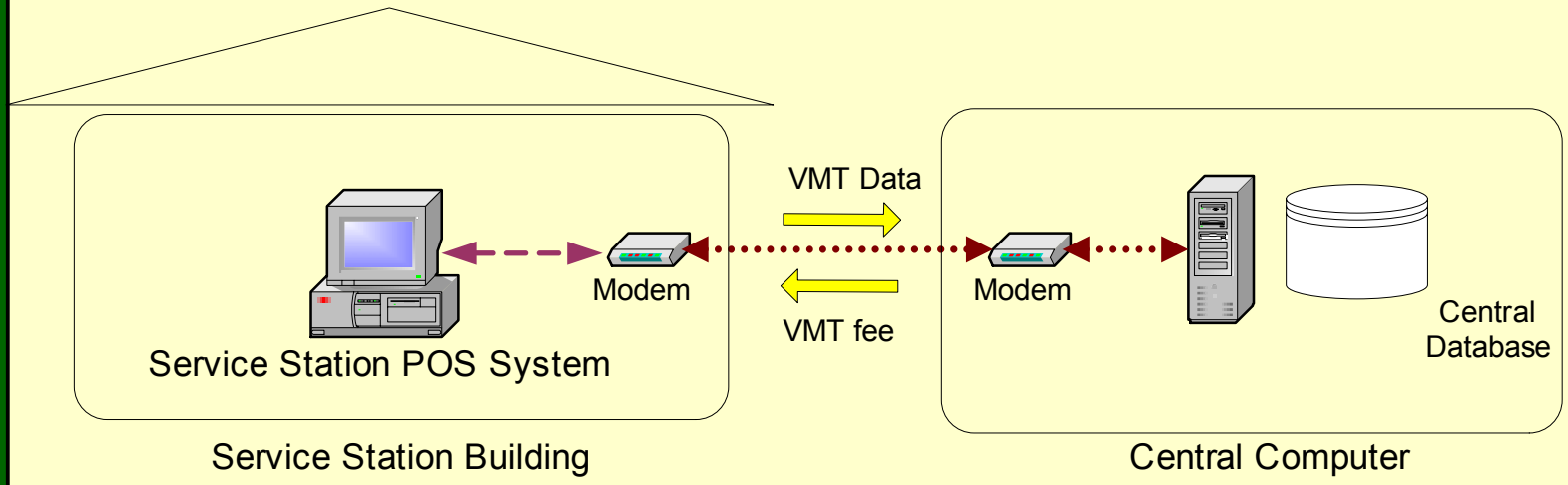

GPS Technology Configuration

Technology Configuration

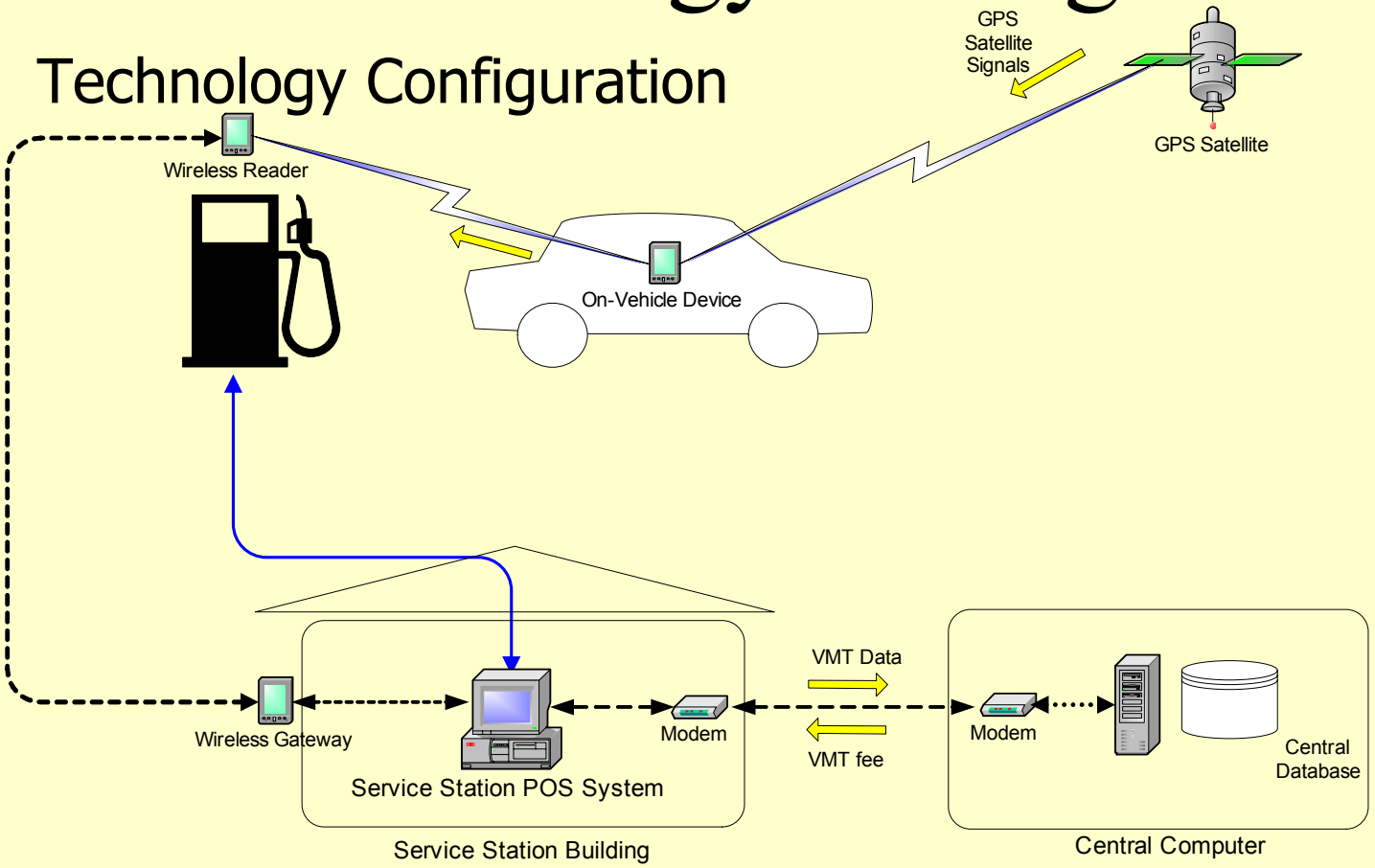

Odometer Technology Configuration

VMT Collection

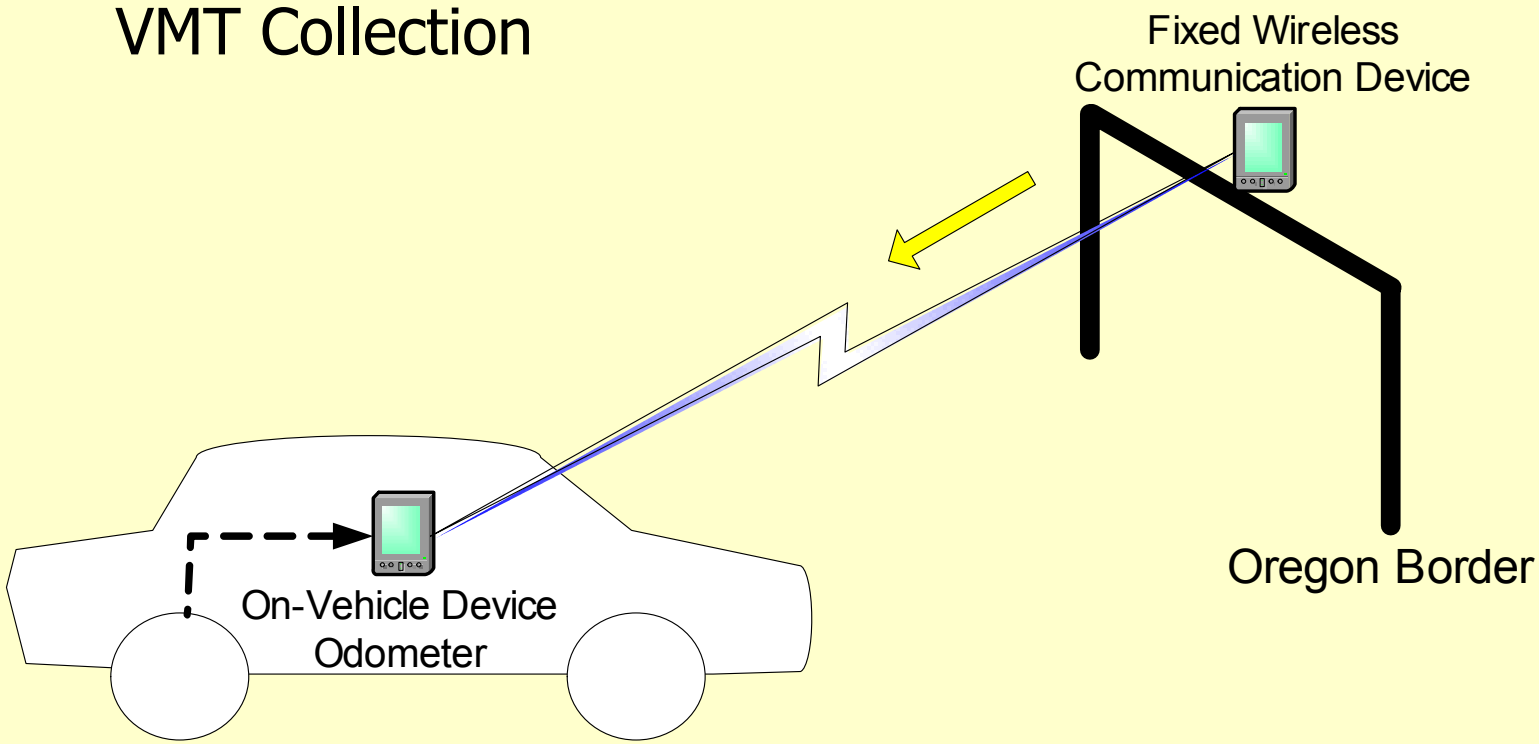

Road User Fee Task Force

Odometer Technology Configuration

VMT data transfer from vehicles when fueling

* Communication is short range!

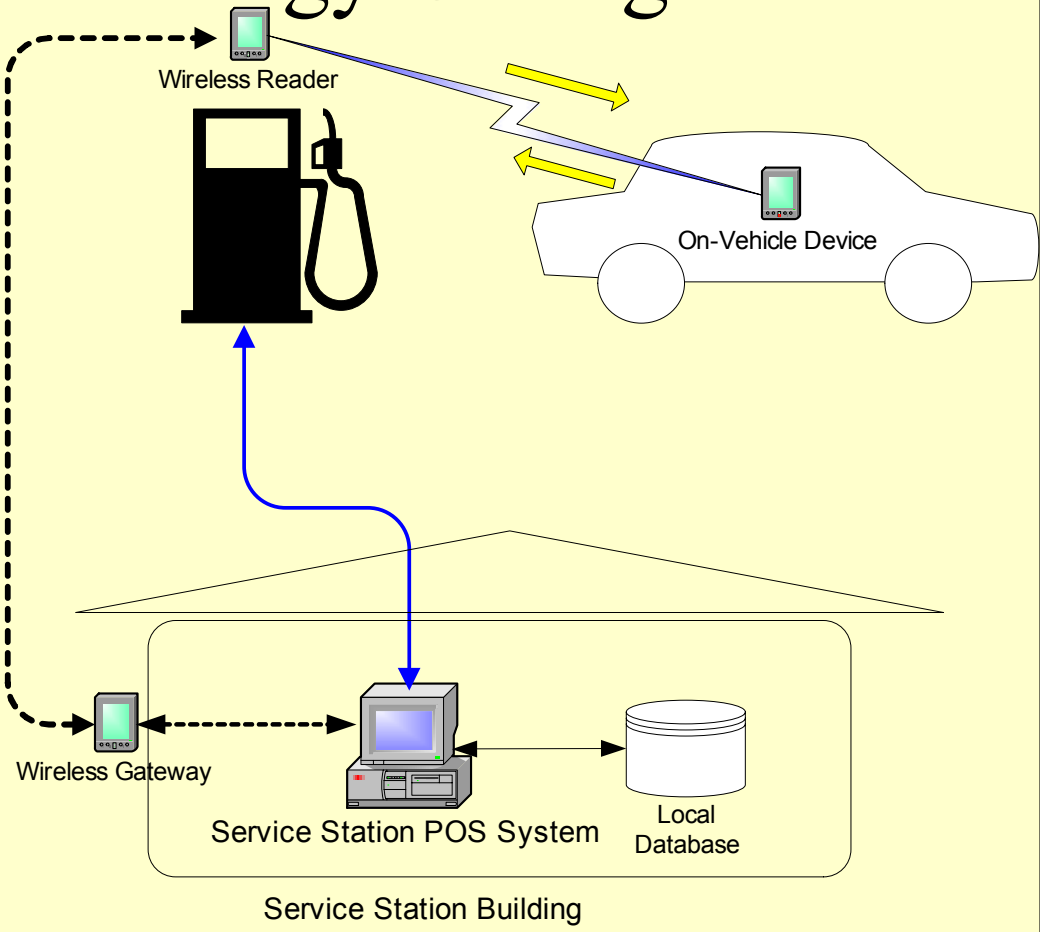

Fee calculation is local

Odometer Technology Configuration

Technology Configuration

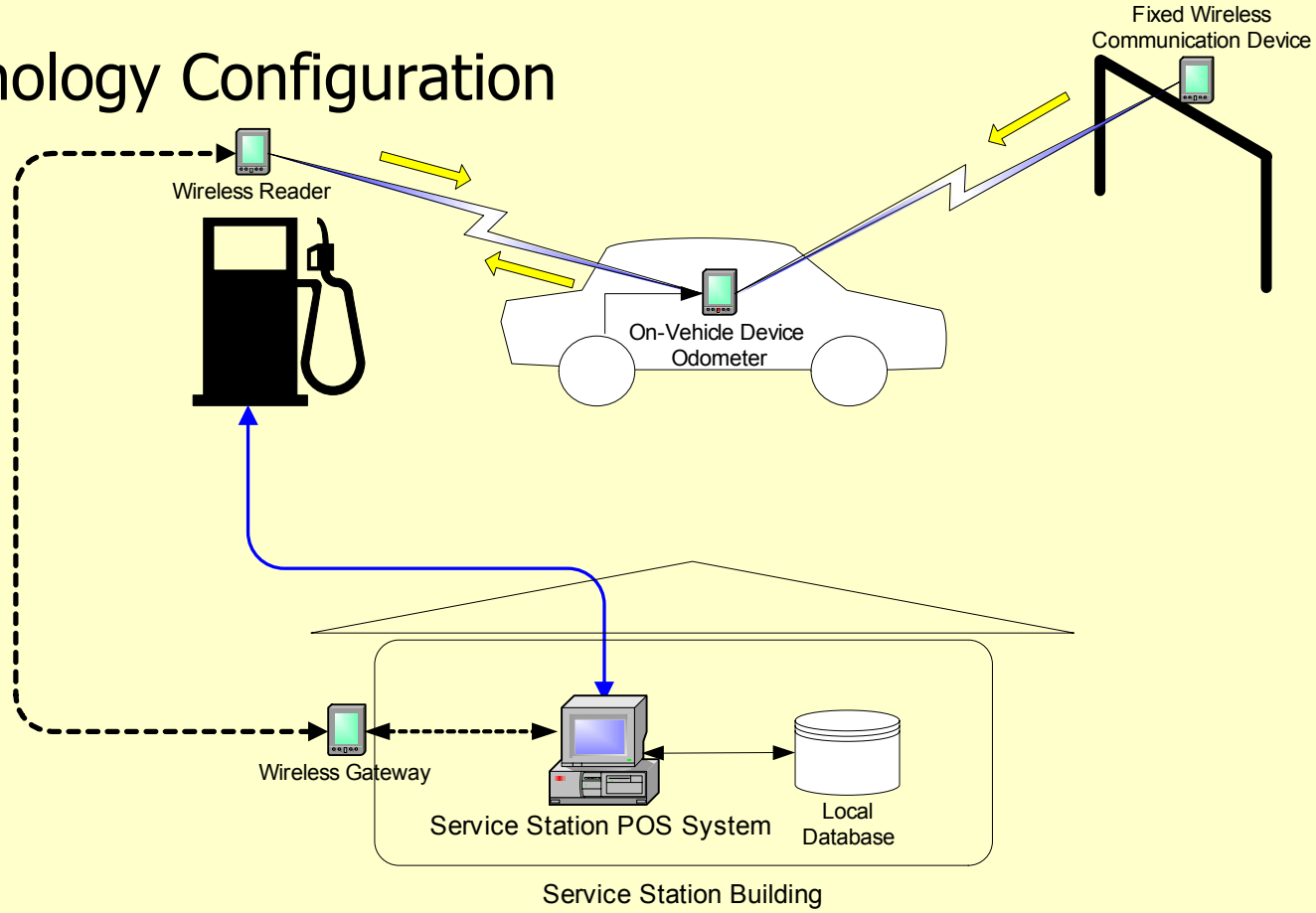

Policy Requirements

- ✓ **Accurate**
- ✓ **Reliable, Secure and Technologically Feasible**
- ✓ **Not Cover Mileage Outside Oregon**
- ✓ **Protects Privacy**
- ❑ Affordable
- ❑ Minimal Burden on Private Sector
- ❑ Seamless Transition
- ❑ Minimal Evasion Potential

ROAD USER FEE Task Force

Financial

Financial - Cost of Implementation

- Installation of Electronic Odometers
  - No retrofitting of vehicles (… retrofit cost estimate is $373 per vehicle)
  - Components installed during vehicle manufacture and integrated into vehicle systems
  - Incremental costs paid by consumers at vehicle purchase (… cost estimate range from *zero* to $225)

ROAD USER FEE Task Force

Financial – Cost of Implementation

- Installation of Non-vehicle Technology
  - Non-vehicle equipment: $33 million*
  - Annual operating costs: $1.6 million*
  - Operating costs and debt service on "other equipment" would increase mileage fee less than 2%

*Further refinements expected from pilot test results

ROAD USER FEE Task Force

Policy Requirements

- ✓ Accurate
- ✓ Reliable, Secure and Technologically Feasible
- ✓ Not Cover Mileage Outside Oregon
- ✓ Protects Privacy
- ✓ **Affordable**
- ❑ Minimal Burden on Private Sector
- ❑ Seamless Transition
- ❑ Minimal Evasion Potential

ROAD USER FEE Task Force

Administration

Administration

- Problem: How to integrate mileage fee collection system with fuel tax collection system?

- Answer: **VMTCAR**

VMTCAR

- Vehicle
- Miles
- Traveled
- Collected
- At
- Retail

ROAD USER FEE Task Force

Road User Fee Task Force

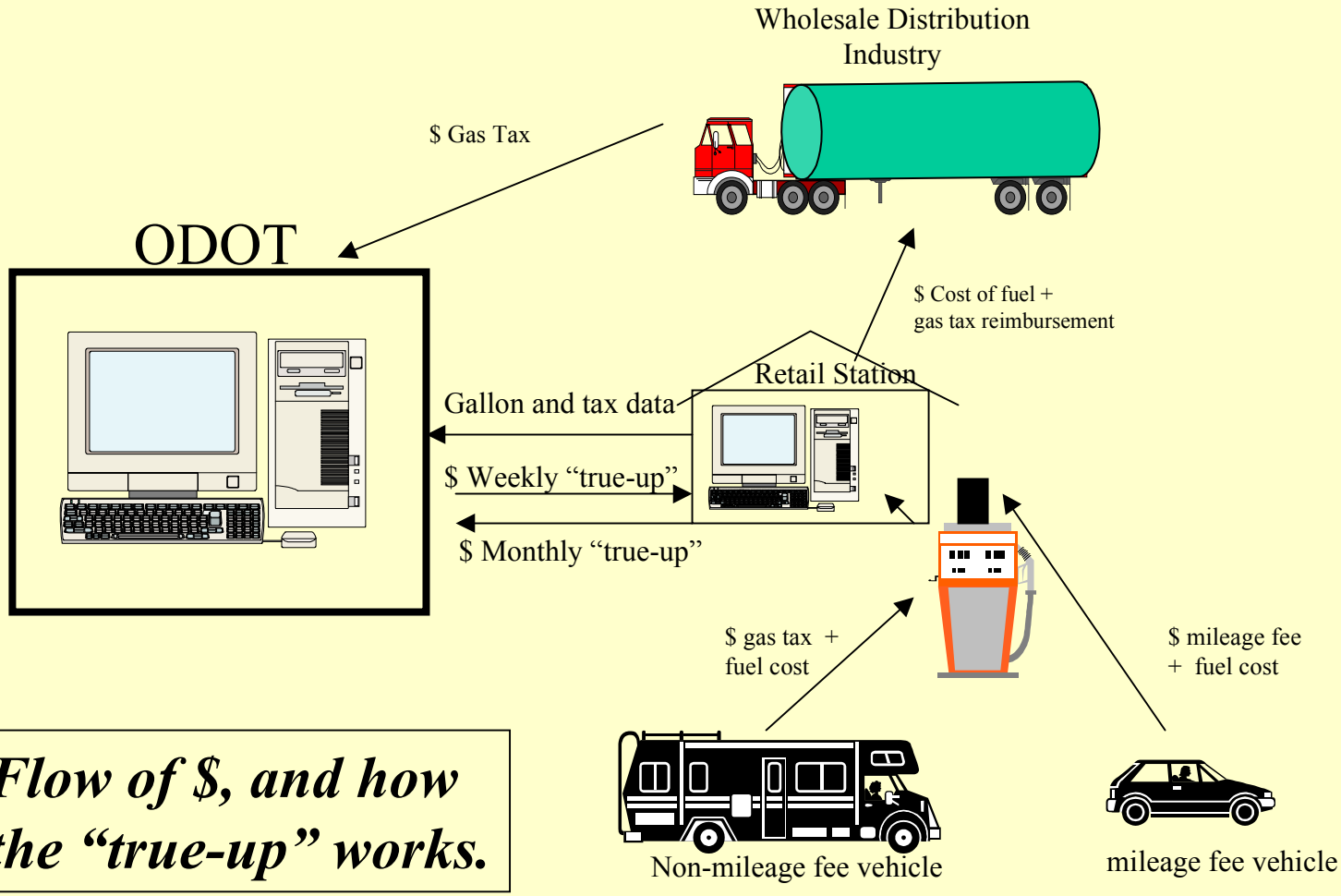

Flow of $, and how the "true-up" works.

ROAD USER FEE Task Force

Road User Fee Task Force

Wholesale Level

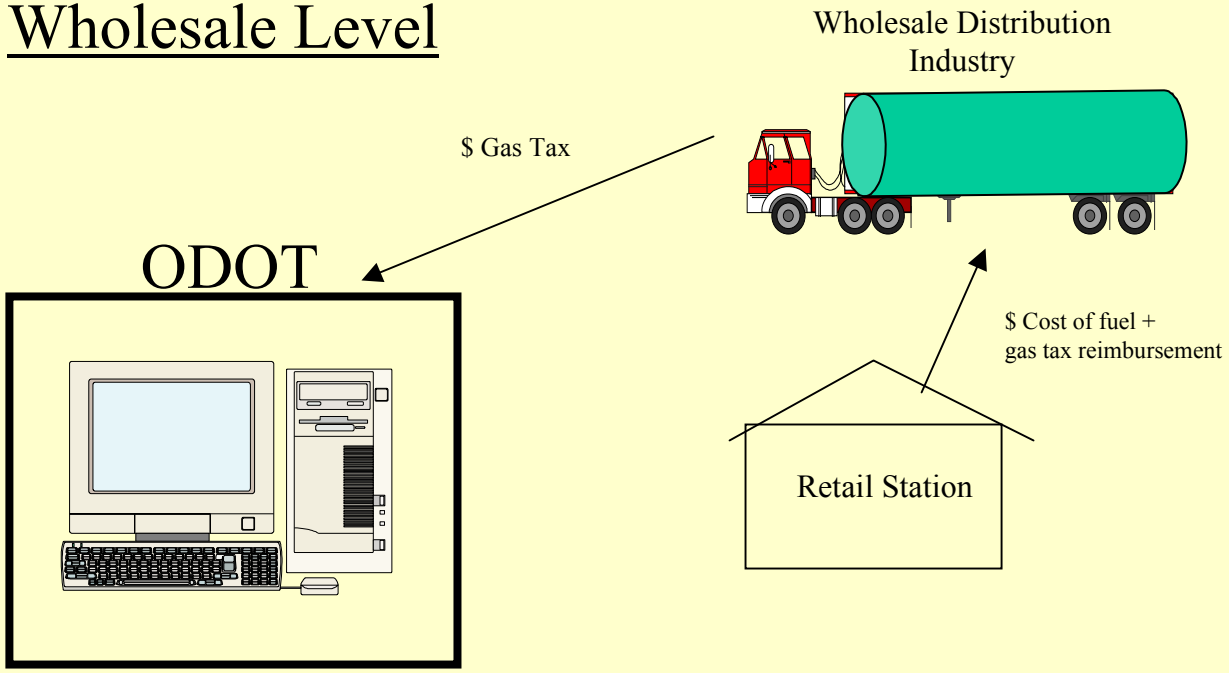

No Change in Gas Tax Collection

- Most $ continues to come in via proven collection method
- Anti-evasion procedures retained
- No changes w/ wholesale distribution industry
- “Back-up” to Mileage Fee
- Effective transitional course

ROAD USER FEE Task Force

Road User Fee Task Force

Simplicity for consumers:

- Pay either gas tax, or mileage fee - not both
- Deal with gas station only, not ODOT, etc

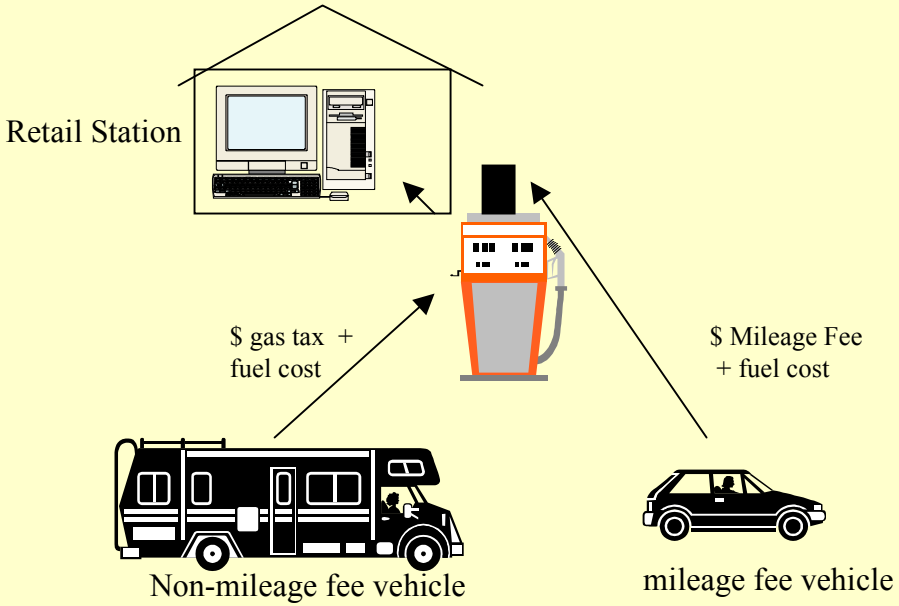

Consumer Level

ROAD USER FEE Task Force

Road User Fee Task Force

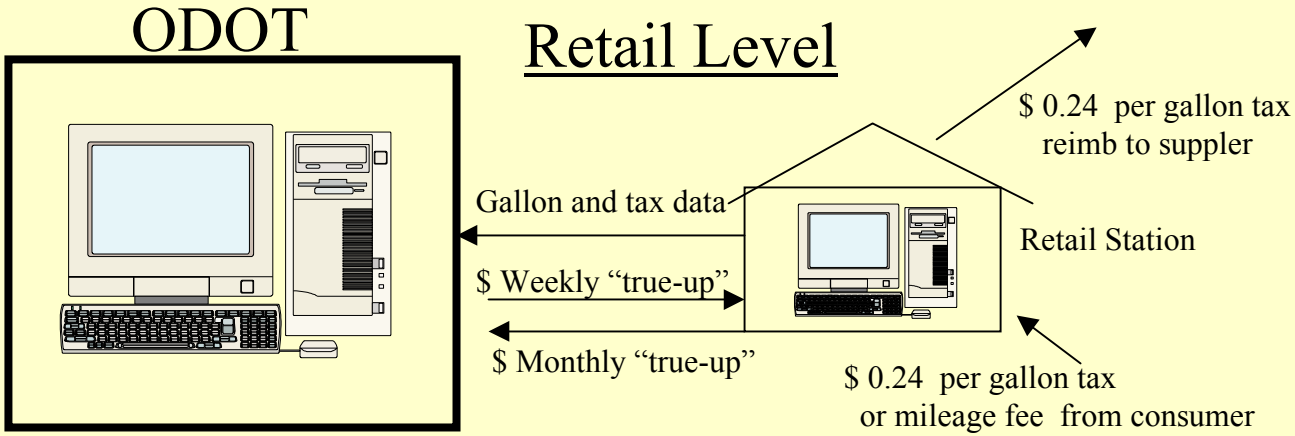

- Once per week, all station tax revenue recorded by the ODOT central computer is run through a "true-up" calculation at ODOT.
  - If fuel taxes / mileage fees collected by the station are **insufficient** to equal the $0.24 per gallon the station paid, ODOT will electronically remit the amount due to the station's bank account.
  - If the total fuel taxes / mileage fees collected by the station are in **excess** of total gallons sold time $0.24 per gallon, no further action is done until the end of month.
- At the end of each month, a bill for any net balance due to ODOT is sent to the station.

ROAD USER FEE Task Force

How VMTCAR Supports RUFTF Policy Requirements

Minimal Burden on Private Sector

- No change in current fuels tax payment / reporting to ODOT by wholesale distribution industry.
- "Paperless" reporting / pmt for retail level.
- Consumer pays either mileage fee or fuels tax, depending on how vehicle is equipped.

ROAD USER FEE Task Force

How VMTCAR Supports RUFTF Policy Requirements

Seamless Transition

- **More hybrid vehicles + More mileage fee equipped vehicles = mileage fee is larger % of revenue stream. Transition period allows ODOT to assess risk points, revenue leaks before risking majority of revenue stream, and use experience to provide more convenience to the private sector and consumers, and better compliance for ODOT**
- **Proven "backup" system will assure continuation of revenue stream.**

ROAD USER FEE Task Force

How VMTCAR Supports RUFTF Policy Requirements

Minimal Evasion Potential

- Bulk of revenue stream is still at distributor level - fewer taxpayers = easier to obtain compliance.
- Conversely, smaller % of revenue stream is with mileage fee "true-up" at the retail level where far more taxpayers are involved.
- Current audit procedures and multi-state anti-evasion processes still effective.
- Still have to buy fuel.

ROAD USER FEE Task Force

Policy Requirements

- ✓ Accurate
- ✓ Reliable, Secure and Technologically Feasible
- ✓ Not Cover Mileage Outside Oregon
- ✓ Protects Privacy
- ✓ Affordable
- ✓ **Minimal Burden on Private Sector**
- ✓ **Seamless Transition**
- ✓ **Minimal Evasion Potential**

ROAD USER FEE Task Force

Policy Requirements
Conclusion

- ✓ Accurate
- ✓ Reliable, Secure and Technologically Feasible
- ✓ Not Cover Mileage Outside Oregon
- ✓ Protects Privacy
- ✓ Affordable
- ✓ Minimal Burden on Private Sector
- ✓ Seamless Transition
- ✓ Minimal Evasion Potential

ROAD USER FEE Task Force

Politics

Politics

- Public Acceptance
- Fuel Distribution Industry
- Automobile Manufacturers
- Federal Transportation Legislation

Pilot Program

- **Functional Test of Technology**
  - Assemble Equipment
  - Operational Test
- **Field Test**
  - Design of Field Test
  - Implementation Plan for Field Test
  - Prospective contractors for data collection and analysis in each Field Test component
  - Evaluation

ROAD USER FEE Task Force

Technology Configuration Components

- On-vehicle VMT collection devices
- Wireless data transfer devices
  - Service station
  - Border “beacons”
- Point-Of-Sale system
  - Fuel dispenser control
- Integration software and communications links
- Databases

Development Status

- On-vehicle VMT collection devices/ Wireless data transfer devices
  - Contract established with AFX
  - Status → Mid December 2003
- Point-Of-Sale system
  - Contract established with DCSS (Chicago)
  - Status → Mid December 2003
- Integration software and communications links
  - Developed by OSU
  - Status → Completed
- Databases
  - Developed by OSU
  - Status → Completed/Central server purchased & running

Test Site and Vehicles

- Test service station
  - OSU Old Forest Research Lab
  - Former service vehicles fueling area
- ODOT Fleet Services has provided test vehicles
  - Three (3) 1991 Dodge Dynasty
- Fuel dispenser simulator
  - Gilbarco Encore 300 fuel dispenser simulator has been purchased
- Comprehensive test plan in progress

Test Site at OSU

Vehicles – 1991 Dodge Dynasty, form ODOT Fleet Services

Fuel Dispenser Simulator & OSU Lab

Next Steps

- Integrate technology configuration components and debug
- Setup test site
- Execute test plan
- Anticipated date to start testing
  - End of December 2003

User Testing Phase

- User testing phase
  - Testing a technology configuration with actual drivers
- Major tasks - Technological
  - Production of on-vehicle devices and data transfer equipment
  - Installation of on-vehicle devices
  - Service station equipment and installation
    - Cost
    - Time
  - Central database site

Production of On-Vehicle Devices

- Production volumes required can be met
  - Approximately 400 on-vehicles devices
- Cost
  - Approximately $225 per device
- Need additional packaging development

Installation of On-Vehicle Devices

- GPS-based VMT data collection devices
  - Installation is not constrained by the type of vehicle
- Odometer-based VMT data collection devices
  - Vehicle specific installation
    - More costly and time consuming
  - Devices that can be connected directly to the OBDII system require extensive development
    - At least 6 months

Service Station Requirements

- POS System and computer terminal
- Data collection computer and software
- Data transfer devices
  - One per dispenser
  - Three gateway devices per service station
- Dedicated phone line

Service Station Cost

- Assuming 5 service stations for the user testing phase
  - Replacement of POS System
    - POS system software
      - $17,475 ($3,495 per POS terminal)
      - Does not include hardware
    - Labor
      - 2 people for a week ~ $8000
      - Installation is done during down times or overnight
  - Data transfer devices
    - Device on dispenser → $235
    - Device on service station → $272
    - Installation cost
      - Approximately $30,000

Service Station Cost

- Dedicated Phone Line
  - Installation cost
    - Between $155 and $650 depending on the wiring requirements
  - Monthly fee
    - $26.89 per station

Central Database Site

- TBD

Service Station Selection

- DCSS's POS system is not certified on some major oil company credit networks
  - Application and development process to be certified on a specific credit network
    - Could be up to 6 months
  - Option → Use independent service stations

Preliminary Cost*

- 400 vehicles, 5 service stations

		Qty	Sub Total
On-Vehicle Devices			
Cost	$223	400	$89,200
Installation	$150	400	$60,000
Data Transfer Devices			
Dispenser	$235	80	$18,800
Service Station	$272	15	$4,080
Installation	$6,000	5	$30,000
Service Station			
POS System (1 terminal)	$3,495	5	$17,475
Installation	$1,600	5	$8,000
Dedicated Phone Line			
Installation	$131	5	$655
Operation (1 year)	$324	5	$1,620
		Total	$229,830

Pilot Program *Timeline*

- **Functional Test of Technology**
  - Assembly of Equipment ~Complete December '03
  - Operational Test - December '03 to March '04
- **Field Test**
  - Design & Implementation Plan – Dec. '03 to May '04
  - Implementation - July '04 to January '05
  - Start-up – February 1 '05
  - Completion – January 31 '07
  - Evaluation – February '07 to June '07

ROAD USER FEE Task Force

ROAD USER FEE Task Force

Questions?

www.odot.state.or.us/ruftf/

ROAD USER FEE Task Force