Northwest Signal
Supply, Inc.

Voyage Software

Operating Manual

Version 2.1.0

(3/13/08)

Copyright © 2007 by Northwest Signal Supply, Inc.

All Rights Reserved.

TABLE OF CONTENTS

Introduction 5
Features 6
Voyage Software in the 2070 Environment 11
Using the Keyboard 12
Installation 16
2070-TS2 Hardware Configurations 20
2070L Hardware Adjustments 21
2070L Hardware Adjustments (Specific to the Eagle 2070L) 22
2070L Hardware Adjustments (Specific to the Econolite 2070 ATC) 23
TS2 Cabinet Configurations 24
Run Mode 25
Introduction 26
Standard Displays 26
- Controller Run Menu 28
- Faults 52
- Time Clock 54
- Preemption 56
- Transit Priority 61
- Internal Logic 65
- Comm Status 67
- Logs 69
- Connector I/O 77
- System 78
- System Run Screens 78
- System Run Screens, Con't 88

Program Mode 90
Controller 90
- Basic Phase Service Concepts 90
- Sequence Selection 99

Controller Programming Screens 104
- Voyage Coordination 140
- Coordination Programming Screens 162
- Coordination Examples 172

Time Clock 187

Clock Circuits 187
Time Clock Programming Screens 196
Preemption 201
Preempt Intervals 202
Entry Parameters 203
Sequence Parameters 206
Exit Parameters 208
Preemption Programming Screens 213
Preempt Examples 220
Communication and Reports 227
Communication Ports 227
Communication Methods 228
Master Controller to Local Controllers FSK Connection 233
Reports 235
Communication and Reports Programming Screens 239
Transit Priority 245
Transit Priority Examples 257
Input/Output Configuration 271
External Inputs 271
External Input Descriptions 277
External Outputs 283
External Output Descriptions 289
Input/Output Configuration Programming Screens 294
Internal Logic 299
Internal Logic Programming Screens 315
Internal Logic Examples 316
System 322
General 322
Split Variant Operation 323
Proactive Plan Selection 328
System Programming Screens 343
Utilities 342
Utilities Programming Screens 349
TS2 Port 1 Status Screens 358
Programming Charts 363
Glossary 389
Index 400

This page left intentionally blank.

Introduction

The Voyage controller software is a powerful program which operates in various configurations of 2070 controllers. Voyage offers many useful features including menu-driven keyboard programming, context sensitive help and dynamic displays of real-time operations. The software is easy-to-use; back-up timing plans allow the controller to be programmed in minutes. Voyage is ideal for unique applications, the built-in programming language, Internal Logic, allows for custom control algorithms.

Voyage can serve isolated intersections, “closed-loop systems” or be part of a larger central control system. The software can be programmed to cause a local intersection to operate in System Mode, allowing it to send the correct time and coord plan to other local controllers in the system, and to act as a System master.

The software will operate in various configurations of 2070 controllers including the standard 2070, 2070L, 2070N (NEMA version) and 2070NL (NEMA version). Any controller which conforms to NEMA/AASHTO/ITE Type 2070 ATC Specifications and utilizes the OS/9 software is a possible host for the Voyage software. Due to differences in the internal software supplied by hardware manufacturers, specific brands and models must be tested to insure proper operation.

Along with Voyage, a separate PC program, NWSCentral, is available to manage the Voyage software from a windows-based computer. NWSCentral is a useful system which provides intersection specific data entry, upload/download capability, database management and other valuable tools.

Benefits of Voyage – The Voyage and NWSCentral package is an evolving product. Northwest Signal Supply is an organization committed to conducting research into traffic signal theories that can be applied in the field. With this release we are giving traffic engineers several new methods for enhancing traffic flow, including:

Intersection Level

- **Flashing Yellow Left Turn Arrow** support, for easy and flexible setup of this powerful form of left turn control.
- **Preemption Queue-Delay Recovery** for recovery that dynamically selects the return phases based on which phases have waited the longest.

System Level

- **Local-to-Local Relays** to allow local intersections to share real-time status info with one another via Internal Logic. This powerful capability allows one intersection to actively respond to certain conditions at a neighboring intersection.

Features

The following is a list of features of the Voyage software. These features are described in detail in later chapters.

8 Vehicle Phases

8 Pedestrian Phases

12 Vehicle Overlaps

8 True Pedestrian Overlaps

Sequence Options

Standard Dual Ring

Sequential

Lead/Lag

Restricted Phases

Various Special Sequences some with Lead/Lag

Phase Timing Options

All Standard Interval Times (Min Green, Walk, etc.)

Volume Density (Variable Gap Timing)

Automatic Variable Max Times

Red Decimal On/Off

Inhibit Minimum Yellow

Dynamic Phase Length

Per Phase Options

Various Recall Modes (Max, Min, Ped, Soft)

Locking Detection by Phase (Red Lock, Yellow Lock)

Actuated Rest in Walk

Conditional Ped

Overlap Options

Not Ped Overlaps

Not Ped – Ped Overlaps

Flashing Overlaps

Extend-Clear Overlaps

Advanced Warning Logic

32 Detector Inputs

Fully Programmable for Call Phase Assignment, Yellow Lock, Inhibit-by-Time Clock, Extend Phase Assignment and Switch Phase Assignment

8 System detectors from the 32 local detectors

Detector Options

Alternate Detector Plans 2-4

Delay and Stretch

Switch

Conditional Delay

Disconnect (by timer or gap)

Detector and Video Fail Monitoring

Detector Simulation Mode

8 Service Plans

Alternate Sets of Phase Times (Min Green, Passage, Yellow, Red, Walk, Ped Clearance)

Alternate Recall Mode (Max, Min, Soft, Ped, Omit, etc.)

8 Max Plans

Different Set of Max Times and Failed Max Times Applied to Each Phase

Flashing Yellow Left Turn Arrow/5-Section Vehicle Signal Logic/Anti-Trap Logic

Flashing Yellow Left Turn Arrow

X Omits Y

Anti-Trap

Initialize/Flash Options

Select Phases and Intervals for Initialization (Flash Entry and Flash Exit)

Minimum Flash Time

First All-Red Time

Soft Flash (Flash via the Load Switches)

Controller Phasing/Timing Options

Dual Entry

Last Car Passage

Simultaneous Gap-Out

Red Revert

Flashing Don’t Walk Through Yellow

Conditional Service/Reservice

Dynamic Phase Length

32 Coordination Plans

Unique Coordinated Phases, Cycle Lengths, Offset Times, Per-Phase Force-Off Times and Dwell Times

Offset Seeking Options

Dwell

Fast Way (Lengthen or Shorten)

Add-Only

Coordination Options

Coordination Plans can Activate Time Clock Circuits

Permissive Types (Normal and Alternate)

Call any of 8 Service Plans or Max Plans

Coord Walk Rest

Repeated Phase Service w/phase omits

Coord Late Left Turn

Platoon Progression

15 Day Programs for Time Clock

200 programmable time clock events

10 Week Programs

35 Exception Days

Time Clock Options

Control Over 187 Clock Circuit Functions

Manual Override of Clock Circuits

Daylight Savings Time

Coordination Sync Reference Time

8 Preempt Inputs (Assignable for EV or RR)

8 Levels of Priority

Memory On/Off

Delay

Minimum Reservice Time

Light Rail Train Operation

Preempt Entry Controls

Minimum Interval Times (Min Green, Walk, Ped Clearance)

Ped and Vehicle Omit Prior to Preempt

Preempt Exit Modes

Exit to Coordination Plan

Exit to Max Plan

Exit to Free

Preempt Priority Return

Preempt Queue-Delay Return

Preempt Options

Override and Fail Timers

Coordination During Preemption

Customizable Preempt Interval Sequences

Special Interval Programming (Direct Control of Outputs)

Direct or Remote Communication Setup

Communication Port Flexibility

Baud Rates from 1200 bps to 19200 bps

Ethernet Port and IP (Internet Protocol) Addressing

Dial-up Modem Support

Multiple Protocol Support (NTCIP, AB3418E, Proprietary)

System Mode Operation

Mode 1: Master Broadcasts Time Sync and Coord Plan to Local Controllers

Mode 2: Master Polls Local Controllers, in Addition to Mode 1 Broadcast

Volume Logs

Variable Log Period (up to 60 Minutes)

All Detector Inputs Available for Counting

Measure of Effective Logs

Variable Log Period (up to 60 Minutes)

4 Custom Report Logs

3 Scheduled Logs (Auto-Dialed)

1 Request-Only Log

User Defined and Standard Report Functions

Transit Priority

8 Separate Transit Inputs

Lengthens Transit Phases, Shortens Non-transit Phases

Truck Priority Operation

Priority Log: 1000 Individual, Wrap-around Log Entries

3 Standard I/O Modes

2070 C1/C11

2070 TS2 Mode (High Speed Serial Bus)

2070N TS1 Mode (A, B, C and D Connectors)

Custom I/O Reassignment
256 Step Internal Logic Package

Allows Written Programs Which Take Direct Control Over the I/O to Provide Customized Solutions (12 Separate Internal Logic outputs, 1-8 Solid Outputs, 9-12 Flashing Outputs)

21 Types of Logical Operations

Conditional Jump Instruction

16 Types of Test Commands

4 Timers in Seconds, 4 Timers in Tenths of Seconds

8 Counters and 8 Latches

8 Local-to-local relay bits

Various Back-up Timing Plans
Over 31 Dynamic Status Screens (Run Screens)

Main Status Screen

Coordination Timing and Status Screens

Detector Inputs and Timer Screens

Input/Output Status Screens

Time Clock Event Status Screens

Preemption Status Screens

Internal Logic Status

Volume, MOE, and Transit Priority Log Records

System Detector Inputs and Status

Platoon Progression Screens

Proactive / Split Variant Screens

Detector Simulator Screens

Other Status Screens

Miscellaneous

Menu-driven Programming Screens

Context-sensitive Help Screens

Ability to Place Calls Through the Keyboard

General Operation

Voyage Software in the 2070 Environment

Figure 1: 2070 Memory Map

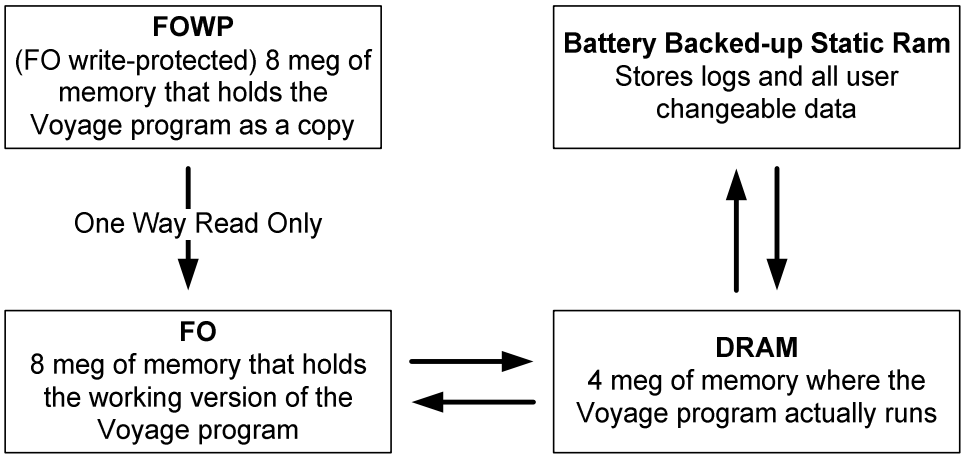

Note: The storage of logs and all user changeable data from **DRAM** to **Battery Backed-up Static Ram** occurs automatically during power down of the controller unit.

Using the Keyboard

Two keyboards are provided on the 2070 controller, a keyboard with 16 keys for alphanumeric entry and another with 12 keys used for cursor control and action symbol entry. Each key is engraved or embossed with its function character. The Voyage software is designed to comply with 2070 specifications, which requires that if two or more keys are depressed simultaneously, no code will be sent. If a key is depressed while another key is depressed, no additional code will be sent.

Figure 2: Standard 2070 Keypads

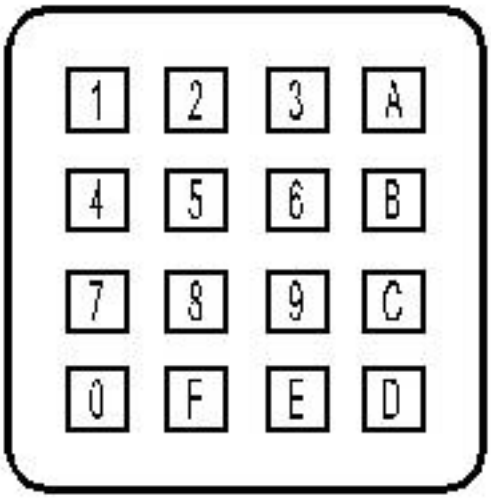

Keypad One

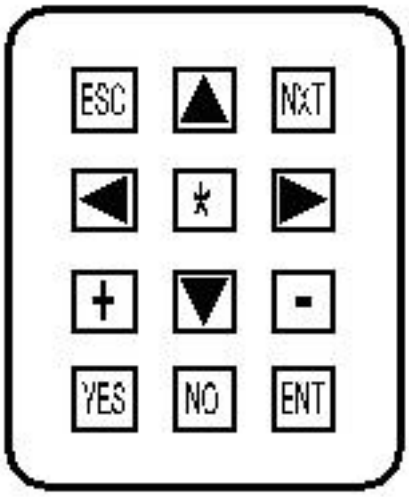

Keypad Two

The standard keys and their associated functions are as follows:

Keypad One

0 Numeric data entry key. [Off] Used for placing an “Off” command in an On/Off data entry field, for example to manually turn off a time clock circuit. Also clears all phases when assigning phases to per-phase functions (Main Menu/2/2/1). NOTE: The “NO” key also serves as an “Off” key.

1 Numeric data entry key. [On] Used for placing an “On” command in an On/Off data entry field, for example, to manually turn on a time clock circuit. NOTE: The “YES” key also serves as an “On” key.

2 Numeric data entry key. [Auto] Used for placing an “Auto” command in an On/Off/Auto data entry field, for example to allow a time clock circuit to be activated automatically.

3 Numeric data entry key.

4 Numeric data entry key.

5 Numeric data entry key.

6 Numeric data entry key.

7 Numeric data entry key.

8 Numeric data entry key.

9 Numeric data entry key. Also activates all phases when assigning phases to per-phase functions (Main Menu/2/2/1).

A [**Advance**] Used as the “Page Down” key.

B [**Back**] Used as the “Page Up” key.

C [**Clear**] Used as the “Clear” key.

D [**Do** or Special Function] Used for various purposes as instructed. For example, selecting ASCII characters for the intersection name, phone number and modem string or to activate Run Mode Hot Keys.

E [**Enter**] Used as the “Enter” key and for other purposes. **NOTE:** The “ENT” key also serves as an “Enter” key.

F [**Find**] Used as the “Help” key. Help screens are context sensitive. When the Help button is pressed, the particular Help screen which appears will be associated with the data screen currently displayed. On certain data screens, the position of the cursor will dictate the content of the Help screen.

Keypad 2

ESC [Previous Menu] Used as the “Previous Menu” key.

NEXT [Main Menu] Used as the “Main Menu” key.

✸ [Run Status] Used as the “Run Status” key. Shows the condition of all phases and overlaps, the presence of vehicle/ped demand, timers, etc.

+ [Enter w/ Data Repeat] Pressing the “+” key will enter the previous data value into the selected data location (cursor location) and will advance the cursor to the next data location. Allows rapid, repeated data entry by continuously pushing the “+” key. For example, if four seconds is desired for the Yellow times of all eight phases, go to the Phase Times program screen, move the cursor to Phase One YEL, type “4.0” and then “ENT”. Then press the “+” key seven times and the value “4.0” will be entered for

all Yellow times. **NOTE:** The “+” key may also be used for other purposes, like inserting a “No-op”, 207 instruction in Internal Logic.

- Used for various purposes, (editing time clock day programs).

YES [On] Used as the “On” key. **NOTE:** The “1” key also serves as an “On” key.

NO [Off] Used as the “Off” key. **NOTE:** The “0” key also serves as an “Off” key.

ENT [Enter] Used as the “Enter” key. **NOTE:** The “E” key also serves as an “Enter” key.

▲ ▼ ▶ ◀ The Arrows (Up, Down, Left, Right) are cursor control keys which move the cursor in the specified direction. Pressing any cursor control key will load data which has been entered or changed into the controller’s memory.

Hot Keys

Hot Keys are a customizable mode of navigating through the controller’s Run Mode screens. Hot Keys allow the user to assign up to ten commonly used Run Mode screens to numeric data entry keys (0-9). For example, to toggle back and forth between the Volume Density Status screen and the Detector Inputs and Timers screen, the former might be assigned via Hot Key programming to the “4” key and the latter assigned to the “5” key. Then a push of a button would allow for rapid switching between the screens while in any run screen, except for run screens where number keys are used.

To assign a Run Mode screen to a Hot Key, navigate through the menu to the desired Run Mode screen, hit the “D” key followed by the desired numeric data entry key (0-9) and finally the “Enter” key (ENT). To clear or unassign all Hot Keys programming, hit the “D” key followed by the “C” Key. To clear or unassign a particular Hot Key number, hit the “D” key followed by the number key and then the “C” Key.

Hot Key programming is saved through power interruptions, so reprogramming is not necessary unless changes are required. Hot key programming is NOT part of the controller database, so it will need to be manually programmed into a controller. There is a help screen associated with the Hot Key programming to remind the user what numeric keys are associated with what run screen. The Hot Key help screen can be accessed from any screen by simply pressing ‘F’ and then ‘1’. Hot Key programming will not function on a small number of Run Mode screens which use numeric data keys for the purpose of navigating through multiple screens, (i.e. the Time Clock Overrides screen).

```
                --HOT KEY HELP--
0.BASIC STATUS          1.
2.                      3.COMM STATUS
4.TRANSIT PRI           5.PREEMPTION
6.                      7.
8.COORD STATUS          9.
   See RUN MODE MENU help for hot key entry
   procedure. This is not part of the Database.
```

Calls Through the Keyboard

Keyboard Calls can be placed when viewing **any run screen**. The arrow keys are pressed first to indicate that a keyboard call is being placed. Up arrow for vehicle, right arrow for pedestrian, down arrow for preempt, or left arrow for transit priority. The number 1-8 is pressed following the arrow key to place the call on the phase vehicle 1-8, phase pedestrian 1-8, preempt 1-8, or transit priority 1-8. In addition, pressing the number 9 will place calls on ALL vehicle or pedestrian phases, when pressed after the associated arrow key.

All keyboard calls are stored in memory until the following respective results happen: phase vehicle is serviced, phase pedestrian is serviced, preempt has been committed to the sequence, or transit priority has executed 1 of 4 different results (failed – active for 255 seconds or more, override timer has expired, bus extension timed out, or coordination force-off extension has occurred).

Installation

In many cases the Voyage software will be loaded in the controller by Northwest Signal Supply. However some users may wish to have the Voyage software on their PC, and from their PC they would install the Voyage software onto their controllers.

Customer Installation of Software - The Voyage software can be loaded into a 2070 controller's flash memory from a PC by following the loading procedure below. This procedure has been verified using for both the Eagle & Econolite 2070 ATC controller which is equipped with an Ethernet port to facilitate the transmission of the program. If the controller doesn't have a 2070-1B module, contact Northwest Signal for alternative installation instructions.

Equipment needed:

- PC with HyperTerminal (com 1 or com 2 available) and DOS Command Window (Ethernet port available)
- Direct Connect cable (see Pin Out, Figure 3)
- Ethernet crossover cable (see Pin Out, Figure 4)

Files needed (obtain from NW Signal Supply):

- The Voyage program
- password & nwssenet *Note: There are separate 'nwssenet' files for the Eagle 2070 and the Econolite 2070. Make sure the correct file is installed.*

Procedure:

1. The 2070 controller should be OFF and the PC should be ON to begin.
2. Hook Direct Connect cable to PC serial port and to C50S on front of the 2070 controller.
3. Hook Ethernet cable from PC Ethernet port to C14S on back of the 2070 controller.
4. Start HyperTerminal from Start Button on Microsoft Windows Tool Bar: Start->Programs->Accessories->Communications->HyperTerminal for Windows 2000.
5. From HyperTerminal for Windows 2000 set up serial communications for appropriate PC com port: Properties->Connect to->Connect using: com 1 or com 2, 9600 baud, 8 data bits, no parity, 1 stop bit, no flow control.

6. Choose one of the following two steps (6a or 6b), depending on whether or not Voyage software is installed on the 2070 controller:

    a. **If Voyage software is not installed** on the 2070, power up the controller and a message should appear in the HyperTerminal window. Press enter and the prompt "$" should echo in the window. **NOTE**: An indication will appear on the controller indicating that Eagle Valsuite (Valsuite is a diagnostics program) is loaded or the Econolite copyright screen will be displayed.

    b. **If the Voyage software is already installed** on the 2070, power up the 2070 with the 'Backspace Key' on the PC keyboard held down. This bypasses the 'opexec' operation and enters the (Eagle Valsuite or the Econolite copyright screen) / Operating System Shell.

7. From HyperTerminal enter 'chd /f0' (this changes directories from /f0wp to /f0).

8. Enter 'dir' and look for 'nwssenet' file. **If 'nwssenet is present go to step 10.** If 'nwssenet' is not present do the following three steps (8a - 8c):

    a. From HyperTerminal enter 'Kermit r' and wait for target response.

    b. From HyperTerminal, top of screen tool bar select: Transfer->Send file-> Protocol: Kermit, browse to file in PC: nwssenet->Send.

    c. When download complete, press Enter. **If Econolite 2070 go to step 9. If Eagle 2070 go to step 10.**

9. Actions for Econolite 2070 after step 8b.

    a. From HyperTerminal enter 'chd /f0/sys' (this changes directories from /f0wp to /f0/sys). If an error occurs, enter 'makdir /f0/sys'.

    b. Enter 'dir' and look for a file called 'password'. **If this file exists, type 'chd /f0' & go to step 10, otherwise go to step 9c.**

    c. From HyperTerminal enter 'Kermit r' and wait for target response.

    d. From HyperTerminal, at the top of screen tool bar select:
    Transfer->Send file-> Protocol: Kermit,
    browse to file in PC: password->Send.

    e. When download complete, press Enter.

    f. Type 'chd /f0'.

10. Enter 'nwssenet' (this activates the Ethernet port). *Note: The Eagle 'nwssenet' is different from the Econolite 'nwssenet'. Be certain that the correct file is installed. Note: If an error message appears, "Load: can't load "spfndpd" – Error #000:216" it does not affect the installation procedure. It has to do with implementing the debug process.*

11. Type ‘chd /r2’ (changes to and initializes the /r2 drive)

12. Open DOS window.

13. From DOS window enter the following:

    a. ‘**ftp 10.1.1.122**’
    b. USER: ‘Super’
    c. PASSWORD: ‘User’
    d. ‘bin’, changes the transfer mode from ASCII to binary.
    e. ‘put’
    f. local-file ‘c:\path to Voyage software file\file name’
    g. remote-file ‘/r2/opexec’

14. (Downloading will take approximately 1-3 seconds). A prompt will appear after download. The following are responses which appear in the DOS window indicating successful transmission:

    a. XXX PORT command ok
    b. XXX Opening data connection for /r2/opexec (host pc ip,path#)
    c. XXX Transfer complete
    d. ftp: xxxxxx bytes sent in XXXSeconds XXXKbytes/sec.

15. Enter ‘bye’ to exit from ftp operation.

16. Close DOS command window.

17. Type ‘attr-e opexec’ (this makes opexec an executable file)

18. Type ‘copy opexec /f0/opexec’. This initiates the process of burning the program to flash memory which may take up to 3 minutes to complete. If message appears, ‘file already exists’, respond with ‘Y’ enter.

19. Prompt will appear on HyperTerminal when the burning of the flash PROM is complete.

20. Exit HyperTerminal.

21. Once downloading procedure is complete, power down the 2070 controller.

22. Power up the 2070 controller.

23. Check Voyage copyright screen on controller display to verify new software upgrade. To get to the appropriate screen, go to Main Menu by pressing <Next> on the controller keypad and then hit the Prior Menu key <Esc>.

Figure 3: Direct Connect Cable Pin-Out

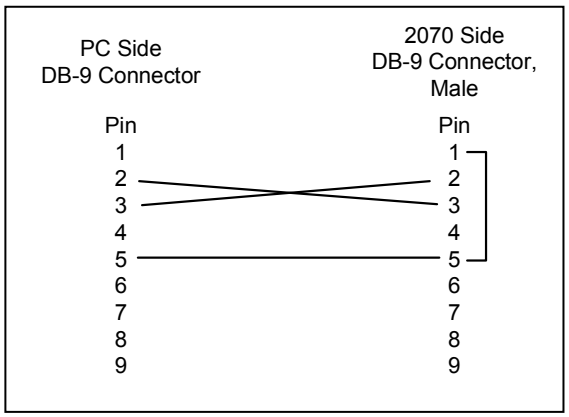

Figure 4: Ethernet Crossover Cable Pin-Out

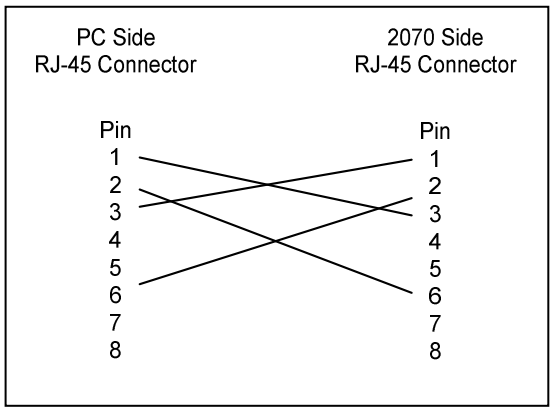

2070-TS2 Hardware Configurations

A 2070 controller in a TS2 Type 1 configuration must be ordered with a 2070-2N module. This module contains the high speed serial port, TS2 Port 1, needed for TS2 communications.

Figure 6, Rear view of 2070 controller with a 2070-2N module

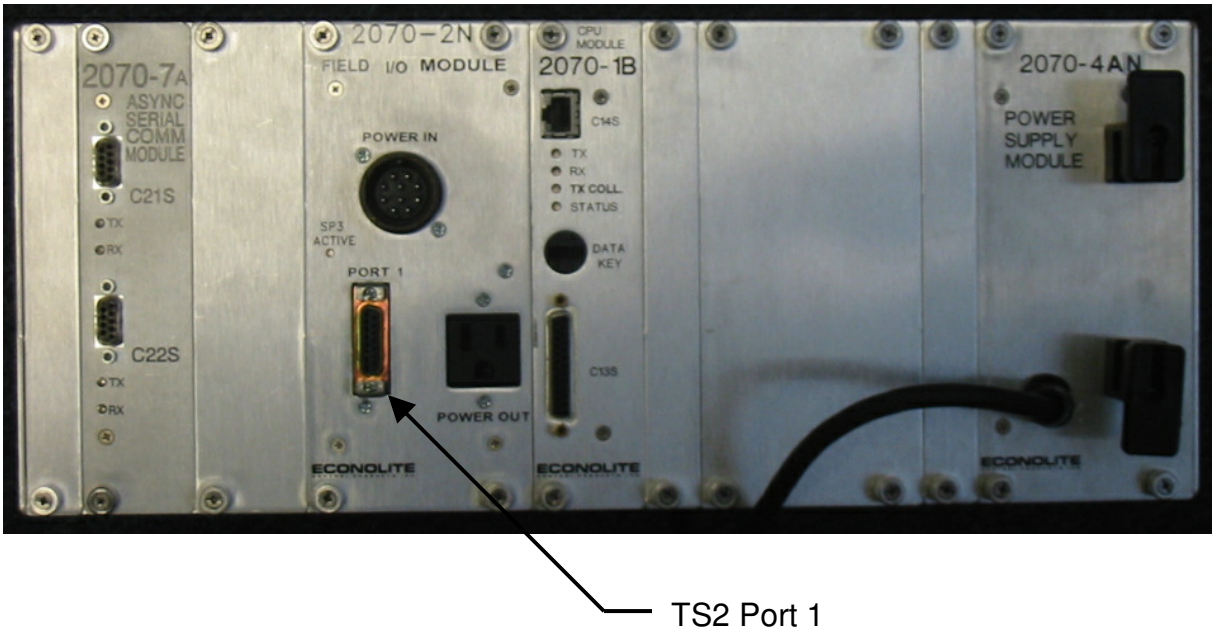

2070L Hardware Adjustments

FSK Modem Communication Module (Module 2070-6)

1. On the FSK modem module there is a HI-Z/600Ω jumper (JP1) that should be set according to the needs of the structure of the twisted-wire communication network. When selecting the HI-Z/600Ω jumper on the 2070-6 module, keep in mind that most of the locals including the master should be set to HI-Z. The farthest local from the master should be set to 600Ω. If the master is in the middle of the system, it is probable that 2 locals from the master would be set to 600Ω.

2. On the faceplate of the module, there are a series of toggle switches that should be used as follows:

    a. ON/OFF – Used to turn the module off for removal and installation of the module when the controller is energized.

    b. ENABLE/DISABLE – In the ENABLE position, the associated communication port will send and receive FSK audio signals. In the DISABLE position, the port will not send and receive FSK signals, but will operate in an RS232 mode.

    c. FULL/HALF – Use FULL if the communication network uses two twisted-wire pairs from controller-to-controller. Use HALF if only one twisted-wire pair is used (half duplex). **NOTE:** For HALF, only the audio output pins are used.

AUX Switch (Stop Time)

On the front of the 2070 controller there is a switch labeled AUX. The Voyage software has been setup so that this switch will control the Stop Time input to the controller. When the switch is up, in the ‘On’ position, Stop Time is applied. Conversely when the switch is down, in the ‘Off’ position, Stop Time is not applied.

2070L Hardware Adjustments (Specific to the Eagle 2070L)

I/O Module Switches and Jumper (Module 2070-2A)

1. On the field I/O module there is a rocker switch that will modify the operation of the SP3 (A1 UPPER) communication port. The switch is located about in the center of the circuit board. It needs to be configured as follows:

   If there is no module plugged into the A1 slot, the SP3 active select switch on the field I/O module must be set so that the SP3 active indicator on the I/O front panel will be on. This prevents the port 3 communication lines from picking up spurious signals. If there is a module plugged into the A1 slot, the SP3 active select switch on the field I/O module must be set so that the SP3 active indicator on the I/O front panel will be off.

2. On the field I/O module there is a jumper (JP3) that is normally removed so that the controller's watchdog output will be compatible with a 2010 conflict monitor. If a 210 conflict monitor will be used, the jumper must be installed. The JP3 jumper is located on the circuit board, very close to the edge connector, below the center of the board.

3. On the Field I/O module there is a rocker switch to modify the start-up operation of the default Red outputs used by a 332 cabinet. One position causes start-up with the Red outputs on & the other position causes start-up with the Red outputs dark. If the Red outputs are not used for Red, then the switch must be set for dark.

2070L Hardware Adjustments (Specific to the Econolite 2070 ATC)

I/O Module Switches and Jumper (Module 2070-2A)

1. On the field I/O module there is a slide switch that will modify the operation of the SP3 (A1 UPPER) communication port. The switch (SW1) is located behind the front panel. It needs to be configured as follows:

   If there is no module plugged into the A1 slot, the SP3 active select switch on the field I/O module must be set so that the SP3 active indicator on the I/O front panel will be on. This prevents the port 3 communication lines from picking up spurious signals. If there is a module plugged into the A1 slot, the SP3 active select switch on the field I/O module must be set so that the SP3 active indicator on the I/O front panel will be off.

2. On the field I/O module there is a jumper (WDT MUZZLE) that is normally removed so that the controller's watchdog output will be compatible with a 2010 conflict monitor. If a 210 conflict monitor will be used, the jumper must be installed. The WDT MUZZLE jumper is located on the circuit board, very close to the edge connector, above the center of the board.

TS2 Cabinet Configurations

Figure 1, Photo of TS2 Type 1 Cabinet

The Voyage software will function properly in a TS2 Type 1 cabinet. The photo on the left is of a typical TS2 Type 1 cabinet. It contains a 2070 controller unit (CU), a malfunction management unit (MMU), a bus interface unit (BIU) in the detection rack, and two BIU's in the back panel. The back panel is referred to as the Terminals and Facilities (TF) in the TS2 standard. BIU's are used to convert serial communications from the 2070 into 24V, ground true logic and visa versa.

Figure 2, Drawing of TS2 Type 1 Cabinet

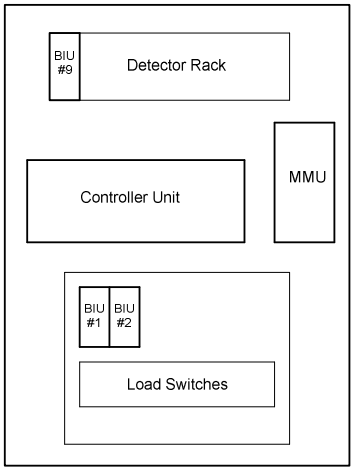

The drawing to the left is a simplified view of the cabinet photo above. It shows the relative positions of the CU, the MMU and the BIU's. If the cabinet were larger, say with more detector amplifiers and more load switches, it would be necessary to add more BIU's to the design. The maximum number of BIU's that the Voyage software will support in a detector rack is four, providing a maximum of 32 channels of detection. The maximum number of BIU's that the Voyage software will support in a back panel is four, which will support up to 16 load switches and other inputs and outputs.

Figure 3, Serial Bus in a TS2 Type 1 Cabinet

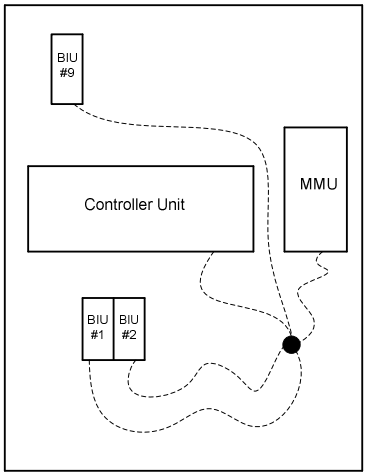

The diagram to the left shows how the high speed serial communications are terminated in a "party line" type configuration. The CU initiates all communications by issuing commands on a regular basis. The other devices issue responses only to particular types of commands. For example, the CU issues a command requesting status from the MMU every 1/10th of a second. If the MMU fails to reply more than 5 times in the last 10 commands the intersection will go into flash.

This page left intentionally blank.

Run Mode

Introduction

The Voyage Software uses a menu-driven display format for data entry and status information. The menu lists a number of choices from a group of major categories. Select a desired category by pressing the corresponding key. There may be a sub-menu listing more choices. Continue the selection process until a specific topic appears.

Standard Displays

The Basic Status Run Mode display (see page 30) is the initial display which appears after the controller is turned on.

Select **NEXT** key to go to the Main Menu

```
--MAIN MENU--

1.RUN MODE        3.UTILITIES

2.PROGRAM MODE

-- AUX Switch ON = Stop Time --
--USE F KEY FOR HELP--
```

This is how the Main Menu appears when the controller is loaded with default data or when the controller is not programmed to run in a TS2 cabinet. A fourth menu selection, TS2 Port 1 Status, becomes visible when TS2 communications are enabled in the controller (specifically, when the Bus Interface Unit (BIU) or MMU assignments are completed and the controller is restarted). See the chapter on Program Mode Screens for more information. Assuming that the BIU's are assigned, the Main Menu will look like this:

```
--MAIN MENU--

1.RUN MODE          3. UTILITIES

2.PROGRAM MODE      4. TS2 PORT 1 STATUS

-- AUX Switch ON = Stop Time --
--USE F KEY FOR HELP--
```

Select **ESC** key to go to the copyright display

```
NEMAATC PGM:   IDTS2 v.02.01.00     16Nov2006

        NORTHWEST SIGNAL SUPPLY, INC.

    COPYRIGHT 2006, ALL RIGHTS RESERVED

INTERSECTION:
16TH STREET SW AND 212TH AVE
```

Press **'F'** from this screen to see a series of text screens that show the changes in the latest version. Continuing to advance will show the major changes in each version of Voyage going all the way back to 01.00.00.

The **MAIN MENU** display lists the three major display sections:

The **RUN MODE** section provides real time status displays of controller operation, active phases and intervals, timers timing, vehicle actuation status, etc.

The **PROGRAM MODE** section provides access to data entry of all programmable functions within the unit. A security code may be loaded to prohibit data entry to unauthorized personnel.

The **UTILITIES** section data management and special functions including load backup timing, clear database load, controller restart, copy functions and intersection naming.

(The display backlight automatically turns on when the controller keypad is pressed. After five minutes of keyboard inactivity the backlight will automatically turn off).

The **RUN MODE** section is used to observe the real time status of the controller unit. There are a variety of **RUN MODE** display screens to observe timing status, operational status, and input/output status.

RUN MODE displays begin with the **MAIN MENU** display screen.

```
                --MAIN MENU--

    1.RUN MODE          3. UTILITIES

    2.PROGRAM MODE      4. TS2 PORT 1 STATUS

       -- AUX Switch ON = Stop Time --
          --USE F KEY FOR HELP--
```

Select 1. **RUN MODE**

```
--RUN MODE MENU--

1.CONTROLLER      6.INTERNAL LOGIC
2.FAULTS          7.COMM STATUS
3.TIME CLOCK      8.VOL/MOE/SCHEDULE/
4.PREEMPTION        TRANSIT LOG
5.TRANSIT PRI     9.CONNECTOR I/O
                  0. SYSTEM
```

There are ten primary Run Mode options. The tenth, “Local Comm/Relays” or “System”, is only visible if the controller is intended to run as a master controller and is in System Mode “1” or “2” repectively (see communications setup).

Controller Run Menu

This menu shows the ten Controller Run Menu options

Select 1. **CONTROLLER** to display the **CONTROLLER RUN MENU**.

```
--CONTROLLER RUN MENU--

1.BASIC STATUS        6.RING/UNIT I/O,
2.COORD TIMING/DYN      DETECTORS
  PH LEN/PLATOON      7.PHASE SERVICE
3.COORD STATUS        8.OVERLAPS/FYLTA
4.VOLUME DENSITY      9.SERVICE PLAN MODE
5.PHASE I/O           0.DETECTOR SIMULATOR
```

BASIC STATUS RUN MODE DISPLAY

Select 1. **BASIC STATUS**

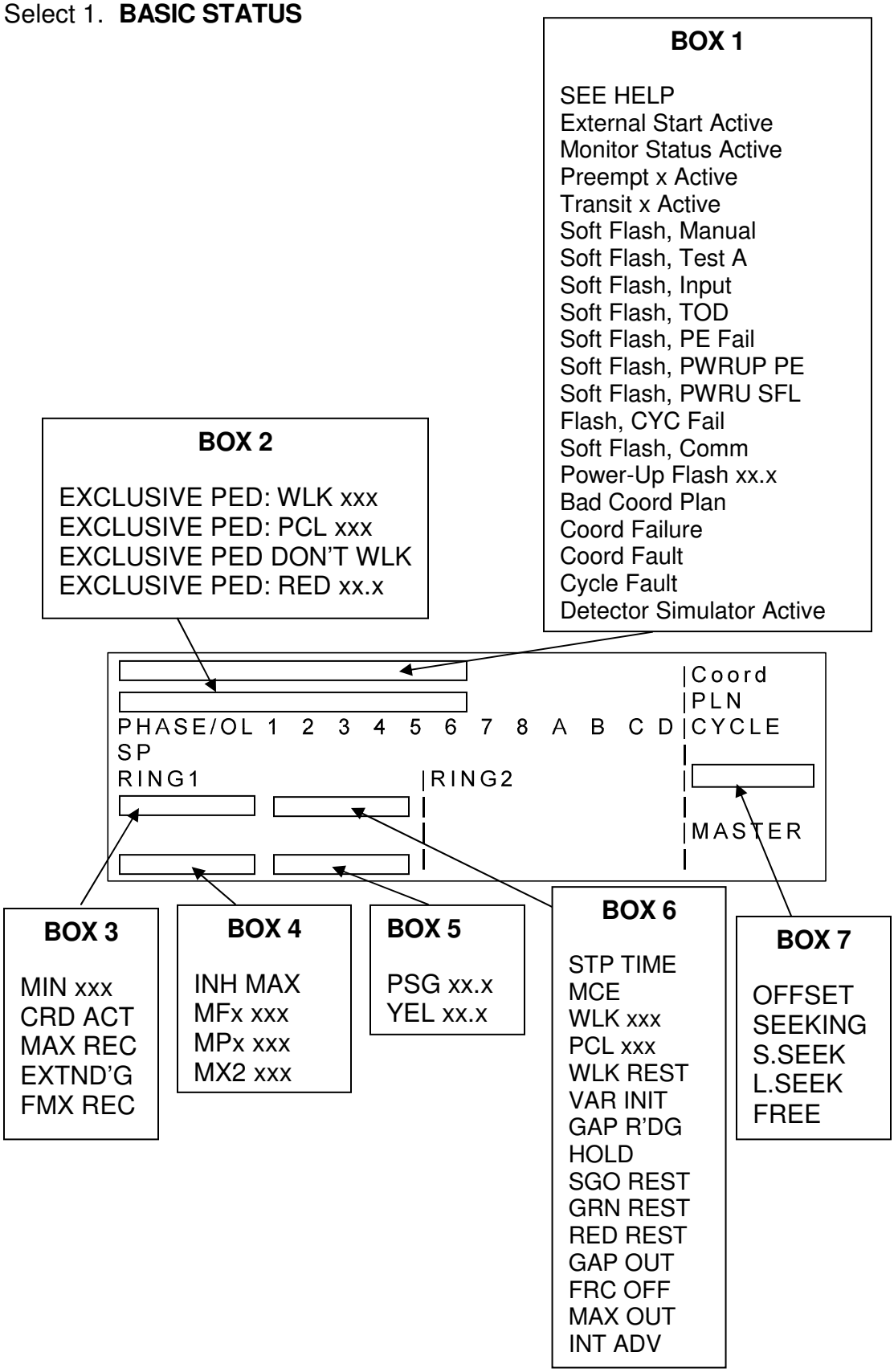

COORD PLN – This is the coordination plan in effect. If the coordinator is in free operation, the coord plan is not displayed.

CYCLE TIMER – This is the local cycle timer in seconds. The cycle determines the actions of the phase and pedestrian omits along with force-offs.

SPx – Service plan in effect x = 0-8. If zero, normal timing parameters are used.

PHASE/OL – Phases 1-8, overlap A, B, C, and D. A comma in front of phase 1-8 represents a vehicle actuation. A decimal in front of phase 1-8 represents a pedestrian call. Both rows of this display are interactive. The phases shown will only be those phases that are programmed as 'Phases Used'. The overlaps A-D will only be shown if they are programmed to be used.

Below each phase, any of the following may appear:

r = Red (while this phase is not in service)
R = Red Clearance (of phase)
Y = Yellow
W = Walk
D = Flashing Don't Walk
G = Green
N = This Phase Next

MASTER PLAN and TIMER – The master plan is in effect and the master cycle timer is in seconds.

BOX 1 – The following are text descriptions for box 1.

SEE HELP – Deals with problems encountered by the controller. Description of the problems will be found under the following keystrokes: MAIN MENU(NEXT)->1.RUN MODE->2.FAULTS.

CHECKSUM FAILURES: CONTROLLER SECTION, COORDINATION SECTION, TIME CLOCK SECTION, PREEMPTION SECTION, MISCELLANEOUS SECTION, COMM SECTION, CHECKSUM LATCH = Checksum failure detected, after the sections cleared, controller must be restarted by keyboard restart (under UTILITIES main menu item) or cycling power off/on.

START-UP FAILURES: Programmed Phase Not Used, Programmed Phases Incompatible, Programmed Phase In Wrong Ring, Programmed Phase > Than 8, No Phases Programmed, I/O Failure (no I/O module seen or database connector type) MAIN MENU (NEXT)->2.PROGRAM MODE->8.I/O CONFIG->1.INPUT: CONN (not compatibile with I/O module installed).

CONTROLLED FLASH entry or exit error: Programmed Phase Not Used, Programmed Phases Incompatible, Programmed Phase In Wrong Ring, Programmed Phase > Than 8, No Phases Programmed.

External Start Active – The functional input is active.

Monitor Status Active – The functional input is active.

Preempt x Active – Preempt x is active where x = 1-8.

Transit x Active – Transit Priority x is active where x = 1-8

Soft Flash, Manual – Under coordination modes for flash, the entry is "ON."

Soft Flash, Test A – The functional input Test A is active. Test A is a fixed function which calls for controlled flash.

Soft Flash, Input – This input can call for flash if the flash entry under coordination modes is set for hardwire (35).

Soft Flash, TOD – The time clock can call for controlled flash if the flash entry under coordination modes is set for time clock (33).

Soft Flash, PE Fail – The controller will go to controlled flash if a preempt input is active for a period greater than or equal to the fail time programmed for the preempt input under preemption exit modes.

Soft Flash, PWRUP PE – If the controller attempts to exit flash with a preempt active, the controller will remain in flash until the preempt input becomes inactive. The unit will then go through start-up initialization.

Soft Flash, PWRU SFL– If the controller attempts to exit flash with a flash command active, the controller will then remain in flash until the flash command becomes inactive. The unit will go through start-up initialization.

Flash, CYC Fail – If a phase is not serviced that has a serviceable call for a period of twice the largest of the max time from barrier to barrier, then the controller will cause the intersection to go immediately into flashing operation. The only way to exit this condition is to change the database or retart the controller through the keyboard restart or cycling power off/on. The controller will then go through the initialization sequence.

Soft Flash, Comm – The communications from the master calls for controlled flash if the flash entry under coordination modes is set for (34).

Power-Up Flash xx.x – If a non-zero value is entered for 'Power-Up Flash', upon power-up the intersection will remain in flash for that period of time. After this period, the controller will go through start-up initialization.

Bad Coord Plan – The coordinator is attempting to run, but a problem is detected with the coordination plan. Possible problems include: no coord phases or unused coord phases programmed, incompatibile coord phases programmed, no cycle length or no force-off points.

Coord Failure – The coordinator goes through coord fault and cycle fault followed by not serving a phase for two cycle lengths which is not omitted by inputs, service plan, time clock or Internal Logic.

Coord Fault – After a cycle fault and a "no cycling failure" is detected, the coordinator will attempt to run again.

Cycle Fault – The coordinator does not serve a phase for two cycle lengths which are not omitted by inputs, service plan, time clock, or internal logic, the coordinator will go to free operation and check for a cycling failure. The Cycle Fault timer is reset by external start, stop time, MCE, any input holds, an active programmed flash, an active preempt, a monitor status or an active transit priority.

Detector Simulator Active – The detector simulator is enabled and is placing vehicle detector calls.

BOX 2 – When the exclusive pedestrian time clock circuit #62 is active and the quad left turn sequence is running the following text will be displayed in box 2.

EXCLUSIVE PED: WLK xxx – The walk timing of the exclusive pedestrian

EXCLUSIVE PED: PCL xxx – The pedestrian clearance timing of the exclusive pedestrian

EXCLUSIVE PED: RED x.x – The fixed 3.0 seconds of Red Clearance timing of the exclusive pedestrian

EXCLUSIVE PED DON'T WLK – When neither the walk nor pedestrian clearance is being timed.

BOX 3 – This is the description for ring timing/status for the upper left quadrant.

MIN xxx – This is the minimum green timing in seconds.

CRD ACT – When the coordinator is running and rest-in-walk is active.

MAX REC – When max recall on the phase is active.

EXTND'G – When the phase green is being extended

FMX REC – When failed detector max recall on the phase is active.

BOX 4 - This is the description for ring timing/status for the lower left quadrant.

INH MAX – When the phase is green and the inhibit max termination function is active for the phase

MFx xxx – When a max plan is in effect and a failed detector is applying recall to the phase. The timer is in seconds.

MPx xxx – When a max plan is in effect. The timer is in seconds.

MX2 xxx – When max 2 is in effect. The timer is in seconds

MX1 xxx – This is the default max green time to be used. The timer is in seconds.

BOX 5 – This is the description for ring timing/status for the lower right quadrant.

PSG xx.x – This is the passage timer in tenths of seconds.

YEL xx.x – This is the yellow change timer in tenths of seconds.

RED xx.x – This is the red clearance timer in 10th of seconds. Timer may time in seconds if RED DEC OFF programming is enabled MAIN MENU (NEXT)->2.PROGRAM MODE->2.CONTROLLER->1.RED DEC OFF.

BOX 6 – This is the description for ring timing/status for upper right quadrant.

STP TIME – Stop timing is applied to the ring.

MCE – When manual control enable is applied to the controller.

WLK xxx – This is the walk timing in seconds.

PCL xxx – This is the flashing don't walk or pedestrian clearance timing in seconds.

WLK REST – This is when the walk timing has finished and the phase is resting in walk.

VAR INIT – When the minimum green timer is running and added initial is in effect.

GAP R'DG – When the passage timer is running and gap reducing is in effect.

HOLD – When hold is applied to the phase.

SGO REST – When inhibit simultaneous gap-out is enabled for the phase and the passage timer has timed out.

GRN REST – When the passage and minimum green timers have timed out and no serviceable conflicting calls are present.

RED REST – When the ring has no phase active or the phase is timing yellow because red rest is active and no serviceable conflicting calls are present.

GAP OUT – When the phase is timing yellow and the phase went to yellow by the passage timer timing out.

FRC OFF – When the phase is timing yellow and phase went to yellow by being forced-out of green.

MAX OUT – When the phase is timing yellow and the phase went to the yellow by the max green timer timing out.

INT ADV – When the phase is timing yellow and the phase went to the yellow by interval advance.

CND SERV – When a conditionally serviced or re-serviced phase is green.

BOX 7 – This is the description of the offset actions during the cycle.

OFFSET – The offset time between the local cycle timer and the master cycle timer has been obtained and the coordinator is considered in sync.

SEEKING – The dwell mode is in effect as a means of offset seeking, but the offset time has not been obtained.

S.SEEK – The fastway mode is in effect as a means of offset seeking, but the offset has not been obtained, therefore the local cycle is being shortened by 20% to obtain the programmed offset.

L.SEEK – The add only or fastway mode is in effect as a means of offset seeking, but the offset has not been obtained, therefore the local cycle is being lengthened by 40% to obtain the programmed offset.

FREE – The coordinator has been called to free operation. The means for free operation can be seen on the coordination screens.
OFFSET TIMER – Below box 7 is the actual offset between the local cycle timer and the master cycle timer in seconds.

COORDINATION TIMING MODE DISPLAY

This display is used to see the phase indications, coord timers and the application of Omit, Hold & Force-off.

Select 2. **COORD TIMING**

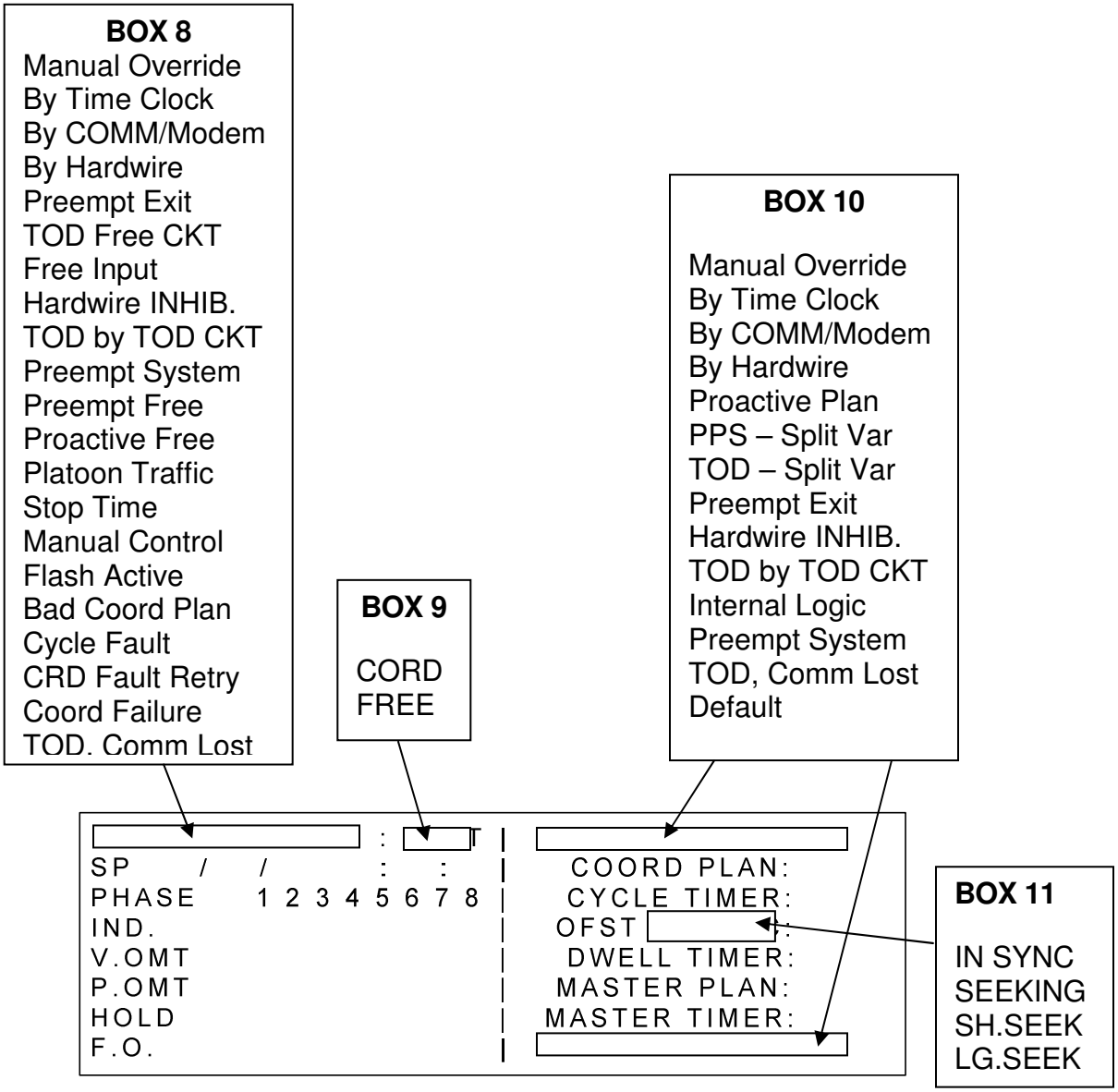

SPx – Service plan in effect x = 0-8. If zero, normal timing parameters are used.

DATE – mm/dd/yy; mm = month of year, dd = day of month and yy = year.

TIME – hh:mm:ss; hh = hour, mm = minute and ss = second.

COORD PLAN – This is the selected coord plan.

CYCLE TIMER - This is the local cycle timer in seconds. The cycle determines the actions of the phase and pedestrian omits along with force-offs.

PHASE - Phases 1-8. A comma in front of phase 1-8 represents a vehicle actuation. A decimal in front of phase 1-8 represents a pedestrian call. Both rows of this display are interactive. The phases shown will only be those phases that are programmed as 'Phases Used'.

Below each phase, any of the following may appear:

r = Red (while this phase is not in service)
R = Red Clearance (of phase)
Y = Yellow
W = Walk
D = Flashing Don't Walk
G = Green
N = This Phase Next

V.OMT – The vehicle omits being applied to phases 1-8 by the coordinator.

DWELL TIMER – When the dwell mode of offset seeking is being used, this timer will remain at the full dwell value until the max cycle length is reached. Then, the dwell timer will time toward zero while holding the cycle timer at the full cycle length. If the offset time to the master cycle is met, the cycle timer will be reset and the offset will be obtained and sync established. If the offset has not been met, when the dwell timer reaches zero, the cycle timer will be reset.

P.OMT – The pedestrian omits being applied to phases 1-8 by the coordinator.

MASTER PLAN – The master plan in use will determine the master timer value.

MASTER TIMER - The master cycle timer will be displayed. The master timer counts up to the programmed cycle length then is reset to zero.

HOLD – The holds being applied to phases 1-8 by the coordinator.

F.O. – The force-off's being applied to phases 1-8 by the coordinator.

BOX 8 – This box describes the cause for the coordinator to run or be in free operation.

Manual Override – CRD PLAN values of 0 = free or 1-32 = coordination plan 1-32 in effect; coordination plan selected by keyboard entry. MAIN MENU (NEXT)->2.PROGRAM MODE->3.COORDINATION->1.COORDINATION MODES.

By Time Clock– CRD PLAN value of 33. Coordination plan selected by time clock scheduler or TOD circuit overrides. MAIN MENU(NEXT)->2.PROGRAM MODE->3.COORDINATION->1.COORDINATION MODES.

By COMM/Modem – CRD PLAN value of 34. Coordination plan selected by communication interface, master controller. MAIN MENU(NEXT)->2.PROGRAM MODE->3.COORDINATION->1.COORDINATION MODES.

By Hardwire – CRD PLAN value of 35. Coordination plan selected by the five hardwire inputs (Coord Lines 1, 2, 4, 8 & 16). MAIN MENU(NEXT)->2.PROGRAM MODE->3.COORDINATION->1.COORDINATION MODES.

Preempt Exit – If coordinator is running, the preempt coordination plan was selected for a fixed time period after the preemption has exited. If coordinator is FREE, FREE was selected for a fixed time period after preemption has exited. MAIN MENU(NEXT)->2.PROGRAM MODE->5.PREEMPTION->0.HI PE SETUP->5.EXIT MODES.

TOD Free CKT – The coordinator is set free no matter what is normally controlling the coordination plan, TOD circuit 16.

Free Input – If the input function known as free operation (code 126) is active.

Hardwire INHIB. – If the CRD PLAN has a value of 35 and the input function known as hardwire control is active, then the control reverts to TOD.

TOD by TOD CKT – This causes control to revert to TOD if the TOD circuit 63 is active and CRD PLAN values are 34 (communications, master) or 35 (hardwire).

Preempt System – This is active if the preemptor is running and a preempt sequence is allowing coordination to run on a limited basis. The preempt sequence instruction is 96.

Preempt Free – Preemption is active and preempt coordination is not allowed.

Stop Time – Stop time input is active.

Manual Control – Manual control enable (MCE) input is active.

Flash Active – Flash command is in effect.

Bad Coord Plan – The coordinator is trying to run, but a bad coord plan has been detected. Bad coordination plans include: no cycle length, no coord plans or no force-off points.

Cycle Fault – This is the first time a serviceable phase has not been satisfied for two cycle lengths.

CRD Fault Retry – After detecting that the phase can be serviced in free operation, the coordinator tries to run again.

Coord Failure – After the second time the coordinator fails to service a serviceable phase, the coordinator will go to free operation and not run again until the database has been changed or power has been cycled off/on.

TOD, Comm Lost – If the controller does not receive the coordination plan, set time communications or if the CRD PLAN value is 34 (comm.) for a period of 255 seconds, the coordinator will revert to TOD control.

Proactive Free – The controller is Free because the master, in Proactive Plan Selection mode, has fallen below its Free threshold.

BOX 9 – This indicates if the coordinator is FREE or running CORD (coordinated). When the controller is in Platoon Progression this display is blank.

BOX 10 – This box describes the cause for the coordinator running a particular coordination plan.

Manual Override – CRD PLAN values of 1-32 = coordination plan 1-32 in effect; coordination plan selected by keyboard entry. MAIN MENU(NEXT)->2.PROGRAM MODE->3.COORDINATION->1.COORDINATION MODES.

By Time Clock – CRD PLAN value of 33. Coordination plan selected by time clock scheduler or TOD circuit overrides. MAIN MENU(NEXT)-

>2.PROGRAM MODE->3.COORDINATION->1.COORDINATION MODES.

By COMM/Modem – CRD PLAN value of 34. Coordination plan selected by communication interface, master controller. MAIN MENU(NEXT)->2.PROGRAM MODE->3.COORDINATION->1.COORDINATION MODES.

By Hardwire – CRD PLAN value of 35. Coordination plan selected by the five hardwire inputs. MAIN MENU(NEXT)->2.PROGRAM MODE->3.COORDINATION->1.COORDINATION MODES.

Preempt Exit – If coordinator is running, preempt coordination plan selected with timer running after preemption has exited. MAIN MENU (NEXT)->2.PROGRAM MODE->5.PREEMPTION->0.HI PE SETUP->5.EXIT MODES.

Hardwire INHIB. – If the CRD PLAN has a value of 35 and the input function known as hardwire control is active, then the control reverts to TOD.

TOD by TOD CKT – This causes control to revert to TOD if the TOD circuit 63 is active and CRD PLAN values are 34 (communications, master) or 35 (hardwire).

Internal Logic – When the internal logic calls for a coord plan to be in effect, instruction 214.

Preempt System – This is active if the preemptor is running and a preempt sequence is allowing coordination to run on a limited basis. The preempt sequence instruction is 96.

TOD, Comm Lost – If the controller does not receive the coordination plan, set time communications or if the CRD PLAN value is 34 (comm.) for a period of 255 seconds, the coordinator will revert to TOD control.

Default – When CRD PLAN has value of zero (free), the default coord plan being used is one.

Platoon Traffic – The master and local are running Platoon Progression coordination. The entry intersection has calculated a cycle length which has been transmitted from the master to the local.

Proactive Plan – The master and the local are running Proactive Plan Selection. The local is running the coord plan selected by the master.

PPS-Split Var – The master and the local are running both Proactive Plan Selection and Split Variant Operation. The local is running the coord plan selected by the master.

TOD-Split Var – The master and the local are running Split Variant Operation. The local is running the coord plan selected by the master.

BOX 11 – The following describes the offset seeking modes being used.

OFST IN SYNC – The offset time between the local cycle timer and the master cycle timer has been obtained and the coordinator is considered in sync.

OFST SEEKING – The dwell mode is in effect as a means of offset seeking, but the offset time has not been obtained.

OFST SH.SEEK – The fastway mode is in effect as a means of offset seeking, but the offset has not been obtained, therefore the local cycle is being shortened by 20% to obtain the programmed offset.

OFST LG.SEEK – The add only or fastway mode is in effect as a means of offset seeking, but the offset has not been obtained, therefore the local cycle is being lengthened by 40% to obtain the programmed offset.

COORD STATUS MODE DISPLAY

This display is used coord plan information from most sources.

Select 3. **COORD STATUS**

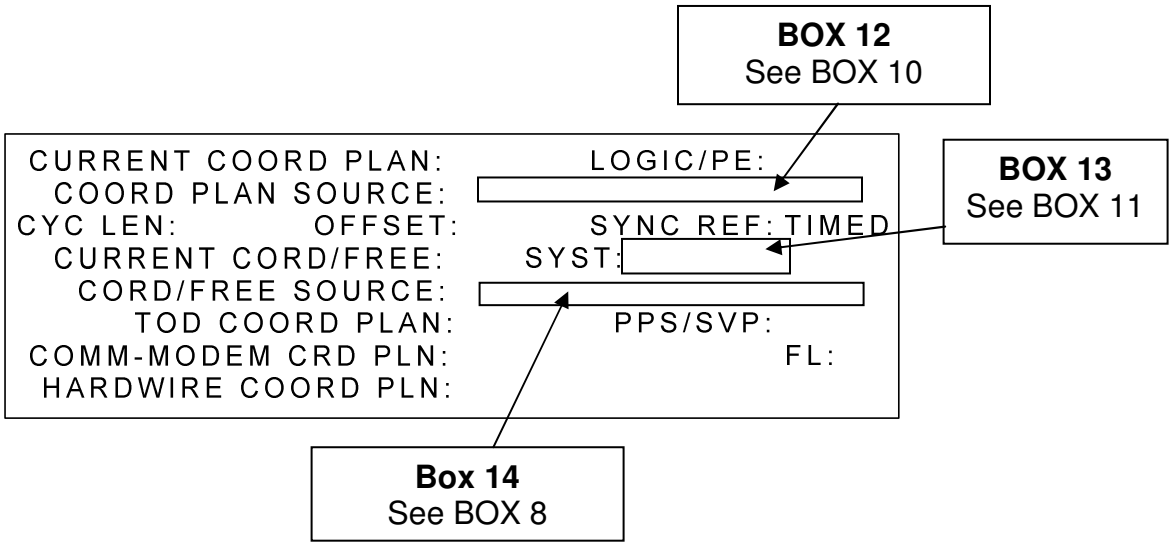

CURRENT COORD PLAN – Coord plan in effect

LOGIC/PE – Internal logic coord plan selected/preempt coord plan selected.

CYC LEN – Cycle length in use.

OFFSET – Offset time in use.

SYNC REF-TIMED – Based on database set time or TOD scheduler coord plan event. MAIN MENU(NEXT)->2.PROGRAM MODE->4.TIME CLOCK->5.SYNC REF. Under reference is reference time hh:mm; hh = hours and mm = minutes.

CURRENT CORD/FREE – This indicates if the coordinator is in FREE or running CORD. When the controller is in Platoon Progression this display is blank.

TOD COORD PLAN – The coordination plan being selected by the time clock.

COMM-MODEM COORD PLAN – The coordination plan being selected by the communications (master).

FL – The flash command being selected by the communications (master).

HARDWIRE COORD PLAN – The coordination plan being selected by the hardwire inputs.

BOX 12 – This box describes the cause for the coordinator to be running a particular coordination plan. See Box 10 “Coordination Timing Mode Display”.

BOX 13 – The following describes the offset seeking modes being used. See Box 11 “Coordination Timing Mode Display”.

BOX 14 – This box describes the causes for the coordinator running or be in free operation. See Box 8 “Coordination Timing Mode Display”.

VOLUME DENSITY STATUS DISPLAY

Select 4. **VOLUME DENSITY**

```
          --VOLUME DENSITY STATUS--
PHASE        INIT      |    PHASE     INIT
                       |
MAX          TBR       |    MAX       TBR
                       |
TTR          PSG       |    TTR       PSG

[                      ]
```

BOX 15

PED TIMNG
MAX REC
CURRENT GAP
FMX REC

PHASE – Phase active. **NOTE:** Left side of screen Ring 1 and right side of screen Ring 2.

INIT – Minimum green timer. A **V** in front of **INIT** shows Variable initial is in effect.

MAX – The max timer.

TBR –Time before reduction timer.

TTR –Time to reduce timer.

PSG – Passage timer.

BOX 15 – This is the mode of operation for the active phase.

> **PED TIMNG** – Walk or flashing Don't Walk (pedestrian clearance) is timing.
>
> **MAX REC** – Max recall is in effect for the active phase.
>
> **CURRENT GAP xx.x** – This is the current gap being used for the passage timer. It will change based on the gap reduction parameters.
>
> **FMX REC** – When failed detector max recall on the phase is active.

PHASE I/O STATUS DISPLAY

Select 5. for **PHASE INPUTS**

```
                --PHASE INPUTS--
PH 1  2  3  4  5  6  7  8 | PH 1  2  3  4  5  6  7  8
IND                       | VOM
                          |
VEH                       | POM
                          |
PED                       | HLD
```

IND (Indication) – Below each phase, any of the following may appear:

- **r** = Red (while this phase is not in service)
- **R** = Red Clearance (of phase)
- **Y** = Yellow
- **W** = Walk
- **D** = Flashing Don't Walk
- **G** = Green
- **N** = This Phase Next

VOM (Vehicle omit) – Below each phase, an **X** indicates phase omit is active.

VEH (Vehicle call) – Below each phase the following indications are listed:

- **M** – Call stored in memory
- **R** – Phase recalled
- **X** – Phase detector active

POM (Pedestrian omit) – Below each phase, an **X** indicates phase omit is active.

PED (Ped call) – Below each phase the following indications are listed:

- **M** – Call stored in memory
- **R** – Phase pedestrian recalled
- **X** – Phase pedestrian detector active

HLD (Hold) – Below each phase, an **X** indicates phase hold is active.

Select A. for **Phase Outputs**

```
                --PHASE OUTPUTS--
PH 1  2  3  4  5  6  7  8 | PH 1  2  3  4  5  6  7  8
IND                       | CHK
RED                       | DW
YEL                       | PCL
GRN                       | WLK
ON                        |
NXT                       |
```

IND (Indication) – Below each phase, any of the following may appear:

r = Red (while this phase is not in service)
R = Red Clearance (of phase)
Y = Yellow
W = Walk
D = Flashing Don't Walk
G = Green
N = This Phase Next

RED (Phase red) – Below each phase, an **X** indicates phase check is active.

YEL (Phase yellow) – Below each phase, an **X** indicates phase yellow is active.

GRN (Phase green) – Below each phase, an **X** indicates phase green is active.

ON (Phase on) – Below each phase, an **X** indicates phase on is active.

NXT (Phase next) – Below each phase, an **X** indicates phase next is active.

CHK (Phase check) – Below each phase, an **X** indicates phase check is active.

DW (Phase don't walk) – Below each phase, an **X** indicates phase don't walk is active.

PCL (Phase pedestrian clearance) – Below each phase, an **X** indicates phase pedestrian clearance is active.

WLK (Phase walk) – Below each phase, an **X** indicates phase walk is active.

Select 6. for **Ring Unit I/O Inputs**

```
FUNCT PH IND  |MX2  FRC ST  IMX RRM PDR ORC
RING1         |
RING2         |
INTVL R1:                | INTVL R2:
          --CODED STATUS BIT DISPLAY--
BIT     A  B  C |STATE   |PH |IND |MODE |INTERVL
RING1           |        |   |    |     |
RING2           |        |   |    |     |
```

PH (Phase) – Phase active in each ring.

IND (Indication) – The following will indicate active interval per ring:

R = Red Clearance (of phase)
Y = Yellow
W = Walk
D = Flashing Don't Walk
G = Green

MX2 (Max 2), **FRC** (Force-off), **ST** (Stop time), **IMX** (Inhibit max termination), **RRM** (Red rest modifier), **PDR** (Pedestrian recycle), **ORC** (Omit red clearance) Below any of these an **X** will indicate an active ring modifier.

INTVL R1 and INTVL R2 – The following timers will be displayed:

RED xx.x – The red clearance timer in tenths of seconds. If the RED DEC. OFF enable is active for the phase, the timer will then be displayed in seconds.

YEL xx.x – The yellow change timer in seconds.

MIN xxx – The minimum green timer in seconds.

MFx (Max fail timer if max plan active and phase recalled max enabled, **x** = max plan), **MPx** (Max plan active, **x** = max plan), **MX2** (Max 2 called for), **MX1** (Max 1 used, default with timer displayed in seconds).

WLK xxx – The walk timer in seconds.

PCL xxx – The pedestrian clearance (flashing Don't Walk) timer in seconds.

CODED STATUS BITS

ABC – If an **X** appears under the **A**, **B**, or **C** that status output is active

Note: A key for decoding the various patterns is in Run Mode-Input/Output Configuration.

STATE – The following text depends on the **ABC** pattern activity.

WLK – Walk timing, coordinated rest-in-walk active.

WLK H – Walk hold, coordinated rest-in-walk active.

PCL – Pedestrian clearance timing, coordinated rest-in-walk active.

MIN – Minimum timing for phases that are not coordinated rest-in-walk.

EXT – Extension timing for phases that are not coordinated rest-in-walk.

MAX H – Minimum timing for phases which are not coordinated rest-in-walk.

GRN R – The phase is in green rest.

YEL – The yellow change interval is timing.

RED –The red clearance interval is timing.

RED R – The ring is in red rest.

PE SP – A preempt special interval is active.

MODE – **CWR**=Coordination walk rest and **ACT**=Actuated.

INTERVL – Same as **INTVL R1** and **INTVL R2.**

Select A. for **Unit I/O**

```
--PER UNIT:   INPUT STATUS---   OUTPT STATUS
 INT|MCE|EXT|     |     |MIN |TST|FLO|     |
ADV|     |ST  |     |     |REC|ABC|     |     |
    |     |    |     |     |     |     |     |     |WDOG
MONITOR STATUS:
 I|IOM|CLK|HWR|SFL|DOR|ALARM|CRD LINE:
C|ABC|RES|INH |     |OPN |12345 | IN:
 |    |     |     |     |     |       |OUT:
```

An **X** indicates that the per unit input/output is active.

INT ADV (Interval advance input) – Advances the phase interval when the input goes inactive.

MCE (Manual control enable input) – When active, the interval advance input is allowed to advance the phase interval through non-clearance intervals.

EXT ST (External start input) – When active, the controller sequence will go to the power-up initialization state.

MIN REC (Minimum recall input) – When active, will call the phase if not green.

TST ABC (Test A/B/C inputs) – When **Test A** is active, the flash command is executed using the flash entry and exit phases. **Test B** and **Test C** are not functionally used at this time.

FLO (Flashing logic output) – This flashes at a rate of 60 flashes/minute with a 50% duty cycle.

WDOG (Watchdog output) – When active, the watchdog output will flash at a rate of 5 Hz with a 50% duty cycle.

MONITOR STATUS – When this input goes from active to inactive, the controller will go through its power-up initialization sequence.

IC (Indicator control) – This input is not currently functional.

IOM ABC (Input/output mode **A**/**B**/**C**) – These I/O mode inputs are not used.

CLK RES (Clock reset input) – When this input goes inactive, the time clock time will be reset to the database value entered at MAIN MENU (NEXT)->2.PROGRAM MODE->4.TIME CLOCK->RES. TIM.

HWR INH (Hardwire inhibit input) – When active will cause the time clock coordination plan to be used if the CRD PLAN is set to 35 (hardwire) at MAIN MENU (NEXT)->2.PROGRAM MODE->3.COORDINATION->1.COORDINATION MODES.

SFL (Soft flash input) – When active and the FLASH entry is set to 35 (hardwire) at MAIN MENU (NEXT)->2.PROGRAM MODE->3.COORDINATION->COORDINATION MODES, a flash command is received.

CAB OPN (Cabinet door open input) – When changing states and the input is active/door closed or input is not active/door open by a mechanism tied to the door, the door is logged to a specified schedule log, MAIN MENU (NEXT)->2.PROGRAM MODE->6.COMM/REPORT->4.FUNCTION SCHEDULING, if enabled.

ALARM 12345 (Alarms **1**/**2**/**3**/**4**/**5** inputs) – When active, these alarms can be logged in a specified schedule log, MAIN MENU (NEXT)->2.PROGRAM MODE->6.COMM/REPORT->4.FUNCTION SCHEDULING, when the input changes state.

CRD LINE (Coordination line inputs)

IN – Indicates which coordination line inputs are active.

OUT – Indicates which coordination line outputs are active.

Select A. for **Detector Inputs and Timers**

```
        --DETECTOR INPUTS AND TIMERS--
PHASE   1/1   1/1   6/6   6/6   6/6   0/6   6/0
PIN #   56    60    40    44    64    77    48
DET #    1     2    19    20    21    22    23
INPUT
DELAY
STRET
STATUS
```

PHASE x/y – **X** is the phase programmed for the call mode in the database. **Y** is the phase programmed for the extend mode in the database. MAIN MENU(NEXT)->2.PROGRAM MODE->2.CONTROLLER->6.DETECTORS->1.DETECTORS->1.CALL/EXTEND

PIN # – The default pin assignments specified by the state.

DET # – The default detector number assignments specified by the state (1-32).

INPUT

> **X** – Actual detector actuations.
> **M** – Detector calls stored in memory.
> **F** – Failed detector.

DELAY – The delay timer for calling the phase, when phase is Red.

STRET – The stretch timer for keeping the phase passage timer reset.

STATUS – An **X** will appear if the detector actuation is routed to the phase. For example if the delay timer is active and the input is active, the status will not display an **X**. If the stretch timer is active and the input is not active, the status will display an **X.**

Select A. to show the status of **All Detector Inputs**

```
 1   2   3   4   5   6   7   8   DET ACTIVE
 X   X   X       X               X
             9   10  11  12  13  14  15  16
             X       X       X       X
 17  18  19  20  21  22  23  24
     X   X   X                   X
             25  26  27  28  29  30  31  32
                 X   X
```

This screen shows the raw status of all detector inputs coming into the controller. It does NOT show the effect of controller functions like delay or stretch.

From the **Controller Run Menu**, select 7. for the **PHASE SERVICE STATUS DISPLAY**

```
 -PHASE SERVICE DISPLAY--PGDN/UP FOR MORE
PHASE      1    2    3    4    5    6    7    8
USED       X    X    X    X    X    X    X    X
RECALL   MIN CWR MIN MAX MIN CWR MIN PED
RSTR PHS
CFTR 144  X         X    X    X         X    X
CPLN 2   SOFT REC DEL  7.0
PLN STAT: SP0 CPL| MP0 CP        | Quad Left
```

USED – Phases used, in the sequence indicated in lower right corner of screen.

RECALL – The recall mode used for each phase listed below:

FMX – Failed max recall because of detector failure.
CWR – Coordinated rest-in-walk.
PED – Pedestrian recall.
MAX – Max recall.
MIN – Minimum recall by database.
MRI – Minimum recall input or time clock circuit
SFT – Soft recall.
DET – Detector actuation.

RSTR PHS – Restricted phases being used. This is only active during sequences A, E, & Lead/Lag.

CFTR (Cycle failure timer) – This timer monitors service. If the timer reaches zero a failure will be detected and the phases not serviced during the cycle period will be displayed. If all phases serviced have an **X**, the cycle failure timer will be reloaded and a new set of phases with service will be checked. The timer will be reloaded with either twice the largest max time from barrier to barrier, during free operation or twice the cycle length during coordinated operation. The timer is also reloaded by external start, stop time, MCE, any input holds, an active programmed flash, an active preempt, a monitor status or an active transit priority. The failure can be logged in a schedule log when enabled at MAIN MENU(NEXT)->2.PROGRAM MODE->6.REPORT->4.FUNCTION SCHEDULE.

CPLN – Coordination plan selected. It may not be in coordination.

SOFT RECALL DELAY – Displays the soft recall delay timer. When the timer reaches zero, recall is applied to the soft recalled phases.

PLN STAT (Plan status)

SPx = **x** = Service plan in effect.
MPy = **y** = Max plan in effect. (Mode of selection for each will be displayed).

CLK – By time of day.
PE – By preemption.
CPL – By coordination plan.

LOWER RIGHT CORNER – The sequence running will be displayed.

SEQUENT'L – Sequential.
Quad Left – Quad left turn.
Special A – Special sequence A, 12/56 +3478/0.
Special B – Special sequence B, 1234/56 +78/0.
Special C – Special sequence C, 123/567 +48/0.
Special D – Special sequence D, 1234/5678.
Special E – Special sequence E, 1256/0 +34/78.

LAG – Lead/lag sequence 7, phases lagging by an **X** under the phase number **1357**.

Select A. for **OVERLAP STATUS DISPLAY** (Overlaps A-D)

Select A. for **OVERLAP STATUS DISPLAY** (Overlaps E-L)

```
OVERLAP   A   B   C   D
RED       X   X   X   X
YELLOW
GREEN
--OVERLAP TIMERS--   --PGDN/UP FOR MORE--
RED
YELLOW
GREEN
```

OVERLAP RED/YELLOW/GREEN – The active signal will have an **X** under the appropriate overlap.

OVERLAP TIMERS RED/YELLOW/GREEN – An overlap timer is displayed whenever an overlap clears separately from its parent phases. This typically occurs during preemption (depending on programming) or because an overlap is programmed with an extended green interval.

Select A. for **PED OVERLAPS A-H**

```
                --PED OVERLAPS--
PED O/L    A    B    C    D    E    F    G    H
DWALK      X    X    X    X    X    X    X    X
PEDCLR
WALK
--OVERLAP TIMERS--
WALK       0    0    0    0    0    0    0    0
PEDCL      0    0    0    0    0    0    0    0
```

PED O/L DWALK/PEDCLR/WALK – The active signal will have an **X** under the appropriate overlap.

PED OVERLAP TIMERS WALK/PED CL – A ped overlap timer is displayed whenever a ped overlap is timing its Walk or Ped Clearance.

Select A. for **FLASHING YELLOW LEFT TURN ARROWS**

```
  ----FLASHING YELLOW LEFT TURN ARROWS----
FYLTA PH PAIRS      1-2     3-4     5-6     7-8
FYLTA ACTIVE         X               X
FYLTA ENABLE         X       X       X
EVEN OMITS ODD       X               X
DET SW ODD/EVEN      X               X
FYLTA DELAY         1.9      .0     1.9      .0
          --PGDN(A)/UP(B) FOR MORE--
```

An **X** indicates that the function is enabled or active.

FYLTA ACTIVE – An X is displayed when the flashing yellow left turn arrow output (FYLTA) is active and flashing.

FYLTA ENABLED – An X is displayed when the FYLTA phase pair has been enabled via programming.

EVEN OMITS ODD - An X is displayed when the Even Omits Odd function is active.

DET SW ODD/EVEN - An X is displayed when the Det SW function is active.

FYLTA DELAY – Displays the current value of the Red Extension or Red Transition delay times when the delay is in progress.

Select A. for **SERVICE PLAN RECALL MODE DISPLAY**

```
 --SERVICE PLAN 5 RECALL MODE---PGDN(A)--
            1   2   3   4   5   6   7   8
ACTUATED    X       X       X       X   X
MIN REC         X               X
MAX REC
PED REC                 X
SERVICE PLAN SELECTED BY:  CLK
```

Select A. for **PAGE DOWN**

```
 --SERVICE PLAN 5 RECALL MODE---PGDN(A)--
            1   2   3   4   5   6   7   8

SOFT REC
VEH OMIT
PED OMIT
RED REST
SERVICE PLAN SELECTED BY:  CLK
```

The service plan in effect is displayed in row 1. This recall mode does not override the recall programming when a service plan is not active. A service plan can be selected by coord plan circuit mapping, TOD, & Internal Logic.

- **1st SCREEN**

ACTUATED –Detector actuations
MIN REC – Minimum recall
MAX REC – Maximum recall
PED REC – Pedestrian recall

2nd SCREEN

SOFT REC – Soft Recall
VEH REC – Vehicle (phase) omit
PED OMIT – Pedestrian omit
RED REST – Red Rest

Faults

If the controller detects a problem it will display 'SEE HELP' in the upper left corner of the main run screen. If this happens from Run Mode Menu select 2. **FAULTS** to see the **FAULTS STATUS DISPLAY.**

There are a variety of messages or combination of messages that could be shown in this screen. A typical example is shown. If there are no faults the screen will show 'No Faults Detected'.

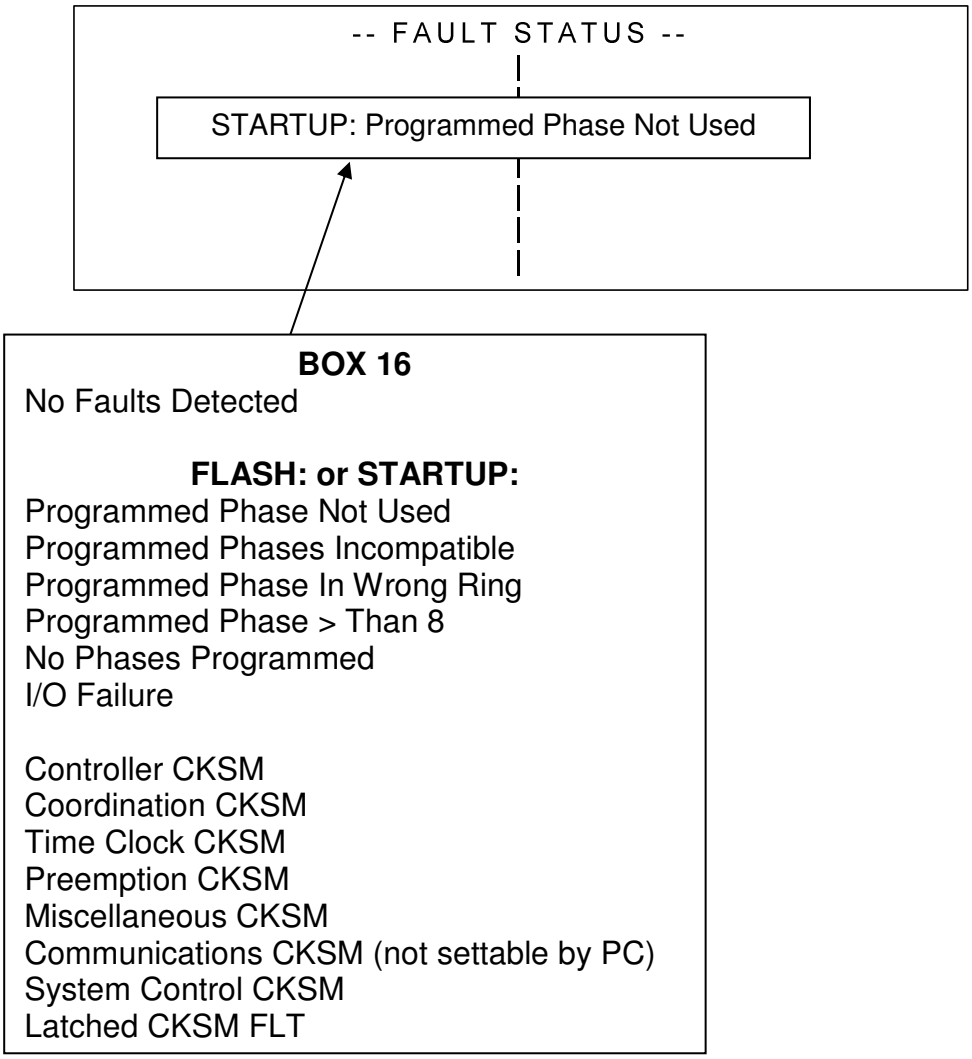

BOX 16 – The descriptions for the controller faults are listed below. All startup failures and database checksum failures will send the cabinet to a hard flash condition using the watchdog output. Controlled flash errors will prevent the controller from entering flash if the entry phases are incorrect and from exiting flash if the exit phases are incorrect.

NO FAULTS DETECTED – No problems have been detected.

NOTE: Prior to the descriptions below, there will appear on the screen **FLASH,** MAIN MENU (NEXT)->2.CONTROLLER->4.FLASH or **STARTUP,** MAIN MENU (NEXT)->2.CONTROLLER->4.INITIALIZE.

Programmed Phase Not Used – The phase programmed is not currently used.

Programmed Phases Incompatible – The phases programmed for ring 1 and ring 2 are not compatible.

Programmed Phase In Wrong Ring – The phase programmed used is entered in the wrong ring.

Programmed Phase > Than 8 – There are safeguards against loading the wrong value for a phase, but data can get corrupted if something abnormal happens. The phase entered for this function is beyond the range allowed for a phase.

No Phases Programmed – There have been no phases programmed for these functions.

STARTUP: I/O Failure – Either the application software can not communicate with the field I/O module or the connector type, MAIN MENU (NEXT)->2.PROGRAM MODE->8.I/O CONFIG->1.INPUTS, does not match the I/O module.

Controller CKSM – The controller section of the database is corrupted.

Coordination CKSM – The coordination section of the database is corrupted.

Time Clock CKSM – The time clock section of the database is corrupted.

Preemption CKSM – The preemption section of the database is corrupted.

Miscellaneous CKSM – Not settable by PC.

Communications CKSM – Not settable by PC.

System Control CKSM – The system database is corrupted.

Latched CKSM FLT – The controller software has detected a corrupt database. The cabinet will remain in flash until the database has been corrected and the controller has been restarted. This gives the user the opportunity to make sure the database is restored properly for on-street use.

Time Clock

From Run Mode Menu select 3. **TIME CLOCK** to see the **TIME CLOCK EVENT STATUS DISPLAY.**

```
--TIME CLOCK EVENT STATUS--
DATE:  /  /          TIME:  :  :
WEEK OF YEAR:        WEEK PROGRAM:
DAY OF WEEK:         DAY PROGRAM:
TOD COORD PLAN:
COORD PLAN IN USE:   MASTER TIMER:
SERVICE PLAN:        MAX PLAN:
--PGDN(A) FOR CIRCUITS--
```

NOTE: The date and time are settable through the program mode

DATE – mm/dd/yy; mm = month of year, dd = day of month and yy = year.

TIME – hh/mm/ss; hh = hour, mm = minute and ss = second.

WEEK OF YEAR – Automatically calculated from the date. Matches the lines on a calendar.

WEEK PROGRAM – Generated by the time clock scheduler.

DAY OF WEEK – Automatically calculated from the date.

DAY PROGRAM – Generated by the time clock scheduler.

TOD COORD PLAN – The coordination plan selected by the time of day scheduler.

COORD PLAN IN USE – The coordination plan being used by the coordinator.

MASTER TIMER – This is generated by the coordination plan in use and the sync reference time.

SERVICE PLAN – The service plan selected by the time clock.

MAX PLAN – The max plan selected by the time clock.

Select A. for **TIME CLOCK CIRCUITS STATUS**

There are 12 screens for the 192 circuits. They can be accessed by entering the screen number or using Page Down & Page Up to move to the desired screen.

```
          --TIME CLOCK OVERRIDES--
CIRCUIT    1    2    3    4    5    6    7    8
FUNCT   CL1 CL2  CL4 CL8 C16  N/U  SFL  N/U
STATUS
CIRCUIT    9   10   11   12   13   14   15   16
FUNCT   N/U N/U  N/U MIN MX2  IM1  IM2 CTF
STATUS                  X
PAGE 1<  OF 12  --PGDN(A)/UP(B)  FOR MORE--
```

CIRCUIT – This is the entry reference for the time clock function.

FUNCT – The help screen (key **F**) or time clock function table gives more detailed information about the TOD circuit functions.

STATUS – An **X** indicates that the function is active.

Preemption

From Run Mode Menu select 4. **PREEMPTION** to see the **PREEMPTION STATUS DISPLAY.**

BOX 17
Entering Preempt x
In Preempt x Sequence
No Sequence Active

```
                                INTVL TIMER:
          -PHASES-                   -PE-OUT-
INT INSTR  12345678 TIME HOI  12345678 FLM
     [ ]     X   X                     [ ]
PHASE OMT:              FORCE-OFF R1:    R2:
   PED OMT:              RED REST R1:    R2:
EXIT MODES: TMR:         PR PHS: [ ]  PR%:[ ]
COORD PLAN   :          FREE:          MAXPL:
```

BOX 19
PE output operation
0= All steady on
1= All flash together
2= Odds flash wig and evens flash wag
3=1-4 steady on, 5-8 all flash together

BOX 18
0= Service phases in PHASES location
1-9= Use special intervals 1-9
90= Go to all red
91/92= Turn soft flash on/off
93/94= Enable/disable pedestrian service under PHASES
95= Priority return
96= Enable coordination
98= Return with no calls
99= Return with vehicle calls under PHASES
100= Jump to INTERVAL # defined in the TIME column, input must be active
101= Use TIME as resetable gap timer and service phases under PHASES
200= LRT with NO ped
201= LRT with Ped
202= Queue-Delay Recovery

BOX 21
A-E= Priority return set used for vehicles

BOX 20
Priority Return Phases
1-8= Phase
1= All flash together
V= Vehicle
P=Pedestrian

BOX 17 – Status of the preemptor.

Entering Preempt x – When displayed, the preempt is recognized & the controller is transitioning to service the preempt. **x** = Active preempt (1-8).

In Preempt x Sequence – The preemptor is in the preempt sequence. **x** = Active preempt (1-8).

No Sequence Active – No preempt inputs are active.

INTVL TIMER – Once in the preempt sequence this timer determines the minimum amount of time the active preempt interval will be executed.

INT – The active preempt interval.

BOX 18 – Instruction code used by the active preempt interval.

PHASES – An 'X' is placed under the phases being operated on by the instruction. In the example phases 2 & 5 are the phases being operated on.

TIME – The value the interval timer is being loaded with at the beginning of the instruction. An exception is instruction 100 (Jump To), which shows the interval which will be executed next, if the preempt input is active.

HOI (Hold on input) – Display can be: blank, X, 1 or 0

Blank: No sequence is active.

X: The input is active and the current interval has Hold on Input programmed; or the input is active and the controller is transitioning to the 1st interval which has Hold on Input programmed.

1: The input is not active and the current interval has Hold on Input programmed.

0: The current interval doesn't have Hold on Input programmed. The status of the input has no effect on this display.

PE-OUT (Preempt outputs) – The preempt outputs being activated during the preempt interval.

BOX 19 – The **FLM** (preempt output flashing mode) entry.

PHASE OMT (Phase omits) – The phase omits per phase being activated by the preemptor.

FORCE-OFF R1: R2: – The force-offs per ring being activated by the preemptor.

PED OMT (Pedestrian omits) – The pedestrian omits per phase being activated by the preemptor.

RED REST R1: R2: – The red rest being activated per ring by the preemptor.

EXIT MODES – The possible exit modes available to smooth the transition from preemption to normal operation.

TMR – Exit mode timer with a range of 0-60 minutes. This is a timer for determining if an exit mode will be used at the end of a preempt. The timer begins at the start of the 1st interval of the sequence. If the timer has timed out, before the end of the preempt sequence, then the exit modes will be used. If the exit timer has not timed out then the exit modes will not be used.

BOX 20 'PR PHS' – The priority return phases for ring 1 and ring 2. The number is the phase (1-8). The letter is 'V' for vehicle and 'P' for pedestrian.

BOX 21 'PR%' - There are 5 sets of priority return percentages A-E. This indicates which priority return set has been called.

COORD PLAN – The coordination plan selected by the last active preempt and the timer to determine how long the coordination plan will be used. This coordination plan is N/A if the coordinator is running free.

FREE – The free timer will keep the coordinator free for the length of time remaining.

MAX PL (Max plan) – The max plan selected by the last active preempt. The max plan will be used as long as either the free timer or coordination timer are running.

Select A. for **PREEMPT I/O STATUS DISPLAY**

INPUT	1	2	3	4	5	6	7	8
STATUS		O	M	X				
PRIORITY	3	3	1	2	0	0	0	0
DELAY	10	0	10	0	0	0	0	0
MIN RES	0	0	0	0	0	0	0	0
OVERIDE	4	0	0	0	0	0	0	0
FAIL	0	0	10	2	0	0	0	0
OUTPUTS				X				

STATUS

X – Input is active.
M – Call stored in memory.
O – Input is active and has been disabled by the override timer. The input has been active for a period greater than the override time and will not be enabled until the input becomes inactive.

F – Input is active and has been disabled by the fail timer. The cabinet will be in soft flash because the input was active for a period greater than the fail time. The cabinet will remain in soft flash until the input becomes inactive.

PRIORITY – The priority assigned, MAIN MENU(NEXT)->2.PROGRAM MODE->5.PREEMPTION->0.HI PE SETUP->1.PRIORITY, in the database for each input. Recommended priority for railroad is 7 or 8. If there are multiple preempts at an intersection the railroad preempts should always have a higher priority than any other preempt.

DELAY (Delay timer 'seconds') – The delay timer associated with the preempt input. The call for preempt will not be recognized until the delay timer has reached zero.

MIN RES (Minimum re-service timer 'minutes') – The time between allowable preempt service on the same preempt input.

OVERRIDE (Override timer) – The timer starts timing towards zero when the input becomes active.

FAIL (Fail timer) – The timer starts timing towards zero when the input becomes active.

OUTPUTS – This indicates when the preempt-out is active with an **X**.

Select A. for **LRT STATUS DISPLAY**

(PI) LRT	1		2		3		4	
TTG TMR(PE)	0(6)		0(6)		0		0	
H-BAR FLTMR	.0		.0		.0		.0	
V-BAR TIMER	0		0		0		0	
V-BAR FLTMR	.0		.0		.0		.0	
PHASE	1	2	3	4	5	6	7	8
QUEUE CT	3	0	2	6	3	0	4	4
STOP TMR	57	0	35	48	52	0	35	48

(PI) – Ped Inhibit active. Displays the current status of the Ped Inhibit function. If not active, there will be a blank space between the parentheses.

TTG TMR(PE) – The Time-to-Green timer associated with the LRT function. The vertical bar timer will begin decrementing at the expiration of the TTG timer. The associated preempt input (1-8) is shown within the parentheses.

H-BAR FLTMR – The Horizontal Bar Flash Timer decrements during the last portion of the TTG timer.

V-BAR FLTMR – The Vertical Bar Flash Timer decrements upon checkout or upon achieving the maximum TIME setting for the preempt interval.

QUEUE CT – A total count of detector actuations since the phase last turned yellow. Must have Back Detectors programmed under Dynamic Phase Length. This data is used in conjuction with preempt exit instruction “Queue-Delay Recovery”.

STOP TMR – The Stop Timer indicates the a total time that has passed since the phase last turned yellow. This data is used in conjuction with preempt exit instruction “Queue-Delay Recovery”.

Transit Priority

From Run Mode Menu select 5. **TRANSIT PRIORITY** to see the **TRANSIT PRIORITY STATUS DISPLAY.**

The following parameters are displayed during transit priority. Also, “TRANSIT x ACTIVE” will be displayed on the power-up run screen.

TR PRI	1	2	3	4	5	6	7	8
STATUS	K1A	1	1	1	1	1	1	1
DELAY	0	0	0	0	0	0	0	0
BUS GRN	21	0	0	0	0	0	0	0
MIN RES	0	0	0	0	0	0	0	0
OVRRIDE	0	0	0	0	0	0	0	0
ST CODE	3	0	0	0	0	0	0	0
MIN RES ALL:	0				TOD TRANSIT GRP:		1	

STATUS: Reflects the status of the current call, if any.

X = Active transit input.
M = Memory is on, and the transit input not active.
K = Keyboard initiated transit call.
A = Achieved transit phase.
O = Override. The Override timer has expired.
F = Failed. The Failed timer has expired (255 seconds).
C = The Clear Transit Call input is active.
S = Serve. An active transit call has not yet achieved the transit phase(s).
I = Inhibit. The transit call is inhibited for one of the reasons described in the transit programming section.
0-8 = The priority level of the active transit call.

DELAY – The delay timer that must time out before the transit call is acknowledged (sec).

BUS GRN – The amount of green for the transit phase (sec).

MIN RES – The minimum reservice timer (min).

OVRRIDE – The override timer (sec).

ST CODE: The status code reflects the status of the last historical transit call.

0 = Inactive. Not programmed or no activity since last power-up.

1 = Started. The TP input has become active, but not yet in TP phases.

2 = Went away/no Green. The TP input went away before TP phases achieved, or the TP clear input became active before TP phases achieved.

3 = TP Green. The TP associated phases are now Green. Either the controller has moved to the TP phases after the TP input became active or was in TP phases when TP input became active.

4 = Max extend. The TP phase has extended to its normal max + its Bus Extend value before input cleared or went away.

5 = Priority override. A TP input with a higher priority was recognized, overrode an existing TP and gained control of TP.

6 = Override. Override timer has been exceeded and the TP input has been inhibited.

7 = Failed. The 255 second failed timer has expired and the input has been inhibited (input stuck on, inhibit released when the input goes away).

8 = Inhibit. The transit call was inhibited due to Flash Sense, MCE, Stop Time, coordination Fastway transition (shortening only).

9 = Return to normal. The input was failed (code 7) but has since returned to normal.

10 = Min re-service refusal. TP input was recognized, but refused, because the Min Re-service timer was still timing down for this input.

11 = TOD inhibit input. The Inhibit Transit Priority input was applied before the transit phase was achieved.

12 = Force-off termination. The TP associated phases have been forced-off at their TP alternate force-off values. (It is likely that the bus didn't clear on this cycle.)

13 = Went away/Green. The transit priority input went away during transit phase Green. (Probably bus cleared on this cycle during normal green.)

14 = Clear/Green. The transit priority clear input became active during transit phase Green. (Bus cleared intersection.)

15 = Went away/Green Extension. The transit priority input went away during transit phase Green Extension. (Probably bus cleared during the extension of green.)

MIN RES ALL – Time between any successive transit call, if programmed (sec).

TOD TRANSIT GRP – The currently selected TP Group 1-8 (max and walk).

Select A. (advance or page down) for the **TRUCK PRIORITY DISPLAY**. If Truck Priority is in use, this display will show the activity of the 4 Truck Priority functions.

TRUCK (TP)	1(1)	2	3(2)	4
TRUCK TMR	6	0	8	0
UN-SIZE TMR	7	0	0	0
LEADING DET	19	0	21	0
TRAILING	20	0	22	0
VEH SPEED	33	0	41	0
VEH LENGTH	46	0	49	0
TIME TO SB	10	0	8	0

TRUCK (TP) – The Truck Priority function number followed by the associated Transit Priority function, in parenthesis.

TRUCK TMR – The largest amount of time remaining in the Truck Timer for any of the up to 10 trucks in the stack (s).

UN-SIZE TMR – The largest amount of time remaining in the Undersized Vehicle Timer for any of the up to 10 undersized vehicles in the stack (s).

LEADING DET – The detector input number of the leading detector (1-32), for reference.

TRAILING – The detector input number of the trailing detector (1-32), for reference.

VEH SPEED – The measured speed of the last truck (mph).

VEH LENGTH – The measured length of the last truck (ft).

TIME TO SB – The calculated Time to Stop Bar for the last truck (s).

Select A. for the **2nd TRUCK PRIORITY DISPLAY**.

TRUCK	1	2	3	4
LEADING OCC	0.000	0.000	0.000	0.000
LANE OCC	0.000	0.000	0.000	0.000
UN-SIZE TIMER	0.0	0.0	0.0	0.0
BEGINNING OF DILEMMA	0.0	0.0	0.0	0.0

TRUCK – The Truck Priority function number (1-4).

LEADING OCC – The amount of time that the last truck occupied the leading detector (s).

LANE OCC – The amount of time that the last truck took to cover the trap distance (s).

UN-SIZE TMR – The largest amount of time remaining in the Undersized Vehicle Timer for any of the up to 10 undersized vehicles in the stack (s).

BEGINNING OF DILEMMA – The calculated amount of time needed for the undersized vehicle to travel from the beginning of the dilemma zone to the stop bar.

Internal Logic

From Run Mode Menu select 6. **INTERNAL LOGIC** to see the **INTERNAL LOGIC STATUS DISPLAY.**

```
INTERNAL LOGIC: -PGDN FOR MORE- CPLN:  2
              1   2   3   4   5   6   7   8
ACT INP     101 105   0   0   0   0   0   0
DEAC INP      0   0   0   0   0   0   0   0
ACT OUT     211   0   0   0   0   0   0   0
DEAC OUT     21   0   0   0   0   0   0   0
ACT TOD       0   0   0   0   0   0   0   0
DEAC TOD      0   0   0   0   0   0   0   0
```

Via internal logic up to 8 each of (Inputs, Outputs or TOD Circuits) can be activated or deactivated. Thus there is an 8 x 6 matrix of (48) possible actions taken by internal logic. The implication of this is that only 8 inputs can be activated by internal logic, because there are only 8 registers for this action.

COORD PLAN – The coordination plan activated by the internal logic instruction 214. The coordinator has to be activated by some other means in order for this coordination plan to be used.

ACT INP (Activate input function) – The input functions activated by the internal logic instructions 201, 202, 203 or 206. The input functions do not have to be assigned to an input pin to be activated.

DEAC INP (Deactivate input function) – The input functions are deactivated by the internal logic instruction 220. The input functions do not have to be assigned to an input pin to be deactivated.

ACT OUT (Activate output function) – The output functions activated by the internal logic instruction 205. The output functions do not have to be assigned to an output pin to be activated.

DEAC OUT (Deactivate output function) – The output functions are deactivated by the internal logic instruction 221. The output functions do not have to be assigned to an input pin to be deactivated.

ACT TOD (Activate Time of Day circuit) – The time of day circuits are activated by internal logic instruction 215.

DEAC TOD (Deactivate Time of Day circuit) – The output functions are deactivated by the internal logic instruction 222.

Select A. for **2nd INTERNAL LOGIC DISPLAY**

```
INTERNAL LOGIC: -PGDN FOR MORE- CPLN:   2
              1    2    3    4    5    6    7    8
TIMERS     10.0   .0 10.0   .0   .0   .0   .0   .0
COUNTERS      0    6   42    0    0    0    0    0
TOG OUT     101    0    0    0    0    0    0    0
LO RELAY                    X

SY RELAY              X              X
```

TIMERS – The timers are loaded and tested by the internal logic instruction 208. Timers 1-4 are timing in tenths while timers 5-8 are timing in seconds.

COUNTER– The counters (1-8) are loaded and incremented by the internal logic instructions 217 and 216, respectively. Test Condition 32 is used to test the current value of a counter.

TOG OUT (Toggle output function) – The output functions toggled by the internal logic instruction 204. The output functions do not have to be assigned to an output pin to be toggled.

LO RELAY – The status of Relay bits set by the Local controller.

SY RELAY – The status of Relay bits as sent from the System (master controller).

Select A. for **2nd INTERNAL LOGIC DISPLAY**

```
INTERNAL LOGIC:                          CPLN: 2
              1    2    3    4    5    6    7    8
LATCH         X              X
PH OMIT                 X
PH HOLD                                  X
FORCES                  X
ILO 1-8
ILO 9-12           X
```

On this screen an ‘X’ = Active.

LATCH – The latches (1-8) set by the internal logic instruction 209.

PH OMIT (Omits per phase) – The phase omits activated by the internal logic instruction 211.

PH HOLD (Holds per phase) – The phase holds activated by the internal logic instruction 212.

FORCES (Force-offs per phase) – The phase force-offs activated by the internal logic instruction 213.

ILO 1-8 and 9-12 (Internal logic outputs) – The internal logic outputs are activated by internal logic instruction 205.

Comm Status

From Run Mode Menu select 7. **COMM STATUS** to see the **COMM STATUS DISPLAY FOR PORT 1.**

Select A. for **COMM PORTS 2-4**

```
COMM PORT  1   (SP1:  SLOT A2 UPPER)
XCMD:    BYTES:    CRC:      SI:     LI:

RCMD:    BYTES:    CRC:      SI:     LI:

CONN:     RETRY P1:       P2:     BUSY:
UFXMTB FCM# OVR FRM PTY RNG DSR DCD CTS
```

XCMD (Transmit command) – The transmitted command from the communications port.

BYTES – The number of bytes contained in the transmission.

CRC (Cyclic redundancy check) – The checksum for the transmitted message in hexadecimal form.

SI (System identification) – The system id transmitted. An id of 255 is a broadcast such as poll locals and set time.

LI (Local identification) – This is the local ID transmitted.

THE THIRD ROW (Underneath **XCMD**) – The body of the message if required. It is shown in hexadecimal form and is proprietary (information can be obtained from Northwest Signal Supply).

RCMD (Receive command) – The received command from the communications port.

BYTES – The number of bytes contained in the reception.

THE FIFTH ROW (Underneath **RCMD**) – The body of the message if required. It is shown in hexadecimal form and is proprietary (information can be obtained from Northwest Signal Supply).

UFXMTB (Unfilled transmit buffer) – Indicates the remaining allowable transmit data which can be sent. (Varies between controller manufacturers).

FCM # (Flow control mode) – An indication of the flow control mode being used.

An ‘X’ = Active, if it is below any of the following functions.

OVR (Overrun) – An overrun error detected on the received message.

FRM (Framing) – A framing error on the received message.

PTY (Parity) – A parity error detected on the received message.

RNG (Ring) – The ring input is active.

DSR (Data set ready) – The data-set-ready input is active

DCD (Data carrier detect) – The data-carrier-detect input is active.

CTS (Clear to send) – The clear-to-send input is active.

CENTRAL PORT – If the controller has one of its five ports assigned as the central port, MAIN MENU (NEXT)->2.PROGRAM MODE->6.COMM->2.CENTRAL PORT, the following pertains. (Also, the transmitted and received commands to the modem are displayed).

On the 6th line of the Comm Port Run Screen the following 4 values will be shown.

1. CONN (Connect timer) – When trying to dial the central pc, it has 30 seconds to make a connection to another modem before quitting and retrying after five minutes. If a connection has been made with another modem, the controller will send an RL (reporting logs) command. If no response is received, it will try four times every five seconds.

-or-

1. DISC (Disconnect timer) – Replaces CONN if calling central pc. After communications are established, if no additional messages are received after five minutes, the controller will hang up.

2. RETRY P1 (Retry timer phone 1) – If when calling the central pc phone number 1, no communications are established, the controller will hang up, load the retry timer for five minutes and then try again.

3. RETRY P2 (Retry timer phone 2) – If when calling the central pc phone number 2, no communications are established, the controller will hang up, load the retry timer for five minutes and then try again.

4. BUSY – When the central is talking to the controller through the central port, a timer will be loaded with 5 minutes. As long as this timer is non-zero, the controller will not call in its logs to report to central.

Logs

From Run Mode Menu select 8. **VOL/MOE/SCHEDULE/TRANSIT LOG** to see the **LOG RUN MENU.**

```
                --LOG RUN MENU--

   1.SCHEDULE A     5.MEASURE OF
   2.SCHEDULE B       EFFECTIVENESS (MOE)
   3.SCHEDULE C     6.VOLUME
   4.SCHEDULE R     7.TRANSIT
```

Select 1., 2., 3. or 4. for **SCHEDULE LOGS**

```
SCHED. LOG A: ALL/1/2: 0<    LOG ENTRY:  3
RECORDS STORED:   3      ENTER 0 TO CLR LOG
ENTRY                        DATE     TIME
Data Changed Thru KB       11/10/04 10:02:44
Power Up                   11/10/04 09:57:54
Power Down                 11/10/04 09;57:48
```

To select the record source (all logs, phone 1/pointer 1 or phone 2/pointer2), select a log entry to view, or clear all log entries; use the arrows keys to move the cursor to the appropriate location on the screen. Use the number keys to set the value required. Use the **E** key or arrow keys to enter the value. To cancel the database entry change before entering the new data, use the **C** key to restore the previous database value.

SCHED. LOG – Shows which log is being viewed, A, B, C or R.

Note: The following definitions of ALL/1/2 apply to all log displays described in this section.

> **ALL/1/2** = 0 (ALL) - This shows the total number of records. By entering **0**, in the address Records Stored, all of the logs will be cleared.
>
> **ALL/1/2** = 1 - This points to the remaining records that have not been phoned in on phone 1, or have not been retrieved by NWSCentral. By entering **0**, in the address Records Stored, pointer 1 is reset and none of the current logs can phoned in via phone 1 or retrieved by looking at pointer 1. Entering a 0 doesn't clear the logs.
>
> **ALL/1/2** = 2 - This points to the remaining records that have not been phoned in on phone 2, or have not been retrieved by NWSCentral. By entering **0**, the address Records Stored, pointer 2 is reset and none of the current logs can phoned in via phone 2 or retrieved by looking at pointer 2. Entering a 0 doesn't clear the logs.

LOG ENTRY – Displays the number of the last log entry, (100 records possible).

RECORDS STORED – Show the number of records being viewed for the record type specified in **ALL/1/2**.

ENTRY – The messages which can be displayed are listed below. These entries are assigned to one of the logs at MAIN MENU (NEXT)->2.PROGRAM MODE->6.REPORTS->4.FUNCTION SCHEDULING.

Power Up	Manual CONT Enable Off
Power Down	Enter CONTR Cycle Fail
Power Interrupt	Exit CONTR. Cycle Fail
CONTR. Checksum Fail	COORD, Cycle Fault
COORD. Checksum Fail	COORD, Coord. Fault
Time CLK Checksum Fail	COORD, Coord. Active
Preempt Checksum Fail	Coordination Failure
Misc. Checksum Fail	Keyboard Security Code
Comm. Checksum Fail	Security Code Time Out
CONTR. Checksum Fixed	Coordination Running
COORD. Checksum Fixed	Coordination Free
TimeCLK Checksum Fixed	Enter PWRUP FL CMD ACT
Preempt Checksum Fixed	Exit PWRUP FL CMD ACT
Misc. Checksum Fixed	Cabinet Door Open
Comm. Checksum Fixed	Cabinet Door Closed
SFL-Flash Manual	Entered Monitor Flash
SFL-Flash Test A	Exited Monitor Flash
SFL-Flash SFL Input	Download Completed
Soft-Flash TOD CKT 7	Data Changed Thru KB
Preempt Input Failure	SFL-Flash Comm
Power Up Preempt Active	Exit SFL-FL Comm
Exit SFL-Flash Manual	Alarm x On, x = 1-5
Exit SFL-Flash Test A	Alarm x Off, x = 1-5
Exit SFL-Flash SFL In	Enter Preempt x, x = 1-8
Exit Soft-Flash TOD 7	Exit Preempt x, x = 1-8
Exit PE Input Failure	Det. xx No Activity, xx = 1-32
Exit Power Up PE Active	Det. xx Below Threshld, xx = 1-32
Manual CONT. Enable On	Det. xx Above Threshld, xx = 1-32
SysCont Checksum Fail	Det. xx Constant Call, xx = 1-32
SysCont Checksum Fixed	Det. xx Return to Normal, xx = 1-32
Video Fail x Active, x = 1-8	Video Fail x Inactive, x = 1-8

DATE and **TIME** – The date and time of the entry.

Select 5. for **1st Display MOE LOG** being accumulated

```
MOE LOGGING IP:     LOG ENTRY IN PROGRESS
RECORDS STORED:  487  ENTER 0 TO CLR LOG
DATE:  11/10/04      TIME:  10:42:05 PERIOD: 15
PHASE      1    2    3    4    5    6    7    8
SERVED     0    4    3    3    0    4    0    0
PEDS       0    0    0    0    0    7    0    0
AVG GRN    0   55   25   15    0   55    0    0
          --PGDN(A)/UP(B) FOR MORE--
```

This display shows the MOE data being accumulated for the next log entry.

RECORDS STORED – The number of records stored in the log. By entering zero at this location, the log can be cleared.

DATE and **TIME** – Real time display.

PERIOD – The period over which the data is to be accumulated.

SERVED – The number of times the phase was served during the period.

PEDS – The number of times the pedestrian phase was served during the period.

AVG GRN – The average green (in seconds) for the number of times the phase was served.

Select A. to page down to **2nd Display MOE LOG** being accumulated

```
MOE LOGGING IP:     LOG ENTRY IN PROGRESS
RECORDS STORED:  487  ENTER 0 TO CLR LOG
DATE:  11/10/04      TIME:  10:42:05 PERIOD: 15
PHASE      1    2    3    4    5    6    7    8
MAX'S      0    1    0    0    0    0    0    0
F.O.'S     0    0    6    6    0    0    0    0
GAP'S      0    6    0    0    0    7    0    0
          --PGDN(A)/UP(B) FOR MORE--
```

This display shows the MOE data being accumulated for the next log entry.

MAX'S – The number of times the phase was maxed out during the period.

F.O'S – The number of times the phase was forced off during the period.

GAP'S – The number of times the phase gapped out during the period.

Select A. to page down to **1st ACCUMULATED MOE LOG ENTRIES DISPLAY**

```
MOE LOG:  ALL/1/2:  0<        LOG ENTRY:   489
RECORDS STORED:  489  ENTER 0 TO CLR LOG
DATE:  11/10/04       TIME:  10:52    PERIOD: 15
PHASE      1    2    3    4    5    6    7    8
SERVED     0    8    8    8    0    8    0    0
PEDS       0    0    0    0    0   17    0    0
AVG GRN    0   55   25   15    0   55    0    0
          --PGDN(A)/UP(B) FOR MORE--
```

To select the record source (all logs, phone 1/pointer 1 or phone 2/pointer2), select a log entry to view, or clear all log entries; use the arrows keys to move the cursor to the appropriate location on the screen. Use the number keys to set the value required. Use the **E** key or arrow keys to enter the value. To cancel the database entry change before entering the new data, use the **C** key to restore the previous database value.

LOG ENTRY – Displays the number of the last log entry, (1500 records possible).

RECORDS STORED – Show the number of records being viewed for the record type specified in **ALL/1/2**.

DATE and **TIME** – The middle of the period in which data was accumulated.

PERIOD – The period over which the data was accumulated.

SERVED – The number of times the phase was served during the period.

PEDS – The number of times the pedestrian phase was served during the period.

AVG GRN – The average green (in seconds) for the number of times the phase was served.

Select A. to page down to 2nd ACCUMULATED MOE LOG ENTRIES DISPLAY

```
MOE LOG:  ALL/1/2:  0<        LOG ENTRY:   489
RECORDS STORED:  489  ENTER 0 TO CLR LOG
DATE:  11/10/04       TIME:  10:52    PERIOD: 15
PHASE      1    2    3    4    5    6    7    8
MAX'S      0    1    0    0    0    0    0    0
F.O.'S     0    0    8    8    0    0    0    0
GAP'S      0    7    0    0    0    8    0    0
          --PGDN(A)/UP(B) FOR MORE--
```

MAX'S – The number of times the phase was maxed out during the period.

F.O'S – The number of times the phase was forced off during the period.

GAP'S – The number of times the phase gapped out during the period.

Select 6. for **1st VOLUME LOG** (Detectors 1-14) **Display**

Select A. for **2nd** (Detectors 15-28) **& 3rd** (Detectors 29-32) **VOLUME LOG Display**

```
VOLUME LOGGING IP:   LOG ENTRY IN PROGRESS
RECORDS STORED:    398<  ENTER 0 TO CLR LOG
DATE: 11/10/04    TIME:  11:12:46    PERIOD:  60
PIN #      56   60   58   62   55   59   57
  VOL      71   67   69   63   47   49   41

PIN #      61   39   43   63   76   47   41
  VOL     150  139  143    0    0    0    0
```

This display shows the Volume data being accumulated for the next log entry.

RECORDS STORED – The number of records stored in the log. By entering zero at this location, the log can be cleared.

DATE and **TIME** – Real time display.

PERIOD – The period over which the data is to be accumulated.

PIN # - The pin numbers which correspond to the defaults specified by the 332 cabinet specifications.

VOL (Volume) – The number of accumulated actuations for the detector.

Select A. for **1st ACCUMULATED VOLUME LOG** (Detectors 1-14)

Select A. for **2nd** (Detectors 15-28) **& 3rd** (Detectors 29-32) **ACCUMULATED VOLUME LOG**

```
VOLUME LOG: ALL/1/2: 0<   LOG ENTRY:   399
RECORDS STORED:    414<  ENTER 0 TO CLR LOG
DATE: 11/10/04    TIME:  11:30:00    PERIOD:  60
PIN #      56   60   58   62   55   59   57
  VOL     523  485  493  440  328  274  302

PIN #      61   39   43   63   76   47   41
  VOL     348  304  165    0    0    0    0
```

This display shows the VOLUME data accumulated for the log entry.

To select the record source (all logs, phone 1/pointer 1 or phone 2/pointer2), select a log entry to view, or clear all log entries; use the arrows keys to move the cursor to the appropriate location on the screen. Use the number keys to set the value required. Use the **E** key or arrow keys to enter the value. To cancel the database entry change before entering the new data, use the **C** key to restore the previous database value.

LOG ENTRY – Displays the number of the last log entry, (1500 records possible).

RECORDS STORED – Show the number of records being viewed for the record type specified in **ALL/1/2**.

DATE and **TIME** – The middle of the period that data was accumulated.

PERIOD – The period over which the data is to be accumulated.

PIN # - The pin numbers which correspond to the defaults specified by the 332 cabinet specification.

VOL (Volume) – The number of accumulated actuations for the detector.

Select 7. for **TRANSIT PRIORITY LOGS**

TRANSIT LOG: ALL/1/2: 0< LOG ENTRY: 6
RECORDS STORED: 6 ENTER 0 TO CLR LOG

T	ST	PH	CP	ON	GRN	OFF	DATE	TIME
6	12	16	1	6	45	50	11/11/04	11:14:20
6	3	16	1	6	45	0	11/11/04	11:14:15
6	1	37	1	6	0	0	11/11/04	11:13:36
2	12	25	1	18	50	50	11/11/04	11:12:50
2	1	37	1	18	0	0	11/1104	11:12:18

This screen can be used to view the current or last registered activity for each TP input 1-8. There is a time clock enable for transit priority logging, TOD circuit 137. The log will be retrieved by request only, no auto call in. There will be a total of 1000 records stored before the old data entries are overwritten by the new ones. To select the record source (all logs, pointer 1 or pointer 2), select a log entry to view, or clear all log entries; use the arrows keys to move the cursor to the appropriate location on the screen. Use the number keys to set the value required. Use the **E** key or arrow keys to enter the value. To cancel the database entry change before entering the new data, use the **C** key to restore the previous database value.

LOG ENTRY – Displays the number of the last log entry, (1000 records possible).

RECORDS STORED – Show the number of records being viewed for the record type specified in **ALL/1/2**.

The following TP information is be logged:

T: The number of the transit priority function (1-8).

ST: The TP input status as a result of this event where;

0 = Inactive. Not programmed or no activity since last power-up.

1 = Started. The TP input has become active, but not yet in TP phases.

2 = Went away/no Green. The TP input went away before TP phases achieved, or the TP clear input became active before TP phases achieved.

3 = TP Green. The TP associated phases are now Green. Either the controller has moved to the TP phases after the TP input became active or was in TP phases when TP input became active.

4 = Max extend. The TP phase has extended to its normal max + its Bus Extend value before input cleared or went away.

5 = Priority override. A TP input with a higher priority was recognized, overrode an existing TP and gained control of TP.

6 = Override. Override timer has been exceeded and the TP input has been inhibited.

7 = Failed. The 255 second failed timer has expired and the input has been inhibited (input stuck on, inhibit released when the input goes away).

8 = Inhibit. The transit call was inhibited due to Flash Sense, MCE, Stop Time, coordination Fastway transition (shortening only).

9 = Return to normal. The input was failed (code 7) but has since returned to normal.

10 = Min re-service refusal. TP input was recognized, but refused, because the Min Re-service timer was still timing down for this input.

11 = TOD inhibit input. The Inhibit Transit Priority input was applied before the transit phase was achieved.

12 = Force-off termination. The TP associated phases have been forced-off at their TP alternate force-off values. (It is likely that the bus didn't clear on this cycle.)

13 = Went away/Green. The transit priority input went away during transit phase Green. (Probably bus cleared on this cycle during normal green.)

14 = Clear/Green. The transit priority clear input became active during transit phase Green. (Bus cleared intersection.)

15 = Went away/Green Extension. The transit priority input went away during transit phase Green Extension. (Probably bus cleared during the extension of green.)

PH: The ring 1/ring 2 phases active at the time codes 1, 3, 4, 12 detected. Note that the phase values as set by codes above do not change as a result of any of the other status codes being logged.

CP: Coordination Plan in effect.

Note: The following ON, GRN and OFF status values represent points in the active cycle. They are meaningful only when the unit is in coordinated operation.

ON: The point in the active cycle that the TP input becomes active

GRN: The point in the active cycle that the TP phase green becomes active. If there is more than one TP phase (dual ring) it is the first point when *both* are green.

OFF: The point in the active cycle that the TP input goes away, clears, or is inhibited due to override time out, max extend time out, and/or fail.

DATE: The date the transit event occurred.

TIME: The time the transit event occurred.

Connector I/O

From Run Mode Menu select 9. **CONNECTOR I/O** to see the **INPUT/OUTPUT RUN MENU.**

```
--INPUT/OUTPUT RUN MENU--

1.INPUTS

2.OUTPUTS
```

Select 1. for **INPUT STATUS DISPLAY**

```
INPUT STATUS--(PINS:C=C1, X=C11)   CONN: 0
 C-39  C-40  C-41  C-42  C-43  C-44  C-45  C-46
 VD9   VD19 VD14 VD24  VD10 VD20 VD15  VD25
             X     X

 C-47  C-48  C-49  C-50  C-51  C-52  C-53  C-54
 VD13  VD23 VD18 VD28  N/U   PE5   MCE  N/U
```

The upper right corner shows the connector type the controller is using for outputting and inputting connector functions.

An **X** under the function indicates the input function is active.

Select 2. for **OUTPUT STATUS DISPLAY**

```
OUTPUT STATUS--(PINS:C=C1, X=C11)   CONN: 0
C-2   C-3    C-4    C-5   C-6    C-7    C-8   C-9
4DWK 4WLK  4RED  4YEL 4GRN  3RED  3YEL 3GRN
  X                  X           X

C-10  C-11  C-12  C-13  C-15  C-16  C-17  C-18
2DWK 2WLK  2RED 2YEL  2GRN  1RED  1YEL 1GRN
  X            X                  X
```

The upper right corner shows the connector type the controller is using for outputting and inputting connector functions.

An **X** under the function indicates the output function is active.

System

A system is a grouping of local controllers where one of the local controllers is a master. The concept of a system is further described in this manual in Program Mode/System/General.

System Run Screens

The following run screens are only visible if the controller is a master that polls its locals. This is true if the controller is in Master Mode: 2. The Master Mode is set on the comm setup screen, see the chapter on Communications and Reports.

From Run Mode Menu select 0. **SYSTEM** to see the **SYSTEM RUN MENU**.

```
              --SYSTEM RUN MENU--

1.LOCAL COMM STATUS    5.PLATOON
2.POLLED LOCAL DATA      PROGRESSION LOG
3.MASTER SYS DETS      6.PROACTIVE/SPLIT
4.PROACTIVE PLAN         VARIANT PLN LOG
  SELECTION/SPLIT
  VARIANT OPER.
```

Select 1. **LOCAL COMM STATUS** for intersections 1-30

```
A = ACTIVE              SYSTEM LOCALS
                 1   2   3   4   5   6   7   8   9  10
COMM ST          A   A   A   N   N   N   N   N   N   N
                11  12  13  14  15  16  17  18  19  20
COMM ST          N   N   N   N   N   N   N   N   N   N
                21  22  23  24  25  26  27  28  29  30
COMM ST          N   N   N   N   N   N   N   N   N   N
          -- PGDN(A)/UP(B) FOR MORE --
```

Page Down (**A**) to view **LOCAL COMM STATUS** for intersections 31-50

```
A = ACTIVE              SYSTEM LOCALS
                31  32  33  34  35  36  37  38  39  40
COMM ST          A   A   A   N   N   N   N   N   N   N
                41  42  43  44  45  46  47  48  49  50
COMM ST          N   N   N   N   N   N   N   N   N   N


          -- PGDN(A)/UP(B) FOR MORE --
```

COMM ST – These two screens show whether an intersection is enabled for communications from this master. If the communications is enabled it shows the status of communications for the intersection. The locals in the system are sent the real time and the current coord plan at a minimum of once per minute (this is also true of System Mode = “1”). The local controllers then respond with their unique local status information.

COMM ST - Display options

A - Active. The associated local controller is currently responding properly to commands from the master controller.

N - Not Used.

M - Marginal. One or more responses from the local controller were missed during the last five polls.

L - Lost. There were no responses from the local controller following the last five polls.

Page Down (**A**) to view **POLLED LOCAL DATA for Intersection #1**

```
POLLED LOCAL:   1<  COMM STATUS:  Active
CONTR STATUS: Normal
CPLN:   1  COORD STATUS:  Free
PHASE  1   2   3   4   5   6   7   8
COLOR          G                   G
PHONE 1:  A   B
PHONE 2:          C   V   M
          -- PGDN(A)/UP(B) FOR MORE --
```

In the example screen above A & B logs are ready to be called in on phone 1 and C, Volume & MOE logs are ready to be called in on phone 2.

POLLED LOCAL – This shows which intersection of 1-50 is currently being viewed. There are two screens per intersection. The **(A)** key will advance to the 2nd screen of this intersection. To go to another intersection key in the intersection number and press enter.

COMM STATUS – This shows communications status of the intersection. The options are: Active, Marginal, Lost & Not Used.

CONTROLLER STATUS – This is the current status controller. The options are;

Normal	Alarm 1	Monitor Flash
Controlled Flash	Alarm 2	Transit Priority
PE Input Failure	Alarm 3	Preemption
Power Up Flash	Alarm 4	Platoon Traffic
Controller Failure	Alarm 5	

CPLN – If the intersection is running in coordination this shows the current coord plan.

COORD STATUS – This is the current status of the coordinator. The options are: Free, Offset Seeking, In Transition & In Sync

COLOR – There is a display for each of phases 1-8. When the phase condition is (On) there will be a letter below the phase; G – Green, Y – Yellow & R – Red. Note that phase condition (On) means that the phase is in Green or Clearance.

PHONE 1 or 2 – There are two possible phone numbers that the master can call to send in log entries. These phone numbers are Phone 1 & Phone 2. Phone 1 & Phone 2 are the numbers of phone lines connected to a computer running NWSCentral, via a phone MODEM. There are 5 logs (A, B, C, Volume & MOE) that can be called in by the master. Turning on one of 10 TOD circuits, at an intersection, will cause the local to tell the master that it is ready to call in logs associated with that TOD circuit. *If it is desired to have a particular log type called a particular phone as soon as an event is logged then leave the relevant circuit on all of the time.*

TOD Circuits to Enable Reporting		
Log	Phone 1	Phone 2
A	105	106
B	107	108
C	109	110
Volume	111	112
MOE	127	128

The master will call NWSCentral and report logs if four things are true:

1. NWSCentral is in monitor mode.
2. The master is in mode (2) polling.
3. One or more locals have log entries (A, B, C, Volume & MOE) that are stored.
4. The locals referenced in 3. also have a relevant TOD circuit turned on.

By example if it is desired to have the 10 intersections in a system call in A logs to phone 1 and Volume, & MOE logs to phone 2 between 02:00 to 03:00 do the following.

1. In the day program of each intersection turn on circuit 105 from 02:00 to 02:10. In this example it is assumed that there would not be many entries in the A log. The master will see that there are A logs waiting to be called in and will dial NWSCentral on phone 1, make connection and report the logs.
2. In the day program of each intersection turn on circuits 112 & 128 from 02:10 to 03:00. In this example it is assumed that there are a large number of Volume & MOE logs, so more time is allotted to transmit these logs. The master will see that there are Volume & MOE logs waiting to be called in and will dial NWSCentral on phone 2, make connection and report the logs. *Note: The user should*

determine the usual size of the logs and program log reporting periods that are long enough.

Page Down (**A**) to view **SYSTEM DETECTOR** for current Intersection

A local intersection can have up to 8 of its 32 local detectors assigned as system detectors. This screen show the status of a local intersection's eight system detectors when the associated Local ID number is displayed. To view other intersections, either page down (press "A"), page up (press "B"), or enter a specific local ID number.

```
 POLLED LOCAL:   2<  SAMPLE PERIOD:     46s
SYS DETECTOR      1      2      3      4
      VOLUME     13     15      0      0
   OCCUPANCY     14     15      0      0

SYS DETECTOR      5      6      7      8
      VOLUME      0      0      0      0
   OCCUPANCY      0      0      0      0
```

This screen only has meaning if the master is accumulating system detector data because it is in one of three system modes:

1. Platoon Progression
2. Proactive Plan Selection
3. Split Variant Operation

SAMPLE PERIOD – This is an active timer of the current sample period for accumulating system detector data. In Platoon Progression this is the count-up timer of the current cycle length at the master. In PPS & SVO this is a one minute count-up timer.

VOLUME – This screen shows the data, as it is being accumulated, for the 8 system detectors at the intersection. This is the vehicles actuations that have been accumulated to this point in this sample period.

OCCUPANCY – This is the varying raw occupancy over the detector in percent to this point in this sample period.

Press escape to return to System Run Menu

Select 3. to view **MASTER SYSTEM DETECTORS 1-4**

```
MASTER SYS DETECTOR   SAMPLE PERIOD:   65s
MAST SYS DET #      1      2      3      4
  LOCAL INT #       2      2      2      2
SYSTEM DET #        1      2      3      4

      VOLUME        8      9      9     10
  OCCUPANCY        11     12     22     12
        --PGDN(A)/UP(B) FOR MORE--
```

Page Down (**A**) to view 3 more **SYSTEM DETECTOR** screens 5-8, 9-12, 13-16

A master can have up to 16 master system detectors. Each of these detectors comes from a System Detector at a Local. This screen shows the volume and occupancy of four of the master's sixteen master system detectors. To view other master system detectors, page down (press "A").

MASTER SYS DET # – The master system detector being viewed. In the 1st screen it is 1-4. In the subsequent screens it is 5-8, 9-12, & 13-16.

SAMPLE PERIOD – This is an active timer of the current sample period for accumulating system detector data. In Platoon Progression this is the count-down timer of the current cycle length at the master. In PPS & SVO this is a one minute count-down timer.

LOCAL INT # – This is the number of the local intersection that is the source of this detector.

SYSTEM DET # – This is the system detector number of this detector at the local intersection where this detector is reporting from.

VOLUME – This screen shows the data for the 4 of the 16 master system detectors. This is the vehicles actuations that have been accumulated to this point in this sample period.

OCCUPANCY – This is the varying raw occupancy over the detector in percent to this point in this sample period.

Press escape to return to System Run Menu

Select 4. to view **PROACTIVE PLAN SELECTION / SPLIT VARIANT RUN SCREEN**

```
PROACTIVE PLAN ACTIVE:   8 Inb          SV:   9
MODE CALLED: Inb    INBOUND       OUTBOUND
SMOOTH VPLUSKO        2126            1159
VPLUSKO TMR:  35  I-O SLOK:   8    SVI TMR:   4
I-O VPLUSKO %: 183      VPLUSKO PEAK:  2139
VPLUSKO TTMR:   0  ADJ VPLKO TARGET:  1325
AVERAGE VPLUSKO:      0 AVERAGE TTIMER:   0
TOD CKTS 177-179= Avg/Inb/Outb to Enable
```

PROACTIVE PLAN ACTIVE – When one of the three PPS circuits is active and PPS has chosen a coord plan, the number of the coord plan chosen will be display followed by:

Inb – Inbound
Out – Outbound
Avg – Average

If none of the three PPS circuits are active, or if one is active and a PPS plan has not yet been selected the display will be:

0 None

SV (Split Variant) – When one of the two SVO circuits is active and SVO has chosen a coord plan, the number of the coord plan will be displayed. Shows the coord plan selected by Split Variant Operation.

MODE CALLED – When one of the three PPS circuits is active one of the following displays is shown:

Inb – Inbound
Out – Outbound
Avg – Average

To assist understanding the next two values a fragment of the PPS/SVO run screen is shown below:

```
                      INBOUND       OUTBOUND
SMOOTH VPLUSKO         1464            812
```

INBOUND SMOOTHED VPLUSKO – When PPS and/or SVO is active this shows the smoothed average VPLUSKO of the Inbound master system detectors (1-4). If any of the four detectors is not assigned or is failed then it is not used in the calculation of this value.

OUTBOUND SMOOTHED VPLUSKO – When PPS and/or SVO is active this shows the smoothed average VPLUSKO of the Outbound master system detectors (5-8). If any of the four detectors is not assigned or is failed then it is not used in the calculation of this value.

VPLUSKO TMR – When PPS or SVO is active the smoothed VPLUSKO values are updated every minute. This is a 60 second timer that counts down to the next calculation of smoothed VPLUSKO values. At this point the PPS plan selection calculation is also done.

- **I-O TTMR (TRANSITION TIMER) <u>or</u> I-O SLOK (INBOUND/OUTBOUND 2ND LOOK) – I-O TTMR:** After the Inbound or Outbound circuit comes on there is a 60 minute period where it seeks to find a point at which the directional ratio exceeds a set value. When this point is reached then the system then transitions to the chosen direction either Inbound or Outbound. **I-O SLOK**: After a coord plan is selected by Inbound or Outbound Proactive Plan Selection there is a second, and last look at directional VPLUSKO, to see if the correct plan was selected. This look occurs 20 minutes after the initial plan selection. This timer shows the current value of this 20 minute countdown timer.

SVI TMR or SVO TMR – When either Split Variant Inbound or Outbound Operation is active a split variant selection can be made every 4 minutes. This timer shows the current status of this 4 minute countdown timer. If neither Inbound nor Outbound TOD circuit is active then the display is 'SV' and the timer is blanked out.

I-O VPLUSKO % – When the VPLUSKO TMR times down to zero the newly calculated VPLUSKO values are divided to get a ratio which is displayed here as a percentage.

PPS Circuit Active	Formula
Inbound	(Inbound VPLUSKO/Outbound VPLUSKO) * 100
Outbound	(Outbound VPLUSKO/Inbound VPLUSKO) * 100

VPLUSKO PEAK – When either Inbound or Outbound PPS is active the peak VPLUSKO value attained is shown here. By example if the Inbound circuit is on and the highest value attained was 2319, 2319 would be displayed here, the value of this display will be locked in for diagnostic purposes until a new PPS Inbound or Outbound period is entered. This value is used in the exit calculation when leaving Inbound or Outbound PPS. 70% of this value is used for

determining when to exit Inbound or Outbound mode. If neither Inbound nor Outbound TOD circuit is active then the value is ‘0’.

VPLUSKO TTMR – VPLUSKO Transition Timer - When PPS or SVO becomes active smoothed VPLUSKO values are needed to do their respective calculation. This is a 5 minute countdown timer that is loaded if neither PPS nor SVO had been active previously. As this timer times down its 5 minutes master system detector data is acquired and PPS or SVO plan selection is not allowed.

ADJUSTED VPLUSKO TARGET – When PPS is active, and no plan selection has yet been made, there is a gradually increasing target for the centroid of the medium cycle length range. This target is shown here. Once PPS plan selection has been made, the value of this display will be locked in for diagnostic purposes until a new PPS Inbound or Outbound period is entered.

AVERAGE VPLUSKO – When PPS Average is active this shows the average of the Inbound Smoothed VPLUSKO and the Outbound Smoothed VPLUSKO. If the Average TOD circuit is not active then the value is ‘0’.

AVERAGE TTIMER – Average Transition Timer - When a plan selection is made, either on entering or during PPS Average, a 30 minute transition timer is loaded. While this timer is timing down no further transitions to an Average plan or Free are allowed.

Press escape to return to System Run Menu

Select 5. to view **PLATOON PROGRESSION LOGS**

```
PLATOON LOG:   ALL/1/2:  1   LOG ENTRY:    11<
RECORDS STORED:   11   ENTER 0   TO CLR LOG
CYCLE-LENGTH OFSET-ADJ DATE      TIME
        76         1.03   10/11/04  07:24:39
        75         1.00   10/11/04  07:23:23
        75         1.00   10/11/04  07:22:08
        79         1.00   10/11/04  07:20:53
        83         1.00   10/11/04  07:19:34
```

ALL/1/2 – Set this address to (0, 1, or 2). Setting the address to (0) will display all logs. Setting the address to (1) will display log entries that occurred later than the time that pointer 1 was set. Setting the address to (2) will display log entries that occurred later than the time that pointer 2 was set.

LOG ENTRY – This is the number of the most current log entry that is currently being displayed. This value, and thus the current 5 log entries that are displayed, can be changed by using the **A-Advance Key** to display the 5 logs that are earlier. Conversely by using the **B-Back Key** the 5 logs that are later display can be displayed.

RECORDS STORED – This works in concert with the **ALL/1/2** field. When **ALL-0** is selected in the **ALL/1/2** field, this is the absolute number of logs stored. When

1 is selected in the **ALL/1/2** field, this is the number of logs stored that are above pointer 1. When **2** is selected in the **ALL/1/2** field, this is the number of logs stored that are above pointer 2. Entering a 0 in this field will clear the logs or reset a pointer.

- **ALL/1/2** — **Result of Entering 0**

ALL/1/2	Result of Entering 0
0-ALL	Clear the logs
1	Reset Pointer 1
2	Reset Pointer 2

CYCLE-LENGTH – This is the cycle length calculated at the entry intersection.

OFFSET-ADJUSTMENT – This is the Offset Adjustment calculated at the master based on the smoothed VPLUSKO of the two mid-system critical detectors. As the roadway becomes more congested, the VPLUSKO of these detectors rise, and the Offset Adjustment rises from 1.0 towards a limit of 1.5.

DATE & TIME – This is the date & time that the log entry was generated.

Log Storage & Manipulation – When Platoon Progression is active the master will store a log entry each time an entry intersection goes to the coord phases Yellow. The time difference from the last Yellow is the cycle length. A total of 2,000 logs can be stored at the master. When the 2,001st log entry is made the oldest log is erased and this entry becomes the newest entry. These logs can be viewed at the master controller or at two different sites that are running NWSCentral. One site might be a City agency and the other might be a State agency. Both wish to conduct different studies of the operation of the system. However once an agency retrieves logs it doesn't want to retrieve the same logs the next time. To accommodate this there are two pointers associated with the log file in the master. Each agency is assigned a pointer, 1 or 2. This is assignment is done in NWSCentral under Setup on the Setup Agency tab. There is a check box labeled 'When Retrieving Messages Reset Pointer 2'. As an example the City computer running NWSCentral would not have this box checked and would thus reset Pointer 1. The State computer running NWSCentral would have this box checked and would thus reset Pointer 2. Please note that there no way to actually erase the logs via NWSCentral. The logs can only be cleared at the master, as described above.

Press escape to return to System Run Menu

Select 6. to view **PROACTIVE PLAN SELECTION / SPLIT VARIANT LOGS**

```
PPS/SVP:          ALL/1/2:  1<   LOG ENTRY:  84
RECORDS STORED:    84   ENTER 0 TO CLR LOG
IVPLKO   OVPLKO  PPS#SVP#  DATE      TIME
  756      909     2    0  10/11/04  18:10:00
  878      956     2    0  10/11/04  18:05:00
 1089     1145     2    0  10/11/04  18:05:00
 1190     1369    15   16  10/11/04  18:00:00
 1214     1454    15   16  10/11/04  17:55:00
```

ALL/1/2 – Set this address to (0, 1, or 2). Setting the address to (0) will display all logs. Setting the address to (1) will display log entries that occurred later than the time that pointer 1 was set. Setting the address to (2) will display log entries that occurred later than the time that pointer 2 was set.

LOG ENTRY – This is the number of the most current log entry that is currently being displayed. This value, and thus the current 5 log entries that are displayed, can be changed by using the **A-Advance Key** to display the 5 logs that are earlier. Conversely by using the **B-Back Key** the 5 logs that are later can be displayed.

RECORDS STORED – This works in concert with the **ALL/1/2** field. When **ALL-0** is selected in the **ALL/1/2** field, this is the absolute number of logs stored. When **1** is selected in the **ALL/1/2** field, this is the number of logs stored that are above pointer 1. When **2** is selected in the **ALL/1/2** field, this is the number of logs stored that are above pointer 2. Entering a 0 in this field will clear the logs or reset a pointer.

- **ALL/1/2** — **Result of Entering 0**
  - 0-ALL — Clear the logs
  - 1 — Reset Pointer 1
  - 2 — Reset Pointer 2

IVPLKO – This is the Inbound VPLUSKO.

OVPLKO – This is the Outbound VPLUSKO.

PPS# – This is the current plan being called for by Proactive Plan Selection.

SVP# – This is the current plan being called for by Split Variant Operation.

DATE & TIME – This is the date & time that the log entry was generated.

Log Storage & Manipulation – When either Proactive Plan Selection and/or Split Variant Operation is active the master will store a log entry every five minutes. Note that these logs are a snapshot of the current VPLUSKO and plans

called for. The actual point at which a plan change is made is not recorded here. It should however be recorded in one of the Schedule logs (A, B, C or R) by logging 'Coord Running/Free'. A total of 2,000 logs can be stored at the master. When the 2,001st log entry is made the oldest log is erased and this entry becomes the newest entry. These logs can be viewed at the master controller or at two different sites that are running NWSCentral. One site might be a City agency and the other might be a State agency. Both wish to conduct different studies of the operation of the system. However once an agency retrieves logs it doesn't want to retrieve the same logs the next time. To accommodate this there are two pointers associated with the log file in the master. Each agency is assigned a pointer, 1 or 2. This is assignment is done in NWSCentral under Setup on the Setup Agency tab. There is a check box labeled 'When Retrieving Messages Reset Pointer 2'. As an example the City computer running NWSCentral would not have this box checked and would thus reset Pointer 1. The State computer running NWSCentral would have this box checked and would thus reset Pointer 2. Please note that there no way to actually erase the logs via NWSCentral. The logs can only be cleared at the master, as described above.

System Run Screens, Con't

The following run screens are only visible if the controller is a master and is in Master Mode: 1. Master Mode 1 was modified in Rev 1.0.0 to include polling local controllers for the status of Internal Logic relay bits. The Master Mode is further described and set on the comm setup screen, see the chapter on Communications and Reports.

From Run Mode Menu select 0. **LOCAL COMM/RELAYS** to see the status of local communications (these screens desribed previously under System Run Screens). Page down to view the **Local Relay Status** at any or all 50 local controllers.

```
--LOC RELAYS--SYS RELAYS: X      X
LOC  1 2 3 4 5 6 7 8 LOC  1 2 3 4 5 6 7 8
  1  X                  2
  3        X            4
  5                     6
  7                     8
  9                    10
         -- PGDN(A)/UP(B) FOR MORE --
```

This screen shows the source of active Internal Logic relay bits. It also displays the active relay bits that are being transmitted system-wide, in the upper right hand corner. These bits can be set by a local controller when a user defined set of conditions are met. The bit status is shared throughout the system, allowing other local controllers to take user defined actions. For more information on the programming and use of local relays, see the chapter on Internal Logic.

This page left intentionally blank.

Program Mode
Controller

Technical terms used conform to definitions presented in TS1-1989, but the manual does not duplicate those definitions. Therefore, the user is encouraged to obtain a copy of the TS-1 standard. Terms specific to the Voyage product are defined in the **Glossary**.

Basic Phase Service Concepts

The Voyage software will allow phase rotation in either a single ring or a dual ring configuration. A particular configuration can utilize up to eight phases, but only those phases programmed as “Phases Used”. Phases are served in the order dictated by the phase sequence, as long as demand for the phases is present. The Voyage software makes a “This Phase Next” (T∅N) decision at the beginning of the yellow change interval (though the decision can occur as late as the end of red clearance) and will commit to the next phase. If no other phases are in demand, the current phase will “rest in green” (unless Red Rest is used) until demand for an alternate phase occurs, then a T∅N decision will be made and the current phase will advance to yellow.

Demand for phase service can come from a variety of sources, including:

Activation of a detector input

Activation of a pedestrian input

Phase recall (Min recall, max recall, soft recall, ped recall)

Coordinated Operation (Min Recall placed on Coord Phases)

These sources of demand can be activated by external inputs, internal time clock circuits, internal Service Plans, internal manual overrides and Internal Logic programming.

During normal operation, phase termination can occur because of Gap-out (no demand for the length of the Passage Time, along with conflicting demand), Max-out (Max Green timer times out, along with conflicting demand) or Force-Off (the internal coordinator places a Force-Off on the phase). Other infrequent reasons for phase termination include preemption, activation of External Start, and activation of Interval Advance.

Ring

A Ring is an ordered sequence of mutually exclusive phases. Only one phase in a Ring may display right-of-way indications (G, Y, R) at a time. Phases rotate in order through the defined sequence, from phase 1 to phase 2 to phase 3, etc., then back to phase 1 after the last phase is serviced. Phases can be skipped if no demand exists. Figure 5 is an example of single ring phasing.

Figure 5: Typical 4 Phase Intersection w/Single Ring Sequence

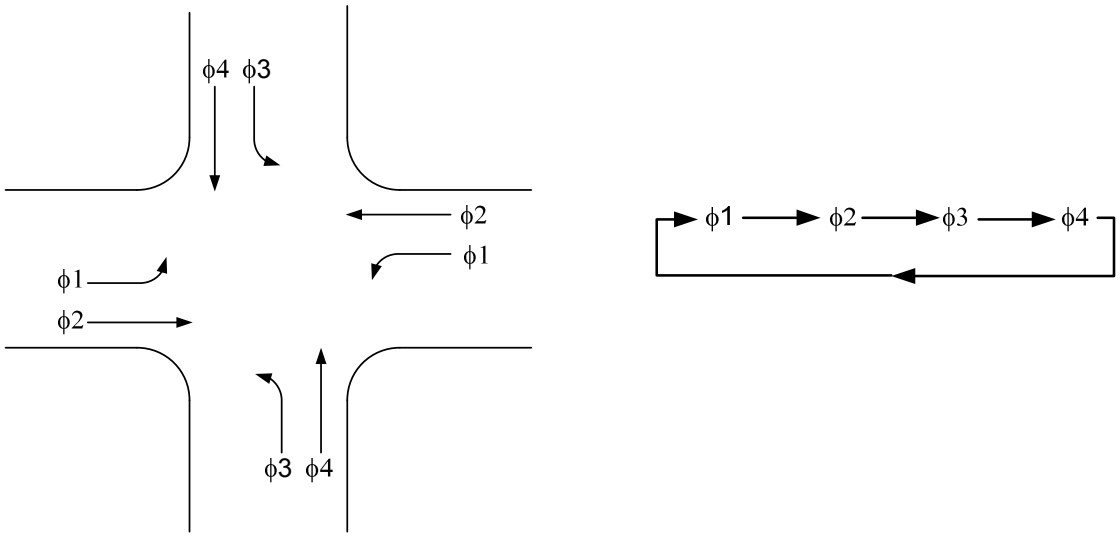

Dual Ring

A Dual Ring sequence has two interlocked rings in which the phases are arranged to time in a preferred order and where concurrent timing is allowed, subject to barrier restrictions. The basic rules for dual ring operation are:

1. No two phases in the same ring can time together

2. A phase in one ring can time with any phase in the opposite ring as long as both phases are on the same side of the barrier. In the standard dual ring sequence the allowable combinations are: 1-5, 1-6, 2-5, 2-6, 3-7, 3-8, 4-7 and 4-8.

3. Both active phases on one side of the barrier must clear through red clearance before crossing to the opposite side of the barrier.

4. In the case where two phases are about to cross the barrier, and one phase is green and the concurrent phase in the other ring has timed-out, the timed-out phase will go to a rest state, subsequently clearing when the other phase times-out.

5. One phase at a time may be served in a dual ring configuration if there is no demand for phases in the opposite ring. If only a single phase is being served, any compatible phase in the opposite ring is eligible for immediate service. However, if “Dual Entry” is in effect, two phases at a time will be served. Dual Entry causes the controller to place a user defined call on a phase in the opposite ring in the absence of a “real” call.

Figure 6: Typical Eight Phase Intersection with Dual Ring Sequence

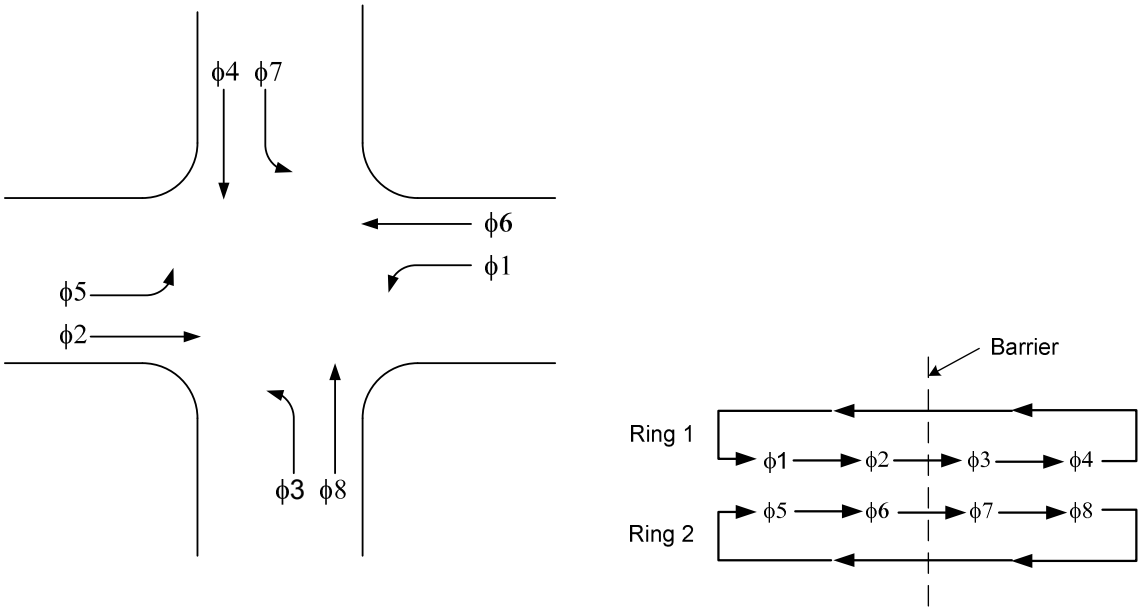

Barrier

The Barrier is a dividing line, crossing both rings, separating compatible phase combinations. Usually, the barrier divides phases associated with one street, i.e. East/West, vs. North/South.

Overlap

An overlap is a separate movement of traffic which depends on other phases (parent phases) for its timing and operation. The overlaps are generated by up to 12 sets of generic overlap drivers (labeled OLA, OLB, etc, up to OLL). Each set of overlap drivers consists of a Red, Yellow and Green output. The user selects the parent phases that are assigned to the needed overlaps.

The following is an example of overlap uses and functions. OLA is set up as a 1+2 overlap, i.e. it overlaps phases 1 and 2. When either phase 1 or 2 is green, overlap A is green also. In addition, if phase 1 clears directly from phase 1 to 2, or from phase 2 to 1, the overlap will remain green through the clearance period and through the next phase green. If however, the next phase is not part of the overlap, for example phase

2 is clearing to phase 3, the overlap will also clear (i.e. time yellow and red) with the clearing parent phase. The overlap outputs borrow the yellow and red clearance timing from the clearing parent phase.

Figure 7: Typical Overlap Configuration – 3 Phase

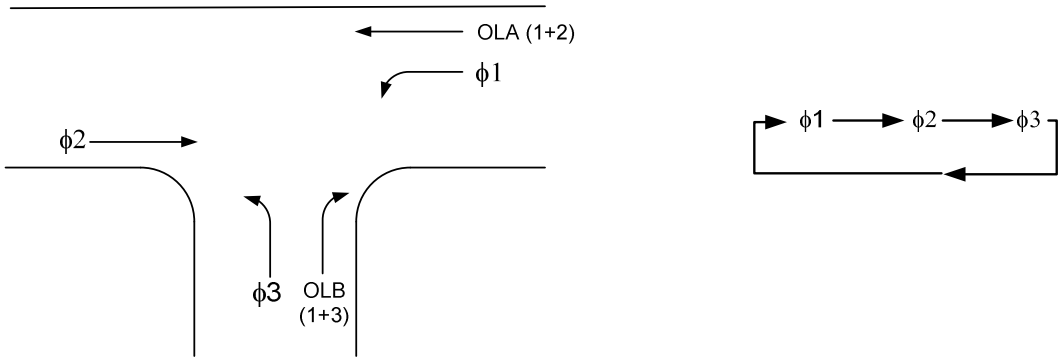

There are two conditions which cause an overlap to clear independently from its parent phases, preemption and overlap extension programming. In either of these cases, the overlap needs to have additional programming for yellow and red clearance timing since it can not share the parent phase clearance times. In preemption programming and overlap extension programming, there is the opportunity to program separate overlap clearance times.

T∅N Decision

The “This Phase Next” decision is made at the end of the green interval. This decision determines which phase should be serviced next. The decision is made on a per ring basis (i.e. one decision for each ring) and is influenced by the sequence in effect and the serviceability of the candidate phases in terms of call status, phase omits, etc. Once the controller makes a T∅N decision to service a phase, it is committed to do so; phase omits will not prevent the next phase from being served. Only internal preemption or a restart of the controller can override a T∅N decision.

Volume Density

The term Volume Density actually incorporates two separate processes; Variable Initial and Gap Reduction.

> **Variable Initial** allows the minimum green period to be extended depending on the number of queued vehicles. It is controlled by the Seconds per Actuation setting (S/A). Variable Initial operates when the associated phase is red. When a vehicle passes over a detector the variable initial tabulation begins with each successive actuation adding to the previous. The tabulation begins at zero and will only lengthen the minimum green period when the sum

exceeds the normal minimum green setting. For example, the normal min green is five seconds and the S/A setting is two seconds. Only after the third actuation (during red) when the sum is six seconds will the min green be lengthened. Each additional S/A actuation will lengthen the min green by two seconds (8, 10, 12, etc.) possibly up to Max Variable Initial (Max VI) setting. **NOTE:** S/A is only meaningful if the detector is back from the stop bar. Otherwise, no vehicles would pass over the detector during red.

Gap Reduction allows the gap (passage timer value) to be reduced during the green phase. The reduction period does not begin until the Time Before Reduction (TBR) timer times-out. Once it begins, it will reduce the gap at a steady rate, using the formula (Passage – Min Gap/TTR). The time used for the total reduction process is the Time to Reduce (TTR). Min Gap is the lowest level to which the passage timer will reduce.

Figure 8: Gap Reduction Diagram

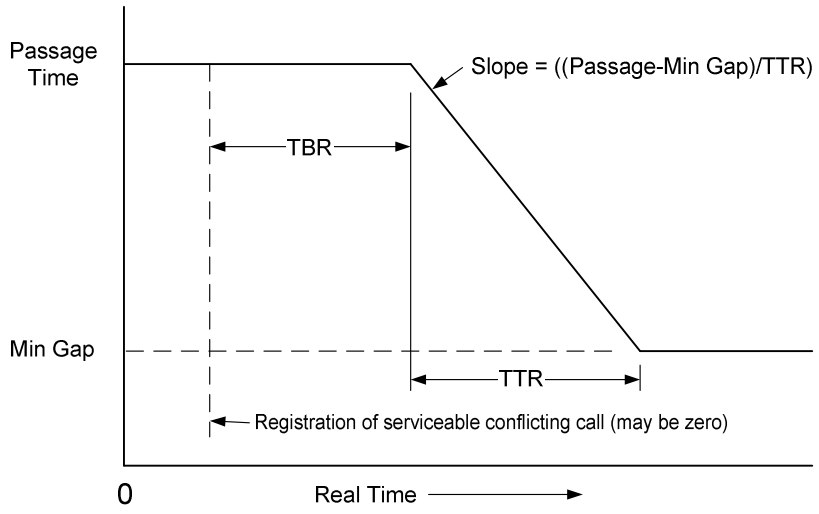

When a phase gaps-out at a reduced gap, one of three things occurs:

1. If Last Car Passage is in effect, the controller commits to gapping-out, but will time one full passage timer for the last car.

2. If Last Car Passage is not in effect, but Recall Phase is in effect, the phase is placed on min recall for the next service.

3. If neither Last Car Passage nor Recall Phase is in effect, the phase will simply gap-out with no recall on the phase.

Gap Reduction with Last Car Passage has been used at high speed intersections in an attempt to prevent vehicles from being caught in a dilemma zone. Gap reduction can also be an effective way to begin a phase with a long passage time, where vehicles are moving slowly, and then move to a shorter time when they are moving at

the flow rate. Gap reduction is a good way to obtain timely operation, while eliminating complaints and inefficiencies which might arise from long passage times.

Simultaneous Gap-Out Inhibit

All phases on one side of the barrier must wait for one another before crossing the barrier (they clear together). For instance, if phase 2 gaps-out, but phase 6 is still extending, then phase 2 will rest-in-green. Not only will it rest, but in normal operation its passage timer can be reset and begin timing again. In other words, a phase could rest until the opposite phase is about to gap-out, receive a detector actuation, and then be extended. This could happen back and forth between the rings and could effectively lengthen the phase. For example, phase 2 would need to gap-out and go to rest and then phase 6 would need to gap-out before phase 2 receives a new actuation. If this is done for the main street it will potentially lengthen the time of main street service, but it will minimize the possibility of catching a vehicle in a dilemma zone.

Simultaneous Gap-Out Inhibit disallows a phase's passage timer from re-starting once it has timed-out completely. This results in quicker operation, since once a phase gaps-out it stays that way and as soon as the other ring gaps-out, the barrier is crossed. Since the resting phase cannot reset its passage timer, phase termination is more likely to occur with a vehicle in the dilemma zone.

Conditional Service

The efficiency of an intersection can be increased if a left turn (odd phase) is allowed re-service after the even phase, prior to crossing the barrier. There are two distinct cases to be considered; one is during Free operation and the other is during coordinated operation. In Free operation **Conditional Service** is used to allow an odd phase to be re-serviced after the even phase, prior to crossing the barrier. In coordinated operation **Coord Late Left Turn** is used to allow an odd phase to be serviced after its normal force off has been reached. **Coord Late Left Turn** is described later in this manual. When **Conditional Service** is enabled it is allowed under the following conditions:

1. The controller is in Free operation.
2. The controller is in sequence 1 (Quad Left Turn) or sequence 7 (Lead/Lag).
3. Both left turn phases are leading on the side of the barrier using Conditional Service.
4. The even phase in the same ring has gapped out and is resting.
5. There is a call across the barrier (otherwise conditional service is unnecessary because the controller will return to the odd phase).
6. The even phase in the opposite ring is still extending and there is enough time in its max timer. This time must be equal or greater than the special conditional service max timer and the even-phase-same-ring's clearance time.

When a phase is conditionally serviced it cannot extend beyond the special conditional service max time. When the phase clears, it will cross the barrier with the opposite-ring-even-phase (unless Conditional Reservice is enabled and there is time for reservice to occur).

For example, an intersection running a standard eight phase dual ring sequence, as diagrammed previously in Figure 6, has conditional service in effect for phases 1 and 5. The conditional service max time is set at ten seconds, while phases 2 and 6 have 30 second max times. Phases 2 and 6 each have a total of 5 seconds of clearance (yellow and red). Phases 2 and 6 are in green and extending while there is a call for service across the barrier. Phase 6 gaps-out at the point which phase 2 has timed only 15 seconds of its max time. In this case, there is enough time to conditionally service phase 5 because there is 15 seconds left in the phase 2 max timer. This is equal to phase 6 clearance (5 seconds) plus the conditional service max time (10 seconds) and therefore is enough to allow conditional service. If there had been less than 15 seconds left in the phase 2 max timer, conditional service would not have been allowed. **NOTE:** Although the conditionally serviced phase now has a 10 second max timer, it can gap-out before that point.

5-Section Head Logic: (X Omits Y), Anti-Trap & Yellow Blanking

A left turn movement at an intersection can be either permitted during the through movement green or controlled by a special left turn signal. If the movement is controlled by a left turn signal there are two options. The first option is to have a 3-Section signal dedicated to the left turn movement with all indications being arrows. This is a protected left turn. The second option is to have a 5-section signal with three ball indications, left turn yellow arrow and left turn red arrow. This is a protected/permitted left turn.

5-Section left turn signals must have a leading left turn phase. X Omits Y, Anti-Trap and Yellow Blanking are allowed with Sequence 1 & with Sequence 7.

Figure 9: 8 Phase Intersection with 5-Section Left Turn Heads

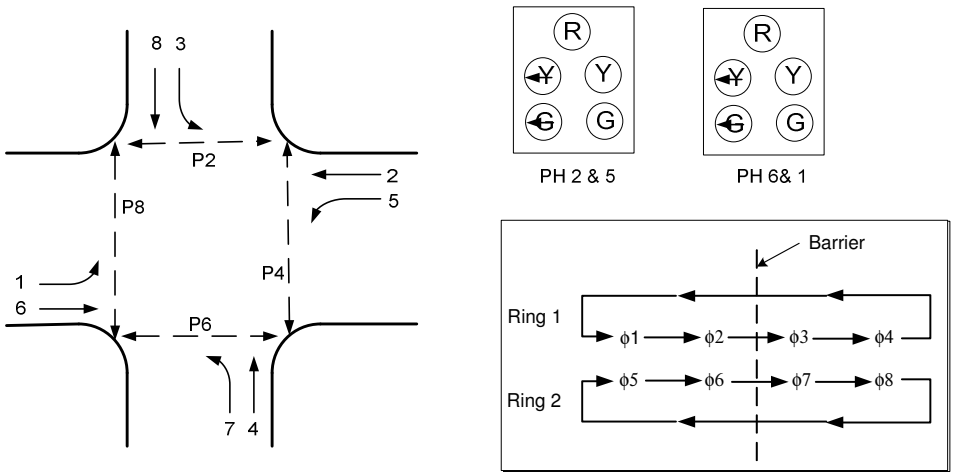

X Omits Y

This is used with the four combinations of a through movement and its adjacent left turn. One of the four combinations is (2 & 5). If phase 5 is called while phase 2 is green, the call to phase 5 is masked out until phase 2 is not green. Further, option (1) will place a calls on the through phases on the other side of the barrier (4 & 8) or (3 & 7) if phases 4 and 8 are not enabled. This causes either phases 4 and 8 or 3 and 7 to be served with at least Min Green before moving to serve the call on phase 5. Alternately by using option (2) no calls are placed on the other side of the barrier. This prevents movement from phase 2 & 6 Green directly to serve phase 5.

X Omits Y	Call on Phase	Place Calls on Phases Using Option 1
6 & 1	1	4 & 8
8 & 3	3	2 & 6
2 & 5	5	4 & 8
4 & 7	7	2 & 6

Left turn movements which have a 5-section protected/permitted operation should have delay on their associated detectors. This signal, if on a main street, would rest in a green ball. The delay allows the first left turning vehicle to arrive on green ball, detect a gap in opposing traffic and then turn left. If the vehicle turning left exceeds the delay time, then the signals will move to serve phases 4 and 8 before going back to service phase 5. This will prevent the 5-section signal from going to a green arrow directly from a green ball.

X Omits Y	Add Delay for Phase
6 & 1	1
8 & 3	3
2 & 5	5
4 & 7	7

Anti-Trap

This feature eliminates the trap problem caused by some implementations of protected and permitted left turns. *The problem is described like this: If a vehicle arrives on phase 1, then phase 2 will eventually go Yellow in anticipation of going to the green arrow for phase 1. The trap problem exists for a vehicle approaching phase 5. This vehicle sees the parallel through movement, phase 2, go yellow and could falsely assume that phase 6 has also gone yellow. This vehicle could then turn left in front of a phase 6 vehicle assuming it is going to slow down and stop.* To prevent this problem, phase 5 would be enabled as the Trap Protected Phase. With Anti-Trapping enabled a call on phase 1 would cause phases 2 and 6 to go yellow at the same time (assuming no calls exist across the barrier). After phase 6 runs through its Red Revert time it will go back to green. The default

controller Red Revert time of 2.0 seconds should be increased, by placing a value of about 3.0 in the Red Revert address to give an effective Red Revert of 5.0 seconds. The left turn advance detectors should have a short delay of about 3 seconds. The left turn stopbar loops should have a longer delay of 12 – 20 seconds.

Yellow Blanking

If a signal is displaying a green ball and green arrow simultaneously, i.e. phase 2 and phase 5, it can receive a call to cross the barrier, such as a call on phase 4. If the Yellow Blanking for phase 5 is enabled the signal will go to a phase 2 yellow ball while the phase 5 yellow arrow is dark.

Sequence Selection

The Voyage software is capable of running eight types of sequences for dual ring timing, sequential operation or a combination thereof. The selection of the desired sequence is accomplished by choosing a sequence option (data range is from 0 – 7). The following sequence patterns are available:

Sequential – Option 0

Sequential operation allows only one phase to be serviced at a time. A minimum of two phases up to eight phases may be enabled.

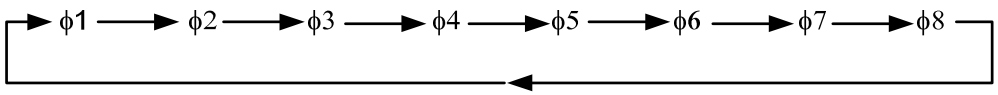

Standard Quad Left Turn – Option 1

Quad left turn operation allows two phases to time concurrently (one in each ring). The Voyage software follows standard convention which requires that Barriers exist to prevent right-of-way timing of conflicting phases.

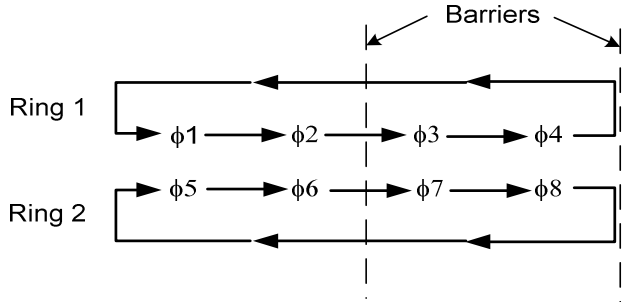

Special Sequence A w/ Lead/Lag – Option 2

Allows dual ring lead/lag timing on the left side of the barrier and sequential timing on the right. Lead/Lag makes it possible to reverse the sequence of phase pairs 1-2 and/or 5-6. See Option 7 for further description of lead/lag operation.

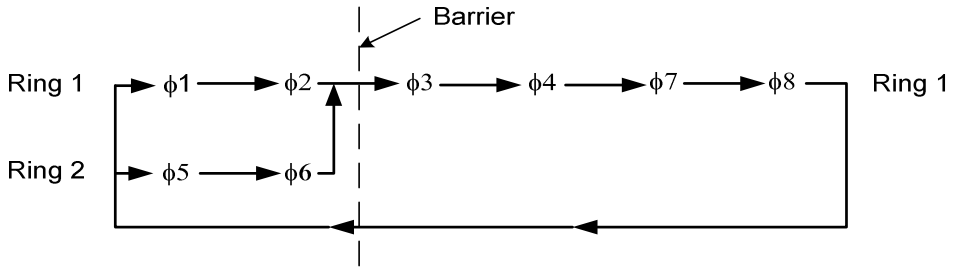

Special Sequence B – Option 3

Allows special dual ring timing on the left side of the barrier and sequential timing on the right .

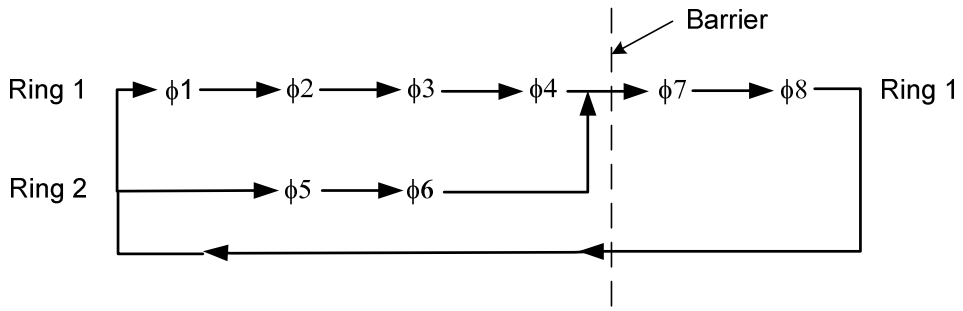

Special Sequence C – Option 4

Allows special dual ring timing on the left side of the barrier and sequential timing on the right.

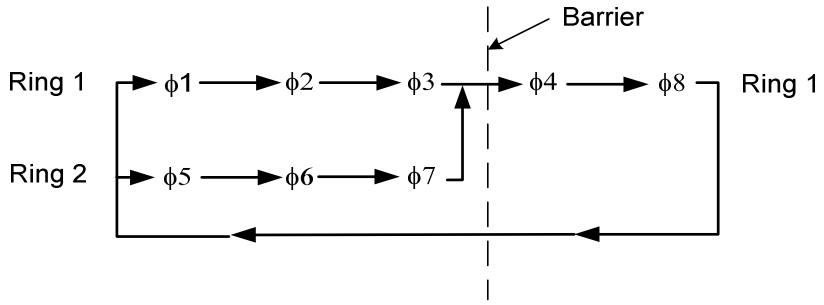

Special Sequence D – Option 5

Operates as two independent 4 phase, sequential controllers for two intersections (i.e. phase 2 and phase 8 can be green at the same time).

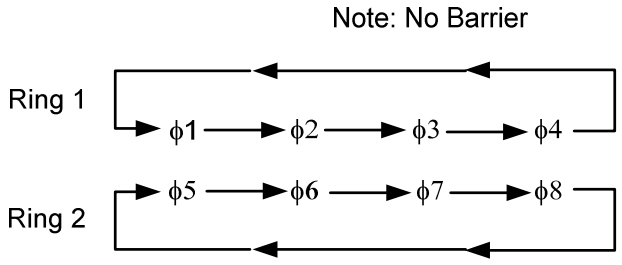

Special Sequence E w/ Lead/Lag – Option 6

This sequence is the opposite of Special Sequence #1. It allows dual ring lead/lag timing on the right side of the barrier and sequential timing on the left. Lead/Lag makes it possible to reverse the sequence of phase pairs 3-4 and/or 7-8. See Option 7 for further description of lead/lag operation.

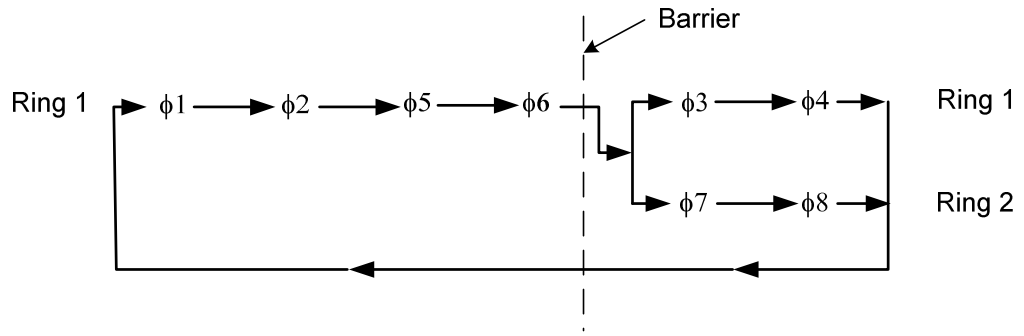

Exclusive Phases and Other Special Sequences

Exclusive phases are phases that operate independantly. For example, say that phase 1 is to be exclusive. It can be accomplished by using Special Sequence A and inserting overlaps into the sequence, as shown below:

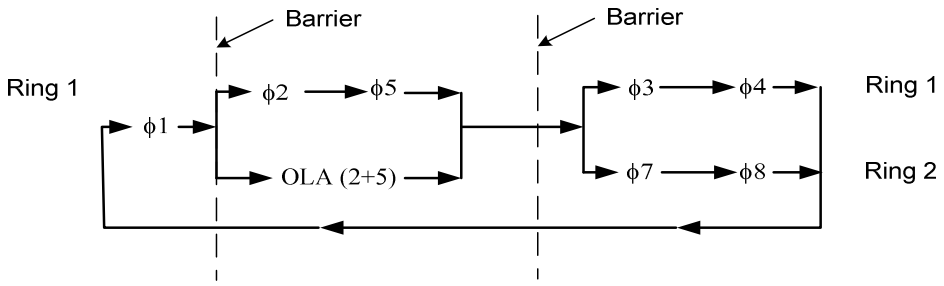

Many other unique sequences can be created by starting with an existing sequence and modifying it using overlaps, ped overlaps, and if needed, Internal Logic.

Lead/Lag – Option 7

Lead/Lag makes it possible to take a standard dual ring sequence and reverse the phase sequence on a phase pair basis. The phase pairs (1-2, 3-4, 5-6, 7-8) when reversed, will lag the odd phase behind the even phase. The Voyage software allows each phase pair to be in one of three states; No Reversal (Code 0), Always Reversed (Code 1) or Reverse by TOD/Coord (Code 2). Reverse by TOD/Coord is the only method of changing the basic controller sequence during operation.

The following table lists all 16 possible Lead/Lag combinations:

Legend:

W — Pair 1&2, 0=Lead Odd, 1=Lag Odd, 2=TOD
X — Pair 3&4, 0=Lead Odd, 1=Lag Odd, 2=TOD
Y — Pair 5&6, 0=Lead Odd, 1=Lag Odd, 2=TOD
Z — Pair 7&8, 0=Lead Odd, 1=Lag Odd, 2=TOD

0 0 0 0

1 2	3 4
5 6	7 8

0 0 0 1

1 2	3 4
5 6	8 7

0 0 1 0

1 2	3 4
6 5	7 8

0 0 1 1

1 2	3 4
6 5	8 7

0 1 0 0

1 2	4 3
5 6	7 8

0 1 0 1

1 2	4 3
5 6	8 7

0 1 1 0

1 2	4 3
6 5	7 8

0 1 1 1

1 2	4 3
6 5	8 7

1 0 0 0

2 1	3 4
5 6	7 8

1 0 0 1

2 1	3 4
5 6	8 7

1 0 1 0

2 1	3 4
6 5	7 8

1 0 1 1

2 1	3 4
6 5	8 7

1 1 0 0

2 1	4 3
5 6	7 8

1 1 0 1

2 1	4 3
5 6	8 7

1 1 1 0

2 1	4 3
6 5	7 8

1 1 1 1

2 1	4 3
6 5	8 7

Restrictive Phase Pairs

Restrictive Phase programming prevents a pair of selected phases from displaying right-of-way timing simultaneously. This is necessary when the geometry of a particular intersection causes a conflict between two phases which do not normally conflict. For example, in the case diagrammed below, the side street left turn phase's conflict with one another. One of the left turns needs to lag and they need to be restricted from displaying together.

Figure 10: Restrictive Phase Example

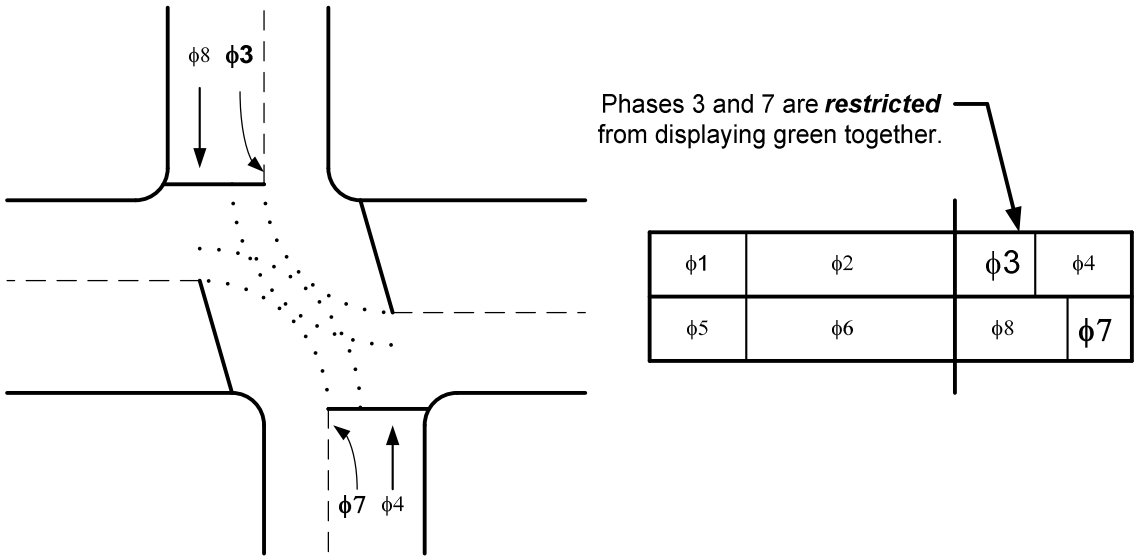

The following rules apply to a restrictive phase pair:

- The two restricted phases must be on the same side of the barrier.
- Lead/Lag sequence (Option 7), or Special Sequence A, or Special Sequence E must be in use.
- One phase must be in Ring 1 and the other in Ring 2.
- One phase must be a leading phase and the other must be a lagging phase.

There can only be one restricted pair on one side of the barrier.

When restricted phases are being used, one phase will always be served in each ring, when the controller is on the side of the barrier that has a restricted phase pair. In the example above, if the controller is resting in phases 2 and 6 and a call is registered for phase 7, the controller will clear phases 2 and 6 and then serve phases 4 and 7. Similarly if the call had been registered for phase 3, the controller will clear phases 2 and 6 and then serve phases 3 and 8.

Controller Programming Screens

To make changes to Controller programming, bring up the MAIN MENU display by pressing the **NEXT** key.

```
--MAIN MENU--

1.RUN MODE        3.UTILITIES

2.PROGRAM MODE

-- AUX Switch ON = Stop Time --
--USE F KEY FOR HELP--
```

Select 2. **PROGRAM MODE**

```
--PROGRAM MODE MENU--

1.SECURITY CODE  5.PREEMPTION     8.I/O
2.CONTROLLER     6.COMM/REPORT      CONFIG
3.COORDINATION   7. TRANSIT       9.INTERNAL
4.TIME CLOCK        PRIORITY        LOGIC
                                  0.SYSTEM
```

Note: The selection “0.System” is only displayed if the controller has been programmed to operate in system mode 2. See the chapter on Communications and Reports.

Select 1. **SECURITY CODE**

(This screen only appears if the security code has been disabled).

```
1. RETURN TO PROGRAM MODE
2. LOAD NEW SECURITY CODE
--WHICH WILL BE REQUIRED IN FUTURE--
```

Select 2. **LOAD NEW SECURITY CODE**

```
ENTER SECURITY CODE:
```

Enter a value from 0 to 9999, 0 disables the security code requirement. If a security code has been entered into the controller and has been forgotten, there is a backdoor entry which can be obtained from Northwest Signal Supply, Inc.

Press **ESC** (Prior Menu) to return to the **PROGRAM MODE MENU**.
Select 2. **CONTROLLER PROGRAM MODE MENU**

```
     --CONTROLLER PROGRAM MODE MENU--

1.LOCK/REC/MXOUT REC    5.INITIALIZE/FLASH/
  INH/COND PED/FRE        POWER-UP FLASH/
  WLK REST/DIS IMT        FIRST ALL RED/
2.PHASE TIMING            SOFT FLASH
3.PHASES USED/SEQ       6.OVERLAPS/FYLTA
4.DETECTORS             7.OPTIONS
```

Select 1. **MEMORY/RECALL**

```
X = Active            PHASE FUNCTIONS
FUNCTION              1 2 3 4 5 6 7 8 CURSOR
YEL LOCK              X
MIN RECALL
MAX RECALL              X         X
PED RECALL                  X             <
RED LOCK                      X
          --PGDN(A)/UP(B) FOR MORE--
```

To enable functions by phase, use the arrow keys to move the cursor to the appropriate function row then press a number to toggle a phase function on or off (0 = clear all, 1-8 = toggle phase, 9 = enable all). Use the **E** key for or arrow keys for entering the data. To cancel a database entry change before entering the new data, use the **C** key to restore the previous database value.

YELLOW LOCK – Call during yellow or red interval is remembered until the phase is serviced.

MIN RECALL – Phase will always service phase minimum green. Additional green is subject to detector extensions.

MAX RECALL – Phase will always service the maximum time being used.

PED RECALL – Pedestrian phase serviced.

RED LOCK – Call during red interval is remembered until the phase is serviced.

Page Down (**A**) to continue programming **PHASE FUNCTIONS**

```
X = Active            PHASE FUNCTIONS
FUNCTION              1 2 3 4 5 6 7 8 CURSOR
MXOUT REC INH
SOFT RECALL                           <
FRE WALK REST
COND. PED               X         X
DISABLE IMT
          --PGDN(A)/UP(B) FOR MORE--
```

MXOUT REC INH – (MRI) Max-Out Recall Inhibit – When the phase either maxs-out or forces-off, a recall will not be placed on the phase. Under normal operation, a Min Recall is automatically placed on a phase that maxes out or forces off. An exception to this rule is when the max out or force off occurs but no passage/detector is active. In this case, no recall is applied and the termination is recorded as a gap out in the MOE log (if enabled). Note: The Max-Out Recall Inhibit function should only be used for phases that have stop bar detection.

SOFT RECALL – Similar to min recall except the phase is only serviced if no other real calls exist. Soft recall can be delayed by a user settable amount of time. See Controller Program Mode/Options.

FRE WALK REST – Free Walk Rest - When the pedestrian is serviced, the phase will rest at the end of walk until a conflicting call is registered. This function is used during free operation.

COND. PED – Conditional Pedestrian Service– This function is only enabled during Free operation and is disabled during coordinated operation (during coordination use the function called Late Ped). After a phase is Green it allows up to two additional pedestrian services after the receipt of a conflicting call. It is enabled on a per phase basis. The pedestrian can be re-serviced twice, as long as the pedestrian time is less than or equal to the remaining max time, and the phase green is extending due to a vehicle call. Thus in one period of phase Green the pedestrian could be initially serviced once, and then re-serviced twice. Pedestrian re-service means that the Walk timer will be immediately restarted as soon as a pedestrian call is registered.

DISABLE IMT – Disable Inhibit Max Termination - This function causes Inhibit Max Termination to be disabled by phase. Note: Inhibit Max Termination is activated by turning on TOD circuits 14 and 15.

Page Down (**A**) to program **PHASE TIMES**

```
                --PHASE TIMES--
INTERVAL    1    2    3    4    5    6    7    8
MGR         8<   10   8    8    8    10   8    8
PSG         4.0  4.0  4.0  4.0  4.0  4.0  4.0  4.0
YEL         4.0  4.0  4.0  4.0  4.0  4.0  4.0  4.0
RED         2.0  2.0  2.0  2.0  2.0  2.0  2.0  2.0
MX1         30   30   30   30   30   30   30   30
          --PGDN(A)/UP(B) FOR MORE--
```

To enter timing for the phase intervals, use the arrows keys to move the cursor to the appropriate location on the screen. Use the number keys for setting the time required. Use the **E** key or arrow keys for entering the data. To cancel a database entry change before entering the new data, use the **C** key to restore the previous database value.

MGR – Min Green – The shortest time the phase will display green unless allowed to be violated by preemption or external start.

PSG – Passage – The amount of time necessary between actuations to cause a gap-out condition. The passage timer is loaded as soon as the green begins. **NOTE**: MAX RECALL holds the passage timer at the full passage time unless volume density (gap reduction) is used, in which case the timer will decrement but will not cause a gap-out condition.

YEL – Yellow Change – The amount of time the phase will be in yellow clearance after the green. The range is restricted from 3.0-25.5 seconds. If values less than 3.0 are desired, the minimum yellow disable must be active for the phase.

RED – Red Clearance – The amount of time after the yellow change in which the phase will display red before allowing the next serviceable phase to turn green. The range is normally 0-25.5 seconds unless RED DEC. OFF for the phase is enabled, then the range is 0-255 seconds.

MX1 – Maximum Green I – The maximum amount of time which the phase is green if a conflicting call is present. If a conflicting call is not present the Maximum Green will be reset to its programmed value. This is used if Max II or Max Plans are not selected.

Page Down (**A**) to continue programming **PHASE TIMES**

--PHASE TIMES--

INTERVAL	1	2	3	4	5	6	7	8
MX2	30<	30	30	30	30	30	30	30
WLK	0	7	0	7	0	7	0	7
PCL	0	12	0	14	0	14	0	21
S/A	.0	2.1	.0	.0	.0	.0	.0	.0
TBR	0	11	0	0	0	0	0	0

--PGDN(A)/UP(B) FOR MORE--

MX2 – Maximum Green II – A second value of maximum green which can be called by the time of day scheduler or an input. This can also be overridden by Max Plan selection.

WLK – Walk – The time which the pedestrian signal will display walk when serving a pedestrian call.

PCL – Pedestrian Clearance – The time which the pedestrian signal will display flashing Don't Walk after the Walk interval. **NOTE**: There is a flashing Don't Walk through yellow feature under Options.

S/A – Seconds Per Actuation (Added Initial) – The variable initial green is reset to zero at the start of phase yellow. Each subsequent actuation which is received on a calling detector before the next green increments the variable initial by the amount set in S/A.

TBR – Time Before Reduction – A delay timer that begins at the start of the green phase. After the delay has timed-out then gap reduction begins. To be used with two other gap reduction functions: TTR and MIN GAP.

Page Down (**A**) to continue programming **PHASE TIMES**

```
                --PHASE TIMES--
INTERVAL    1    2    3    4    5    6    7    8
TTR         0<  10    0    0    0    0    0    0
MIN GAP     .0   .0   .0  0.5   .0   .0   .0   .0
MAX VI      0    0    0   18    0    0    0    0
MAX EXT     .0   .0   .0   .0   .0   .0   .0   .0
AUTO MX     0    0    0    0    0    0    0    0
          --PGDN(A)/UP(B) FOR MORE--
```

TTR – Time To Reduce – The time during which the effective gap is reduced from the Passage to the Minimum Gap. This time begins after Time Before Reduction. (To be used with two other gap reduction functions: TBR and MIN GAP).

MIN GAP – Minimum Gap – When gap reduction is used, minimum gap is the smallest value to which the effective gap can be reduced. This value will be reached after Time Before Reduction and Time To Reduce have timed-out. (Value should be less than the Passage).

MAX VI – Maximum Variable Initial – The maximum value of the variable initial green. (Always set greater than minimum green). Used in conjunction with Seconds Per Actuation (S/A).

MAX EXT – Variable Maximum Extension – Both Max Ext and Auto Max have to be set to enable this function. When enabled, one Max Ext will be added to the current max time whenever the phase max's-out twice in a row. Following that, each additional, consecutive max out will add another Max Ext value to the max time. Conversely, when the phase gaps-out twice in a row, a Max Ext will be subtracted from the current max.

AUTO MAX – Maximum Variable Maximum Green – Both Max Ext and Auto Max have to be set to enable this function. This must be set higher than any used maximums (including Max I, Max II and Max Plans 1-8). This provides the upper limit and the current programmed max value provides the lower limit (this includes max plans). This is disabled if failed max time is used. Auto Max can be disabled by turning on TOD circuit 142.

Page Down (**A**) to program **PHASES USED/SEQ**

```
X = Active              PHASE NUMBERS
FUNCTION                1  2  3  4  5  6  7  8 CURSOR
PHASES USED             X  X  X  X  X  X  X  X    <
RESTRICTED PHS
(MUST BE PAIRS)


            --PGDN(A) FOR SEQUENCE
```

To enable functions by phase, use the arrow keys to move the cursor to the appropriate function row then press the phase number to toggle the phase function on or off (X = on). Use the **E** key or arrow keys for entering the data. To cancel a database entry change before entering the new data use the **C** key to restore the previous database value.

PHASES USED – The phases used in the sequence selected.

RESTRICTED PHASE PAIRS – Phases selected must be from the lead/lag sequence (phasing/sequence = 7), or Special Sequence A or Special Sequence E on opposite rings and same side of the barrier. The phases must be a leading phase from one ring and a lagging phase from the opposite ring. See the discussion on Restricted Phases.

Page Down (**A**) to continue programming **PHASES USED/SEQ**

```
          THE PHASING/SEQUENCE IS 1<
0.SEQUENTIAL            2-6.SPEC SEQS A-E
1.QUAD LEFT TURN            7.LEAD/LAG

          --LEAD/LAG--      | 0.NO REVERSAL
PAIRS     1&2 3&4 5&6 7&8   | 1.ALWAYS REV
CODE       0   0   0   0    | 2.REV BY CLOCK
--PGDN/UP FOR MORE--        |   OR COORD
```

To enter phasing and sequence, use the arrow keys to move the cursor to the appropriate location on the screen. Use the number keys for setting the sequence and phase reversal. Use the **E** key or arrow keys for entering the data. To cancel a database entry change before entering the new data, use the **C** key to restore the previous database value. **IMPORTANT: The controller must be restarted to implement a new sequence, unless the Change Sequence feature is used (Program Mode/Controller Program Mode/Options/Change Sequence).**

Option #	Sequence Description	
0	SEQUENTIAL - 12345678/0.	(See diagram on page 89)
1	QUAD LEFT TURN – 12/56 + 34/78.	(See diagram on page 89)
2	SPECIAL SEQ A – 12/56 + 3478/0.	(See diagram on page 89)

3	SPECIAL SEQ B – 1234/56 + 78/0.	(See diagram on page 90)
4	SPECIAL SEQ C – 123/567 + 48/0.	(See diagram on page 90)
5	SPECIAL SEQ D – 1234/5678.	(See diagram on page 90)
6	SPECIAL SEQ E – 1256/0 + 34/78.	(See diagram on page 90)

LEAD/LAG (Option 7) – This is a QUAD LEFT TURN sequence, but allows 1&2, 3&4, 5&6, and 7&8 to change position within the sequence. The sequence can be fixed; 0 = No reversal, 1 = Always reversed. 2 = The pair within the sequence can also be reversed when selected by TOD/coord.

From the **CONTROLLER PROGRAM MODE MENU**
Select 4. **DETECTORS MENU**

```
        --DETECTOR PROGRAMMING MENU--
1.LOCK/INHIBIT/CALL/        3.VIDEO FAILURES/
  EXTEND/SWITCH               DET FAIL MONITOR
2.DELAY/STRETCH/            4.SYSTEM DETECTORS
  DISCONNECT/MODE           5.DETECTOR PLANS
                              2-4
                            6.DET SIMULATION
```

Select 1. **MEMORY/INHIBIT/CALL/EXTEND/SWITCH**

```
  --DET MEMORY-INHIB-CALL-EXTEND-SWITCH--
DET INP          1   2   3   4   5   6   7   8
YEL LOCK         0<  0   0   0   0   0   0   0
INHIBIT          0   0   0   0   0   0   0   0
CALL PH          1   2   3   4   5   6   7   8
EXTEND           1   2   3   4   5   6   7   8
SWITCH           1   2   3   4   5   6   7   8
          --PGDN(A)/UP(B) FOR MORE--
```

To program detectors, use the arrow keys to move the cursor to the appropriate location on the screen. Use the number keys for setting the Yellow Lock and Inhibit on or off (0=off, 1=on) and the Call/Extend/Switch phase required (phases 1-8, 0 = none). Use the **E** key or arrow keys for entering the data. To cancel a database entry change before entering the new data, use the **C** key to restore the previous database value.

YELLOW LOCK – This allows Yellow Lock on/off to be assigned at the input level, (the per-phase Yellow Lock on/off must be programmed off).

I**NHIBIT** – TOD circuit 117 allows this programming to be used to inhibit programmed detectors from being used.

CALL PHASE – This allows the programmed phase to be called when the phase is not green. The calling detector can also extend the phase if disconnect mode (mode 9 or 10) is enabled.

EXTEND – This allows the programmed phase to be extended when the phase is green.

SWITCH – This allows the programmed SWITCH phase to be extended when the SWITCH phase is green and the EXTEND phase is not green. Note: If it desirable to disable the call phase during detector switch operation, enable detector mode 12.

Page Down (**A**) to program the **DETECTOR DELAY-STRETCH-MODE**

```
      --DETECTOR DELAY-STRETCH-MODE--
DET INP      1    2    3    4    5    6    7    8
 DELAY       0<  10    0    8    0    0    0    0
STR/DIS     .0   .0   .0  1.0   .0   .0   .0   .0
  MODE      0    4    0    9    0    0    0   12
  MODE= 0=norm delay,  1-8=del when ph grn, 9=
       call ph ext grn/gap out. 10=call ph ext
    grn/time out.  11=COND. DEL.  12=call/swit.
```

To enable these detector modes, use the arrow keys to move the cursor to the appropriate location on the screen. Use the number keys for setting the Delay/Stretch/Disconnect time and mode required. Use the **E** key or arrow keys for entering the data. To cancel a database entry change before entering the new data, use the **C** key to restore the previous database value.

DELAY – If the detector becomes active while the phase is not green, the delay timer begins timing down. A call will not be placed on the phase until the delay timer has timed-out. If the detector input becomes non-active while the delay is timing, the call for service will not be registered on the phase, and the delay timer will be reset (range 0-255 seconds).

STR/DIS = STRETCH/DISCONNECT TIMER – This timer is a multi-purpose timer, the use of which is determined by the Detector Mode setting (range 0-25.5 seconds):

> If in Detector Mode 0 – 8, 11, or 12 then the timer is a STRETCH timer. This feature is only applied during green of the extend (or switch) phase. This timer allows the detector input on the phase to remain active for the STR/DIS time after the detector becomes inactive.
>
> If in Detector Mode 9 or 10 then the timer is a DISCONNECT timer. The EXTEND phase must be zero (this is ONLY a calling detector operation).

MODE = DETECTOR MODE – Mode 0 is for normal stretch and delay.

> Modes 1-8 have normal stretch and change the delay function to only be applied when a (Mode #) phase is green. For example if detector 1 calls

phase 1 and has a mode of 4, detector 1 will only be delayed if phase 1 is not green and phase 4 is green.

Mode 9 – This mode is sometimes called “Stop Bar Disconnect by Gap” because its primary use is to disable the stop bar detector upon finding a gap for the detector, after the start of the phase green. The detector has its own gap time which is the value in the stretch/disconnect timer. The disconnect timer is only active during the phase Green. The disconnect timer is loaded when the phase goes to Green. The disconnect timer begins decrementing when the detector is unoccupied. If the disconnect time has not timed out a subsequent call will reset the timer. The detector disconnect gap timer and the phase gap timer operate in parallel (if no other detector is active). When the detector disconnect gap timer has timed-out the detector will no longer extend the phase. The EXTEND phase must be programmed as zero (this is ONLY a calling detector operation). There is no stretch operation with a detector operating in Mode 9.

Mode 10 – This mode is sometimes called “Stop Bar Disconnect by Timer” because its primary use is to disable the stop bar detector at a fixed time after the start of phase green. The disconnect timer begins decrementing at the start of the green of the call phase. The detector has a maximum time which it can extend the phase. This maximum time is the value in the stretch/disconnect timer. During this time the detector works like a normal extend detector. The EXTEND phase must be programmed as zero (this is ONLY a calling detector operation). There is no stretch operation with a detector operating in Mode 10.

Mode 11 - Conditional Delay

During Free Operation - The delay timer starts immediately and any opposing phase that is green will immediately start timing its max timer. This feature was designed with a low volume side street approach in mind. It may be desirable to delay the side street call, in order to give the higher volume main street proper emphasis, but NOT cause the side street vehicle to wait any longer than the main street max time.

During Coordinated Operation – The delay timer, for a non-coord phase, starts immediately. Assume that phase 4 is a non-coord phase with Mode 11 delay. If the delay is still timing one second before the end of the phase 4 permissive a momentary phase 4 call will be placed causing the coord phases (2 & 6) to go to Yellow to allow phase 4 service. This feature was also designed with a low volume side street approach in mind. It may be desirable to delay the side street call, in order to prevent an immediate Yellow on the main street, but NOT cause the side street vehicle to skip service because its permissive closed before the end of its delay.

Mode 12 – This mode disables this detector from calling the call phase when the switch phase is Green and the extend phase is not Green.

Mode 13 – This powerful detector mode exists to provide lane-by-lane gap out capability. This technique has shown to provide improved efficiency at congested intersections.

Smaglik, E., D. Bullock, and T. Urbanik, “An Evaluation of Lane by Lane Vehicle Detection for Actuated Controllers Serving Multi-Lane Approaches," *Transportation Research Record*, #1925, TRB, National Research Council, Washington, DC, pp. 123-133, 2005.

A Mode 13 detector offers all normal detection functionality, but will disconnect if a gap out condition exists for this specific detector following Min Green (or Variable Initial). The normal Passage (or Min Gap) is used as the gap timer. If the Mode 13 detector is assigned to a coord phase, the gap out can not occur until after the yield point has been reached in order to support actuated coordination.

Page Down (**A**) to program the **DET FAIL SAMPLE PERIOD/VIDEO FAIL**

```
    --DET FAIL SAMPLE PERIOD/VIDEO FAIL--
    TIME      | 0-255 MINUTES, DETERMINES
     10<      | PERIOD FOR DET FAIL MONITORING
    0=DISABLE

VIDEO FAIL INPUT     1  2  3  4  5  6  7  8
   PHASE RECALL      1  2  3  4  5  6  7  8
          --PGDN(A)/UP(B) FOR MORE--
```

To enter a sample period use the number keys for setting the period required. Use the **E** key or arrow keys for entering the data. To cancel a database entry change before entering the new data, use the **C** key to restore the previous database value.

Video detection units can temporarily “fail” due to poor visibility or other issues. Many video processing units offer “fail” outputs that provide an indication when individual cameras are no longer providing reliable data. If these outputs are routed into Video Fail inputs in the controller, then, when active, alternative Fail Max times can be initiated. (See Max Plan programming). These outputs can also be tested using Internal Logic in order to take a user defined action. Video Fail events can be logged in a Schedule Log if so programmed (see Communication and Reports).

SAMPLE PERIOD – The sampling period determines the time over which all enabled detectors are monitored in a repetitive manner. This value relates to normal detector inputs and is NOT related to the Video Fail logic.

VIDEO FAIL PHASE RECALL – Associate a phase with each video fail input in use. When the video fail input is active, the programmed phase will be max recalled using the Fail Max time from the current Max Plan.

Page Down (**A**) to program the **DETECTOR FAIL MONITOR**

```
          --DETECTOR FAIL MONITOR--
DET        1   2   3   4   5   6   7   8
MODE       1<  1   0   0   1   1   0   0

DET        9   10  11  12  13  14  15  16
MODE       1   1   0   0   0   1   1   0
     ('0'=Do not Monitor Det, '1'=Monitor Det)
          --PGDN(A)/UP(B) FOR MORE--
```

To enable detectors for monitoring, use the arrow keys to move the cursor to the appropriate location on the screen. Use the **0**/**1** keys for setting the mode required.

The detector mode determines if the detector will be monitored for proper operation. Set all unused detectors, or those not requiring monitoring, to zero. If the detector fails with a recall phase programmed, the normal max (max 1 or 2) will be used unless a max plan is active. If a max plan is active, the failed max time will be used. The recall phase will be placed on max recall.

Page (**A**) Down to continue programming the **DETECTOR FAIL MONITOR**

```
  DET     1   2   3   4   5   6   7   8
PHASE     1<  1   0   0   5   5   0   0
  MIN       2   2   0   0   2   2   0   0
  MAX     100 100   0   0 100 100   0   0
  DET     9   10  11  12  13  14  15  16
PHASE     2   2   0   0   0   4   4   0
  MIN       2   2   0   0   0   2   2   0
  MAX     100 100   0   0   0 100 100   0
```

To enter detector fail phase recall and min/max thresholds, use the arrow keys to move the cursor to the appropriate location on the screen. Use the number keys for setting the value required. Use the **E** key or arrow keys for entering the data. To cancel a database entry change before entering the new data, use the **C** key to restore the previous database value.

PHASE (Recall Phase) – This is the phase placed on max failed recall if the detector fails. To get detector failure reports without max failed recall on a phase, set PHASE = 0. Logging is enabled under COMM/REPORTS menu item, FUNCTION SCHEDULING.

MIN (Minimum Threshold) – If minimum threshold is greater than zero, then a volume count of zero for the detector creates a NO ACTIVITY failure. Regardless of the thresholds, if the volume count is zero and the detector is active, then a CONSTANT CALL failure is created. If the volume counts are less than the MIN, but not zero, than a LOW THRESHOLD failure is created. To get NO ACTIVITY without LOW THRESHOLD failures, set MIN to 1 (range 0-999).

MAX (Maximum Threshold) – If the volume counts exceed the MAX, than a HIGH THRESHOLD failure is created (range 0-999). **NOTE:** Time clock circuits are available to enable/disable Min and/or constant call monitoring by TOD.

From the **DETECTORS MENU**
Select 4. **SYSTEM DETECTORS**

```
--SYSTEM DETECTORS--
SYS DETECTOR    1  2  3  4  5  6  7  8
LOCAL DETECTOR 17 18  0  0  0  0  0  0
(0-32, 0=NONE)
Use only the Local Detectors (1-32) that
 are needed by the master starting with
System Detector 1.
--PGDN(A)/UP(B) FOR MORE-
```

To enable system detectors, use the arrow keys to move the cursor to the appropriate location on the screen. Use the number keys for setting the value required. Use the **E** key or arrow keys for entering the data. To cancel a database entry change before entering the new data, use the **C** key to restore the previous database value.

SYS DETECTOR (System Detector) – A system detector is a local detector that can also be polled by the master for system operations. There are 32 local detectors, 8 of these local detectors can be assigned as a system detector. After being assigned as a system detector the local detector will still function as a local detector.

LOCAL DETECTOR – 1 of 32 local detectors that are used for operation of the local intersection.

From the **DETECTORS MENU**
Select 5. **DETECTOR PLANS 2-4**

```
--DETECTOR PLAN 2--
DET #     3   7   13  18  21  26  27  32
CALL PH   1   1   3   3   5   5   7   7
EXTEND    2   2   4   4   6   6   8   8
SWITCH    6   6   4   4   6   6   4   4
DELAY     5<  5   0   0   0   0   0   0
STR/DIS   .0  .0  .0  1.0 .0  .0  .0  .0
MODE      0   13  0   0   0   0   0   0
```

Detector Plans 2-4 are provided to allow dynamic changes in detector programming on up to eight individual detector inputs. The plans are enabled by activating TOD circuits 186 and 187. Detector Plan 2 = TOD 186, Detector Plan 3 = TOD 187, Detector Plan 4 = 186 and 187. TOD circuits may be activated manually, by TOD plan, by coord plan (see coord circuit mapping), or by Internal Logic.

From the **DETECTORS MENU**
Select 6. **DETECTOR SIMULATION**

```
--DETECTOR SIMULATION MODE--

              |0 = OFF
  MODE:  0< |1 = ENABLED



--PGDN(A)/UP(B) FOR MORE-
```

To enable/disable the detector simulator use a **1**/**0**. Use the **E** key or arrow keys to enter the data.

This data is not part of the normal database and is not uploadable or downloadable by NWSCentral PC software. This function is not intended for on-street use, but may be helpful to simulate actual conditions for a bench test environment. The simulated detectors will replace the actual detector inputs for all run mode screens except the connector I/O input screen, which represents the physical inputs.

The four settings per detector are used to approximate three conditions.

1. Steady State - Steady state is encountered in the middle of the Green cycle. In this state the volume and occupancy govern the synthetic input to the detector. All of the programmed detectors are randomized with respect to each other.

2. Queue Accumulation during Red – In this state the steady state flow is reduced as a queue builds up from the stopbar back towards the detector. The saturation rate governs the decrease in volume and the increase in occupancy.

3. Queue Dissipation during the early Green – In this state the flow is increased up to the steady state flow described above. The discharge rate governs the increase in volume and the decrease in occupancy towards the steady state described above.

Page Down (**A**) to continue programming **DETECTOR SIMULATION MODE**

```
   DET      1        2        3        4
VOLUME    350<     350      150      150
  OCC %     9        9        4        4
CALL/EXTEND
PHASES     1/1      1/1      3/3      3/3
SAT. %     100      45       100      20
DIS. %     1        4        1        5
        --PGDN(A)/UP(B) FOR MORE--
```

To enter volume, occupancy, saturation, & discharge requirements, use the arrow keys to move the cursor to the appropriate location on the screen. Use the number keys for setting counts/hour and the occupancy required. Use the **E** key or arrow keys to enter data. To cancel a database entry change before entering the new data, use the **C** key to restore the previous database value.

VOLUME – The number of detector actuations per hour, range 0-9999. Realistically the range is 0-2200. This is in the form of a continuous square wave. A value of 600 would create a pulse every 6 seconds. **NOTE:** If zero volume is used, the actual detector input can be used.

OCCUPANCY – The percent of the duty cycle of the detector simulator square wave, which is active. This simulates the time of a typical length vehicle passing over a typical length detector at a particular speed. If vehicle length is 20', loop length is 25' and speed is 30 mph, the volume is 600 vph; then the time to clear the loop is 1 second. The occupancy would then be 1/6 = 17%.

SAT. % (Saturation %) – The average percentage of time that the detector will be covered by a car during queue build up during Red. **If the detector is at the stopbar use a value of 100%.** As a detector is further away from a stopbar decrease the saturation %.

DIS. % (Discharge % Rate) – The rate at which the discharge percentage increases until steady state flow is arrived at. **If the detector is at the stopbar use a value of 1.** As a detector is further away from a stopbar increase the discharge towards a maximum value of 5.

An example of an 8 phase intersection with settings for detector simulation is shown on the next page.

Fig. 11a Detector Simulator

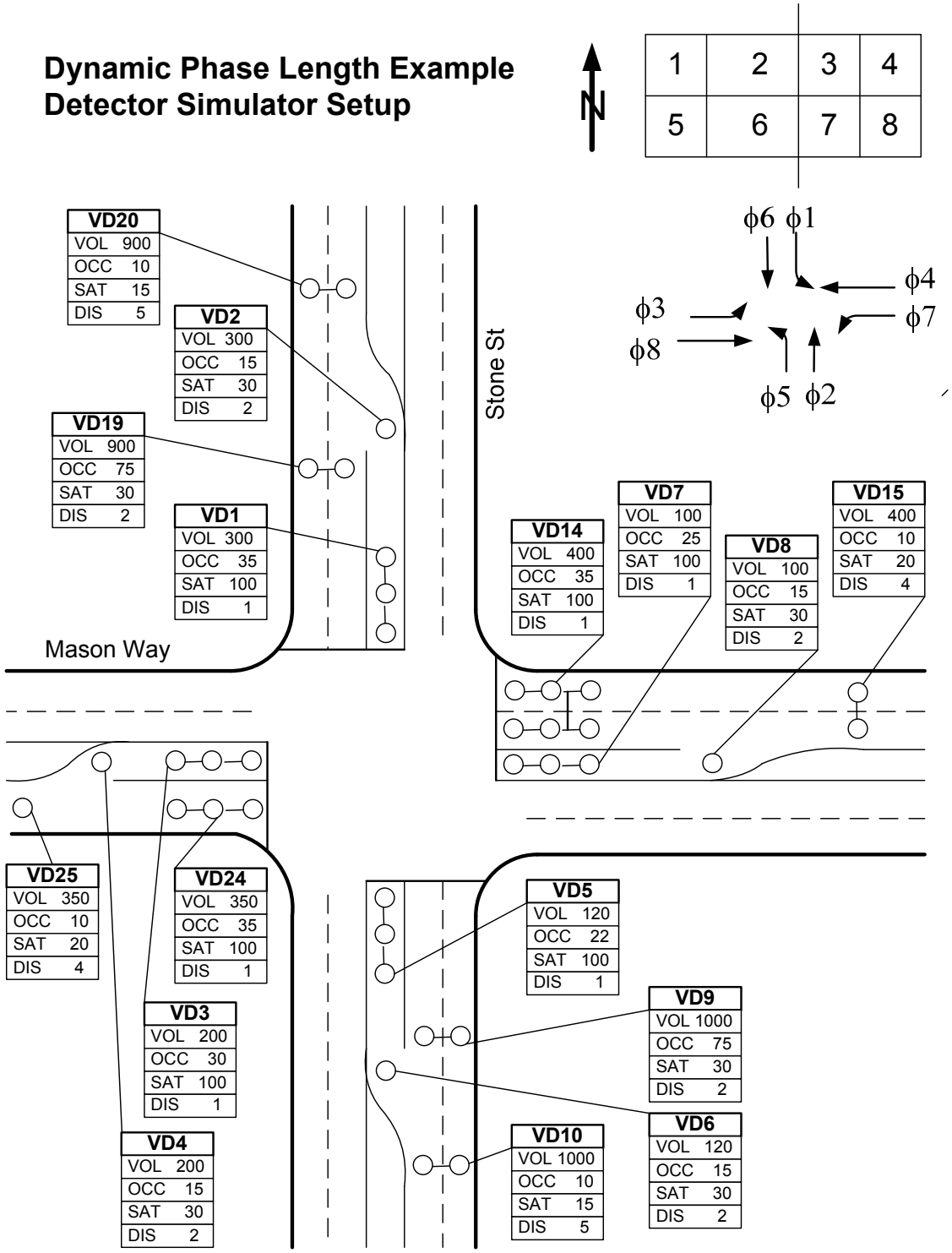

From the Detector Simulator screen, press **ESC** twice to return to the **CONTROLLER PROGRAM MODE MENU**

Select 5. **INITIALIZE/FLASH/POWER-UP FLASH/FIRST ALL RED**

```
      INIT    |ENTR FL   |EXIT FL   |INTVL0=RED
R1 PH     2<  |       2  |       2  |      1=YEL
R2 PH     6   |       6  |       6  |      2=GRN
INTVL     1   |       0  |       2  |
        --POWER UP/RESTART TIMINGS--
      .0  | POWER UP FLASH, RANGE: 0-25.5
     5.0  | FIRST ALL RED AFTER FLASH TIME
- - PGDN (A) TO SET SOFT FLASH--        (0-25.5)
```

To enter initialization/flash entry/flash exit phases and intervals, use the arrow keys to move the cursor to the appropriate location on the screen. Use the number keys for setting the phase and interval required. Use the **E** key or arrow keys for entering data. To cancel a database entry change before entering the new data, use the **C** key to restore the previous database value.

INIT – Initialization – The programmed phases will be displayed upon restart of the controller. The Initialization phases have to be compatible and must be in the correct ring. (If a ring does not have a phase, enter zero).

ENTR FL – Flash Entry Phases – These are the last phases serviced before entering controlled flash. Entry phases must be compatible and phases must be in the correct ring. (If a ring phase is not desired, enter zero). If no phases are programmed, the controller will go to Red Rest at its earliest convenience before going to flash. **WARNING: Soft Flash configuration must be programmed for the appropriate phases OR OUTPUTS WILL BE RED (as default).**

EXIT FL – Flash Exit Phases – When exiting controlled flash, these phases and intervals will immediately appear on the outputs. The phases must be compatible and in the correct rings. (If no ring phase is required, enter zero, at least one phase must be programmed).

POWER-UP FLASH – On power-up or keyboard restart, the intersection will display the Soft Flash configuration for this programmed value. **WARNING: Soft Flash configuration must be programmed for the appropriate phases and overlaps OR OUTPUTS WILL BE RED (as default). Also if Internal Logic outputs exist, and are not programmed, they will operate as if the controller wasn't in Soft Flash.**

FIRST ALL RED AFTER FLASH TIME – This is a one time red clearance after power-up or Soft Flash exit. This is used if the first phase display is yellow or red.

Page Down (**A**) to program **SOFT FLASH**

```
(0= DARK)          --SOFT FLASH--
   PH-OL      1   2   3   4   5   6   7   8   A   B
FL MODE       3<  4   3   4   3   4   3   4   3   4

   PH-OL      C   D   E   F   G   H   I   J   K   L
FL MODE       3   4   3   4   3   4   3   4   3   4
 (1=FLYWIG, 2=FLYWAG, 3=FLRWIG, 4=FLRWAG)
       --PGDN(A) TO SET ILO SOFT FLASH--
```

To enter flash modes for phases and overlaps, use the arrow keys to move the cursor to the appropriate location on the screen. Use the number keys for setting the flash mode required.

SOFT FLASH – These values are used for power-up flash and controlled flash to flash the phase load switch outputs for the appropriate intersection. 0 = DARK, 1 = FLYWIG = flash yellow wig, 2 = FLYWAG = flash yellow wag, 3 = FLRWIG = flash red wig, 4 = FLRWAG = flash red wag (WIG and WAG are opposite flash polarities). All pedestrian outputs are extinguished. **WARNING: Soft Flash configuration must be programmed for the appropriate phases OR OUTPUTS WILL BE RED (as default).**

ILO SOFT FLASH (Internal Logic Outputs) – For a few very specialized applications the internal logic will generate between 1 to 12 outputs. If any of the internal logic outputs are used then it might be necessary to program their operation for flashing conditions.

```
         --INTERNAL LOGIC SOFT FLASH--
OUTPUT        1   2   3   4   5   6
FL MODE       2<  2   1   1   0   0

OUTPUT        7   8   9  10  11  12
FL MODE       0   0   0   0   0   0
      (0=NORMAL, 1=DARK, 2=FLASH WIG)
         --PGDN(A)/UP(B) FOR MORE--
```

This screen is programmed in the same manner as the previous screen, with different options. O = Normal, 1 = Dark, and 2 = Flash WIG. During Soft Flash the controller continues to cycle normally and thus the internal logic continues also. By using option (0 = Normal) the internal logic output will continue in its normal fashion. Note that upon exiting controlled Soft Flash the controller will go to its flash exit interval.

From the Soft Flash screen, press **ESC** to return to the **CONTROLLER PROGRAM MODE MENU**
Select 6. **OVERLAP OPTIONS MENU**

```
          --OVERLAP OPTIONS MENU--

1.SET O/L A-L              4.(FUTURE)

2.EXT-CLR O/L A-L          5.PED OVERLAPS

3. (FUTURE)                6.FLASHING YELLOW
                             LEFT TURN ARROWS
```

Select 1. **SET O/L A-L**

```
PH     1  2  3  4  5  6  7  8  |0 = NO O/L
OL  A  0< 1  0  0  0  0  0  0  |1 = O/L PH
OL  B  1  0  0  0  0  0  0  3  |2 = 60 FPM
OL  C  0  0  0  0  0  0  0  0  |3 = NOT PED
OL  D  0  0  0  0  0  0  0  0  |
OL  E  0  1  0  0  0  0  0  0  | O/L E-L:
OL  F  0  0  0  0  0  1  0  0  |VALUE: 0/1
          --PGDN(A)/UP(B) FOR MORE--
```

```
PH     1  2  3  4  5  6  7  8  |0 = NO O/L
OL  G  0< 0  0  0  0  0  0  0  |1 = O/L PH
OL  H  0  0  0  0  0  0  0  0  |2 = 60 FPM
OL  I  0  0  0  0  0  0  0  0  |3 = NOT PED
OL  J  0  0  0  0  0  0  0  0  |
OL  K  0  0  0  0  0  0  0  0  | O/L E-L:
OL  L  0  0  0  0  0  0  0  0  |VALUE: 0/1
          --PGDN(A)/UP(B) FOR MORE--
```

To enter overlap setup, use the arrow keys to move the cursor to the appropriate location on the screen. Use the number keys for setting the overlap configuration required. Use the **E** key or arrow keys to enter data. To cancel a database entry change before entering the new data, use the **C** key to restore the previous database value. **IMPORTANT: The controller must be restarted to implement new overlap assignments, unless the Change Sequence feature is used (Program Mode/Controller Program Mode/Options/Change Sequence).**

Overlaps A-L can be configured to be green during specific phases (parent phases) if the phases are programmed with a **1**.

Overlaps A-D can be configured to be flashing green (60 flashes per minute) during specific phase greens if the phases are programmed with a **2**.

Overlaps A-D can be configured as “Not Ped” overlaps, they can only be green during the selected phases if the phase is not servicing the pedestrian movement for that phase. A “Not Ped” Overlap is configured by programming selected parent phases with a **3**. Note that this programming only allows Not Ped operation with the normal pedestrian movements associated with phases 1-8. It does NOT have any effect on pedestrian overlaps (see Not Ped Ped Overlaps).

Page Down (**A**) to program **EXT-CLR O/L A-L**

```
      GRN EXT  YEL  RED CLR  |GRN EXT BEGINS
O/L  A   2.5<   3.9    1.0   |AT START OF
O/L  B    .0     .0     .0   |PARENT PH YEL.
O/L  C    .0     .0     .0   |AT END OF GRN
O/L  D    .0     .0     .0   |EXT BEGIN O/L
O/L  E   4.0    4.0    1.0   |YELLOW.
O/L  F    .2    4.0    1.0   |RANGE 0-25.5
         --PGDN(A)/UP(B) FOR MORE--
```

```
      GRN EXT  YEL  RED CLR  |GRN EXT BEGINS
O/L  G    .2<   4.0    1.0   |AT START OF
O/L  H    .0     .0     .0   |PARENT PH YEL.
O/L  I    .0     .0     .0   |AT END OF GRN
O/L  J    .0     .0     .0   |EXT BEGIN O/L
O/L  K    .0     .0     .0   |YELLOW.
O/L  L    .0     .0     .0   |RANGE 0-25.5
         --PGDN(A)/UP(B) FOR MORE--
```

The extension allows the overlap clearance to lag the parent phase clearance if the overlap needs to clear. The overlap stays green until the green extension (GRN EXT) times out, then clears with its own yellow and red time. If the green extension = 0, then the overlap clears normally.

Page Down (**A**) to program **Advanced Warning Outputs**:

```
      AW  CONDOL  CONDOL   ADD  IAW= ADV
O/L E  1<      0       0     5  IWARN ENA,
O/L F  1       1       0     0  I0= OFF,
O/L G  1       1       0     0  I1= ON
O/L H  0       0       0     0  ICONDOL:
The Output is active during OL    I0-8
Extension/YEL/RED and ADD.        IADD:0-99
         --PGDN(A)/UP(B) FOR MORE--
```

```
      AW  CONDOL  CONDOL   ADD  IAW= ADV
O/L I  0<      0       0     0  IWARN ENA,
O/L J  0       0       0     0  I0= OFF,
O/L K  0       0       0     0  I1= ON
O/L L  0       0       0     0  ICONDOL:
The Output is active during OL    I0-8
Extension/YEL/RED and ADD.        IADD:0-99
         --PGDN(A)/UP(B) FOR MORE--
```

Advanced warning outputs can be used to warn approaching traffic that they need to decelerate and possibly stop at an upcoming traffic signal. Normally, this function is used where obstructions, like horizontal or vertical curves, block the view of the signals heads or standing queues of vehicles. The example shown in Figure 11b matches the programming shown in the Advanced Warning screens above. Note that the overlaps also need to be assigned and any overlap extensions/clearances programmed as described in the preceding paragraphs.

AW – Advanced Warning Enable – A “1” indicates that the overlap is being used for an advanced warning movement. A “0” means disabled.

CONDOL – Conditional Overlap for Advanced Warning – The termination of an Advanced Warning overlap can be forced to coincide with the termination of one or two other Advanced Warning overlaps. A problem occurs when the overlap extensions times differ, causing overlap movements to clear separately. The use of Conditional Overlap program solves this problem by using the largest extension value for all overlaps that are conditioned together. The overlap with the smaller extension time must be programmed with the Conditional Overlap(s) with the larger extension time. All overlaps conditioned together must have an extension time of at least 0.2 seconds. Enter "1-8" for overlaps E through L. Enter "0" if no Conditional Overlaps are used.

ADD – Advanced Warning Deactivation Delay – This value is timed from the beginning of the parent phase green, keeping the advanced warning output active. ADD provides time for queues to clear before deactivating the warning output. Range 0-99 seconds.

Fig. 11b Advanced Warning Example

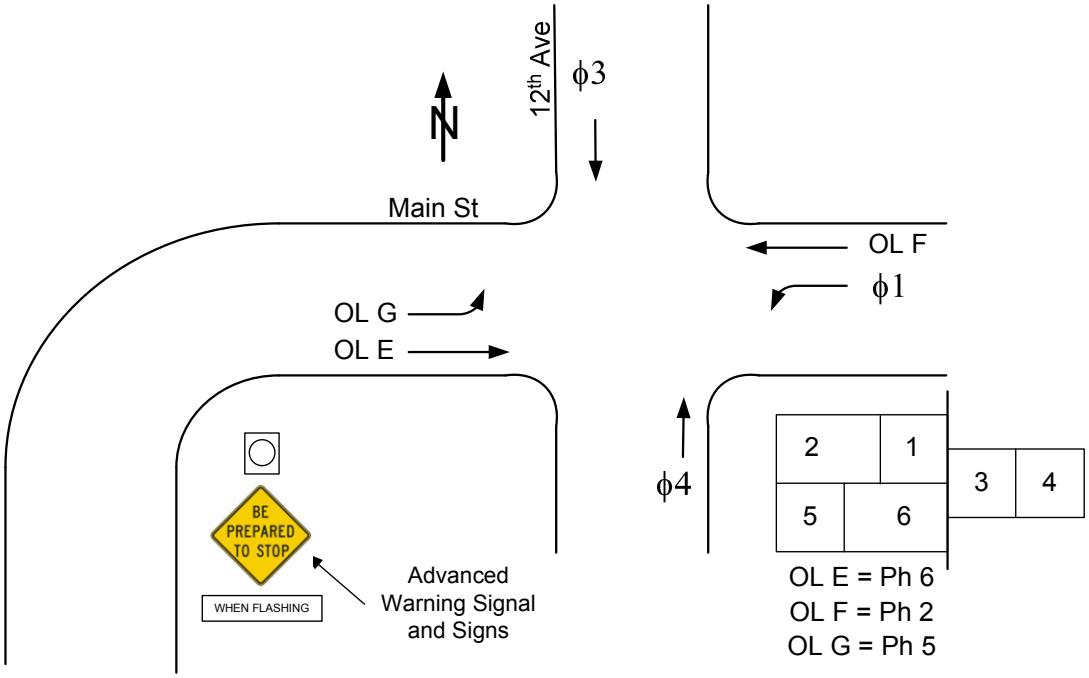

To use Advanced Warning, it is necessary to layout the phasing and outputs as follows:

- The normal vehicle phases that require warning must be replaced by overlaps. In other words, overlap outputs must be routed to the associated vehicle signals.

- The Advanced Warning output(s) should be routed to an advanced warning signal. An output could be simply tied to a load switch for a solid indication. If a flashing output is desired either use Internal Logic to flash the loadswitch output or utilize external flashing circuitry.

- Any vehicle phases that should clear at the same time as the advanced warning overlap should be brought out to the street as overlaps. This allows the Conditional Overlap logic to be used.

Page Down (**A**) to program **PED OVERLAPS**:

```
              --PED OVERLAPS--
PHASE                1 2 3 4 5 6 7 8 CURSOR
OVERLAP A                    X X       <
OVERLAP B
OVERLAP C
OVERLAP D
              X = PED OVERLAP
          --PGDN(A)/UP(B) FOR MORE
```

```
              --PED OVERLAPS--
PHASE                1 2 3 4 5 6 7 8 CURSOR
OVERLAP E                               <
OVERLAP F
OVERLAP G
OVERLAP H
              X = PED OVERLAP
          --PGDN(A)/UP(B) FOR MORE
```

Page Down (**A**) to program **PED OVERLAPS**:

```
              --PED OVERLAPS–

INTERVAL        A  B  C  D  E  F  G  H
WLK             5  0  0  0  0  0  0  0
PCL             17 0  0  0  0  0  0  0


          --PGDN(A)/UP(B) FOR MORE
```

Pedestrian Overlaps – This operation is a true pedestrian overlap. The intervals of Walk and Flashing Don't Walk can bridge between two or more phases. Thus the Walk and/or Flashing Don't Walk could be timing during the vehicle clearance intervals of Yellow and Red Clearance. If the phase next is not a parent phase of the ped overlap, the current phase will be held in Green until the pedestrian overlap timing is completed.

The normal pedestrian movements associated with phases 1-8 are still available when pedestrian overlaps are in use.

Pedestrian overlaps work with the following features:

1. Any sequence
2. Coordinated or Free
3. Preemption

Pedestrian overlaps **<u>do not</u>** work with the following features:

1. Conditional Ped (Late Ped in coordination)
2. Exclusive Ped
3. Preempt Priority Ped Return

NOTES:

1. Re-assign outputs as needed in order to use the pedestrian overlap outputs.
2. Re-assign inputs as needed in order to call a pedestrian overlap.

In the example below an intersection has a center median crossing in a wide street. Due to the median the south side pedestrian crossing is divided into two crossings. A pedestrian overlap is used to spread one of the crossings over phases 3 & 4.

Figure 12: Pedestrian Overlap Example

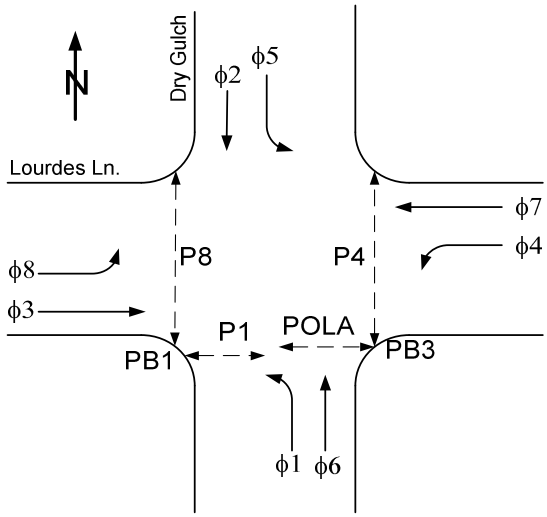

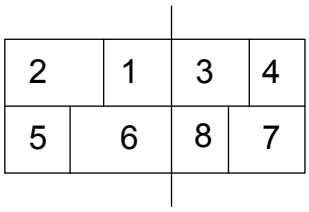

POLA = 3+4
POLA = 67'
P1 = 54'

Phase or Ped OL	1	A
Walk	5	5
Ped Clearance	14	17

Note: An internal logic program is used to enhance this example, but is not needed for basic ped overlaps. This logic package receives and processes the PB1 and PB3 pedestrian calls so that a pedestrian will be able to call both crosswalks in the needed order. In steps 1-20 a phase 1 ped call places a call to ped 1 & sets Latch #1. When Phase 1 Walk begins a 1.0 second timer is loaded, Latch #1 is reset. While the timer is timing down, with Latch #1 reset a call is placed to Ped 3 which calls Ped Overlap A. A similar set of instructions, 21-40, generate a Ped 1 call after PB3 is called and when Ped OL A Walk begins.

Entry	Value	Line Description	Sub Module Description
1	209	Set a latch if test string is true	
2	1	Latch #	Set latch #1 when ped detector #1 is activated.
3	22	Input test	
4	21	Input code - (1 Ped Det)	
5	208	Load a timer if test string is true, then decrement it when the test string is false	
6	1	Timer #	Load timer #1 with 1.0 seconds when latch #1
7	10	Timer value (1.0 seconds)	is set and phase 1 Walk is on. Decrement it when latch #1 is released by 1 Walk going
8	26	Test a latch	on.
9	1	Latch #	
10	20	And	
11	23	Output test	
12	61	Output code - (1 Walk)	
13	210	Release a latch if test string is true	
14	1	Latch #	Release Latch # 1 when phase 1 goes Walk.
15	23	Output test	
16	61	Output code - (1 Walk)	
17	206	Input on if test string is true	
18	23	Input code - (3 Ped Det)	Place ped 3 call during the 1.0 seconds
19	27	Test if timer is not timed out at 0	when timer #1 is loaded and counting down
20	1	Timer #	to zero.
21	209	Set a latch if test string is true	
22	2	Latch #	Set latch #2 when ped detector #3 is activated.
23	22	Input test	
24	1	Input code - (Ped OL A)	
25	208	Load a timer if test string is true, then decrement it when the test string is false	
26	2	Timer #	Load timer #2 with 1.0 seconds when latch #2
27	10	Timer value (1.0 seconds)	is set and phase Ped OLA Walk is on.
28	26	Test a latch	Decrement it when latch #2 is released by
29	2	Latch #	Ped OLA Walk going on.
30	20	And	
31	23	Output test	
32	241	Output code - (Ped OLA Walk)	
33	210	Release a latch if test string is true	
34	2	Latch #	Release Latch # 2 when Ped OLA goes Walk.
35	23	Output test	
36	241	Output code - (Ped OLA Walk)	
37	206	Input on if test string is true	
38	21	Input code - (1 Ped Det)	Place ped 1 call during the 1.0 seconds
39	27	Test if timer is not timed out at 0	when timer #2 is loaded and counting down
40	2	Timer #	to zero.

Page Down (**A**) to program **NOT PED PED OVERLAPS**:

```
          --NOT PED PED OVERLAPS--
PED OVERLAPS   A  B  C  D  E  F  G  H   CURSOR
VEH O/L A                  X             <
VEH O/L B
VEH O/L C        X
VEH O/L D
          X = NOT PED PED OVERLAP
         --PGDN(A)/UP(B) FOR MORE--
```

Not Ped Ped Overlaps allow a vehicle overlap movement (A-D), typically a right turn, to be cleared in order to safely serve a pedestrian overlap movement. To activate a Not Ped Ped Overlap, simply place an “X” in the matrix to associate the vehicle overlap (A-D) with the Ped Overlap (A-H). Both the vehicle overlap and the pedestrian overlap must be programmed as shown on the preceeding pages.

Page Down (**A**) to program **FLASHING YELLOW LEFT TURN ARROWS**:

FYLTA PH PAIRS	1-2	3-4	5-6	7-8
FYLTA ENABLE	4	0	0	0
EVEN OMITS ODD	0	0	0	0
DET SW ODD/EVEN	1	0	0	0
(0/1= DIS/ENA)				
RED TRANSITION	2.0	2.0	2.0	2.0
RED EXTENSION	1.0	0.0	0.0	0.0
RET TO GLTA	0	0	0	0

Flashing Yellow Left Turn Arrow (FYLTA) displays are a new form of protected/permitted or permitted/protected left turn control. Any or all of the four phase pairs can be used to operate a FYLTA display. The FYLTA is incorporated into an odd-phase signal head and it becomes active (flashes) whenever the even phase in the phase pair is green. The FYLTA function is supported in sequences 1 (Dual Ring) and 7 (Lead/Lag).

The software supports three output configurations; 3 output, 4 output and 5 output. The most typical configuration of outputs is the 4 output. From top to bottom the heads are a red arrow, yellow arrow, FYLTA, and green arrow. The FYLTA output must be assigned to an unused output pin. The normal odd-phase outputs are used to drive the other arrow sections.

TOD circuits are available to disable either the protected (green arrow) or permitted (FYLTA) portions of the display. A Phase Omit (circuits 41, 43, 45, 47) can be used to disable the protected movement. A Disable FYLTA (circuits 138-141) can be used to disable the permitted movement.

> **FYLTA Enable** – Enter a 3, 4 or 5 to enable the desired output mode. Mode 3 supports a 3 section head where the center section boths flashes and remains solid for the change interval. Mode 4 supports the most common 4 section

head display. When using mode 4 it is necessary to assign the FYLTA output to an unused output pin. Mode 5 supports a doghouse version where there are separate yellow change outputs for both the FYLTA and the green arrow. When using mode 5 it is necessary to assign output pins to both the FYLTA output and the FYLTA yellow change output. Note: The enabling of this function causes changes to the sequence and I/O of the controller, thus requiring a restart to take effect.

EVEN OMITS ODD – This feature applies a phase omit to the odd phase of a phase pair when the even phase is green (0 = Disable, 1 = Enable).

DET SW ODD/EVEN – When the odd phase is omitted (see Even Omits Odd), vehicle detections on the odd phase are switched to the even phase of the phase pair (0 = Disable, 1 = Enable).

RED TRANSITION – The time to start the FYLTA after the even phase of the phase pair turns green following the termination of the odd phase of the phase pair (2.0 s to 25.5 s).

RED EXTENSION – The time to start the FYLTA after the even phase of the phase pair turns green following the termination of a phase NOT in the phase pair (0 s to 25.5 s).

RET TO GLTA – Return to Green Left Turn Arrow. When the odd phase is omitted, allow one service of the odd phase green if the odd phase maxes out OR vehicle demand is present during the yellow change interval(0 = off, 1 = max out, 2 = yellow lock).

From the CONTROLLER PROGRAM MODE MENU

Select 7. **OPTIONS MENU**

```
                --OPTIONS MENU--
1.LAST CAR PASS/        4.FIVE SECTION HEAD
  INH SIM GAPOUT        5.SERVICE/MAX PLANS
2.R.REV/AUTO PCL/       6.INHIBIT MIN YELLOW/
  FDW->YEL/SOFT           RED DEC. OFF/ CHANGE
  REC DELAY               SEQUENCE
3.DUAL ENT/             7. RED CLR EXTENSION
  COND SERV
```

From the **OPTIONS MENU**
Select 1. **LAST CAR PASS/INH SIM GAPOUT**

```
   AFTER TIME B4 REDUCT.  THE UNIT WILL 1<
    0.RECALL PHASE        2.NOT RECALL, NOT
    1.LAST CAR PASSAGE      LAST CAR PASSAGE

-INH. SIMULTANEOUS GAP OUT-     |USE KEYS 1-
PHASE 1  2  3  4  5  6  7  8 CURSOR |8 TO TOGGLE
             X          X           |ON & OFF
          --PGDN(A)/UP(B) FOR MORE--
```

To enable Last Car Passage, use the arrow keys to move the cursor to the appropriate location on the screen. Use the number keys for setting the value required. Use the **E** key or arrow keys for entering data. To cancel a database entry change before entering the new data, use the **C** key to restore the previous database value.

To enable inhibit simultaneous gap-out by phase, use the arrow keys to move the cursor to the appropriate row, press the phase number to toggle the phase function on or off, (X = on). Use the **E** key or arrow keys for entering data. To cancel a database entry change before entering the new data, use the **C** key to restore the previous database value.

During volume density/gap reduction, the following modes are possible:

RECALL PHASE (**0**) – This is normal operation, recall the phase if the phase is extending.

LAST CAR PASSAGE (**1**) – If gap-out occurs, the passage timer is loaded with (passage time – current gap) and during this period no passage reset is possible. If there is an actuation during this portion of passage, the phase is recalled.

NOT RECALL, NOT LAST CAR PASSAGE (**2**) – There is no last car passage or phase recall.

INHIBIT SIMULATANEOUS GAP-OUT – When the passage timer times out, the phase can not restart its passage timer. Therefore, if a conflicting call is registered at

this state, the controller will leave the phase immediately if the min green has timed-out. This function is enabled when one or more phases have an ‘X’ below the phase number & when TOD circuit 58 is on.

Page Down (**A**) to program **R. REV/AUTO PCL/FDW THRU YEL**

```
RED     |AUTO    |FDW THRU    | SOFT REC|
REVERT |PCL     | YELLOW     |  DELAY  |
  3.0<+2|   0    |    0       |    7.0  |
 SECS. |0=OFF   |0=OFF       |  SECS.  |
 0-25.5 |1=ON    |1=ON        |  0-25.5 |
```

RED REVERT – Extra all red clearance for green-yellow-red-green sequencing on the same phase. The minimum is 2 seconds, therefore, if a value of 1.0 second is entered, the red revert time used is 3.0 seconds.

AUTO PEDESTRIAN CLEARANCE – Prevents Interval Advance from ending pedestrian clearance with Manual Control Enable active.

FLASHING DON’T WALK THROUGH YELLOW – When this function is ON, the Don’t Walk output will flash through the yellow change interval. **WARNING: “Not Ped” Overlaps for Overlaps A-D must not be used with this feature.**

SOFT RECALL DELAY – The time between the termination of the last vehicle call and the placement of recall on the programmed soft recall phases. Field experience has shown that at some intersections were soft recall is useful, that it may still be recalling phases “too soon”. Driver frustration and signal inefficiency might be reduced by delaying the activation of soft recall.

Page Down (**A**) to program **DUAL ENTRY**

```
                --DUAL ENTRY--
PHASE        1   2   3   4   5   6   7   8
DUAL ENT PH 0<   0   8   8   0   0   4   4

    THE DUAL ENTRY MODE IS 1
 0.OFF       2.N/A              4.CALLED BY
 1.ON        3.CALL BY COORD    T/C CKT 61
          --PGDN(A)/UP(B) FOR MORE--
```

To enter the Dual Entry mode, use the arrow keys to move the cursor to the appropriate location on the screen. Use the number keys for setting the value required.

DUAL ENTRY – When activated, this function will cause the phase listed to call the Dual Entry Phase programmed, as long as no call is registered in that ring and on

that side of the barrier. Thus, 2 phases will always be served instead of one ring being in red rest. The phase programmed must be compatible with the phase listed.

Page Down (**A**) to program **CONDITIONAL SERVICE/RESERVICE**

```
     --CONDITIONAL SERVICE/RESERVICE--
PHASE  1    3    5    7    |0=BOTH OFF
MODE   1<   0    1    0    |1=CS ON
CSMAX   15   0   15   0    |2=CS/TOD CKT 57
                            3=NA
ALLOWED FOR SEQUENCES 4=BOTH ON, CS+CR
1(QLT) & 7(L/L).            5=CS+CR/CKT 57
          --PGDN(A)/UP(B) FOR MORE--
```

To program the mode for Conditional Service/Reservice, use the arrow keys to move the cursor to the appropriate location on the screen. Use the number keys for setting the value required.

CS – Conditional Service.

CR – Conditional Reservice.

CSMAX – The max time used for the conditionally serviced phase.

Conditional Service is only allowed with sequence (1) QUAD LEFT TURN or sequence (7) LEAD/LAG, and the controller must be in FREE OPERATION. In sequence (7) LEAD/LAG, both left turns must lead on the Conditional Service side of the barrier. Consider a phase pair of 1 & 2. Conditional Service allows second left turn service for phase 1 during the same cycle if time permits. To determine adequate time, the phase 2 clearance time plus the Conditional Service Max Time for phase 1 must be equal or less than the through phase opposite ring max timer. When phase 1 is in conditional service it uses the Conditional Service Max Time for phase 1. After phase 1 is serviced, the phase 2 will be skipped when servicing the conflicting call across the barrier unless Conditional Reservice is initiated. Similar operation is available for the other three phase pair; 3 & 4, 5 & 6 and 7 & 8. Note: There is an analogous operation during coordinated operation called Coord Late Left Turn.

Conditional Reservice - Consider a phase pair of 1 & 2. If Conditional Reservice is enabled (mode 4 or 5) and Conditional Service has caused the pair to go from phase 2 to back up to phase 1, then phase 2 (the through phase) can be Conditionally Reserviced. This will take place if the phase 1 clearance plus the phase 2 minimum green is equal or less than the opposite ring through phase max timer & there is a call on phase 2. Similar operation is available for the other three phase pair; 3 & 4, 5 & 6 and 7 & 8.

Page Down (**A**) to program **5-SECTION HEAD RESTRICTIONS**

```
 5 SECTION HEAD RESTRICTIONS (SEE HELP (F))
                    6 & 1   8 & 3   2 & 5   4 & 7
X OMITS Y             0<      0       0       0
ANTI-TRAP           (1)1    (3)0    (5)1    (7)0
     --5 SECTION HEAD YELLOW BLANKING--
PH  1    3    5    7    | 1= BLANK YELLOW
    1    0    1    0    | IF CLEARS WITH THRU
          --PGDN(A)/UP(B) FOR MORE--
```

(X Omits Y) & Anti-Trap will only work with sequence (1), QUAD LEFT TURN and sequence (7) LEAD/LAG:

X OMITS Y – X = Through phase and Y = Left turn phase. This function is used to prevent left turn service directly from the adjacent through phase. If programmed with a value of “1” and a serviceable call is on the left turn (the Y phase), and the associated through phase (the X phase) is green, then the left turn phase will be omitted and a call will be placed across the barrier. If X OMITS Y is programmed with a value of “2”, the Y phase is simply omitted when the X phase is green.

ANTI-TRAP – Clears the adjacent through phase to the left turn about to be serviced AND the opposing through phase to prevent the opposing left turn phase from getting trapped. For example 12/56 + 34/78 sequence, ANTI-TRAP: (5) = 1 (on) and phases 2 and 6 are resting in green. Phase 2 is clearing to service 1. Phase 6 will also clear followed by Red Revert back to 6 green.

Yellow Blanking will only work with sequences (1), QUAD LEFT TURN & (7) LEAD/LAG:

YELLOW BLANKING – Allows the left turn yellow to be extinguished if both the left turn phase and adjacent through phase clear together while crossing the barrier. This prevents unwanted signal displays.

From the **OPTIONS MENU**
Select 5. **SERVICE/MAX PLANS MENU**

```
--SERVICE/MAX PLANS MENU--

 1.SERVICE PLANS

 2.MAX PLANS
```

Select 1. **SERVICE PLANS**

```
SP1<   PHS   1    2    3    4    5    6    7    8
   CALL      0    6    3    4    0    6    0    0
    MGR      3   12    3    8    3   12    3    8
    PSG    1.0  2.0   .5  1.0  1.0  2.0   .5  1.0
    YEL    4.0  4.0  4.0  4.0  4.0  4.0  4.0  4.0
    RED    1.0  1.0  1.0  1.0  1.0  1.0  1.0  1.0
    WLK      0    4    0    7    0    7    0    7
    PCL      0   12    0   19    0   14    0   22
```

Service Plans allow the user to change basic timing values and enable certain phase service functions. Service Plans can be activated by enabling TOD circuits or by association with a coordination plan (see coordination programming). If more than one Service Plan is enabled, the highest numbered plan will override the others in operation.

Phase Times - When activated, Service Plan programming will override the normal phase times.

Phase Recalls – There are four recalls associated with Service Plans: Min, Max, Soft & Ped. When activated, Service Plan programming will **not** override the normal phase recalls found in the Phase Function area or the TOD recalls. The matrix below shows the relationship between the recalls from these three sources.

Effective Recalls for A phase		Phase Function Recalls & TOD Max or Ped Recalls			
		Min	Max	Ped	Soft
Service Plan Recalls	Min	Min	Max	Ped	Min
	Max	Max	Max	Max & Ped	Max
	Ped	Ped	Max & Ped	Ped	Ped
	Soft	Min	Max	Ped	Soft

Phase Omits – There are two omits (Phase & Ped) associated with Service Plans. When a Service Plan is active these Omits will be active.

Phase Red Rest –Red Rest by phase can be associated with Service Plans. When activated, Service Plan programming will cause the phase to rest in Red if there is no other call in the ring and if there is no call across the barrier in the other ring.

To program Service Plans, use the arrow keys to move the cursor to the appropriate location on the screen. Use the number keys to set the value required. Use the **E** key

or arrow keys to enter data. To cancel a database entry change before entering the new data, use the **C** key to restore the previous database value.

CALL – Setting the calling mode for each phase. The following are definitions of call values. 0 = actuated (default), 1 = omit phase, 3 = min recall, 4 = max recall, 5 = soft recall, 6 = pedestrian recall, 7 = omit pedestrian service, 8 = red rest for phase.

MGR/PSG/YEL/RED/WLK/PCL – Minimum Green/Passage/Yellow/Red/Walk/Ped Clearance – These phase intervals give the controller an alternate source of timing for different traffic conditions if needed. When the service plan is in effect, the normal settings are overridden.

Page Down (**A**) past the eight Service Plan screens to program **MAX TIME MODE**

```
          --MAX TIME MODE--
                                        |0=MAX 1/2
PHASE     1   2   3   4   5   6   7   8|1=SELECT
MODE      1<  0   0   0   0   0   0   0|  MAX BY
                                        |TOD/COORD


          --PGDN(A)/UP(B) FOR MORE-
```

To use the Max Plan in effect for a specific phase, the entry must be “1”, use Max Plan by TOD or coordination plan. This entry is applied to all Max Plans. The Max Plan is selected by the TOD or coordination plan. This does not have to be programmed to use failed max time.

Page Down (**A**) to program **MAX PLAN TIMES**

```
            --MAX 1 PLAN TIMES--
PHASE      1    2    3    4    5    6    7    8
NORM MX    30<  60   40   30   30   60   40   30
FAIL MX    11   25   10   14   11   25   10   16
           --MAX 2 PLAN TIMES--
NORM MX    0    0    0    0    0    0    0    0
FAIL MX    0    0    0    0    0    0    0    0
         --PGDN(A)/UP(B) FOR MORE--
```

Max Plans allow the user to dynamically change Max Time values. Max Plans also allow special Fail Max times to be used in conjunction with Detector Fail Monitoring. Max Plans can be activated by enabling TOD circuits or by association with a coordination plan (see coordination programming) or Preempt Exit (see preempt programming). When activated, Max Plan programming will override the normal max times. If more than one Max Plan is enabled, the highest numbered plan will override the others in operation.

NORMAL MAX – Used if the Max Plan mode is enabled for the phase.

FAILED MAX –Used if a detector failure occurs while a detector is monitoring with a failed recall phase programmed. Max Time Mode for a phase does not need to be

set to “1” in order for the Failed Max time to be used. A Max Plan needs to be in effect by the TOD or coordination plan.

Page Down (**A**) to program **INHIBIT MIN YELLOW/RED DEC. OFF**

```
--INH MIN YEL/RED DEC. OFF---      X = ACTIVE
PHASE            1 2 3 4 5 6 7 8  CURSOR
INHIBIT MIN YEL          X              <
OFF= MIN. Yel 3 Secs./ ON= NO MIN. Yellow
RED DEC. OFF             X
OFF= RedClr in Tenths./ ON= RedClr in Secs.
             CHANGE SEQUENCE:  1
       (0=DISABLE, 1=ENABLE, SEE HELP)
```

To enable Inhibit Minimum Yellow, place an **X** under the selected phases. **Warning: The MUTCD requires at least three seconds of minimum yellow time. Engineering judgment and analysis must be applied when setting yellow change and red clearance times.**

RED DEC. OFF – Red Decimal Off – At times the red clearance interval must exceed 25.5 seconds, for example on a construction site in which two-way traffic must share a single lane by alternating back and forth. This function can change the red clearance of the phase to 0-255 seconds. If the phase detector is active during its red clearance with no opposing calls, the red clearance timer is zeroed and the red revert timer is used to prevent the phase from having a short red indication.

CHANGE SEQUENCE – Under certain conditions it may be desirable to change the controller’s sequence and/or overlap programming, without restarting the controller. Enabling this feature, via keystroke or download (from NWSCentral), will cause the controller to move to red rest and implement the sequence and overlap changes. From red rest the controller will go to green in the first phase pair, or individual phase, in the sequence. In addition, one time recalls will be placed on all vehicle and pedestrian phases. To enable this feature from the keyboard to the following two actions:

1. Place a ‘1’ in the address, even if there is already a ‘1’ there.
2. Enter the value by either pushing the enter key or using an arrow key to move the cursor out of the address.

It is recommended that the Auto Sequence Change address be set to ‘0’ once the change is completed, if the operator is at the controller. If the operator is using NWSCentral then the Auto Sequence Change checkbox should be un-checked once the change is completed. <u>It is not necessary to use this feature in cases where it is convenient to restart the controller after making a sequence change.</u>

Page Down (**A**) to program **RED CLR EXTENSION**

```
--RED CLR EXTENSION–

  PHASE    1   2   3   4   5   6   7   8
RED DET    0<  2   0   9   0   14  0   19
 RED TIM   .0  .0  .0  .0  .0  .0  .0  .0


--PGDN(A)/UP(B) FOR MORE-
```

The length of the red clearance interval can be dynamically lengthened based on the presence of a late arriving call. If a late call terminates in the last 50% of the yellow change interval or during the red clearance interval a red clearance extension timer is intiated. The timer is loaded with the programmed Red Time value. As long as the timer is decrementing, the red clearance will continue to be displayed to the street. Red Clear Extension can be disabled by TOD circuit 185.

RED DET – Assigns a local detector (1-32) to a phase to indicate the presence of a late arriving call. The detector would likely be located at or beyond the stop bar.

RED TIMe – The programmed value for the red extension timer (0-25.5 seconds).

Coordination

Coordination can be defined as the synchronizing of signalized intersections to establish progression. The need for coordinated progression is typically determined by performing an engineering study. If a study indicates coordination is warranted, a coordination plan can be prepared to best address the specific needs of the unique signal system. There are three basic requirements for traffic signal coordination:

1. All signalized intersections in a group must have the same **cycle length** or multiples of the same cycle length. For example, it is possible to coordinate a group of intersections to all use 100 second cycle lengths. It is also possible to coordinate a group made up of intersections using a mix of 50 second and 100 second cycle lengths.

2. Each local intersection must have a synchronization reference point, **local zero reference,** a point within the cycle known as "time zero". The local zero reference is needed to relate the timing of the local intersection to the timing of other intersections in the coordinated system.

3. A master reference must be selected for the group. Typically, one intersection within the group is chosen as the master location and set with an offset of zero seconds. The vehicle travel time from the master reference location to a local intersection is called the **offset** and is determined separately for each intersection. This is restated in equation form as:

   Offset = Travel Time from Master Reference Location to the Local Intersection

Figures 13, 14 and 15 demonstrate the relationship of these basic coordination requirements.

Figure 13:

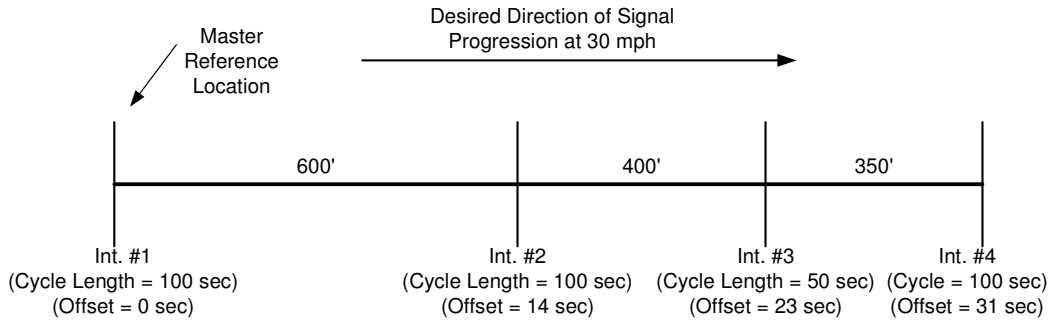

In Figure 13, the intersections all have the same cycle lengths or multiples of the same number, therefore they can be coordinated together. Intersection #1 is the master reference location, therefore it has an offset of 0 seconds. Intersection #2 is 600' downstream and needs an offset of 14 seconds since it takes that long to travel between the two intersections at 30 mph (44 feet per second). To travel from

Intersection #1 to Intersection #3 takes 23 seconds, equal to the offset for that intersection.

Figure 14:

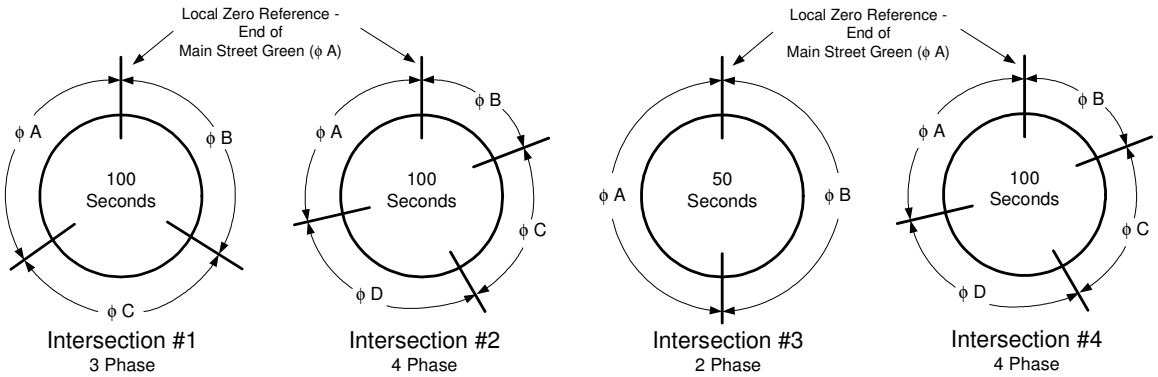

Figure 14 consists of a series of simplified local cycle diagrams, one for each intersection. These diagrams show that the local zero reference for each intersection is at the END of the main street phase (ϕ A). These diagrams have not yet been offset to the master reference, therefore all show the local zero reference in the "12 o'clock" position. When the offsets are applied to the diagrams they become rotated to resemble those in Figure 15

Figure 15:

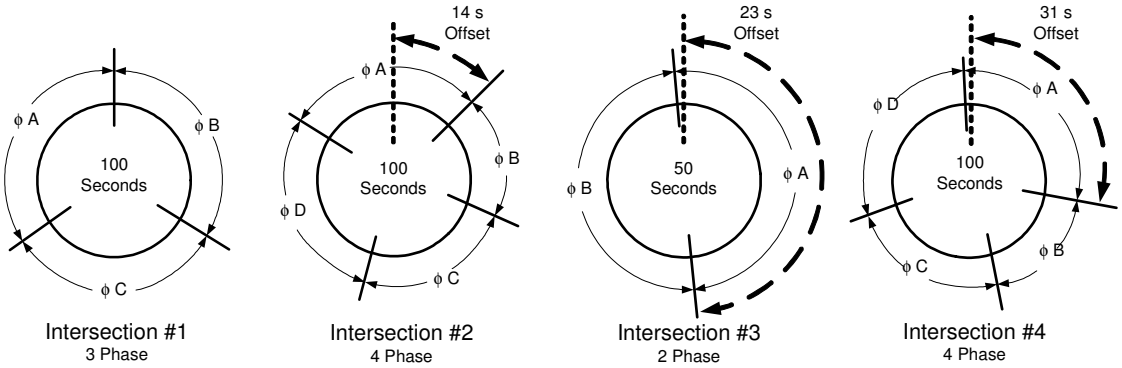

These offsets will progress a group of vehicles through these four intersections from left to right at 30 mph. If progression is necessary in the other direction at a different time of the day or if progression is desired in both directions simultaneously, then a change in offset values is required. The ability to vary offset times and other coordination parameters will be explained in later chapters.

There are differences in the coordination needs of pre-timed controllers and actuated controllers. In a pre-timed controller, the cycle length is fixed and does not vary from cycle to cycle. Therefore, if any point within the cycle is synchronized, the entire cycle

is synchronized as well. Therefore, to synchronize a pre-timed controller it is only necessary to address the three basic requirements, cycle length, local zero reference and master reference (offset).

In a coordinated, actuated controller, establishing a cycle length is a considerable process. This is because the cycle length of an actuated controller will normally vary from cycle to cycle depending on vehicle demand. A cycle length must then be “artificially imposed” on an actuated controller to obtain coordinated operation. To accomplish this, certain functions are used in the Voyage software such as permissive periods, holds and force-offs. These functions force the controller to operate within the constraints of a “local cycle” while still allowing the controller to operate in an actuated mode.

Voyage Coordination

Coord Mode Selection

The source of the coordination plan and flash command is selectable via programming entry. The available sources are Manual, Time Clock, Hardwire and Communications. Manual allows the programmer to override the current selections by turning on or off the flash command or changing the current coord plan. Time Clock enables the selections to be made by time clock programming. Hardwire allows external, ground-true inputs, 120 VAC to cabinet, to activate the selections. This requires AC-isolators. Communications allow the selections to be made through modem communications, (a master controller calling for activation of a particular coord plan).

Local Zero Reference

It is important to know where the local zero reference occurs in the local cycle in order to determine the appropriate offset times. In the Voyage software, the local zero reference occurs at the end of the green interval of the coordinated phases when the force-offs are set at zero, (Normal Coordination).

If Normal Coordination is used with coord phases programmed as phases 2 and 6 in a standard quad left sequence and Coord Walk Rest is turned off, the local zero reference would be located as shown in Figure 16.

Figure 16:

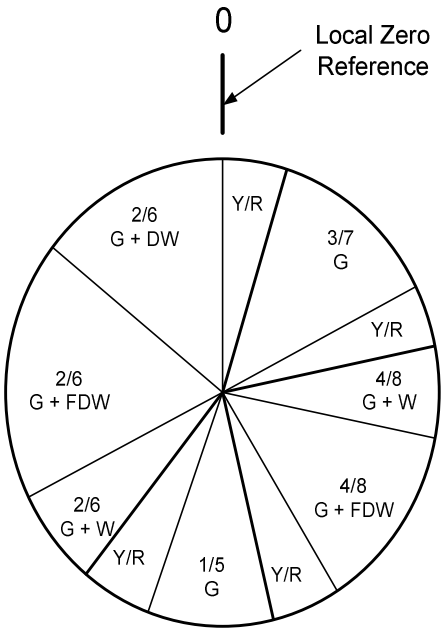

Use the example from above but turn ON Coord Walk Rest. The example will be the same except the end of the coord phase 2/6 flashing Don't Walk interval will coincide with the local zero reference, as shown in Figure 17.

Figure 17:

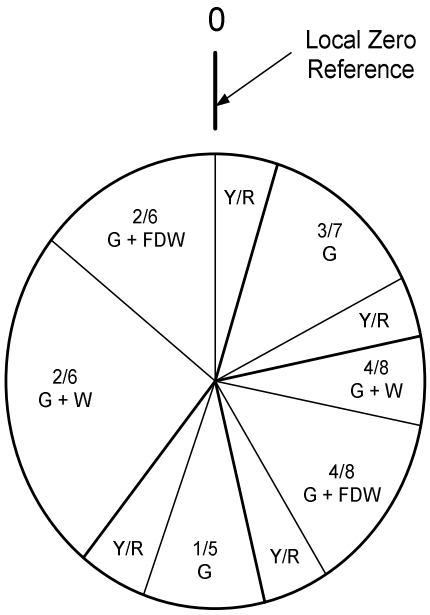

Consider an example in which the force-off points for the coordinated phases 2/6 occur after local zero. This requires detection on the main street which can extend the coord phase green from local zero towards the programmed force-offs. In this case, if the Coord Walk Rest function is OFF, the local zero reference will be as shown in Figure 18.

Figure 18:

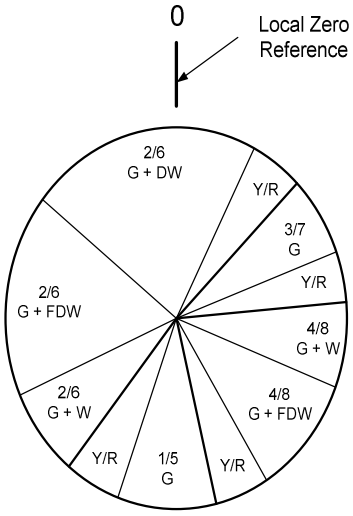

Use the example from above except turn ON Coord Walk Rest. The coord phases will terminate their flashing Don't Walk intervals at the local zero reference even though the phases do not force-off until later in the cycle, as shown in Figure 19.

Figure 19:

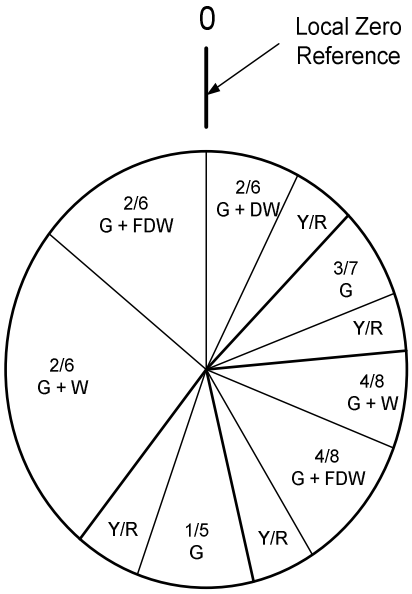

Coordinated Phases

One or two phases (one for a single ring sequence, two for a dual ring sequence) should be designated as the coordinated phases for each coord plan. There are 32 possible coord plans in the Voyage software and each plan allows the coord phases to be programmed separately.

The coord phase in effect during coordinated operation is treated distinctly:

1. Hold will be applied to the coord phases when no permissive period is active.
2. The coord phase does not require a permissive period. The permissive operation for all other phases is conditioned by the coord phase.
3. Recall is automatically placed on the coord phases.

Yield Points

For each ring there is a Yield Point. A Yield Point has three actions:

1. At the Yield Point the phase omits for non-coord phases of that ring are lifted.
2. If the Yield Point for a ring is greater than ‘0’, then Hold will be applied to the coord phase of the ring from local cycle ‘0’ to the Yield Point.
3. Ped Omit for the coord phase of a ring will be applied at the Yield Point for a ring, minus the (Walk + FDW) for the coord phase.

Although these two Yield Points are settable values, in most cases they are left at 0, which is the Local Zero Reference. Coordination Example #4, later in this section, describes cases where one or both of these Yield Points are non-zero values.

Permissives (Vehicle)

Permissive periods restrict service to non-coordinated phases at certain portions of the local cycle length in order to assure they are serviced at the proper time to meet force-off obligations. The beginning of all permissive periods is called the yield point. The yield point determines at what point the coord phases will yield to other phases. During each permissive period, the coord phases can go yellow in response to vehicle and/or pedestrian calls. When the permissive is active, the associated phases are permitted.

When the permissive is not active, and the coordinated phase is green, phases associated with the permissive output will be omitted and not eligible for service. **NOTE**: Permissives only have an effect when the controller is in the coordinated phase. When a non-coordinated phase becomes green, all phases in that ring are allowed because all vehicle omits are removed.

If the controller is in the coord phase, prior to the activation of any of the permissives, Omit is applied to all non-coordinated phases. When the permissives begin, vehicle omits are released on the corresponding phases which allows them service. When the permissives end, if the controller is still in the coordinated phase green (if there is no demand), vehicle omits will be re-applied.

The Voyage software has default values for the yield points (start of permissives) at the local zero reference. In other words, all non-coordinated phases are permitted to be served after local zero. In certain instances the user may choose to set these yield points at a non-zero value, consequently the permissives would not open until the yield point value is achieved. The end of the permissive period is determined by user programming on a per coord plan basis. When using Normal Permissive programming, a permissive value of one or greater is used (up to 255 seconds). The permissives for all non-coordinated phases will end with the permissive value (in seconds) past local zero, as shown in Figure 20.

Figure 20:

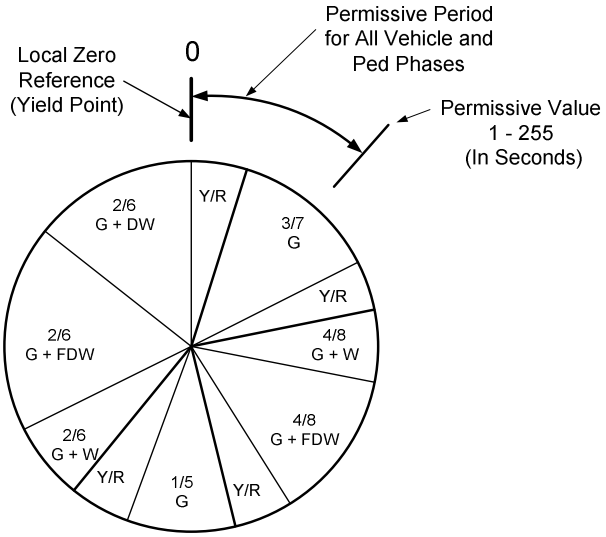

Alternative Permissive programming is used when the permissive value is set at **zero**. Alternative permissives automatically end on a staggered basis with each phase having a permissive which ends with just enough time remaining for a minimum phase service. This approach is more responsive to side street demand and appropriate during lower volume, coordinated, times of the day. The end of the phase permissive is calculated by subtracting the longest coordinated phase clearance (the longest sum of Yellow + Red Clearance from either coord phase) and the minimum phase service time from the phase force-offs. For this calculation the minimum phase service time will be the larger of six seconds or the Minimum Green. Alternative Permissives will typically appear as in Figure 21.

Figure 21:

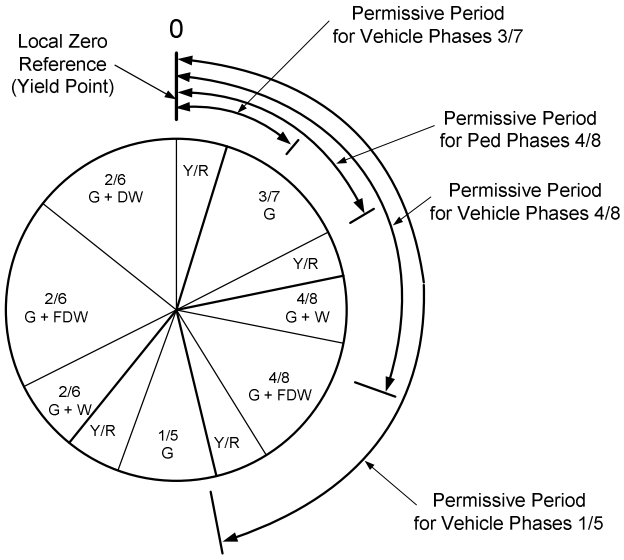

Pedestrian Permissives

Normal Permissives for pedestrian phases are handled similarly to vehicle permissives. The yield point (start of pedestrian permissives) occurs at the local zero reference. The end of the pedestrian permissive periods coincides with the end of the vehicle permissives if a value of one or greater is used (up to 255 seconds).

If an **Alternative Permissive** value of zero is used, pedestrian permissives are calculated on a per phase basis, with each phase having a pedestrian permissive which ends with enough time remaining for a pedestrian phase service. The end of the pedestrian permissive is calculated by subtracting the longest coordinated phase clearance (the longest sum of Yellow + Red Clearance from either coord phase) plus the pedestrian service time (Walk + Don't Walk) from the force-off of the phase. At the end of the pedestrian permissive a ped omit is applied.

Force-Offs

Force-off values are assigned on a per phase basis and can be programmed differently for each coord plan. The force-off function causes the controller to terminate the associated phase's right of way, but will not override pedestrian timing. When the pedestrian timing will extend the phase beyond its force-off the user should consider using the Ped Override time clock circuit as described in the Ped Override Mode subsection of this section on Coordination. The Voyage coordinator will maintain the force-off function until the green of the associated phase terminates. Coordinated and non-coordinated phases may have assigned force-off points.

Each force-off time is programmed as a fixed point in the cycle length. At the assigned point within the cycle, the force-off will be activated if the associated phase is determined active by the corresponding phase green.

Although force-off points are set and the coordinator is running, it is possible for phases to terminate early (prior to the force-off point) by gap-out or max-out, unless action is taken by the programmer. Normally, gapping out of non-coordinated phases is acceptable and requires no action. Max-outs however, are often undesirable during coordination, because the user may intend for the phases to service demand completely to the force-off point. To prevent phases from maxing out at any time, activate the Max Inhibit Ring 1 and Max Inhibit Ring 2 time clock circuits. Alternatively, some users prefer to set max times longer than coord phase splits. This will prevent max-outs, except when a phase starts early, then the max-out is helpful because it limits the duration of phase service.

When setting up coordinated timing the user should take into account the features of Voyage that can expand the time needed to serve and clear a phase. Examples include extra Green, Yellow, and/or Red associated with clearing an overlap, not ped overlaps, double clearing overlaps. Consider an 8 phase coordinated intersection with a quad left sequence. Further assume that phases 2 and 6 are the coord

phases. When considering Ring 1 there are three minor phases and a coord phases, listed below:

Phase	Phase Description
3	1st minor phase
4	2nd minor phase
1	3rd minor phase
2	coordinated phase

The 1st minor phase will start at a fixed point in the cycle. However if the 1st, 2nd, and/or 3rd minor phase overrun their force-off then the 2nd and/or 3rd minor phase or the coordinated phase will start late. In the case of the 2nd or 3rd minor phase this could reduce the time between phase start and its force-off, to the point that the phase would only run its min green. Voyage will not skipped phases when it runs past the normal phase start. In the case of the coord phase starting late, in a tightly compressed coordination plan, the coord phase may not be able to serve its min green or ped time to be ready to serve the coord phase Yellow at the local cycle zero point. This will cause the controller to go out of sync and then attempt to recover. Refer to the ped override section to see how overrunning the force-off due to minor phase ped service can be accommodated.

Hold

The Hold function is applied to coordinated phases at the end of all minor phase permissive periods. However, when one minor phase in a ring goes to Green, Hold will be applied to the coordinated phase in that ring. Therefore, the Hold could be applied before the permissives end. When using a normal permissive (permissive with a non-zero value) the Hold will be applied at the permissive time programmed. When using an alternate permissive (permissive with a zero value) the Hold will be applied when the last minor vehicle omit is turned on.

Omits, Vehicle and Pedestrian

A Vehicle (phase) Omit is placed on a non-coordinated phase by the coordinator whenever the coord phase is being served and the permissive for the phase is closed. The omit will prevent the associated phase from being served. The vehicle omitted will not present a conflicting call to any other phase, but will accept and store calls. If an omit becomes active during the timing of an associated phase, it will not terminate or otherwise effect the timing of the phase.

A Pedestrian Omit is placed on a non-coordinated pedestrian phase by the coordinator whenever the coord phase is being served and the pedestrian permissive for the phase is closed. The ped omit will prevent the associated ped phase from servicing a call, but will allow it to accept and store the call. If the ped omit becomes active during the Walk or Don’t Walk intervals of the phase, the intervals will time normally.

Repeated Phase Service

Repeated Phase Service is an important feature in the Voyage software. Its purpose is to provide better, more responsive service to non-coordinated phases during coordination.

With traditional coordination (without Repeated Phase Service), the coordinated phases are given complete priority. When the coord phases turn green, even if they turn green very early, they will remain green until the yield point is achieved. All non-coordinated phases are allowed one service per cycle. Repeated Phase Service re-allocates the priority somewhat. It allows the coordinated phases to terminate more than once per cycle and it allows non-coordinated to be serviced more the once per cycle. This “double servicing” is only allowed to occur when permissives are open for non-coordinated phases, thus preserving the coordinated “green band”.

Repeated Phase Service is most effective when the intersection is not operating near capacity. If all phases are forcing off, there is no advantage gained with Repeated Phase Service. However, when traffic volumes are moderate, and some phases are gapping out or being skipped altogether, then Repeated Phase Service can find opportunities to “double serve” phases. The MOE log built into Voyage is a great tool for monitoring historical phase service and comparing service with and/or without Repeated Phase Service. During periods of time when the feature is not beneficial it can be disabled by TOD using clock circuit 143.

There are three options for handling the coordinated phase ped movements when Repeated Phase Service is in use. **First**, ped service can restricted to the “normal” portion of the cycle for serving the ped movement, i.e., when all of the permissives are closed. The benefit of this is that more opportunity is given to serving non-coord phases during the portion of the cycle when permissives are open. A potential issue is that peds will sometimes not receive a walk indication at the start of green and they may perceive that they’ve been skipped. **Second**, active coord phase ped calls can be served anytime the coord phase turns green, but late ped calls would not be served if a permissive was open. This would meet the expectations of peds, but would reduce the controller’s ability to provide additional service to non-coord phases. The **third** type of operation is simlar to the second, but late arriving ped calls would be allowed to be served while permissives are open, unless a conflicting call was present.

Offset Seeking

The Voyage software supports three types of offset seeking, the traditional Dwell method, the innovative Fast Way method and a derivative of the Fast Way method called Add Only. Northwest Signal Supply recommends the Fast Way method.

When **Dwell** is used, the controller will dwell for up to the maximum dwell time. The Dwell method has been substantially improved compared to the current method used in the industry. This improvement relates to changing from one coordination plan to another. If a new coord plan is called for before the dwell point of the current cycle, the local cycle counter will be loaded with the cycle length of the new plan and immediately begin dwelling in an effort to synchronize the new coordination plan. Currently, other controllers on the market will not dwell here, but will wait until the controller has timed a complete cycle of the new coordination plan. Then it will dwell, thus delaying synchronization by a full cycle.

The dwell occurs either at local zero or prior to the don't walk interval of the coord phase, depending upon whether or not Coord Walk Rest is enabled:

> Coord Walk Rest D*isabled*:
> The dwelling of the cycle for offset seeking will take place at the end of the cycle (local zero) in the coord phase green/don't walk state.
>
> Coord Walk Rest *Enabled*:
> The dwelling of the cycle for offset seeking will take place at the end of the cycle minus the ped clearance time so the coord phases will dwell in the green/walk state. If the coord phases have unequal ped clearance times, the larger of the two will be used.

In **Fast Way**, the Voyage software continuously monitors the status of synchronization. If the local cycle is determined to be out of sync with the master cycle, the software will run through algorithms to determine the fastest way to regain sync and will immediately begin offset seeking. The software can either choose to shorten or lengthen individual seconds (effectively shortening or lengthening the overall cycle) to quickly regain sync.

When the software uses the short path, the seconds on the local cycle counter will be accelerated by 20%. This will cause a normal second to be timed as 0.8 seconds. When the controller is in sync it will revert to normal timing of the cycle counter. This accelerated timing will not cause yellow change, red clearance, or flashing Don't Walk intervals to be shortened. The short path reduces the green time for the coordinated phases and the minor phases by the same proportion.

When the software uses the long path (the add path), the seconds on the local cycle counter will be slowed by 40%. This will cause a normal second to be timed as 1.4 seconds. When the controller is in sync it will revert to normal timing of the cycle counter. This slowed timing will not cause yellow change, red clearance, or flashing

Don't Walk intervals to be lengthened. The long path increases the green time for the coordinated phases and the minor phases by the same proportion.

The minimum cycle length (Min Cyc) is a time long enough to provide minimum acceptable service to all phases. When Fast Way offset seeking is used, **in most cases use a min cycle value of 0**. If the desired min cycle is greater than 80% of the cycle length, then enter the calculated min cycle value. The limitation Min Cyc imposes on the speed of short path offset seeking is considered by the software before the decision is made to go short. In other words, the software will decide to take the long path if the long path results in faster sync.

The **Add Only** method is a variant of the Fast Way method. It only uses the long path and can't use the short path, thus its use is not recommended. In the add path, the seconds on the local cycle counter will be slowed by 40%. This will cause a normal second to be timed as 1.4 seconds. When the controller is in sync it will revert to normal timing of the cycle counter. This increases the green time for the coordinated phases and the minor phases by the same proportion when the duration of seeking is equal to the cycle length.

Ped Override Mode

Ped Override Mode is a clock circuit function related to coordinated operation which, when enabled, modifies the behavior of the controller when the ped split to be larger than the vehicle split that is called for in the coord plan. This function is beneficial because it allows infrequently serviced ped phases to be over-timed (run past the force-off point) without skipping or short-timing subsequent phases. This function causes the cycle time to freeze for the period of time which the phase remains in ped service beyond the force-off point. After over-timing, the cycle timer will be out of sync, but will re-sync via normal offset seeking.

The user is **strongly** advised to use Fast Way offset seeking when ped override mode is enabled. When the actuated ped movement over runs the phase force-off, the local cycle timer will be out of sync by the amount overrun. This is normally a small percent of the cycle <15%. With Fast Way the controller can immediately seek to get in step by going short. If the Dwell mode is used, the controller will have to dwell for segments of the cycle which add up to 85% of the cycle.

Side Street Coordination

Another method of coordination is to provide normal coordination for the main street with phases 2 & 6 and to provide secondary coordination for the side street with a function called Coord Phase Hold. This is enabled by phase with individual TOD Circuits 145-152 called Coord Hold Phase 1-8. This is used for non-coord phases during coordination. When activated for a non-coord phase a Hold is placed on the phase during coordinated operation. This will not call the phase, however if the phase is called it will be held until its force-off. Thus the phase will not gap out. The phase could still max out. This function would typically be used to provide secondary

coordination to the side street phases 4 & 8. To enable this the Coord Phase Hold circuits for phase 4 & 8 would be turned on and these phases would be set to Min Recall.

Coord Late Left Turn

For some intersections that are coordinated during heavy directional flow, there is a desire to provide a 2nd window of service for the protected left turn that is facing the lighter flow. This is accommodated by using Coord Late Left Turn for this left turn phase. Coord Late Left Turn is available for Phases 1, 3, 5 & 7. Please note that if Coord Late Left Turn is used for phase 1 it should not be used for phase 5 at the same time. Similarly if phase 3 is being used then phase 7 should not be used at the same time. It only operates with sequence 1 Quad Left Turn or sequence 7 Lead/Lag during coordination. There are enabling circuits (169-172) that are assigned respectively to phases 1, 3, 5 & 7. When a circuit is enabled it allows for another potential period of service for a left turn that opposes a coordinated phase. Coord Late Left Turn will not operate if Coord Walk Rest is enabled. Coord Late Left Turn will only operate with coord plans that use a permissive setting of (0), known as alternate permissive. When a phase is used for Coord Late Left Turn it should always be programmed for Max-Out Recall Inhibit. The Conditional Service Max for a Coord Late Left Turn phase must be set with great care.

(Conditional Service Max – 6) >= Left Turn Min Green

Consider that circuit 169 for phase 1 is turned on and the relevant timing parameters are as follows.

Cycle Length	120
Force Off Phase 1	70
Conditional Service Max Phase 1	22
Phase 2 Clearance	5

The earliest that phase 2 could go Yellow can be varied by changing the length of the phase 1 conditional service Max.

Earliest Ph. 2 Yellow = Cycle Length – CS Max Ph. 1 – Ph. 2 Clearance

Earliest Ph. 2 Yellow = 120 – 22 - 5 = 93

Latest Ph. 2 Yellow = Earliest Ph. 2 Yellow + 6

Latest Ph. 2 Yellow = 93 + 6 = 99

From these calculations it can be seen that there is permissive period from 93 to 99 when phase 2 can go Yellow to allow phase 1 service if the following conditions are met.

1. There is a call on phase 1.
2. Phase 2 is gapped out.
3. Phase 1 Coord Late Left Turn TOD Circuit (169) is on.

Once in the phase 1 Green it **must** remain there until the end of the cycle, if the force offs for the coord phases are set at 0. The length of the late left turn service for phase 1 is controlled by the setting of the phase conditional service max.

When using Coord Late Left Turn the user must do a special calculation to ensure that it can operate. Above there is a description for determining the beginning and end of the permissive period for phase 1. This permissive period must begin later than the following point in the cycle.

Last Point to Begin Permissive = FO Ph. 1 + Ph. 1 Clearance + Ph. 2 Min Green

Coord Late Left Turn with Actuated Coordination – There is a special case where Coord Late Left Turn can be used in conjunction with Actuated Coordination. By definition the force off values for the coord phases are not 0, but small positive numbers. On the 120 second cycle length, described earlier, possible force-off values could be 6 for phase 2 and 10 for phase 6. Continuing with the previous example assume that phase 1 was served with Coord Late Left Turn. At the end of the cycle the controller will be in phases 1 and 6 Green. A number of possible scenarios can now occur.

Scenario 1 – There is a call on 3, 4, 7, or 8 and there is a call on phase 6. The phase 6 call is then dropped at 4 seconds, and then phase 6 gaps out at 5 seconds. Then phases 1 and 6 will immediately go Yellow to serve the call across the barrier.

Scenario 2 - There is a call on 3, 4, 7, or 8 and there is a call on phase 6. The phase 6 call continues to its force-off at 10. Then phases 1 and 6 will go Yellow to serve the call across the barrier.

Scenario 3 – There are no calls anywhere. At 10, the phase 6 force-off, phase 1 will clear and phase 2 will go to Green.

Dynamic Phase Length

Traffic engineers have sought methods to make the operation of an intersection more responsive to real-time demands. In response to this pressing need we offer Dynamic Phase Length. In coordinated operation this allows for the dynamic movement of a phase *force-off* back and forward based on constantly calculated vehicle demands. In Free operation this allows for the dynamic movement of a phase *maximum green* back and forward based on constantly calculated vehicle demands.

Single Ring Coordinated - The operation of a traffic signal resolves down to phase pairs. In a single ring controller the phase pair of concern is; the current phase and the **next phase in the sequence**. In the case of a four phase single ring controller one phase pair is 3 & 4. In this instance phase 3 is the current phase that is Green and phase 4 is the next phase in the sequence. In Dynamic Phase Length the force-off of phase 3 is moved forward or back based on the ratio of the queue that had

developed on phase 3 and the (actual + predicted additions to the) queue for phase 4. When phase 3 has a proportionately longer queue than phase 4, the phase 3 force-off is moved forward. Alternately when the phase 3 has a proportionately shorter queue than phase 4, the phase 3 force-off is moved back. This calculation is done every second. Dynamic Phase Length can be used with any controller sequence.

Barrier Crossing & Dual Ring Coordinated - Dynamic Phase Length can also look across a barrier. Consider an eight phase controller with leading left turns. When phase 4 is Green its queuing is compared with the next phases across the barrier, phases 1 & 5. This comparison is used to adjust the force-off of phase 4. A similar calculation is made for phase 8. Thus the phase 4 & 8 force-offs, which are probably equal, can be independently moved forward and back from their starting position.

Coord Phases - Dynamic Phase Length can also be used to adjust the force-off of a coord phase. **There is an important restriction, the coord phase force-off can't be moved back if it is 0.** Consider an eight phase controller with leading left turns. The coord phases are 2 and 6 and their force-offs are 5. When phase 2 is Green its queuing is compared with the next phases across the barrier, phases 3 & 7. This comparison is used to adjust the force-off of phase 2. A similar calculation is made for phase 6. Thus the force-offs for the coord phases 2 & 6, which begin at 5, can be independently moved forward from 5 or back towards 0, but never less than zero.

Detector Setup – For this discussion refer to Figure 11 on page 114. Each phase used in Dynamic Phase Length needs to have a Back Detector. For through approaches this detector should be the farthest back detector. It should be far enough back that for most cycles vehicles will not queue over it during Red. For turn slots the detector should be as far back as possible but still in the path that vehicles take when moving into the turn slot. During heavier traffic times queues on Red may extend past the Back Detector. This is accommodated by the use of an occupancy adjustment factor. For multi lane approaches a detector can span across two or more lanes and is accounted for with a by-phase user input called the Lane Factor. In figure 11 consider phases 3, 4 and 8. Their respective back detectors are VD4, VD15 and VD25. The inputs from these three would be used to adjust the phase 3 force-off. The user is **strongly encouraged** to enable detector fail monitoring for all back detectors. When a detector fails its phase won't be used in Dynamic Phase Length.

For movements that allow permitted turns (during red), like protected/permitted left turns, **check out detectors** can be assigned to optimize the algorithm. A check out detector must be placed beyond the stop bar and assigned to the proper phase.

QPLUSKO – In this discussion there are references to queues. Rather than just use queues the internal controller calculations use QPLUSKO. QPLUSKO is the queue plus an addition based on the percent occupancy of the back detector. For a multi lane approach QPLUKO is predicted for the lane that tends to have the highest volume.

Free Operation – Dynamic Phase Length can also be used during Free operation. When a phase is Green its Max value can be increased or decreased up to a per phase value of Free Delta Max. As in coordinated operation the comparison of QPLUSKO values for the current phase and the next phase are the basis of the adjustment. **However** the crucial difference is that during Free operation the comparison is made with the **next phase with demand**.

Dual Ring Free – Consider an eight phase controller with leading left turns with demand on some but not all phases. Assume that phase 3 is Green, and that there is demand on phase 8, 1 & 5. Now the phase 3 queue is compared with the phase 1 and phase 5 queues. This comparison is used to adjust the max time of phase 3.

Enabling – **Dynamic Phase Length is enabled when 1 of 4 TOD circuits are on.** Each of these circuits is associated with 1 of 4 sets of adjustment values. They are listed below. *If the intersection is coordinated when circuit 174 is on, then Dynamic Phase Length is enabled and the Coord Delta Force-off values of Set B are used.*

TOD Circuit #	Dynamic Phase Length Set
173	A
174	B
175	C
176	D

User Input Data – The user inputs a small amount of data for each phase that uses Dynamic Phase Length.

1. Back Detector number (1-32)
2. Lane Factor (1.0 – 5.0)
3. Coord Delta Force-off for 1 or all of 4 sets
4. Free Delta Max for 1 or all of 4 sets

Typical Dynamic Phase Length Input Data
Reference Figure 11

		Phase							
		1	2	3	4	5	6	7	8
Back Detector		VD2	VD10	VD4	VD15	VD6	VD20	DVD8	VD25
Lane Factor		1.0	1.8	1.0	1.6	1.0	1.8	1.0	1.7
Coord Delta Force-off	Set A	3	8	4	6	3	8	4	6
	Set B	4	10	3	8	5	10	3	8
	Set C	8	9	7	9	7	7	11	9
	Set D	6	12	5	9	4	12	4	6
Free Delta Max	Set A	5	9	5	10	6	11	4	9
	Set B	6	11	5	8	7	14	5	11
	Set C	7	12	4	11	3	12	6	7
	Set D	11	16	9	18	12	18	9	16

Lane Factor – The Lane Factor is the number of lane adjusted for the propensity of queuing in the predominate lane. The lane factor is calculated by the user with the following equation.

$$\text{Lane Factor} = \frac{100}{\text{\% Total vehicles in highest volume lane}}$$

	Lanes	% Total vehicles in highest volume lane	Lane Factor
Example 1	1	100	1.0
Example 2	3	33	3.0
Example 3	3	42	2.4

Coord Delta Force-Off – The Coord Delta Force-Off is the maximum amount that the force-off for a phase can be increased or decreased. There is a value for each of the eight phases. These values, by phase, are grouped together in 4 separate sets, A-D. Only one set is used at a time.

Free Delta Max – The Free Delta Max is the maximum amount that the maximum green for a phase can be increased or decreased. There is a value for each of the eight phases. These values, by phase, are grouped together in 4 separate sets, A-D. Only one set is used at a time, called by TOD or coord plan.

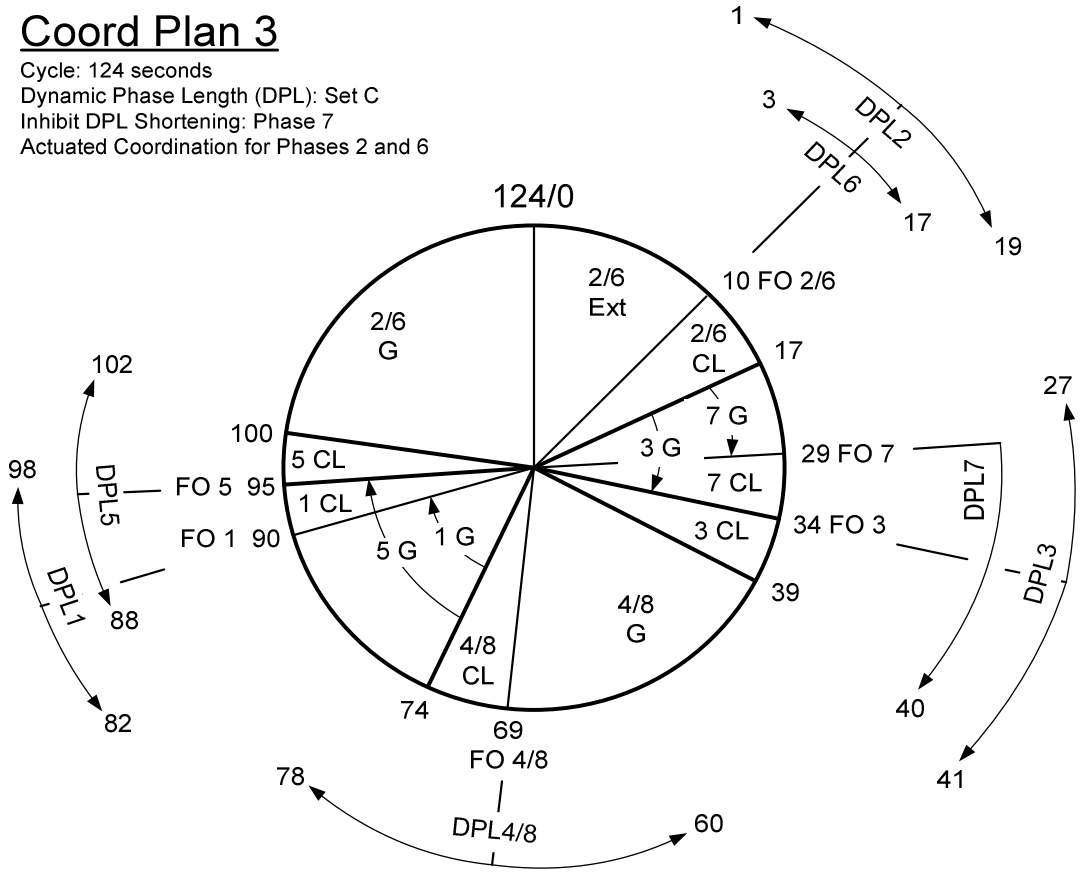

Platoon Progression

Traffic engineers have sought methods to make the cycle length, offset and splits of an arterial of intersections more responsive to real traffic demands. In response to this demand we offer Platoon Progression. In Platoon Progression platoons are rippled through the system with a unique cycle length for each platoon. Platoon Progression creates pure one-way progression in the preferred direction. Platoon Progression has application if **all** of the following conditions are true.

1. A linear system of intersections on a single route.
2. Highly directional heavy traffic during at least one period of the day. Highly directional means about 60% or more of the traffic going one direction during at least one time period.
3. A continuously operating communications link between one intersection that is the master and every other intersection in the system.

Theory of Operation – In the following discussion assume that the arterial street is directional in the AM and PM and that there are two through lanes in each direction. At each end of the arterial system there is an entry intersection. The heavy flow in the AM is Inbound and there is entry Inbound intersection at one end of the arterial. At the other end there is an Outbound entry intersection. Well in advance of the entry intersections, 400'+ from the stopbar, there are detectors in each of the lanes. When Platoon Progression Inbound is enabled, via a TOD circuit, and the entry intersection is in the Inbound Green the entry intersection begins looking for a platoon passing over its advance detectors. When both detectors gap out then it holds the Green long enough for the last car to cross the stopbar, and then goes to Yellow. This Yellow is then progressed through the system at the progression speed set by the user. The amount of time between a phase 2 & 6 Yellow at the entry intersection and the next phase 2 & 6 Yellow is the current cycle length.

When enabled, Platoon Progression overrides free operation and normal coordinated operation and it ignores all normal coordination programming. Platoon Progression operates as there was only a single coordinated phase in the direction of heaviest flow. The actual selection of the coordinated phase is dictated by the selection of Inbound (Must be Phase 2) or Outbound (Must be Phase 6). The duration of the coordinated phase will vary by the size of the platoon, within the limits specified by the user. The duration of non-coordinated phases will change proportionally with the size of the overall cycle length. Normal phase service rules apply; Non-coordinated phases are only served if they have demand. Max times can be set to limit the overall length of non-coordinated phases.

At the start of Platoon Progression the entry intersection must complete a full cycle before a platoon cycle length is set. The full cycle is from coord phase yellow to coord phase yellow. Once the entry intersection has selected a cycle it is communicated to all downstream intersections by the master. Platoon Progression supports lead/lag operation.

System Layout – For illustration a diagram of a 3 intersection system is shown in Fig. 22. For the sake of clarity a very small system is shown. In theory a system could have anywhere from 2 – 50 intersections. In practice it is anticipated that Platoon Progression would be used for systems of 5 – 20 intersections. At each end of the system there is an entry intersection. One end is the Inbound entry intersection and the other end is the Outbound entry intersection. For each entry intersection there are two advance detectors. These detectors are connected directly to the controller cabinet of the entry intersection. In a system there is one intersection that is the master intersection. Any intersection could be the master, it could be an intersection in the middle of the system or it could be one of the entry intersections. From the master to each local there needs to be a dedicated, always ON, communications path. This could be a twisted pair cable, a fiber optics cable, or other communications medium with a baud rate as low as 1200 baud.

System Failure Modes - When communications is lost to one or more intersections the entire system is set to non-recoverable TOD operation for the current session of Platoon Progression. After the current circuit, Inbound or Outbound goes off a new session is potentiated and waits for one of the circuits to be turn on. All four entry detectors and all four mid-system critical detectors must be set to detector fail monitoring. When both entry detectors are failed then the system will be set to TOD operation. When one of or both of the entry detectors have repaired then the system will re-enter Platoon Progression operation. Failure of the mid-system critical detectors in the preferred direction will cause the Offset Adjustment to be set to 1.0 and Platoon Progression will stay active. If a non-entry intersection goes into preemption it will not affect the operation of Platoon Progression for the system. If the active entry intersection goes into preemption the system will be set to TOD operation. After preemption recovery the system will re-enter Platoon Progression.

Data The Master Receives - The master intersection receives cycle information from the entry intersection that is active, either Inbound or Outbound. At two points in the system, one Inbound and one Outbound, there are two Mid-System Critical detectors. These detectors are located where there is queuing during heavy traffic conditions. These detectors are master system detectors and are thus polled by the master. The master uses the volume and occupancy of these four Mid-System Critical detectors to generate an Offset Adjustment.

Figure 22a. Example Platoon Detector Data

	Inbound			Outbound			
Master	Master #	Sys	Local	Master #	Sys	Local	
Detector	Local #	Det	Det	Local #	Det	Det	Detector Description
	19-1		11				Inbound Entry Detector
	19-1		12				Inbound Entry Detector
1	19-2	1	17				Inbound Mid-System Critical Detector
2	19-2	2	18				Inbound Mid-System Critical Detector
				19-3		11	Outbound Entry Detector
				19-3		12	Outbound Entry Detector
3				19-3	1	17	Outbound Mid-System Critical Detector
4				19-3	2	18	Outbound Mid-System Critical Detector

Data The Master Sends - The master broadcasts the next cycle length and the Offset Adjustment to every other local.

Affect of Preemption – If a non-entry intersection is preempted it will not effect the other intersections and after its preemption is ended it will move back into Platoon Progression. If the entry intersection is preempted the other intersections will clear out there stack of Platoon Progression cycles and then temporarily revert to TOD. When the entry intersection has ended its preemption it will go through the same cycle determination process that it does at the initiation of Platoon Progression. When the master has its first new cycle length it will send it to the master, with its phase 2/6 Yellow time, and Platoon Progression will resume in the system.

Figure 22b Platoon Progression Example

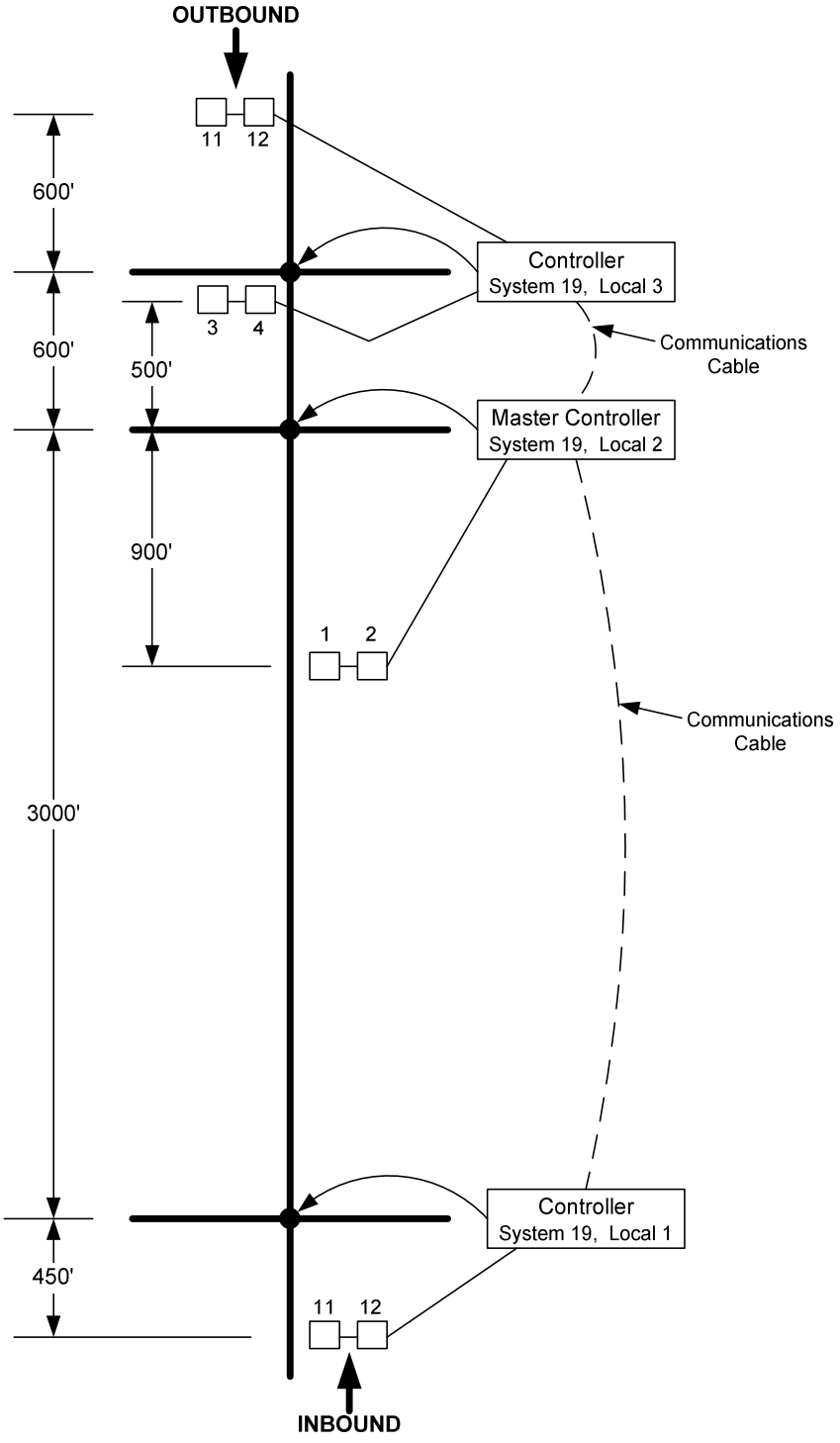

Splits by Force Off % – The force-offs for the non-coord phases of each intersection are calculated by multiplying the current cycle length, that is being processed by the intersection, times a percentage for that phase. Thus, if the phase 4 percentage is 35 and the current cycle length is 87 then the phase 4 force-off will go on at 30. If the next cycle length in the Inbound operation is 122 then the phase 4 force-off will go on at 43.

Each force off percent is referenced to the zero point of the cycle. The zero point is always the beginning of yellow of the coordinated phase.

Phases 2 and 6 are handled differently. Either Phase 2 (Inbound) or Phase 6 (Outbound) is the coordinated phase and does not require a force off percent. The other through phase (non-coordinated) will be forced off at the same time as the barrier phase in the opposite ring, or otherwise will gap out or max out. The Min Green and Max Green settings should be used to control the length of the non-coordinated main street phase.

There are two sets of force off percentages for Inbound and two sets for Outbound. The second set of splits Split 2 can be enabled with TOD circuit 159.

Offset – Platoon Progression uses pure directional Yellow progression by setting the offset based on the distance from the entry intersection and the progression speed of the system. For example if the progression speed is 40 MPH and an intersection is 6150' past the entry intersection the travel time to the intersection is 105 seconds. This intersection will then always go Yellow 105 seconds after the entry intersection goes Yellow.

Offset Adjustment – Often there is a critical intersection in the directional arterial that has significantly higher minor phase demands and thus a lower G/C ratio for the main street. In advance of this intersection, during heavy traffic flow, queuing will develop. This causes the platoon to arrive at the back of this queue and then be impeded as it waits for its theoretical progression band to go through the critical intersection. To accommodate this, master system detectors are placed well in advance of this critical intersection. A smoothed VPLUSKO calculation is done for these detectors. When the VPLUSKO rises above an internal threshold, a value called the Offset Adjustment progressively rises from 1.0 towards 1.5. Consider the Offset example above; if the current value of the Offset Adjustment is 1.08 then the travel time of 105 seconds would be reduced to 97. This would make the Yellow come on 8 seconds earlier and in turn make the Green also come on 8 seconds sooner. Just as the Offset Adjustment can rise from 1.0 when there is congestion, as the congestion is lessened the Offset Adjustment will fall back eventually to 1.0. The Offset Adjustment is broadcast by the master when it broadcasts the new cycle length. The Offset Adjustment is used by a local the next time it goes to phase 2 & 6 Yellow.

Typical Platoon Progression Input Data

Data for each Intersection

	Speed (mph)	Distance from Entry Local (feet)
Inbound	40	4500 (varies)
Outbound	40	3000 (varies)

		Force-off Percent by Phase					
		1	3	4	5	7	8
Inbound	Split 1	50	15	35	55	15	35
	Spit 2	46	14	33	53	14	32
Outbound	Split 1	56	15	35	50	15	35
	Spit 2	54	14	33	48	14	32

Data for Inbound Entry Intersection

Platoon Max (sec)	70	
Minimum Platoon Green (sec)	20	
Entry Detector Gap (sec)	2.7	
Distance from Entry Local Detector (feet)	450	
Intersection # of Inbound Entry Intersection	1	
Entry Local Detectors	11	12

Data for Outbound Entry Intersection

Platoon Max (sec)	65	
Minimum Platoon Green (sec)	20	
Entry Detector Gap (sec)	2.7	
Distance from Entry Local Detector (feet)	600	
Intersection # of Outbound Entry Intersection	3	
Entry Local Detectors	11	12

Data for Master Intersection Only

Smoothing Factor	0.4	
Intersection # of Inbound Entry Intersection	1	
Intersection # of Outbound Entry Intersection	3	
Inbound Mid-System Critical Detectors	1	2
Outbound Mid-System Critical Detectors	3	4

Coordination Programming Screens

To make changes to Coordination programming, bring up the MAIN MENU by pressing the **NEXT** key.

```
                --MAIN MENU--

        1.RUN MODE        3.UTILITIES

        2.PROGRAM MODE

        -- AUX Switch ON = Stop Time --
            --USE F KEY FOR HELP--
```

Select 2. **PROGRAM MODE**

```
            --PROGRAM MODE MENU--

1.SECURITY CODE  5.PREEMPTION     8.I/O
2.CONTROLLER     6.COMM/REPORT      CONFIG
3.COORDINATION   7. TRANSIT       9.INTERNAL
4.TIME CLOCK        PRIORITY        LOGIC
```

Select 3. **COORDINATION PROGRAMMING MENU**

```
     --COORDINATION PROGRAMMING MENU--

1.COORDINATION MODES
2.COORDINATION PLAN PARAMETERS
3.TOD CKT MAPPING
4.DYNAMIC PHASE LENGTH
5.PLATOON PROGRESSION
```

Select 1. to change the **COORDINATION MODES** settings

```
                --COORD MODES--
FLASH          33 |0/1=OFF/ON,    SEE HELP(F)
CRD PLAN       33 |0=OFF,1-32=MAN, SEE HELP(F)
OFST SEEK       2 |0=ADD, 1=DWELL, 2=FASTWAY
LATE PED        0 |0/1=OFF/ON NON-COORD PHS
CRD WK REST     1 |0-2=OFF/ON/BY TOD CKT 160
ZERO MODE       0 |0-2= SMS/EMS/TOD CKT 144
         --PGDN(A)/UP(B) FOR MORE--
```

The Coord Modes screen allows for selection of the command source to enter and exit flashing operation and coordination. It also allows three coordination functions Offset Seek, Late Ped and Coord Walk Rest, to be enabled/disabled on a global basis (when any coord plan is active).

FLASH – The flash function allows planned flashing operation to be activated in several ways. If **0** is entered, the controller will not enter into a programmed flash condition. If **1** is entered, the controller will immediately be manually placed in

flashing operation. **33** will allow a TOD circuit enabled flash, **34** will allow flash to be initiated through modem communications and **35** will allow flash to be initiated through hardwire communications. **Important: Soft Flash phase assignments must be made prior to initiating flashing operation.**

CRD PLAN – The Coord Plan function allows for coordinated operation to be activated in several ways. If **0** is entered, the controller will remain in free operation. If **1** through **32** is entered, the controller will be manually placed in coordination, running the coord plan which corresponds to the programmed value. **33** will allow a TOD circuit enabled coordination, **34** will allow coordination to be initiated through modem communications and **35** will allow coordination to be initiated through hardwire communications.

OFST SEEKING – The selected Offset Seeking mode will be used for all coord plans. The Fastway mode is set as the default mode of operation.

LATE PED – The Late Ped function is used to allow *non-coordinated* phases to serve a late pedestrian call after the start of green. In order to serve a late ped, there must be enough time left for the Walk and pedestrian clearance before the force-off point. If time allows, the Walk timer will immediately restart upon receipt of a ped call.

CRD WK RST – Coord Walk Rest, when enabled, allows the coordinated phases to rest in walk. The exact behavior differs depending on whether or not Repeated Phase Service is enabled. Coord Walk Rest can also be enabled and disabled via TOD circuit 160.

> If Repeated Phase Service is *Disabled*:
> The coord phases will rest in walk when there are no permissives for non-coord phases, but will leave walk and time ped clear at end of the cycle minus ped clear time to be in green/don't walk at the end of the cycle. The coord phases will remain in green/don't walk as long as the coord phases are green and the non-coord phase permissives are active. If the coord phase services a non-coord phase and returns, the coord phase will rest in walk even if non-coord phase conflicting calls exist with permissives active.
>
> If Repeated Phase Service is *Enabled*:
> The coord phases will rest in walk when there are no permissives for non-coord phases, but will leave walk and time ped clear at end of cycle minus ped clear time to be in green/don't walk at the end of the cycle. The coord phases will remain in green/don't walk as long as the coord phases are green and the non-coord phase permissives are active. If the coord phase services a non-coord phase and returns, the coord phase ped will not be serviced as long as permissives are active.

ZERO MODE – Determines whether the zero point of the cycle is at the Start of Main Street Green (SMS) or the End of Main Street Green (EMS). Note that the Zero Mode can be changed using TOD circuit 144.

Page down (**A**) to program the **REPEATED PHASE SERVICE** settings.

```
        --COORD DOUBLE CYCLE--  ENABLE:  1<
 0.DISABLED     2.CRD PED @BEG OF GRN ONLY
 1.NO CRD PED  3.CRD PED @ANYTIME

-OMIT PHASES DURING COORD DC-  |KEYS 1-8=
PHASE  1 2 3 4 5 6 7 8 CURSOR |ON/OFF, 0/9
       X X X   X X X          |=ALL OFF/ON
         --PGDN(A)/UP(B) FOR MORE--
```

See the earlier description of Repeated Phase Service. Essentially, it is a feature that provides more responsive service to non-coordinated phases by allowing the coordinated phases to terminate more than once per cycle. *Activating TOD circuit 143 will disable Repeated Phase Service.*

ENABLE – The Repeated Phase Service (CDC) function can be operated in several ways, relative to the ped movements on the coordinated phases. If **0** is entered, the controller will not CDC. If **1** is entered, the controller will CDC, but the coord phase ped movements will not be served if any permissives are open. If **2** is entered, the controller will CDC, and an active ped call will be served at the start of coord phase green. If no ped call exists at the beginning of green and then a ped call is entered, the ped call is not serviced if a perm is active, even if there is no conflicting call. If **3** is entered, the controller will CDC, and If no ped call exists at the beginning of green and then a ped call is entered, the ped will be serviced if no conflicting call exists.

OMIT PHASES DURING REPEATED PHASE SERVICE – Selected phases will not be able to be “double served”. In other words, selected phases will only be served a maximum of once per cycle. Position the cursor under the word “cursor” and press numbers 0-9 to toggle the desired phases (0=none, 1-8=phase, 9=all).

Page down (**A**) to program **COORD PLAN 1** (Coord Plans 2-32 follow on successive pages)

```
COORD PLN: 1      CYCLE:  90      OFFSET:  0
 SERV PLN:  0    MAX PLN:  0   MIN CYCLE:  0
R1 CRD PH:  2  R2 CRD PH:  6        PERM:  10
R1 ACT TM:  0  R2 ACT TM:  0      USE FO:  0
        --PHASE SPLIT TIMES (SECS)--
      1    2    3    4    5    6    7    8
     12   32   19   27   12   32   19   27
        --PGDN(A)/UP(B) FOR MORE--
```

This screen contains all the data entry fields needed to program Coord Plan 1.

COORD PLAN X – The coord plan currently being edited.

CYCLE – The cycle length of the coord plan in seconds (0 – 255).

OFFSET – The Offset assigned to the coord plan in seconds (0 – 255).

SERV PLN – A Service Plan can be initiated whenever the coord plan is in operation. If **0** is entered, the controller will use normal phase timing and phase recall programming. **1**–**8** is used to initiate the corresponding Service Plan. **NOTE**: If a Service Plan is used remember to place data in the Service Plan that is to be used. Active TOD circuits override this setting if by TOD or internal logic. The phase function recalls are still active when a Service Plan is active, see matrix earlier in manual.

MAX PLN – A Max Plan can be initiated whenever the coord plan is in operation. If **0** is entered, the controller will use normal max times. **1**–**8** is used to initiate the corresponding Max Plan. **NOTE**: If a Max Plan is used remember to place data in the Max Plan that is to be used. Active TOD circuits override this setting if by TOD or internal logic.

MIN CYCLE or DWELL – This is the minimum cycle length which can be tolerated if Fastway seeks short. If as little as 80% of cycle is tolerated, **use zero**. If Dwell is selected as the Offset Seeking mode, the term DWELL will be displayed instead of MIN CYCLE. If Dwell is selected as the Offset Seeking mode, program a Dwell time in seconds (0-255).

R1 CRD PH – A Ring 1 Coord Phase must be assigned.

R2 CRD PH – A Ring 2 Coord Phase must be assigned. If no phases in Ring 2, use zero.

R1 YLD PT or R1 ACT TM – A Ring 1 Yield Point may be assigned. Normally defaults to zero. If **USE FO=0**, then R1 ACT TM (Ring 1 Actuated Time) applies and the desired length of time for the actuated portion of the coord phase is entered (secs).

R2 YLD PT or R2 ACT TM – A Ring 2 Yield Point may be assigned. Normally defaults to zero. If **USE FO=0**, then R2 ACT TM (Ring 2 Actuated Time) applies and the desired length of time for the actuated portion of the coord phase is entered (secs).

PERM – Enter a Permissive value. A value of **1** – **255** will initiate Normal Permissive operation. A value of **0** will initiate Alternate Permissive operation.

USE FO – An value of 0= Use Split Time entry, allowing force-off points to be auto-calculated. 1= Enter force-off points directly.

FORCE-OFFS or SPLIT TIMES – User determined Force-Offs are entered on a per phase basis in seconds (0-255). If **USE FO=0**, then Split Times are entered and

force-off points are calculated automatically. To view the autocalculated force-off values, press the “F” key followed by “C” key.

Return to the **COORDINATION PROGRAMMING MENU** by pressing **ESC**
Select 3. to program **COORD PLAN TO TIME CLOCK CKT MAPPING**

```
 --COORD PLAN TO TIME CLOCK CKT MAPPING--
MAP CRD  CKT CKT CKT CKT CKT CKT CKT CKT
  1   2   LG1 LG7
  2   3   SP1
  3  34
  4  34
  5  34
PAGE 1 OF 4          --PGDN(A)/UP(B) FOR MORE--
```

This powerful programming screen allows time clock circuits to be directly associated with specific coord plans, all coord plans, or even free operation. Under CRD PLN, enter a value from **0** – **34** and cursor right to associate up to eight time clock circuits (CKT). A value of **0** for the Coord Plan will enable the circuits during Free operation. A value of **1** – **32** will turn on the circuits when the specified Coord Plan is active. A value of **33** will turn on the circuits when any Coord plan is active. A value of **34** is unused (default). See the help screen (F) for time clock circuit numbers. The following circuits are not available for circuit mapping: 1-5, 7, 16 & 63.

Return to the **COORDINATION PROGRAMMING MENU** by pressing **ESC**
Select 4. to program **DYNAMIC PHASE LENGTH**

```
--DYNAMIC PHASE LENGTH PROGRAMMING MENU--

1.BACK DETECTOR, LANE FACTOR

2.COORDINATION PLAN DELTA FO

3.FREE PLAN DELTA MAX
```

Select 1. to program **BACK DETECTOR & LANE FACTOR**

```
        --DYNAMIC PHASE LENGTH DATA--
       Use TOD Circuits 173-176 to Enable.

    PHASE   1    2    3    4    5    6    7    8
      DET   2   10    4   15    6   20    8   25
     LANE  1.0  1.8  1.0  1.6  1.0  1.8  1.0  1.7
   CO DET   0    0    0    0    0    0    0    0
          --PGDN(A)/UP(B) FOR MORE--
```

This screen allows for assigning a back detector to each phase where dynamic phase length will be used. It also allows for setting a lane factor to account for a detector that spans more than 1 lane.

DET (Back Detector) – Assigns a local detector (1-32) as the back detector for a phase.

LANE (Lane Factor) – Allows setting a lane factor for a phase that has a Back Detector assigned. The Lane Factor is the number of detected lanes for the phase adjusted for the propensity of queuing in the predominate lane.

CO DET (Check Out Detector) – Assigns a local detector (1-32) as the check out detector for a phase. This would account for vehicles that make a permitted turn when the phase is not green, say from a protected/permitted left turn lane. The detector should be located beyond the stop bar.

Page Down (**A**) to program **COORD DELTA FORCE-OFF TIMES**

```
 -DYN PH LEN---CRD DELTA FORCE-OFF TIMES-
          ---------- PHASES ----------
SET     1    2    3    4    5    6    7    8
 A      3    8    4    6    3    8    4    6
 B      4   10    3    8    5   10    3    8
 C      4   11    5    7    4    9    5    6
 D      6   12    5    9    4   12    4    6
        --PGDN(A)/UP(B) FOR MORE--
```

COORD DELTA FORCE-OFF TIMES – Allows assigning four sets of Coord Delta Force-off times. The Coord Delta Force-off is the maximum amount that the force-off for a phase can be increased or decreased. There is a value for each of the eight phases.

Page Down (**A**) to program **FREE DELTA MAXIMUM TIMES**

```
 --DYN PH LEN---FREE DELTA MAXIMUM TIMES--
          ---------- PHASES ----------
SET     1    2    3    4    5    6    7    8
 A      5    9    5   10    6   11    4    9
 B      6   11    5    8    7   14    5   11
 C      7   12    4   11    3   12    6    7
 D     11   16    9   18   12   18    9   16
        --PGDN(A)/UP(B) FOR MORE--
```

FREE DELTA MAXIMUM TIMES – Allows assigning four sets of Free Delta Maximum times. The Free Delta Max is the maximum amount that the maximum green for a phase can be increased or decreased. There is a value for each of the eight phases.

Return to the **COORDINATION PROGRAMMING MENU** by pressing **ESC**

Select 5. to program **PLATOON PROGRESSION**

There are four **Platoon Progression input screens**. Different addresses have data depending on whether the intersection is an entry intersection or a master. For the sake of clarity a very small system is shown below. In theory, a system could have anywhere from 2 – 50 intersections. In practice it is anticipated that Platoon Progression would be used for systems of 5 – 20 intersections.

In the following screens assume there is a 3 intersection system (System 19). The intersection numbers and the intersection functions are described in the table below.

System	Local	Function
19	1	Inbound entry intersection
19	2	Master intersection
19	3	Outbound entry intersection

1st Screen
Intersection 19-1
Inbound entry intersection

```
-PLATOON PROG ENTRY LOCAL AND/OR MASTER-
      1st 3 used by Entry Local, SF by Master
         PLATOON MAX:     70<  (0,30-120 SEC)
  MIN PLATOON GREEN:      20   (0, 20-60 SEC)
ENTRY DETECTOR GAP:      2.7   (0-4.0 SEC)
  SMOOTHING FACTOR:       .0   (0-.6)
   --TOD CKTS 157(IB)/158(OB) Enables PPROG--
```

Intersection 19-2
Master intersection

```
-PLATOON PROG ENTRY LOCAL AND/OR MASTER-
      1st 3 used by Entry Local, SF by Master
         PLATOON MAX:      0<   (0,30-120 SEC)
  MIN PLATOON GREEN:       0    (0, 20-60 SEC)
ENTRY DETECTOR GAP:      .0    (0-4.0 SEC)
  SMOOTHING FACTOR:       .4   (0-.6)
   --TOD CKTS 157(IB)/158(OB) Enables PPROG--
```

Intersection 19-3
Outbound entry intersection

```
-PLATOON PROG ENTRY LOCAL AND/OR MASTER-
      1st 3 used by Entry Local, SF by Master
         PLATOON MAX:     60<  (0,30-120 SEC)
  MIN PLATOON GREEN:      20   (0, 20-60 SEC)
ENTRY DETECTOR GAP:      2.4   (0-4.0 SEC)
  SMOOTHING FACTOR:       .0   (0-.6)
   --TOD CKTS 157(IB)/158(OB) Enables PPROG--
```

PLATOON MAX – The maximum time that preferred direction, phase (2 or 6), will be Green during platoon progression operation.

MIN PLATOON GREEN – The minimum Green for the preferred direction, phase (2 or 6). After this time the preferred direction can gap out.

ENTRY DETECTOR GAP – The gap time for both entry detectors.

SMOOTHING FACTOR – Used in calculating VPLUSKO for the Mid-System critical detectors. These calculations are used in determining the Offset Adjustment. The Smoothing Factor sets the percentage of from the previous cycle to be used in this calculation. By example a value of .4 = 40% would use 40% old data. A value of 0, **which is not recommended,** would use 0% of old data.

2nd Screen
Intersection 19-1
Inbound entry intersection

```
      --PLATOON PROGRESSION INBOUND--
ENTRY IB-LAST OB LOCAL:   1<(0-50, 0=DIS)
                (0,30-55MPH) SPEED:  40
     DISTANCE FROM ENTRY LOCAL:          0
DISTANCE FROM ENTRY LOCAL DET:         450
        LOCAL ENTRY DETECTOR(2):   11   12
MASTER MID-SYS CRITICAL DETS(2):    0    0
           --PGDN(A) FOR OUTBOUND--
```

Intersection 19-2
Master intersection

```
      --PLATOON PROGRESSION INBOUND--
ENTRY IB-LAST OB LOCAL:   1<(0-50, 0=DIS)
                (0,30-55MPH) SPEED:  40
     DISTANCE FROM ENTRY LOCAL:       3000
DISTANCE FROM ENTRY LOCAL DET:           0
        LOCAL ENTRY DETECTOR(2):    0    0
MASTER MID-SYS CRITICAL DETS(2):    1    2
           --PGDN(A) FOR OUTBOUND--
```

Intersection 19-3
Outbound entry intersection

```
      --PLATOON PROGRESSION INBOUND--
ENTRY IB-LAST OB LOCAL:   0<(0-50, 0=DIS)
                (0,30-55MPH) SPEED:  40
     DISTANCE FROM ENTRY LOCAL:       3600
DISTANCE FROM ENTRY LOCAL DET:           0
        LOCAL ENTRY DETECTOR(2):    0    0
MASTER MID-SYS CRITICAL DETS(2):    0    0
           --PGDN(A) FOR OUTBOUND--
```

ENTRY IB - LAST OB LOCAL – The intersection number of the entry inbound intersection, which is also the outbound entry intersection. This data is entered at the entry inbound intersection and at the master intersection.

SPEED – The speed in miles per hour to be used in determining the offset for this intersection. The range is 30-55.

DISTANCE FROM ENTRY LOCAL – The distance in feet from the Inbound entry local to this intersection. The range is 0 – 65,000.

LOCAL ENTRY DETECTORS (2) – The local detector number of the Inbound entry detectors. The range is 1-32. This data is only entered at the Inbound entry intersection.

MASTER MID-SYS CRITICAL DETECTORS (2) – The master system detector number of the Inbound mid-system critical detectors. The range is 1-16. This data is only entered at the master intersection.

3rd Screen

Intersection 19-1

Inbound entry intersection

```
     --PLATOON PROGRESSION OUTBOUND--
ENTRY OB-LAST IB LOCAL:   0<(0-50, 0=DIS)
                (0,30-55MPH) SPEED:  40
     DISTANCE FROM ENTRY LOCAL:       3600
DISTANCE FROM ENTRY LOCAL DET:           0
        LOCAL ENTRY DETECTOR(2):    0     0
MASTER MID-SYS CRITICAL DETS(2):    0     0
   --PGDN(A) FOR INBOUND/OUTBOUND FO %---
```

Intersection 19-2

Master intersection

```
     --PLATOON PROGRESSION OUTBOUND--
ENTRY OB-LAST IB LOCAL:   3<(0-50, 0=DIS)
                (0,30-55MPH) SPEED:  40
     DISTANCE FROM ENTRY LOCAL:        600
DISTANCE FROM ENTRY LOCAL DET:           0
        LOCAL ENTRY DETECTOR(2):    0     0
MASTER MID-SYS CRITICAL DETS(2):    3     4
   --PGDN(A) FOR INBOUND/OUTBOUND FO %--
```

Intersection 19-3

Outbound entry intersection

```
     --PLATOON PROGRESSION OUTBOUND--
ENTRY OB-LAST IB LOCAL:   3<(0-50, 0=DIS)
                (0,30-55MPH) SPEED:  40
     DISTANCE FROM ENTRY LOCAL:           0
DISTANCE FROM ENTRY LOCAL DET:         600
        LOCAL ENTRY DETECTOR(2):   11    12
MASTER MID-SYS CRITICAL DETS(2):    0     0
   --PGDN(A) FOR INBOUND/OUTBOUND FO %--
```

ENTRY OB - LAST IB LOCAL – The intersection number of the entry outbound intersection, which is also the last inbound intersection. This data is entered at the entry inbound intersection and at the master intersection.

SPEED – The speed in miles per hour to be used in determining the offset for this intersection. The range is 30-55.

DISTANCE FROM ENTRY LOCAL – The distance in feet from the Inbound entry local to this intersection. The range is 0 – 65,000.

LOCAL ENTRY DETECTORS (2) – The local detector number of the Inbound entry detectors. The range is 1-32. This data is only entered at the Inbound entry intersection.

MASTER MID-SYS CRITICAL DETECTORS (2) – The master system detector number of the Outbound mid-system critical detectors. The range is 1-16. This data is only entered at the master intersection.

4th Screen

Intersection 19-1

Inbound entry intersection

```
PLATOON PROGRESSION INBOUND/OUTBOUND FO%
            --PHASE FORCE-OFF %--
INBOUND     1   3   4   5   7   8
SPLIT 1     50  15  35  50  15  35
SPLIT 2     0   0   0   0   0   0
OUTBOUND    1   3   4   5   7   8
SPLIT 1     50  15  35  50  15  35
SPLIT 2     0   0   0   0   0   0
```

Intersection 19-2

Master intersection

```
PLATOON PROGRESSION INBOUND/OUTBOUND FO%
            --PHASE FORCE-OFF %--
INBOUND     1   3   4   5   7   8
SPLIT 1     62  18  45  58  18  42
SPLIT 2     55  15  40  52  15  35
OUTBOUND    1   3   4   5   7   8
SPLIT 1     58  18  42  62  16  45
SPLIT 2     52  15  40  55  15  35
```

Intersection 19-3

Outbound entry intersection

```
PLATOON PROGRESSION INBOUND/OUTBOUND FO%
            --PHASE FORCE-OFF %--
INBOUND     1   3   4   5   7   8
SPLIT 1     64  0   45  60  0   42
SPLIT 2     0   0   0   0   0   0
OUTBOUND    1   3   4   5   7   8
SPLIT 1     60  0   45  64  0   42
SPLIT 2     0   0   0   0   0   0
```

PHASE FORCE-OFF% – For platoon progression split operation force-off percentages are needed for the non-coord phases (1, 3, 4, 5, 7 & 8). For these six phases there are percentages for split 1 & split 2 for both Inbound and Outbound operation. The range is 0 – 100 %.

Coordination Examples

The following are three examples of coordination setups. All three use a two intersection system on Main St. The two intersections are Main @ 1st and Main @ 2nd. They are 3000' apart and the speed limit on Main St. is 45 mph.

Coordination Example #1: Basic Coordination

The figure below shows the phasing (plan view) of two intersections with their associated circle diagrams. The intersections are coordinated with a single 90 second plan during most hours, except at night when they run free. There is vehicle detection for all phases except the Main St. through phases 2 and 6. There is pedestrian detection for phases 2, 4, 6 and 8. Both intersections operate in the Dwell mode with a short normal permissive of five seconds.

Figure 23:

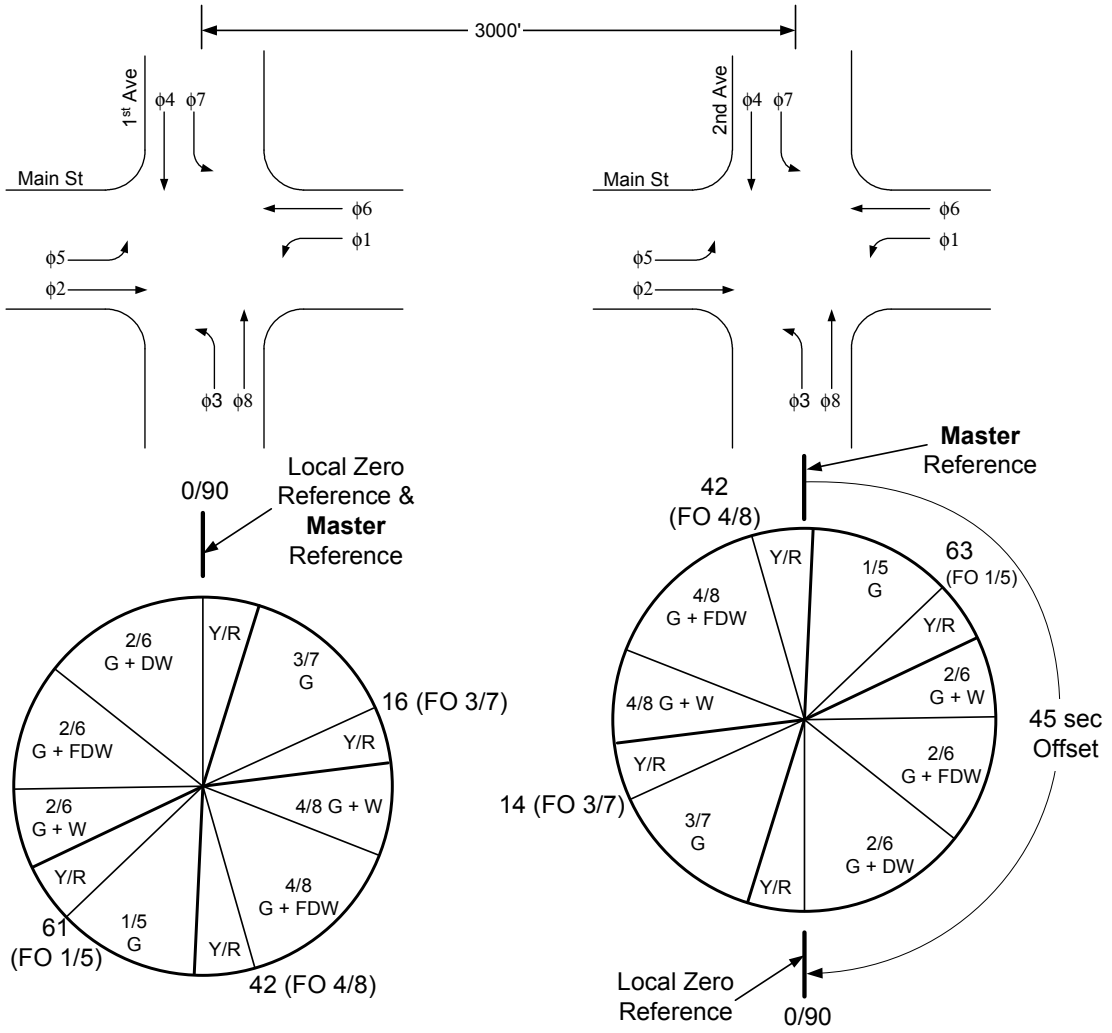

Coordination Example #1: Continued

Phase Data

Min Recall: Phases 2 and 6

Relevant Phase Times for Both Intersections

Phase	1	2	3	4	5	6	7	8
Min Green	3	20	3	6	3	20	3	6
Max 1 & 2	20	40	15	30	20	40	15	30
Walk		7		7		7		7
Ped Clear		12		10		12		14

Coordination Data

Main @ 1st

Coord Phases: 2 & 6 Cycle Length: 90 Dwell: 31
Offset: 0

Phase	1	2	3	4	5	6	7	8
Force-off	61	0	16	42	61	0	16	42

Main @ 2nd

Coord Phases: 2 & 6 Cycle Length: 90 Dwell: 31
Offset: 45

Phase	1	2	3	4	5	6	7	8
Force-off	63	0	14	42	63	0	14	42

Time of Day Data

Same for Both Intersections

Day program	Time	Coord Plan
1	0:00	0 - Free
1	6:00	1
1	20:00	0 - Free

Coordination Example #1: Continued

Notes on Free Operation

Late at night both intersections run free. There is no vehicle detection for phases 2 and 6 and they are programmed for Min Recall. When phases 2 or 6 begin, they will time at least 20 seconds of green. When there are no calls on phases 1, 3, 4, 5, 7 & 8 the controller will rest in phase 2 and 6 green. When a call is received, phase 2 and/or 6 will clear to allow service.

Notes on Coordinated Operation

At the speed limit of 45 mph the intersections are about 45 seconds apart (½ of the 90 second cycle length). The offset for Main @ 1st is **0**, while the offset for Main @ 2nd is **45**. Therefore, the intersections are said to be ½ cycle offset from each other.

Any unused phase time from a minor phase can be "thrown forward" to the next minor phases and main street phases. At Main @ 1st, phases 3 and 7 can be as long as 11 seconds. If phases 3 and 7 are skipped, or they gap-out prior to their force-off at 16, then phase 4 and/or 8 will start early. This effectively throws time forward from phases 3 and 7 to phases 4 and 8. If 3 and 7 were skipped, then 4 and 8 would start at 5 seconds into the local cycle (assuming they had demand). If 4 and 8 had constant demand they would extend out to time 35 when their Max Green timers would cause them to clear to yellow. The force-offs for phases 4 and 8 are at 42, 7 seconds after they maxed-out. Careful attention should be paid to the relationship between Min Green, Max Green and Force-Off times.

Coordination Example #2: Coordination Using Various Features

The following figure diagrams two intersections. They are coordinated with a 90 second plan during off-peak hours, two 100 second plans during AM and PM peaks and at night they run Free. There is vehicle detection for all phases except on through phases 2 and 6. At 3rd @ Main there is ped detection on phases 2 ,4 ,6, and 8. At 4th @ Main there is ped detection on phases 2, 3, 4, & 6. Both intersections operate in the fastway mode with alternate permissive, via a permissive setting of **0**. The plans at 3rd @ Main turn on various TOD circuits, and bring in various service plans and max plans.

Figure 24:

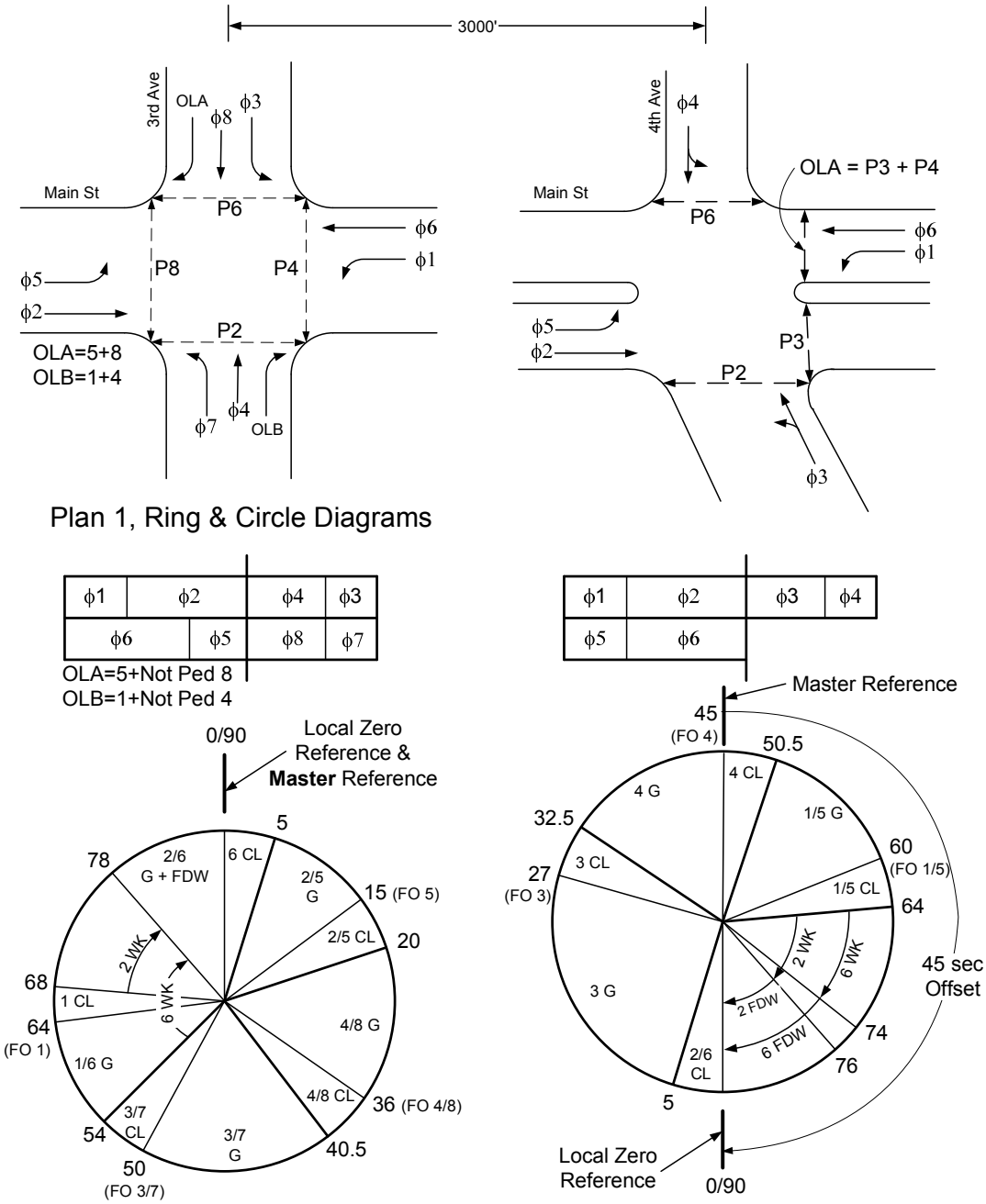

Figure 25: Coordination Example #2: Continued

Plan 2, Ring & Circle Diagrams

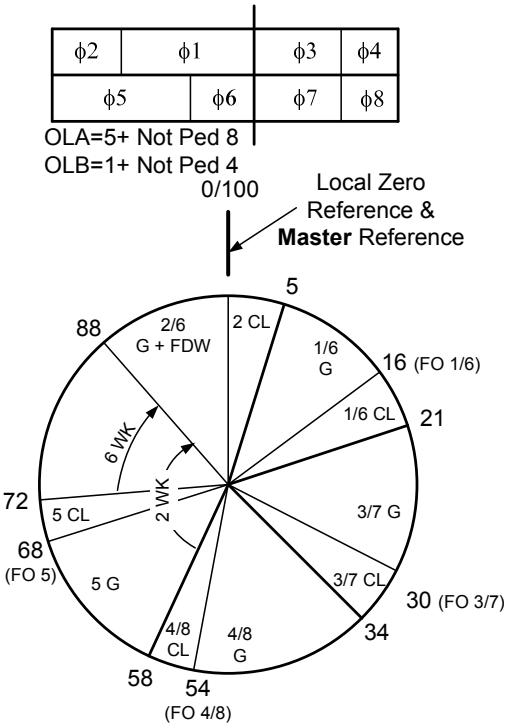

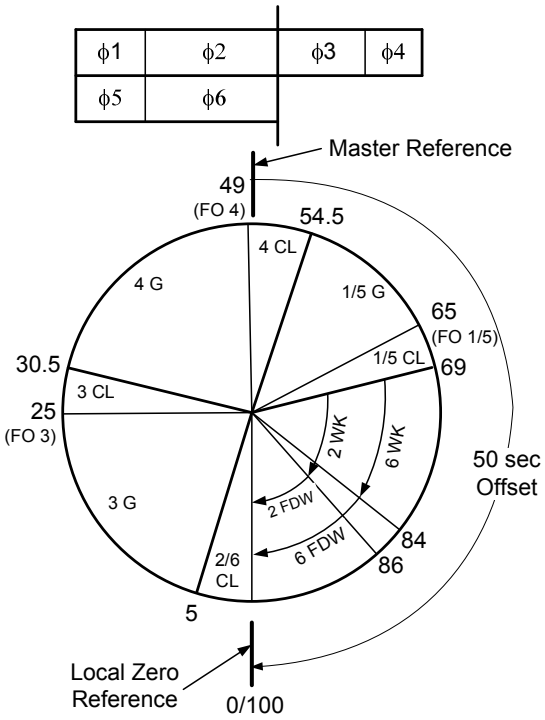

Plan 3, Ring & Circle Diagrams

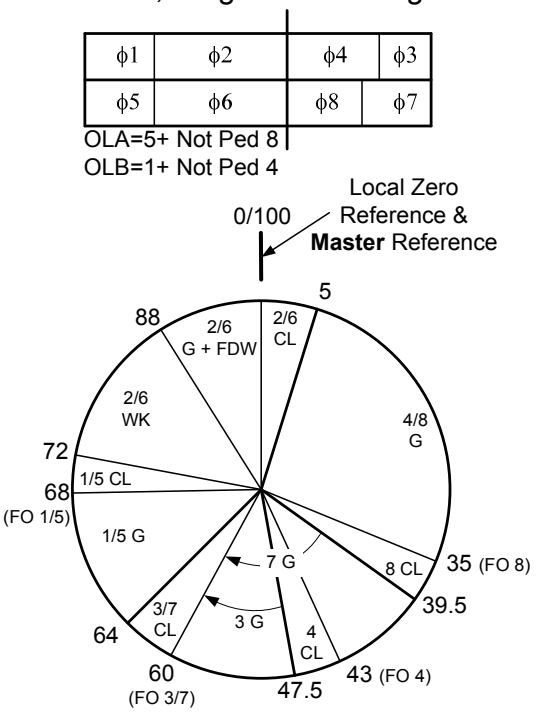

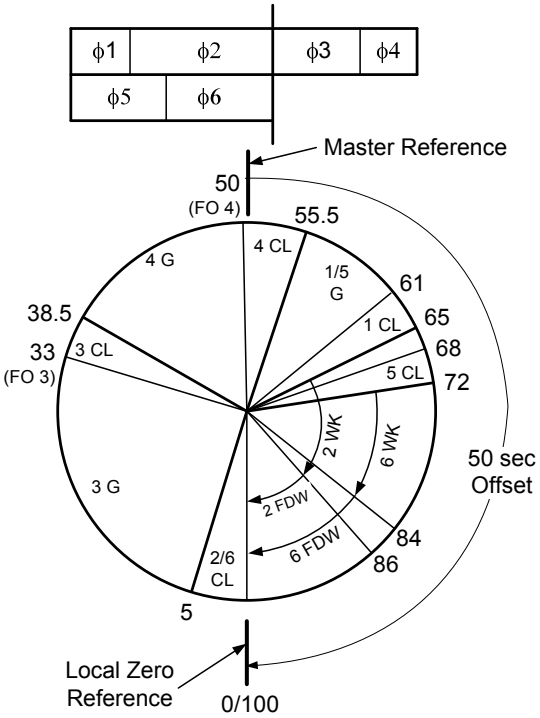

Main @ 3rd

Phase Data

Max-Out Recall Inhibit: 1, 3, 4, 5, 7, & 8
Soft Recall: 2 & 6
Relevant phase times

Phase	1	2	3	4	5	6	7	8
Min Green	3	20	3	6	3	20	3	6
Max 1 & 2	20	40	15	30	20	40	15	30
Walk		7		7		7		7
Ped Clearance		12		10		12		14

Overlap Data

Enables two side street Right Turn Overlaps
OLA: Phase 1 + Phase 4 (Not Ped)
OLB: Phase 5 + Phase 8 (Not Ped)

Coordination Data

Plan 1 - Offpeak

Coordinated Phases: 2 & 6 Cycle Length: 90 Min Cycle: 0
Offset: 0 Service Plan: 0 Max Plan: 0

Phase	1	2	3	4	5	6	7	8
Force-Off	64	0	50	36	15	0	50	36

Circuit Mapping associated with Plan 1

Circuit	Function
98	Lag 3
99	Lag 5
100	Lag 7
29	Vehicle Recall phase 5
60	Ped Override Mode

Plan 2 - AM

Coordinated Phases: 2 & 6 Cycle Length: 100 Min Cycle: 0
Offset: 0 Service Plan: 1 Max Plan: 1

Phase	1	2	3	4	5	6	7	8
Force-Off	16	0	30	54	68	0	30	54

Circuit Mapping associated with Plan 2

Circuit	Function
97	Lag 1

Changes enabled by Service Plan 1 which is associated with Plan 2
Phase 4 Walk: 10
Phase 8 Walk: 4
Phase 1: Max Recall
Phase 4: Ped Recall
Changes enabled by Max Plan 1 which is associated with Plan 2
Phase 4 Max: 35
Phase 8 Max: 35

Coordination Example #2: Continued

Plan 3 - PM

Coordinated Phases: 2 & 6 Cycle Length: 100 Min Cycle: 0
Offset: 0 Service Plan: 2 Max Plan: 2

Phase	1	2	3	4	5	6	7	8
Force-Off	75	0	60	43	75	0	60	35

Circuit Mapping associated with Plan 2

Circuit	Function
98	Lag 3
100	Lag 7

Changes enabled by Service Plan 2 which is associated with Plan 3
Phase 4 Walk: 4
Phase 8 Walk: 4
Phase 3: Min Recall
Phase 7: Min Recall

Changes enabled by Max Plan 12 which is associated with Plan 3
Phase 4 Max: 40
Phase 8 Max: 32

Main @ 4th

Phase Data

Soft Recall: 2 & 6
Relevant phase times

Phase	1	2	3	4	5	6
Min Green	3	10	8	8	3	10
Max 1 & 2	15	40	35	35	15	40
Walk		7	4	4		7
Ped Clearance		14	8	8		16

Main @ 2nd

Plan 1 - Off-peak

Coordinated Phases: 2 & 6 Cycle Length: 90 Min Cycle: 0
Offset: 45 Service Plan: 0 Max Plan: 0

Phase	1	2	3	4	5	6	7	8
Force-Off	60	0	27	45	60	0	0	0

Plan 2 - AM

Coordinated Phases: 2 & 6 Cycle Length: 100 Min Cycle: 0
Offset: 50 Service Plan: 0 Max Plan: 0

Phase	1	2	3	4	5	6	7	8
Force-Off	65	0	25	49	65	0	0	0

Coordination Example #2: Continued

Plan 3 - PM

Coordinated Phases: 2 & 6 Cycle Length: 100 Min Cycle: 0
Offset: 50 Service Plan: 0 Max Plan: 0

Phase	1	2	3	4	5	6	7	8
Force-Off	61	0	33	50	68	0	0	0

Time of Day Data

Same for both intersections

Day Plan	Time	Coord Plan
1	0:00	0 - Free
1	5:00	1
1	6:30	2
1	9:15	1
1	15:15	3
1	18:30	1
1	21:00	0
2	0:00	0
2	7:30	1
2	20:00	0

Internal Logic Data

Entry	Value	Line Description	Sub Module Description
1	201	2nd input true if 1st input true	
2	23	Input # (Ped Phase 3)	Call Ped 4 when Ped 3 button is
3	24	Input # (Ped Phase 4)	pushed.
4	202	Turn on input if phase in condition	
5	4	Phase	Call Ped 3 when Ped 4 is in FDW.
6	3	Pedestrian Clearance	
7	23	Input # (Ped Phase 3)	

Input Assignment

C1 Pin	Normal	New
70	8 Ped	3 Ped

Output Assignment

C1 Pin	Normal	New
19	8 DW	Ped Overlap A DW
20	8Wk	Ped Overlap A WK

Free Operation - Late at night both intersections run Free. There is no vehicle detection for phases 2 and 6 and they have Soft Recall. When there are no calls on phases 1, 3, 4, 5, 7, & 8 the controller will return to phases 2 and 6 and rest in green.

Coordinated Operation - (Plan 1) Main @ 3rd and Main @ 4th operate with a 1/2 cycle offset (similar to the first example). During coord operation there is recall placed on the coord phases and soft recall is overriden.

Coordination Example #3: Coordination w/ Actuated Coord Phases

This example demonstrates actuated coordination using the intersections from Example #1. There is vehicle detection for all phases. There is pedestrian detection for phases 2, 4, 6, & 8. Both intersections operate in the Fastway mode with alternate permissive, via a permissive setting of **0**. Main @ 1st has coordinated ped recall and Main @ 2nd does not. Main @ 1st uses sequence #1 with leading left turns. Main @ 2nd uses sequence #7 with lagging left turns for Main and with leading left turns for 2nd. At Main @ 2nd the coordination parameter Late Ped is enabled.

Figure 26a: Ring Diagrams and Circle Diagrams for Main @ 1st (left) and Main @ 2nd (right):

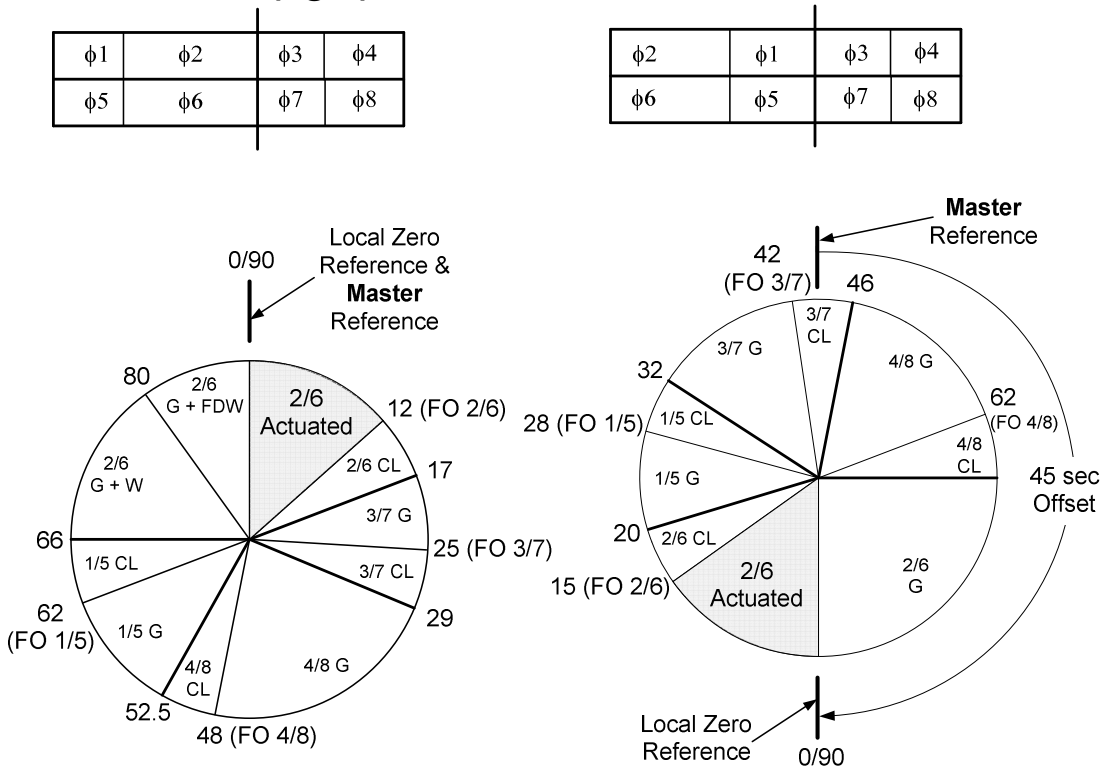

Both Intersections

Phase Data

Soft Recall: 2 & 6

Relevant phase times

Phase	1	2	3	4	5	6	7	8
Min Green	3	10	3	8	3	10	3	8
Max 1 & 2	20	60	18	35	20	60	18	35
Walk		7		7		7		7
Ped Clearance		10		9		10		9
Seconds/Act.		1.4				1.4		
Max Variable Int.		22				22		

Phases 2 and 6 use variable initial. There are loops 160' and 320' from the stopbar. To drive the variable initial 9 vehicles arriving on Red will be required. These 9 vehicles will put in 16 actuations.

Coordination Example #3: Continued

Coordination Data
Plan 1 - Main @ 1st

Coordinated Phases: 2 & 6 Cycle Length: 90 Min Cycle: 72
Offset: 0 Service Plan: 0 Max Plan: 0

Phase	1	2	3	4	5	6	7	8
Force-Off	62	12	25	48	62	12	25	48

Plan 1 - Main @ 2nd

Coordinated Phases: 2 & 6 Cycle Length: 90 Min Cycle: 0
Offset: 45 Service Plan: 0 Max Plan: 0

Phase	1	2	3	4	5	6	7	8
Force-Off	28	15	42	62	28	15	42	62

Time of Day Data

Same for both intersections

Day Plan	Time	Coord Plan
1	0:00	0 - Free
1	6:00	1
1	22:00	0 - Free

Free Operation - Late at night both intersections run Free. There is vehicle detection for phases 2 and 6 and they have Soft Recall. When there are no calls on phases 1, 3, 4, 5, 7, & 8 the controller will return to phases 2 and 6 and rest in green. During Free operation phases 2 and 6 will have variable minimum greens, as described above.

Coordinated Operation - (Plan 1) Main @ 1st and Main @ 2nd operate with a 1/2 cycle offset similar to the first example. At local zero, phases 2 and 6 will be able to extend out to their respective force-offs, if there are successive vehicle actuations on these phases.

Coordination Example #4: Lead/Lag with Non-Zero Yield Points

This example is for Main @ 3rd, with phase 5 lagging for all 3 plans. This makes phase 2 the lagging coord phase. Coordinated Rest in Walk is not enabled. There is vehicle detection for all phases except phase 6. There is pedestrian detection for phases 2, 4, 6, & 8. There can be a variety of relationships between Force-off 5, Force-off 2 & Yield Point Ring 1.

Settable Yield Points

The concept of settable yield points for each ring was created to give greater flexibility in coordination. For each ring there is a Yield Point. **A Yield Point has three actions**:

1. At the Yield Point the phase omits for non-coord phases of that ring are lifted.
2. If the Yield Point for a ring is greater than '0', then Hold will be applied to the coord phase of the ring from local cycle '0' to the Yield Point.
3. Ped Omit for the coord phase of a ring will be applied at the Yield Point for a ring, minus the (Walk + FDW) for the coord phase.

The prime use of yield points would be where there is lead/lag coord phase operation with large splits for the parallel left turns. In this instance the lagging coord phase could start very late in the cycle and extend into the next cycle. There are two main **issues that are addressed by yield points**:

1. To allow service for the pedestrian movement of the lagging coord phase which bridges across local zero, the yield point for the ring may need to be moved forward from zero to a positive value. From the last point in the cycle that the coord phase can go Green add the pedestrian time plus one second; this is the minimum value for the yield point.
2. To allow a progressive band traveling in the direction of the lagging coord phase to clear the intersection, before the coord phases go to Yellow. By example if phase 2 is a lagging coord phase and its progressive band will clear the intersection at 20 in the local cycle, then set yield point ring 1 at 20.

There is one restriction on coord plans that use settable yield points. The permissive must be set at '0' which enables alternate permissive.

Other uses are possible and the user is encouraged to experiment with yield points to tailor the coordinated operation to the needs of a particular intersection.

The three coord plans in this example deal with different relationships of Force-Off & Yield Point.

Plan 1: Yield Point Ring 1 = Force-off 2 = Force-off 5

Plan 2: Force-off 2 is less than Yield Point Ring 1 is less than Force-off 5

Plan 3: Yield Point Ring 1 is less than Force-off 2 is less than Force-off 5

Coordination Example #4: Continued

Figure 26b: Plan 1, Ring & Circle Diagrams

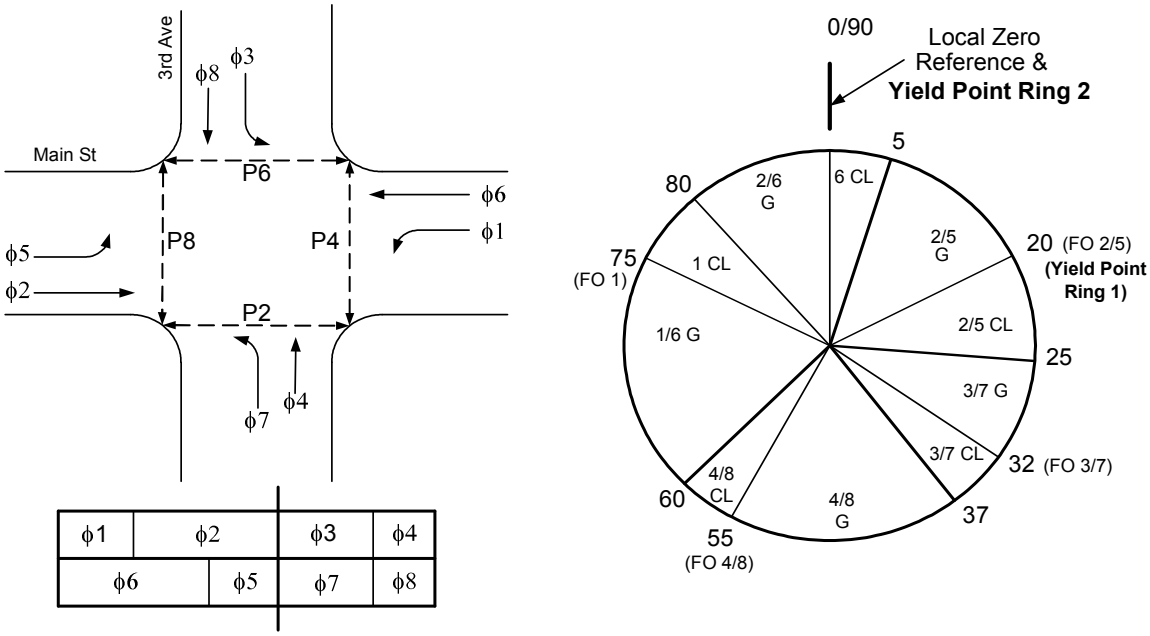

Plan 1 uses the force-off and yield point values created by the Auto-Calculation facility of NWSCentral. It allows the latest possible start of the phase 2 pedestrian service. It also guarantees that phase 2 will be held out as far as the phase 5 force-off. There is a consequence to having yield point ring 1 at the highest possible value. If there are conflicting calls on the other side of the barrier then phase 2 will stay Green out to yield point ring 1 (20), even if Phase 5 has gapped out.

The phase 2 ped is 7 + 15 = 22. It could have begun as late as 88 in the cycle.

Coordination Example #4: Continued
Figure 26c: Plan 2 Circle Diagram

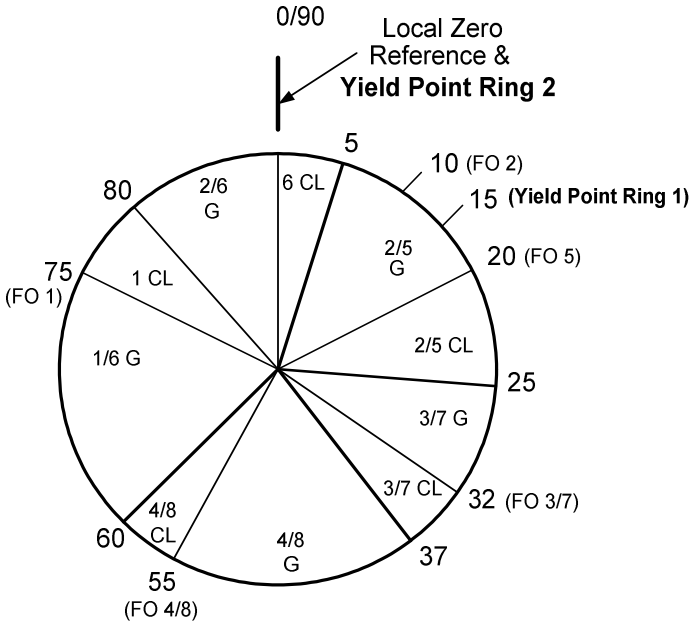

Plan 2 is similar to plan 1 but yield point ring 1 has been moved from 20 to 15 thus the last possible start of the phase 2 pedestrian service is moved back in the cycle by 5 seconds. Phase 2 ped could begin as late as 83 in the cycle.

The force-off for phase 2 has been moved from 20 to 10. At 0 phase 6 can clear to serve phase 5.

Case 1: There is no phase 5 call. From 0 to 10 no call on the other side of the barrier can be served. Remember that the yield point is ring based. Yield point ring 1 is set at 15 so the non-coord phases of ring 1 will be omitted until 15. Due to this a call on phase 7 or 8 can be served at 10, the value of force-off for phase 2. A call on phase 3 or 4 can be served at 15, the value of the yield point ring 1.

Case 2: Phase 5 has been called. Between 5 and 10 phase 5 serves its Min Green and is in extension. Between 10 and 20, phases 2 & 5 can stay Green as long as phase 5 has not gapped out. In the circle diagram it is assumed that a constant call on phase 5 extends phases 2 & 5 out to the phase 5 force-off (20).

Coordination Example #4: Continued

Figure 26d: Plan 3 Circle

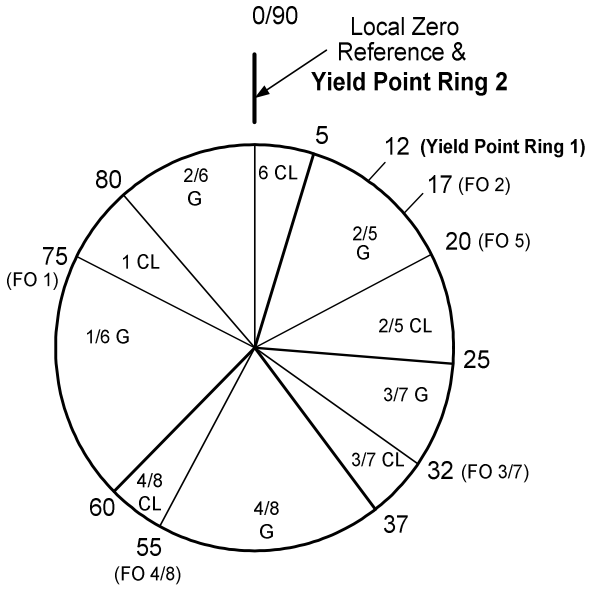

Plan 3 is similar to plan 2 but the yield point for ring 1 at 12 is now before the force-off for phase 2 at 17. **Ped Operation:** The start of the phase 2 pedestrian service is moved back in the cycle to its earliest possible point (80). Assuming that phase 1 goes out to its force-off (75) then phase 2 will begin at 80 and still be able to serve its ped.

Actuated Coordination: There is no call on phase 5. From 0 to 12 phase 2, and thus also phase 6, will be held in Green. At 12, if there is a call across the barrier and phase 2 is not in extension, then phases 2 & 6 will go to Yellow. Between 12 to 17, if there is a call across the barrier and phase 2 is in extension, then phases 2 & 6 will go to Yellow at 17, the phase 2 force-off.

Coordination Example #4: Continued

Main at 3rd

Phase Data

Relevant phase times

Phase	1	2	3	4	5	6	7	8
Min Green	3	10	3	8	3	10	3	8
Max 1 & 2	30	60	30	30	30	60	30	30
Walk		7		7		7		7
Ped Clearance		15		15		15		15

Sequence 7 with phase pairs 1-2 & 5-6 reversed by Coord Plan or TOD

Coordination Data

Plan 1

Coordinated phases: 2 & 6 Cycle Length: 90 Permissive: 0
Offset: 0 Service Plan: 0 Max Plan: 0
Rest In Walk: Off Yield Point Ring 1: 20 Yield Point Ring 2: 0

Phase	1	2	3	4	5	6	7	8
Force Off	75	20	32	55	20	0	32	55

Circuit Mapping associated with plan 1

Circuit	Function
99	Lag 5

Plan 2

Coordinated phases: 2 & 6 Cycle Length: 90 Permissive: 0
Offset: 0 Service Plan: 0 Max Plan: 0
Rest In Walk: Off Yield Point Ring 1: 15 Yield Point Ring 2: 0

Phase	1	2	3	4	5	6	7	8
Force Off	75	10	32	55	20	0	32	55

Circuit Mapping associated with plan 1

Circuit	Function
99	Lag 5

Plan 3

Coordinated phases: 2 & 6 Cycle Length: 90 Permissive: 0
Offset: 0 Service Plan: 0 Max Plan: 0
Rest In Walk: Off Yield Point Ring 1: 12 Yield Point Ring 2: 0

Phase	1	2	3	4	5	6	7	8
Force Off	75	17	32	55	20	0	32	55

Circuit Mapping associated with plan 1

Circuit	Function
99	Lag 5

Time Clock

The Voyage software includes a powerful and flexible time clock scheduling package. The time clock schedule controls, on a minute-by-minute basis, over 180 time clock circuits. Time clock circuits control various aspects of the traffic controller operation and can also drive load switch outputs.

The software allows for creation of a year-long operational schedule which runs different programmed events on a daily basis. The year-long schedule is broken down into individual weeks, each week can utilize any one of ten week programs. Each week program is broken down into day programs, which can run a unique program on each day of the week.

The controller's operating system (OS9) is used as the basic time reference. The time clock event schedule from the active day program is compared with the current time from OS9 to determine if a clock circuit should be on or off. This comparison is made on a minute-by-minute basis. There is also a battery-backed Real Time Clock (RTC) in the 2070 controller which continues keeping time during power interruptions. The RTC has its time updated by Voyage on a minute-by-minute basis during normal operation.

Clock Circuits

There are over 170 clock circuit functions available in the current version of the Voyage software. The circuits can be enabled/disabled by using manual override, programming the time clock scheduler, linking to a given coord plan, or using an Internal Logic program. Most of the circuits only provide internal control and do not have an associated output pin.

Each clock circuit can be operated as continuously ON (manually enabled), OFF (manually disabled) or TOD. In TOD mode, the function is controlled on a Time-of-Day basis by the time clock scheduler programming, coord plan linkage or an Internal Logic program.

The following table correlates each clock circuit function with its assigned circuit number:

Circuit Number	Circuit Description	Circuit Number	Circuit Description
1	Coord Line 1	2	Coord Line 2
3	Coord Line 4	4	Coord Line 8
5	Coord Line 16	6	N/U
7	Soft Flash	8	N/U
9	N/U	10	N/U

11	N/U	12	Min Recall
13	Max 2 (both rings)	14	Inhibit Max Ring 1
15	Inhibit Max Ring 2	16	Call to Free
17-24	TOD Output 1-8	25-32	Vehicle Call 1-8
33-40	Ped Call Phase 1-8	41-48	Vehicle Omit 1-8
49-56	Ped Omit 1-8	57	Conditional Service Enable
58	Inhibit Simultaneous Gap-out	59	Inhibit Hardwire Input
60	Ped Override Mode	61	Dual Entry
62	Exclusive Ped	63	Call to Time Clock Mode
64	Dual Enhanced Ped	65-72	Service Plan 1-8
73-80	Max Plan 1-8	81-88	Transit Group Timing Plans 1-8
89-96	Gap Reduction Inhibit Ph 1-8	97-100	Lead/Lag 1,3,5,7
101-104	Inhibit Overlap A-D	105-106	Enable Sch. A Call Phone 1&2
107-108	Enable Sch. B Call Phone 1&2	109-110	Enable Sch. C Call Phone 1&2
111-112	Enable Vol. Log Call Phone 1&2	113	Enable Volume Log
114	Enable MOE Log	115	Detector Low Fail Inhibit
116	Detector Presence Fail Inhibit	117	Inhibit Selected Detectors
118	Inhibit Detector Delay	119	Inhibit Conditional Ped
120	Inhibit Transit Priority	121-122	Red Rest Ring 1&2
123-124	Omit Red Clear Ring 1&2	125-126	Ped Recycle Ring 1&2
127-128	Enable MOE Log Call Phone 1&2	129-136	Inhibit Transit Short Timing 1-8
137	Enable Transit Log	138-141	Disable FYLTA 1, 3, 5, 7
142	Disable Auto Max	143	Disable Coord Double Cyc
144	N/U	145-152	Coord Hold Phases 1-8
153-156	PE Priority Return B-E	157	Platoon Progression Inbound
158	Platoon Progression Outbound	159	Platoon Progression Split 2

160	Coord Walk Rest	161-168	Dynamic Phase Length Inhibit Shortening Phase 1-8
169-172	Coord Late Left Turn Phases 1, 3, 5, 7	173-176	Dynamic Phase Length Enable Sets A-D
177-179	Proactive Plan Selection Average/In/Out	180-181	Split Variant Operation I/O
182-183	Disable Coord Walk Rest Ring 1/2	184	PPS New Look
185	Disable Red Clear Extension	186-187	Detector Plan 2-4 Enable
188-191	Disable LRT VFB 1-4 upon check in w/o TTG	192-255	N/U

The functional purpose of some time clock circuits is obvious from the names, however many require explanation.

- **Circuits 1-5** – Coord Lines. These circuits are only used in Run Mode displays to indicate which of the 32 coord plans is being called by the Day program. They are (base 2) bits that decode to the plan number. They have values of: 1, 2, 4, 8, & 16. As an example if CL1 and CL4 are on, then coord plan 6 (1+4, then add 1) is being called by the Day program. If the Day program is calling for Free then the five lines will show the last valid coord plan called for by the Day program. These five circuits are always in TOD mode and the mode can't be changed by the user. If the user drives the controller to a coord plan by placing a number, such as 4 in the Coord Plan Mode location, then these lines will show the last valid coord plan called for by the Day program, instead of the number entered in the Coord Plan Mode location.

Circuits 14-15 – Inhibit Max Ring 1/2. These time clock circuits are used to allow a phase to extend to its force-off with out regard to its max. This could cause significant problems during Free operation because there are no force-offs, thus the phase could extend infinitely. These circuits, when turned on, will only operate if the controller is in coordination.

- **Circuits 17-24** – TOD Outputs 1-8. Useful for enabling external 24V DC outputs. Output reassignment is necessary to use these circuits.

- **Circuit 57** – Conditional Service. Enables Conditional Service for left turn phases which have been programmed to accept activation by time clock circuit. Conditional Service can only be with Quad Dual Ring sequence and Lead/Lag sequence. Conditional Service is only active during Free operation.

- **Circuit 58** – Inhibit Sim Gap – This circuit works in concert with Inhibit Simultaneous Gap-Out per phase program entries in Options to inhibit simultaneous gap out by phase. When a phase is programmed and this circuit

is turn on, the phase can't revert from a gap out condition back to extension when another group of traffic comes along.

- **Circuit 59** – Inhibit Hardwire Input. If the controller has been programmed to operate in Hardwire Coord Mode, enabling this circuit will disable the Hardwire mode and cause the controller to use time-of-day programming for the selection of coord plans.

- **Circuit 60** – Ped Override Mode. A clock circuit function related to coordinated operation which, when enabled, modifies the operation of the controller when the ped split is larger than the vehicle split called for in the coord plan. This function allows infrequently serviced ped phases to be over-timed (run past the force-off point) without skipping or short-timing subsequent phases. It also causes the cycle timer to "freeze" for the period of time which the phase remains in ped service beyond the force-off point. After over-timing, the cycle timer will be out-of-sync but will re-sync via normal offset seeking.

  The user is **strongly** advised to use Fast Way offset seeking when ped override mode is enabled. When the actuated ped movement over runs the phase force-off, the local cycle timer will be out-of-sync by the amount overrun. This is normally a small percent of the cycle (<15%). With Fast Way the controller can immediately seek to get in-step by going short. If the dwell mode is used, the controller will have to dwell for segments of the cycle which add up to 85%.

- **Circuit 62** – Exclusive Ped. When enabled, ped phases 2, 4, 6, and 8 will operate simultaneously during an exclusive ped phase with no vehicle green. The exclusive ped phase follows the Red clearance of phase 2 and 6, and occurs while both rings are in Red Rest. The Walk and Flashing Don't Walk times for the exclusive pedestrian phase will come from phase 1. The Exclusive Ped is made up of three intervals, which are listed below. Immediately after completing the Exclusive Ped solid Don't Walk the controller will go to Green for the phase(s) that is the Next Phase(s). The pedestrian outputs for phases 2, 4, 6 & 8 will be used simultaneously. Exclusive Ped can only be used with sequence (1), Quad Dual Ring.

Interval	Duration
1. Walk	Value of Phase 1 Walk
2. Flashing Don't Walk	Value of Phase 1 Ped Clearance
3. Solid Don't Walk	Fixed value of 3.0 seconds

  Exclusive Ped in Coordination – When using Exclusive Ped in coordination the Coord Walk Rest field must be set to (0) to disable coordinated walk rest. Because the Exclusive Ped is served after the 2 & 6 Red Clearance, the force-offs for all minor phases after the Exclusive Ped should be moved forward.

- **Circuit 63** – Call to Time Clock Mode. Forces the controller to select coord plans based on time clock programming regardless of the normal programmed mode of selection. This can be used during normal peak hours, forcing the controller into time clock mode even though it is programmed for Comm Mode and receiving external coord plan commands from a master controller.

- **Circuit 64** – Dual Enhanced Ped. When active, if both thru's have ped calls, but if one thru walk comes on before the other, it will rest at the end of walk until the other thru walk comes on and times out. Both peds will then clear together. The "rest in walk" will not occur if there is no ped call on the opposite ring thru phase. Only works with Sequence 1, 8-Phase with leading left turns.

- **Circuits 81-88** – Transit Group Timing Plans 1-8. Activate the transit priority group timing plans. The highest numbered, active Group Timing Plan will override all others.

- **Circuits 89-96** – Gap Reduction Inhibit Phase 1-8. Activation of these circuits inhibits the gap reduction operation for the associated phase, disabling the use of TBR, TTR and Min Gap.

- **Circuits 101-104** – Inhibit Overlap A-D. Provide for time-of-day overlap inhibits which force the associated overlap into red until deactivation of the circuit. Clearances are obtained from the overlap delay yellow and red, while min green will time at least five seconds. The Inhibit Overlap circuits do not override overlap operation called for by a preempt sequence. When the preempt sequence allows an overlap, it will be allowed even if clock inhibited. Overlaps A-D can also be inhibited by Preempt programming.

- **Circuits 105-110** – Enable Schedule X Call Phone 1 & 2. Relate to automatic call-in reports when the software is programmed for direct dial-up. A number of functions can be assigned to Schedule A, B, C or Request Only log. Schedule A, B, and C can call in using telephone 1 or 2 depending on which clock circuits are activated. When using these circuits, the rate of call-in for certain functions can be pre-determined. For example, high priority functions can be assigned to Schedule A and the A phone circuits could be enabled all or much of the time. Schedule B could call in once a day and Schedule C could call in once a week. Also, the circuits can be used to call one phone number, during the day (when the maintenance facility is open) and another at night (after hours response).

- **Circuits 111-112** – Enable Volume Log Call Phone 1 & 2. Allow volume logs to be automatically called in according to the programming of the time clock schedule. The Voyage software must be operating in direct dial mode to initiate a call to either two phone numbers.

- **Circuits 113-114** – Enable Volume and MOE Log. Allow the logging of volume and MOE data during the desired time of the day only. The circuits can be manually programmed “ON” to count at all times.

- **Circuits 115-116** – Detector Low/Presence Fail Inhibit. The circuits can be applied at specific times to prevent detector failures. Detector Low Inhibit disables no activity and low threshold monitors. Detector Presence Inhibit disables constant call. Typically, DLI would be applied in the morning hours and DPI would be applied at rush hour (particularly if long loops are used which might be continuously occupied).

- **Circuit 117** – Inhibit Selected Detectors. When enabled, any detectors which have been pre-programmed for inhibited operation will be inhibited. This can inhibit any or all of the 32 detector inputs.

- **Circuits 127-128** – Enable MOE Log Call Phone 1 & 2. Allows MOE logs to be automatically called in according to the programming of the time clock schedule. The software must be operating in direct dial mode to initiate a call to either two phone numbers.

- **Circuits 129 -136** – Inhibit Transit Short Timing, Phases 1-8. When activated, prevents the associated phase from shortening during a transit priority event.

- **Circuit 137** – Enable Transit Log. Allow the logging of transit data during the desired time of the day only. The circuits can be manually programmed “ON” to log at all times.

- **Circuit 138-141** – Disable Flashing Yellow Left Turn Arrow, Phase 1, 3, 5, 7. Similarly, to disable the protected green left turn arrow, use circuits 41, 43, 45, and 47.

- **Circuit 142** - Disable Auto Max. This disables the Auto Max function that is used to have the phase maximum Green incrementally rise and fall.

- **Circuit 143** - Disable Repeated Phase Service. This disables the Repeated Phase Service function that is used during coordination to provide service of a minor phase for more than once per cycle.

- **Circuits 145-152** - Coord Hold Phase 1-8. This is used for non-coord phases during coordination. When activated for a non-coord phase a Hold is placed on the phase during coordinated operation. This will not call the phase, however if the phase is called it will be held until its force-off. Thus the phase will not gap out or max out. This function would typically be used to provide secondary coordination to the side street phases 4 & 8.

- **Circuits 153-156** – Preempt Priority Return Sets B – E. In Preempt Priority Return there are 5 sets of Green percentages for each phase. These

percentages are used to determine if a phase should be served when leaving preemption with a 95 code. The default group is A. These TOD circuits are used to select a group (B, C, D or E) instead of group A.

- **Circuit 157** - Platoon Progression Inbound. Turning on this circuit at a local will enable Inbound Platoon Progression coordination, if this circuit is also turned on at every other local in the system.

- **Circuit 158** - Platoon Progression Outbound. Turning on this circuit at a local will enable Outbound Platoon Progression coordination, if this circuit is also turned on at every other local in the system.

- **Circuit 159** - Platoon Progression Split 2. Turning on this circuit will cause split 2 force-off percentages to be used when in Platoon Progression.

- **Circuit 160** – Coord Walk Rest. In the coord modes area the Coordinated Walk Rest can be set to mode 2, which is TOD. Turning on this circuit will enable Coord Walk Rest when it's mode is set to mode 2. This allows the function to be turned on by the day program or to be linked to a coord plan via circuit mapping.

- **Circuits 161-168** - Dynamic Phase Length Inhibit Shortening Phases 1-8. When enabled, by phase, it will prevent the phase force-off or Max Green from being reduced by Dynamic Phase Length.

- **Circuits 169-172** - Coord Late Left Turn Phases 1, 3, 5 & 7. Only operates with sequence 1 Quad Left Turn or sequence 7 Lead/Lag during coordination. The circuits are assigned respectively to phases 1, 3, 5 & 7. When enabled allows for another potential period of service for a left turn that opposes a coordinated phase. Consider that circuit 169 for phase 1 is turned on and the cycle length is 120 seconds and the force-off for phase 1 is at 70. The permissive period for serving phase 1 begins at (Cycle Length – Coord phase clearance - Phase 1 conditional service max -). This permissive period is open for 6 seconds. If phase 2 gaps out during this permissive period and there is a call on phase 1 then ring 1 will clear phase 2 and go to the phase 1 Green. Once in the phase 1 Green it **must** remain there until the end of the cycle. The allowable time for coord late left turn is controlled by the conditional service max.

- **Circuits 173-176** - Dynamic Phase Length Enable Sets A-D. These circuits are used to enable Dynamic Phase Length. Only one circuit should be turned on at a time. The circuit enabled determines which set of Delta Force-Off and Delta Maximum values will be used.

- **Circuits 177-179** – System Mode 2 only - Proactive Plan Selection Average/Inbound/Outbound. There is a special operation for selecting a coordination plan within plans 1-16. This operation is called Proactive Plan

Selection. This operation is further divided into periods when the traffic flow is one of the following: Average, Inbound or Outbound. These three circuits are used to enable Proactive Plan Selection for the following traffic characteristics.

Circuit	Traffic Flow
177	Average
178	Inbound
179	Outbound

- **Circuits 180-181** – System Mode 2 only - Split Variant Operation Inbound/Outbound. There is a special operation for selecting a coordination plan within groups of 3 coordination plans with the same cycle length and offset. This operation is called Split Variant Selection. This operation is further divided into periods when the traffic flow is one of the following: Inbound or Outbound. These two circuits are used to enable Split Variant Operation for the following traffic characteristics.

Circuit	Traffic Flow
180	Inbound
181	Outbound

- **Circuits 182-183** – Disable Coord Walk Rest, Ring 1 and Ring 2. These circuits allow Coord Walk Rest to be disabled by ring for those situations where it is desireable to rest on only one side of the main street.

- **Circuits 184** – System Mode 2 only - Proactive Plan Selection New Look. This circuit forces a “new look” at the current VPLUSKO in comparison to threshold values. Allows the customization of Proactive Plan Selection.

- **Circuits 186-187** – Use circuit 186 to activate Detector Plan 2. Circuit 187 will activate Detector Plan 3 and both circuits, when on together, will activate Detector Plan 4.

Year Program

The year program is used to assign a specific week program to each week of the year. Every week begins on Sunday and ends on Saturday, except for the partial weeks at the beginning and end of the year. Including the partial weeks there are 53 separate weeks. Often the same week program is used for each week of the year therefore the utility clear load defaults to Week Program 1.

Week Programs

The week program is used to specify the day program to be used on each day of the week. A typical week program might use Day Program #1 on all five weekdays and Day Program #2 on the weekend. There are 10 week programs available. Clear load defaults to Day Program 1.

Day Programs

A day program is used to schedule the events which occur on a specific day. There are 200 separate events and each can be assigned to a single day program. There are 15 possible day programs and each can have one or more events. Therefore, the total number of events used by the 15 day programs can not exceed 200.

There are two types of day program events; events which call for a specific coord plan and events which enable/disable a clock circuit function. Only one type of day program event can be programmed per clock event.

At midnight (00:00) the scheduler will turn off all time clock circuits called for by a day program. Therefore, it is important to re-activate any needed clock circuits at 00:00, if they need to continue to function past midnight. This insures that no stray time clock circuits are left active from a previous day program.

Exception Days

Up to 35 exception days are provided to override the normally assigned day program on specific days of the year. Specify the day-of-week/week-of-month/month-of-year (i.e. Labor Day) or day-of-month/month-of-year (i.e. Christmas)) and the chosen day program which will override the normal program on that day.

Daylight Savings Time

The Voyage software provides an enable/disable option for daylight savings adjustments. When enabled, the unit will automatically adjust daylight savings; forward on the first Sunday in April and backward on the last Sunday in October.

Sync Reference (Coordination)

When coordination is in effect, the coord cycle is referenced to the time clock by an internal time based reference. This reference is accomplished by setting the Master Timer to zero at a point in time which is an exact number of cycles (based on the current cycle length in operation) from the Sync Reference time. The software will automatically correct the Cycle/Offset/Master Timers during power-up to the Sync Reference time. There are two types of Sync References:

- Timed Reference – A daily reference which can be programmed to occur at any time of the day (the default value is midnight). The coord cycle will be continuously referenced to this time. When a coord plan event change occurs, the unit will offset seek (if needed) to bring the new plan into sync with the reference point.

- Event Reference – In this type of reference the software references the cycle timer to the beginning of the event which calls for a coord plan.

Time Clock Programming Screens

To make changes to Time Clock programming, bring up the **MAIN MENU** by pressing **NEXT**

```
                --MAIN MENU--

        1.RUN MODE        3.UTILITIES

        2.PROGRAM MODE

        -- AUX Switch ON = Stop Time --
            --USE F KEY FOR HELP--
```

Select 2. **PROGRAM MODE**

```
            --PROGRAM MODE MENU--

1.SECURITY CODE  5.PREEMPTION     8.I/O
2.CONTROLLER     6.COMM/REPORT      CONFIG
3.COORDINATION   7. TRANSIT       9.INTERNAL
4.TIME CLOCK        PRIORITY        LOGIC
```

Select 4. **TIME CLOCK**

```
      --TIME CLOCK PROGRAMMING MENU--

1.DAYS PROG   4.CKT OVERRIDE  6.EXCEPT DAYS

2.WEEK PROG   5.DLS/RES.TIM/   7.TIME SET
                SYNC REF.
3.YEAR PROG     MODE & TIME
```

Select 1. to change the **DAY PROGRAM** settings.

```
INSERT        --DAY PROGRAMS--   (200 TOTAL)
DAY       EVENT              COORD...CIRCUIT#
PROG      TIME               PLAN#..0=OFF/1=ON
  1<      06:00                          32 1

DAY PROG+1-15, EVENT TIME= HH:MM, COORD
PLAN=0-32,  CIRCUIT 0/1=0-255 0/1=OFF/ON
EVENT:    1      --PGDN(A)/UP(B) FOR MORE--
```

The DAY PROGRAM screen is used to view or edit day program events. Only a single day program event is displayed on the screen at a time. Events are displayed in chronological order. There are two modes of operation INSERT and EDIT. The INSERT mode allows day program events to be added, deleted or viewed. To edit, delete or view day program events, use the EDIT mode. The current mode is displayed in the upper, left hand corner of the screen. Press **+** to enter the INSERT mode and **-** to enter the EDIT mode.

To program a new day program event, enable the INSERT mode (press **+**) and do the following:

DAY PROG: Load a Day Program number, 1 – 15 and cursor once to the right.

EVENT TIME: Load up to 4 digits in the HH:MM format and cursor once to the right.

COORD PLAN: Load the number of the desired plan (0-32) and press the **ENT** key before moving the cursor. **NOTE**: **0** = Free.

-or-

CIRCUIT #: If the event does not activate a coord plan, an individual time clock circuit can be turned on and off. From the Event Time, move the cursor twice to the right. Load the Circuit # (1-255) followed by either **1** (ON) or **0** (OFF). Press the **ENT** key before moving the cursor. For example, to turn on the clock circuit for Max Plan 2 (Circuit 74), keystroke **741** and press **ENT**. **NOTE**: Clock circuits are listed in the Help screen (press **F** and page down).

To load the event press **ENT**. To program the next event, enter the new event parameters without paging down and the event counter (bottom, left corner of the screen) will increase by one event. To view events, page down (**A**) and page up (**B**).

To delete an event, locate the desired event, move the cursor to the Circuit # field, and enter **0** for the Circuit #.

To edit an existing day program event, enable the EDIT mode (press **-**) and do the following:

Find the Event	There are two ways to locate a specific event. First, page down until the event is displayed. Second, go directly to the event by placing the cursor under the Day Program column, keystroke the desired Day Program number, right cursor, keystroke the desired Event Time, press **ENT** and the exact event will be displayed. **NOTE:** If only the Day Program number is entered the first chronological event of that Day Program will be displayed.
Change Only the Day Program Number	Place the cursor under the Day Program column, keystroke the desired Day Program number, right cursor to the Coord Plan # or Circuit # (whichever is programmed), keystroke the existing value and press **ENT**.
Change Only the Event Time	Place the cursor under the Event Time column, keystroke the desired time, right cursor to the Coord Plan # or Circuit # (whichever is programmed) and press **ENT**.

Change Only the Coord Plan # or Circuit #	Place the cursor under the Coord Plan # or Circuit # column, keystroke the desired value and press **ENT**.

Page Down (**A**) to program **WEEK PROGRAMS**

```
--WEEK PROGRAMS--    S   M   T   W   T   F   S
 WEEK  DAY OF WEEK   1   2   3   4   5   6   7
    1   DAY PROGRAM 1<  1   1   1   1   1   1
    2   DAY PROGRAM 1   1   1   1   1   1   1
    3   DAY PROGRAM 1   1   1   1   1   1   1
    4   DAY PROGRAM 1   1   1   1   1   1   1
    5   DAY PROGRAM 1   1   1   1   1   1   1
          --PGDN(A)/UP(B) FOR MORE--
```

```
--WEEK PROGRAMS--    S   M   T   W   T   F   S
 WEEK  DAY OF WEEK   1   2   3   4   5   6   7
    6   DAY PROGRAM 1<  1   1   1   1   1   1
    7   DAY PROGRAM 1   1   1   1   1   1   1
    8   DAY PROGRAM 1   1   1   1   1   1   1
    9   DAY PROGRAM 1   1   1   1   1   1   1
   10   DAY PROGRAM 1   1   1   1   1   1   1
          --PGDN(A)/UP(B) FOR MORE--
```

To edit the Week Programs, move the cursor to the desired location, load a new Day Program number and press **ENT**.

Page Down (**A**) to program the **YEAR PROGRAM**

```
                --YEAR PROGRAM--
FROM: MOY/DOM  TO: MOY/DOM   WEEK PROGRAM
        01/01<        12/31                1

Start with 1/01, then use Sundays. After
entering 'TO:' date, the display will
increment to the next Sunday. Continue
until the 'TO:' date equals 12/31.
```

The Year Program allows the calendar year to be broken into segments associated with different Week Programs. For example, an intersection heavily influenced by school traffic could run Week Program #1 during the school year and Week Program #2 during the summer. (The default uses Week Program #1 for the entire year). As an example of how to edit the Year Program, Week Program #2 will be enabled from June 1 through August 20. First, move the cursor to **FROM: MOY/DOM** and load **06/01**. Move the cursor right to **TO: MOY/DOM** and load **08/20**. Move the cursor right to **WEEK PROGRAM** and load **2**. Finally, press **ENT** to enter the data. To view the new Year Program segments, page down (**A**) or page up (**B**). The software automatically adjusts new segments to start on Sunday and end on Saturday.

Page Down (**A**) to program **CIRCUIT OVERRIDES**

```
            --CIRCUIT OVERRIDES--
CIRCUIT       1    2    3    4    5    6    7    8
FUNCT       CL1 CL2 CL4  CL8  C16 SYS SFL UCF
MODE          2<   2    2    2    2    2    2    2
CIRCUIT       9   10   11   12   13   14   15   16
FUNCT       CN1 CN2 WRM MIN MX2  IM1  IM2 CTF
MODE          2    2    2    2    2    2    2    2
PAGE  1  OF  8          --PGDN/UP TO CONTINUE--
```

Time clock circuits can operate in one of three modes, Always On (Mode=1), Always Off (Mode=0) or Time of Day (Mode=2). The default mode for all circuits is Time of Day, therefore circuits can be turned on and off by time clock programming, coordination circuit mapping or internal logic programming. There are eight screens which together display all the available time clock circuits. Each circuit is identified by a circuit number and a three letter description. (See the help screen for the full name of each circuit function).

To change the mode of a circuit, move the cursor to the circuit, load a new mode value and press **ENT**.

Page Down (**A**) to program **DLS/RESET TIME/SYNC REFERENCE:**

```
     --DLS/RESET TIME/SYNC REFERENCE--

SYNC REFERENCE: MODE: 0<        TIME: 00:00
(MODE: 0= TIMED REFERENCE, 1= BY EVENT)

DAYLIGHT SAVINGS: 1        RESET TIME: 00:00
(0= OFF, 1=ON)         (TIME UPDATE BY INPUT)
          --PGDN(A)/UP(B) FOR MORE--
```

Select a Sync Reference Mode by entering either **0** (Timed Reference) or **1** (By Event). If a Timed Reference is used, a reference time must be programmed. Daylight Savings mode can be enabled by entering **1** in the appropriate field. If an external device is used to update the Voyage clock (WWV or GPS receiver) the Reset Time should be programmed to coincide with the input pulse.

Page Down (**A**) to program **EXCEPTION DAYS:**

```
              --EXCEPTION DAYS--
EX.DAY  DOW  WOM---DOM   MOY   DAY PROGRAM
   1              <     0     0        0
   2                    0     0        0
   3                    0     0        0
   4                    0     0        0
   5                    0     0        0
PAGE  1  OF  7      --PGDN(A)/UP(B) FOR MORE--
```

Any of 35 available Exception Days can be programmed by entering a **DOW/WOM/MOY** date (Day of Week, Week of Month, Month of Year) or a

DOM/MOY date (Day of Month) and a Day Program. When using the DOW/WOM/MOY format, the DOW is a number from 1 to 10. 1 = Sunday, 7 = Saturday, 8 = Every Day, 9 = Weekdays, and 10 = Weekend Days.

Page Down (**A**) to program **SET DATE AND TIME**

```
--SET DATE AND TIME--

DATE:  10/30/02     TIME: 11:30:00   DOW: WED

WEEK OF YEAR: 44

After loading date, load time.
--PGDN(A)/UP(B) FOR MORE--
```

The Date and Time can be changed by moving the cursor to the desired field and entering the desired value. The Date is entered in the form of day/month/year, load six consecutive digits and press **ENT**. The Time uses a “military” 24-hour clock in the form of hour/minute/second. For example, 1:35:00 in the afternoon will be displayed as 13:35:00. The DOW (Day-of-Week) and Week-of-Year are calculated automatically from the current Date. Note: If Daylight Savings is enabled, do not set the time during the “Fall back hour” (the Sunday of the last week of October, between 01:00 and 02:00 in the morning).

Preemption

The Voyage software has a sequence type preemptor which allows programming of eight independent preemption sequences. This type of preemption is able to preempt from normally operating phases and transition to a user specified preemption sequence. Each EV (Emergency Vehicle), RR (Railroad), and/or Light Rail Train (LRT) input is linked to one of eight preemption sequences.

Programming a preemption sequence can vary in complexity:

1. A simple EV preemption sequence for phases 2 and 5 will involve two programming steps (intervals). The first interval drives the controller to phases 2 and 5 green. The second interval tells the controller to leave preemption after the Emergency Vehicle has passed through the intersection.

2. A more complex preemption sequence could have up to 10 intervals with entrance and exit parameters.

Each of the eight preempt sequences have 10 available preemption intervals. When preempted, the sequence preemptor will seek to enter the initial preemption interval, within the constraints of the standard controller minimum timings and programmed Entry Parameters. The initial preempt interval can be programmed to preempt to a certain phase, or an all red condition. Once the initial preemption interval has begun, the preempt programming determines the subsequent phasing sequence. Each preempt interval, following the initial interval, can be programmed to select a phase(s), time the green duration or hold-on-input, turn on/off any signal output, flash any signal indication and/or toggle on/off any preempt outputs.

The preemptor is capable of running a pulse initiated, timed sequence, an input duration sequence or a combination thereof. When preempted, the preemptor operates as follows:

- If in yellow or all red of any non-preempt entry phase, the controller will continue to time the change/clearance intervals until completion. After which the controller will proceed directly to the initial preemption interval phase without regard for the “phase next decision”. Clearing overlaps may require special consideration.

- If in yellow or all red of the preempt entry phase, the controller will continue to time the change/clearance intervals until completion. Then, the controller will time any relevant Red Revert. The unit shall proceed from this point directly to the preempt entry phase.

- If in green of any non-preempt entry phase, the controller will complete the standard minimum timings or use the minimum timings of the Entry Parameters, if programmed, prior to clearing the phase.

Exiting from preemption in a manner which helps the intersection recover from the negative effects of preemption is crucial. Therefore the Voyage software includes several important recovery capabilities. First, the software remembers all un-serviced vehicle and pedestrian calls which were placed in memory before preemption or during preemption. Following preemption, these calls will receive service. Second, the final preempt interval can be programmed to place vehicle calls on any or all phases, to ensure that desired phases receive service. Third, there are several programmable Exit Parameters which allow the controller to run special coordination plans, run max times or go free for a user-settable duration following preemption. Fourth, there is a special exit instruction 95 that is used for Priority Return. Priority Return looks at the phases that were shortened while entering preemption. If those phases weren't able to display at least a certain percent of their maximum Green, then the preemption will send the controller back to those phases to satisfy the 95 exit instruction. Last, another useful exit instruction, 202, allows the return to the phase(s) that has been forced to wait the longest.

Preempt Intervals

Each of the eight preempt sequences have 10 available preemption intervals. A simple sequence uses only two intervals, one to enter into preemption and hold a phase green and one to exit from preemption. More complicated sequences use additional intervals. Each interval offers the following programmable entries:

- Instruction – There are 24 available instructions which can be used to dictate the operation of a particular interval. There are instructions for the initial interval, exit interval and body of the preemption sequence. Information on when to use the instructions is given under the headings Sequence Parameters and Exit Parameters.

- Phases – Instructions allow for the selection of phases to be serviced during preemption (see descriptions of instructions **0**, **93**, **96**, **99**, **101, 200,** and **201**)..Phases selected with other instructions are ignored.

- Time – Dictates the minimum duration of the interval from 0 – 255 seconds for all instructions except 100, 101, 200, and 201. If Hold-on-Input is active, the interval will be held if the preempt input is active.

- Hold-on-Input (HOI) – If on, HOI will hold the controller in the interval beyond the Time setting, as long as the preempt input is active.

- Preempt Outputs – There are eight Preempt Outputs which can be used to drive devices (preempt indicator lights, part-time restriction signs, light rail signs) as called for in a preemption sequence. Any or all of the eight preempt outputs can be turned on during any interval. If not programmed, the output will remain off or will be turned off if it was on during the previous interval.

- Flash Mode (FLM) – The preempt outputs can be controlled by employing one flash mode. 0 = All steady on, 1 = All flash together, 2 = Odd outputs flash wig and even outputs flash wag and 3 = 1-4 steady on and 5-8 all flash together.

Entry Parameters

Entry Parameters are functions and timers used to control the transition from normal controller operation to the preemption sequence or from one preempt interval to another. In addition, they are also used when moving from one preempt sequence to another.

Priority

This programming determines the relative priority of each sequence, eight being the highest and zero being the lowest. A higher priority sequence will override a lower priority sequence, even if already in the lower priority sequence. The controller will leave the active sequence and serve the higher priority sequence, clearing phases as necessary. Preempts of equal priority are served on a first come, first serve basis. A preempt sequence will not be overridden by a preempt of equal or lower priority.

The priority setting also determines if the preempt sequence will be served during a time clock initiated flashing operation (night time flash). If priority levels seven or eight are selected, preemption will override flash, serve the preempt sequence and then return to flashing operation. If priority levels are selected one through six, the preempt input will be ignored during time clock initiated flash.

NOTE: If Special Intervals or soft flash are active and a higher priority sequence becomes active, the controller will advance to and time the next Interval, then the next and so on until the controller gets to a non-Special or Non-Soft Flash Interval from which it can proceed in a normal fashion to the higher priority sequence. If the controller needs to override a preempt during Special Intervals, it will time no more than five seconds in any one Special Interval.

Preempt During Flash

A preempt call will not override a conflict flash condition. However, preemption can override a time clock initiated flash condition (controlled flash) depending on the level of priority (0-8) selected for the preempt sequence.

- Priority = 7 or 8 (High). The controller will leave flash and serve the preemption sequence and then return to a flashing condition if a flash command is still active.

- Priority = 0 to 6. The controller will not leave flash to serve preemption. If an intersection is in a controlled flash state, and the flash command goes false while a preempt sequence is active, the intersection will not leave flash until the preempt call also goes false.

If a preempt input is active during start-up (initialization) the intersection will serve the start-up entry phases and then proceed to the preempt sequence, if the priority of the sequence is 7 or 8. If the priority is 0-6, the intersection will not leave flash until the preempt call goes false.

Memory

When the memory function is enabled, a preempt call is remembered until the preempt sequence is completed. Memory is enabled on a per preempt input basis. If a higher priority preempt sequence is called while the controller is serving a lower priority sequence, the preemptor will leave the current sequence to go to the higher priority sequence. The memory for the lower priority sequence will then be erased.

When the memory function is off, the call is not remembered, but normally, the demanded preemption sequence will start immediately and follow through until completion. Once the preemption call has been recognized and the controller is seeking to enter the preemption sequence, it will complete the preemption sequence whether memory is on or off. Memory off only has a significant effect if the input has a programmed delay before preempt, the call goes away during the delay period, preemption will not be served.

Delay

Each of the eight preempt inputs has a programmable delay timer (0 – 255 seconds). The timer starts when the preempt input is activated and the preempt input is not recognized until the timer times out. If a delay time is programmed and the memory function is turned off and the preempt call goes away during the delay period, the call will not be served.

As an option, Voyage software allows the controller to be programmed to omit vehicle and/or ped phases (non-preempt entry phases) during the last portion of the delay period.

Minimum Reservice

A minimum reservice time is provided for each preemption sequence, which makes it possible to restrict the occurrence of the same sequence successively. The time is programmable from 0 – 255 minutes. The minimum reservice timer begins at the termination of a preempt sequence. Future calls for the same sequence will not be recognized until the minimum reservice timer expires.

This feature can be used with lower priority preemption sequences to prohibit excessive preemptions. The time should be set at zero for high priority sequences such as emergency vehicle and rail preemption. This will allow no restriction on successive preemptions.

Overlap Inhibits and Overlap Yellow and Red

Overlaps A – D can be individually inhibited during any or all preemption sequences (overlaps E – L can not be inhibited). If an overlap is inhibited, it will be cleared upon entry into the preempt sequence and will remain red throughout. If any overlaps require clearing due to inhibiting or the controller overriding a This Phase Next decision (the overlap is still green but needs to be cleared) the controller will clear them prior to beginning the preempt sequence. Special clearance timings for overlap clearance/change intervals are obtained from programmable entries for overlap yellow and red (0 – 25.5 seconds).

Preempt Transition Timings

Preempt Transition Timings determine the controllers responsiveness to the associated preempt input, during the transition from normal operation to the preempt sequence. Each of the eight preempt sequences has its own Transition Timings. These timings override normal controller phase timings for Min Green, Walk, and Ped Clear. However, if the value **0** is placed in any of these three settings, the normal programmed phase values will be used. Any value from 0.1 – 25.5 seconds will override normal phase timings during transition into the preemption sequence.

Transition Timings can be used when moving from one interval into another within a preempt sequence. They come into play after the minimum time programmed for the interval has timed-out. The Transition Timings can be used when moving from a currently active preempt sequence into a higher priority sequence.

These settings are on a per preempt input basis. Therefore the responsiveness of each input can be adjusted. For example, high priority preempts such as emergency vehicle and railroad sequences might use low values for a rapid response. Low priority sequences, such as transit, might use higher values since there is less urgency to get into preemption.

The overlap yellow and red timings provide clearance times for inhibited overlaps prior to the preemption sequence (0 – 25.5 seconds).

Ped Omit and Vehicle Omit

These functions allow the controller to omit vehicle and ped phases during the last seconds of the preempt delay period. During the omit period, an omitted phase will not be prevented from timing if it is already being served. However, if the omitted phase is a non-entry phase (the first phase in the preempt sequence) and is green while vehicle omit is applied, the non-entry phase will turn yellow if the phase has been green for the length of the Transition Time Min Green. If a non-entry phase is in Walk while pedestrian omit is applied, the non-entry phase will turn to ped clearance if Walk has been displayed for the length of the Entry Time Walk. The non-entry phase will be held in green and ped clearance, prior to turning yellow, for one of the following reasons:

1. The remaining length of PE Delay if the normal ped clearance time is longer than the remaining length of PE Delay.

2. The length of the normal ped clearance if it is less than the remaining length of PE Delay.

A preempt delay time must be used in conjunction with these functions and the time period for the omits can not exceed the overall delay.

Sequence Parameters

Sequence Interval Instructions

The following are instructions which can be assigned to preemption intervals:

- **0** Instruction **0** causes the preemption sequence to move to the vehicle phases assigned in the phase entry. (Peds are inhibited when using this instruction). If non-compatible phases are selected, the Voyage software allows them to cycle normally. This instruction can be used in any preempt interval except the last.

- **1-9** Instructions **1** through **9** cause a Special Interval to be used. These instructions should not be used in the initial preempt interval or the last interval.

- **10** Instruction **10** is very similar to instruction **0** except that it allows Flashing Yellow Left Turn signals to return during preemption.

- **90** Instruction **90** causes the intersection to go to an all red condition. This instruction can be used in any preempt interval except the last.

- **91/92** Instructions **91** and **92** cause the intersection to go into and out of flash. Flashing operation will be achieved by immediately activating the Soft Flash programming (any phases/overlaps not programmed will flash red). These instructions should not be used in the initial preempt interval. <u>Instruction **91** should be in an interval which follows an interval displaying All Red (**90**)</u>. Instruction **92** should be used in an interval which comes after the interval using instruction **91** (but not the last interval).

- **93/94** Instructions **93** and **94** enable/disable ped service in the selected phases. Ped phases are served only when a ped call exists. Instruction **93** enables ped service and can be used in any preempt interval except the last. Instruction **94** should be used in an interval which comes after the interval using instruction **93** (but not the last interval).

- **96** Instruction **96** enables the coordinator to run during preemption and serve the selected phases. The currently active coord plan will provide

the needed coord timing values. This instruction should not be used in the last interval. Ped service is allowed when a **96** instruction is active.

- **100** Instruction **100** causes the preemptor to jump to a specific interval if the preempt input is active. The destination interval is specified in the Time entry. This instruction can be used in any preempt interval except the first or last.

- **101** Instruction **101** causes the time entry to be used as a resetable gap timer (for preempt input) and serves the phases programmed. This instruction can be used in any preempt interval except the last.

- **200** Instruction **200** supports Light Rail Train operation with NO concurrent ped service. Use of this instruction activates all LRT-related timers and outputs, based on user programming. The Time entry is the maximum amount of time that the solid vertical bar will be displayed. If non-compatible phases are selected, the Voyage software allows them to cycle normally. This instruction can be used in any preempt interval except the last.

- **201** Instruction **201** supports Light Rail Train operation WITH concurrent ped service. Use of this instruction activates all LRT-related timers and outputs, based on user programming. The Time entry is the maximum amount of time that the solid vertical bar will be displayed. If non-compatible phases are selected, the Voyage software allows them to cycle normally. This instruction can be used in any preempt interval except the last.

Special Intervals

A Special Interval is called for by using one of the instructions, 1 through 9, for an interval instruction. They are used when normal preempt steps by themselves cannot control the phase and overlap outputs as completely as needed to do the job. Special Intervals bridge this gap by allowing the user to take control of the phase/overlap outputs on a step-by-step basis (up to 9 steps). When entering Special Intervals normal controller operation is suspended at the end of the last preempt interval until the manipulation of the phase/overlap outputs is done.

The following rules apply to the use of Special Intervals:

1. The controller is suspended therefore the 1st special interval must be a safe display, relative to the suspended state of the controller.

2. The controller must exit Special Interval control by using a Special Interval which is safe, relative to the suspended state of the controller.

Special Intervals can have an impact on the ability of the controller to terminate the preemption sequence to serve a higher priority sequence. See the Entry Parameters/Priority Section.

Exit Parameters

Exit Interval Instructions

The last programming interval in each preemption sequence should include an exit instruction. The following are available exit instructions:

- **95** Instruction **95** can be used as the last instruction in the sequence. It enables an exit mode called Priority Return.
- **98** Instruction **98** can be used as the last instruction in the sequence. It causes the controller to return to normal operation with no additional vehicle calls.
- **99** Instruction **99** can be used as the last instruction in the sequence. It causes the controller to return to normal operation with vehicle calls on the selected phases.
- **202** Instruction **202** can be used as the last instruction in a sequence. It initiates a special recovery method called Queue-Delay Recovery.

Priority Return

Priority Return allows the immediate return to phases that were vacated “early” due to preemption. Priority Return is enabled if the last instruction in a preempt sequence is 95. To understand Priority Return think back to the 1st instruction, the preempt entry instruction. The entry instruction is most frequently ‘0’ with one or two phases associated with it. The intersection has a number of phases in its normal sequence. Relative to the 1st preempt instruction there is a group of phases that are the non-entry phases. If any of these non-entry phases are Green when the preempt becomes active they can be driven to Yellow to facilitate movement to the entry phases. The purpose of Priority Return is to return to those non-entry phases that were Green, if they had not been able to display a Green longer that a set value. Thus if phase 4 was only allowed to serve its Min Green of 6 seconds it would be advantageous to go back to phase 4 because its was cut short during preempt entry.

Vehicle Priority Return Percentages - For each of the eight phases there are five sets of percentages for Priority Return. The percentage is used to determine a number of seconds of Green for a phase by multiplying the Max Green by the percentage. So if the Max Green for phase 4 is 30 and the percentage is 50% then the priority return time for phase 4 is 15.

1. If phase 4 had been Green for less than 15 seconds when it was forced to Yellow, to enter a preempt, then when the 95 instruction is seen as the last instruction in the preempt sequence, return to phase 4.

2. If phase 4 had been Green for 15 seconds or more when it was forced to Yellow, to enter a preempt, then when the 95 instruction is seen as the last instruction in the preempt sequence, don't return to phase 4. Instead go to the next phase in the normal sequence, which has demand.

To ensure that a non-entry phase will not be returned to, via Priority Return, set a percentage of 0%. To make it very likely that a phase will be returned to, via Priority Return, set a high percentage such as 60% - 80%. As this percentage is decreased the likelihood that the phase will be returned to is diminished.

Vehicle Priority Return Sets – There are 5 sets of Priority Return percentages; A-E. The default set is set A. The other sets B – E are called by TOD circuits 153-156.

Pedestrian Priority Return Percentages – For pedestrian phases there is also a Priority Return function that depends on the percent of the normal pedestrian clearance. If the length of time that the pedestrian clearance was displayed is shorter than the time derived from this percentage then the controller will return to this phase and give a new pedestrian service.

Queue-Delay Recovery

Queue-Delay Recovery is enabled if the last instruction in a preempt sequence is 202. The purpose of Queue-Delay Recovery is to return to those non-entry phases that have waited the longest for service. Using the back detectors from Dynamic Phase Length (See Coordination/Dynamic Phase Length), vehicle queues and wait times are monitored continuously. The phase that has waited the longest, weighted by the number of vehicles, will receive service upon the termination of the preempt sequence. This feature was designed specifically to be used with LRT sequences or any rail sequence where long or repeated preemption events occur. It would also be beneficial for locations where repeated emergency vehicle preemptions are known to occur and particular phases are repeatedly skipped.

Exit to Coord Plan

This function can run a special coord plan following preemption for a programmable period of time (1 – 60 minutes). A special coord plan can change the phase splits to favor phases neglected during preemption. The value entered is added to the currently active master coord plan number to arrive at a plan number for the temporary plan. For example, if a value of 10 is entered and the currently active master coord plan is plan #1, the temporary coord plan will be plan #11. This procedure is needed to accommodate the many coord plans in operation over the course of a day.

Associated with the selection of a coord plan is the coord timer, programmable from 1 – 60 minutes. The temporary coord plan will normally run for the duration of the timer and then revert back to the normal coord plan. However, if there is a plan change which occurs while the temporary coord plan is running, the temporary plan will be canceled and the newly called plan will take effect.

It is possible to maintain coordinated synchronization when exiting preemption if certain conditions are met. First, coordination should be enabled during the preempt sequence by using instruction **96**. The currently active coord plan will then be in operation during preemption. Second, the coord plan selected to follow preemption should have the same cycle length, offset and coord phases as the coord plan used in preemption. If these steps are taken, no offset seeking will be needed after the controller leaves preemption.

Exit to Max Plan

This function runs a special max plan following preemption for a programmable period of time (1 – 60 minutes). A special max plan can be used to favor phases neglected during preemption. A separate max plan can be selected on a per preempt input basis.

Temporary max plans are associated with a programmed timer, either the coord timer or free timer, which range from 1 – 60 minutes. The temporary max plan will run for the duration of the timer and then revert back to normal max times.

Exit to Free

This function forces the controller into free operation following preemption for a programmable period of time (1 – 60 minutes). This can clear out queues caused by preemption. Using this function with a temporary max plan can help to favor phases which need more time after preemption.

Exit to Free is associated with a free timer (ranging from 1 – 60 minutes). Free operation will take place for the duration of the timer and then allow the controller to proceed to coordinated operation, if requested.

Exit Mode Timer

The Exit Mode Timer is used to enable or disable Exiting to a Coord Plan, a Max Plan or Free. The time that the controller is in the preempt sequence is the time from entering the 1st instruction to exiting the last instruction. The Exit Mode Timer will enable these exit functions only if the time in the preempt was longer than a time set in this timer. If the time in the preempt is shorter than the time set in the timer then these exit modes will not be used.

Override Timer

The Override Timer is used to disable a preempt input if the input remains on for the duration of the timer. The timer begins counting down when the preempt input becomes active. If the input is disabled it will not be useable again until the input becomes inactive. This function can be used to mitigate the effects of an inadvertent preemption call (an emergency vehicle parked with an active preempt calling device). The preempt status run screen will display **0** if a preempt override is in effect. **NOTE**: If the continuous presence of a preempt call is a problem, consider using the Fail Timer in place of the Override Timer. Fail timer will cycle the controller to soft flash.

Fail Timer

The Fail Timer is used to place the intersection in flash if the preempt input remains on for the duration of the timer. The timer begins when the preempt input becomes active and will reset if the input becomes inactive. However, if the timer expires while the input is still active, the intersection will go into soft flash and will require maintenance service. Flashing operation will be achieved by immediately activating Soft Flash.

A failed preempt event will be displayed on the main controller run screen and the preempt status run screen. It can also be logged onto a schedule log. **NOTE**: If the continuous presence of a preempt call is not a problem which demands flashing the intersection, consider using the Override Timer instead of the Fail Timer. Be sure to program soft flash.

Preempt Inputs and Outputs

Eight preempt inputs and outputs are available in the Voyage software. The first four inputs are mapped to pins on the standard connector. The other four are available using input/output reassignment. All inputs and outputs are considered true if grounded (ground true logic). Preempt outputs are typically used to enable indicator lights or signs related to a preempt sequence.

Light Rail Train

The Light Rail Train (LRT) algorithm operates within the Preemption module of the software. There are 8 available preemption sequences in the Voyage software. At a typical intersection, 4 of the sequences would be used for emergency vehicle preemption, leaving 4 sequences for heavy rail, LRT, or other. An intersection that has bi-directional LRT would likely only use a single preemption sequence.

There are three basic elements to programming an LRT preempt. First, data is required in the Light Rail Train programming screen. Second, the preempt sequence associated with the LRT must be programmed. The preempt sequence would use either the 200 or the 201 instruction depending upon whether or not ped service was allowed during the LRT movement. Last, I/O mapping is needed to provide the additional inputs and outputs for LRT service.

Inputs for LRT	**Outputs for LRT**
Ped Inhibit LRT 199	LRT Horizontal Bar 157-160
Check-in w/ TTG 200-203	LRT Vertical Bar 167-170
Check-in w/o TTG 204-207	LRT Advanced Signal 177-180
Check-out 208-211	

Typical LRT Sequence of Events

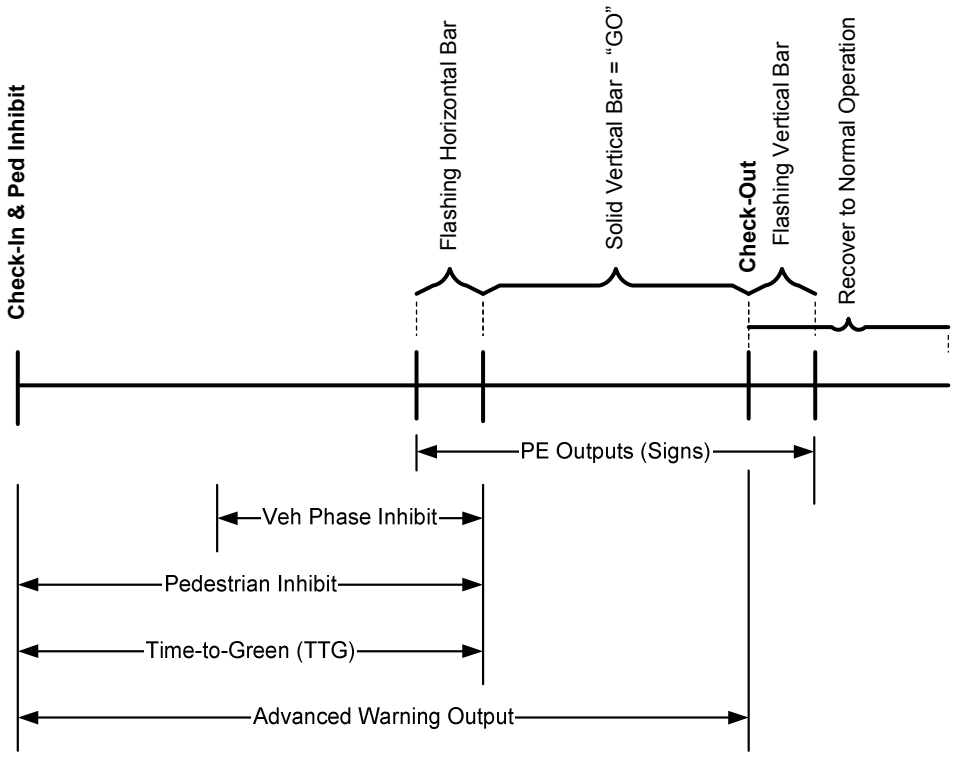

Preemption Programming Screens

To make changes to Preemption programming, first bring up the **MAIN MENU** by pressing **NEXT**

```
--MAIN MENU--

1.RUN MODE        3.UTILITIES

2.PROGRAM MODE

-- AUX Switch ON = Stop Time --
--USE F KEY FOR HELP--
```

Select 2. **PROGRAM MODE MENU**

```
--PROGRAM MODE MENU--

1.SECURITY CODE  5.PREEMPTION     8.I/O
2.CONTROLLER     6.COMM/REPORT      CONFIG
3.COORDINATION   7. TRANSIT       9.INTERNAL
4.TIME CLOCK        PRIORITY        LOGIC
```

Select 5. **PRE-EMPTION PROGRAMMING MENU**

```
--PRE-EMPTION PROGRAMMING MENU--

0.HI PE SETUP              9.SPEC INTERVALS 1-9

1-8.PROG SEQ'S 1-8
```

Select 0. **HI PE SETUP**

```
--PE SETUP PROGRAMMING MENU--

1.PRIORITY/MEM/       4.DELAY OPTIONS
  DEL/MIN RESVC       5.EXIT MODES/FAIL
2.OVERLAPS A-D           TIMES
  INHIBITS            6.PRIORITY RETURN
3.TRANSITION TIMES    7.LIGHT RAIL TRAIN
```

Select 1. **PRIORITY/MEMORY/DELAY/MINIMUM RESERVICE**

```
-PE INPUT PRIOR/MEM/DELAY/MIN RESERVICE-

INPUT        1   2   3   4   5   6   7   8
PRIOR        0<  0   0   0   0   0   0   0
MEMORY       0   0   0   0   0   0   0   0
DELAY        0   0   0   0   0   0   0   0
MIN RES      0   0   0   0   0   0   0   0
     --PGDN(A)/UP(B) FOR MORE--
```

INPUT: One of the eight separate preemption inputs, each tied to a unique preemption sequence.

PRIORITY: Enter a priority value from 1 to 8, (8 being the highest priority).

MEMORY: 0=Off, 1=On.

DELAY: 0-255 seconds.

MIN RESERVICE: 0-255 minutes.

Page Down (**A**) to program **PE OVERLAP A-D INHIBITS**

```
          --PE OVERLAP A-D INHIBITS--
PE-1  PE-2  PE-3  PE=4  PE-5  PE-6  PE-7  PE-8
ABCD ABCD ABCD  ABCD  ABCD  ABCD  ABCD ABCD
X  X   X  X<

 Use Keys 1-4 to toggle Inhibit on or off
        ' '= NORMAL, 'X'= INHIBIT OVERLAP
          --PGDN(A)/UP(B) FOR MORE--
```

This programming determines if overlaps A-D are to be allowed during preemption. **NOTE**: Other overlaps, E-L, cannot be inhibited. Program an **X** below the appropriate preempt input number 1-8 and overlap designation A-D to inhibit (clear to red) an overlap during a particular preemption sequence. For example, the screen above shows overlaps A and C are inhibited during preemption sequences 1 and 2. All other overlaps continue to operate during these preemption sequences. **NOTE**: An inhibited overlap will clear using the yellow and red times as programmed on the PE TRANSITION TIMINGS screen.

Page Down (**A**) to program **PE TRANSITION TIMINGS**

```
          --PE TRANSITION TIMINGS--
INPUT              1   2   3   4   5   6   7   8
MIN GRN            .0< .0  .0  .0  .0  .0  .0  .0
WALK               .0  .0  .0  .0  .0  .0  .0  .0
PED CLR            .0  .0  .0  .0  .0  .0  .0  .0
O/L YEL            .0  .0  .0  .0  .0  .0  .0  .0
O/L RED            .0  .0  .0  .0  .0  .0  .0  .0
  --PGDN/UP FOR MORE--  RANGE: 0-25.5 SECS.
```

MIN GREEN: Used for all phases not called for in the first (or next) preemption interval. It will replace the Min Green value of the currently operating phase, unless a **0** value is programmed, in which case the normal Min Green time will be used. Range is 0-25.5 seconds.

WALK: Used for all phases not called for in the first (or next) preemption interval. It will replace the Walk value of the currently operating phase, unless a **0** value is programmed, in which case the normal Walk time will be used. Range is 0-25.5 seconds.

PED CLEAR: Used for all phases not called for in the first (or next) preemption interval. It will replace the Ped Clear value of the currently operating phase, unless a **0** value is programmed, in which case the normal Ped Clear time will be used. Range is 0-25.5 seconds.

O/L YELLOW: Used to clear inhibited overlaps A-D to yellow. Range is 0-25.5 seconds.

O/L RED: Used to clear inhibited overlaps (A-D) to red. Range is 0-25.5 seconds.

Page Down (**A**) to program **PE DELAY OPTIONS**

```
              --PE DELAY OPTIONS--
INPUT              1  2  3  4  5  6  7  8
PED OMT            0< 0  0  0  0  0  0  0
VEH OMT            0  0  0  0  0  0  0  0
(0-255 seconds)
This value is the last part of the delay
when non-PE ped/phase omits are applied.
 --PGDN/UP FOR MORE--  USED FOR ENTRY ONLY
```

PED & VEH OMIT: This programming can be used to omit ped phases and/or vehicle phases associated with non-preempt entry phases (the phases that are not the phases in the first preempt interval) during the last **X** seconds of the delay period. A delay time must be programmed in order to use this function. Range is 0-255 seconds.

Page Down (**A**) to program **PE EXIT MODES, OVERRIDE/FAIL TIMES**

```
  --PE EXIT MODES, OVERRIDE/FAIL TIMES--
INPUT              1  2  3  4  5  6  7  8
EXIT TM            0  0  0  0  0  0  0  0
CPLN +X            0  0  0  0  0  0  0  0
CRD TIM            0  0  0  0  0  0  0  0
MAX PLN            0  0  0  0  0  0  0  0
FRE TIM            0  0  0  0  0  0  0  0
              --PGDN(A)/UP(B)--
```

EXIT TM: Begins timing down after entering the 1st instruction in the sequence. If the timer is not timed out when exiting the preempt sequence, then the exit modes (Coord Plan, Max Plan or Free) are **not enabled**. If the timer is timed out when exiting the preempt sequence then the exit modes (Coord Plan, Max Plan or Free) are enabled. Range is 0-60 minutes.

CPLN + X: Adds the programmed value **X** to the currently active coordination plan to initiate a temporary, user-programmed, coordination plan which is tailored for the specific preemption sequence. Range is 0-20.

CRD TIM: The value of the timer which determines the duration of the special coord plan after exiting preemption. Range is 0-60 minutes. **NOTE**: This timer may also be used for timing a special Max Plan after preemption.

MAX PLN: Allows the programmed Max Plan value to be run temporarily following preemption. Use either CRD TIM or FRE TIM to set the duration of the temporary Max Plan.

FRE TIM: Setting a non-zero value in this timer causes the controller to go to free operation after exiting preemption. Range is 0-60 minutes. **NOTE**: This timer may also be used for timing a special Max Plan after preemption.

Page Down (**A**) to program **PE EXIT MODES, OVERRIDE/FAIL TIMES**

```
--PE EXIT MODES, OVERRIDE/FAIL TIMES--
INPUT          1   2   3   4   5   6   7   8
OVR TIM        0   0   0   0   0   0   0   0
FAIL TM        0   0   0   0   0   0   0   0


   --PGDN(A) FOR PRIORITY RETURN--
```

EXIT TM: Begins timing down after entering the 1st instruction in the sequence. If the timer is not timed out when exiting the preempt sequence, then the exit modes (Coord Plan, Max Plan or Free) are **not enabled**. If the timer is timed out when exiting the preempt sequence then the exit modes (Coord Plan, Max Plan or Free) are enabled. Range is 0-60 minutes.

CPLN + X: Adds the programmed value **X** to the currently active coordination plan to initiate a temporary, user-programmed, coordination plan which is tailored for the specific preemption sequence. Range is 0-20.

CRD TIM: The value of the timer which determines the duration of the special coord plan after exiting preemption. Range is 0-60 minutes. **NOTE**: This timer may also be used for timing a special Max Plan after preemption.

MAX PLN: Allows the programmed Max Plan value to be run temporarily following preemption. Use either CRD TIM or FRE TIM to set the duration of the temporary Max Plan.

FRE TIM: Setting a non-zero value in this timer causes the controller to go to free operation after exiting preemption. Range is 0-60 minutes. **NOTE**: This timer may also be used for timing a special Max Plan after preemption.

OVR TIM: Override Timer – Disables the PE input if active for the programmed time. To use this function, enter a value of 1-60 minutes.

FAIL TM: Fail Timer - Disables the PE input if active for the programmed time and also cycles the controller to Soft Flash. To use this function, enter a value of 1-60 minutes.

Page Down (**A**) to program **PE PRIORITY RETURN**

```
 -PE PRIORITY RETURN- PRIOR RET MODE:  1<
PHASE      1   2   3   4   5   6   7   8
PRA %      45  50  15  37  45  50  16  33
PRB %      20  65  50  45  18  60  50  40
PRC %      0   0   0   0   0   0   0   0
PRD %      0   0   0   0   0   0   0   0
PRE %      0   0   0   0   0   0   0   0
PCL %      0   30  0   45  0   30  0   45
```

MODE: A value of 1 enables Priority Return and a value of 0 disables it.

PRIORITY RETURN PERCENTAGES: Percentages of max time for each phase for determining Priority Return. There are 5 sets for vehicles A-D and one set for pedestrian clearance.

Page Down (**A**) to program **PE 1 SEQUENCE**
Page Down (**A**) to program additional preempt sequences.

```
--PE 1 SEQUENCE--          --PGDN/UP FOR MORE--
              -PHASES-            -PE-OUT-
INT  INSTR  12345678  TIME  HOI 12345678  FLM
 1     0<               0   0              0
 2     0                0   0              0
 3     0                0   0              0
 4     0                0   0              0
 5     0                0   0              0
```

```
--PE 1 SEQUENCE--          --PGDN/UP FOR MORE--
              -PHASES-            -PE-OUT-
INT  INSTR  12345678  TIME  HOI 12345678  FLM
 6     0<               0   0              0
 7     0                0   0              0
 8     0                0   0              0
 9     0                0   0              0
 10    0                0   0              0
```

It requires two screens to view all 10 available intervals in Preemption Sequence #1. The other preemption sequences, 2 through 8, also use two screens each.

INT: There are 10 available preemption intervals.

INSTR: Allows the user to program the appropriate instruction, **0**, **1**-**9** or **90**-**101**.

PHASES: Activate the phases allowed during the interval by placing an **X** under each phase. Push the phase number on the keyboard to place (or remove) an **X**.

TIME: The duration of the interval. If HOI is programmed this is the minimum time duration of the interval. Range is 0-255 seconds.

HOI: Hold-On-Input. If activated by a **1**, the preempt sequence will remain in that interval until the PE input is inactive.

PE OUT: Specifies the PE Outputs to be active during that interval by placing an **X** under each output. Push the PE Output number on the keyboard to place (or remove) an **X**.

FLM: Flash Mode specifies the operation of the PE Outputs. **0** = All Steady On, **1** = All Flash Together, **2** = Odds Flash WIG and Evens Flash WAG and **3** = Outputs 1-4 Steady On and Outputs 5-8 Flash Together.

Page Down (**A**) to program **LIGHT RAIL TRAIN** .

```
--LIGHT RAIL TRAIN–
                        1     2     3     4
ASSOCIATED PE           6     6     0     0
TIME TO GREEN          19    21     0     0
H-BAR FSH TIM         5.0   6.0     0     0
V-BAR FSH TIM         4.0   4.0     0     0
MIN DURATION         16.0  10.0     0     0
--PGDN(A)/UP(B) OR MORE--
```

There are several programming elements needed to serve LRT movements. Besides the data required on this programming screen, an associated prempt sequence(s) must be programmed and I/O must be appropriately remapped.

ASSOCIATED PE – Assign a preempt function 1-8 to the Light Rail Train function. A valid Light Rail Train call is viewed by the controller as a valid preempt call and the preempt sequence is then initiated.

TIME TO GREEN – The time from the receipt of the LRT call to the beginning of the solid vertical bar “GO” (0 – 255 seconds).

H-BAR FSH TIM – Horizontal Bar Flash Time. The time that warns the LRT driver to “Get Ready to Go” (0 – 25.5 seconds).

V-BAR FSH TIM – Vertical Bar Flash Time. The clearance interval for the LRT movement (0 – 25.5 seconds).

MIN DURATION – The minimum amount of time that the solid vertical bar will be displayed (0 – 255 seconds).

From the **PRE-EMPTION PROGRAMMING MENU**
Select 9. **SPECIAL INTERVALS**

```
      --PRE-EMPTION PROGRAMMING MENU--

0.HI PE SETUP                 9.SPEC INTERVALS 1-9

1-8.PROG SEQ'S 1-8
```

```
   --SPECIAL INTERVALS PHASES/OVERLAPS--
INT    1   2   3   4   5   6   7   8   A   B   C   D
   1   5<  5   5   5   5   2   5   5   6   5   5   5
   2   0   0   0   0   0   0   0   0   0   0   0   0
   3   0   0   0   0   0   0   0   0   0   0   0   0
   4   0   0   0   0   0   0   0   0   0   0   0   0
   5   0   0   0   0   0   0   0   0   0   0   0   0
 --PGDN/UP FOR MORE--SEE HELP FOR CODES--
```

```
   --SPECIAL INTERVALS PHASES/OVERLAPS--
INT    1   2   3   4   5   6   7   8   A   B   C   D
   6   0<  0   0   0   0   0   0   0   0   0   0   0
   7   0   0   0   0   0   0   0   0   0   0   0   0
   8   0   0   0   0   0   0   0   0   0   0   0   0
   9   0   0   0   0   0   0   0   0   0   0   0   0

 --PGDN/UP FOR MORE--SEE HELP FOR CODES--
```

There are nine Special Intervals available in the Voyage software. During each Special Interval, a desired output state can be assigned to each phase (1-8) and overlap (A-D). The possible output states are:

0	Dark (No Output)
1	Green and Don't Walk
2	Green and Walk
3	Green and Flashing Don't Walk
4	Yellow
5	Red
6	Flashing Yellow WIG
7	Flashing Yellow WAG
8	Flashing Red WIG
9	Flashing Red WAG
10	Walk Only
11	Flashing Don't Walk Only

The screens above are programmed so that Special Interval #1 will display Red for all phases/overlaps except phase 6, which will display Green/Walk and overlap A, which will display Flashing Yellow WIG.

Preempt Examples

Preemption Example 1:

Normal Emergency Vehicle Preemption

This example shows a possible setup for four emergency vehicle preempts at an eight phase intersection. To accommodate preempt indicator lights, output re-assignment can be used to connect the preempt outputs to unused ped yellows.

PE Output	Ped Yellow Phase
1	2
2	4
3	6
4	8

For all four preempt sequences the preempt transition time Min Green is set at 6.0 and the Walk is set at 4.0. For all four preempt sequences priority is set at 6 (instead of 7 or 8) because priority settings 1-6 will not override flashing operation.

PE 1 Sequence

Interval	Instruction	Phases	Time	HOI	Outputs	Flash Mode
1	0	25	10	1	1	0
2	99	26	0	0		

PE 2 Sequence

Interval	Instruction	Phases	Time	HOI	Outputs	Flash Mode
1	0	16	10	1	2	0
2	99	26	0	0		

PE 3 Sequence

Interval	Instruction	Phases	Time	HOI	Outputs	Flash Mode
1	0	47	10	1	3	0
2	99	48	0	0		

PE 4 Sequence

Interval	Instruction	Phases	Time	HOI	Outputs	Flash Mode
1	0	38	10	1	4	0
2	99	48	0	0		

Preemption Example 2:
Normal Railroad Preempt with Track Clearance

Figure 27:

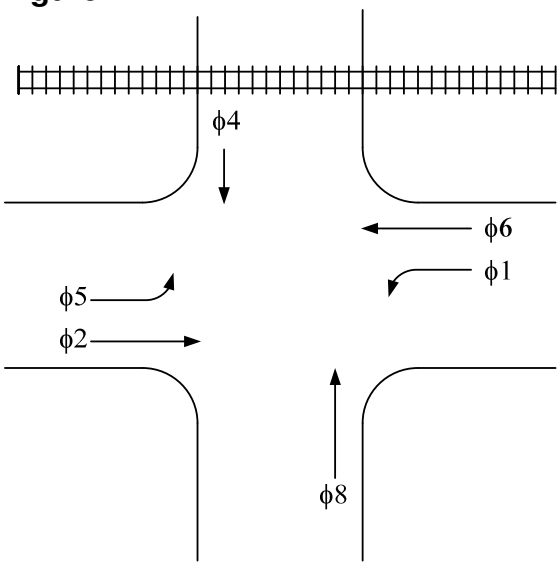

This shows setup for railroad preempt at a six phase intersection. The railroad crosses the phase 4 approach, therefore track clearance is provided for phase 4. For phase 6 there is a part-time restriction sign "NO RIGHT TURN". This sign is controlled by Preempt Output 1.
Output 1 is assigned to phase 2 Ped Yellow output.

PE 5 Sequence is intended for use with a single railroad preempt. Priority is set at 8, the highest value.

It is assumed that the train is detected 53 seconds before it arrives at the crossing. Therefore, if phases 2 and 6 are in Walk there will be sufficient time to go to phase 4 track clearance and still have the gates down for 20 seconds before the train arrives.

Transition Times

Min Green	3
Walk	1
Ped Clearance	8

PE 5 Sequence

Interval	Instruction	Phases	Time	HOI	Outputs	Flash Mode
1	0	4	12	0	1	0
2	0	126	10	1	1	0
3	0	48	14	0		
4	99	5				

Interval 1 provides 12 seconds of track clearance for the phase 4 approach. Interval 2 allows phases 1, 2 and 6 to be served on a demand basis for at least 10 seconds, as long as the preempt input is active. Interval 3 is used to clear out queues that may have formed on phases 4 and 8 during preemption. Interval 4 exits preemption and places a vehicle call on phase 5.

Preemption Example 3:
Railroad Preempt with Coordination & Internal Logic

This is a Railroad preempt with internal logic to drive alternate coordination plans during the preemption. A diagram of this intersection and the associated interval logic program are found in Internal Logic Example #3. The railroad has long preempts for switching. The current coord plan is determined, via internal logic and a similar coord plan with the same cycle length is called for during coordinated limited service. The limited service coord plans (4-6) call Service Plan 1 and Max Plan 1 via circuit mapping. These plans allow phase 3 to have longer service.

The intersection has eight phases with an adjacent railroad. The railroad crosses phase 4 & 7 approach. Therefore track clearance is provided for phases 4 & 7. For phase 6 there is a part-time restriction sign "NO RIGHT TURN". This sign is controlled by Preempt Output 1. Output 1 is assigned to the phase 2 ped yellow output.

PE 5 Sequence is intended for use with a single railroad preempt. Priority is set at 8, the highest value. When exiting the preempt the intersection goes Free for 3 minutes and calls for Max Plan 2 to provide additional green time to clear queues on phases 4, 7 and 8.

Transition Times

Min Green	3.0
Walk	1.0
Ped Clearance	6.0

PE 5 Sequence

Interval	Instruction	Phases	Time	HOI	Outputs	Flash Mode
1	**0**	**47**	**14**	**0**	**1**	**0**
2	**96**	**1236**	**10**	**1**	**1**	**0**
3	**99**	**47**	**0**	**0**		

Max Time Mode - Max Plan Operation

Phase	1	2	3	4	5	6	7	8
Mode	1	1	1	1	1	1	1	1

Max Values for Normal Operation and Max Plans 1 & 2

Phase	1	2	3	4	5	6	7	8
Max 1	15	60	12	30	15	60	12	30
Max Plan 1	15	60	40	60	20	60	20	60
Max Plan 2	8	30	10	60	20	30	20	60

Max 1 for Normal Operation
Max Plan 1 for Limited Service (Interval 2)
Max Plan 2 for Exiting Preempt (duration of 3 minutes comes from the Exit to Free timer)

Values changed by Service Plan 1 for Limited Service (Interval 2)

Phase	3	4	8
Min Green	18	3	3

Preemption Example 4:
Light Rail/Heavy Rail Preemption

Figure 28:

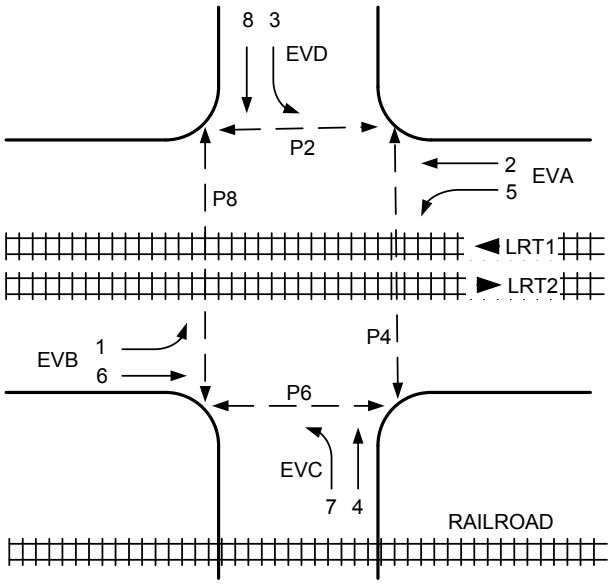

PE INPUT	MOVEMENT
1	EVA
2	EVB
3	EVC
4	EVD
5	RR
6	LRT1 & LRT2

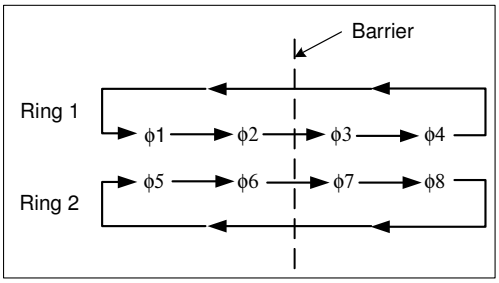

This is the setup for an eight phase intersection with 7 preempt inputs. There are 4 EV preempts and each has an output to an indicator light. The highest priority is assigned to a railroad track which crosses the phase 4 & 7 leg of the intersection. In the median of the main street there is a two directional light rail movement (LRT1 & LRT2). The intersection is coordinated during the day with plans (1-3) and is Free at night.

Programming for Four EV (Emergency Vehicle) Movements

Via output assignment, connect preempt outputs (1-4) to phase OLC and OLD. These will control EV preempt indicator lights.

Preempt Indicators	Normal Output
1	OLC Red
2	OLC Yellow
3	OLC Green
4	OLD Red

PE1 to PE 4 Transition Times

Min Green	5.0
Walk	3.0
Ped Clearance	12.0

All four EV preempts must clear either or both phase 4 and 8. Phase 4 and 8 Ped Clearance is 17 which causes excessive delay before displaying the EV phases, so it will be reduced to 12. For all four EV preempts have priority set at 6.

Preemption Example 4: Continued

PE 1 Sequence – EVA

Interval	Instruction	Phases	Time	HOI	Outputs	Flash Mode
1	0	25	10	1	1	0
2	99	26	0	0		

PE 2 Sequence – EVB

Interval	Instruction	Phases	Time	HOI	Outputs	Flash Mode
1	0	16	10	1	2	0
2	99	26	0	0		

PE 3 Sequence – EVC

Interval	Instruction	Phases	Time	HOI	Outputs	Flash Mode
1	0	47	10	1	3	0
2	99	48	0	0		

PE 4 Sequence – EVD

Interval	Instruction	Phases	Time	HOI	Outputs	Flash Mode
1	0	38	10	1	4	0
2	99	48	0	0		

Programming for RR movement

The railroad preemption timing is dependent on having the crossing gates in place for 20 seconds prior to the train arriving. An additional 6 seconds is needed for the gates to go down. Prior to the gates going down a track clearance green is needed. Prior to moving to track clearance green any conflicting pedestrian movements must be cleared. This is summarized in the following timeline.

Total Time	Event Time	Event
T_{71}		Train detect
T_{71}	4	Delay on, Ped Omit on, all Walks driven to 4 seconds
T_{67}	17	2 & 6 ped clearance or 4 & 8 ped clearance begins
T_{50}	5	Vehicle clearance begins
T_{45}	14	Phase 4 & 7 track clearance green begins
T_{31}	5	Phase 4 & 7 vehicle clearance begins
T_{26}	6	Gates begin lowering
T_{20}	20	Gate in place
T_0		Safety buffer before train arrives

Preemption Example 4: Continued

PE 5 Sequence number 5 is used with a single railroad preempt. Priority is set at 8, the highest value. When exiting preempt the intersection goes Free for 3 minutes and then calls for Max Plan 1. For the phase 6 approach there is a part-time restriction sign “NO RIGHT TURN”. This sign is controlled by preempt output 5, which is assigned to the previous yellow.

Transition Times

Min Green	5.0
Walk	4.0
Ped Clearance	12.0

Delay

Delay	12
Ped Omit	12
Vehicle Omit	8

PE 5 Sequence – Railroad

Interval	Instruction	Phases	Time	HOI	Outputs	Flash Mode
1	0	47	14	0	5	
2	0	1236	10	1	5	0
3	99	478	0	0		

Max Time Mode - Max Plan Operation

Phase	1	2	3	4	5	6	7	8
Mode	1	1	1	1	1	1	1	1

Max Values for Normal Operation and Max Plans 1 & 2

Phase	1	2	3	4	5	6	7	8
Max 1	15	60	15	40	15	60	15	40
Max Plan 1	8	30	10	60	20	30	25	60

Max 1 for Normal Operation
Max Plan 1 for Exiting Preempt (duration of 3 minutes comes from the Exit to Free timer)

Programming for 2 LRT Movements

It is assumed in this example that the LRT inputs are controlled by an external VETAG unit, typical of operation in Portland, Oregon and Tacoma, Washington. The displays for the 2 LRT movements operate independently. Input and output reassignment is needed for the functions shown in the table below. Priority is set at 6, equal to EV, but less than the heavy rail priority.

.

Preemption Example 4: Continued

Inputs for LRT	**Outputs for LRT**
Ped Inhibit LRT 199	LRT Horizontal Bar 157-160
Check-in w/ TTG 200-203	LRT Vertical Bar 167-170
Check-in w/o TTG 204-207	PE Output 6 for part-time restriction signs
Check-out 208-211	

PE 6 Sequence - LRTs

Interval	Instruction	Phases	Time	HOI	Outputs	Flash Mode
1	201	26	20	0	6	1
2	202		5	0		0

LRT Programming

LRT Function	1	2
Assoc. PE	6	6
TTG	15	18
H-Bar Time	4.8	5.3
V-Bar Time	4.5	4.5
Min Duration	10	10

Transition Times

Min Green	5.0
Walk	4.0
Ped Clearance	12.0

For all four approaches there are part-time restriction LRT warning signs. These signs are controlled by preempt output 6 which flashes. When PE is not active for LRT1 and LRT2, the LRT signals rest in solid horizontal bar.

Communication and Reports

Sharing data between computers and traffic controllers is vital to effectively manage road networks. Traffic engineers and signal maintenance professionals rely on easy, robust communications to modify the timing of intersections, collect event and count logs and remotely observe operations. The Voyage software supports several time-tested, reliable methods of communication:

Direct Connection between a laptop and the 2070

Remote Connection between a PC and the 2070 via phone modems

Remote Connection between a PC and the 2070 via Ethernet to fiber optics to Ethernet w/ Ethernet to fiber modems at each site

Master 2070 to Local 2070 via FSK or RS232 or radio

Communication Ports

The Voyage software is designed to take advantage of the communication ports available in the 2070 controller. The 2070 offers one standard serial port and several additional ports on optional communications modules. Contact the controller supplier for more details about communication hardware. The following chart identifies the ports used by the Voyage software. *Note:* Port 4 comes out in two locations C50S on the front of the controller and A1 lower on the back, **only one of these connection points, C50S or A1 lower, can be used at a time.**

Figure 29:

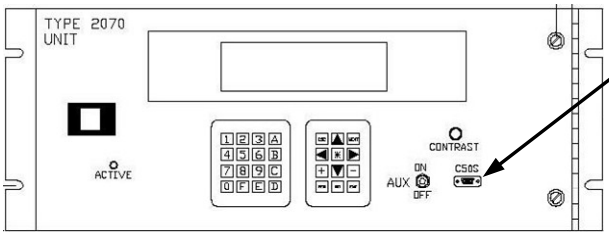

2070 Front View

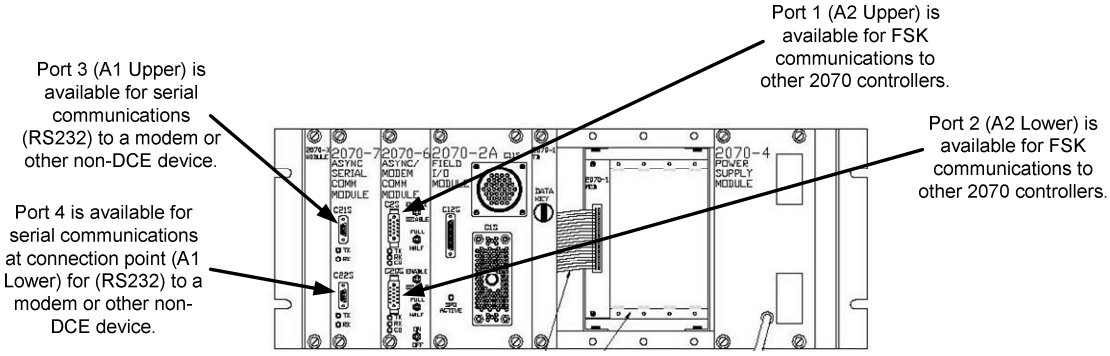

2070 Rear View

Communication Methods

Direct Connection of a Laptop to a 2070

Figure 30:

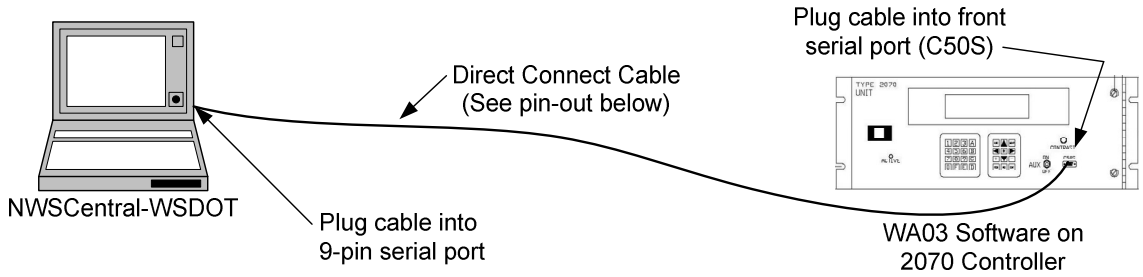

Figure 31: Direct Connect Cable Pin-Out

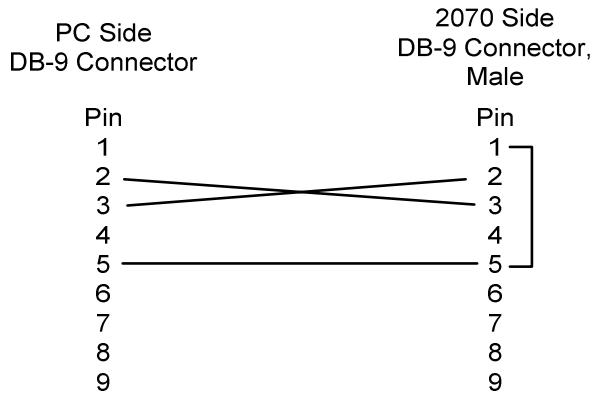

This method of communication is used to direct connect a laptop to a 2070 via port 4 at C50S. *Note: Port 4 is bifurcated to C50S on the front of the controller, and A1 Lower on the back of the controller.* Communications are allowed at C50S in the front of the controller for convenience, so that the user can see the display screen and the load bay.

The 2070 could be sitting on a bench in the shop, in an isolated controller cabinet with no remote communications, or in a controller cabinet that has remote communications. As noted below when the direct connect cable is plugged into C50S any communications with A1 Lower will be disabled. Thus if the controller has remote

communications via A1 Lower the communication via A1 Lower will be disabled as long as the laptop direct connect cable is plugged into C50S.

To enable direct connect communication:

- The physical connections must be made properly.
- In the NWSCentral software under Setup PC Communications, set the desired baud rate on the proper PC port. The System ID number and the Local ID number used in NWSCentral must match the ID numbers in the particular local controller.
- In the 2070 controller, set the desired baud rate on port 4. Set the Central Port to port 4.

Note: A direct connect cable placed on C50S disables A1 Lower.

Central PC to Local Controller Connection via Telephone MODEM

Figure 32:

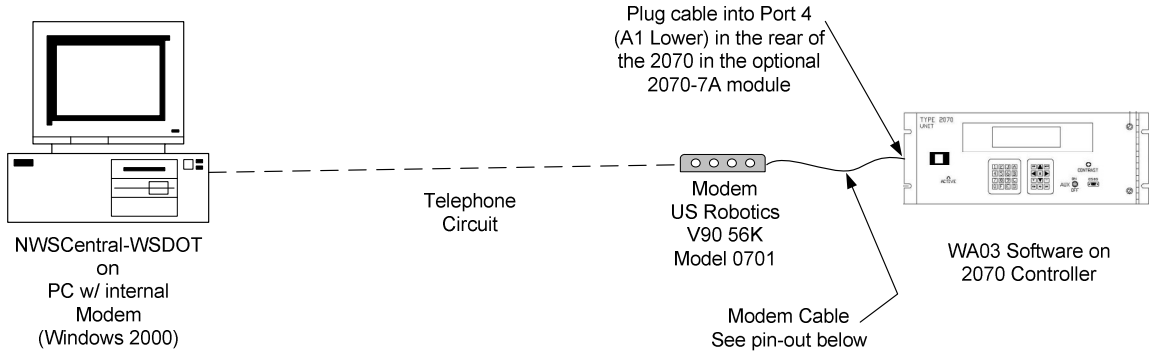

Figure 33: Modem to 2070 Cable Pin-Out

Modem Side DB-25 Connector Male Pin	2070 Side DB-9 Connector Male Pin
8	1
3	2
2	3
20	4
7	5
6	6
4	7
5	8
22	9

US Robotics Switch Settings

1	Down	DTR Override
2	Up	Verbal Codes
3	Down	Code Display
4	Down	No Echo
5	Up	Auto Answer
6	Up	DCD Normal
7	Down	Load Defaults
8	Down	Smart Mode

Figure 34:

Physical Connections, US Robotics Modem (Model 0701)

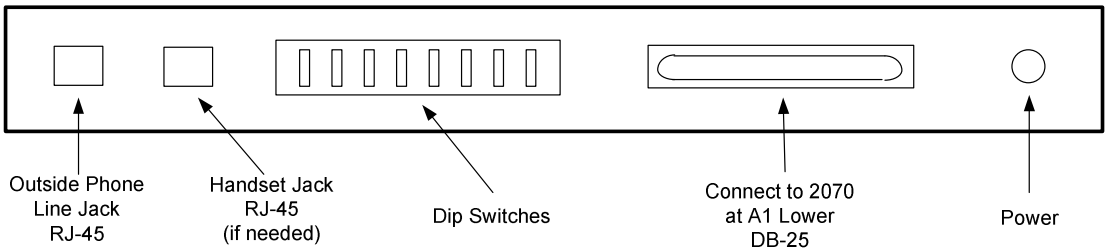

To enable central PC to local controller communication:

- Physical connections must be made properly.
- In NWSCentral, under setup PC communications, set the desired baud rate on the proper PC port and program the phone number for the controller cabinet. The System ID number and the Local ID number used in NWSCentral must match the ID numbers in the particular local controller.
- In the 2070 controller, program the desired baud rate, select the proper 2070 port, program the phone number for the central office and program the modem setup string. The System ID number and the Local ID number used in NWSCentral must match the ID numbers in the particular local controller.

Central PC to Local Controller Connection w/ Ethernet Port

Figure 35:

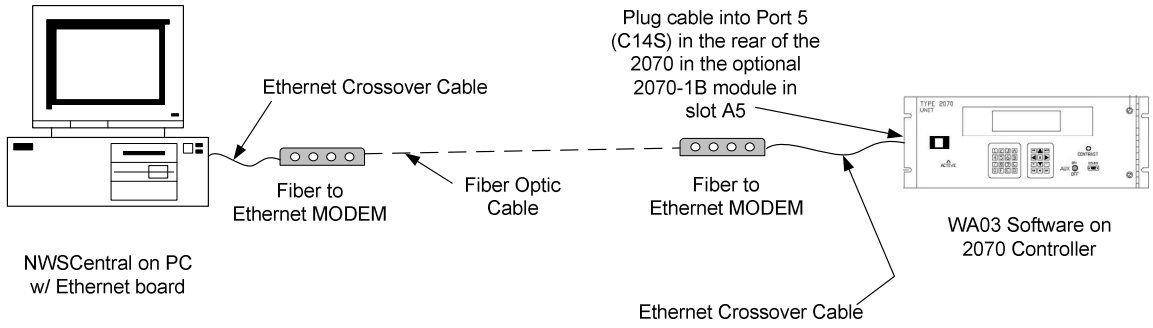

To enable central PC to local controller communication:

Physical connections must be made properly.

In NWSCentral, under setup PC communications, select port 5 – TCP. The System ID number and the Local ID number used in NWSCentral must match the ID numbers in the particular local controller. In the NWSCentral Setup Local, set the 1st two numbers in the IP address as directed by the IT manager [We suggest using 10.1.sys.loc, as a default. Note that if the controller and the PC are on the same network the first two numbers in the IP addresses must match, i.e. use PC IP address = 10.1.1.121 and Subnet = 255.255.0.0. Also, if the controller and the PC are on separate networks it may also be necessary to set the gateway IP address in the controller. Consult with the IT manager.]

In the 2070 controller, set the System ID number and the Local ID number to match the numbers used in NWSCentral. Set the Network ID (Bytes 1 & 2) to match the 1st two numbers in the IP address in the PC.

If the intersection is a master (System Mode – 2) set the Central Port to port 5 to enable Ethernet communications on C14S.

Ethernet communications could also be used for bench testing a controller or group of controllers. The Ethernet cable would be very short, about 3' – 15'. There would be no need for the two Fiber to Ethernet Modems.

Master Controller to Local Controllers FSK Connection

Figure 36:

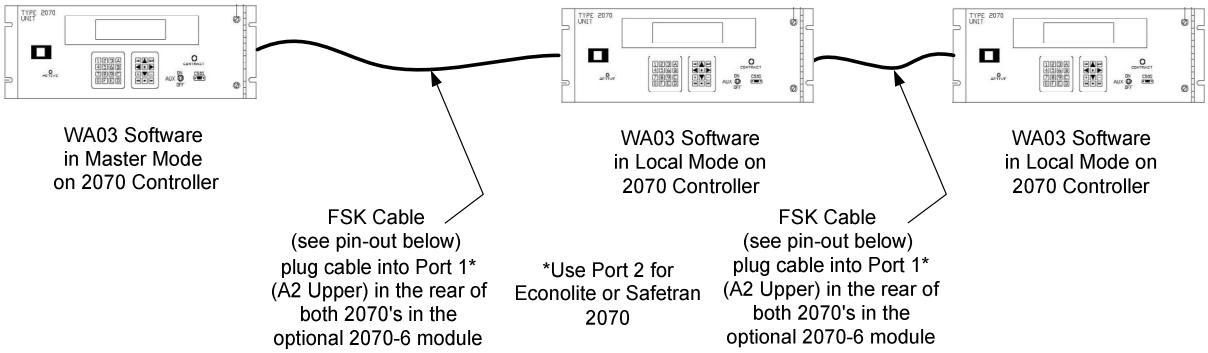

Figure 37: FSK Cable Pin-Out

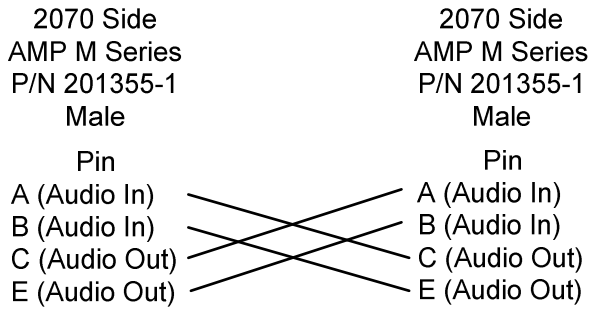

To enable master controller to local controller communication:

- Physical connections must be made properly.
- In NWSCentral under Setup PC Communications, set the desired baud rate on the proper PC port. The System ID number and the Local ID number used in NWSCentral must match the ID numbers in the particular local controller.
- Most 2070-6 modules have the line termination impedance set for HI-Z, but at least one local controller must be set to 600Ω. Normally, it is the farthest local from the master controller however, if the master is not at the end of the system, more than one local may need to be set for 600Ω.

- In the master 2070 controller, program the controller to operate in System Mode = 1 or 2, set the desired baud rate (1200 baud if 2070-6A module is used, 9600 baud if 2070-6B is used) and select the proper 2070 system port; Port 1 is recommended however if the 2070 is a Safetran or Econolite unit use Port 2. If Mode=2 (polling), it is necessary to enable communications with all active system local controllers. See the chapter called “System” for further details.

- In the local 2070 controllers, program the controller to operate in the System Mode = 0, set the desired baud rate (1200 baud if 2070-6A module is used, 9600 baud if 2070-6B is used) and select the proper 2070 system port ; Port 1 is recommended however if the 2070 is a Safetran or Econolite unit use Port 2. If hooking PC to master controller in System Mode = 2 that will communicate with local controllers, then the master controller must have its central port programmed (Port 4 is recommended).

Reports

There are several useful logs, and associated reports, available in Voyage and NWSCentral. There is a Volume Log, an MOE Log (Measure of Effectiveness), and 4 separate Function (Schedule) Logs. These logs can be recorded continuously in the Voyage software and retrieved by the NWSCentral software on an as-requested or a scheduled basis. There are also two logs and report types that are associated with system operation. They are discussed in the system section. The Transit Priority operation has a log that is discussed in the Run Mode section.

Volume Logs – The controller has 32 local detectors; all of these detectors can be used to generate a log of the number of actuations on the detector. If the detector has the following characteristics these actuation will be a close approximation of the volume over the detector:

1. The detector is short, about 6' long.
2. The detector only covers one lane.
3. The detector is not in an area of heavy queuing on Red.

Volume logging is enabled by two actions.

1. Setting a logging period in minutes of (1-60). The period is a factor of 60.
2. Turning on TOD circuit 113.

Note that volume logging will operate for a detector even if the input from that detector is being manipulated by other features of the software such as; delay, stretch, inhibit, etc. The Volume Logs can be viewed/stored/printed in NWSCentral. A sample of a volume log is shown below in Figure 38.

Figure 38: Example of a Volume Log (Printed from NWSCentral)

	WSDOT								
	Volume Logs For – 4 – Main Street 1 – SW 1st Avenue								
	Wednesday, January 24, 2003 11:18								
	Number of Records	4				Sample Period 15			
	Date	Wednesday, January 22, 2003				Time	10:15 – 11:15		
	Detector	1	2	3	4	5	6	7	8
	Volume	119	0	120	0	130	0	120	0
	Detector	9	10	11	12	13	14	15	16
	Volume	266	0	0	0	0	184	0	0
	Detector	17	18	19	20	21	22	23	24
	Volume	0	0	266	0	0	0	0	184
	Detector	25	26	27	28	29	30	31	32
	Volume	0	0	0	0	0	0	0	0

In addition, volume data is stored as a comma-delimited text file, enabling the user to manipulate the data in a spreadsheet program, like Microsoft Excel™. The text file is saved in the Local Data folder in NWSCentral using a "*.VL" extension.

MOE Logs – While the controller is running six parameters called Measure of Effectiveness (MOE) can be recorded in an MOE log. These can be useful in evaluating the real world operation of a controller with a particular set of controller timing values. The six MOE's are listed below.

1. Phase Service – How often did the phase go to Green during the sample period?
2. Ped Service - How often did the phase go to Walk during the sample period?
3. Average Green – What was the average Green per cycle during the sample period?
4. Max Outs – How often did the phase Max Out during the sample period?
5. Force-Offs – How often was the phase Forced-Off during the sample period?
6. Gap Outs – How often did the phase Gap Out during the sample period?

MOE logging is enabled by two actions.

1. Setting a logging period in minutes of (1-60). The period is a factor of 60.
2. Turning on TOD circuit 114.

The MOE Logs can also be viewed/stored/printed in NWSCentral. A sample MOE Log is shown below in Figure 39. In addition, MOE data is stored as a comma-delimited text file, enabling the user to manipulate the data in a spreadsheet program, like Microsoft Excel™. The text file is saved in the Local Data folder in NWSCentral using a "*.ML" extension.

Figure 39: Example of an MOE Log (Printed from NWSCentral)

	WSDOT									
	MOE Logs For – 4 – Main Street 1 – SW 1st Avenue									
	Wednesday, January 26, 2003 11:25									
1	Record Number	35				Sample Period			60	
2	Date					Mid-Period Time			09:30	
3	Phase	1	2	3	4	5	6	7	8	
4	Phase Service	51	52	0	51	0	52	0	51	
5	Ped Service	0	52	0	11	0	52	0	6	
6	Average Green	5	28	0	13	0	46	0	13	
7	Max Outs	0	37	0	2	0	33	0	4	
8	Force-offs	0	0	0	0	0	0	0	0	
9	Gap Outs	0	15	0	49	0	19	0	47	

Function Logs – These logs are used to log important events which take place during the use of the Voyage software. There are 12 types of events. Each of these types of events can be directed to any of the four Function Log schedules (A, B, C & R). Any or all of the four Function Logs schedules can be retrieved/viewed/stored/printed by the NWSCentral software. The logs will appear like the one shown below in Figure 40. A comprehensive listing of the possible messages follows Figure 40.

Figure 40: Example of a Function Log
(Printed from NWSCentral)

	WSDOT		
	Schedule B Logs For – 4 – Main Street 1 – SW 1st Avenue		
	Wednesday, January 23, 2003 11:14		
	Date	Time	Message
	Tuesday, January 21, 2003	14:51:50	Data Sent to Controller
1	Tuesday, January 21, 2003	14:52:12	Data Changed at Keyboard
2	Tuesday, January 21, 2003	14:52:20	System On
3	Tuesday, January 21, 2003	16:34:02	Data Changed at Keyboard
4	Tuesday, January 21, 2003	16:40:16	System Off
5	Tuesday, January 21, 2003	16:40:21	Enter Preempt 3
6	Tuesday, January 21, 2003	16:40:44	Exit Preempt 3
7	Tuesday, January 21, 2003	16:44:54	Data Changed at Keyboard
8	Wednesday, January 22, 2003	07:24:30	System On
9	Wednesday, January 22, 2003	10:14:38	Data Sent to Controller
10	Wednesday, January 22, 2003	10:40:18	Data Changed at Keyboard
11	Wednesday, January 22, 2003	10:59:41	System Off
12	Wednesday, January 22, 2003	10:59:53	Enter Preempt 1
13	Wednesday, January 22, 2003	11:00:08	Exit Preempt 1
14	Wednesday, January 22, 2003	11:00:09	System On
15	Wednesday, January 22, 2003	11:03:28	Data Changed at Keyboard
16	Wednesday, January 22, 2003	11:09:41	System Off
17	Wednesday, January 22, 2003	11:10:32	Enter Preempt 5
18	Wednesday, January 22, 2003	11:11:54	Exit Preempt 5

If changes are being made to the schedule programming, it is advisable to retrieve or clear logs for those logs that have had their programming altered. Likewise, before putting a new controller on the street the logs should be cleared to eliminate confusion from old log entries.

Possible Report Function Log Messages

The following messages may be logged if enabled in the Voyage software.

Alarm x On
Alarm x Off
Power Up
Power Down
Power Interrupt
Controller Area Checksum Failure
Coordination Area Checksum Failure
Time Clock Area Checksum Failure
Preemption Area Checksum Failure
Misc. Area Checksum Failure
Controller Area Checksum Corrected
Coordination Area Checksum Corrected
Time Clock Area Checksum Corrected
Preemption Area Checksum Corrected
Misc. Area Checksum Corrected
Flash, Manual Override
Flash, Test A
Flash, Flash Input
Flash, TOD Circuit
Preempt Input Failure
Power Up Preempt Input Active
Exit Flash, Manual Override
Exit Flash, Test A
Exit Flash, Flash Input
Exit Flash, TOD Circuit
Exit Preempt Input Failure
Power Up Preempt Input Inactive
Manual Control Enable (MCE) Active
Manual Control Enable (MCE) Inactive
SysControl Checksum Area Failure
Video Fail xx Active
Enter Preempt x
Exit Preempt x
Enter Controller Cycle Failure
Exit Controller Cycle Failure
Cycle Fault
Coordination Fault
Coord Plan XX Active
Coordination Failure
Keyboard Security Code Entered
Security Code Timed Out
System On
System Off
Detector xx No Activity
Detector xx Below Threshold
Detector xx Above Threshold
Detector xx Constant Call
Detector xx Return To Normal
Enter Power Up Flash Input Active
Exit Power Up Flash Input Active
Cabinet Door Open
Cabinet Door Closed
Entered Monitor Flash / Flash Sense
Exited Monitor Flash / Flash Sense
Data Sent to Controller
Data Changed at keyboard
Enter Soft Flash Active (by Master)
Exit Soft Flash (by Master)
Communication Checksum Fail
Communication Checksum Fixed
SysControl Checksum Area Fixed
Video Fail xx Inactive

Communication and Reports Programming Screens

To make changes to the communication and reporting programming, bring up the **MAIN MENU** by pressing **NEXT**

```
--MAIN MENU--

1.RUN MODE        3.UTILITIES

2.PROGRAM MODE

-- AUX Switch ON = Stop Time --
--USE F KEY FOR HELP--
```

Select 2. for **PROGRAM MODE**

```
--PROGRAM MODE MENU--

1.SECURITY CODE  5.PREEMPTION     8.I/O
2.CONTROLLER     6.COMM/REPORT      CONFIG
3.COORDINATION   7. TRANSIT       9.INTERNAL
4.TIME CLOCK        PRIORITY        LOGIC
                                  0.SYSTEM
```

Note: Selection “0.System” is only displayed if the controller has been programmed to operate in system mode 2, as described on the next page.

Select 6. for **COMM/REPORT**

```
--COMM SETUP/REPORTS PROGRAMMING MENU--

1.COMM SETUP          3.MOE/VOL LOG PERIOD

2.PHONE NUMBERS/      4.FUNCTION SCHEDULING
  CENTRAL PORT/
  MODEM STRING
```

Select 1. for **COMMUNICATIONS SETUP**

```
-COMMUNICATIONS SETUP-Not settable by PC
(0/1-2=LOCAL/MASTER)(PORT 0-4: 0=NONE)
SYSTEM MODE:    0<   SYSTEM PORT:     1
     SYSTEM ID:  19        LOCAL ID:    2
BAUD RATES: 0-1200,1=2400,2=9600,3=19.2K
(A2UP) PORT 1:        0  (A2LO) PORT 2:     0
(A1UP) PORT 3:        0  (A1LO) PORT 4:     2
--PGDN/UP FOR MORE--        (C50S)(2/3 ONLY)
```

SYSTEM MODE The following system mode options are available:

- Select “0” for a normal local controller.
- Select “1” if the local controller will also act a “broadcasting” master controller. Use this mode when running a system with a local controller configured as a master and the other controllers configured as locals (system mode=0). Only one of the locals can be configured as a master. The master controller sends coordination plan and flash command information to the locals once per minute. The master controller also sends a set date and time command once per minute to the locals. In this mode of operation it is also possible to upload and download to all locals through the master. The most likely setup has all of the local controller’s coordination plan and flash source programming set for “34” (communications) while the master controller is set for “33” (time clock). In this mode of operation it is also possible to utilize Local Relays (See Internal Logic).
- Select “2” if the local controller will also act a “polling” master controller. This mode accomplishes everything described above for mode “1”, but also allows the master controller to poll all of the locals for their current status and also allows local controllers to initiate automatic log reporting through the master. The status of the local controllers can be displayed on the master controller and/or in the NWSCentral local status display window. Set up the master and locals as described above for mode ”1”. In this mode of operation it is NOT possible to utilize Local Relays (See Internal Logic).

SYSTEM PORT If the local controller is operating in master mode (System Mode =”1” or “2”) a System Port must be selected. **This port will be used to communicate with other interconnected local controllers.** Certain ports are recommended for certain types of communications. The default and recommended port is 1. The communications module for slot A2 would be the 2070-6A for 1200 baud or 2070-6B for 9600 in the FSK usage (C2S connector). The 9600 baud module has distance limitations. If a different baud rate is required, an external FSK modem can be used with the 2070-7A module in the A2 slot (FSK modem to C21S). Radio (narrow band or spread spectrum) and external fiber modems can be used in the same way, but the hookup is different between master and local and a switch setting on the board (refer to the manufacturer’s manual) needs to be set if the local is also the master. When selecting the HI-Z/600Ω jumper on the 2070-6 module, remember that most of the locals

including the master should be set to HI-Z. The farthest local from the master should be set to 600Ω. If the master is in the middle of the system, it is probable that 2 locals from the master would be set to 600Ω.

SYSTEM ID — A System ID number is needed if the controller is to communicate with other controllers in a network and with a central PC. A value of “0” indicates that there is no system. Values of “1” to “250” are valid System ID numbers.

LOCAL ID — A Local ID number is needed for communications with other controllers in a network and with a central PC. The Local ID number can be set to “0”, but will be unable to communicate. Normal values range from “1” to “50”, i.e. a master controller can support up to 49 other local controllers.

BAUD RATES — Select a Baud Rate for each port which is intended to be used. The Baud Rate should be appropriate for the type of communications taking place. For example, direct communication between a PC and a controller can use a 19,200 Baud Rate, but FSK communications are usually limited to 1200 baud, depending on the modem. The available settings are “0” = 1200 baud, “1” = 2400 baud, “2” = 9600 baud and “3” = 19,200 baud.

Page down (**A**) to program **NETWORK IP ADDRESS**

```
  --NETWORK ID ADDRESS-Not Settable by PC--
IP ADDRESS DOT FORMAT FOR PORT 5 (C14S):
NETWRK ID1.NETWRK ID2.SYSTEM ID.LOCAL ID
IP ADDRESS:   10.    1.  19.   2 (Read Only)

NETWORK ID BYTE 1:     10<(0-255,
NETWORK ID BYTE 2:      1   0=DISABLED)
          --PGDN(A)/UP(B) FOR MORE--
```

NETWORK ID — Consult with the IT manager to determine the correct network ID address to use. At these locations set byte 1 and byte 2 of the network address used by the computer running NWSCentral.

Page down (**A**) to program **GATEWAY IP ADDRESS**

```
  --GATEWAY ID ADDRESS-Not Settable by PC--
   ADDRESS DOT FORMAT FOR PORT 5 (C14S):

    GATEWAY: BYTE 1= 0= Disabled
    ADDRESS:   0.    0.    0.   0

      --Press HELP(F) to see Routing Table--
          --PGDN(A)/UP(B) FOR MORE--
```

GATEWAY ID — A gateway may be necessary if the central PC is a separate network from the controller. Consult with the IT manager to determine the correct gateway ID address to use. Press Help (F) to see the IP Routing Table.

Page down (**A**) to program **DIRECT DIAL PHONE NUMBERS**

```
        --DIRECT DIAL PHONE NUMBERS--
         Press 'C' to clear phone number.
PHONE NUMBER 1:     <

PHONE NUMBER 2:

'D' to set special function: , W  T  P
-PGDN TO SET PORT/DIAL-UP MODEM STRING-
```

The Voyage software has the capability of auto-dialing up to two separate phone numbers to transmit logs. The phone numbers are entered using the number keys. Special characters (“,” “W” “T” “P”) are entered by pressing “D”, moving the asterisk to the right of the desired character and again pressing “D”. Each number can support up to 22 characters. The characters are transmitted in order from left to right.

Page down (**A**) to program **CENTRAL PORT/MODEM INIT STRING**

```
     --CENTRAL PORT/MODEM INIT STRING--
     CENTRAL PORT: 0< (PORT 0-4: 0=NONE)
          Press 'C' to clear modem string.
     MODEM STRING: (0-9, special characters)


ABCDEFGHIJKLMNOPQRSTUVWXYZ      #@=,!;%\\&
        Press 'D' to select special characters
```

Central Port - The Voyage controller software has a companion computer based program called NWSCentral. NWSCentral is used for database management and central control & display. The computer running NWSCentral could be 3 feet away from the controller or 3,000 miles away from the controller. By definition there is a communication medium between the controller and the computer.

If a controller is to be connected to a computer running NWSCentral it needs to know which communications port is in use. This port is called the **Central Port.** This address is used to set the Central Port. The range of values are 0 – 5. Using 0 means that no port is assigned to be the Central Port because this controller doesn’t have a connection to the computer running NWSCentral. Ports 1-4 are used for phone modem, fiber modem & RS232 communications between this controller and the computer running NWSCentral. Port 5 (C14S) is used for Ethernet communications between this controller and the computer running NWSCentral.

MODEM Initialization String - If the controller will be connected to a phone modem it is necessary to program this screen. Select a CENTRAL PORT for modem communications, “0” = none, “1”-“4” are port designations.

Enter the MODEM INITIALIZATION STRING. It can be up to 40 characters in length. The number keys will set numeric values, however letters and special characters are accessed by pressing “D”, moving the asterisk to the right of the desired character and again pressing “D”. The recommended modem strings will vary by manufacturer and model.

US Robotics (Model 0701) = at&f&n6&w0y0 (9600 baud)
Telenetics (Model MIU14.4) =ate0q1&d0&k0s0

To use a modem, a 2070-7A module would be installed in slot A1. If the controller is configured as a master and communication with other locals is required, the port that the modem is connected to must be programmed as the central port. If using Port 4 (recommended Port for modem) any PC using C50S will disable slot A1 lower.

Page down (**A**) to program **VOLUME/MOE LOG PERIODS**

```
        --VOLUME/MOE LOG PERIODS--
      (VALUE: PERIOD DIVISIBLE INTO 60)
VOLUME LOG PERIOD:      0<
 ENABLED BY TOD CKT 113 (EVL)

   MOE LOG PERIOD:      0
 ENABLED BY TOD CKT 114 (EML)
         --PGDN(A)/UP(B) FOR MORE--
```

To enable Volume Logging it is necessary to program a valid VOLUME LOG PERIOD (divisible into 60, in minutes) and to turn on the associated time clock circuit (circuit 113). If enabled, all 32 detectors are periodically logged. Time clock circuits 111 and 112 can be activated to automatically report volume logs.

To enable MOE Logging (Measure of Effectiveness) it is necessary to program a valid MOE LOG PERIOD (divisible into 60, in minutes) and to turn on the associated time clock circuit (circuit 114). If enabled, several important statistics are periodically logged: the number of phase services, the number of ped services, the number of max-outs, the number of gap-outs, the number of force-off’s and the average green time (seconds). Time clock circuits 127 and 128 can be activated to automatically report MOE logs.

When selecting a period, remember that when enabling the time circuits, make sure the circuits are activated at the beginning of the normally expected start of the period (the periods are synchronized with real time). For example, if a 15 minute period is used, the Enable Volume Logging time clock circuit should be made to come on at the 0, 15, 30, or 45 minute past the hour. This is so data is not lost. The data to be logged is not accumulated until the enable is active. Each log entry is time-stamped at the CENTER of the logging period.

Volume and MOE logs can both store up to 1500 logs (one log each per logging period). The logs are written over on a wrap-around basis. If 15 minute periods

are used, data can be collected for over 15 days before being overwritten. Each log is time-stamped at the mid-point of the logging period.

Page down (**A**) to program **REPORT FUNCTION SCHEDULING**

```
      --REPORT FUNCTION SCHEDULING--
      (VALUE: 0-4= 0=NONE, 1-4=A,B,C,R)
ALM1  ALM2  ALM3  ALM4  ALM5  N/U  N/U  N/U
  0<    0     0     0     0    0    0    0

PWRC  CKSF  DETF  UCF   SFL   MCE  HPRE N/U
  0     0     0     0     0    0    0    0
        --PGDN(A)/UP(B) FOR MORE--
```

```
      --REPORT FUNCTION SCHEDULING--
      (VALUE: 0-4= 0=NONE, 1-4=A,B,C,R)
CYCF CRDF  DBLD  CRDC  CABO  N/U  MONS  N/U
 0<    0     0     0     0    0    0    0

N/U  N/U  N/U  N/U  N/U  N/U  N/U  N/U
  0    0    0    0    0    0    0    0
        --PGDN(A)/UP(B) FOR MORE--
```

For each function shown on the data screen, a particular log can be selected to record its action. Logs A, B, and C can be automatically called in at certain times based on TOD circuits 105-110. Log R is a “request only log” which is only retrieved upon request. All logs can record up to 100 events before being overwritten with new data. Function descriptions are available on the help screen, press “F”.

Transit Priority

Transit Priority in the Voyage software is a set of eight programmable functions that allow the presence of a transit vehicle to adjust the timing of a controller to cause the vehicle to experience a shorter delay at the intersection. Each transit priority function has 1 or 2 compatible phases associated with it. The timing adjustment, associated with Transit Priority, is less decisive and abrupt than emergency vehicle preemption, as it does not skip phases or disrupt coordination as is typical of preemption. Even so, it has the capability to give considerable advantage to the phase in demand by the transit vehicle. When Transit Priority is in effect, non-transit non-coord phases may be shortened in order to get to the transit phase green interval. Further, the transit phase may be lengthened if the transit demand continues past the normal end of the green interval. Both shortening of non-transit, non-coord phases and lengthening of the transit phase may be used in the same cycle to give advantage to the transit phase.

It is important to understand that there are eight separate Transit Priority functions. Each Transit Priority function is linked to one or two compatible phases that serve transit vehicles. In addition, each of these eight Transit Priority functions has associated inputs and timing parameters.

Phase shortening is accomplished by inserting new, shorter max times (Group Max Times) at the moment that the transit call is received. Shorter max times will cause non-transit phases to terminate early in free operation. In coordinated operation, shorter max times will cause non-transit phases, that are non-coord phases, to terminate early. There are eight distinct sets of Group Max Times available in order to tailor the Transit Priority operation to different traffic conditions that might occur over the course of a day. The controller can be programmed to always use one of the eight Group Max Times, or one of the eight Group Max Times can be chosen by time of day. Alternately, the controller can be set to use the lowest of the Max 1 or Max 2 values. Associated with each of the 8 Group Max Times are smaller values of Walk, which will be used by non-transit, non-coord phases to shorten the time to serve a pedestrian movement.

Phase lengthening is accomplished in one of two ways, depending upon whether in free or coordinated operation. In free, a Bus Extend value, associated with the active transit priority function, is used to lengthen the transit phase. The Bus Extend time is the amount of time that the transit phase can extend beyond its normal max time. The full Bus Extend time will only be used if the transit call remains active (or memory on). In coordination, Alternate Transit Phase Force-offs are used to give new force-off times to ONLY the active transit phases.

When a Transit Priority call is detected, a standard vehicle call is applied to the assigned phase(s) for the duration of its activity. All pedestrians and vehicles are allowed. This operation takes place in free operation or coordination. A priority system may be implemented if more than 1 TP input is to be used

simultaneously. High priority inputs override lower priority inputs. If equal priority inputs are active, the first transit priority input seen is used.

Transit Priority can be activated in the Voyage software in several ways:

1. A pulsing 24V, ground true input (6.25 Hz) on a pin assigned to one of the eight preemption inputs can initiate transit priority. For example, say that a pin is assigned to Preempt Input 1 so that a *continuous* ground would initiate the preemption sequence. A pulsing input on the same pin would *not* initiate preemption, but rather *would* enable Transit Priority 1 programming. For this to occur, the PE ENAB function must be allowed via programming.
2. A continuous 24V, ground true input on a pin that is uniquely assigned to Transit Input (1-8) can initiate Transit Priority. Any pin that is normally assigned to an input function can be reassigned to be a Transit Input (1-8).
3. An Internal Logic program can be used to activate a Transit Input (1-8) whether or not there is an assigned input pin.

Transit Priority can be de-activated in the Voyage software in several ways:

1. The termination of a pulsing 24V, ground true input (6.25 Hz) on a pin assigned to preemption can turn off transit priority, if the memory function is off.
2. A termination of a continuous 24V ground true input on a pin that is uniquely assigned to Transit Priority can turn off Transit Priority, if the memory function is off.
3. A continuous 24V, ground true input on a pin that is uniquely assigned to Clear Transit Call (1-8) can turn off Transit Priority. Any pin that is normally assigned to an input function can be reassigned to be a Clear Transit Call (1-8).
4. An Internal Logic program can be used to activate Clear Transit Call (1-8) whether or not there is an assigned input pin.

Transit Priority is inhibited in the Voyage software under several conditions:

1. Override timer times out, on a per TP input basis.
2. Failed timer times out, on a per TP input basis (255 seconds).
3. Inhibit Transit Priority TOD circuit and/or input (Inhibit Transit Priority, ITP) active, globally covering all TP's (1-8).
4. Clear Transit Call (1-8) input active.
5. Minimum Re-service timer active per TP input; or the Minimum Re-service All timer.
6. Other transit priority active with greater than or equal priority.
7. Controller in flashing operation.
8. Preempt active.
9. MCE or stop time or external start or monitor status active.
10. In coordination and offset seeking (fastway, shortening only).

Effect on Free Operation

The effect of an active Transit Priority input on free operation is straightforward. As an example, consider the receipt of a transit call (an uninhibited call, see discussion above), the current Group Max Times will immediately take effect allowing non-transit phase(s) to be shortened to achieve the transit phase sooner. Also, if the transit call remains active, the Bus Extend time will allow the transit phase(s) to extend beyond its normal max time. Upon termination of the transit call, the controller begins timing the minimum reservice timer (if programmed) and resumes timing phases in the normal sequence and with the normal timing values.

Effect on Coordinated Operation

Transit Priority has a restriction during coordinated operation that prevents early termination of the coordinated phases. After all, the best way to move vehicles (including buses) along a signalized corridor is to have good coordination timing. Therefore, Voyage does not allow the controller to leave synchronization during Transit Priority service. This is accomplished by preventing the coord phases from being terminated prior to their normal force-off points. The following rules apply to the use of Transit Priority during coordination:

1. Coordinated phases will not be terminated early during Transit Priority. [However, it IS possible to prevent the actuated extension of a coordinated phase during Transit Priority, as shown in Transit Priority Example #2.]
2. Phase lengthening is accomplished by using Alternate Transit Phase Force-offs to set new, larger force-offs for the transit phases. Bus Extend times only have a role in lengthening non-coord phases prior to their force-off point.

When Transit Priority is activated during coordination the current coord plan continues to run. However the transit phase, per ring, will use the force-offs from the Alternate Transit Phase Force-offs. As an example consider an intersection that has TP1 associated with coord phases 2 and 6 and TP2 associated with phase 4.

Case 1 - If TP2 is active all of the normal coord plan force-offs will be used except for phase 4. Phase 4, the transit phase, will use the force-off from the Alternate Transit Phase Force-offs.

Case 2 – If TP1 is active, and the transit priority is cleared before the normal force-off for coord phases 2 and 6, all of the normal coord plan force-offs will be used.

Case 3 – If TP1 is active, and the transit priority extends the coord phases beyond their normal force-offs, they will use the force-offs from the

Alternate Transit Phase Force-offs. For the remainder of this cycle the minor phase force-offs are automatically adjusted to accommodate for the fact that the minor phases started later than normal. These forward adjustments to the minor phase force-offs are described in detail at the end of Transit Priority Example #1.

Any of the coord plans 1-16 can be used with Transit Priority. This is done by converting one of the coord plans 17-32 from a coord plan into a table of Alternate Transit Phase Force-offs. This table is linked to one of the coord plans (1-16).

Non-coordinated, non-transit phases can be terminated early, just as in free operation. Any transit phases (coord phase or non-coord phase) can be lengthened by setting new force-offs via Alternate Coord Plan programming.

Transit Priority Inputs and TOD Circuits

There are four types of ground-true inputs related to Transit Priority in Voyage:

1. TPR(1-8) - These are the inputs that call for transit service, called Transit Priority Inputs (1-8).
2. CTP(1-8) - These are inputs used to clear or terminate Transit Priority service, called Clear Transit Call (1-8).
3. IST(1-8) - These are eight phase-related inputs that are used to prevent the short timing of individual phases during Transit Priority, called Inhibit Transit Short Timing (1-8).
4. ITP - There is a single input that inhibits all Transit Priority service, called Inhibit Transit Priority.

More detail on these inputs can be found in the chapter called Input/Output Configuration.

There are also four types of TOD circuits related to Transit Priority that can be activated by means common to all clock circuits (by using a time clock day program, by circuit mapping to a coord plan, by an Internal Logic program, or manually). The four types of circuits are; Transit Group Timing Plans (1-8), Inhibit Transit Priority, Inhibit Transit Short Timing (1-8), and Enable Transit Log. More detail on these TOD circuits can be found in the Time Clock chapter.

Non-transit Uses for Transit Priority

Transit priority programming is available for non-transit applications. A possible use is *queue clearing*, where full preemption is not desirable, but prioritizing a movement would benefit the flow of traffic. Transit Priority programming combined with Internal Logic programming gives the user of Voyage complete freedom to design powerful, customized solutions to special traffic problems.

Viewing Transit Priority Activity in Real-time

Special Run Mode screens are provided for viewing the status of Transit Priority inputs and timers. The screens are fully described in the Run Mode section of this manual.

Viewing Transit Priority Logs

Special Logs are provided for viewing the status of Transit Priority inputs and timers. The logs are fully described in the Run Mode section of this manual. To activate transit logging, enable TOD circuit 137.

Truck Priority Description

Truck Priority is a sub-function of Transit Priority that allows a phase to be extended to serve a late arriving truck. There are two basic ways that Truck Priority can be accomplished using the Voyage software. First, an external device can be used to determine the presence of a truck and to place a normal Transit Priority call into the controller. The other option is to create a detection "trap" of two detection zones, route the detection inputs into Voyage, and allow Voyage to determine the presence of a truck and internally place a priority call. The balance of this discussion assumes the use of the latter approach.

Each Truck Priority function (4 available) is assigned to a Transit Priority function. Transit Priority allows a desired phase to be extended beyond its normal max time or force off point. At a minimum, the Transit Priority functions need to be programmed with a phase assignment and a "Bus Extend" time. Note that "Bus Extend" is only applicable during free operation. During coordinated operation it is necessary to use an alternate force off plan.

The diagram on the next page shows the required layout and terminology applicable to Truck Priority. Critical programming values include the Stop Bar Distance, the Trap Distance, the Minimum Length (truck length threshold, in feet), the Minimum Speed (truck speed threshold, in mph), and the detector input numbers. All calculations are made "on the fly" in Voyage. Run screens are available to show the results of the calculations in real time and Transit Priority logs can be used to monitor/study historical priority events.

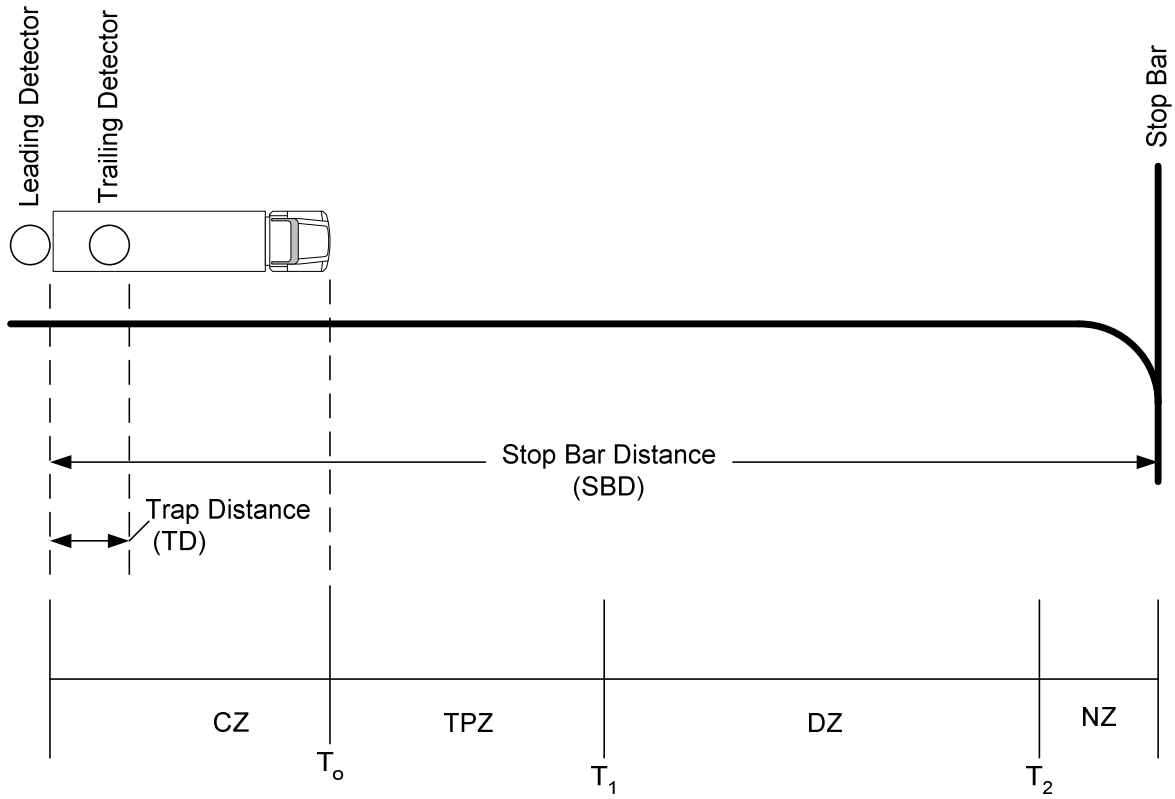

Terms and Formulas
CZ = Classification Zone
TPZ = Truck Priority Zone. Begins after truck is classified.
DZ = Dilemma Zone
NZ = No Extension Zone

T_0 = Initial time loaded in the Truck or Un-Size Timer. Time until the front of the vehicle reaches the stop bar. This value is calculated independently for each vehicle and loaded into a timer. Truck Timer if the vehicle is classified as a truck. Un-Size Timer if not a truck (under the minimum truck length).
T_1 = Time from the beginning of the Dilemma Zone to the stop bar. Calculated independently for each non-truck vehicle. $T_1 = t + V/(20 - 0.64G)$, where t is 1 sec, V is the velocity of the vehicle in ft/s, and G is the downhill grade.
T_2 = Current passage or gap time.

Truck Priority Logic
For trucks, **apply Transit Priority** when TRUCK TIMER > T_2, unless the remaining available green time is < TRUCK TIMER.
For non-trucks, **apply phase extension** when UN-SIZE TIMER < T_1 and UN-SIZE TIMER > T_2.

Each Truck Priority keeps track of 10 individual vehicles and applies Transit Priority (or phase extension if non-truck) as needed.

Transit Priority Programming Screens

To make changes to Transit Priority programming, bring up the MAIN MENU display by pressing the **NEXT** key.

```
                --MAIN MENU--

        1.RUN MODE        3.UTILITIES

        2.PROGRAM MODE

         -- AUX Switch ON = Stop Time --
            --USE F KEY FOR HELP--
```

Select 2. **PROGRAM MODE**

```
            --PROGRAM MODE MENU--

1.SECURITY CODE  5.PREEMPTION     8.I/O
2.CONTROLLER     6.COMM/REPORT      CONFIG
3.COORDINATION   7. TRANSIT       9.INTERNAL
4.TIME CLOCK        PRIORITY        LOGIC
```

Select 7. **TRANSIT PRIORITY**

```
   --TRANSIT PRIORITY PROGRAMMING MENU--
1. TP PHASES            5. GRP TIMES: MAX/WALK
2. PE ENABLE/PRIOR/     6. ALT TRANSIT PHASE
   MEMORY/DELAY/           FORCE-OFF MENU
   MIN RESERVICE        7. CRD PLAN PARAMETERS
3. OVERRIDE/BUS EXT     8. CRD TOD CKT MAPPING
4. FREE MODE/MIN        9. TRUCK PRIORITY
   RESERVICE ALL
```

Select 1. **TP PHASES**

```
                --TRANSIT PRIORITY PHASES--
X = Active            PHASE NUMBERS
FUNCTION      1   2   3   4   5   6   7   8   CURSOR
TP 1              X               X
TP 2                      X
TP 3
TP 4
              --PGDN(A)/UP(B) FOR MORE--
```

Select a single phase, or two compatible phases to be designated as transit phase(s) for a given transit priority function. To select phases, use the arrow keys to move the cursor to the appropriate transit priority input row then press the phase number to toggle the phase on or off (X = on). Use the **E** key or arrow keys for entering the data. To cancel a database entry change before entering the new data, use the **C** key to restore the previous database value.

The transit phases will be serviced and extended for transit vehicles on a per input basis. It allows these phases to be reached quicker than normal and to stay in the movement longer than normal. In this manner, the TP vehicle requesting service will get through the intersection without additional delays.

Press the **A** key (Advance) to go to the **TRANSIT PRIOR/MEM/DELAY/MIN RESERVICE MENU**.

-TRANSIT PRIOR/MEM/DELAY/MIN RESERVICE-

TP	1	2	3	4	5	6	7	8
PE ENAB	1	1	0	0	0	0	0	0
PRIOR	8	7	0	0	0	0	0	0
MEMORY	0	0	0	0	0	0	0	0
DELAY	0	0	0	0	0	0	0	0
MIN RES	5	8	0	0	0	0	0	0

--PGDN(A)/UP(B) FOR MORE--

PE ENAB – If enabled, TP inputs are acceptable as 6.25 hz pulsing signals on preempt inputs 1-8 (0 = disabled, 1 = enabled).

PRIOR - Transit priority inputs can have priorities assigned (0-8). The highest number has priority, and those of the same value are served on a first come first served basis.

MEMORY – If enabled, causes transit input to be remembered until check out using Clear Transit Priority input (mappable) or Override timer times out(0-255 seconds, this also disables input) or Fail Timer times out (255 seconds) or BUS EXT timer times out and input not active or either ITP TOD/input active or Force-Off on TP phase(s) while in coordination and input is not active (0 = disabled, 1 = enabled).

DELAY - Time the transit priority will not be served until the delay timer (0-255 seconds) times out, assuming a continuous transit call.

MIN RES – Time following the service of transit priority during which additional transit calls are ignored. Minimum re-service timer (0-255 minutes) will not be initialized unless the input has been active for 5 seconds and the transit priority input is not active.

Press the **A** key (Advance) to go to the **TRANSIT PRIORITY OVERRIDE & BUS EXTEND MENU**.

--TRANSIT PRIORITY OVERRIDE & BUS EXTEND--

TP	1	2	3	4	5	6	7	8
OVRRIDE	0	0	0	0	0	0	0	0
BUS EXT	0	0	0	0	0	0	0	0

--PGDN(A)/UP(B) FOR MORE--

OVRRIDE – The Override timer starts timing down upon the activation of the transit input and continues as long as the call remains. If it times out, it causes the transit input to be disabled until the input becomes inactive (0 –255 seconds).

BUS EXT - Bus Extension times (0-255 seconds) are used to extend the max green time for transit phases. When memory is on, if bus extend times out and the transit input not active, the transit call is reset. Used in both free and coordinated operation, but coordination also uses force-offs to extend TP phases to a programmed point in the cycle.

Failed Timer - This has no setting, but uses a fixed 255 seconds. If the input is active for 255 seconds, the input is disabled.

Press the **A** key (Advance) to go to the **MIN RESERVICE ALL/FREE MODE MENU**.

```
MIN             |        |
RESERVICE       |FREE    |
ALL             |MODE    |
      60        |   0    |
    (0-255)     | 0 = Use Shortest of Max 1 or
                |      Max 2, Standard Walks
                | 1-8 = Use MAX/Walk Group 1-8,
                | 9 = Use TOD TP Group Plan
```

MIN RESERVICE ALL - Min reservice all (0-255 minutes) applies globally to all transit inputs and will not allow reservice during this time. It will not be initialized unless the input has been active for 5 seconds and the transit priority input is not active.

FREE MODE - When in free operation, max time for shortening non-transit phases can be the shorter of max 1 or 2 with normal walks, or Transit Group Times with TOD override or use TOD circuits (circuits 81-88) with alternate walk times.

Press the **A** key (Advance) to go to the **TP GROUP (1-8) TIMING PLAN MENUS**.

```
                --TP GROUP 1 TIMING PLAN--
PHASE    1    2    3    4    5    6    7    8
MAX      8    0    7   11    8    0    7   11
WALK     0    0    0    5    0    0    0    5
                --TP GROUP 2 TIMING PLAN--
MAX      0    0    0    0    0    0    0    0
WALK     0    0    0    0    0    0    0    0
              --PGDN(A)/UP(B) FOR MORE--
```

MAX - TP Group Max times (0-255 seconds) are used during free or coordinated operation to shorten non-transit phase greens (but only those non-transit phases that are necessary to achieve the transit phase). If programmed as “0”, or a value

larger than the normal max time, use the normal max time for that phase. During coordination, enable TP group times by activating TOD circuits TG1-8 (circuit numbers 81-88).

WALK - TP Group Walk times (0-255 seconds) are used during free or coordinated operation to shorten non-transit phase walks. During coordination, enable TP group times by activating TOD circuits TG1-8 (circuit numbers 81-88). If programmed as “0”, or a value larger than the normal walk time, use the normal walk time.

Press the **A** key (Advance) to go to the **ALTERNATE TRANSIT PHASE FORCE-OFF MENU**.

```
-ALTERNATE TRANSIT PHASE FORCE-OFF MENU-
CUR CPLN   1   2   3   4   5   6   7   8
ALT  TPFO 17   0   0   0   0   0   0   0

CUR CPLN   9  10  11  12  13  14  15  16
ALT  TPFO  0   0   0   0   0   0   0   0

RANGE: 0, 17-32     --PGDN(A)/UP(B) FOR MORE--
```

ALT TPFO - Alternate Transit Phase Force-offs (stored as needed in former coord plans17-32) are used for transit phase force-offs during a transit priority event. The Alternate Transit Phase Force-offs provide temporary force-off points that are used by ONLY the transit phases to extend the green. Coordinated phases will be treated normally until the force-off point. The coordinated phases can not be shortened, only extended. A transit phase that is not the coord phase can use the BUS EXT time to hold the green beyond its normal max time prior to the alternate transit phase force-off point.

If programmed as “0”, no transit priority will be allowed with the current coord plan. If a current coordination plan that is greater than 16 is in use, no transit priority will be allowed. If the memory function is on, and if the transit phase force-off occurs while the transit input is not active, the transit call is reset.

Press the **A** key (Advance) to view the Coord Plan program screen for coord plan 1. Then enter the number (17-32) of the Transit Phase Force-offs program screen to be viewed. If a coord plan (17-32) has been selected to be an **ALT TPFO**, its input screen is modified to appear like the one below:

```
ALT TPFO:   17<                          For Transit Priority.
TP          1    2    3    4    5    6    7    8
PH          26   00   00   00   00   00   00   00
                -- PHASE FORCE-OFF POINTS --
            1    2    3    4    5    6    7    8
CP  1       54    0   17   37   54    0   17   37
TPFO        0    10    0    0    0   10    0    0
               --PGDN(A)/UP(B) FOR MORE--
```

TP – Transit priority functions 1-8 (not programmable on this screen).

PHS – The transit phases associated with the transit functions (not programmable on this screen).

CP XX – The coord plan that will use the transit force-offs (**TPFO**) for the transit phases (CP XX is not programmable on this screen).

TPFO – Transit priority force-offs are the programmable alternate force-off points used to extend the transit phases when in coordination (0-255 seconds).

Press the **ESC** key (Prior Menu) to return to the **TRANSIT PRIORITY PROGRAMMING MENU**. Press **9** to go to **TRUCK PRIORITY**.

```
            --TRUCK PRIORITY–
                          1    2    3    4
ASSOCIATED TP             1    0    0    0
LEADING DET              19    0    0    0
TRAILING DET             20    0    0    0
STOP BAR DIST           500    0    0    0
TRAP DISTANCE          16.0    0    0    0
        --PGDN(A)/UP(B) OR MORE--
```

```
            --TRUCK PRIORITY–
                          1    2    3    4
MINIMUM SPEED            30    0    0    0
MINIMUM LENGTH           40    0    0    0
DOWNHILL GRADE            0    0    0    0
UPHILL GRADE              4    0    0    0
UNDERSIZE VEH             0    0    0    0
        --PGDN(A)/UP(B) OR MORE--
```

There are two Truck Priority programming screens. Any or all of the four available Truck Priority functions can be programmed using these screens and the associated Transit Priority programming screens.

ASSOCIATED TP – Assign a Transit Priority function 1-8 to the Truck Priority function. A valid Truck Priority call is viewed by the controller as a valid Transit Priority call, thus allow phase extension to occur.

LEADING DET – Assign a detector input number (1-32) for the trap loop that is farthest from the stop bar.

TRAILING DET – Assign a detector input number (1-32) for the trap loop that is closer to the stop bar. The trailing detector input must be different then the leading detector input.

STOP BAR DIST – Enter the distance (0-999 ft) from the leading detector's trailing edge to the stop bar.

TRAP DISTANCE – Enter the distance (0-25.5 ft) between the leading and the trailing detectors, center-to-center.

MINIMUM SPEED – Enter the minimum speed needed to detect a truck (0-100 mph).

MINIMUM LENGTH – Enter the minimum length needed to detect a truck (0-255 ft).

DOWNHILL GRADE – Enter the downhill grade (0 to 20%). Only needed if the undersize vehicle feature is enabled.

UPHILL GRADE – Enter the uphill grade (0 to 20%). Only needed if the undersize vehicle feature is enabled.

UNDERSIZE VEHICLE – Enable or disable (1=on, 0=off). This feature causes the controller to place a vehicle call at the appropriate times to assist undersize vehicles through the intersection. An undersize vehicle is one that is shorter than the programmed Minimum Length. This feature would not be used where good delimma zone detection is in place.

Transit Priority Examples

Transit Priority Example #1

8-Phase Intersection with Bus on Coord Phases 2 & 6

This shows the setup for adding transit priority to an 8 phase intersection. The intersection is Free in the evening and runs AM and PM coordination plans. During the midday it also runs a coordination plan. Transit priority input 2 is linked to phase 2 and transit priority input 6 is linked to phase 6. The bus places a call via a side mount data reader at a point 300' in advance of the stopbar. On the far side of the intersection there is a side mount data reader that puts in a check out. There are far side bus stops. The four inputs, their locations and their codes are shown below.

This transit priority will shorten the minor phases 1, 5, 3, 7, 4 & 8 to get to the transit associated coord phases sooner. It will also lengthen the transit associated coord phases.

The input assignments below are entered on the Input Configuration screen of NWSCentral.

Input	Description			Code
TPR2	Transit Priority Input #2			142
TPR6	Transit Priority Input #6			146
CTP2	Clear Transit Priority Input #2			192
CTP6	Clear Transit Priority Input #6			196

The transit priority input data for this intersection is shown below:

Free Operation Mode - 9 - Use Time of Day Circuits

For each coord plan there is a set of alternate transit phase force-offs that have force-off values for the transit phases.

	Midday	AM	PM
Current Coord Plan	1	2	3
Alternate TPFO	21	22	23

	TP 2	TP 6
Transit Priority Phases	2	6
Memory	Yes	Yes
Priority	1	1
Override (sec.)	0	0
Bus Extend (sec.)	16	16
Min Reservice (min.)	5	5

Transit Priority Example #1: Continued

Transit Priority Group Plan 1 - Coord Plan 1 - Offpeak & Free
Transit Priority Group Plan 2 - Coord Plan 2 - AM
Transit Priority Group Plan 3 - Coord Plan 3 - PM

	1	2	3	4	5	6	7	8
GP1 - Max	8	0	7	11	8	0	7	11
GP1 - Walk		0		5		0		5
GP2 - Max	8	0	8	12	12	0	8	12
GP2 - Walk		0		5		0		5
GP3 - Max	10	0	8	10	8	0	8	12
GP3 - Walk		0		4		0		4

Some of the other controller input data for this intersection is shown below:

The coordination data for plan 3 and alternate transit phase force-offs 23 are shown below.
Note that the coord plan 1 has a fixed permissive and coord phase normal force-offs of 0.
There are similar alternate transit phase force-offs 21 & 22.
The controller is set for Coordinated Walk Rest.

PM Coord Plan	3	23
Ring 1 Coord Phase	2	-
Ring 2 Coord Phase	6	-
Cycle Length	100	-
Permissive	0	-
Min Cycle Length	0	-
FO 1	66	-
FO 2	0	14
FO 3	20	-
FO 4	46	-
FO 5	62	-
FO 6	0	14
FO 7	20	-
FO 8	46	-

Some of the per phase data is shown below.

	1	2	3	4	5	6	7	8
Min Green	3	10	3	8	3	10	3	8
Yellow	3.0	5.0	3.0	4.0	3.0	5.0	3.0	4.0
Red Clearance	1.0	1.0	1.0	1.0	1.0	1.0	1.0	1.0
Max 1 & 2	30	60	30	30	30	60	30	30
Walk		8		8		8		8
Ped Clear		12		15		12		14

Transit Priority Example #1: Continued

The proper transit priority group plan is called via coordination plan circuit mapping.

Circuit Map	Coord Plan	Time Clock Circuit
1	0 - Free	81 - Group 1
2	1	81 - Group 1
3	2	82 - Group 2
4	3	83 - Group 3

Figure 41: Phase and Ring Diagrams

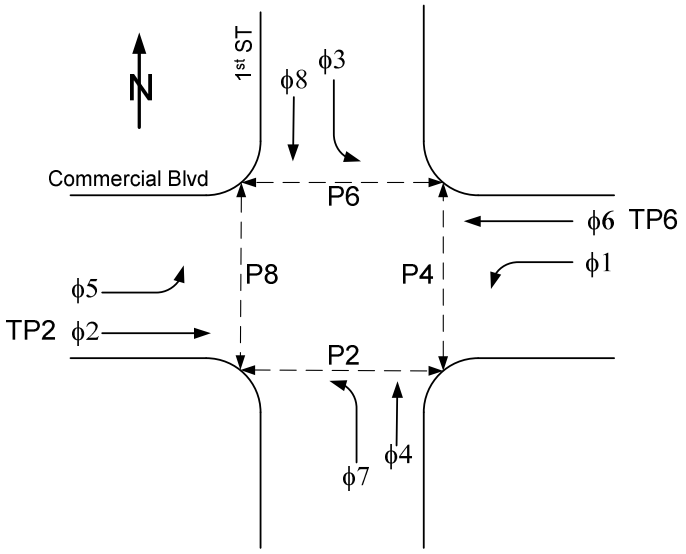

PM Plan 3 Cycle = 100 seconds
Full actuation to force-off or Max
Peds 4 & 8 called
No Transit Priority
Note: 6 Green/Walk begins at 66

In AM flow is EB
In PM flow is WB

1	2	3	4
5	6	7	8

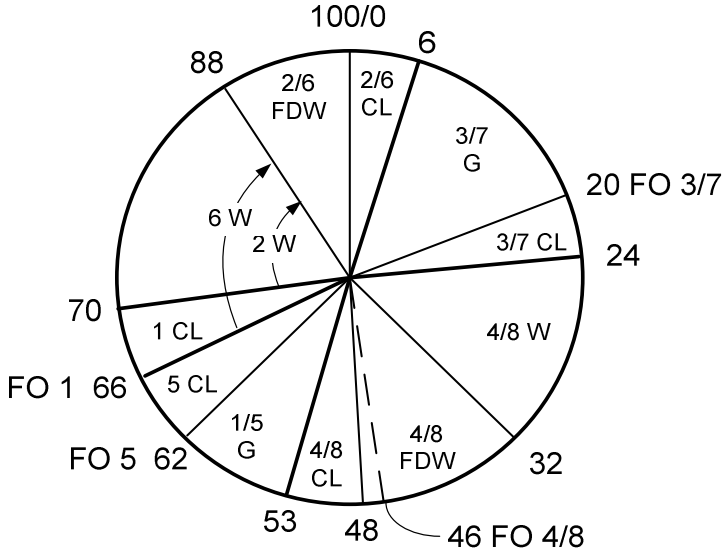

Transit Priority Example #1: Continued

Transit Priority Shortening of Minor Phases

PM Plan 3 is associated with Transit Priority Alternate Transit Phase
Force-offs 23
Assume transit priority call (TP6) received during phase 3 & phase 7 min green
Assume transit priority clear (CTP6) received at 60 in the local cycle during phase 2
Full actuation to Force-off or Max
Peds 4 & 8 called
Shows shortening of minor phases to get to transit phase (6) sooner
Notes: 6 Green/Walk begins at 54
If 4/8 ped had not been called, 6 Green/Walk would begin at 47
Phase 1 is not shortened since it does not aid in achieving the transit phase

Figure 42: Ring Diagram

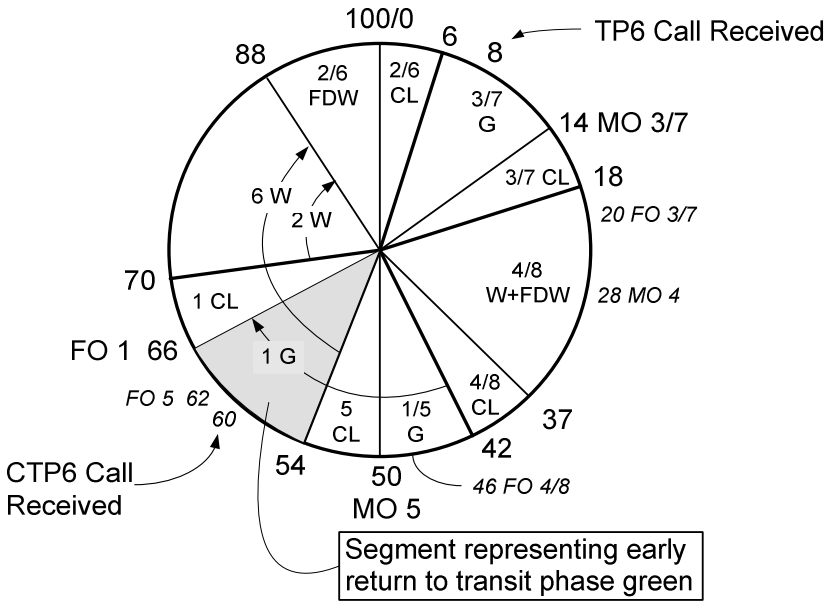

Transit Priority Example #1: Continued

Transit Priority Lengthening of Transit/Coord Phase

Assume transit priority call (TP6) received during phase 2 & phase 6 Green
Assume transit priority clear (CTP6) received at 12 in the local cycle
Full actuation to Force-off or Max
Peds 4 & 8 called
Shows lengthening of transit phase (6) for 12 seconds for a late bus
Phase 6 could have been lengthened to 14, it's force-off in Alternate Transit Phase Force-offs 23
Note: Voyage automatically increases the force-offs for minor phases by a portion of the actual bus extension time. Each minor phase force-off is extended by the actual bus extension multiplied by a factor of the proportionate distance from the last force-off.

Figure 43: Ring Diagram

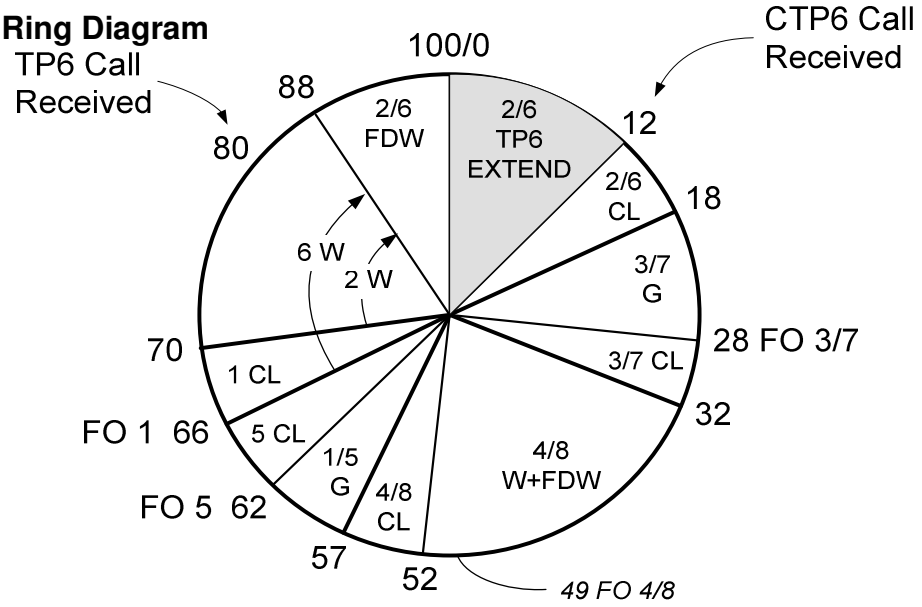

The following calculations relate to the automatic force-off adjustments mentioned in the previous paragraph. This information is presented only for those users that desire to know the intricacies of the internal calculations.

Calculation of New FO w/ 12 seconds of bus extension for TPR6 - Phase 6
E = Actual Bus Extension = 12 LFO = Last Force-off = 66 (Phase 1)
NFO = New Force-off Note: NFO is rounded down before use.
Note: Phases 4 & 8 use the transit group Walk times

Phase	FO	D = LFO-FO	N = D/LFO	NFO = FO + (N * E)
1	66	0	0.00	66
3	20	46	0.70	28.4
4	46	20	0.30	49.6
5	66	0	0.00	66.0
7	20	46	0.70	28.4
8	46	20	0.30	49.6

Transit Priority Example #2

8-Phase with Buses on Coord Phases 2 & 6 and Phase 5, w/ Actuated Coordination

This shows the setup for adding transit priority to an 8 phase intersection. The intersection is Free in the evening and runs AM, PM and midday coordination plans. The coord phases 2 & 6 have force-off values that range from 10 to 12. These coord phases can extend, when actuated, to some point between local cycle zero and their force-off values.

The buses place calls via a special code from their OPTICOM™ emitter that calls for low priority. The EB buses have a further code that only calls Transit Priority Input #2. The buses whose route turns left at the intersection have a further code that only calls Transit Priority Input #5. All of the bus stops are on the east side of the intersection. I.E., the EB and EB to NB buses have far side stops and the WB bus has a nearside stop. When the WB bus stops at the nearside stop and opens its doors its emitter is turned off. A 4-channel OPTICOM emitter is installed in slots J12 & J13 and is used for emergency vehicle preempt and for transit priority. A 2-channel OPTICOM emitter is installed in slot J11 and is only used for transit priority.

Transit priority #2 & #6 will shorten the minor phases to get to the coord phases sooner. Consider transit priority #2, between local zero and the phase 2 force-off, the transit priority will extend the phase even if there is no vehicle actuation. When the transit priority goes false and when there is no vehicle actuation for phases 2 and 6 then phases 2 and 6 will go Yellow. Alternately, if the transit priority associated coord plan phase 2 force-off is reached, then phases 2 and 6 will go Yellow.

Transit priority #5 will shorten preceding minor phases (3, 4, 7, & 8) to get to phase 5 sooner. Once in phase 5, transit priority #5 can lengthen the phase to the transit priority associated force-off. This example demonstrates a special case where transit priority #5 can inhibit the extension of the coord phases, once they are beyond Local ‘0’. This is described in more detail later in this example.

The input assignments below are entered on the Input Configuration screen of NWSCentral.

Input	Description			Code	Normal EV Operation
TPR2	Transit Priority Input #2			151	EVA
TPR6	Transit Priority Input #6			152	EVB
TPR5	Transit Priority Input #5			155	n/a

The transit priority programming data for this intersection is shown below:

Free Operation Mode - 9 - "Use Time of Day Circuits"

For each coord plan there is an alternate coord plan that has force-off values for the transit phases.

	Midday	AM	PM
Current Coord Plan	1	2	3
Alternate TPFO	21	22	23

Transit Priority Example #2: Continued

	TP 2	TP 5	TP 6
Transit Priority Phases	2	5	6
Enable 6.5 Hz PE Input	Yes	Yes	Yes
Memory	No	No	No
Priority	2	1	2
Override (sec.)	0	0	0
Bus Extend (sec.)	16	16	16
Min Reservice (min.)	2	2	2

Transit Priority Group Plan 1 - Coord Plan 1 - Offpeak & Free
Transit Priority Group Plan 2 - Coord Plan 2 - AM
Transit Priority Group Plan 3 - Coord Plan 3 - PM
Transit Priority Group Plan 4 - Coord Plan 3 - Peak of PM Peak from 16:50 - 17:25

	1	2	3	4	5	6	7	8
GP1 - Max	8	0	7	11	8	0	7	11
GP1 - Walk		0		5		0		5
GP2 - Max	8	0	8	12	12	0	8	12
GP2 - Walk		0		5		0		5
GP3 - Max	10	0	8	10	8	0	8	12
GP3 - Walk		0		4		0		4
GP4 - Max	8	0	6	8	8	0	6	8
GP4 - Walk		0		4		0		4

Some of the other controller input data for this intersection is shown below:
The coordination data for plan 3 and alternate transit phase force-offs 23 are shown below. Note that coord plan 3 uses the alternate permissive value of 0 and coord phase normal force-offs are greater than 0, due to actuated coordination. There are similar alternate transit phase force-offs 21 & 22.
The controller does NOT use Coordinated Walk Rest.

PM Plan	3	23
Ring 1 Coord Phase	2	-
Ring 2 Coord Phase	6	-
Cycle Length	100	-
Permissive	0	-
Min Cycle Length	0	-
FO 1	74	0
FO 2	12	20
FO 3	30	0
FO 4	56	0
FO 5	72	77
FO 6	12	20
FO 7	30	0
FO 8	56	0

Transit Priority Example #2: Continued

Some of the per phase data is shown below.

	1	2	3	4	5	6	7	8
Min Green	3	10	3	8	3	10	3	8
Yellow	3.0	5.0	3.0	4.0	3.0	5.0	3.0	4.0
Red Clearance	1.0	1.0	1.0	1.0	1.0	1.0	1.0	1.0
Max 1 & 2	20	60	18	30	20	60	18	30
Walk		7		7		7		7
Ped Clearance		12		15		12		14

Except for group 4, the transit priority group plans are called via coordination plan circuit mapping. Group 4 is called via Time of Day event scheduler .

Circuit Map	Coord Plan	Time Clock Circuit
1	0 - Free	81 - Group 1
2	1	81 - Group 1
3	2	82 - Group 2
4	3	83 - Group 3

Figure 44: Normal Operation w/o Transit Priority

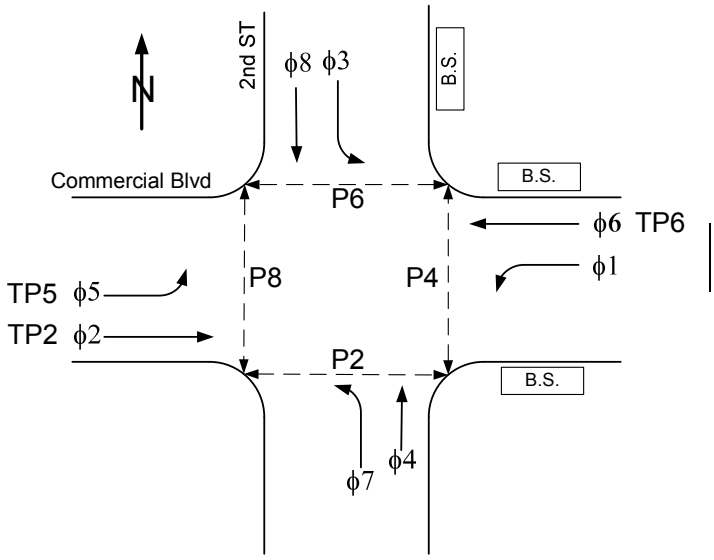

PM Plan 3 Cycle = 100 seconds
Full actuation to force-off or Max
Peds 4 & 8 not called
No Transit Priority

In AM flow is EB
In PM flow is WB

1	2	3	4
5	6	7	8

Transit Priority Example #2: Continued

Figure 45: Ring Diagram

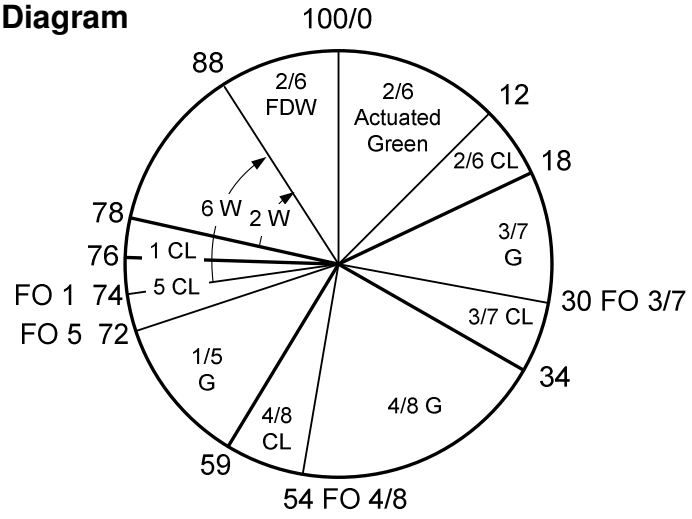

Transit Priority Lengthening of Coord Phases

PM Plan 3 is associated with Alternate Transit Phase Force-offs 23
Assume transit priority call (TP6) received during phase 2 & phase 6 Green at 17:05, Group 4 is active
Assume transit priority dropped at 18 in local cycle during phase 6 Transit Priority Green extention
Full actuation to force-off or Max
Peds 4 & 8 not called
Shows lengthening of transit coord phase 6 to 18 in the local cycle
Phase 6 could have been lengthened to 20, its Plan 23 force-off

Note: Voyage automatically increases the force-offs for minor phases by a portion of the actual bus extension time. Each minor phase force-off is extended by the actual bus extension multiplied by a factor of the proportionate distance from the last force-off.

Figure 46: Ring Diagram

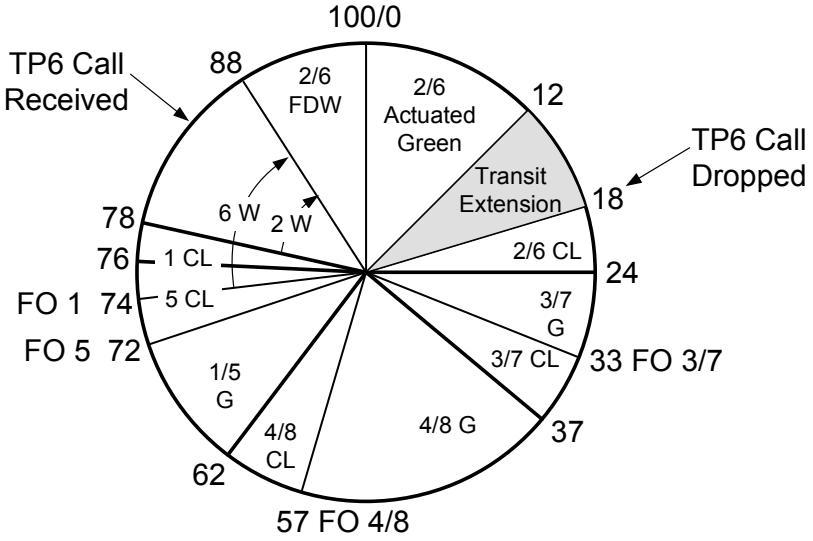

Transit Priority Example #2: Continued

Transit Priority for Minor Phase

As stated previously, transit priority #5 will shorten preceding minor phases (3, 4, 7, & 8) to get to phase 5 sooner. Once in phase 5, transit priority #5 can lengthen the phase to the transit priority associated force-off.

Assume transit priority call (TP5) received during phase 3 & phase 7 Min Green
Assume transit priority call (TP5) dropped at 75 in local cycle during phase 5, Green extension
Full actuation to force-off or Max
Peds 4 & 8 not called
Shows lengthening of transit phase 5 for 8 seconds beyond its normal max of 20
Phase 5 could have been lengthened to 77, its Alternate Transit Phase Force-offs 23 force-off & its bus extension
Shows shortening of phases 3, 4, 7, and 8 to transit group 3 max and walk values

Figure 47: Ring Diagram

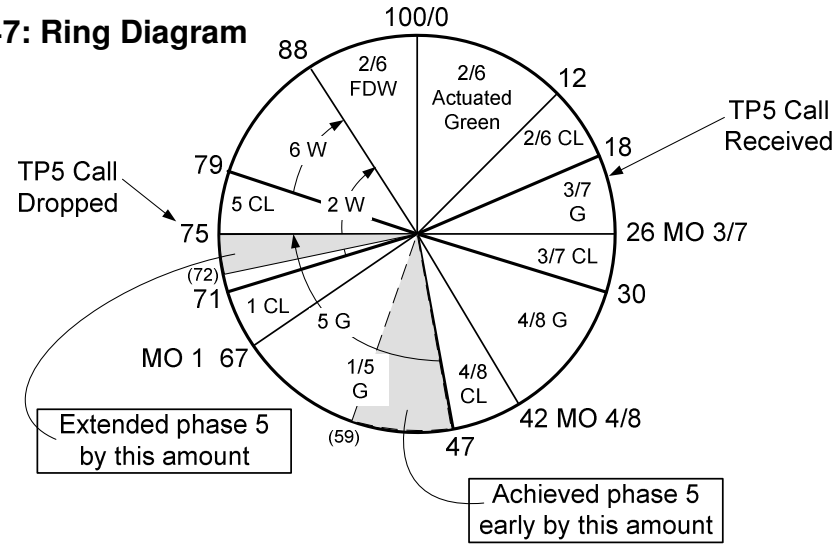

There is a special circumstance under which the user might wish to have transit priority #5 inhibit the extension of the coord phases (2 & 6), once beyond local '0'. This would be in the AM operation, which has heavy EB flow, when transit priority #5 is called but transit priority #2 is not called. To enable this operation the six vehicle detectors associated with phase 2 and 6 are programmed as Inhibit Detectors. These detectors will only be inhibited when TOD circuit #117 is active. The following internal logic program is used to energize the detector inhibit circuit (#117).

This logic package is for TP Ex #2. Allows a left turning bus on transit priority 5 to suppress the extention of the actuated coordinated phases (2 & 6). This should only be allowed during the AM peak when coord plan 2 is active. Further, this is only allowed if transit priority 2 is not being called.

Step	Value	Line Description	Sub Module Description
1	215	Activate TOD circuit	
2	117	Circuit # (Inhibit Detectors)	
3	30	Transit priority active test	Turn on inhibit selected detectors TOD circuit when transit priority 5 is active, transit priority 2 is not active, and the controller is running coord plan 2.
4	5	Transit priority	
5	20	And	
6	24	Not	
7	30	Transit priority active test	
8	2	Transit priority	
9	20	And	
10	25	Coord plan test	
11	2	Coord plan #	

Transit Priority Example #3

8-Phase with Buses on Coord Phases 2 & 6 and Phases (4 & 7) and 8

This shows the setup for adding transit priority to an 8 phase intersection. The intersection is Free in the evening and runs AM and PM coordination plans. At the peak of the AM and PM periods there are secondary plans. During the midday it also runs a coordination plan.

Each of the four approaches has transit priority for the through movement. In addition for the NB movement the bus can go through or turn left and transit priority #4 is assigned to phases 4 &7.

Transit Priority #	Phases
2	2
4	4 & 7
6	6
8	8

The buses place calls via electronic tag readers on the side of the road. These detection points are 300' in advance of the stopbar. All bus stops are far side. All four approaches have bus priority. The NB approach calls phases 4 and 7. There is no second detection point to clear the transit calls. This lack of a second detection point presents a problem where a bus could continue to influence the signal timing long after it has cleared the intersection. The various cases and the solutions are described in the table below:

Note: Cases 1-4 below deal with coordination, cases 5 & 6 deal with Free

Case	Problem	Solution
1	Transit on coord phase w/ call before reaching transit phase.	Use internal logic to clear transit priority when transit phase Green is reached. Ensure transit priority long enough to get to intersection.
2	Transit on minor phase w/ call before reaching transit phase.	Use internal logic to clear transit priority when transit phase Green is reached. Ensure transit priority long enough to get to intersection.
3	Transit on coord phase w/ call during transit phase.	Use internal logic to ensure transit priority long enough to get to intersection.
4	Transit on minor phase w/ call during minor phase.	No action allow bus extension to transit associated phase force-off.
5	Transit on phase w/ call before reaching transit phase.	Use internal logic to clear transit priority when transit phase Green is reached. Ensure transit priority long enough to get to intersection.
6	Transit on phase w/ call during transit phase Green.	Use internal logic to ensure transit priority long enough to get to intersection.

An Internal Logic package has been developed for Case #3. Transit priority programs 2, 4, 6, & 8 need to be cleared with their respective clear inputs after the associated Green is reached. In addition, the transit call must be on for at least 12 second to allow the bus to place the call and reach the stopbar. This logic will turn on the associated clear transit priority input after the transit call has been on for at least 12 seconds and the associated transit phase Green is on.

Transit Priority Example #3: Continued

Step	Value	Line Description	Sub Module Description
1	208	Load a timer	Load timer #2 with 12 seconds when Transit Priority Input #2 is set & begin decrementing when Transit Priority Input #2 is released.
2	2	Timer #	
3	12.0	Timer value (seconds)	
4	22	Test if input is on	
5	142	Input # (Transit Priority #2)	
6	206	Turn on an input if test string is true	Turn on Clear Transit Priority #2 if Timer #2 is timed out and Phase 2 is Green.
7	192	Input # (Clear Transit Priority #2)	
8	24	Not	
9	27	Test a timer	
10	2	Timer #	
11	20	And	
12	21	Phase condition test	
13	2	Phase #	
14	11	Green	
15	208	Load a timer	Load timer #4 with 12 seconds when Transit Priority Input #4 is set & begin decrementing when Transit Priority Input #4 is released.
16	4	Timer #	
17	12.0	Timer value (seconds)	
18	22	Test if input is on	
19	144	Input # (Transit Priority #4)	
20	206	Turn on an input if test string is true	Turn on Clear Transit Priority #4 if Timer #4 is timed out and Phase 4 is Green.
21	194	Input # (Clear Transit Priority #4)	
22	24	Not	
23	27	Test a timer	
24	4	Timer #	
25	20	And	
26	21	Phase condition test	
27	4	Phase #	
28	11	Green	
29	208	Load a timer	Load timer #6 with 12 seconds when Transit Priority Input #6 is set & begin decrementing when Transit Priority Input #6 is released.
30	6	Timer #	
31	12	Timer value (seconds)	
32	22	Test if input is on	
33	146	Input # (Transit Priority #6)	
34	206	Turn on an input if test string is true	Turn on Clear Transit Priority #6 if Timer #6 is timed out and Phase 6 is Green.
35	196	Input # (Clear Transit Priority #6)	
36	24	Not	
37	27	Test a timer	
38	6	Timer #	
39	20	And	
40	21	Phase condition test	
41	6	Phase #	
42	11	Green	
43	208	Load a timer	Load timer #8 with 12 seconds when Transit Priority Input #8 is set & begin decrementing when Transit Priority Input #8 is released.
44	8	Timer #	
45	12	Timer value (seconds)	
46	22	Test if input is on	
47	148	Input # (Transit Priority #8)	
48	206	Turn on an input if test string is true	Turn on Clear Transit Priority #8 if Timer #8 is timed out and Phase 8 is Green.
49	198	Input # (Clear Transit Priority #8)	
50	24	Not	
51	27	Test a timer	
52	8	Timer #	
53	20	And	
54	21	Phase condition test	
55	8	Phase #	
56	11	Green	

Transit Priority Example #3: Continued

During coordination, transit priority #2 & #6 will shorten the minor phases to get to the coord phases sooner. If a transit priority #2 or #6 is entered during the coord phase Green it will stay on for 12 seconds. If the call comes in during the last 12 seconds of the local cycle the coord phases will be extended beyond their normal zero force-offs. The coord phases will then go Yellow 12 seconds after the transit call is placed or at the transit priority associated coord phase force-off.

During coordination, transit priority #4 & #8 will shorten any minor phases needed to get to the transit phase however they can't shorten the coord phase which must extend to its force-off at local zero. Once in the transit phase, 4 or 8, the transit priority will turn off when it has been on for 12 seconds. Transit priority 4 or 8 can extend their respective phases into the range between the normal force-off and the transit priority force-off.

The input assignments below are entered on the Input Configuration screen of NWSCentral.

Input	Description			Code	Normal EV Operation
TPR2	Transit Priority Input #2			142	VD12
TPR4	Transit Priority Input #4			144	VD17
TPR6	Transit Priority Input #6			146	VD22
TPR8	Transit Priority Input #8			148	VD27

The transit priority input data for this intersection is shown below:

Free Operation Mode - 9 - Use Time of Day Circuits

For each coord plan there is an alternate coord plan that has force-off values for the transit phases.

	Midday	AM1	PM1	AM2	PM2
Current Coord Plan	1	2	3	4	5
Alternate TPFO	21	22	23	24	25

	TP 2	TP 4	TP 6	TP 8
Transit Priority Phases	2	4 & 7	6	8
Memory	Yes	Yes	Yes	Yes
Priority	1	2	1	2
Override (sec.)	0	0	0	0
Bus Extend (sec.)	12	10	12	10
Min Reservice (min.)	5	5	5	5

Transit Priority Example #3: Continued

Transit Priority Group Plan 1 - Coord Plan 1 - Offpeak & Free
Transit Priority Group Plan 2 - Coord Plan 2 - AM1
Transit Priority Group Plan 3 - Coord Plan 3 - PM1
Transit Priority Group Plan 4 - Coord Plan 4 - AM2
Transit Priority Group Plan 5 - Coord Plan 5 - PM2

	1	2	3	4	5	6	7	8
GP1 - Max	12	30	10	16	12	30	10	16
GP1 - Walk		5		5		5		5
GP2 - Max	12	0	10	14	12	0	10	14
GP2 - Walk		0		5		0		5
GP3 - Max	12	0	10	14	12	0	10	14
GP3 - Walk		0		5		0		5
GP4 - Max	10	0	9	11	10	0	9	11
GP4 - Walk		0		5		0		5
GP5 - Max	10	0	9	12	10	0	9	12
GP5 - Walk		0		5		0		5

During the AM peak, coord plans 2 & 4, the shortening of phase 1 by transit priority is inhibit by a time clock circuit; IST1 - Inhibit TP from shortening Phase 1 - code 129. This circuit is enabled by circuit mapping to coord plans 2 & 4.

Input/Output Configuration

External Inputs

External inputs to the controller are available to modify the operation of the controller's timing plan in a predictable manner. External inputs become "true" when they are grounded. Available inputs, their associated pin numbers, and their input code numbers are shown in the charts below.

There are a number of "auxiliary" inputs which do not have an associated pin number on the A/B/C/D or C1/C11 connectors. For these to become operational, they must be assigned to an input pin. An auxiliary input can be assigned to a currently unused pin or it can be assigned to a pin which is already assigned to a different function, through pin re-assignment. The assignment/re-assignment process is simple. Just program a new input code next to the pin designation, then restart the controller. The Voyage software will accept multiple inputs for the same function and will "or" them together, so that any of the inputs will activate the function.

Inputs Listed by Function, A/B/C/D Connectors, Default Settings

Input Function		Pin	Code
Veh Detector 1	VD1	A-f	11
Veh Detector 2	VD2	A-K	12
Veh Detector 3	VD3	B-N	13
Veh Detector 4	VD4	B-L	14
Veh Detector 5	VD5	C-P	15
Veh Detector 6	VD6	C-S	16
Veh Detector 7	VD7	C-V	17
Veh Detector 8	VD8	C-t	18
Ped Detector 1	PED1	A-g	21
Ped Detector 2	PED2	A-L	22
Ped Detector 3	PED3	B-P	23
Ped Detector 4	PED4	B-M	24
Ped Detector 5	PED5	C-R	25
Ped Detector 6	PED6	C-T	26
Ped Detector 7	PED7	C-U	27
Ped Detector 8	PED8	C-W	28
Hold 1	HLD1	A-h	31
Hold 2	HLD2	A-M	32
Hold 3	HLD3	B-i	33
Hold 4	HLD4	B-h	34
Hold 5	HLD5	C-m	35

Input Function		Pin	Code
External Start	EST	A-R	81
Interval Advance	IADV	A-S	82
Min Recall All Ph	MIN	A-j	84
Man Control Ena	MCE	A-k	85
Test Input A	TSTA	A-n	91
Test Input B	TSTB	A-AA	91
Video Fail 1	VFI1	C-b	93
Video Fail 2	VFI2	A-BB	94
Video Fail 3	VFI3	B-B	95
Video Fail 4	VFI4	B-W	96
Video Fail 5	VFI5	B-X	97
Video Fail 6	VFI6	B-v	98
Video Fail 7	VFI7	D-h	99
Video Fail 8	VFI8	D-i	100
Veh Detector 9	VD9	D-C	101
Veh Detector 10	VD10	D-D	102
Veh Detector 11	VD11	D-E	103
Veh Detector 12	VD12	D-F	104
Veh Detector 13	VD13	D-G	105
Veh Detector 14	VD14	D-H	106
Veh Detector 15	VD15	D-J	107

Hold 6	HLD6	C-p	36
Hold 7	HLD7	C-EE	37
Hold 8	HLD8	C-X	38
Ped Omit 1	POM1	A-EE	41
Ped Omit 2	POM2	A-v	42
Ped Omit 3	POM3	B-j	43
Ped Omit 4	POM4	B-x	44
Ped Omit 5	POM5	B-T	45
Ped Omit 6	POM6	B-k	46
Ped Omit 7	POM7	B-m	47
Ped Omit 8	POM8	B-n	48
Veh Omit 1	VOM1	B-U	51
Veh Omit 2	VOM2	B-S	52
Veh Omit 3	VOM3	B-R	53
Veh Omit 4	VOM4	B-g	54
Veh Omit 5	VOM5	C-n	55
Veh Omit 6	VOM6	C-q	56
Veh Omit 7	VOM7	C-r	57
Veh Omit 8	VOM8	C-s	58
Force Off Ring 1	FO1	A-i	61
Stop Time Ring 1	ST1	A-N	62
Inh Max Term R1	IMT1	A-P	63
Red Rest R1	RRM1	A-x	64
Ped Recycle R1	PR1	A-FF	65
Max 2 Ring 1	MX21	A-GG	66
Omit All Red R1	ORC1	A-w	67
Force Off Ring 2	FO2	C-Y	71
Stop Time Ring 1	ST2	C-Z	72
Inh Max Term R1	IMT2	C-a	73
Red Rest R2	RRM2	C-u	74
Ped Recycle R2	PR2	B-V	75
Max 2 Ring 2	MX22	B-z	76
Omit All Red R2	ORC2	C-v	77
n/u	n/u	n/u	n/u

Veh Detector 16	VD16	D-K	108
Veh Detector 17	VD17	D-L	111
Veh Detector 18	VD18	D-M	112
Veh Detector 19	VD19	D-N	113
Veh Detector 20	VD20	D-P	114
Veh Detector 21	VD21	D-R	115
Veh Detector 22	VD22	D-S	116
Veh Detector 23	VD23	D-T	117
Veh Detector 24	VD24	D-U	118
Clock Reset	CLKR	D-V	121
Hardwire Control	HWC	D-W	122
Free	FREE	D-a	126
Alarm 1	ALM1	D-d	131
Alarm 2	ALM2	D-e	132
Alarm 3	ALM3	D-f	133
Alarm 4	ALM4	D-g	134
Alarm 5	ALM5	D-h	134
Soft Flash	SFL	D-i	136
Monitor Status	MONS	D-j	137
Door Open	DORO	D-k	138
Transit Input 1	TPR1	D-m	141
Transit Input 2	TPR2	D-n	142
Transit Input 3	TPR3	D-p	143
Transit Input 4	TPR4	D-q	144
Transit Input 5	TPR5	D-r	145
Transit Input 6	TPR6	D-s	146
Transit Input 7	TPR7	D-t	147
Transit Input 8	TPR8	D-u	148
Preempt In 1	PE1	D-v	151
Preempt In 2	PE2	D-w	152
Preempt In 3	PE3	D-x	153
Preempt In 4	PE4	D-y	154
n/u	n/u	--	155
Cont Voltage Mon	CVMS	--	156

Inputs Listed by Pin, C1/C11 Connectors Default Setting

Pin	Input Function		Code
C1-39	Veh Detector 9	VD9	101
C1-40	Veh Detector 19	VD19	113
C1-41	Veh Detector 14	VD14	106
C1-42	Veh Detector 24	VD24	118
C1-43	Veh Detector 10	VD10	102
C1-44	Veh Detector 20	VD20	114
C1-45	Veh Detector 15	VD15	107
C1-46	Veh Detector 25	VD25	161
C1-47	Veh Detector 13	VD13	105
C1-48	Veh Detector 23	VD23	117
C1-49	Veh Detector 18	VD18	112
C1-50	Veh Detector 28	VD28	164
C1-51	N/U		
C1-52	Preempt In 5	PE5	155
C1-53	Manual Control E	MCE	85
C1-54	N/U		
C1-55	Veh Detector 5	VD5	15
C1-56	Veh Detector 1	VD1	11
C1-57	Veh Detector 7	VD7	17
C1-58	Veh Detector 3	VD3	13
C1-59	Veh Detector 6	VD6	16
C1-60	Veh Detector 2	VD2	12
C1-61	Veh Detector 8	VD8	18

Pin	Input Function		Code
C1-62	Veh Detector 4	VD4	14
C1-63	Veh Detector 11	VD11	103
C1-64	Veh Detector 21	VD21	115
C1-65	Veh Detector 16	VD16	108
C1-66	Veh Detector 26	VD26	162
C1-67	Ped Detector 2	PED2	22
C1-68	Ped Detector 6	PED6	26
C1-69	Ped Detector 4	PED4	24
C1-70	Ped Detector 8	PED8	28
C1-71	Preempt In 1	PE1	151
C1-72	Preempt In 2	PE2	152
C1-73	Preempt In 3	PE3	153
C1-74	Preempt In 4	PE4	154
C1-75	N/U		
C1-76	Veh Detector 12	VD12	104
C1-77	Veh Detector 22	VD22	116
C1-78	Veh Detector 17	VD17	111
C1-79	Veh Detector 27	VD27	163
C1-80	Interval Advance	IADV	82
C1-81	Conf Mon Status	MON	137
C1-82	Stop Time	STP	62
(Other N/U input pins include C11-10 thru C11-13 and C11-15 thru C11-30)			

Inputs Listed by Function, C1/C11 Connectors Default Settings

Input Function		Pin	Code
Conf Mon Status	MONS	C1-81	137
Interval Advance	IADV	C1-80	82
Manual Control E	MCE	C1-53	85
Ped Detector 2	PED2	C1-67	22
Ped Detector 4	PED4	C1-68	24
Ped Detector 6	PED6	C1-69	26
Ped Detector 8	PED8	C1-70	28
Preempt In 5	PE5	C1-52	155
Preempt In 1	PE1	C1-71	151
Preempt In 2	PE2	C1-72	152
Preempt In 3	PE3	C1-73	153
Preempt In 4	PE4	C1-74	154
Stop Time	STP	C1-82	62
Veh Detector 1	VD1	C1-56	11
Veh Detector 2	VD2	C1-60	12
Veh Detector 3	VD3	C1-58	13
Veh Detector 4	VD4	C1-62	14
Veh Detector 5	VD5	C1-55	15
Veh Detector 6	VD6	C1-59	16
Veh Detector 7	VD7	C1-57	17
Veh Detector 8	VD8	C1-61	18
Veh Detector 9	VD9	C1-9	101

Input Function		Pin	Code
Veh Detector 10	VD10	C1-43	102
Veh Detector 11	VD11	C1-63	103
Veh Detector 12	VD12	C1-76	104
Veh Detector 13	VD13	C1-47	105
Veh Detector 14	VD14	C1-41	106
Veh Detector 15	VD15	C1-45	107
Veh Detector 16	VD16	C1-65	108
Veh Detector 17	VD17	C1-78	111
Veh Detector 18	VD18	C1-49	112
Veh Detector 19	VD19	C1-40	113
Veh Detector 20	VD20	C1-44	114
Veh Detector 21	VD21	C1-64	115
Veh Detector 22	VD22	C1-77	116
Veh Detector 23	VD23	C1-48	117
Veh Detector 24	VD24	C1-42	118
Veh Detector 25	VD25	C1-46	161
Veh Detector 26	VD26	C1-66	162
Veh Detector 27	VD27	C1-79	163
Veh Detector 28	VD28	C1-50	164
(N/U input pins include C1-51, C1-54, C1-75, C11-10 thru C11-13 and C11-15 thru C11-30)			

Relationship of Default Vehicle Detector Inputs to Input Files in 332 Cabinet

The first 28 vehicle detector inputs (out of 32 available detector inputs) are assigned to specific C1 pins when using the default programming in the WA03 software. The default programming assigns detector inputs to specific phases and detector functions. These assignments correspond to the standard organization of the input file in a Type 332 cabinet. The drawing below shows the front view of the input file organization.

		Slot								
		1	2	3	4	5	6	7	8	9
I	U	Ph 1 E, C C1-56 VD1	Ph 2 E, C C1-39 VD9	Ph 2 E, C C1-63 VD11	Ph 2 C C1-47 VD13	Ph 3 E,C C1-58 VD3	Ph 4 E, C C1-41 VD14	Ph 4 E, C C1-65 VD16	Ph 4 C C1-49 VD18	Ph 1 E, C C1-60 VD2
	L		Ph 2 E, C C1-43 VD10	Ph 2 E C1-76 VD12			Ph 4 E, C C1-45 VD15	Ph 4 E C1-78 VD17		Ph 3 E, C C1-62 VD4

		Slot								
		1	2	3	4	5	6	7	8	9
J	U	Ph 5 E, C C1-55 VD5	Ph 6 E, C C1-40 VD19	Ph 6 E, C C1-64 VD21	Ph 6 C C1-48 VD23	Ph 7 E,C C1-57 VD7	Ph 8 E, C C1-42 VD24	Ph 8 E, C C1-66 VD26	Ph 8 C C1-50 VD28	Ph 5 E, C C1-59 VD6
	L		Ph 6 E, C C1-44 VD20	Ph 6 E C1-77 VD22			Ph 8 E, C C1-46 VD25	Ph 8 E C1-79 VD27		Ph 7 E, C C1-61 VD8

E – Extend Phase C – Call Phase VD# – Vehicle Detector Input #

This information is available within the controller help screens. From any screen on the controller, type, **F** followed by **D** and a series of tables will display. To return to the previous screen, type **F**.

Auxiliary Inputs (Unassigned)

In the descriptions below, the symbol # is used to represent either a detector input number (1-32), a phase (1-8) or other values as needed.

These Auxiliary Inputs are not assigned by default to a connector pin. To enable one of these functions use I/O reassignment.

Input Function		Code
Preempt Input 5-8	PE#	155-158
Veh Detector 25-32	VD#	161-168
Coord Lines 1,2,4,8,16	CL#	171-175
Inhibit Transit Priority	ITP	178
Inh Short Timing 1-8	IST#	181-188

Input Function		Code
Clear Transit Call 1-8	CTPx	191-198
LRT Ped Inhibit	LRPI	199
LRT Check-in w/TTG 1-4	L#WD	200-203
LRT Check-in w/o TTG 1-4	L#ND	204-207
LRT Check-out 1-4	L#CO	208-211

External Input Descriptions

Vehicle Detectors 1-32

Vehicle Detector inputs place demand on associated vehicle phases, this is required if the controller is to operate in an actuated mode. A detection device, an inductive loop detector or a video detector, will ground the desired inputs when a vehicle is detected. External Vehicle Detection inputs can also come from controller cabinet test switches. The Voyage software allows the programmer to manipulate the external Vehicle Detector inputs using Memory On/Off, Delay, Stretch, Switch and other methods.

Stop Time

When activated, Stop Time causes the termination of controller unit timing for the duration of the actuation. When the input actuation is removed, all intervals previously timing will resume timing again. During Stop Timing, vehicle actuations on non-green phases will be recognized and vehicle actuations on green phases will reset the passage timer in the normal manner. The controller unit will not terminate any interval or select another phase, except by activation of the Interval Advance input. Operation of Interval Advance with Stop Time activated will clear any stored calls on a phase when the controller unit is advanced through the green interval of that phase.

Stop Time Ring 2

When activated, causes the controller to operate in manner similar to Stop Time, except that Stop Time is only applied to Ring 2. When the input is active Ring 2 will stop timing but Ring 1 will continue to move forward in its intervals till it reaches a barrier. Ring 1 will wait at the barrier until Ring 2 reaches the barrier via the release of the Stop Time Ring 2 input or via Internal Advance. At that point, if Stop Time Ring 2 is still active, another Internal Advance will move both rings past the barrier.

Pedestrian Detectors 1-8

Pedestrian Detector inputs place demand on associated pedestrian phases, this is required if the controller is to operate in a pedestrian-actuated mode. A pedestrian pushbutton is used to provide the grounded input. Pedestrian Detector inputs are always in the Memory On mode.

Inhibit Max Termination, Ring 1/2

The Inhibit Max Termination input prevents a max-out on all phases in use on a given ring. This input is often used in conjunction with coordinated operation to eliminate the possibility of phase termination by max-out prior to force-off.

Holds 1-8

When a Hold input is applied to a green phase, the phase will stay green until a force-off is applied. When in coordination, a Hold is generated for each coord phase.

Holds can be applied to non-coordinated phases while the controller is coordinated. A Hold can also be applied to any phase while the controller is running Free.

Red Rest, Ring 1/2

The Red Rest input allows phases to rest in the red interval (instead of resting in green) if there is no serviceable demand. When a call is received, the controller will immediately make a T∅N decision, then provide green service to meet the demand. Red Rest can be used in conjunction with the Red Revert function to ensure that the Red interval will time for the minimum amount.

Pedestrian Omits 1-8

A Pedestrian Omit input will prevent the associated ped phase from servicing a ped call, but will accept and store the call. If the input becomes active during the Walk or Don't Walk intervals of the phase, the intervals will time normally.

Pedestrian Recycle, Ring 1/2

The Pedestrian Recycle input allows a ped movement to be recycled when Hold is applied.

Vehicle Omits 1-8

A Vehicle Omit input will prevent the associated phase from being served. The vehicle omitted will not present a conflicting call to any other phase, but will accept and store calls. If the input becomes active after a T∅N decision and the controller is committed to servicing the phase, it will be served. If Vehicle Omit becomes active during the timing of an associated phase, it will not terminate or effect the timing of the phase.

Max II Select, Ring 1/2

The Max II Select input loads the Max timers with the Max II values associated with each phase. The Max II times take effect at the beginning of the next green interval following activation. Deactivating the input restores the Max I time settings.

Force-Off, Ring 1/2

The Force-Off input causes termination of the green interval and/or Walk-Hold (State B of a Coordinated Walk Rest phase) if there is a serviceable conflicting call. The Force-Off function is not effective during timing of Min Green, Walk or Pedestrian Clearance intervals. An automatic vehicle call is placed on the phase if it is terminated while the passage timer is still timing. The Force-Off input is only effective as long as the input is maintained.

Omit Red Clearance, Ring 1/2

The Omit Red Clearance input causes the phases in the associated ring to skip the Red Clearance interval, even though time has been programmed for Red Clearance.

External Start

When activated, the External Start input will cause the controller to immediately initiate the programmed initialization phases and interval. External Start must be deactivated to begin timing the initialization interval.

Interval Advance

A complete On/Off activation of the Interval Advance input will cause immediate termination of the interval currently timing. Concurrent interval timing will cause immediate termination of the interval terminating next without such actuation.

Phases without stored vehicle and pedestrian calls will be omitted from the phase sequencing of the controller unless External Minimum Recall or Manual Control Enable inputs are also activated. The controller will select the next phase to be serviced based on its normal control method. If Interval Advance is activated during the green interval and no serviceable call exists, the controller unit will not advance beyond the green Dwell/Select state, except when Red Rest is active. If Interval Advance is applied while the controller is displaying green and Walk indications, the unit will advance to the state of displaying green and pedestrian clearance. If Interval Advance is applied while the unit is displaying green and pedestrian clearance, the unit will display a steady Don’t Walk indication and advance to the green Dwell/Select state. Then, the unit will select a next phase and advance to the yellow interval

(subject to the presence of a serviceable conflicting call and the constraints of concurrent timing).

Interval Advance can be used in conjunction with Manual Control Enable to control the unit with timed vehicle change and clearance intervals. In addition if Auto Ped Clearance is enabled then the controller will not advance through the pedestrian clearance interval when Internal Advance is actuated during a pedestrian clearance interval.

Min Recall

Min Recall input places a call on all vehicle phases. The call is placed on each phase in the yellow interval and the call terminates when the green interval begins.

Video Fail

Many video processing units offer “fail” outputs that provide an indication when individual cameras are no longer providing reliable data. If these outputs are routed into Video Fail inputs in the controller, then, when active, alternative Fail Max times can be initiated. (See Video Fail and Max Plan programming).

Clock Reset

When activated then deactivated the Clock Reset input will immediately reset the internal time clock to the time entered in the database time clock section.

Manual Control Enable

The Manual Control Enable input modifies the operation of the Interval Advance function by placing vehicle and pedestrian calls on all phases, stopping timing in all intervals (except vehicle clearances) and inhibiting the operation of Interval Advance during vehicle clearances. **NOTE**: In order to ensure timing of Pedestrian Clearances, the Auto Ped Clearance function must be enabled, via program entry. Manual Control Enable is not to be used with Stop Time inputs activated.

When both Manual Control Enable and Interval Advance are activated, the controller will operate as follows:

> When pedestrian timing is not concurrent, one activation of Interval Advance will move the controller to the green Dwell/Select state. Then, the unit will make a T∅N decision and advance to the yellow interval.
>
> When pedestrian timing is concurrent, two sequential activations of Interval Advance will be required to advance through a green interval. The first activation will terminate the Walk interval and the second activation will terminate the green interval, including the pedestrian clearance interval.

The controller times all vehicle change and clearance intervals internally. Activation of Internal Advance during said intervals will have no effect on the controller unit.

Hardwire Control

Hardwire Control input will prevent Coordination Plans 1-32 from being activated by external, hardwire input. Once activated, the controller will use Time-of-Day (TOD) programming for Coord Plans activations.

Alarm 1-5

Alarm inputs can be activated for any user-defined purpose. When activated, an Alarm input can be logged into a Schedule Log (via program entry). The input can also effect the operation of the controller through a user-programmed Internal Logic sequence.

Flash-In

When activated, Flash-In input causes the controller to initiate flashing operation. The flash source programming under coordination modes must be programmed for hardwire (35).

Conflict Monitor Status

The Conflict Monitor Status input (MONS) is inactive under normal conditions, but becomes active when the conflict monitor is in conflict. This causes the controller to restart when the status input goes inactive.

Free Operation

Activation of Free Operation input forces the controller to operate in Free mode, regardless of other internal or external commands to be coordinated.

Door Open/Ajar

The Door Open/Ajar input is used to log incidents into one of the Schedule Logs. The Report Function Scheduling must be programmed to record the log entries.

Transit Priority Input 1-8

Transit priority inputs are used to initiate pre-programmed transit strategies. The Voyage software allows the programmer to manipulate the external transit priority inputs by using Memory On/Off, Delay, Minimum Re-service Time, Level of Priority

(1-8) and other methods. Separate transit priority inputs may not be necessary if an optical detection system is used that allows the transit input to piggyback on the preempt input. See the Transit Priority chapter for more information.

Preempt 1-8

Preempt inputs are used to initiate pre-programmed preemption sequences. The Voyage software allows the programmer to manipulate the external Preemption inputs by using Memory On/Off, Delay, Minimum Re-service Time, Level of Priority (1-8) and other various methods.

Coord Lines 1, 2, 4, 8, 16

If the controller is pre-programmed for Hardwire Coordination Mode, activating the proper group of Coord Line inputs will force the controller to operate in the desired coord plan. The controller must be programmed with a valid coordination plan which has the corresponding plan number.

Inhibit Transit Priority

Activation of this input will inhibit all transit priority service.

Inhibit Transit Short Timing, Phases 1-8

These inputs can prevent individual phases from being shortened during transit priority events.

Clear Transit Call 1-8

These inputs are used by “check out” detectors to terminate transit priority service. If check out detection doesn’t exist, it is possible to activate these inputs using an Internal Logic program.

Controller Voltage Monitor Status

This input is used internally by the controller.

External Outputs

External outputs are used to drive vehicle and pedestrian signal displays and to provide information to devices outside of the controller. External outputs are true when they are grounded. Available outputs with associated pin numbers and output code numbers are shown in the charts below.

There are several auxiliary outputs which do not have an associated pin number. To become operational, they must be assigned to an output pin. Through pin re-assignment, an auxiliary output can be assigned to a currently unused pin or a pin assigned to a different function. To assign/re-assign a pin program a new output code next to the pin designation, then restart the controller. The Voyage software will allow multiple outputs for the same function.

Outputs Listed by Function, A/B/C/D Connectors, Default Setting

Output Function		Pin	Code
Red, Ph 1	1RED	A-D	11
Red, Ph 2	2RED	A-F	12
Red, Ph 3	3RED	B-F	13
Red, Ph 4	4RED	B-G	14
Red, Ph 5	5RED	C-H	15
Red, Ph 6	6RED	C-G	16
Red, Ph 7	7RED	C-F	17
Red, Ph 8	8RED	C-D	18
Yellow, Ph 1	1YEL	A-Z	21
Yellow, Ph 2	2YEL	A-b	22
Yellow, Ph 3	3YEL	B-E	23
Yellow, Ph 4	4YEL	B-c	24
Yellow, Ph 5	5YEL	C-J	25
Yellow, Ph 6	6YEL	C-h	26
Yellow, Ph 7	7YEL	C-E	27
Yellow, Ph 8	8YEL	C-e	28
Green, Ph 1	1GRN	A-s	31
Green, Ph 2	2GRN	A-c	32
Green, Ph 3	3GRN	B-D	33
Green, Ph 4	4GRN	B-b	34
Green, Ph 5	5GRN	C-i	35
Green, Ph 6	6GRN	C-g	36
Green, Ph 7	7GRN	C-f	37
Green, Ph 8	8GRN	C-x	38
Don't Walk, Ph 1	1DWK	A-E	41
Don't Walk, Ph 2	2DWK	A-G	42
Don't Walk, Ph 3	3DWK	B-a	43
Don't Walk, Ph 4	4DWK	B-J	44
Don't Walk, Ph 5	5DWK	C-L	45
Don't Walk, Ph 6	6DWK	C-z	46
Don't Walk, Ph 7	7DWK	C-y	47
Don't Walk, Ph 8	8DWK	C-C	48
Ped Clear, Ph 1	1PCL	A-a	51
Ped Clear, Ph 2	2PCL	A-H	52
Ped Clear, Ph 3	3PCL	B-Z	53
Ped Clear, Ph 4	4PCL	B-H	54
Ped Clear, Ph 5	5PCL	C-K	55
Ped Clear, Ph 6	6PCL	C-AA	56

Output Function		Pin	Code
Check, Ph 5	5CHK	C-k	75
Check, Ph 6	6CHK	C-BB	76
Check, Ph 7	7CHK	C-MM	77
Check, Ph 8	8CHK	C-FF	78
Next, Ph 1	1NXT	B-A	81
Next, Ph 2	2NXT	B-C	82
Next, Ph 3	3NXT	B-t	83
Next, Ph 4	4NXT	B-f	84
Next, Ph 5	5NXT	C-M	85
Next, Ph 6	6NXT	C-DD	86
Next, Ph 7	7NXT	C-PP	87
Next, Ph 8	8NXT	C-HH	88
On, Ph 1	1ON	A-DD	91
On, Ph 2	2ON	A-e	92
On, Ph 3	3ON	B-s	93
On, Ph 4	4ON	B-e	94
On, Ph 5	5ON	C-N	95
On, Ph 6	6ON	C-CC	96
On, Ph 7	7ON	C-NN	97
On, Ph 8	8ON	C-GG	98
Overlap A, Green	OLAG	B-AA	101
Overlap A, Yellow	OLAY	B-p	102
Overlap A, Red	OLAR	B-q	103
Overlap B, Green	OLBG	B-GG	104
Overlap B, Yellow	OLBY	B-BB	105
Overlap B, Red	OLBR	B-CC	106
Overlap C, Green	OLCG	B-FF	111
Overlap C, Yellow	OLCY	B-HH	112
Overlap C, Red	OLCR	B-DD	113
Overlap D, Green	OLDG	B-w	114
Overlap D, Yellow	OLDY	B-EE	115
Overlap D, Red	OLDR	B-u	116
Flash Logic Out	FLO	A-X	117
Status Bit A R1	SBA1	A-CC	121
Status Bit B R1	SBB1	A-r	122
Status Bit C R1	SBC1	A-Y	123
Status Bit A R2	SBA2	C-A	124
Status Bit B R2	SBB2	C-B	125

Ped Clear, Ph 7	7PCL	C-KK	57
Ped Clear, Ph 8	8PCL	C-w	58
Walk, Ph 1	1WLK	A-t	61
Walk, Ph 2	2WLK	A-j	62
Walk, Ph 3	3WLK	B-Y	63
Walk, Ph 4	4WLK	B-d	64
Walk, Ph 5	5WLK	C-j	65
Walk, Ph 6	6WLK	C-LL	66
Walk, Ph 7	7WLK	C-JJ	67
Walk, Ph 8	8WLK	C-d	68
Check, Ph 1	1CHK	A-u	71
Check, Ph 2	2CHK	A-d	72
Check, Ph 3	3CHK	B-r	73
Check, Ph 4	4CHK	B-K	74

Status Bit C R2	SBC2	C-c	126
TOD Output 1	TO1	D-BB	131
TOD Output 2	TO2	D-CC	132
TOD Output 3	TO3	D-DD	133
TOD Output 4	TO4	D-EE	134
TOD Output 5	TO5	D-FF	135
TOD Output 6	TO6	D-GG	136
TOD Output 7	TO7	D-HH	137
TOD Output 8	TO8	D-JJ	138

Outputs Listed by Pin, C1/C11 Connectors (Default Setting)

Pin	Output Function		Code
C1-2	Don't Walk, Ph 4	4DWK	44
C1-3	Walk, Ph 4	4WLK	64
C1-4	Red, Ph 4	4RED	14
C1-5	Yellow, Ph 4	4YEL	24
C1-6	Green, Ph 4	4GRN	34
C1-7	Red, Ph 3	3RED	13
C1-8	Yellow, Ph 3	3YEL	23
C1-9	Green, Ph 3	3GRN	33
C1-10	Don't Walk, Ph 2	2DWK	42
C1-11	Walk, Ph 2	2WLK	62
C1-12	Red, Ph 2	2RED	12
C1-13	Yellow, Ph 2	2YEL	22
C1-15	Green, Ph 2	2GRN	32
C1-16	Red, Ph 1	1RED	11
C1-17	Yellow, Ph 1	1YEL	21
C1-18	Green, Ph 1	1GRN	31
C1-19	Don't Walk, Ph 8	8DWK	48
C1-20	Walk, Ph 8	8WLK	68
C1-21	Red, Ph 8	8RED	18
C1-22	Yellow, Ph 8	8YEL	28
C1-23	Green, Ph 8	8GRN	38
C1-24	Red, Ph 7	7RED	17
C1-25	Yellow, Ph 7	7YEL	27
C1-26	Green, Ph 7	7GRN	37
C1-27	Don't Walk, Ph 6	6DWK	46
C1-28	Walk, Ph 6	6WLK	66
C1-29	Red, Ph 6	6RED	16
C1-30	Yellow, Ph 6	6YEL	26
C1-31	Green, Ph 6	6GRN	36

Pin	Output Function		Code
C1-32	Red, Ph 5	5RED	15
C1-33	Yellow, Ph 5	5YEL	25
C1-34	Green, Ph 5	5GRN	35
C1-35	TOD Output 1	TO1	131
C1-36	TOD Output 2	TO2	132
C1-37	TOD Output 3	TO3	133
C1-38	TOD Output 4	TO4	134
C1-100	Ped Clear, Ph 3	3PCL	53
C1-101	Ped Clear, Ph 1	1PCL	51
C1-102	Soft Flash	SFL	187
C1-103	Watchdog	WDO	147
C1-83	Don't Walk, Ph 3	3DWK	43
C1-84	Walk, Ph 3	3WLK	63
C1-85	Overlap D, Red	OLDR	116
C1-86	Overlap D, Yellow	OLDY	115
C1-87	Overlap D, Green	OLDG	114
C1-88	Overlap C, Red	OLCR	113
C1-89	Overlap C, Yellow	OLCY	112
C1-90	Overlap C, Green	OLCG	111
C1-91	Don't Walk, Ph 1	1DWK	41
C1-93	Walk, Ph 1	1WLK	61
C1-94	Overlap B, Red	OLBR	106
C1-95	Overlap B, Yellow	OLBY	105
C1-96	Overlap B, Green	OLBG	104
C1-97	Overlap A, Red	OLAR	103
C1-98	Overlap A, Yellow	OLAY	102
C1-99	Overlap A, Green	OLAG	101
(N/U Output pins include C11-1 thru C11-8)			

Outputs Listed by Function, C1/C11 Connectors (Default Setting)

Output Function		Pin	Code
Don't Walk, Ph 1	1DWK	C1-91	41
Don't Walk, Ph 2	2DWK	C1-10	42
Don't Walk, Ph 3	3DWK	C1-83	43
Don't Walk, Ph 4	4DWK	C1-2	44
Don't Walk, Ph 6	6DWK	C1-27	46
Don't Walk, Ph 8	8DWK	C1-19	48
Green, Ph 1	1GRN	C1-18	31
Green, Ph 2	2GRN	C1-15	32
Green, Ph 3	3GRN	C1-9	33
Green, Ph 4	4GRN	C1-6	34
Green, Ph 5	5GRN	C1-34	35
Green, Ph 6	6GRN	C1-31	36
Green, Ph 7	7GRN	C1-26	37
Green, Ph 8	8GRN	C1-23	38
Overlap A, Green	OLAG	C1-99	101
Overlap A, Yellow	OLAY	C1-98	102
Overlap A, Red	OLAR	C1-97	103
Overlap B, Green	OLBG	C1-96	104
Overlap B, Yellow	OLBY	C1-95	105
Overlap B, Red	OLBR	C1-94	106
Overlap C, Green	OLCG	C1-90	111
Overlap C, Yellow	OLCY	C1-89	112
Overlap C, Red	OLCR	C1-88	113
Overlap D, Green	OLDG	C1-87	114
Overlap D, Yellow	OLDY	C1-86	115
Overlap D, Red	OLDR	C1-85	116
Ped Clear, Ph 1	1PCL	C1-101	51
Ped Clear, Ph 3	3PCL	C1-100	53

Output Function		Pin	Code
Red, Ph 1	1RED	C1-16	11
Red, Ph 2	2RED	C1-12	12
Red, Ph 3	3RED	C1-7	13
Red, Ph 4	4RED	C1-4	14
Red, Ph 5	5RED	C1-32	15
Red, Ph 6	6RED	C1-29	16
Red, Ph 7	7RED	C1-24	17
Red, Ph 8	8RED	C1-21	18
Soft Flash	SFL	C1-102	187
TOD Output 1	TO1	C1-35	131
TOD Output 2	TO2	C1-36	132
TOD Output 3	TO3	C1-37	133
TOD Output 4	TO4	C1-38	134
Walk, Ph 1	1WLK	C1-93	61
Walk, Ph 2	2WLK	C1-11	62
Walk, Ph 3	3WLK	C1-84	63
Walk, Ph 4	4WLK	C1-3	64
Walk, Ph 6	6WLK	C1-28	66
Walk, Ph 8	8WLK	C1-20	68
Watchdog	WDO	C1-103	147
Yellow, Ph 1	1YEL	C1-17	21
Yellow, Ph 2	2YEL	C1-13	22
Yellow, Ph 3	3YEL	C1-8	23
Yellow, Ph 4	4YEL	C1-5	24
Yellow, Ph 5	5YEL	C1-33	25
Yellow, Ph 6	6YEL	C1-30	26
Yellow, Ph 7	7YEL	C1-25	27
Yellow, Ph 8	8YEL	C1-22	28
(N/U Output pins include C11-1 thru C11-8)			

Auxiliary Outputs (Unassigned)

In the descriptions below, the symbol # is used to represent either a phase number (1-8), an overlap interval (G, Y or R) or other values as needed.

A normally unused output can be assigned to an active output of a load switch via I/O reassignment.

Output Function		Code
Overlap E, G/Y/R	OLE#	141-143
Overlap F, G/Y/R	OLF#	144-146
Watchdog	WDO	147
Overlap G, G/Y/R	OLG#	151-153
Overlap H, G/Y/R	OLH#	154-156
LRT H-Bar 1-4	LT#H	157-160
Overlap I, G/Y/R	OLI#	161-163
Overlap J, G/Y/R	OLJ#	164-166
LRT V-Bar 1-4	LT#V	167-170
Overlap K, G/Y/R	OLK#	171-173
Overlap L, G/Y/R	OLL#	174-176

Output Function		Code
LRT Adv Logic 1-4	LT#A	177-180
Coord Lines 1,2,4,8,16	CL#	181-185
Soft Flash	SFO	187
Preempt Output 1-8	PE#	191-198
Internal Logic Out 1-8	IL#	201-208
Internal Logic Flash Output 9-12	IL#	211-214
FYLTA 1, 3, 5, 7	FYA#	215-218
FYLTA CLR 1, 3, 5, 7	FYC#	221-224
Don't Walk Ped Overlap A-H	PO#D	231-238
Walk Ped Overlap A-H	PO#W	241-248

External Output Descriptions

Phase 1-8 Red

Outputs which drive vehicle signal load switch circuits resulting in red indications for the duration of the output.

Phase 1-8 Check

Outputs which indicate call status (vehicle and/or pedestrian) for a phase and is activated by demand on the phase. The Phase Check output is not effected by omits.

Phase 1-8 Yellow

Outputs which drive vehicle signal load switch circuits resulting in yellow indications for the duration of the output.

Phase 1-8 Next

A Phase Next output, associated with a particular phase, is activated by the phase becoming next in sequence and remains active until the phase becomes active. The T∅N decision is made at the end of the green interval of the terminating phase. If the decision cannot be made at the end of the green interval (as is the case with Red Rest), it will not be made until after the end of all vehicle change and clearance intervals.

Phase 1-8 Green

Outputs which drive vehicle signal load switch circuits resulting in green indications for the duration of the output.

Phase 1-8 On

A Phase-On output indicates the status of a particular phase. The Phase-On output is activated during the green, yellow change and red clearance intervals.

Phase 1-8 Don't Walk

Outputs which drive pedestrian signal load switch circuits resulting in Don’t Walk indications for the duration of the output.

Overlaps A-L G/Y/R

Outputs which drive signal load switch circuits resulting in overlap green/yellow/red indications for the duration of the output.

Phase 1-8 Pedestrian Clearance

These outputs are not normally used. During the pedestrian clearance interval of a phase the respective Pedestrian Clearance output is on solid. Also during this interval the Don't Walk output of the respective phase is flashing. The Don't Walk output is the output that is connected to the load switch that energizes the pedestrian signal Don't Walk lens.

Phase 1-8 Walk

Outputs which drive pedestrian signal load switch circuits resulting in Walk indications for the duration of the output.

Flashing Logic

An alternating true/false logic output which oscillates @ 60 Hz.

Time of Day (TOD Output 1-8)

Outputs activated by the Time-of-Day (TOD) clock which are used for any purpose.

Coded Status Bits A/B/C (Ring ½)

Outputs which provide information about the status of the phase intervals in each ring. There are three coded bit outputs for each ring, for a total of six outputs. The first four codes (0-3) have different meanings depending on whether the controller is operating in a Coordinated Walk Rest mode or an actuated mode. The codes conform to the following structure:

Code	Bit A	Bit B	Bit C
0	+24	+24	+24
1	0	+24	+24
2	+24	0	+24
3	0	0	+24
4	+24	+24	0
5	0	+24	0
6	+24	0	0
7	0	0	0

If the controller is operating in CWR mode and is in a green interval, the codes will have the following meanings:

Code 0: Walk Timing – State A

Code 1: Walk Hold – State B

Code 2: Pedestrian Clearance Timing – State C

Code 3: Green Rest – State D

If the controller is operating in actuated mode and is in a green interval, the codes will have the following meanings:

Code 0: Minimum Timing – When timing the Initial, Walk or Pedestrian Clearance portions of the green interval.

Code 1: Extension Timing – The part of the green interval after the minimum timings (Initial, Walk, and Pedestrian Clearance) when timing an extension.

Code 2: Maximum Timing – The portion of the green interval following the minimum timings (Initial, Walk, and Pedestrian Clearance) when not timing an extension and Max Green is timing (Hold is applied).

Code 3: Green Rest – The portion of the green interval following the minimum timings (Initial, Walk, and Pedestrian Clearance) when the Passage timer is timed-out and the Max Green timer is either timed-out or has not yet started.

If the controller unit is operating in either the CWR mode or the actuated mode and is not in a green interval, the codes will have the following meanings:

Code 4: Yellow Change

Code 5: Red Clearance

Code 6: Red Rest

Code 7: Undefined

Watchdog

The Watchdog output cycles at a rate of 5 Hz. The output will stop cycling if there is a problem with the controller's CPU.

Coordination Lines 1, 2, 4, 8, 16

Outputs which indicate the current coordination plan in operation. The active coord plan is determined by totaling the plan numbers associated with the true outputs and adding **1**, as follows:

Coord Plan	Active CP Outputs	Coord Plan	Active CP Outputs	Coord Plan	Active CP Outputs	Coord Plan	Active CP Outputs
1	None	9	8	17	16	25	8, 16
2	1	10	1, 8	18	1, 16	26	1,8,16
3	2	11	2, 8	19	2, 16	27	2,8,16
4	1, 2	12	1, 2, 8	20	1,2,16	28	1,2,8,16
5	4	13	4, 8	21	4, 16	29	4,8,16
6	1, 4	14	1, 4, 8	22	1,4,16	30	1,4,8,16
7	2, 4	15	2, 4, 8	23	2,4,16	31	2,4,8,16
8	1, 2, 4	16	1,2,4,8	24	1,2,4,16	32	1,2,4,8,16

Internal Logic 1-12

Outputs activated by an Internal Logic programming sequence which are used for any purpose. Internal Logic output circuits 9-12 flash at a rate of 1 Hz.

Soft Flash

The Soft Flash output is inactive during normal controller operation and becomes active when flashing operation is desired.

Pedestrian Overlap A-H Don't Walk

Outputs which drive Pedestrian Overlap signal load switch circuits resulting in Don’t Walk indications for the duration of the output.

Preempt Out 1-8

Outputs associated with Preemption sequences which are manipulated via preemption programming. These outputs can be used to drive devices (PE indicator lights, signs or signals) associated with Preemption.

Pedestrian Overlap A-H Walk

Outputs which drive Pedestrian Overlap signal load switch circuits resulting in Walk indications for the duration of the output.

LRT Horizontal Bar 1-4

Outputs which drive signal load switch circuits resulting in LRT Horizontal Bar indications for the duration of the output.

LRT Vertical Bar 1-4

Outputs which drive signal load switch circuits resulting in LRT Vertical Bar indications for the duration of the output.

LRT Advance Warning 1-4

Outputs which drive signal load switch circuits resulting in LRT Advance Warning indications for the duration of the output.

FYLTA, Flashing Yellow Left Turn 1,3,5,7

Outputs which drive signal load switch circuits resulting in Flashing Yellow Left Turn indications for the duration of the output.

FYLTA, Flashing Yellow Clearance 1,3,5,7

Outputs which drive signal load switch circuits resulting in Flashing Yellow Clearance indications for the duration of the output. Typically used with a 5-section head deployment of the FYLTA.

Input/Output Configuration Programming Screens

To make changes to Controller programming, bring up the MAIN MENU display by pressing the **NEXT** key.

```
                --MAIN MENU--

     1.RUN MODE          3. UTILITIES

     2.PROGRAM MODE      4. TS2 PORT 1 STATUS

        -- AUX Switch ON = Stop Time --
           --USE F KEY FOR HELP--
```

Select 2. **PROGRAM MODE**

```
            --PROGRAM MODE MENU--

1.SECURITY CODE  5.PREEMPTION     8.I/O
2.CONTROLLER     6.COMM/REPORT      CONFIG
3.COORDINATION   7. TRANSIT       9.INTERNAL
4.TIME CLOCK        PRIORITY        LOGIC
                                  0.SYSTEM
```

Note: The selection “0.System” is only displayed if the controller has been programmed to operate in system mode 2. See the chapter on Communications and Reports.

Select 8. **I/O CONFIGURATION**

```
      I/O CONFIGURE PROGRAMMING MENU

         1. INPUTS
         2. OUTPUTS
         3. INPUT/OUTPUT OPTIONS
         4. TS2 PORT 1 OPTIONS
```

TS2 Port 1 refers to the high speed, full duplex, data channel that is used to connect the CU (controller unit) to the MMU (malfunction management unit) and the BIU’s (bus interface units) in the TF (terminals and facilities, i.e. back panel) and the detector rack. TS2 Port 1 is a 15 pin, metal shell, sub-miniature type connector that is located on the 2070-2N Field I/O Module. It uses an EIA-485 serial communications interface with noise immunity characteristics. TS2 Port 1 operates with an SDLC (synchronous data link) communication protocol with a bit rate of 153,600 bits/second, utilizing sophisticated error checking.

The I/O Configuration Programming Menu is used to re-assign inputs and outputs, enable automatic I/O changes, enable the MMU and BIU’s, and assign MMU channels. **Any programming changes in this area, except for use of the Auto I/O Change feature, will require a restart of the controller to take effect.**

Select 1: **INPUTS**

```
BIU 1  INPUTS-PGDN/UP FOR MORE-  PORT 1
IO1   IO2   IO3   IO4   IO5   IO6   IO7   IO8
PE1   PE2  TSTA TSTB  SFL   N/U   MCE  IADV
151   152   91    92   136   254   85    82

IO22 IO23 IO24  I1    I2    I3    I4    I5
MIN  EST  N/U  ST1   ST2  MX21 MX22  FO1
84   81   254   62    72    66    76    61
```

If BIU's are enabled on the TS2 Port 1 Options screen, the input programming screen will look like the one above. If no BIU's are enabled, the controller will be set to function in a TS1 environment using the MSA-MSD or C1/C11 connectors. The input and output programming screens will look like those shown under "TS1 I/O Using the MSA-MSD Connectors"**.**

There are 11 unique input mapping screens that display the input assignments for BIU's 1-4 and 9-12. Use the page down key (A) to successively view each input screen.

The first row in input mapping, beneath the title row, identifies the input pin designation. If the designation begins with the letters "IO" that indicates that the pin may be either an input or an output, depending upon the BIU number. If the designation begins with just an "I" then the pin must be an input. If the designation begins with an "OI" then the pin is optically isolated and must be used for an input function, usually a pedestrian detector. The second row displays a three or four letter functional designation. To decode the designation, press the help key (F) and then page down key (A) repeatedly, until the function is displayed. The third row on the input mapping screen shows the code number for the function. It too can be cross referenced in the help screens.

To change an input assignment, move the cursor until it is located just to the right of the code number for the pin in question. Use the number keys to edit the pin designation and press the enter key (E) or an arrow key. Again, a restart of the controller is needed to activate any I/O changes.

Press the **ESC** key to return to the I/O Configuration Programming Menu. Select 2 to view **OUTPUTS**.

```
BIU 1  OUTPUTS-PGDN/UP FOR MORE-  PORT 1
 O1    O2    O3    O4    O5    O6    O7    O8
1RED  1YEL  1GRN  2RED  2YEL  2GRN  3RED  3YEL
 11    21    31    12    22    32    13    23

 O9   O10   O11   O12   O13   O14   O15   IO1
3GRN  4RED  4YEL  4GRN  5RED  5YEL  5GRN  6RED
 33    14    24    34    15    25    35    16
```

There are eight unique output mapping screens that display the output assignments for BIU's 1-4. Use the page down key (A) to successively view each output screen.

The first row in output mapping, beneath the title row, identifies the output pin designation. If the designation begins with the letters “IO” that indicates that the pin may be either an input or an output, depending on the BIU number. If the designation begins with just an “O” then the pin must be an output. The second row displays a three or four letter functional designation. To decode the designation, press the help key (F) and then page down key (A) repeatedly, until the function is displayed. The third row on the output mapping screen shows the code number for the function. It too can be cross referenced in the help screens.

To change an output assignment, move the cursor until it is located just to the right of the code number for the pin in question. Use the number keys to edit the pin designation and press the enter key (E) or an arrow key. Again, a restart of the controller is needed to activate any I/O changes.

Press the **ESC** key to return to the I/O Configuration Programming Menu. Select 3 to view the **INPUT/OUTPUT OPTIONS**.

```
-- INPUT/OUTPUT  OPTIONS --
CONNECTOR TYPE:   0  (0= C1/C11,
                1= MS-A/B/C/D, 2= TS2 PORT 1)
        CHANGE I/O:  0  (0 = DISABLED,
                         1 = ENABLED)
      If Using CHANGE I/O, read WARNING.
WARNING:  MAKE CHANGES,  VERIFY CHANGES
          LOAD CHANGE I/O ENABLE
```

Connector Type: This feature allows the user to select the primary I/O type for the controller, either C1/C11, MS-A/B/C/D (TS1) or TS2 Port 1.

CHANGE I/O: This feature allows I/O changes to be implemented *without restarting* the controller. <u>It is not necessary to use this feature in cases where it is convenient to restart the controller after making an I/O change.</u> Change I/O can be used when changing the I/O programming through the keyboard, or through a download from NWSCentral. When programming through the keyboard, first make the desired I/O changes, verify the changes, and then enable the Change I/O feature. The changes will occur immediately. When making an I/O programming change via download from NWSCentral, first make the desired I/O changes, verify the changes, enable the Change I/O feature, and then send the data set from NWSCentral to the controller. The changes will occur immediately. It is recommended that Change I/O be reset to “0” after use.

Press the **ESC** key to return to the TS2 Port 1 Configuration Programming Menu. Select 4 to view the **TS2 PORT 1 OPTIONS**.

```
TS2 PORT 1 OPTIONS                    X = ENABLED
     BIU's  1  2  3  4  9  10 11 12  CURSOR
 ENABLED    X  X        X                <
                        MMU ENABLE:  1
 (0= Disable,  1= Enable,  2= Compatibility
                              Checks Disabled)

    --PGDN (A) FOR MMU CHANNEL ASSIGN --
```

Page down (A) to view the **MMU CHANNEL ASSIGNMENTS**.

```
        -- MMU CHANNEL ASSIGNMENTS --
 CHANNELS 1    2    3    4    5    6    7    8
          VP1  VP2  VP3  VP4  VP5  VP6  VP7  VP8
           1    2    3    4    5    6    7    8

 CHANNELS 9    10   11   12   13   14   15   16
          PP2  PP4  PP6  PP8  N/U  N/U  N/U  N/U
           10   12   14   16   0    0    0    0
```

The MMU Channel Assignments screen is used to associate a particular vehicle phase, pedestrian phase, vehicle overlap, or pedestrian overlap with each channel in the MMU. If the MMU is enabled and compatibility checks are being used, the programming on this screen is checked against the response frames from the MMU to ensure compatibility. Any incompatibilities will throw the controller into flashing operation.

The first row on the MMU Channel Assignments screen, beneath the title row, identifies the channel number. The second row displays a three digit functional designation. To decode the designation, press the help key (F). The third row on the output mapping screen shows the code number for the function. The codes are cross referenced as follows:

0 = Channel Not Used
1-8 = Vehicle Phase 1-8
9-16 = Pedestrian Phase 1-8
17-28 = Vehicle Overlap A-L
29-36 = Pedestrian Overlap A-H

TS1 I/O Using the MSA-MSD or C1/C11 Connectors

Select 1. **INPUTS** or 2. **OUTPUTS**

```
INPUT CONFIG-PGDN/UP FOR MORE          MSA-D
 A-f   A-K   B-N   B-L   C-P   C-S   C-V   C-t
VD1   VD2   VD3   VD4   VD5   VD6   VD7   VD8
 11    12    13    14    15    16    17    18

 A-g   A-L   B-P   B-M   C-R   C-T   C-U   C-W
PED1  PED2  PED3  PED4  PED5  PED6  PED7  PED8
 21    22    23    24    25    26    27    28
```

```
OUTPUT CONFIG-PGDN/UP FOR MORE         MSA-D
 A-D   A-F   B-F   B-G   C-H   C-G   C-F   C-D
1RED  2RED  3RED  4RED  5RED  6RED  7RED  8RED
 11    12    13    14    15    16    17    18

 A-Z   A-B   B-E   B-c   C-J   C-h   C-E   C-E
1YEL  2YEL  3YEL  4YEL  5YEL  6YEL  7YEL  8YEL
 21    22    23    24    25    26    27    28
```

The appearance of the Input and Output programming screens will depend upon whether the I/O is set to TS1 or TS2. The screens above are obviously associated with TS1, since the MSA-MSD connectors are referenced.

To change to a new I/O function on a particular pin assignment, page down (**A**) to the screen which contains the necessary pin. Then, using the arrow keys, move the cursor to the appropriate location on the screen. Use the number keys for setting the function required. Use the **E** key or the arrow keys to enter data. To cancel a database entry change before entering the new data, use the **C** key to restore the previous database value.

The codes for changing the I/O assignments are listed in the input and output configuration tables. The codes are also on the help screen (use the **F** key to access help, **A** to page down and **B** to page up).

The controller must go through a re-initialization to reconfigure the I/O such as, cycling power off/on, keyboard restart, external start, monitor status, or flash exit. Alternatively, the I/O can be reconfigured using the Change I/O feature under INPUT/OUTPUT OPTIONS.

.

Internal Logic

Internal Logic is a powerful set of programming tools which allow the user to manipulate the controller's inputs, outputs and operation. It also allows a controller to share data with other controllers, system wide, through the use of virtual relays. Internal Logic provides powerful, customizable functionality to solve unique problems. **NOTE:** If an Internal Logic program is used at multiple intersections regularly, the programming function can be added to the basic controller programming package.

Internal Logic programming must be used with care. The user assumes full responsibility for Internal Logic programming. Any programming must be tested thoroughly to prove that it functions as intended under all conditions. The following are some things which should be considered:

- How does the program perform during Free and Coordinated operation?
- How does the program perform during Preemption?
- What are the consequences if it malfunctions?

There are 256 programming steps in the Internal Logic package. There are 23 different **Commands** and 17 different **Test Conditions** available to modify the Commands. Some Test Conditions rely on information about the **Phase Condition** (there are 10 different Phase Condition codes). The Commands, Test Conditions, Phase Conditions and Input/Output Codes are tabularized in this chapter.

Internal Logic is a linear processor which begins operation when the controller is powered up and runs constantly until the controller is powered down. It begins at step 1 and continues until it reaches a step with a value of zero, it then returns to step 1 and begins again. Each logic package is a linear group of steps which accomplishes a user intended function. Examples of logic packages are shown later in this chapter. A logic package is composed of one or more sub-modules. A sub-module begins with one of 23 commands and continues with the parameters and test codes which make up the command structure associated with the chosen command. In rare instances, a sub-module can have more than one command if an intersection has more than one logic package. For example, if a program has two logic packages, the 1st with 28 steps, and the 2nd with 39 steps, then logic package #1 will begin at step 1 and logic package #2 will begin at step 29. The last step in logic package #2 will be step 67. The value of step #68 will be zero which will send the operation back to step 1.

Commands

Command	Definition	Command Structure
201	Causes a 2nd **input** to be true if a 1st input is true.	201 – Command xxx – Input Code, 1st Input xxx – Input Code, 2nd Input
202	Causes an **input** to be true if a phase is in a particular condition.	202 – Command x – Phase (1-8) xx – Phase Condition xxx – Input Code
203	Causes an **input** to be true if an output is true.	203 – Command xxx – Output Code xxx – Input Code
204	**Invert** the current state of an **output** when a chosen phase is in a particular condition.	204 – Command x – Phase (1-8) xx – Phase Condition xxx – Output Code
205	**Turn on** an **output** when a string of one or more tests are met. **NOTE**: There are 12 special Internal Logic outputs available for use, in addition to all the standard outputs.	205 – Command xxx – Activated Output xx – Test Condition xx – Test Parameters 20 or 40 – Add Additional Test (If needed)
206	**Turn on** an **input** when a string of one or more tests are met.	205 – Command xxx – Activated Input xx – Test Condition xx – Test Parameters 20 or 40 – Add Another Test (If needed)
207	**No Operation**. This is a space holder which is used instead of a blank or zero between commands. Internal Logic programs will not execute past a blank or zero entry. ***Important Note:*** *A 207 can be inserted into the middle of an existing program by placing the cursor on the desired step and pressing the "+" key. All following steps are shifted automatically. Likewise, the "-" key will remove a 207 command.*	

Command	Definition	Command Structure
208	**Load** one of eight **timers** when a string of one or more tests are met. When the string of tests is not met, begin decrementing the timer. **NOTE**: The first four timers run in decimal seconds (0.1 – 25.5 seconds) and the second four timers run in whole seconds (1 – 255 seconds).	208 – Command x – Timer # (1 – 8) xxx – Timer Value xx – Test Condition xx – Test Parameters 20 or 40 – Add Additional Test (If needed)
209	**Set** 1 of 8 **latches** true when a string of one or more tests are met.	209 – Command x – Latch # (1 – 8) xx – Test Condition xx – Test Parameters 20 or 40 – Add Additional Test (If needed)
210	**Release** one of eight **latches** (if the latch is already set) when a string of one or more tests are met. Using Latch code 9 will release all eight latches.	210 – Command x – Latch # (1 – 8, 9) xx – Test Condition xx – Test Parameters 20 or 40 – Add Additional Test (If needed)
211	**Omit** a phase from demand register when a string of one or more tests are met. Phase will run if the Phase Next is true when the omit is activated.	211 – Command x – Phase (1 – 8) xx – Test Condition xx – Test Parameters 20 or 40 – Add Additional Test (If needed))
212	Place a **Hold** on a phase when a string of one or more tests are met.	212 – Command x – Phase (1 – 8) xx – Test Condition xx – Test Parameters 20 or 40 – Add Additional Test (If needed)
213	**Force-Off** a phase when a string of one or more tests are met.	213 – Command x – Phase (1 – 8) xx – Test Condition xx – Test Parameters 20 or 40 – Add Additional Test (If needed)

Command	Definition	Command Structure
214	**Activate** a **coordination plan** (1-32) when a string of one or more tests are met. This will override all other coord plan selection modes except for manual override.	214 – Command x – Plan Number xx – Test Condition xx – Test Parameters 20 or 40 – Add Additional Test (If needed)
215	**Activate** a **TOD circuit** (ckt 1-255) when a string of one or more tests are met. This will override all other circuit activation modes, except manual override.	215 – Command x – TOD Circuit xx – Test Condition xx – Test Parameters 20 or 40 – Add Additional Test (If needed)
216	**Increment** 1 of 8 **counters** when 1 or more tests are met.	216 – Command x – Counter # (1-8) xx – Test Condition xx – Test Parameters 20 or 40 – Add Additional Test (If needed)
217	**Load** 1 of 8 **counters** when 1 or more tests are met (range 0-255). Using counter code 9 will load all 8 counters.	216 – Command x – Counter # (1-8, 9) xxx – Counter Value xx – Test Condition xx – Test Parameters 20 or 40 – Add Additional Test (If needed)
218	**Jump** forward from this step to step 'n' when 1 or more tests are met. Step 'n' must be greater than current step.	218 – Command x – Step # (2-256) xx – Test Condition xx – Test Parameters 20 or 40 – Add Additional Test (If needed)
219	**Stop here on flash**. Will check for controller flashing operation and, if true, stop the execution of the Internal Logic program. Functions which might have been turned on by commands beyond the 219 command will remain off.	

Command	Definition	Command Structure
220	**Deactivate** an **input** when a string of one or more tests are met.	220 – Command xxx – Deactivated Input xx – Test Condition xx – Test Parameters 20 or 40 – Add Additional Test (If needed)
221	**Deactivate** an **output** when a string of one or more tests are met.	221 – Command xxx – Deactivated Output xx – Test Condition xx – Test Parameters 20 or 40 – Add Additional Test (If needed)
222	**Deactivate** a **TOD circuit** (ckt 1-255) when a string of one or more tests are met. This will override all other circuit activation modes, except manual override.	222 – Command x – TOD Circuit xx – Test Condition xx – Test Parameters 20 or 40 – Add Additional Test (If needed)
223	**Set** 1 of 8 local **relays** true when a string of one or more tests are met.	223 – Command x – Relay # (1 – 8) xx – Test Condition xx – Test Parameters 20 or 40 – Add Additional Test (If needed)

Test Conditions

Test Condition	Name	Description
20	AND	Use the 20 Test Condition to add another test. All ANDs must be true for the function to be true. ANDs can be combined with ORs as described in Test Condition 40 (OR).
21	Phase Condition Test	Must be followed with two values. The first value is the phase to test. The second value is the phase's condition. For example: 21 – Test Condition x – Phase (1 – 8) xx – Phase Condition
22	Input Test	Follow the 22 Test Condition with an input code.
23	Output Test	Follow the 23 Test Condition with an output code.
24	NOT	Will cause the result of the next test to be inverted. Follow with one of the codes 21-23 or 25-34.
25	Active Coord Plan Test	The value of the active coord plan (1-32, 33) will be tested against the number which follows the 25 Test Condition. A value of 33 will test for any coord plan being active.
26	Latch Set Test	Follow the 26 Test Condition with a latch number, ranging from 1-8. This operation will test true if the latch is set.
27	Timer Test	Follow the 27 Test Condition with a timer number, ranging from 1-8. This operation will test "true" if the timer is not timed-out at zero.
28	Phase Next Test	Follow the 28 Test Condition with a phase number, ranging from 1-8. This operation will test true if the phase is in the phase next register. There is a phase next register for each ring. The phase next register is set at the start of yellow (unless conditions delay the phase next decision, i.e. if Red Rest is in use and there is no demand) and stays constant until the phase is served.

Test Condition	Name	Description
29	Preemption Test	Follow the 29 Test Condition with a preempt number, ranging from 1-8. This operation will test true if the preempt sequence is active. Alternatively, the value **9** can also be used to monitor all of the preempt sequences for activity and cause the operation to test true if any preempt sequence is active.
30	Active Transit Function Test	Follow the 30 Test Condition with a transit function number, ranging from 1-8. This operation will test true if the transit function is active. Alternatively, the value **9** can also be used to monitor all of the transit functions for activity and cause the operation to test true if any transit function is active.
31	Active Service Plan Test	Follow the 31 Test Condition with a service plan number, ranging from 1-8. This operation will test true if the service plan is active. Alternatively, the value **0** can also be used to test true if no service plans were active.
32	Counter Test	Follow the 32 Test Condition with a counter number, ranging from 1-8. This operation will test true if the current counter value is greater than or equal to the programmed value (see the 217 Command).
33	Cycle Timer Test	Follow the 33 Test Condition with a cycle timer value, ranging from 0-255. This operation will test true if the value of the local cycle timer is equal to or greater than the test value.
34	TOD Circuit Test	Follow the 34 Test Condition with an TOD circuit code.
35	Relay Set Test	Follow the 35 Test Condition with a relay number, ranging from 1-8. This operation will test true if the relay is set. **Note: TOD Ckt 8 (Enable System Relays) must be active for test to be true.**

Test Condition	Name	Description
40	OR	Use the 40 Test Condition to make two or more tests OR'd with each other. One OR must be true for the function to be true. To OR two or more tests there must be a 40 Test Condition before each of the tests. OR tests can be combined with AND tests. In this case, a true condition requires that all ANDs are true and at least one OR is true, as follows: 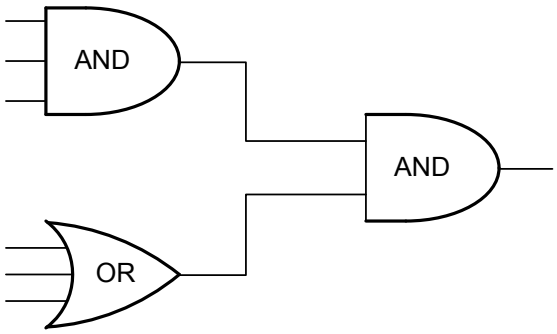

Phase Conditions

Phase Condition	Code
Walk	2
Ped Clearance	3
Red Clearance	4
Min Green	5
Green Rest	8
Passage	9
Any Green	11
Yellow	12
Any Red	13
Phase On*	14
* Phase is in Green, Yellow or Red Clearance	

Input Codes

In the description below, the symbol # is used to represent either a detector input number (1-32), a phase (1-8) or other values as needed.

Input Function		Code	Input Function		Code
N/U		0-10	Omit All Red Clear R2	ORC2	77
Veh Detector 1-8	VD#	11-18	N/U		78-80
N/U		19-20	External Start	EST	81
Ped Detector 1-8	PED#	21-28	Interval Advance	IADV	82
N/U		29-30	N/U		83
Hold 1-8	HLD#	31-38	Min Recall All Phases	MIN	84
N/U		39-40	Manual Control Enable	MCE	85
Ped Omit 1-8	POM#	41-48	N/U		86-90
N/U		49-50	Video Fail Inputs 1-8	VFI#	93-100
Vehicle Omit 1-8	VOM#	51-58	Veh Detector 9-16	VD#	101-108
N/U		59-60	N/U		109-110
Force-Off Ring 1	FO1	61	Veh Detector 17-24	VD#	111-118
Stop Time	STP	62	N/U		119-120
Inhibit Max Ring 1	IMT1	63	Clock Update	CLKR	121
Red Rest Ring 1	RRM1	64	Hardwire Control	HWC	122
Ped Recycle Ring 1	PR1	65	N/U		123-125
Max II Select Ring 1	MX21	66	Free	FREE	126
Omit All Red Clear R1	ORC1	67	N/U		127-130
N/U		68-70	Alarm 1-5	ALM#	131-135
Force-Off Ring 2	FO2	71	Flash In, Soft Flash	SFL	136
Stop Time Ring 2 Only	ST2	72	Conflict Mon Status	MONS	137
Inhibit Max Ring 2	IMT2	73	Door Open/Door Ajar	DORO	138
Red Rest Ring 2	RRM2	74	N/U		139-140
Ped Recycle Ring 2	PR2	75	Transit Priority 1-8	TPR#	141-148
Max II Select Ring 2	MX22	76	N/U		149-150

Input Codes, Con't

In the description below, the symbol # is used to represent either a detector input number (1-32), a phase (1-8) or other values as needed.

Preempt Input 1-8	PE#	151-158
N/U		159-160
Veh Detector 25-32	VD#	161-168
N/U		169-170
Coord Lines 1,2,4,8,16	CL#	171-175
N/U		176-177
Inhibit Transit Priority	ITP	178
N/U		179-180
Inhibit Transit Short Timing 1-8	IST#	181-188
N/U		189-190
Clear Transit Call 1-8	CTP#	191-198
LRT Ped Inhibit	LRPI	199
LRT 1-4 Check In TTG	L#WD	200-203
LRT 1-4 Check In	L#ND	204-207
LRT 1-4 Check Out	L#CO	208-211
N/U		212-255

Output Codes

In the descriptions below, the symbol # is used to represent either a phase number (1-8), an overlap interval (G, Y or R) or other values as needed. Note: Internal Logic outputs 1-12 (codes 201-214) may not be tested using Test Condition 23.

Output Function		Code
N/U		0-10
Red, Phase 1-8	#RED	11-18
N/U		19-20
Yellow, Phase 1-8	#YEL	21-28
N/U		29-30
Green, Phase 1-8	#GRN	31-38
N/U		39-40
Don't Walk, Phase 1-8	#DWK	41-48
N/U		49-50
Ped Clear, Phase 1-8	#PCL	51-58
N/U		59-60
Walk, Phase 1-8	#WLK	61-68
N/U		69-70
Check, Phase 1-8	#CHK	71-78
N/U		79-80
Next, Phase 1-8	#NXT	81-88
N/U		89-90
On, Phase 1-8	#ON	91-98
N/U		99-100
Overlap A, G/Y/R	OLA#	101-103
Overlap B, G/Y/R	OLB#	104-106
N/U		107-110
Overlap C, G/Y/R	OLC#	111-113

Output Function		Code
Overlap D, G/Y/R	OLD#	114-116
Flashing Logic Out	FLO	117
N/U		118-120
Coded Status Bit, A/B/C Ring 1	SB#1	121-123
Coded Status Bit, A/B/C Ring 2	SB#2	124-126
N/U		127-130
TOD Output 1-8	TO#	131-138
N/U		139-140
Overlap E, G/Y/R	OLE#	141-143
Overlap F, G/Y/R	OLF#	144-146
Watchdog	WDOG	147
N/U		148-150
Overlap G, G/Y/R	OLG#	151-153
Overlap H, G/Y/R	OLH#	154-156
LRT 1-4 Horizontal Bar	LT#H	157-160
Overlap I, G/Y/R	OLI#	161-163
Overlap J, G/Y/R	OLJ#	164-166
LRT 1-4 Vertical Bar	LT#V	167-170
Overlap L, G/Y/R	OLL#	174-176
LRT 1-4 Active Latch	LT#A	177-180
Coord Lines 1,2,4,8,16	CL#	181-185
N/U		186
Soft Flash	SFL	187

Output Codes, Con't

In the descriptions below, the symbol # is used to represent either a phase number (1-8), an overlap interval (G, Y or R) or other values as needed. Note: Internal Logic outputs 1-12 (codes 201-214) may not be tested using Test Condition 23.

Output Function		**Code**
N/U		188-190
Preempt Output 1-8	PE#	191-198
N/U		199-200
Internal Logic Out 1-8	*IL#*	*201-208*
N/U		209-210
Internal Logic Flash Output 9-12	*IL#*	*211-214*
Flash Yel LTA 1/3/5/7	FYA#	215-218
N/U		219-220
Flash Yel Clr 1/3/5/7	FYC#	221-224
N/U		225-230
Don't Walk Ped Overlap A-H	PO#D	231-238
N/U		239-240
Walk Ped Overlap A-H	PO#W	241-248
N/U		249-255

Using Timers

There are eight timers in Internal Logic. Any one of eight timers can be loaded via a **208 Command**. Within the command structure of another sub-module, any one of the eight timers can be tested with the **27 Test Condition**.

To develop an understanding of a timer, think of it as a tri-state device. The three states are listed below.

1. Loaded — Loaded with it's associated time because it's test string is true
2. Decrementing — Decrementing from it's associated time towards **0** seconds because the test string has become false
3. Timed-Out — Timed-out at **0** seconds

A timer can be reloaded or moved to another state if its test string becomes true.

An example of a 208 timer command sub-module is shown below:

Step	Value	Line Description
1	208	Load a timer if test string is true, then
		decrement it when the test string is false
2	1	Timer #
3	10	Timer value (1.0 seconds)
4	21	Phase condition test
5	8	Phase #
6	12	Input code - (8 Yellow)

A timer can be tested with the 27 test. The test is true if the timer is in State #1 (Loaded) or State #2 (Decrementing). The test is false if the timer is in State #3 (Timed-out). In other words, the 27 test is true if the timer is not timed-out.

An example of a 27 timer test within a 209 (set a latch) command sub-module is shown below:

Step	Value	Line Description
7	209	Set a latch if test string is true
8	1	Latch #
9	24	Not
10	27	Test if timer is not timed-out at zero
11	1	Timer #

Setting Latches

There are eight latches in Internal Logic. Any one of eight latches can be set via a **209 Command**. Any one of the eight latches can be released via a **210 Command** with Latch # of (1-8). Alternately all of the eight latches can be released via a **210 Command** with Latch # of (9). Within the command structure of another sub-module any one of the eight latches can be tested with the **26 Test Condition**.

To develop an understanding of a latch, think of it as a bi-state device. After the controller power-up, all latches are set at the released state. The two states are listed below.

1. Set via 209 Command — Set by a 209 Command because the test string was momentarily true

2. Released — At a released state on power-up or at a released state because it has been released from a set state by a 210 Command because its test string was momentarily true

An example of a 209 set latch command sub-module is shown below:

Step	Value	Line Description
7	209	Set a latch if test string is true
8	1	Latch #
9	24	Not
10	27	Test if timer is not timed-out at zero
11	1	Timer #

An example of a 210 release latch command sub-module is shown below:

Step	Value	Line Description
28	210	Release a latch if test string is true
29	1	Latch #
30	21	Phase condition test
31	6	Phase #
32	12	Yellow

A latch can be tested with the 26 Test Condition. The test is true if the timer is in State #1 (Set). The test is false if the latch is in State #2 (Released). An example of a 26 latch test within a 209 (set a latch) command sub-module is shown below:

Step	Value	Line Description
18	215	Turn on TOD Circuit if test string is true
19	65	Time clock circuit # (Service Plan 1)
20	26	Test if latch is set
21	1	Latch #

Using Counters

There are 8 counters in Internal Logic. Any one of 8 counters can be set to a specific value (0-255) via a **217 Command** with a Counter # of (1-8). Alternately all of the 8 counters can be set to a specific value (0-255) via a **217 Command** with a Counter # of (9). Any one of 8 counters can be incremented, by one, via a **216 Command**. Within the command structure of another sub-module, any one of the 8 counters can be tested to see if the counter value is greater than or equal to a programmed value, with the **32 Test Condition**.

A counter is used to record successive events. The counter value can be set, to a value between (0-255) via the **217 Command**, a counter that has never been active will start with a value of zero. With each successive testable event a counter will then be incremented by one. At any time a counter can be tested via the **32 Test Condition**, as part of the test string of another operator. When the counter reaches a threshold value, the **32 Test Condition** will be true.

An example of a 217 counter command sub-module is shown below:

Step	Value	Line Description
1	217	Set a counters to a value if test string is true
2	1	Counter #
3	5	Counter value
4	26	Latch set test
5	5	Latch#

An example of a 216 counter command sub-module is shown below:

Step	Value	Line Description
1	216	Increment a counter if test string is true
2	1	Counter #
3	28	Phase next test
4	3	Phase #

A counter can be tested with the 32 test. The test is true if the counter value is equal to or greater than a set value. The test is false if the counter value is less than a set value.

An example of a 32 counter test within a 215 (turn on TOD circuit) command sub-module is shown below:

Step	Value	Line Description
1	215	Turn on TOD circuit if test string is true
2	36	TOD Circuit # (Vehicle Recall Phase 4)
3	32	Is counter g. t. or equal to the programmed value?
4	3	Counter #

Setting Relays

There are 8 relays in Internal Logic. Relays are unique Internal Logic functions because they can be shared with other local controllers in an interconnected system. Any one of the 8 relays can be set using a **223 Command** and subsequent user defined tests. Within the command structure of another sub-module, any one of the 8 relays can be tested to see if the relay is set, with the **35 Test Condition**. The **223 Command** is non-latching, meaning that a relay will un-set itself when the test conditions go false.

In order to share the status of relays between local controllers, it is necessary for the controllers to be part of a system with functional, local-to-local communications. Further, one of the controllers in the system must be programmed to operate as a master, in Master Mode "1", and some of the local controllers must be enabled, via programming, at the master controller. The local controllers that must be enabled are those that will set relays. It is recommended that local controllers that are not setting relays be left "disabled", that is, not consuming master polling commands. Even further, the master controller and any local controllers that will be using a **35 Test Condition** to test relays must have TOD circuit "8" turned on. Circuit 8 is called "Enable Sys Relays".

Uses for Internal Logic relays are unlimited, but might include minor actions like forwarding a preemption call from one intersection to another, or using a phase condition at one intersection to place a hold on a phase at an adjacent intersection. More significant actions are possible as well, like counting cars coming out of large facility (i.e. a stadium or church) and initiating a new system-wide timing plan to disburse the traffic.

An example of a **223 Command** (Relay Set) sub-module is shown below:

Step	Value	Line Description
1	223	Set a local relay if conditions met
2	3	Relay #3
3	29	Preemption active test
4	1	Preempt #1

An example of a **35 Test Condition** (Relay Test) sub-module is shown below:

Step	Value	Line Description
1	206	Input true if conditions met
2	152	Input, Preempt #2
3	35	System relay is tested for Set
4	3	Relay #3

Internal Logic Programming Screens

To make changes to Internal Logic programming, first bring up the **Main Menu** by pressing **NEXT**

```
                --MAIN MENU--

        1.RUN MODE        3.UTILITIES

        2.PROGRAM MODE

        -- AUX Switch ON = Stop Time --
            --USE F KEY FOR HELP--
```

Select 2. **Program Mode**

```
            --PROGRAM MODE MENU--

1.SECURITY CODE  5.PREEMPTION     8.I/O
2.CONTROLLER     6.COMM/REPORT      CONFIG
3.COORDINATION   7. TRANSIT       9.INTERNAL
4.TIME CLOCK        PRIORITY        LOGIC
```

Select 9. **Internal Logic**

```
PG  1< OF 64  --INTERNAL LOGIC--
    (TIMERS 1-4 IN TENTHS, 5-8 IN SECONDS)
ENT     VALUE
  1        0
  2        0
  3        0
  4        0
  -PGDN FOR MORE–USE KEY 'D' TO CLEAR ALL
```

Each screen displays four Internal Logic programming entries and their associated values. 64 screens are required to display all 256 available programming entries. When an appropriate value is entered, a value description appears to the right, verifying the programming is correct. (Extensive help screens are available by pushing the **F** key).

Note that a 207 “No Operation” command can be inserted or removed from the middle of a program by using the “+” and “-“ keys.

Screen 2 of 64 is similar:

```
PG  2< OF 64  --INTERNAL LOGIC--
    (TIMERS 1-4 IN TENTHS, 5-8 IN SECONDS)
ENT     VALUE
  5        0
  6        0
  7        0
  8        0
  -PGDN FOR MORE–USE KEY 'D' TO CLEAR ALL
```

Internal Logic Examples

Internal Logic programming is best explained through practical examples. The user is encouraged to use the following examples on a test controller to build confidence with these powerful tools.

Internal Logic Example #1-
Increased Walk/Don't Walk Times for Handicapped Ped

This logic package is for an intersection with phases 1, 2, 4, 5, 6 & 8. During coord, phases 2 and 6 are the coord phases. Logic provides phase 4 with longer Walk and FDW times to assist a handicapped person. The handicapped person must push the phase 4 pedestrian pushbutton for at least 3.0 seconds, which moves the controller to Service Plan 1, which has longer phase 4 Walk and FDW times. Service Plan 1 is disabled when phase 4 goes pedestrian clearance. As this release of Service Plan 1 occurs at the same instant at which phase 4 goes to FDW, the FDW still uses the longer value (16) associated with Service Plan 1.

A flashing feedback output is provided for the phase 4 pushbuttons (assuming they are equipped with a feedback light) via phase 4 Ped Yellow. Output reassignment can be used to send the flashing internal logic output #9 over to phase 4 Ped Yellow at C1-37. The feedback circuit should be stepped down to a lower voltage before leaving the controller cabinet.

Entry	Value	Line Description	Sub Module Description
1	208	Load a timer if test string is true, then decrement when the test string is false	Load timer #1 with 3.0 seconds when 4 Ped Det is not on and decrement when 4 Ped Det is on
2	1	Timer #	
3	30	Timer value (3.0 seconds)	
4	24	Not	
5	22	Input test	
6	24	Input code - (4 Ped Det)	
7	209	Set a latch if test string is true	
8	1	Latch #	Set latch #1 when timer #1 is times-out at zero
9	24	Not	
10	27	Test if timer is not timed-out at 0	
11	1	Timer #	
12	208	Load a timer if test string is true, then decrement when the test string is false	Load timer #5 with 20 seconds when latch #1 is not set and decrement when latch #1 is set
13	5	Timer #	
14	20	Timer value (20 seconds)	
15	24	Not	
16	26	Test a latch	
17	1	Latch #	
18	215	Turn on TOD Circuit if test string is true	
19	65	Time clock circuit # (Service Plan 1)	Call Service Plan 1 if latch #1 is set
20	26	Test if latch is set	
21	1	Latch #	
22	210	Release a latch if test string is true	
23	1	Latch #	Release Latch # 1 to release Service Plan 1 when 4 goes to pedestrian clearance
24	21	Phase condition test	
25	4	Phase #	
26	3	Ped Clearance	
27	20	And	
28	24	Not	
29	27	Test if timer is not timed-out at 0	
30	5	Timer #	
31	205	Turn on an output if test string is true	
32	211	Internal Logic Output #9 Flashing	Turn on phase 4 handicapped pedestrian feedback light when in Service Plan 1 and not in phase 4 Ped Clearance
33	31	Test Service plan	
34	1	Service Plan #	
35	20	And	
36	24	Not	
37	21	Phase condition test	
38	4	Phase #	
39	3	Ped Clearance	

Internal Logic Example 2:
Early Release of Main St. Phase Following Delayed Overlap

Figure 48: Phase Diagram

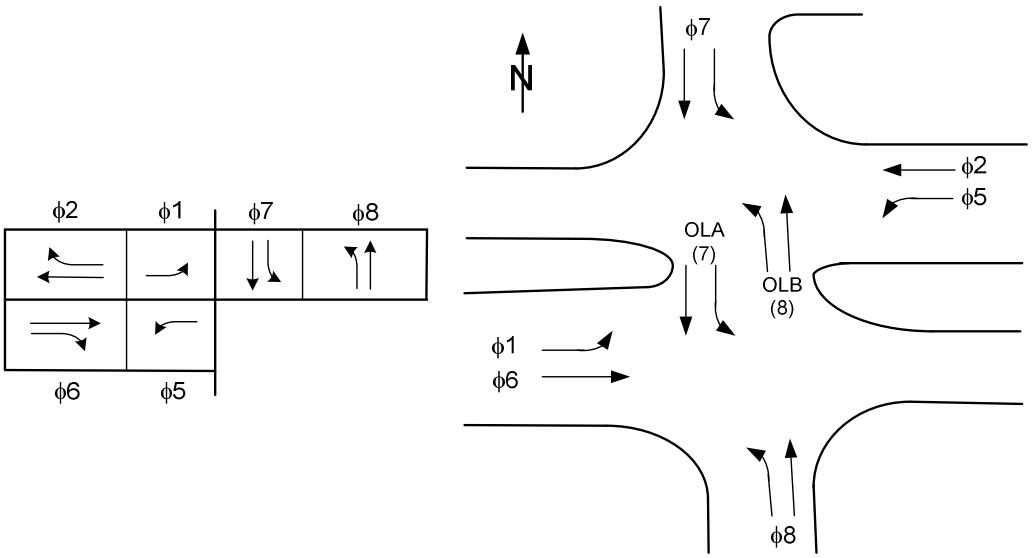

This logic package is for the intersection shown above. Phase 8 clears the south 1/2 of the intersection and OLB clears the north 1/2 of the intersection. After the phase 8 Red Clearance, bring up the phase 6 Green. Thus, the phase 6 Green will begin before phase 2 Green. The module that begins with step 15 will turn on the phase 6 Green if latch #1 is set or if phase 6 is in a Green condition.

Via output assignment connect internal logic output #1 to the normal phase 6 Green output. Also connect internal logic output #2 to the normal phase 6 Red output.

Step	Value	Line Description	Sub Module Description
1	208	Load a timer if test string is true, then decrement it when the test string is false	Load Timer #1 with 1.0 seconds when 8 Yellow is on and decrement when 8 Yellow goes off. This is a synthetic phase 8 Red Clearance.
2	1	Time #	
3	10	Timer value (1.0 seconds)	
4	21	Phase condition test	
5	8	Phase #	
6	12	Input code - (8 Yellow)	
7	209	Set a latch if test string is true	Set Latch #1 when Timer #1 is timed out and the OLB Yellow is on.
8	1	Latch #	
9	24	Not	
10	27	Test if timer is not timed out at zero	
11	1	Timer #	
12	20	And	
13	23	Test if output is on	
14	105	Output # (OLB Yellow)	
15	205	Turn on an output if test string is true	Turn on the 'phase 6 Green' load switch output when Latch #1 is set or if phase 6 is Green.
16	201	Output # (Internal Logic #1 - 6 Green)	
17	40	Or	
18	26	Test if latch is set	
19	1	Latch #	
20	40	Or	
21	21	Phase condition test	
22	6	Phase #	
23	11	Green	

24	205	Turn on an output if test string is true	
25	202	Output # (Internal Logic #2 - 6 Red)	
26	24	Not	
27	26	Test if latch is set	Turn on the 'phase 6 Red' load switch
28	1	Latch #	output when Latch #1 is not set and phase 6
29	20	And	is in a Red condition.
30	21	Phase condition test	
31	6	Phase #	
32	13	Red	
33	210	Release a latch if test string is true	
34	1	Latch #	Release Latch #1 when phase 6 is in a
35	21	Phase condition test	Min Green condition.
36	6	Phase #	
37	5	Min Green	

Internal Logic Example 3:
Alternate Coordination Plan During Railroad Preemption

Figure 49:

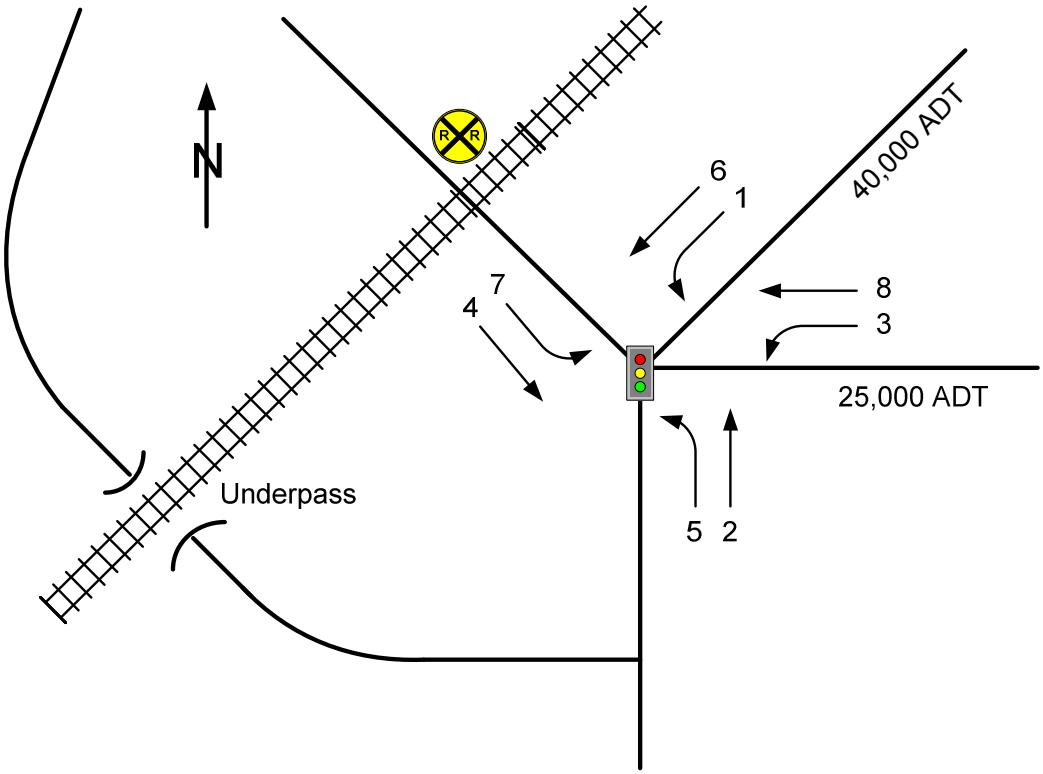

This logic package is for the intersection above. There is a railroad adjacent to the intersection which has 20 minute switching operations. Phase 8 has a moderately heavy movement which is blocked by the train. An underpass SE of the intersection offers an alternate route. This logic package will determine which coord plan (1-3) is being called by the TOD scheduler. It will enable a complementary coord plan with a larger split for phase 3 which will move traffic toward the alternate route. These special coord plans (4-6) will also call in Service Plan 1 and Max Plan 1 so phase 3 can use its larger split.

Entry	Value	Line Description	Sub Module Description
1	209	Set a latch if test string is true	
2	1	Latch #	Set latch #1 when coord plan 1 is active
3	25	Test for local coord plan	
4	1	Coord plan #	
5	209	Set a latch if test string is true	
6	2	Latch #	Set latch #2 when coord plan 2 is active
7	25	Test for local coord plan	
8	2	Coord plan #	
9	209	Set a latch if test string is true	
10	3	Latch #	Set latch #3 when coord plan 3 is active
11	25	Test for local coord plan	
12	3	Coord plan #	

Internal Logic Example 3: Continued

13	210	Release a latch if test string is true	
14	1	Latch #	
15	40	Or	
16	25	Test for local coord plan	Release latch #1 when coord plan 2 or 3 is active
17	2	Coord plan #	
18	40	Or	
19	25	Test for local coord plan	
20	3	Coord plan #	
21	210	Release a latch if test string is true	
22	2	Latch #	
23	40	Or	
24	25	Test for local coord plan	Release latch #2 when coord plan 1 or 3 is active
25	1	Coord plan #	
26	40	Or	
27	25	Test for local coord plan	
28	3	Coord plan #	
29	210	Release a latch if test string is true	
30	3	Latch #	
31	40	Or	
32	25	Test for local coord plan	Release latch #3 when coord plan 1 or 2 is active
33	1	Coord plan #	
34	40	Or	
35	25	Test for local coord plan	
36	2	Coord plan #	
37	214	Call coord plan if test string is true	
38	4	Coord plan #	If in preempt #5 and the last called for coord plan was 1, call coord plan 4
39	29	Preemption active test	
40	5	Preemption number	
41	20	And	
42	26	Test if latch is set	
43	1	Latch #	
44	214	Call coord plan if test string is true	
45	5	Coord plan #	If in preempt #5 and the last called for coord plan was 2, call coord plan 5
46	29	Preemption active test	
47	5	Preemption number	
48	20	And	
49	26	Test if latch is set	
50	2	Latch #	
51	214	Call coord plan if test string is true	
52	6	Coord plan #	If in preempt #5 and the last called for coord plan was 3, call coord plan 6
53	29	Preemption active test	
54	5	Preemption number	
55	20	And	
56	26	Test if latch is set	
57	3	Latch #	

System

General

A system is defined as a group of from 1 to 50 controllers that share communications through a single communications channel. If the system includes more than one controller, one of the controllers needs to be programmed to operate in *system mode* (also called the master controller). When the controller is operating in System Mode, the controller will send out commands to other local controllers to update time clocks and implement a particular coord plan. These commands are sent out on a once per minute basis. The controller will also act as a communications hub, allowing the NWSCentral PC software to communicate with all local controllers in the system through the master controller. It would still be possible to establish direct, on-site communications between a PC (laptop) and any local controller.

Establishing a system of controllers allows the user to *remotely* accomplish powerful tasks like robust synchronization, real-time observation of controller operations, database manipulation, and collecting logs and reports. Synchronization is enhanced because the master controller is able to keep all of the local controller time clocks in step, preventing the delays that occur when clocks drift. The observation of any individual local controller, or the entire system of controllers, becomes extremely easy through the NWSCentral PC interface. Controller databases can be quickly verified, saved or changed without the need to make a trip to the intersections. Helpful logs and reports become more important to the traffic engineer because of the ease in which they can be collected.

Programming a controller to operate as both a local controller and master controller is described in the chapter on **Communications and Reports**. Also described there are the physical connections needed to configure a system of controllers.

Modes of System Operation

There are five modes of system operation. Each responds to different traffic needs and hardware configurations.

1. Time of Day (TOD) operation using the Day Program in the master controller or the Day Program in the local.
2. TOD operation using the Central Scheduler in a PC running NWSCentral. This is described in the NWSCentral manual.
3. Split Variant Operation (SVO) using the master controller and up to 8 master system detectors. SVO can be combined with PPS.
4. Proactive Plan Selection (PPS) using the master controller and up to 8 master system detectors.
5. Platoon Progression which is described in the Coordination section of this manual.

Split Variant Operation

Split Varient Operation is a basic and simple form of traffic responsive operation. It is based on the premise that TOD coordination is normally quite acceptable, but that the TOD operation would be enhanced if the splits could be changed based on traffic demand.

Consider an arterial that has inbound flow in the morning and outbound flow in the evening. These two peak periods can each span up to 3 hours. During a peak period the traffic flow on the main street will rise, go through peak surges, and eventually taper off. It would be helpful if the coordinated operation could respond to this rise and fall of main street demand by varying the split of the intersections. During periods when the main street flow is moderate the split for the side street should be increased. During periods of heavy main street flow the split for the side should be decreased.

Change without Transition – Changing from one coord plan to another causes the intersections in a system to go through a transition period of several minutes. During this transition the controllers synchronize to the new cycle length and their new offset. These transitions, in response to a TOD command or a traffic responsive algorithm, will cause turbulence in the traffic flow. However if the old and new coord plans have the same cycle length and offset, **but different splits**, **then there is no transition**. The new split is implemented at the next local zero point.

Coord Plans Allowed - In Split Variant Operation (SV Operation) there are 12 possible coord plans ranging from 4-16. At any one time either plan 5, 8, 12, or 15 are the base plan. Plan 5 & 8 are associated with Inbound & plans 12 & 15 are associated with Outbound. Consider SV Operation when the base plan is 5. Plan 5 is associated with medium flow on the main street. When the main street flow is light then SV Operation will bring in plan 4. In plan 4 the split for the minor phases will be larger than in plan 5 thus more minor phase traffic can be served. When SV Operation detects that the main street traffic is heavy the system moves to plan 6, where the split for the minor phases will be smaller than in plan 5 thus more main street traffic can be served. The constraint is that coord plans 4, 5 & 6 must have the same cycle length & offset, but different splits. All intersections in a system would have similar coord plans and the same TOD day program. The day program of each intersection would call in some combination of coord plans 5 or 8 when the master is in SV Inbound. When the master is in SV Outbound the day program of each intersection would call in some combination of coord plans 12 or 15.

Figure 50: Coord Plan Matrix

Light Coord Plan	Medium Coord Plan	Heavy Coord Plan	
4	5	6	Inbound
7	8	9	
11	12	13	Outbound
14	15	16	

The table shows that there are 4 base plans 5, 8, 12 & 15. At any one time the day program for all intersections in the system will be calling for coord plan 5, 8, 12 or 15.

Detectors for SV Operation – For every master there are 16 master system detectors. The first 8 are used for SV Operation. Master system detectors 1-4 are associated with Inbound and master system detectors 5-8 are associated with Outbound. For SV Operation the master must be in communications mode 2 – Polling. In this mode the master polls the locals to get the volume and occupancy of the master system detectors.

Figure 51: Detector Table

Detector Definition Table	
Intersection Detectors	32/Intersection
System Detectors	8/Intersection - assigned from Intersection Detectors
Master System Detectors	16/Master - assigned from System Detectors of intersections in the system

SV Operation is used on an arterial. One direction along the arterial is inbound and the other is outbound. The four inbound detectors are 1-4. A typical placement is to have two inbound detectors in advance of the inbound entry intersection. The other two inbound detectors are placed in advance of a mid-system critical detector. A similar setup is used for the 4 outbound detectors 5-8.

The local intersection detectors that are used for system detectors **should have detector fail monitoring enabled.** When these local detectors are polled by the master the communications will report back if a detector is failed. This is crucial information for system operation.

SV Operation in one direction can operate with 2, 3, or 4 of the master system detectors for that direction. When setting up the master system detectors for inbound at least 1 of master system detectors 1-4 must be enabled. If 3 or 4 detectors of master system detectors 1-4 are enabled the SV inbound operation will continue if one or two detectors fail. If only 1 or 2 detector of master system

detectors 1-4 are enabled the SV inbound operation will continue as long one detector is not failed.

VPLUSKO – The calculations for SV Operation begin with the determination of the VPLUSKO, for each of the enabled master system detectors 1-8, once per minute.

- VPLUSKO: Flow rate over a detector, adjusted for occupancy.
- Flow Rate: Vehicles/Hour

The values of VPLUSKO rise and fall somewhat erratically from minute to minute. To correct for this the VPLUSKO values are smoothed. A smoothed VPLUSKO value is calculated, for each of the master system detectors 1-8, once per minute.

- Smoothed VPLUSKO: A mixed value calculated with new data from the current minute and older data.

SV Operation (Inbound or Outbound) – The enabling of SV Operation is done at the master controller in the system. At any one time the master controller can be in SV Outbound, SV Inbound or no SV operation. This is controlled by two TOD circuits: Split Variant Inbound - circuit 180 & Split Variant Outbound - circuit 181. With the day program in the master controller turn these circuits on/off.

Assume that the master is in SV Inbound, the TOD day program is calling for plan 5 and that master system detectors 1-4 are assigned and working. Each minute, when the smoothed VPLUSKO is calculated for master system detectors 1-4, they are also averaged.

- Average Smoothed VPULSKO: Average Smoothed VPLUSKO of active Inbound or Outbound master system detectors.

In this example SV Inbound operation starts with coord plan 5 operating. For the first 5 minutes no plan change is allowed as the master accumulates master system detector data. Then the SV Operation plan selection test is done every four minutes. The average smoothed VPLUSKO inbound is compared with threshold values to determine if a plan change should be made. A sample table is below that shows the four threshold values associated with coord plans 4, 5 & 6. When the coord plan moves, it is only allowed to move by one unit at any 4 minute test point. If the average smoothed VPLUSKO dropped to 950 or below then it will move out of coord plan 5 and into coord plan 4. If the average smoothed VPLUSKO rises to 1250 or above, the controller will move out of coord plan 4 and in to coord plan 5. To move out of coord plan 5 and in to coord plan 6 the average smoothed VPLUSKO would have to rise to 1600. The four threshold values are user settable. Note that this example uses actuated coordination with small positive values for the phase 2 & 6 coord phase force-offs.

Figure 52: Force-Off & VPLUSKO Entries

Note: Artificial VPLUSKO threshold values are shown for the sake of discussion. These values are user settable.

Coord Plan	Cycle Sec.	Description	Force Off (Phase)								Ave. Smoothed VPLUSKO	
			1	2	3	4	5	6	7	8	In to	Out of
4	100	Light	78	4	22	53	80	4	24	55	n/a	n/a
5	100	Medium	67	10	24	50	69	10	22	52	1250	950
6	100	Heavy	60	12	23	45	60	12	25	47	1600	1400

SV Operation & Traffic Analysis Software – Often coordination plans for an arterial are developed using traffic analysis software such as Synchro™. The input for the software is turning movement counts, lanes, phasing, etc. The turning movement counts are from the peak 15 or 60 minutes of the period that is analyzed. In developing SV Operation it was assumed that the coord plan developed by the traffic analysis software would be used as the medium plan.

Consider an SV Outbound operation that uses plans 11, 12 & 13. Where 11 is Light, 12 is Medium & 13 is Heavy. The coord plan developed from the traffic analysis software would be coord plan 12 Medium. The user would then copy these plans to coord plans 11 Light & 13 Heavy. Then the force-offs, and thus the splits, for coord plan 11 Light & 13 Heavy would be manually adjusted or adjusted by a user developed spreadsheet. As shown on the earlier example in the Light coord plan the minor phase force-off would be increased and the force-offs for the coord phases could be decreased (if they were not already zero). For the Heavy coord plan the minor phase force-off would be decreased and the force-offs for the coord phases could be increased (if it is desired to enable actuated coordination). When decreasing minor phase force-offs special attention must be given to the remaining split and the effect of pedestrian actuation. When increasing the last minor phase force-off special attention must be given to the reduced coord phase split and the ability to served the coord phase pedestrian movement prior to local zero.

SV Operation Logging – To assist in the real time analysis and fine tuning of SV Operation a logging function is provided. The logging function records the average Inbound and Outbound VPLUSKO and the chosen Split Variant coord plan. Logging, when enabled, occurs every 5 minutes. The logging function is enabled by activating a software switch also records something called the Proactive coord plan. Proactive coord plans will be described later in this System section.

It is recommended that SV logging be done for 1 week, prior to activating SV Operation while still running TOD operation. This will give a better understanding of the rise and fall of Inbound and Outbound VPLUSKO values for the candidate

system. A total of 2,000 log entries can be stored at the master. Then choose VPLUSKO thresholds based on the recorded values. Place these values in the master and then activate SV Operation. During the 1st month of operation SV logging should be done and its results analyzed. During this month extensive field observations should also be conducted. After fine tuning the SV logging should be periodically activated and reviewed.

Proactive Plan Selection

Where Split Varient Operation (SVO) was designed to overlay the ability to change splits on top of a TOD plan, **Proactive Plan Selection** (PPS) goes a little further, allowing traffic demand to overlay changes to the entire TOD coordination plan. Also, it allows the variations in the start and end times of the coordinated period. Programming PPS is very simple, with only nine programmable variables making up the core module.

Consider an arterial that has inbound flow in the morning and outbound flow in the evening. On a day to day basis the traffic characteristics can vary so that the PM peak period begins or ends at different times based on the day of the week. As an example, most Monday's may have different peaking characteristics than most Friday's. On a week-to-week and season-to-season basis the peaking characteristics will vary. Traffic is the summation of millions of driver decisions, weather conditions, road hazards, and innumerable other factors. The result is that the beginning and end of the peak period can vary, and the actual flow rates in vehicles/hours can vary. In response to this variance we offer **Proactive Plan Selection**. PPS is an overlay on top of TOD operation. **For a peak period, PPS is used to choose between three different cycle lengths, it also allows for considerable variance in when the peak plan will begin and end. In non-peak periods PPS is used to choose between two different cycle lengths, or Free.** This discussion will be divided into three major methods of using PPS.

1. Proactive Plan Selection for a Directional System
2. Non-Directional Option for Proactive Plan Selection
3. Proactive Plan Selection in conjunction w/ Split Variant Operation

1. Proactive Plan Selection for a Directional System – For a directional arterial there are typically five periods of weekday traffic. They are shown in the figure below.

Figure 53: Traffic Periods

Period Ends	Period Description
6:30	Early Morning Average
9:15	AM Inbound
15:30	Midday Average
18:15	PM Outbound
0:00	Late Night Average

Enabling PPS – PPS is enabled by turning on one of three TOD circuits. The commands to turn on/off these circuits are placed in the Day Program of the master controller.

- Proactive Plan Select Average (PSA) – Circuit 177
- Proactive Plan Select Inbound (PSI) – Circuit 178
- Proactive Plan Select Outbound (PSO) – Circuit 179

The figure below shows the relationship between inbound and outbound weekday flows on a typical directional arterial.

Figure 54: Daily Traffic Flow - Directional

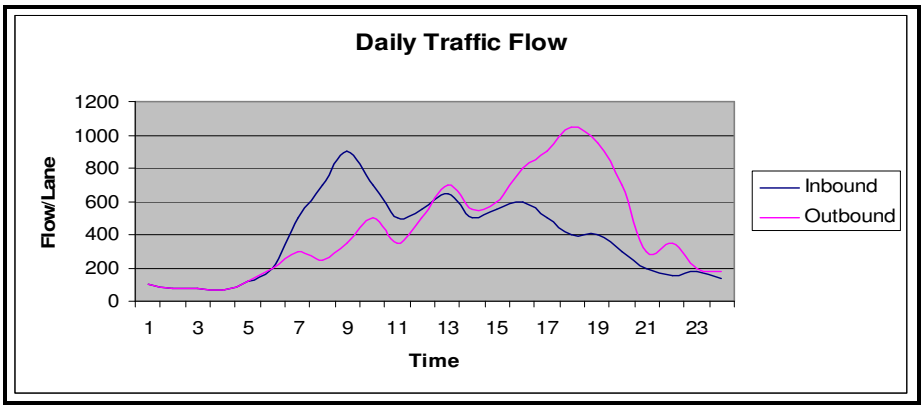

8 Coord Plans for Proactive Plan Selection

The table below shows the 8 coord plans that form the basis of PPS. The plan numbers shown must be used. The cycle lengths and other coordination parameters are user settable. There are two Average plans 1 & 2. There are three inbound plans and three outbound plans. Consider PPS Inbound which has plans 3, 5 & 8 with ascending cycle lengths. When moving into the AM plan one of these three plans, and thus one of these three cycle lengths is chosen. If the main street traffic flow is light plan 3 is selected, if the main street traffic flow is heavy plan 8 is selected. For PM there is a similar PPS Outbound operation that selects between plans 10, 12 & 15.

Figure 54: Coord Plans

Coord Plans & Descriptions				
Plan Number	Direction	Cycle Sec.	TOD Default	Coord Plan Description
1	Ave	60	Yes	Late night TOD or Midday light
2	Ave	75	Yes	TOD midday
3	In	80		Inbound light flow
4				
5	In	90	Yes	Inbound medium, TOD default
6				
7				
8	In	100		Inbound heavy
9				
10	Out	90		Outbound light flow
11				
12	Out	100	Yes	Outbound medium, TOD default
13				
14				
15	Out	110		Outbound heavy
16				

Border Crossing – Each weekday there are four critical times called border crossings. They are associated with entering and leaving the AM & PM peak periods. In TOD operation these border crossings are at fixed times. In PPS these four times are based on a combination of the ratio of Inbound & Outbound VPLUSKO and Inbound or Outbound directional VPLUSKO.

- Inbound VPLUSKO – The average smoothed value of all inbound master system detectors (1-4).
- Outbound VPLUSKO – The average smoothed value of all outbound master system detectors (5-8).

Demonstration System for PPS - The figure below shows the layout of a simple three intersection system with detector placement for PPS.

Figure 54 Proactive Plan Selection Example

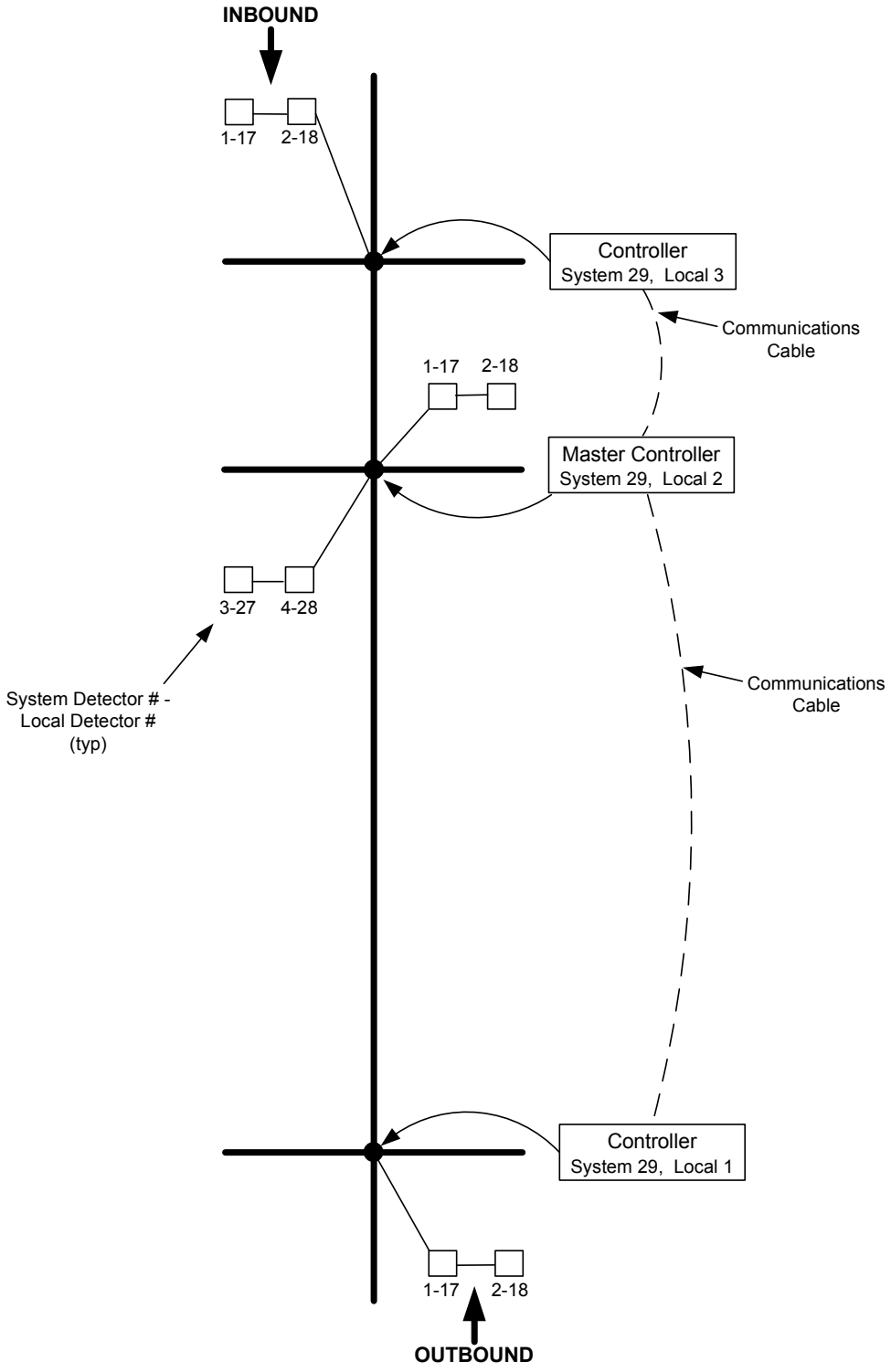

Master Data - The tables below show the data entry at the master controller. Local detector, system detector, and master system detector have been previously defined. The system mode for the controller that is the master is set to (2 – Polling). The items in the second table will be defined in the discussions that follow.

Figure 56: Master System Detector Data

Example of Data at Master

Master System Detector	Master # Local #	Sys Det	Local Det	
1	29-1	1	17	Inbound
2	29-1	2	18	
3	29-2	1	17	
4	29-2	2	18	
5	29-2	3	27	Outbound
6	29-2	4	28	
7	29-3	1	17	
8	29-3	2	18	

Figure 57: Master Data

Item	Value	Range
Inbound entry 'n' (%)	150	110-160, 1
Inbound exit 'm' (%)	110	90-140, 1
Outbound entry 'n' (%)	140	110-160, 1
Outbound exit 'm' (%)	110	90-140, 1
Inbound VPLUSKO Target	1400	1050-1800
Outbound VPLUSKO Target	1550	1050-1800
Free Threshold (VPLUSKO)	400	200-600
Average Plan 1 Threshold (VPLUSKO)	520	200-700
Average Plan 2 Threshold (VPLUSKO)	650	350-900
Times to begin & end Inbound Proactive PS	06:00 & 09:45	Enable 30 minutes before/after TOD coord plan
Times to begin & end Outbound Proactive PS	15:00 & 18:45	Enable 30 minutes before/after TOD coord plan

Maximum VPLUSKO – After entering PPS Outbound the Outbound VPLUSKO will continue to fluctuate. The maximum value that is attained for the Outbound VPLUSKO is stored. This value of maximum Outbound VPLUSKO is part of the decision process for determining when to exit PPS Outbound. Similarly when in Inbound PPS the maximum value of Inbound VPLUSKO is stored.

- **PM Directional Border Crossings** – The border between PPS Average to PPS Outbound operation occurs when the ratio of Outbound/Inbound flow meets or exceeds a settable threshold. The border between PPS Outbound to PPS Average occurs when the ratio of Outbound/Inbound flow falls below a settable threshold & the Outbound flow drops below 70% of the maximum value, defined above. An example of these border crossings are shown below. The figure 58 shows the settings for the day program at the master. The shaded area shows the commands that relate to the PPS Outbound operation.

Figure 58: Master Day Program

Entry	Day Plan	Time	Coord Plan	Coord Plan Or Circuit		State On(x) Or Off
1	1	00:00		177	PSA	X (1)
1	1	06:00		177	PSA	
2	1	06:00		178	PSI	X
3	1	06:30	5			
4	1	08:45		177	PSA	X
5	1	08:45		178	PSI	
6	1	09:15	2			
7	1	15:00		177	PSA	
8	1	15:00		179	PSO	X
9	1	15:30	12			
10	1	17:45		177	PSA	X
11	1	17:45		179	PSO	
12	1	18:15	2			

(1) Restart circuit after midnight

<u>Use Entered Data</u>

- Inbound entry ‘n’ % - The ratio of Inbound VPLUSKO/Outbound VPLUSKO that must be met or exceeded before moving from PPS Average to PPS Outbound. Range: 110-160, 1

- Outbound entry ‘n’ % - The ratio of Outbound VPLUSKO/Inbound VPLUSKO that must be met or exceeded before moving from PPS Average to PPS Outbound. Range: 110-160, 1

- Inbound exit ‘m’ % - The value that the ratio of Inbound VPLUSKO/Outbound VPLUSKO must be at or below before moving from PPS Outbound to PPS Average. Range: 90-140, 1

- Outbound exit ‘m’ % - The value that the ratio of Outbound VPLUSKO/Inbound VPLUSKO must be at or below before moving from PPS Outbound to PPS Average. Range: 90-140, 1

Calculated Values

- Maximum VPLUSKO Inbound – After entering PPS Inbound the maximum value of Inbound VPLUSKO. This is used in determining when to exit PPS Inbound.

- Maximum VPLUSKO Outbound – After entering PPS Outbound the maximum value of Outbound VPLUSKO. This is used in determining when to exit PPS Outbound.

Graph of Typical PM – The graph below plots the traffic flow against the time points for actions from the day program at the master.

Figure 59: Typical PM

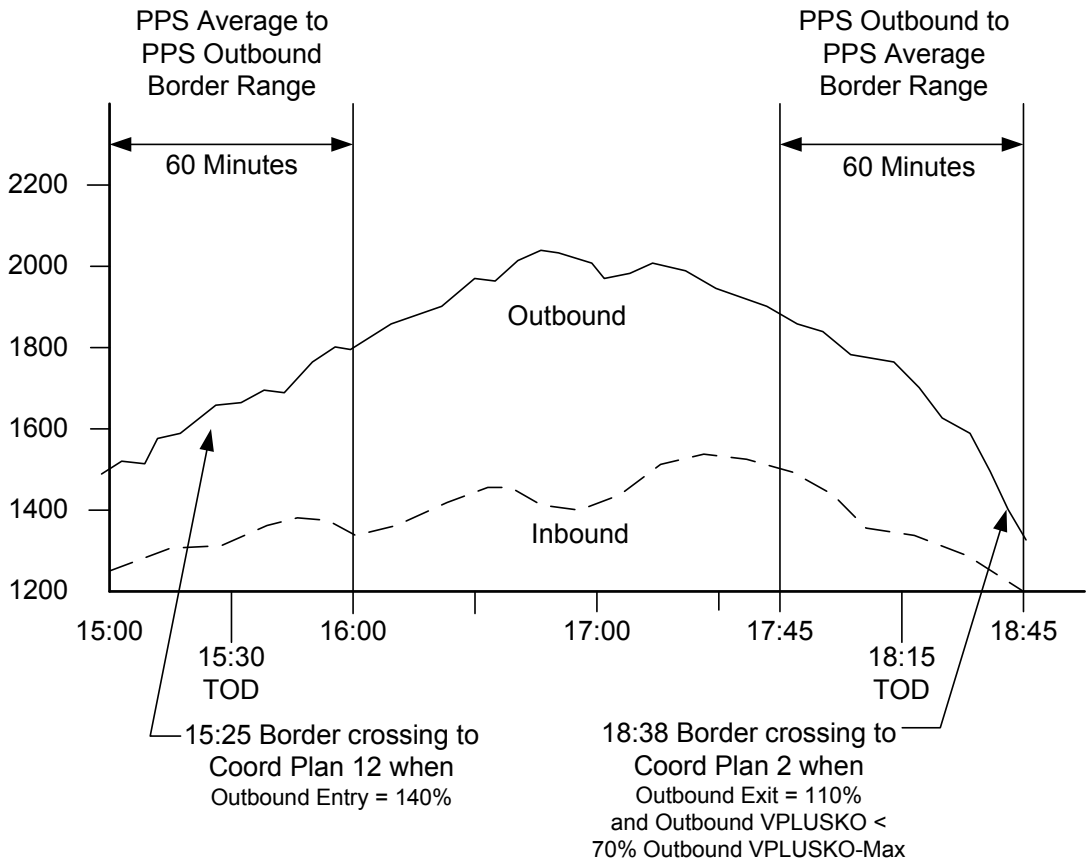

Average to Outbound Border Crossing - The PSO circuit is turned on at 15:00 which initiates a 60 minute timer. If the border crossing has not occurred before this timer times out at 16:00 the controller will select a plan based upon current VPLUSKO (see Figure 60). After the PSO circuit is turned on detector data will be accumulated for 5 minutes till 15:05. When the ratio of Outbound/Inbound VPLUSKO meets or exceeds the Outbound entry % the controller will move to one of the three Outbound plans, based on the current VPLUSKO (see Figure 60): 10, 12 or 15.

A similar operation exists for Inbound that selects one of the three Inbound plans: 3, 5 or 8.

Outbound to Average Border Crossing - The PSO circuit is turned off at 17:45 which initiates a 60 minute timer. If the border crossing has not occurred before this timer times out at 18:45 the controller will move to plan 2, Average plan 2. [Note that if TOD is calling for coord plan 1 at the border crossing the system will move to coord plan 1 instead of coord plan 2.] The change from Outbound to Average occurs when these two conditions are met.

1. The ratio of Outbound VPLUSKO divided by the Inbound VPLUSKO is equal to or less than the Outbound exit %.
2. The Outbound VPLUSKO is equal to or less than (70% * Outbound VPLUSKO-Max) for this PM period.

A similar operation exists for Inbound.

Figure 60: Effect of time on Thresholds of Internally calculated VPLUSKO

Time	Low	Medium	High
15:00	1226	1460	1694
15:05	1239	1475	1711
15:10	1252	1490	1728
15:15	1264	1505	1746
15:20	1277	1520	1763
15:25	1289	1535	1781
15:30	1302	1550	1798
15:35	1315	1565	1815
15:40	1327	1580	1833
15:45	1340	1595	1850
15:50	1352	1610	1868
15:55	1365	1625	1885
16:00	1378	1640	1902

The rate of change of the Medium VPLUSKO target from 15:00 to 16:00 is 3 VPLUSKO/minute

Outbound VPLUSKO Target = 1550

Low Threshold = Medium Threshold * .84

High Threshold = Medium Threshold * 1.16

30 minutes * 3 VPLUSKO/Min = 90

1550 - 90 = 1460 (15:00 Medium Threshold)

1550 + 90 = 1640 (16:00 Medium Threshold)

PM Cycle Length Selection - At the PM border crossing described previously the controller will choose 1 of 3 possible plans, thus 3 possible cycle lengths. This will be based on the current Outbound VPLUSKO which is tested against three thresholds: Low, Medium or High. The user sets a single threshold which is the medium threshold at the TOD change time, which in this case is 15:30. Remember that PSO was turned on at 15:00 which is 30 minutes before 15:30. From this single intercept three ranges of threshold values are created as shown in the figure above and the figure below.

Figure 61: Graph of Changing VPLUSKO Thresholds

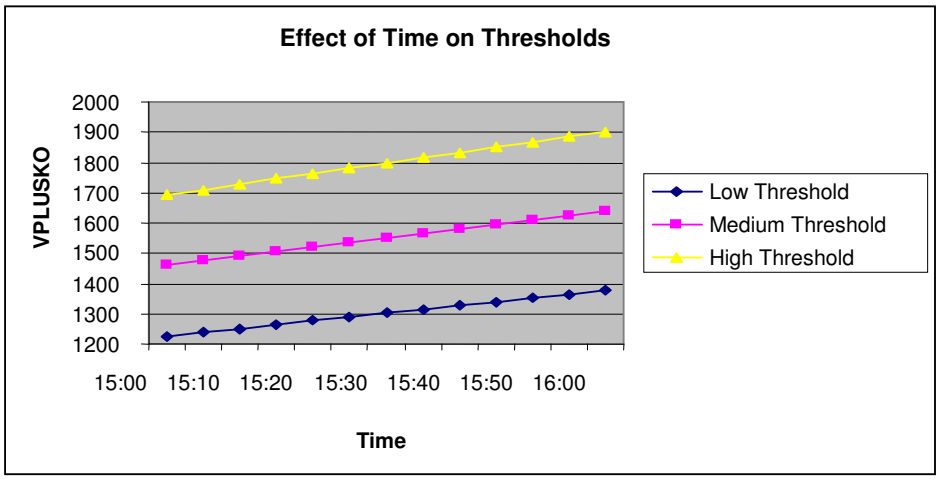

At the border crossing if the Outbound VPLUSKO is lower than the low threshold then coord plan 10, low cycle, is chosen. If the Outbound VPLUSKO is higher than the low threshold and lower than the high threshold then the coord plan 12, medium cycle, is chosen. If the Outbound VPLUSKO is higher than the high threshold then coord plan 15, high cycle, is chosen.

- Inbound VPLUSKO Target – The Inbound VPLUSKO target for medium flow at the TOD plan change time. Range: 1050 – 1800
- Outbound VPLUSKO Target – The Outbound VPLUSKO target for medium flow at the TOD plan change time. Range: 1050 – 1800

Rationale for Threshold Adjustment – The user sets the single intercept for the medium threshold at the TOD plan change time, 15:30. However at 15:05 the controller is allowed to make a cycle selection if the border crossing condition is met. In general, traffic rises in this shoulder leading up to the PM peak. Thus it is necessary to gradually increase the three thresholds as real time moves through the PM border crossing range. The adjustment to the medium VPLUSKO target is made at a fixed rate of 3 VPLUSKO/minute. The low and high threshold are derived from the medium VPLUSKO target by using a fixed 16% variance.

A similar operation exists for Inbound.

Second Look for Cycle Selection – The flow characteristics of the main street Outbound flow may change in the minutes after the border crossing to PPS Outbound, and its concomitant cycle length selection. To accommodate for this a Second Look timer is initiated at the border crossing. This timer has a fixed value of 20 minutes. When the timer times down to zero the current Outbound VPLUSKO will be tested against the current low and high thresholds to see if the correct coord plan, and thus cycle length, has been selected. As an example assume that the Outbound VPLUSKO was 1780 at 15:35 when the border crossing occurred. This value was between the low and high thresholds of 1315 & 1815 so plan 12, the medium plan was selected. At 15:55 when the Second Look timer times out the low and high thresholds are 1365 & 1885. If the Outbound VPLUSKO has risen to a value higher than 1885 then, say 1930, then coord plan 15 will be selected and the controllers in the system will move from coord plan 12 to coord plan 15.

A similar operation exists for Inbound.

Average Cycle and/or Free Selection – There are two periods when most networks and arterials run lower cycle lengths with non-directional flow. One period is from the end of the AM period to the beginning of the PM period. The second period is from the end of the PM period through midnight to the beginning of the AM period. During these average periods PPS Average can choose between two cycle lengths and Free operation. PPS Average is enabled by turning on circuit 177 (PSA).

Average Cycle Selection – After entering PPS Average an average VPLUSKO of all system detectors is calculated on a one minute basis. Note that, as described before, VPLUSKO values are smoothed. When leaving PPS Inbound or PPS Outbound the longer cycle length, plan 2, is chosen if TOD is not calling for plan 1. From plan 2 the controller will step down to plan 1, the lower cycle length, when the plan 1 threshold is reached. From plan 1 the controller will step down into Free, when the Free threshold is reached. **The ability to change between the PPS Average plans and Free is locked out for 30 minutes, after a change, to prevent frequent transitions.** So to go from Average plan 2 to Average plan 1 to Free would take a minimum of 60 minutes, i.e. two lockout periods. Once in Free then the controller will go back to plan 1, when the plan 1 threshold is reached. Once in plan 1 then the controller will go back to Plan 2, when the Plan 2 threshold is reached.

- Free Threshold (VPLUSKO) – The PPS Average VPLUSKO target for moving from Free to Plan 1. Range: 200 – 600
- Average Plan 1 Threshold (VPLUSKO) – The PPS Average VPLUSKO target for moving from Plan 2 to Plan 1, or for moving from Free to Plan 1. Range: 200 – 700
- Average Plan 2 Threshold (VPLUSKO) – The PPS Average VPLUSKO target for moving from Plan 1 to Plan 2. Range: 350 – 900

Exiting Average Operation to TOD - When the PSA circuit is turned off, the master will revert to TOD operation.

2. Non-Directional Option for Proactive Plan Selection – Some arterials and networks are non-directional but they still have AM and PM peak periods when traffic rises and then tapers off. For this type of system PPS can be used to interactively select the cycle lengths for the peak periods. The graph below shows such a system.

Figure 62: Daily Traffic Flow – Non-Directional

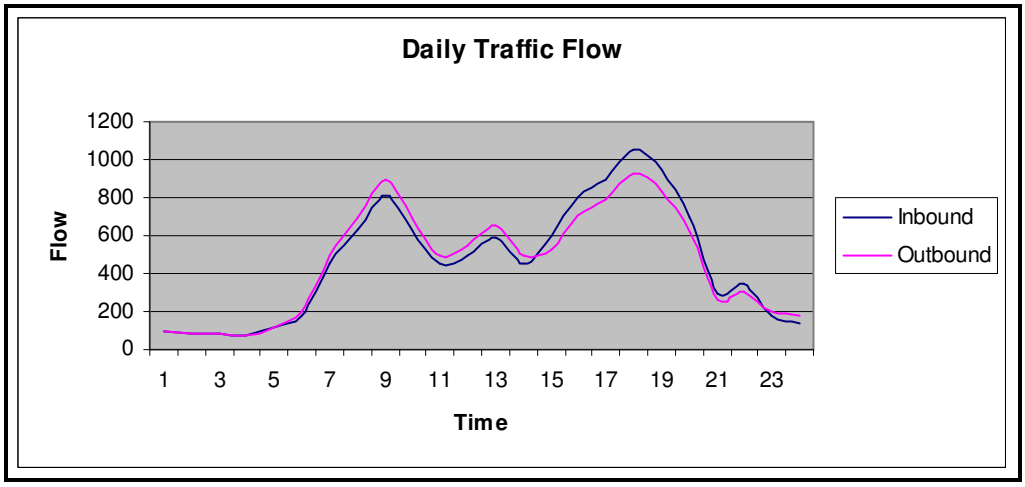

Enabling Non-Directional Border Crossing – In a typical day there are four border crossings: Entering & Exiting Inbound and Entering & Exiting Outbound. For each of these there is a triggering ratio derived from Inbound & Outbound VPLUSKO. To enable non-directional operation set these percentages to 1. The program will see this value and then utilize the non-directional crossing method.

Detectors for Non-Directional PPS – For PPS Inbound operation master system detectors 1-4 are used to create the Inbound VPLUSKO. For PPS Outbound operation master system detectors 5-8 are used to create the Outbound VPLUSKO. If the master has been in TOD operation when the PSI or the PSO circuits are turned on, then there will be a five minute period of data accumulation before plan selection can occur. Conversely if the master has been in PPS Average, it already has smoothed VPLUSKO data, and plan selection will be allowed immediately.

TOD to PPS Outbound Border Crossing – By example consider a master with the following data. From the time that the PSO circuit is turned on a 60 minute border range begins. From 15:00 to15:05 data is accumulated.

- Outbound entry: 1%
- Outbound VPLUSKO Target: 1400

- PSO Circuit on at: 15:00
- Day program calls for Coord Plan 12: 15:30

The table below shows the changing thresholds during the border range from 15:00 to 16:00. During this border range the normal TOD command at 15:30 to go to coord plan 12 will be disregarded.

Figure 63: Effect of time on Thresholds

Time	Low	Medium	High	
15:00	1100	1310	1520	Collect Volume and Occupancy Data
15:05	1113	1325	1537	Allow plan selection based on Outbound VPLUSKO once the initial data collection period has passed.
15:10	1126	1340	1554	
15:15	1138	1355	1572	
15:20	1151	1370	1589	
15:25	1163	1385	1607	
15:30	1176	1400	1624	Medium threshold target is 1400, the exit target is calculated as follows: 1400*.84 = 1176
15:35	1189	1415	1641	
15:40	1201	1430	1659	
15:45	1214	1445	1676	
15:50	1226	1460	1694	
15:55	1239	1475	1711	
16:00	1252	1490	1728	

Possible PPS Outbound entrance scenarios:

1. **Select Medium Plan** - At 15:05, after the data accumulation period, if the Outbound VPLUSKO has a value within the range of 1113-1537, select the medium coord plan (12). If the value is below 1113 stay in TOD.

2. **Select Medium Plan** - At a time after 15:05 and before 16:00, if the Outbound VPLUSKO rises to at or above the low threshold, select the medium coord plan (12).

3. **Select High Plan** – At 15:05, after the data accumulation period, if the Outbound VPLUSKO has a value at or above the high threshold (1537), select the high coord plan (15).

4. **Select Low Plan** – At 16:00, at the end of the border range, if the Outbound VPLUSKO is below the low threshold (1252), select the low coord plan (10).

PPS Outbound to PPS Average Border Crossing – This description continues with the same example that was used to show entrance into PPS Outbound.

- PSO circuit off and PSA circuit on: 17:45
- Day program calls for Coord Plan 2: 18:15
- Exit PPS Outbound Target (from calculation shown on preceding table): 1176

At 17:45 a border range will be initiated that extends to 18:45. The smoothed VPLUSKO values are currently available because they are continually calculated when the PSO circuit is on. The master will change to coord plan 2 when the Outbound VPLUSKO drops to or below 1176. 1176 is calculated by reducing the medium VPLUSKO target by 16%. During this border range the normal TOD command at 18:15 to go to coord plan 2 will be disregarded. If the Outbound VPLUSKO has not fallen to or below 1176, at the end of the border range (18:45), the master will move to coord plan 2.

3. Proactive Plan Selection in conjunction w/ Split Variant Operation – Combining these two coordination methods can create a highly responsive coordination system. The time to move into and out of peak period operation and the cycle length chosen are controlled by Proactive Plan Selection. Once a coord plan is chosen for the peak period then its split can be changed, on a four minute basis, by Spit Variant Operation. This joint operation will be the basis of the discussion in this section.

This joint operation could be made even more flexible by adding Dynamic Phase Length and Actuated Coordination.

16 Coord Plans for Proactive Plan Selection w/ Split Variant Operation

The table below shows the 16 coord plans that form the basis of PPS/SVO. The plan numbers shown must be used. The cycle lengths are user settable. There are two Average plans 1 & 2. There are three PPS inbound plans (3, 5 & 8) and three PPS outbound plans (10, 12 & 15). Four of the PPS plans (5, 8, 12 & 15) also SVO plans. Consider PPS inbound plan 8. Plan 8 has two adjacent SVO plans, 7 & 9. If PPS Inbound selects plan 8 then on a four minute basis the system can move between plans 7, 8 & 9 to utilize different splits. If PPS Outbound selects the light plan (10) SVO will not operate because there are no SVO plans associated with coord plan 10.

Figure 64: Coord Plans for PPS w/ SVO

Coord Plans & Descriptions						
Plan #	Direction	Cycle Sec.	TOD Default	Proactive Plan	Split Variant Operation Main Flow	Description
1	Ave	60	Yes	2	n/a	Late night TOD or Midday light
2	Ave	75	Yes	2	n/a	TOD midday
3	In	80		3	n/a	Inbound light flow
4	In	90		5	light	Inbound medium, light SVTR flow
5	In	90	Yes	5	medium	Inbound medium, medium SVTR flow
6	In	90		5	heavy	Inbound medium, heavy SVTR flow
7	In	100		8	light	Inbound heavy, light SVTR flow
8	In	100		8	medium	Inbound heavy, medium SVTR flow
9	In	100		8	heavy	Inbound heavy, heavy SVTR flow
10	Out	90		10	n/a	Outbound light flow
11	Out	100		12	light	Outbound medium, light SVTR flow
12	Out	100	Yes	12	medium	Outbound medium, medium SVTR flow
13	Out	100		12	heavy	Outbound medium, heavy SVTR flow
14	Out	110		15	light	Outbound heavy, light SVTR flow
15	Out	110		15	medium	Outbound heavy, medium SVTR flow
16	Out	110		15	heavy	Outbound heavy, heavy SVTR flow

The previous TOD day program has been modified with the addition of the four commands needed to add SVO to PPS. At the beginning of the PPS Inbound entrance border range, 06:00, the SV Inbound circuit is turned on. This circuit is then turned off at the end of the PPS Inbound exit border range, 09:45. At the beginning of the PPS Outbound entrance border range, 15:00, the SV Outbound circuit is turned on. This circuit is then turned off at the end of the PPS Outbound exit border range, 18:45. These wide range of times for Split Variant Operation allow it to be available at any time that Proactive Plan Selection has called a compatible coord plan; 5, 8, 12 or 15.

Figure 65: Coord Plans for PPS w/ SVO

Entry	Day Plan	Time	Coord Plan	Coord Plan Or Circuit		State On(x) Or Off
1	1	06:00		177	PSA	
2	1	06:00		178	PSI	X
3	1	06:00		180	SVI	X
4	1	06:30	5			
5	1	08:45		177	PSA	X
6	1	08:45		178	PSI	
7	1	09:15	2			
8	1	09:45		180	SVI	
9	1	15:00		177	PSA	
10	1	15:00		179	PSO	X
11	1	15:00		181	SVO	X
12	1	15:30	12			
13	1	17:45		177	PSA	X
14	1	17:45		179	PSO	
15	1	18:15	2			
16	1	18:45		181	SV0	

System Programming Screens

To make changes to System programming, bring up the MAIN MENU display by pressing the **NEXT** key.

```
                --MAIN MENU--

        1.RUN MODE        3.UTILITIES

        2.PROGRAM MODE

        -- AUX Switch ON = Stop Time --
            --USE F KEY FOR HELP--
```

Select 2. **PROGRAM MODE**

```
            --PROGRAM MODE MENU--

1.SECURITY CODE  5.PREEMPTION     8.I/O
2.CONTROLLER     6.COMM/REPORT      CONFIG
3.COORDINATION   7. TRANSIT       9.INTERNAL
4.TIME CLOCK        PRIORITY        LOGIC
                                  0.SYSTEM
```

Note: The selection “0.System” is only displayed if the controller has been programmed to operate in system mode “2”. See the chapter on Communications and Reports.

Select 0. **SYSTEM**

```
            --PROGRAM MODE MENU--

1.LOCAL ENABLES
2.MASTER SYSTEM DETECTORS
3.PROACTIVE PLAN SELECTION
4.SPLIT VARIANT OPERATION
5.MASTER LOG ENABLES
```

Select 1. **LOCAL ENABLES**

```
1=POLLED                SYSTEM LOCALS
                 1  2  3  4  5  6  7  8  9 10
ENABLED          1  1  1  1  1  1  1  0  0  1
                11 12 13 14 15 16 17 18 19 20
ENABLED          1  1  0  0  0  0  0  0  0  0
                21 22 23 24 25 26 27 28 29 30
ENABLED          0  0  0  0  0  0  0  0  0  0
         -- PGDN(A)/UP(B) FOR MORE --
```

This menu screen instructs the master controller to poll all of the local controllers on the system that are enabled (0 = off, 1 = polling is enabled). Polling takes place at least once per minute under normal communication conditions. The polled

information can then be displayed on the master controller's S*ystem* run screens or on a PC with NWSCentral and running the Local Status Display.

Press the **A** key (Advance) to see the enables for the remaining local intersections.

```
1=POLLED                SYSTEM LOCALS
                 31 32  33 34 35  36 37  38 39  40
ENABLED           0  0   0  0  0   0  0   0  0   0
                 41 42  43 44 45  46 47  48  49  50
ENABLED           0  0   0  0  0   0  0   0  0   0
```

The master controller itself should be enabled if it is both serving as a master AND controlling a local intersection. It does not need to be enabled in the rare case that it is not controlling a local intersection, but simply acting as a communications hub.

Page Down (**A**) to program **MASTER SYSTEM DETECTORS**

```
    --MASTER SYSTEM DETECTOR MAPPING--
MAST DET  1   2   3   4   5   6   7   8
LOCAL #   3   3   2   2   1   1   2   2
SYS DET   1   2   3   4   1   2   1   2

MAST DET  9  10  11  12  13  14  15  16
LOCAL #   0   0   0   0   0   0   0   0
SYS DET   0   0   0   0   0   0   0   0
```

This menu screen is used to program the master system detectors. Each master system detector that is to be brought back to the master during polling needs to be identified. The identification is based on two pieces of data.

LOCAL # - This is the intersection number of the controller where the detector is located. This is one of 50 possible intersections in the system. The intersection must be enabled for polling.

SYS DET - This is the system detector number of the detector, at the local intersection. This is one of 8 possible system detectors at the intersection.

By example, in the screen above master system detector #8 is located at intersection #2, where it is system detector #2. There are 16 possible master system detectors. System modes Split Variant Operation and Proactive Plan Selection use master system detectors 1-8. *Note: Master System Detectors 9-16 are available for other uses, such as Platoon Progression, count stations, etc.*

Page Down (**A**) to program **PROACTIVE PLAN SELECTION**

```
        --PROACTIVE PLAN SELECTION--
                      INBOUND   OUTBOUND
        ENTRY %         150        140
          EXIT %        110        110
VPLUSKO TARGET         1400       1550
        FREE      CRD PLAN 1  CRD PLAN 2
AVG THR 400             520        650
TOD CKTS 177-179= Avg/Inb/Outb to Enable
```

This menu screen is used to set the operating parameters for Proactive Plan Selection. For Inbound and Outbound operation there are three parameters.

INBOUND ENTRY % - This is the ratio of Inbound VPLUSKO divided by the Outbound VPLUSKO that must be met or exceeded before moving into PPS Outbound. A value of (1) enables a non-directional mode that uses absolute Inbound VPLUSKO instead of a ratio of Inbound/Outbound. Range: 110-160, 1

INBOUND EXIT % - This is the value of that the ratio of Inbound VPLUSKO divided by the Outbound VPLUSKO that must be at or below before moving out of PPS Inbound. A value of (1) enables a non-directional mode that uses absolute Inbound VPLUSKO instead of a ratio of Inbound/Outbound. Range: 90-140, 1

INBOUND VPLUSKO TARGET - This is the target value of Inbound VPLUSKO for selecting the medium coord plan 5. This value is progressively adjusted during the 60-minute Inbound entrance border range. Range: 1050-1800

OUTBOUND ENTRY % - This is the ratio of Outbound VPLUSKO divided by the Inbound VPLUSKO that must be met or exceeded before moving into PPS Outbound. A value of (1) enables a non-directional mode that uses absolute Outbound VPLUSKO instead of a ratio of Outbound/Inbound. Range: 110-160, 1

OUTBOUND EXIT % - This is the value of that the ratio of Outbound VPLUSKO divided by the Inbound VPLUSKO that must be at or below before moving out of PPS Outbound. A value of (1) enables a non-directional mode that uses absolute Outbound VPLUSKO instead of a ratio of Outbound/Inbound. Range: 90-140, 1

OUTBOUND VPLUSKO TARGET - This is the target value of Outbound VPLUSKO for selecting the medium coord plan 12. This value is progressively adjusted during the 60-minute Outbound entrance border range. Range: 1050-1800

During PPS Average operation there are three thresholds that are used for moving to Average plan 1, Average plan 2 & Free.

FREE THRESHOLD (VPLUSKO) - This is the target value of PPS Average for selecting the Free. Range: 200 - 600

AVERAGE PLAN 1 THRESHOLD (VPLUSKO) - This is the target value of PPS Average for selecting the Average plan 1. Range: 200 - 700

AVERAGE PLAN 2 THRESHOLD (VPLUSKO) - This is the target value of PPS Average for selecting the Average plan 2. Range: 350 - 900

Page Down (**A**) to program **SPLIT VARIANT OPERATION**

```
          --SPLIT VARIANT OPERATION--
      5->4        4->5        6->5        5->6
       950        1250        1400        1600

      8->7        7->8        9->8        8->9
      1150        1400        1550        1800
-TOD CKTS 180-181= Inb/Outb to Master DETS-
Value: 800-3000 -PGDN(A)/UP(B) FOR MORE-
```

Page Down (**A**) to continue programming **SPLIT VARIANT OPERATION**

```
          --SPLIT VARIANT OPERATION--
    12->11      11->12      13->12      12->13
       800        1180        1290        1535

    15->14      14->15      16->15      15->16
       990        1210        1460        1660
-TOD CKTS 180-181= Inb/Outb to Master DETS-
Value: 800-3000 -PGDN(A)/UP(B) FOR MORE-
```

These menu screens are used to set the operating thresholds for Split Variant Operation (SVO). The figure below shows the four sets of SVO plans in rows. At any one time SVO would be shifting between the three coord plans in one row. For example if PPS or TOD is calling for coord plan 5, the SV Inbound circuit is on then SVO would be shifting between coord plans 4, 5 & 6.

Figure 66: Coord Plans for PPS w/ SVO

Light Coord Plan	Medium Coord Plan	Heavy Coord Plan	Direction
4	5	6	Inbound
7	8	9	
11	12	13	Outbound
14	15	16	

The thresholds and there actions are summarized in the table below. Consider the coord plan 4, 5 & 6 inbound group. To move from coord plan 5 (Medium) to coord plan 4 (Light) the Inbound VPLUSKO has to fall to 950 or lower. To move from coord plan 4 (Light) to coord plan 5 (Medium) the Inbound VPLUSKO has to rise to 1250 or higher.

Figure 67: Coord Plans for PPS w/ SVO

Theoretical Example of Data Entry Thresholds for Split Variant Operation					
Plan Movement	VPLUSKO Threshold		Plan Movement	VPLUSKO Threshold	
5 to 4	950	Inbound 90	12 to 11	800	Outbound 100
4 to 5	1250		11 to 12	1180	
6 to 5	1400		13 to 12	1290	
5 to 6	1600		12 to 13	1535	
8 to 7	1150	Inbound 100	15 to 14	990	Outbound 110
7 to 8	1400		14 to 15	1210	
9 to 8	1550		16 to 15	1460	
8 to 9	1800		15 to 16	1660	

Page Down (**A**) to program **MASTER LOGS ENABLE & DISABLE**

```
        --MASTER LOGS ENABLE/DISABLE--

PLATOON PROGRESSION:      1<|0 = OFF
 PROACTIVE PLAN-            |1 = ENABLED
          SPLIT VARIANT:     0 |
-The logs are retrieved by request only-
-The logs are intended for diagnostics
          --PGDN(A)/UP(B) FOR MORE--
```

PLATOON PROGRESSION – Setting this value to (1) will enable the Platoon Progression diagnostic log. Use of this log is essential during bench testing, initial on-street operation and periodic fine tuning. These logs are further described in the System – Run section of this manual.

PROACTIVE PLAN – SPLIT VARIANT – Setting this value to (1) will enable a diagnostic log that records operational data for both Proactive Plan Selection & Split Variant Operation. Use of this log is essential during bench testing, initial on-street operation and periodic fine tuning.

This page left intentionally blank.

Utilities
Utilities Programming Screens

To use the Utilities screens, first bring up the **MAIN MENU** by pressing **NEXT**

```
--MAIN MENU--

1.RUN MODE        3.UTILITIES

2.PROGRAM MODE

-- AUX Switch ON = Stop Time --
--USE F KEY FOR HELP--
```

Select 3. **UTILITIES**

```
--UTILITIES PROGRAMMING MENU--

1.DATABASE BACKUP LOAD    5.RESTART UNIT
2.DATABASE CLEAR LOAD     6.DATAKEY BACKUP
3.COPY DATABASE AREAS     7.OUTPUT TESTING
4.INTERSECTION              (Must Be In
  NAME                       Soft Flash)
```

To load a default database, select 1. **DATABASE BACKUP LOAD**

```
--DATABASE BACKUP LOAD--

1.CONTROLLER
2.COORDINATION
```

Select 1. to load backup data for the **CONTROLLER**

```
--THE CONTROLLER PLAN TO BE USED IS--

2.2 PHASE SEQUENTIAL     5.5 PHASE DUAL RING
3.3 PHASE SEQUENTIAL     6.6 PHASE DUAL RING
4.4 PHASE SEQUENTIAL     8.8 PHASE DUAL RING
```

The 6 options of controller default data load will load a particular sequence with the number of phases requested. The 1st table below shows the sequence and phases used for each of the 6 options. The 2nd table shows the actual phase time settings for option 8 (8 Phase DualRing).

Default Database Option	Sequence	Phases Used
8	1	1,2,3,4,5,6,7,8
6	1	1,2,3,4,5,6
5	1	1,2,4,5,6
4	0	1,2,3,4
3	0	1,2,3
2	0	1,2

	Phase Times							
	1	2	3	4	5	6	7	8
Min Green	3	10	3	8	3	10	3	8
Passage	2.0	3.0	2.0	2.0	2.0	3.0	2.0	2.0
Red Clearance	1.0	1.0	1.0	1.0	1.0	1.0	1.0	1.0
Max 1	30	60	30	30	30	60	30	30
Max 2	30	60	30	30	30	60	30	30
Walk	0	7	0	7	0	7	0	7
Ped Clear	0	15	0	15	0	15	0	15
Sec. Per Actuation	0.0	0.0	0.0	0.0	0.0	0.0	0.0	0.0
Time Before Reduction	0	0	0	0	0	0	0	0
Time To Reduce	0	0	0	0	0	0	0	0
Min Gap	0.0	0.0	0.0	0.0	0.0	0.0	0.0	0.0
Max Variable Initial	0	0	0	0	0	0	0	0
Max Extend	0.0	0.0	0.0	0.0	0.0	0.0	0.0	0.0
Auto Max	0	0	0	0	0	0	0	0

Select 2. to load backup data for **COORDINATION**

```
--THE COORDINATION PLAN TO BE USED IS--

2.2 PHASE SEQUENTIAL     5.5 PHASE DUAL RING
3.3 PHASE SEQUENTIAL     6.6 PHASE DUAL RING
4.4 PHASE SEQUENTIAL     8.8 PHASE DUAL RING
```

The coordination default data load will load coord plans 1-3 tailored to each of the 6 options. It will also set the coord modes to a default condition. The table below shows the single setting of coord modes used for each of the 6 options.

Coordination Parameters	
Flash Mode	33
Coordination Plan Mode	33
Offset Seeking Mode	2
Late Ped	0
Coord Walk Rest	0
Zero Mode	0
Repeated Phase Service	0

The following tables show coord plans 1-3 for each of the 6 default database load options.

8 Phase Dual Ring										
Coord Plan	Coord Ph.		Yield Point							
	Ring 1	Ring 2	Ring 1	Ring 2	Cycle Length	Offset	Permissive	Minimum Cycle	Service Plan	Max Plan
1	2	6	0	0	90	0	0	0	0	0
2	2	6	0	0	100	0	0	0	0	0
3	2	6	0	0	110	0	0	0	0	0

Coord Plan	Split Times (s)							
	1	2	3	4	5	6	7	8
1	12	32	19	27	12	32	19	27
2	15	35	20	30	15	35	20	30
3	16	40	21	33	16	40	21	33

6 Phase Dual Ring										
Coord Plan	Coord Ph.		Yield Point							
	Ring 1	Ring 2	Ring 1	Ring 2	Cycle Length	Offset	Permissive	Minimum Cycle	Service Plan	Max Plan
1	2	6	0	0	90	0	0	0	0	0
2	2	6	0	0	100	0	0	0	0	0
3	2	6	0	0	110	0	0	0	0	0

Coord Plan	Split Times (s)							
	1	2	3	4	5	6	7	8
1	12	32	19	27	12	32	0	0
2	15	35	20	30	15	35	0	0
3	16	40	21	33	16	40	0	0

5 Phase Dual Ring										
Coord Plan	Coord Ph.		Yield Point							
	Ring 1	Ring 2	Ring 1	Ring 2	Cycle Length	Offset	Permissive	Minimum Cycle	Service Plan	Max Plan
1	2	6	0	0	90	0	0	0	0	0
2	2	6	0	0	100	0	0	0	0	0
3	2	6	0	0	110	0	0	0	0	0

Coord Plan	Split Times (s)							
	1	2	3	4	5	6	7	8
1	15	40	0	35	15	40	0	0
2	17	45	0	38	17	45	0	0
3	20	50	0	40	20	50	0	0

4 Phase Sequential										
Coord Plan	Coord Ph.		Yield Point							
	Ring 1	Ring 2	Ring 1	Ring 2	Cycle Length	Offset	Permissive	Minimum Cycle	Service Plan	Max Plan
1	2	0	0	0	90	0	0	0	0	0
2	2	0	0	0	100	0	0	0	0	0
3	2	0	0	0	110	0	0	0	0	0

Coord Plan	Split Times (s)							
	1	2	3	4	5	6	7	8
1	12	32	19	27	0	0	0	0
2	15	35	20	30	0	0	0	0
3	16	40	21	33	0	0	0	0

3 Phase Sequential										
Coord Plan	Coord Ph.		Yield Point							
	Ring 1	Ring 2	Ring 1	Ring 2	Cycle Length	Offset	Permissive	Minimum Cycle	Service Plan	Max Plan
1	2	0	0	0	80	0	0	0	0	0
2	2	0	0	0	90	0	0	0	0	0
3	2	0	0	0	100	0	0	0	0	0

Coord Plan	Split Times (s)							
	1	2	3	4	5	6	7	8
1	15	30	35	0	0	0	0	0
2	20	35	35	0	0	0	0	0
3	22	40	38	0	0	0	0	0

2 Phase Sequential										
Coord Plan	Coord Ph.		Yield Point							
	Ring 1	Ring 2	Ring 1	Ring 2	Cycle Length	Offset	Permissive	Minimum Cycle	Service Plan	Max Plan
1	2	0	0	0	70	0	0	0	0	0
2	2	0	0	0	80	0	0	0	0	0
3	2	0	0	0	90	0	0	0	0	0

Coord Plan	Split Times (s)							
	1	2	3	4	5	6	7	8
1	35	35	0	0	0	0	0	0
2	37	43	0	0	0	0	0	0
3	40	50	0	0	0	0	0	0

Loading any CONTROLLER PLAN will only place default data in the Controller section. Likewise, loading any COORDINATION PLAN will only place default data in the Coordination section. To load a plan, press the number which corresponds to the desired phase configuration.

To initiate a sequence change, the controller must go through re-initialization (cycling power off/on, keyboard restart, external start, monitor status or flash exit). Alternatively, a sequence change can be initiated by using the Change Sequence command (Main Menu/2/2/7/6).

Backup data is not intended to be used for street operation, it provides the user with a fast and easy way to program the controller for bench testing or training.

To clear out an existing database from the **UTILITIES PROGRAMMING MENU**
Select 2. **DATABASE CLEAR LOAD**

```
        --CLEAR DATABASE LOAD--
1.CONTROLLER =          5.COMMUNICATIONS/
  QUAD LEFT TURN          REPORT/INTERNAL
2.COORDINATION            LOGIC/INT NAME/
3.TIME CLOCK              I/O=DEFALUT,
4.PRE-EMPTION             TRANSIT PRIORITY
                        6.CLEAR ALL
```

There is a choice for clearing each of the five major sections of the database.

1. **(1)** Clears the Controller section of the database only by loading the backup data for an eight phase, quad left turn sequence.

2. **(2)** Clears out the Coordination section of the database.

3. **(3)** Clears out data in the Time Clock section and sets all of the time clock circuits to TOD mode.

4. **(4)** Clears out all preemption programming.

5. **(5)** Clears all of the remaining sections of programming to default values. *Note:* this will terminate communications.

6. **(6)** Clears the entire database. *Note:* this will terminate communications.

To copy a portion of the database from one area to another, from the **UTILITIES PROGRAMMING MENU**
Select 3. **COPY DATABASE AREAS**

```
    --COPY DATABASE AREA FUNCTIONS--

1.CONTROLLER          3.TIME CLOCK
2.COORDINATION        4.PREEMPTION
```

Select the section of the database containing the source and destination of the copied data

```
--CONTROLLER DATABASE COPY FUNCTIONS--

  1.COPY PHASE 1 TO PHASES 2-8
  2.COPY PHASE 1 TO PHASES 3, 5, 7,
       AND PHASE 2 TO PHASES 4, 6, 8
  3.COPY NORMAL TIMES TO SERVICE/MAX
       PLANS 1-8
```

The use of copy functions is self explanatory with one minor exception. When copying Normal Times to Service/Max Plans, the normal Max 1 times are loaded into the Normal Max Plan times and 80% of the normal Max 1 times are loaded into Failed Max Plan times.

Other copy screens resemble the screens below:

```
--COORDINATION DATABASE COPY FUNCTIONS--

  1.COPY PLAN 1 TO PLANS 2-32
  2.COPY PLANS 1-4 TO PLANS 5-32
```

```
--TIME CLOCK DATABASE COPY FUNCTIONS--

  1.COPY DAY PROGRAM 1 TO DAY PROGS 2-8
  2.COPY DAY PROGS 1-4 TO DAY PROGS 5-8
```

```
--PREEMPTION DATABASE COPY FUNCTIONS--

  1.COPY PREEMPT 1 TO 2-8
  2.COPY PREEMPT 1-4 TO PREEMPT 5-8
```

To change the name of the intersection, from the **UTILITIES PROGRAMMING MENU**
Select 4. **INTERSECTION NAME**

```
            --INTERSECTION NAME--
        Press 'C' to clear intersection name.
INTERSECTION NAME:
 5 - 181ST AT MULTNOMAH WAY
                            ^
ABCDEFGHIJKLMNOPQRSTUVWXYZ
0123456789            .-#&'/,()*;
        Press 'D' to select special character
```

This screen has two main areas: The 4th row is the intersection name. Rows 6 & 7 are a Character List that can be used when constructing the intersection name.

To enter or edit the name of the intersection do the following.

1. Move the cursor to space below the character position in the intersection name that is to be entered or edited.

2. Press **D** which will place an asterisk to the right of the letter A in the Character List as shown in the screen below.

```
            --INTERSECTION NAME--
        Press 'C' to clear intersection name.
INTERSECTION NAME:
 5 - 181ST AT MULTNOMAH WAY
                            ^
A*CDEFGHIJKLMNOPQRSTUVWXYZ
0123456789            .-#&'/,()*;
        Press 'D' to select special character
```

3. At this point pressing **D** would place the letter **A** at the position of the cursor. However it is likely a different character is desired.

4. To select a different character use the arrow keys to move the asterisk to the right of the character that is desired. Then press **D** which will place this character at the position of the cursor.

5. Continue this process until the name is completed.

TS2 Port 1 Status Screens

The TS2 Port 1 Status screens are available directly from the Main Menu to provide quick access to this important information. When the controller is turned on, the Basic Status Run Mode display is the initial display that appears.

```
                                        |
                                        |
PHASE/OL 1  2  3  4  5  6  7  8   A B C D|CYCLE
SP0       r  r  r  W  r  r  r  W   r  r  r  r|       0
RING1                |RING2                |FREE
MIN   3   WLK    1 | MIN   3   WLK    1  |       0
                     |                    |MASTER
MX1  24              | MX1  24            | 1     0
```

Select **NEXT** key to go to the Main Menu

```
                --MAIN MENU--

     1.RUN MODE          3. UTILITIES

     2.PROGRAM MODE

        -- AUX Switch ON = Stop Time --
           --USE F KEY FOR HELP--
```

This is how the Main Menu appears when the controller is loaded with default data or when the controller is not programmed to run in a TS2 cabinet. A fourth menu selection, TS2 Port 1 Status, becomes visible when TS2 communications are enabled in the controller (specifically, when the Bus Interface Unit (BIU) or MMU assignments are completed and the controller is restarted). See the chapter on Program Mode Screens for more information. Assuming that the BIU's are assigned, the Main Menu will look like this:

```
                --MAIN MENU--

     1.RUN MODE          3. UTILITIES

     2.PROGRAM MODE    4. TS2 PORT 1 STATUS

        -- AUX Switch ON = Stop Time --
           --USE F KEY FOR HELP--
```

Before selecting option "4" on the Main Menu and proceeding to TS2 Port 1 Status, it may be useful to take a moment to verify that the proper version of Voyage is loaded into the 2070 controller.

Select **ESC** key to go to the copyright display

```
2070ATC  PGM:  IDTS2  ver.01.02.00  03JAN2005

       NORTHWEST SIGNAL SUPPLY, INC.

COPYRIGHT  2002-2005,  ALL RIGHTS RESERVED

INTERSECTION:
 7 - Ex. #4 Min @ 3rd
```

Press **'F'** from this screen to see a series of text screens that show the major changes in each version of Voyage going all the way back to version 01.00.00.

Return to the Main Menu by pressing the **NEXT** key and then select 4, **TS2 Port 1 Status**.

```
          --TS2 PORT 1 STATUS MENU--

 1.BIU/MMU COMM STATUS    3. MMU STATUS

 2.MMU PROGRAMMING        4. TS2 PORT 1 LOG
```

Select 1: **BIU/MMU COMM STATUS.**

```
TS2 PORT 1 COMM STATUS

BIU  1     2     3     4     9     10    11    12
     A     A     N     N     A     N     N     N

 MMU COMMAND FRAME:          3     0     1
                             A     A     A
 N= Not Used,   M=Marginal,   L=Lost,   A=Active
```

Page down (A) to view the **Minimum Yellow Disable** programming in the MMU and other settings.

```
MINIMUM YELLOW DISABLE
                                 1 1 1 1 1 1 1
CHANNELS 1 2 3 4 5 6 7 8 9 0 1 2 3 4 5 6
 X = DIS        X        X            X   X

 MINIMUM POWER UP FLASH:  1 SECONDS
 24 VOLT LATCH:  N    CVM/FVM LATCH:  N
   --PGDN (A) FOR COMPATIBILITY JUMPERS--
```

The values shown on the Minimum Yellow Disable screen are from the actual programming on the jumper card in the MMU. They can only be changed by relocating the solder jumpers on the card.

Page down (A) to view the **MMU Compatibility** programming.

```
MMU COMPATIBILITY           1 1 1 1 1 1 1
CHANNELS 1 2 3 4 5 6 7 8 9 0 1 2 3 4 5 6
      1            X X         X
      2            X X     X   X
      3                X X       X
      4                X X   X   X
      5    X X             X
   -- Use "+" Key To View CU Compatibility --
```

The MMU Compatibility screens show the actual programming of the jumper card in the MMU. It can only be changed by relocating the solder jumpers on the card. The MMU Compatibility programming must match the CU Compatibility programming if the MMU Compatibility Check function is enabled (see the TS2 Port 1 Options programming screen). If they do not match the intersection will be put into flashing operation.

Page down (A) to view more MMU compatibility programming.

```
MMU COMPATIBILITY           1 1 1 1 1 1 1
CHANNELS 1 2 3 4 5 6 7 8 9 0 1 2 3 4 5 6
      6    X X             X   X
      7        X X           X
      8        X X           X   X
      9      X     X X         X
      10         X     X X       X
  -- Use "+" Key To View CU Compatibility --
```

Page down (A) to view yet more MMU compatibility programming.

```
MMU COMPATIBILITY           1 1 1 1 1 1 1
CHANNELS 1 2 3 4 5 6 7 8 9 0 1 2 3 4 5 6
      11   X X       X     X
      12       X X       X   X
      13
      14
      15
  -- Use "+" Key To View CU Compatibility --
```

To view the channel compatibility in the Controller Unit (CU), press the “+” key. The following screen will be displayed:

```
CU COMPATIBILITY                1 1 1 1 1 1 1
CHANNELS 1 2 3 4 5 6 7 8 9 0 1 2 3 4 5 6
      11   X X       X     X
      12       X X       X   X
      13
      14
      15
 -- Use “-” Key To View MMU Compatibility --
```

CU Compatibility is set automatically in the CU when a particular sequence is selected. See the WA03 Operating Manual for information on programming sequences.

Page down (A) to view the **MMU Status**.

```
MMU STATUS




        --PGDN (A) FOR CHANNEL ACTIVITY--
```

The MMU Status screen will display the most recent status message sent from the MMU to the CU via a response frame. Possible messages include; “Conflict”, “Red Failure”, “MMU Diagnostic Failure”, “Minimum Clearance Failure”, “Port 1 Timeout Failure”, “Local Flash Status”, and “Start-up Flash Call”.

Page down (A) to view the **MMU Channel Activity**.

```
MMU                             1 1 1 1 1 1 1 1
CHANNELS  1 2 3 4 5 6 7 8 9 0 1 2 3 4 5 6
  RED/DW  R   R R R   R R D   D   R R R R
 YEL/PCLR                     P   P
GRN/WALK    G       G


       --Use “+” Key To View CU Channels--
```

The MMU Channel Activity screen displays the current interval in each channel. Possible intervals are Red (R), Don’t Walk (D), Yellow (Y), Ped Clearance (P), Green (G), Walk (W) and Unknown Interval (X).

Press the **ESC** key to return to the TS2 Port 1 Status Menu. Select 4 to view the **TS2 PORT 1 LOG**.

```
TS2 PORT 1:     ALL/1/2:    0   LOG ENTRY:   16
RECORDS STORED:  16    ENTER 0 TO CLR LOG
DATE: 01/13/05     TIME: 10:41:06
BIU  1     2     3     4     9     10    11    12
                           L
   MMU FRAME: 3     0     1     CFF   CMF

   - "  " = N/U or No Fail,  L=Lost  X=Failure -
```

The controller can store up to 20 TS2 Port 1 Log entries. The log will report lost or failed communication to the BIU's and/or the MMU and also any compatibility check failures (CCF) or channel match failures (CMF). The example above shows lost communications (i.e. no response frame) from BIU #9.

Programming Charts

The following pages contain blank programming charts which can be used as a tool to assist in developing controller data sets. These charts can also be printed directly from NWSCentral.

Intersection Name			Address	
Intersection Telephone Number				
System Name			Address	
Controller Type				
Controller Serial Number			Installation Date	
Programmed by			Programmed Date	
Graphic Map Background				

Control Data

Controller Function and Timing

Security, Sequence, Initialization

Security Code		0 = disabled, or 1000-9999	First All Red		0.0 to 25.5 seconds
Sequence		0 = sequential, 1 = quad left turn, 2-6 = special A-E, 7 = lead lag			

Initialization			Lead Lag			
Ring 1	Ring 2	Interval	Phases 1 - 2	Phases 3 - 4	Phases 5 - 6	Phases 7 - 8
Phase 1 - 8		0 = Red, 1 = Yel, 2 = Grn	0 = no reversal, 1 = reversal, 2 = by coord plan or clock			

Per Phase Functions

	1	2	3	4	5	6	7	8	
Phases Used									X = on
Restricted Phases									
Yellow Lock									
Min Recall									
Max Recall									
Ped Recall									
Red Lock									
Max Out Recall Inhibit									
Soft Recall									
Free Walk Rest									
Conditional Ped									
Disable Inhibit Max Termination									

Dual Entry

Mode		0 = off, 1 = on, 2 = Not Used, 3 = by coord plan, 4 = by time clock circuit 61

Dual Entry Phase -->	**1**	**2**	**3**	**4**	**5**	**6**	**7**	**8**	
Phase									0 = none, 1-8 = phase 1-8

Conditional Service, Five Section Head

Conditional Service			**5 Section Head Logic**						
					Anti-Trap			**Yellow Blanking LT**	
	Mode	**CS Max Time**	**X Omits Y**						
Phase 1			**X : Y**		**Trap Protected Phase**		**Next Phase**	**Phase**	
Phase 3			**6 : 1**		**1**		**< (5)**	**1**	
Phase 5			**8 : 3**		**3**		**< (7)**	**3**	
Phase 7			**2 : 5**		**5**		**< (1)**	**5**	
0 = off, 1 = C.S.On. 2 = C.S. on by TOD circuit 57, 3 = N/A, 4 = C.S. and C.R. On, 5 = C.R. on by TOD circuit 57.			**4 : 7**		**7**		**< (3)**	**7**	
			0=off, 1=side call, 2=no side call		X = On				

Phase Times

	1	**2**	**3**	**4**	**5**	**6**	**7**	**8**	
Movement									
Minimum Green									0 - 255 sec.
Passage									0.0 - 25.5 sec.
Yellow									0.0 - 25.5 sec.
Red Clearance									0.0 - 25.5 sec. or 0 - 255 sec.
Max 1									0 - 255 sec
Max 2									0 - 255 sec
Walk									0 - 255 sec
Ped Clear									0 - 255 sec
Seconds Per Actuation									0.0 - 25.5 sec.
Time Before Reduction									0 - 255 sec
Time to Reduce									0 - 255 sec
Minimum Gap									0.0 - 25.5 sec.
Max Variable Initial									0 - 255 sec
Max Extend									0.0 - 25.5 sec.
Auto Max									0 - 255 sec
Inhibit Min Yellow									X = On
Red Decimal Off									X = On

Other Controller Functions

Phase -->	**1**	**2**	**3**	**4**	**5**	**6**	**7**	**8**	
Inhibit Simultaneous Gap Out									X = On

Last Car Passage		0 = recall phase, 1 = last car passage, 2 = NOT recall - Not last car passage
Red Revert (+2seconds)		0 - 25.5 sec.
Auto Ped Clear		X = On
Flashing Don't Walk Thru Yellow		X = On
Soft Recall Delay		0 - 25.5 sec.
Change Sequence		X = On (After a download without a power on - off cycle)

Phase -->	**1**	**2**	**3**	**4**	**5**	**6**	**7**	**8**	
Red Clear Extension Detector									0 = none 1 - 32 = detector 1 - 32
Red Clear Extension Red Time									0 - 25.5 sec.

Local Detectors								
Detector Data								
	Yellow Lock	Detector Inhibit	Call Phase	Extend Phase	Switch Phase	Delay Time	Stretch / Disconnect Time	Delay or Disconnect Mode
Detector 1 -								
Detector 2 -								
Detector 3 -								
Detector 4 -								
Detector 5 -								
Detector 6 -								
Detector 7 -								
Detector 8 -								
Detector 9 -								
Detector 10 -								
Detector 11 -								
Detector 12 -								
Detector 13 -								
Detector 14 -								
Detector 15 -								
Detector 16 -								
Detector 17 -								
Detector 18 -								
Detector 19 -								
Detector 20 -								
Detector 21 -								
Detector 22 -								
Detector 23 -								
Detector 24 -								
Detector 25 -								
Detector 26 -								
Detector 27 -								
Detector 28 -								
Detector 29 -								
Detector 30 -								
Detector 31 -								
Detector 32 -								

yellow lock, detector inhibit, - X = On; call, extend, phase - 0 = none 1 - 8 = phase 1 - 8; delay time - 0 - 255 sec
stretch / disconnect time - 0.0 - 25.5 sec.; delay or disconnect Mode - 0 -12

Detector Plans															
Loop Number															
Plan Detectors										0 - 32, 0 = none, 1 - 32 = detectors 1- 32					
Detector Plan 2	Call Phase									0 - 8, 0 = none, 1 - 8 = phase 1 - 8					
	Extend Phase														
	Switch Phase														
	Delay Time														
	Stretch/Disconnect Time														
	Delay/Disconnect Mode														
Detector Plan 3	Call Phase									0 - 8, 0 = none, 1 - 8 = phase 1 - 8					
	Extend Phase														
	Switch Phase														
	Delay Time														
	Stretch/Disconnect Time														
	Delay/Disconnect Mode														
Detector Plan 4	Call Phase									0 - 8, 0 = none, 1 - 8 = phase 1 - 8					
	Extend Phase														
	Switch Phase														
	Delay Time														
	Stretch/Disconnect Time														
	Delay/Disconnect Mode														

Detector Fail Monitor

	Fail Monitor Enable	Recall Phase	Min Counts	Max Counts
Detector 1 -				
Detector 2 -				
Detector 3 -				
Detector 4 -				
Detector 5 -				
Detector 6 -				
Detector 7 -				
Detector 8 -				
Detector 9 -				
Detector 10 -				
Detector 11 -				
Detector 12 -				
Detector 13 -				
Detector 14 -				
Detector 15 -				
Detector 16 -				
Detector 17 -				
Detector 18 -				
Detector 19 -				
Detector 20 -				
Detector 21 -				
Detector 22 -				
Detector 23 -				
Detector 24 -				
Detector 25 -				
Detector 26 -				
Detector 27 -				
Detector 28 -				
Detector 29 -				
Detector 30 -				
Detector 31 -				
Detector 32 -				

fail monitor enable - X = On
recall phase - 0 = none 1 - 8 = phase 1 - 8
min, max counts - 0 - 999

Detector Fail Sample Period (all detectors)		0 - 255 minutes

Video Fail Inputs -->	**1**	**2**	**3**	**4**	**5**	**6**	**7**	**8**	
Phase Recalled									0 = none, 1 - 8 = phase 1 - 8

System Detectors

System Detectors -->	**1**	**2**	**3**	**4**	**5**	**6**	**7**	**8**	
Local Detector									0 = none, 1 - 32 = detector 1 - 32

Flash

Flash Entry			**Flash Exit**		
Ring 1	**Ring 2**	**Interval**	**Ring 1**	**Ring 2**	**Interval**
		Red			
0 = none, phase 1 - 8			0 = none, phase 1 - 8		0 = red, 1 = yel, 2 = grn

Power up Flash		0.0 - 25.5 sec

Soft Flash

Phase	**1**	**2**	**3**	**4**	**5**	**6**	**7**	**8**	0 = dark, 1=flash yel WIG, 2 = flash yel WAG, 3 = flash red WIG, 4 = flash red WAG				
Overlap	**A**	**B**	**C**	**D**	**E**	**F**	**G**	**H**	**I**	**J**	**K**	**L**	same as phase
Internal Logic Output	**1**	**2**	**3**	**4**	**5**	**6**	**7**	**8**	**9**	**10**	**11**	**12**	0 = normal, 1 = dark, 2 = flash WIG

Overlaps / FYLTA

Vehicle Overlaps		Phase or Movement	Phase 1	2	3	4	5	6	7	8	Extension Green	Clearance Yellow	Clearance Red	
Overlaps	A													A - D 0 = no overlap 1 = overlap 2 = 60 FPM 3 = Not ped overlap
	B													
	C													
	D													
	E													
	F													E - L 0 = no Overlap 1 = Overlap
	G													
	H													
	I													
	J													Green, Yellow, Red 0.0 - 25.5 sec
	K													
	L													

Not Ped - Ped Overlaps

		A	B	C	D	E	F	G	H	
Overlaps	A									X = nor Ped Ped Overlap
	B									
	C									
	D									

Ped Overlaps

	Phase -->	1	2	3	4	5	6	7	8	Walk	Ped Clear	
Ped Overlap	A											Phase X = on Walk, Ped Clear 0 - 255 seconds
	B											
	C											
	D											
	E											
	F											
	G											
	H											

Flashing Yellow Left Turn Arrow (FYLTA)

Phase Pairs -->	1 - 2	3 - 4	5 - 6	7 - 8	
Enable					0 = off, 3 = 3 outputs, 4 = 4 outputs, 5 = 5 outputs
Even Omits Odd					X = on
Detector Switch Odd / Even					X = on, odd phase must be omitted
Red Transition					0.0 or 2.0 - 25.5 sec.
Red Extension					0.0 - 25.5 sec.
Return to GLTA					0 = off, 1 = max out, 2 = yellow lock

Service Plans

	Phase -->	1	2	3	4	5	6	7	8	
Service Plan 1	Call Mode									
	0 = actuated, 1 = omit, 2 = N/A, 3 = min recall, 4 = max recall, 5 = soft recall, 6 = ped recall, 7 = omit ped, 8 = red rest									
	Minimum Green									0 - 255 sec.
	Passage									0.0 - 25.5 sec.
	Yellow									0.0 - 25.5 sec. or 3.0 - 25.5
	Red									0.0 - 25.5 sec.
	Walk									0 - 255 sec.
	Pedestrian Clearance									0 - 255 sec.

	Phase -->	1	2	3	4	5	6	7	8	
Service Plan 2	Call Mode									
	0 = actuated, 1 = omit, 2 = N/A, 3 = min recall, 4 = max recall, 5 = soft recall, 6 = ped recall, 7 = omit ped, 8 = red rest									
	Minimum Green									0 - 255 sec.
	Passage									0.0 - 25.5 sec.
	Yellow									0.0 - 25.5 sec. or 3.0 - 25.5
	Red									0.0 - 25.5 sec.
	Walk									0 - 255 sec.
	Pedestrian Clearance									0 - 255 sec.

	Phase -->	1	2	3	4	5	6	7	8	
Service Plan 3	Call Mode									
	0 = actuated, 1 = omit, 2 = N/A, 3 = min recall, 4 = max recall, 5 = soft recall, 6 = ped recall, 7 = omit ped, 8 = red rest									
	Minimum Green									0 - 255 sec.
	Passage									0.0 - 25.5 sec.
	Yellow									0.0 - 25.5 sec. or 3.0 - 25.5
	Red									0.0 - 25.5 sec.
	Walk									0 - 255 sec.
	Pedestrian Clearance									0 - 255 sec.

	Phase -->	1	2	3	4	5	6	7	8	
Service Plan 4	Call Mode									
	0 = actuated, 1 = omit, 2 = N/A, 3 = min recall, 4 = max recall, 5 = soft recall, 6 = ped recall, 7 = omit ped, 8 = red rest									
	Minimum Green									0 - 255 sec.
	Passage									0.0 - 25.5 sec.
	Yellow									0.0 - 25.5 sec. or 3.0 - 25.5
	Red									0.0 - 25.5 sec.
	Walk									0 - 255 sec.
	Pedestrian Clearance									0 - 255 sec.

	Phase -->	1	2	3	4	5	6	7	8	
Service Plan 5	Call Mode									
	0 = actuated, 1 = omit, 2 = N/A, 3 = min recall, 4 = max recall, 5 = soft recall, 6 = ped recall, 7 = omit ped, 8 = red rest									
	Minimum Green									0 - 255 sec.
	Passage									0.0 - 25.5 sec.
	Yellow									0.0 - 25.5 sec. or 3.0 - 25.5
	Red									0.0 - 25.5 sec.
	Walk									0 - 255 sec.
	Pedestrian Clearance									0 - 255 sec.

	Phase -->	1	2	3	4	5	6	7	8	
Service Plan 6	Call Mode									
	0 = actuated, 1 = omit, 2 = N/A, 3 = min recall, 4 = max recall, 5 = soft recall, 6 = ped recall, 7 = omit ped, 8 = red rest									
	Minimum Green									0 - 255 sec.
	Passage									0.0 - 25.5 sec.
	Yellow									0.0 - 25.5 sec. or 3.0 - 25.5
	Red									0.0 - 25.5 sec.
	Walk									0 - 255 sec.
	Pedestrian Clearance									0 - 255 sec.

Service Plans cont.

		1	2	3	4	5	6	7	8	
	Phase -->	1	2	3	4	5	6	7	8	
Service Plan 7	Call Mode									
	0 = actuated, 1 = omit, 2 = N/A, 3 = min recall, 4 = max recall, 5 = soft recall, 6 = ped recall, 7 = omit ped, 8 = red rest									
	Minimum Green									0 - 255 sec.
	Passage									0.0 - 25.5 sec.
	Yellow									0.0 - 25.5 sec. or 3.0 - 25.5
	Red									0.0 - 25.5 sec.
	Walk									0 - 255 sec.
	Pedestrian Clearance									0 - 255 sec.

		1	2	3	4	5	6	7	8	
	Phase -->	1	2	3	4	5	6	7	8	
Service Plan 8	Call Mode									
	0 = actuated, 1 = omit, 2 = N/A, 3 = min recall, 4 = max recall, 5 = soft recall, 6 = ped recall, 7 = omit ped, 8 = red rest									
	Minimum Green									0 - 255 sec.
	Passage									0.0 - 25.5 sec.
	Yellow									0.0 - 25.5 sec. or 3.0 - 25.5
	Red									0.0 - 25.5 sec.
	Walk									0 - 255 sec.
	Pedestrian Clearance									0 - 255 sec.

Max Plans

		1	2	3	4	5	6	7	8	
	Phase -->	1	2	3	4	5	6	7	8	
Max Plan 1	Normal Max									0 - 255 sec.
	Fail Max									
	Phase -->	1	2	3	4	5	6	7	8	
Max Plan 2	Normal Max									0 - 255 sec.
	Fail Max									
	Phase -->	1	2	3	4	5	6	7	8	
Max Plan 3	Normal Max									0 - 255 sec.
	Fail Max									
	Phase -->	1	2	3	4	5	6	7	8	
Max Plan 4	Normal Max									0 - 255 sec.
	Fail Max									
	Phase -->	1	2	3	4	5	6	7	8	
Max Plan 5	Normal Max									0 - 255 sec.
	Fail Max									
	Phase -->	1	2	3	4	5	6	7	8	
Max Plan 6	Normal Max									0 - 255 sec.
	Fail Max									
	Phase -->	1	2	3	4	5	6	7	8	
Max Plan 7	Normal Max									0 - 255 sec.
	Fail Max									
	Phase -->	1	2	3	4	5	6	7	8	
Max Plan 8	Normal Max									0 - 255 sec.
	Fail Max									
	Phase -->	1	2	3	4	5	6	7	8	0 = use max1 / max2
	Max Mode									1 = use time of day / coord

Coordination Data

Coordination Modes

Flash Mode		0=off, 1=on, 33=time clock, 34=comm, 35=hardwire
Coordination Plan Mode		0=free, 1-32 = coord plan 1-32, 33=time clock, 34=comm, 35=hardwire
Offset Seeking Mode		0=add only, 1=dwell, 2=fastway
Late Ped		0 = off, 1 = on
Coord Walk Rest		0 = off, 1 = on, 2 = by TOD circuit 160
Coordination Double Cycle		0=off, 1=on (no coord ped), 2=on (beginning green coord ped), 3=on (coord ped always)
Zero Mode (TS2 only)		0=start of main street, 1=end of main street, 2=by TOD circuit 144

Phase -->	**1**	**2**	**3**	**4**	**5**	**6**	**7**	**8**	0 = service allowed 1 = service prevented
Omit Phase During Coord Double Cycle									

Coordination Plans

Coord Plan	**Coordination Phases**		**Cycle Length**	**Offset Time**	**Min Cycle Length Dwell Time**	**Permissive**	**Service Plan**	**Max Plan**
	Ring 1	**Ring 2**						
1 -								
2 -								
3 -								
4 -								
5 -								
6 -								
7 -								
8 -								
9 -								
10 -								
11 -								
12 -								
13 -								
14 -								
15 -								
16 -								
17 -								
18 -								
19 -								
20 -								
21 -								
22 -								
23 -								
24 -								
25 -								
26 -								
27 -								
28 -								
29 -								
30 -								
31 -								
32 -								
	0 - 8		0 - 255 sec.				0 - 8	

Coordination Plans cont.										
	* = Force Offs / Split Times (TS2)								* = Yield Points / Actuated Times (TS2)	
Coord Plan	1	2	3	4	5	6	7	8	Ring 1	Ring 2
1 -										
2 -										
3 -										
4 -										
5 -										
6 -										
7 -										
8 -										
9 -										
10 -										
11 -										
12 -										
13 -										
14 -										
15 -										
16 -										
17 -										
18 -										
19 -										
20 -										
21 -										
22 -										
23 -										
24 -										
25 -										
26 -										
27 -										
28 -										
29 -										
30 -										
31 -										
32 -										
	0 - 255 sec * = force offs and yield points									

Circuit Mapping																	
Circuit Map	Coord Plan	Time Clock Circuit		Time Clock Circuit		Time Clock Circuit		Time Clock Circuit		Time Clock Circuit		Time Clock Circuit		Time Clock Circuit		Time Clock Circuit	
1																	
2																	
3																	
4																	
5																	
6																	
7																	
8																	
9																	
10																	
11																	
12																	
13																	
14																	
15																	
16																	
17																	
18																	
19																	
20																	

coord plan - 0 = free, 1 - 32 = coord plan 1 - 32, 33 = any, 34 none selected
time clock circuits - 0 = not used, or circuits 6 - 185

Dynamic Phase Length										
	Phase -->	1	2	3	4	5	6	7	8	
Back Detector										0 = none, 1-32 = detector 1-32
Lane Factor										0 = none, 1.0 - 5.0
Check Out Detector										0 = none, 1-32 = detector 1-32
Coord Delta Force Off	Set A									0 - 255 sec
	Set B									
	Set C									
	Set D									
Free Delta Max	Set A									
	Set B									
	Set C									
	Set D									

Platoon Progression					
Entry Local Only			Master Local Only		
Platoon Max		0 , 30 - 120 sec	Smoothing Factor		0.0 - 1.0
Min Platoon Green		0 , 20 - 40 sec			
Entry Detector Gap		0.0 - 4.0 sec			

Inbound			Outbound		
Only for Entry Inbound Local or Master Local			Only for Entry Outbound Local or Master Local		
Entry IB Local also Last OB Local		0 - 50	Entry OB Local also Last IB Local		0 - 50
Speed		0, 30 - 55 mph	Speed		0, 30 - 55 mph
Distance from Entry Local		0 - 65000 feet	Distance from Entry Local		0 - 65000 feet
Entry Local Only			Entry Local Only		
Distance from Entry Local Detector		0 - 999 feet	Distance from Entry Local Detector		0 - 999 feet
Entry Local Detector		0 - 32	Entry Local Detector		0 - 32
Master Local			Master Local		
Master Mid - System Critical Detectors		0 - 16	Master Mid - System Critical Detectors		0 - 16

Force Off Percents													
Inbound	1	3	4	5	7	8	Outbound	1	3	4	5	7	8
Split 1							Split 1						
Split 2							Split 2						
	0 - 100 %							0 - 100 %					

Time of Day Data

Day Program												
	Day Prog.	Time	Coord Plan	Coord Plan or Circuit		State On / Off		Day Prog.	Time	Coord Plan	Coord Plan or Circuit		State On/Off
1							51						
2							52						
3							53						
4							54						
5							55						
6							56						
7							57						
8							58						
9							59						
10							60						
11							61						
12							62						
13							63						
14							64						
15							65						
16							66						
17							67						
18							68						
19							69						
20							70						
21							71						
22							72						
23							73						
24							74						
25							75						
26							76						
27							77						
28							78						
29							79						
30							80						
31							81						
32							82						
33							83						
34							84						
35							85						
36							86						
37							87						
38							88						
39							89						
40							90						
41							91						
42							92						
43							93						
44							94						
45							95						
46							96						
47							97						
48							98						
49							99						
50							100						
	1 - 15	hh : mm	X = on	coord plan 0 - 32 or circuit 1-185		X = on		1 - 15	hh : mm	X = on	coord plan 0 - 32 or circuit 1-185		X = on

Day Program cont.													
	Day Prog.	Time	Coord Plan	Coord Plan or Circuit		State On / Off		Day Prog.	Time	Coord Plan	Coord Plan or Circuit		State On / Off
101							151						
102							152						
103							153						
104							154						
105							155						
106							156						
107							157						
108							158						
109							159						
110							160						
111							161						
112							162						
113							163						
114							164						
115							165						
116							166						
117							167						
118							168						
119							169						
120							170						
121							171						
122							172						
123							173						
124							174						
125							175						
126							176						
127							177						
128							178						
129							179						
130							180						
131							181						
132							182						
133							183						
134							184						
135							185						
136							186						
137							187						
138							188						
139							189						
140							190						
141							191						
142							192						
143							193						
144							194						
145							195						
146							196						
147							197						
148							198						
149							199						
150							200						
	1 - 15	hh : mm	X = on	coord plan 0 - 32 or circuit 1-185		X = on		1 - 15	hh : mm	X = on	coord plan 0 - 32 or circuit 1-185		X = on

Week Program

	Sun	Mon	Tue	Wed	Thu	Fri	Sat
1							
2							
3							
4							
5							
6							
7							
8							
9							
10							

0 = none, 1 - 15 = day plan

Exception Days

	Week of Month	Month	Day Week / Month	Day Prog.
1				
2				
3				
4				
5				
6				
7				
8				
9				
10				
11				
12				
13				
14				
15				
16				
17				
18				
19				
20				
21				
22				
23				
24				
25				
26				
27				
28				
29				
30				
31				
32				
33				
34				
35				
	0 - 5	0 - 12	1 - 7 or 1 - 31	0 - 15

Time Clock References

Synch reference Mode		0 = timed, 1 = by event
Synch Reference Time		00:00 - 23:59
Daylight Savings Enable		X = on
Reset Time		00:00 - 23:59

Year Program

From Date	To Date	Week Program	
			New Years Day - Date - January 1st
			Martin Luther King Day - DOW WOM - 3rd Monday of January
			President's Day - DOW WOM - 3rd Monday February
			Memorial Day - DOW WOM - Last Monday May
			Four of July - Date - July 4th
			Labor Day - DOW WOM - 1st Monday September
			Columbus Day - DOW WOM - 2nd Monday October
			Vetern's Day - Date - November 11th
			Thankgiving - DOW WOM - 4th Thursday November
			Christmas - Date - December 25th

Circuit Overrides							
1-Coord Line 1	CL1		On / Off / TOD	51-Ped Omit 3	PO2		On / Off / TOD
2-Coord Line 2	CL2			52-Ped Omit 4	PO3		
3-Coord Line 4	CL4			53-Ped Omit 5	PO4		
4-Coord Line 8	CL8			54-Ped Omit 6	PO5		
5-Coord Line 16	C16			55-Ped Omit 7	PO6		
6-Not Used	N/U			56-Ped Omit 8	PO7		
7-Soft Flash	SFL			57-Conditional Service	PO8		
8-Enable System Relays	ESR			58-Inhibit Simultaneous Gap Out	CVS		
9-Not Used	N/U			59-Inhibit Hardwire	ISG		
10-Not Used	N/U			60-Ped Override Mode	HWI		
11-Not Used	N/U			61-Dual Entry	POM		
12-Min Recall	MIN			62-Exclusive Ped	DLE		
13-Max 2 Both Rings	MX2			63-Call to Time Clock Mode	EPD		
14-Coord Inhibit Max Ring 1	IM1			64-Dual Enhanced Ped	CTC		
15-Coord Inhibit Max Ring 2	IM2			65-Service Plan 1	DEP		
16-Call to Free	CTF			66-Service Plan 2	SP1		
17-TOD Output 1	TO1			67-Service Plan 3	SP2		
18-TOD Output 2	TO2			68-Service Plan 4	SP3		
19-TOD Output 3	TO3			69-Service Plan 5	SP4		
20-TOD Output 4	TO4			70-Service Plan 6	SP5		
21-TOD Output 5	TO5			71-Service Plan 7	SP6		
22-TOD Output 6	TO6			72-Service Plan 8	SP7		
23-TOD Output 7	TO7			73-Max Plan 1	SP8		
24-TOD Output 8	TO8			74-Max Plan 2	MP1		
25-Vehicle Call Phase 1	VC1			75-Max Plan 3	MP2		
26-Vehicle Call Phase 2	VC2			76-Max Plan 4	MP3		
27-Vehicle Call Phase 3	VC3			77-Max Plan 5	MP4		
28-Vehicle Call Phase 4	VC4			78-Max Plan 6	MP5		
29-Vehicle Call Phase 5	VC5			79-Max Plan 7	MP6		
30-Vehicle Call Phase 6	VC6			80-Max Plan 8	MP7		
31-Vehicle Call Phase 7	VC7			81-Transit Priority Max Group 1	MP8		
32-Vehicle Call Phase 8	VC8			82-Transit Priority Max Group 2	TG1		
33-Ped Call Phase 1	PC1			83-Transit Priority Max Group 3	TG2		
34-Ped Call Phase 2	PC2			84-Transit Priority Max Group 4	TG3		
35-Ped Call Phase 3	PC3			85-Transit Priority Max Group 5	TG4		
36-Ped Call Phase 4	PC4			86-Transit Priority Max Group 6	TG5		
37-Ped Call Phase 5	PC5			87-Transit Priority Max Group 7	TG6		
38-Ped Call Phase 6	PC6			88-Transit Priority Max Group 8	TG7		
39-Ped Call Phase 7	PC7			89-Inhibit Gap Reducing 1	TG8		
40-Ped Call Phase 8	PC8			90-Inhibit Gap Reducing 2	GR1		
41-Phase Omit 1	VO1			91-Inhibit Gap Reducing 3	GR2		
42-Phase Omit 2	VO2			92-Inhibit Gap Reducing 4	GR3		
43-Phase Omit 3	VO3			93-Inhibit Gap Reducing 5	GR4		
44-Phase Omit 4	VO4			94-Inhibit Gap Reducing 6	GR5		
45-Phase Omit 5	VO5			95-Inhibit Gap Reducing 7	GR6		
46-Phase Omit 6	VO6			96-Inhibit Gap Reducing 8	GR7		
47-Phase Omit 7	VO7			97-Lag 1	GR8		
48-Phase Omit 8	VO8			98-Lag 3	LG1		
49-Ped Omit 1	PO1			99-Lag 5	LG3		
50-Ped Omit 2	PO2			100-Lag 7	LG5		

Circuit Overrides cont.							
101-Inhibit Overlap A	OLA		On / Off / TOD	151-Coord Hold 7	HD7		On / Off / TOD
102-Inhibit Overlap B	OLB			152-Coord Hold 8	HD8		
103-Inhibit Overlap C	OLC			153-PE Priority Return B	PRB		
104-Inhibit Overlap D	OLD			154-PE Priority Return C	PRC		
105-Enable Schedule A Phone 1	AT1			155-PE Priority Return D	PRD		
106-Enable Schedule A Phone 2	AT2			156-PE Priority Return E	PRE		
107-Enable Schedule B Phone 1	BT1			157-Platoon Inbound	PPI		
108-Enable Schedule B Phone 2	BT2			158-Platoon Outbound	PPO		
109-Enable Schedule C Phone 1	CT1			159-Platoon Spl 2	PS2		
110-Enable Schedule C Phone 2	CT2			160-Coord Walk Rest	CWR		
111-Enable Volume to Call Phone 1	VT1			161-Dynamic Phase Length Short Inhibit 1	SI1		
112-Enable Volume to Call Phone 2	VT2			162-Dynamic Phase Length Short Inhibit 2	SI2		
113-Enable Volume Logging	EVL			163-Dynamic Phase Length Short Inhibit 3	SI3		
114-Enable MOE Logging	EML			164-Dynamic Phase Length Short Inhibit 4	SI4		
115-Detector Low Threshold Inhibit	DLI			165-Dynamic Phase Length Short Inhibit 5	SI5		
116-Detector Continue presence Inhibit	DPI			166-Dynamic Phase Length Short Inhibit 6	SI6		
117-Inhibit Detector Based On Programming	IND			167-Dynamic Phase Length Short Inhibit 7	SI7		
118-Inhibit Detector Delay	IDD			168-Dynamic Phase Length Short Inhibit 8	SI8		
119-Inhibit Conditional Ped	ICP			169-Coord Late Left Turn 1	CT1		
120-Inhibit Transit Priority	ITP			170-Coord Late Left Turn 3	CT3		
121-Red Rest Ring 1	RR1			171-Coord Late Left Turn 5	CT5		
122-Red Rest Ring 2	RR2			172-Coord Late Left Turn 7	CT7		
123-Omit Red Clear Ring 1	OR1			173-Dynamic Phase Length Enable A	DPA		
124-Omit Red Clear Ring 2	OR2			174-Dynamic Phase Length Enable B	DPB		
125-Ped Recycle Ring 1	PR1			175-Dynamic Phase Length Enable C	DPC		
126-Ped Recycle Ring 2	PR2			176-Dynamic Phase Length Enable D	DPD		
127-Enable MOE Log to Call Phone 1	MT1			177-Proactive Plan Select Average	PSA		
128-Enable MOE Log to Call Phone 2	MT2			178-Proactive Plan Select Inbound	PSI		
129-Transit Inhibit Short Time 1	IS1			179-Proactive Plan Select Outbound	PSO		
130-Transit Inhibit Short Time 2	IS2			180-Split Variant Inbound	SVI		
131-Transit Inhibit Short Time 3	IS3			181-Split Variant Outbound	SVO		
132-Transit Inhibit Short Time 4	IS4			182-Disable Coord Walk Rest Ring 1	WR1		
133-Transit Inhibit Short Time 5	IS5			183-Disable Coord Walk Rest Ring 2	WR2		
134-Transit Inhibit Short Time 6	IS6			184-Proactive Plan Select New Look	NLK		
135-Transit Inhibit Short Time 7	IS7			185-Disable Red Clearance Extension	DRX		
136-Transit Inhibit Short Time 8	IS8			186-Detector Plan Line 1	DL1		
137-Enable Transit Priority Logging	ETL			187-Detector Plan Line 2	DL2		
138-Disable Flashing Yellow Arrow 1	DF1						
139-Disable Flashing Yellow Arrow 3	DF3						
140-Disable Flashing Yellow Arrow 5	DF5						
141-Disable Flashing Yellow Arrow 7	DF7						
142-Disable Auto Max	DAM						
143-Disable Coord Double Cycle	DCD						
144-End of Main Street	EMS						
145-Coord Hold 1	HD1						
146-Coord Hold 2	HD2						
147-Coord Hold 3	HD3						
148-Coord Hold 4	HD4						
149-Coord Hold 5	HD5						
150-Coord Hold 6	HD6						

Preemption Data

Sequence							
Sequences / Intervals		Instruction	Phases Serviced	Interval Time	Hold On Input	Outputs On	Output Mode
1	1						
	2						
	3						
	4						
	5						
	6						
	7						
	8						
	9						
	10						
2	1						
	2						
	3						
	4						
	5						
	6						
	7						
	8						
	9						
	10						
3	1						
	2						
	3						
	4						
	5						
	6						
	7						
	8						
	9						
	10						
4	1						
	2						
	3						
	4						
	5						
	6						
	7						
	8						
	9						
	10						
5	1						
	2						
	3						
	4						
	5						
	6						
	7						
	8						
	9						
	10						

Instructions -
0 = service phases
1 - 9 = special intervals 1 - 9
90 = go to all red
91 = soft flash on
92 = soft flash off
93 = enable peds and phases
94 = disable peds
95 = priority return
96 = enable coord
98 = return with no calls
99 = return with vehicle calls
100 = jump to step in interval time
101 = use interval time as resetable gap timer

Instructions cont.-
200 = light rail train phase with out peds
201 = light rail train phase with peds
202 = return to highest queue / delay phase (this uses the dynamic phase length back detectors)

Phases Serviced - phases 1 - 8

Interval Time - 0 - 255 sec or interval 1 - 10

Hold on Input - X = on

Outputs On - output 1 - 8

Output Modes -
0 = all steady on
1 = all flash together
2 = odd flashes WIG, even flashes WAG
3 = 1 - 4 steady on, 5 - 8 all flash together

Sequence cont.								
Sequences / Intervals		Instruction	Phases Serviced	Interval Time	Hold On Input	Outputs On	Output Mode	
6	1							Instructions - 0 = service phases 1 - 9 = special intervals 1 - 9 90 = go to all red 91 = soft flash on 92 = soft flash off 93 = enable peds and phases 94 = disable peds 95 = priority return 96 = enable coord 98 = return with no calls 99 = return with vehicle calls 100 = jump to step in interval time 101 = use interval time as resetable gap timer
	2							
	3							
	4							
	5							
	6							
	7							
	8							
	9							
	10							
7	1							
	2							
	3							
	4							
	5							Instructions cont.- 200 = light rail train phase with out peds 201 = light rail train phase with peds 202 = return to highest queue / delay phase (this uses the dynamic phase length back detectors)
	6							
	7							
	8							
	9							
	10							
8	1							Phases Serviced - phases 1 - 8 Interval Time - 0 - 255 sec or interval 1 - 10 Hold on Input - X = on Outputs On - output 1 - 8 Output Modes - 0 = all steady on 1 = all flash together 2 = odd flashes WIG, even flashes WAG 3 = 1 - 4 steady on, 5 - 8 all flash together
	2							
	3							
	4							
	5							
	6							
	7							
	8							
	9							
	10							

Sequence Timing											
	Sequence -- >	1	2	3	4	5	6	7	8	
	Input Memory									X = on
	Input Priority									0 = lowest, - 8 = highest
Entry (Transition) Parameters	Min Green									0.0 - 25.5 sec 0.0 would time the noemal function time
	Walk									
	Ped Clear									
	Overlap Yellow									0.0 - 25.5 sec
	Overlap Red									
	Delay to Preempt									0 - 255 sec
	Delay Ped Omit									
	Delay Phase Omit									
	Min Reservice									0 - 255 min
Overlap Inhibits	A									X = inhibit
	B									
	C									
	D									
Exit Parameters	Exit to Coord Plan Offset by X									0 - 20
	Exit Coord Plan Time									0 - 60 min
	Exit to Max Plan									0 - 8
	Exit Free Time									0 - 60 min
	Override Time									
	Fail Time									
	Exit Mode Time									

Priority Return and Special Intervals														
Phase / Overlap -->		1	2	3	4	5	6	7	8	A	B	C	D	
Priority Return	Enable		X = enabled											
	A (max)									0 - 100% of currently used max				
	B (max)													
	C (max)													
	D (max)													
	E (max)													
	Ped Clear									0 - 100% of currently used ped clearance				
Queue Delay Recovery										0 - 255 sec.				
Special Intervals	1													0 = Dark
	2													1 = green don't walk
	3													2 = green walk
	4													3 = green flashing don't walk
	5													4 = yellow
	6													5 = red
	7													6 = flashing yellow WIG
	8													7 = flashing yellow WAG
	9													8 = flashing red WIG
														9 = flashing red WAG
														10 = walk only
														11=flashing don't walk only

Light Rail Train				
Light Rail Train -->	1	2	3	4
Associated Preempt				
Time to Green				
Horizontal Bar Flash Time				
Vertical Bar Flash Time				
Min Duration				

0 = none, preempt 1 - 8
0 - 255 sec
0.0 - 25.5 sec
0 - 255 sec

Communications Data

1st Central Phone Number		2nd Central Phone Number	
Modem Setup String		Intersection Name	
Central Port			
System Mode			
System Port			

System ID		Local ID		IP Address	
				Gateway Address	

Baud Rates			Port Use
Port 1 (Slot A2 Upper)		0 - 3	
Port 2 (Slot A2 Lower)			
Port 3 (Slot A1 Upper)			
Port 4 (Slot A1 Lower or C50S)		2 - 3	
0 = 1200, 1 = 2400, 2 = 9600, 3 = 19200 baud			

Reports

Volume Log Period			MOE Log Period		
0 = disabled, 1,2,3,4,5,6,10,12,15,20,30,60 minutes					

Alarm 1		0 = none 1 = schedule A 2 = schedule B 3 = schedule C 4 = schedule R	Soft Flash		0 = nNone 1 = schedule A 2 = schedule B 3 = schedule C 4 = schedule R
Alarm 2			Manual Control Enable (MCE)		
Alarm 3			Emergency or Railroad Preempt		
Alarm 4			Not Used		
Alarm 5			Cycle Failure		
Not Used			Coordination Failure		
Not Used			Keyboard use / Data Changed		
Not Used			Coord Running / Free		
Power On / Off			Cabinet Door		
Checksum Failure			Not Used		
Video / Detector Failure			Monitor Status		
Not Used					

Miscellaneous Data

Transit Priority

	1	2	3	4	5	6	7	8	
Phases									Phases 1 - 8 (max of 2 compatible phases)
PE Enable (6.25Hz TP call on PE)									X = 6.25 Hz signal will activate TP
Priority									0 - 8, 8 = highest
Memory									X = on
Delay Time									0 - 255 sec
Minimum Reservice Time (per input)									0 - 255 min
Override Time									0 - 255 sec
Bus Extend									0 - 255 sec
Minimum Reservice Time (all inputs)		0 - 255 min							
Free Operation Mode		0 = use shortest of max 1 or 2, 1 - 8 = use max time of group 1 - 8, 9 = use time of day circuit							

Transit Priority Alternate Force Off Plans

Current Coord Plan	**1**	**2**	**3**	**4**	**5**	**6**	**7**	**8**	
Alternate TP Force Off Plan									0 = none
Current Coord Plan	**9**	**10**	**11**	**12**	**13**	**14**	**15**	**16**	17 - 32 = coord plan 17 - 32
Alternate TP Force Off Plan									

Group Timing

	Phase -->	**1**	**2**	**3**	**4**	**5**	**6**	**7**	**8**	
Group 1	**Max Times**									0 - 255 sec 0 would time the normal function time
	Walk Times									
Group 2	**Max Times**									
	Walk Times									
Group 3	**Max Times**									
	Walk Times									
Group 4	**Max Times**									
	Walk Times									
Group 5	**Max Times**									
	Walk Times									
Group 6	**Max Times**									
	Walk Times									
Group 7	**Max Times**									
	Walk Times									
Group 8	**Max Times**									
	Walk Times									

Truck Priority

Truck Priority-->	**1**	**2**	**3**	**4**	
Associated Transit Priority					0 = none 1 - 8 = transit priority 1 - 8
Leading Detector					0 = none, 1 - 32 = detector 1 - 32
Trailing Detector					
Stop Bar Distance					0 - 999 feet
Trap Distance					0.0 - 25.5 feet
Minimum Speed					0 - 100 mph
Minimum Length					0 - 255 feet
Downhill Grade					0 - 20 %
Uphill Grade					
Undersized Vehicle					X = Enabled

BIU Inputs and Outputs

BIU Inputs (Non Default I/O is offset to the right)

BIU 1			BIU 2			BIU 3			BIU 4		

BIU 9			BIU 10			BIU 11			BIU 12		

BIU Outputs (Non Default I/O is offset to the right)											
BIU 1			**BIU 2**			**BIU 3**			**BIU 4**		

	Change I/O		X = On (After a download without a power on - off cycle)													
	BIUs -->	**1**	**2**	**3**	**4**	**9**	**10**	**11**	**12**							
	BIU Enables									X = enabled						
	MMU Enable		0 = disable, 1 = enable, 2 = compatibility checks disabled													
MMU Channel	**1**	**2**	**3**	**4**	**5**	**6**	**7**	**8**	**9**	**10**	**11**	**12**	**13**	**14**	**15**	**16**
Assignments																
	0 - 36															

Inputs (Non Default I/O is offset to the right)											
MSA - f			MSB - m			MSA - k			MSD - V		
MSA - K			MSB - n			MSA - q			MSD - W		
MSB - N			MSB - U			MSA - y			MSD - X		
MSB - L			MSB - S			MSA - HH			MSD - Y		
MSC - P			MSB - R			MSA - n			MSD - Z		
MSC - S			MSB - g			MSA - AA			MSD - a		
MSC - V			MSC - n			MSC - b			MSD - b		
MSC - t			MSC - q			MSA - BB			MSD - c		
MSA - g			MSC - r			MSB - B			MSD - d		
MSA - L			MSC - s			MSB - W			MSD - e		
MSB - P			MSA - i			MSB - X			MSD - f		
MSB - M			MSA - N			MSB - v			MSD - g		
MSC - R			MSA - P			MSD - A			MSD - h		
MSC - T			MSA - x			MSD - B			MSD - i		
MSC - U			MSA - FF			MSD - C			MSD - j		
MSC - W			MSA - GG			MSD - D			MSD - k		
MSA - h			MSA - w			MSD - E			MSD - m		
MSA - M			MSA - m			MSD - F			MSD - n		
MSB - i			MSC - Y			MSD - G			MSD - p		
MSB - h			MSC - Z			MSD - H			MSD - q		
MSC - m			MSC - a			MSD - J			MSD - r		
MSC - p			MSC - u			MSD - K			MSD - s		
MSC - EE			MSB - V			MSD - L			MSD - t		
MSC - X			MSB - z			MSD - M			MSD - u		
MSA - EE			MSC - v			MSD - N			MSD - v		
MSA - v			MSA - z			MSD - P			MSD - w		
MSB - j			MSA - R			MSD - R			MSD - x		
MSB - x			MSA - S			MSD - S			MSD - y		
MSB - T			MSA - T			MSD - T			---		
MSB - k			MSA - j			MSD - U			---		

Outputs (Non Default I/O is offset to the right)											
MSA - D			MSB - a			MSC - k			---		
MSA - F			MSB - J			MSC - BB			---		
MSB - F			MSC - L			MSC - MM			MSB - FF		
MSB - G			MSC - z			MSC - FF			MSB - HH		
MSC - H			MSC - y			MSB - A			MSB - DD		
MSC - G			MSC - C			MSB - C			MSB - w		
MSC - F			MSA - a			MSB - t			MSB - EE		
MSC - D			MSA - H			MSB - f			MSB - u		
MSA - Z			MSB - Z			MSC - M			MSA - X		
MSA - b			MSB - H			MSC - DD			MSD - LL		
MSB - E			MSC - K			MSC - PP			MSA - CC		
MSB - c			MSC - AA			MSC - HH			MSA - r		
MSC - J			MSC - KK			MSA - DD			MSA - Y		
MSC - h			MSC - w			MSA - e			MSC - A		
MSC - E			MSA - t			MSB - s			MSC - B		
MSC - e			MSA - J			MSB - e			MSC - c		
MSA - s			MSB - Y			MSC - N			MSD - z		
MSA - c			MSB - d			MSC - CC			MSD - AA		
MSB - D			MSC - j			MSC - NN			MSD - BB		
MSB - b			MSC - LL			MSC - GG			MSD - CC		
MSC - i			MSC - JJ			MSB - AA			MSD - DD		
MSC - g			MSC - d			MSB - p			MSD - EE		
MSC - f			MSA - u			MSB - q			MSD - FF		
MSC - x			MSA - d			MSB - GG			MSD - GG		
MSA - E			MSB - r			MSB - BB			MSD - HH		
MSA - G			MSB - K			MSB - CC			MSD - JJ		

Use this page with TS1 I/O and disregard the two prior TS2 I/O pages.

Internal Logic			
Step	Inst.	Description	Comment
1			
2			
3			
4			
5			
6			
7			
8			
9			
10			
11			
12			
13			
14			
15			
16			
17			
18			
19			
20			
21			
22			
23			
24			
25			
26			
27			
28			
29			
30			
31			
32			
33			
34			
35			
36			
37			
38			
39			
40			
41			
42			
43			
44			
45			
46			
47			
48			
49			
50			
51			
52			
53			
54			
55			
56			
57			
58			
59			
60			

Internal Logic cont.			
Step	Inst.	Description	Comment
61			
62			
63			
64			
65			
66			
67			
68			
69			
70			
71			
72			
73			
74			
75			
76			
77			
78			
79			
80			
81			
82			
83			
84			
85			
86			
87			
88			
89			
90			
91			
92			
93			
94			
95			
96			
97			
98			
99			
100			
101			
102			
103			
104			
105			
106			
107			
108			
109			
110			
111			
112			
113			
114			
115			
116			
117			
118			
119			
120			

Glossary

Add-Only	When using coordination, a mode of offset seeking that adds time to the cycle length by elongating allowable phase intervals on a second-by-second basis.
Alternate Transit Phase Force-Offs	A secondary use of coordination plans. Allows plans 17-32 to be used for transit priority, in order to set new force-off times for active transit phases.
Alternative Permissive	A permissive setting of '0' for a coord plan. The coordinator will automatically calculate all permissives. Each permissive begins at the earliest of local zero or its ring yield point.
Anti-trap Logic	Functions which when activated are intended to prevent vehicles from being caught in a "yellow trap".
Auto Max	The upper limit which the max time value can obtain through an automated adjustment process which incrementally increases the max time by the Max Extend value.
Auto Ped Clear	When enabled, via program entry, this feature prevents the pedestrian clearance interval from being terminated by the Interval Advance input.
Average Plan (1 or 2) Threshold (Proactive Plan Selection)	There are two thresholds one for plan 1 & one for plan 2. This is the target VPLUSKO for selecting these plans in Average Proactive Plan Selection.
Barrier	The dividing line crossing both rings, in dual operation, which separates compatible phase combinations. Usually it divides phases associated with North/South versus East/West.
Border Crossing (Proactive Plan Selection)	The time at which the coordinator enters or exits Inbound or Outbound Proactive Plan Selection. A border is crossed based on traffic flow tests against various thresholds.
Bus Extend	A transit priority setting that limits the amount of time that the transit phase can extend beyond its normal max time.
Call	A registration of a demand for right-of-way by traffic (vehicles or pedestrians) to a controller unit.
Call Mode (Service Plan)	Per phase recall status which overrides the normal recall status programming.
Change I/O	A feature that allows the I/O to the reconfigured without reinitializing (restarting) the controller.
Change Sequence	A feature that implements changes to the phase sequence and/or overlap assignments without reinitializing (restarting) the controller.
Checksum Failure	Indication of a corrupt database which is determined by a 16-bit cyclic redundancy check (CRC).
Circuit Overrides	Manually overriding time clock circuit functions by forcing either an ON, OFF or TOD (clock activated) state via program entry.
Clear Transit Call	Inputs that are available to terminate transit priority service.
Clock Reset Time	The time to which the internal clock will be reset when the Clock Update input is toggled. (See Timed Reference).
Comm (Communication)	A Coordination Plan Mode option which allows coord plans to be selected through modem communications by a remote local controller operating in System Mode.

Compatibility Line	(See Barrier).
Conditional Ped	A per phase function which allows up to two ped services after the start of green. Free operation only (see Late Ped).
Conditional Service	A dual-ring feature which allows re-service to an odd phase (left turn) once the opposing through phase has gapped-out. The re-service is conditioned by the time remaining in the adjacent through phase's Max time.
Connector Type	The type of connectors used for the controller's main I/O. For a standard 2070N the connectors are of the A/B/C/D type.
Coord Late Left Turn	A special coordination feature that allows a 2nd period of potential service of a leading left turn, after its normal force-off.
Coord Plan	A set of program parameters which enable a controller to operate in coordination with other controllers. There are 32 unique coord plans available in the Voyage software.
Coord Walk Rest Off	A type of coordinated operation in which the coord phases rest in green/don't walk while waiting for a serviceable conflicting call. The yield point occurs at the beginning of coord phases yellow clearance.
Coord Walk Rest	A type of coordinated operation in which the coord phases stay in green/walk until a point in the cycle equal to the yield point minus the duration of the flashing don't walk interval. The yield point normally occurs at the local zero reference, which is the end of coord phases flashing don't walk. The user can set the yield point to a non-zero value.
Coordination Failure	Failure of the controller to answer a serviceable conflicting call within 2 cycles, following a Coord Fault. Coord shall be disabled until maintenance action taken.

Coordination Fault	Failure of the controller to answer a serviceable conflicting call within 2 cycles, only during coordination.
Cycle Failure	Failure of the controller to answer a serviceable conflicting call within 2 cycles, following a Cycle Fault. Intersection will be placed in flashing operation.
Cycle Fault	Failure of the controller to answer a serviceable conflicting call within 2 cycles.
Cycle Length	The total time to complete one sequence of signalization around an intersection. In an actuated controller the cycle length can vary depending on the presence of calls on all phases. During coordination, the programmable value called “cycle length” provides maximum cycle duration.
Day Program	A series of time-dependent controller functions programmed to occur on given days. (Refer to Time Clock programming).
Detector Delay	A per-detector-input function which pertains to the call phase only, during the associated red interval. The presence of a call causes the delay timer to time down and will place a call only when the timer reaches zero.
Detector Disconnect	A per-detector-input function which pertains to the call phase only, during the associated green interval. Allows the detector to become inactive after gap-out or time-out.
Detector Extend	A per-detector-input function which pertains to the Extend phase only, during the associated green interval. Each detector actuation allows the passage timer to be reset up to the programmed max time or force-off setting.
Detector Failure Monitoring	A set of per-detector-input functions which allow for automated monitoring of high or low activity.
Detector Inhibit	A time clock activated function which allows selected detectors to be disabled/enabled.
Detector Simulator	A ‘bench’ simulation module that will generate calls on any selected combination of the 32 local detectors. The user sets values to make the frequency and duration of the pulses to the detectors simulate specific traffic flow characteristics.
Detector Stretch	A per-detector-input function which pertains to the extend/switch phases only, during the associated green interval. Stretches the end of the detector pulse by the programmed value.
Detector Switch	A per-detector-input function which pertains to the Switch phase only, when the Switch phase is green and the Extend phase is not green. Each detector actuation allows the passage timer to be reset up to the programmed max time or force-off setting.
Don’t Walk	A per-phase interval which provides a timed flashing don’t walk indication, from 0 – 255 seconds, to pedestrians so they may safely cross the street.

Dual Entry	A mode of dual-ring operation where one phase in each ring must be in operation. If a call does not exist in one ring when the barrier is crossed, a phase is selected in that ring in a pre-programmed manner.
Dual Ring Phasing	A phasing sequence where two interlocking rings of phases are arranged to time in a preferred sequence which allows concurrent timing of a phase in each ring, subject to the restraint of the barriers.
Dwell	A method of coord offset seeking in which the controller will remain (dwell) at cycle zero until in step or a programmed dwell time is exceeded. A separate dwell time can be set for each of the 32 coord plans.
Dynamic Phase Length	A method to give the current phase more or less Green time based on the relative demands on the current phase and the next phase(s). Done by increasing or decrease force-offs during coordination and Max Green during Free.
Entry % (Proactive Plan Selection)	A VPLUSKO ratio that must be met before moving into Proactive Plan Selection. One for Inbound and one for Outbound.
Exit % (Proactive Plan Selection)	A VPLUSKO ratio that must be met before moving out of Proactive Plan Selection. One for Inbound and one for Outbound.
Exception Day	A special Time Clock Program which occurs only on a pre-programmed day-of-week/week-of-month or calendar date.
Fail Max	Pre-established max times used in the event of detector failure. Fail Max times are only effective when the associated Max Plan is enabled.
Fail Times, Preempt	If programmed, the preempt Fail Timer will begin timing down upon activation of the preempt input. If the timer expires, the intersection will be placed in flash.
Fast Way	A method of coord offset seeking in which the controller will continuously seek, on a second-by-second basis, to get in step by effectively shortening or lengthening the cycle.
Flash Mode, Preempt	Programmable settings which can be used to produce a flashing preempt output.
Flashing Yellow Left Turn Arrow (FYLTA)	A form of left turn phasing that allows protected/permitted and/or permitted/protected operation. It allowsa lagging protected left turn without creating a trap, thus is very beneficial in coordinated systems.
Free Threshold (Proactive Plan Selection)	In Average Proactive Plan Selection this is the target VPLUSKO for moving out of an average plan and into Free.
Free Walk Rest	A per phase function which allows a pedestrian service to rest at the end of walk until a serviceable conflicting call is registered. Free operation only (see Coord Walk Rest)

Gap Reduction	A timing strategy in which the gap time between vehicle actuations on the phase displaying green is reduced. (See Time To Reduce (TTR), Time Before Reduction (TBR) and Minimum Gap).
Green	A per-phase interval which, when active, will time for at least the Min Green period and will last no longer than the Max time (assuming free operation).
Group Max Times	A portion of the transit priority programming that allows shorter max and walk times in order to shorten non-transit phases.
Hardwire	A Coordination Plan Mode option which allows coord plans to be selected by external, 24V DC input.
Hold	The Hold function is applied to the coordinated phases at the end of all minor phase permissive periods.
Hold On Input	A preemption feature which, when enabled, causes the associated preempt interval to remain active as long as the preempt input is true.
Inhibit Min Yellow	A feature which allows yellow times to be programmed for less than 3 seconds.
Initialization	The programmed display condition which will be initiated upon power-up or re-start of the controller unit.
Input	A general term for any 24V DC, ground true signal which is sent to the controller. Inputs include vehicle calls, pedestrian calls, etc.
Internal Logic	A set of programming instructions which may be used to manipulate the operation of the controller unit.
Interval	The time period allotted to a specific control function. Does not necessarily result in a signal change, but does indicate the transfer of control within the unit to another circuit. Min Green interval, Extension interval, etc.
Interval Advance	An input which when toggled causes immediate termination of the interval in the process of timing. Often used in conjunction with Manual Control Enable (MCE).
Lane Factor	In Dynamic Phase Length this is the propensity of the traffic to queue in the predominate lane.
Last Car Passage	A feature normally used in conjunction with gap reduction timing to ensure the “last car”, prior to gap-out, receives a full passage countdown.
Late Ped	A feature which, when enabled, allows a ped call to be served after the start of the green interval.
Lead/Lag Phasing	A feature which makes it possible to reverse the phase sequence on a phase pair basis. The phase pairs, 1-2, 3-4, 5-6, 7-8 when reversed, will lag the odd phase behind the even phase.
Local ID	The programmable ID number assigned to the local controller to facilitate data communications.
Master System Detector	A system detector of an intersection in a system that is polled by the master, for processing by the master. There are 16 per master.
Max 1/2	The normal max green time settings available on a per phase basis.
Max Extension	A programmable time setting which can be incrementally added to the current max time value upon successive max-outs.

Max Mode (Max Plan)	A program entry in a Max Plan which allows the selection of the source of the max time value on a per phase basis.
Max Normal (Max Plan)	The per-phase Max time values enabled with the Max Plan.
Max Plan	Eight alternative sets of Max time values and Failed Max time values which can be activated by time clock, external input, internal logic or coordination plan.
Max Recall	A per-phase function which places constant vehicle demand on the programmed phases.
Max Variable Initial	A per-phase, actuated controller setting associated with Volume Density timing. It is the longest possible extension given to Min Green. (See Seconds-per-Actuation).
Maximum VPLUSKO (Proactive Plan Selection)	During a session of Inbound or Outbound Proactive Plan Selection this is the maximum value of VPLUSKO, for the preferred direction, that was attained. Used in the setting one of the threshold for exiting PPS.
MCE (Manual Control Enable)	An input which puts vehicle and pedestrian calls on all phases, stops timing in all intervals except vehicle change and clearance intervals and inhibits the operation of Interval Advance on vehicle change and clearance intervals. Often used in conjunction with Interval Advance.
Memory	A preempt or transit priority function which, when enabled, ensures a call is remembered until the function is serviced, even if the call is removed prior to service.
Min Recall	A per-phase function which, when activated, ensures the phase will always serve at least the Min Green time, regardless of detector inputs
Minimum Cycle Lengths	A coord feature which places a lower limit on the cycle length when the cycle length is being reduced during Fast Way offset seeking.
Minimum Gap	During the process of Gap Reduction, it is the shortest time to which the passage timer (gap) will reduce.
Minimum Green	The guaranteed green time of a phase.

Minimum Re-service, Preempt	A preemption feature which prevents the associated preemption sequence from being re-served, following exit from a previous service, until the programmed time expires.
Modem Port	The communication port on the controller assigned to support external modem communications (between controller and dial-up modem).
MOE Log Period	The programming logging period during which MOE statistics will be recorded and logged. May be any number of minutes divisible into 60. There are 1500 separate MOE logs, or over 15 days worth if the MOE Log Period is set at 15 minutes.
Non-actuated	Refers to a type of pretimed control, where a phase is not conditioned by a vehicle call.
Normal Permissive	A type of coordination permissive period which begins at the yield point (usually cycle zero) and ends at the programmed time. During the permissive period, all vehicle omits are lifted on non-coordinated phases.
Not Ped Overlap	A type of overlap operation typically used for right turn overlaps which conflict with peds.
Offset	During coordination, the desired (programmed) difference between local cycle zero and master cycle zero. The Offset time should be set to achieve a continuous progression of vehicles through a series of intersections.
Offset Adjustment (Platoon Progression)	In Platoon Progression this is used to proportionately decrease the offsets of the intersection in the system as the VPLUSKO over the mid-system critical detectors raises above a threshold.
Offset Seeking	A process performed by the local controller to get in step (in sync) with the master controller. When in step, the local cycle zero should differ from the master cycle zero by the programmed offset value. There are three modes of Offset Seeking available in the Voyage software; Add Only, Dwell, and Fast Way.
Omit	A command which causes omission of a phase. Phase service is prevented by masking demand for the phase.
Output	A general term for any 24V DC, ground true signal which is sent from the controller. Outputs include vehicle phase intervals (red, yellow, green), pedestrian phase intervals (walk, don't walk), etc.
Overlap	A right-of-way indication which allows a traffic movement when the right-of-way is being assigned to two or more traffic phases.
Overlap Delay	A feature which allows an overlap to clear to yellow after the associated parent phase clears to yellow, by the programmed delay time.
Overlap Output Inhibits	A powerful feature which allows specific overlap intervals (red, yellow, or green) to be inhibited when desired phase conditions are met.
Override Times, Preempt	If programmed, the preempt Override Timer will begin timing down upon activation of the preempt input. If the timer expires, the preempt call will be disabled until the input goes false.
Passage	A per-phase timer which begins timing down the programmed value upon the termination of a vehicle actuation and is reset with an additional actuation. If the timer reaches zero, the phase will gap-out. Normally set so a vehicle may travel at a given speed from the detector to the nearest point of conflicting traffic.
Ped Clearance	A programmable, per-phase interval, during which

	the don't walk indication is flashed, which follows a walk interval.
Ped Overlap	(See the definition of Overlap). Ped Overlaps allow the walk indication to be maintained through the end of the first parent phase if the second parent phase is next.
Ped Override Mode	A clock circuit function related to coordinated operation which, when enabled, allows the ped split to be larger than the vehicle split called for in the coord plan. This function is beneficial because it allows phases to be over-timed (to run past the force-off point) without skipping or short-timing subsequent phases.
Ped Recall	A per-phase function which ensures pedestrian walk and clearance intervals are timed once during each cycle without the necessity of a push-button actuation.
Ped Recycle	The Pedestrian Recycle input allows a pedestrian movement to be recycled when Hold is applied.
Phase	Those green, change and clearance intervals assigned to any independent movement of traffic.
Platoon Progression	A coordination mode for a highly directional arterial. A platoon is measured each cycle and then rippled forward through the entire system. The cycle length is always changing from cycle to cycle based on the needs of the platoon.
Preemption	The transfer of the normal control of signals to a special control mode for the purpose of safely servicing railroad crossings, emergency vehicle passage, mass transit vehicle passage, and other special tasks. Preemption involves three distinct steps; exiting normal traffic control, running the programmed Preemption Sequence and returning to normal control.
Preempt Priority Return	Priority Return is enabled if the last instruction in a preempt sequence is 95. Priority Return is used to return to those non-entry phases that were Green, if they had not been able to display a Green longer that a set value.
Preempt Sequence	A programmable set of sequential instructions which dictate the operation of the controller during a preempt event.
Proactive Plan Selection	Proactive Plan Selection is an overlay on top of TOD operation. For a peak period, Proactive Plan Selection is used to choose between three different cycle lengths, it also allows for considerable variance in when the peak plan will begin and end. In non-peak periods Proactive Plan Selection is used to choose between two different cycle lengths, or Free.
QPLUSKO	QPLUSKO is the queue plus an addition based on the percent occupancy of the back detector. For a multi lane approach QPLUKO is predicted for the lane that tends to have the highest volume.
Red	A per-phase clearance interval, which may follow a yellow change interval, during which both the terminating phase and the next phase display red for a period of 0 – 25.5 seconds.
Red Clearance Extension	The length of the red clearance interval can be dynamically lengthened based on the presence of a late arriving call.
Red Decimal Off	A per-phase function which, when enabled, allows the red interval to time from 0 - 255 seconds, otherwise the range is set at 0 - 25.5 seconds. Also allows the phase to Red Revert back to green in the absence of a conflicting call.

Red Lock	A per phase function which, when enabled, ensures that a call received during red is remembered until the phase is serviced, even if the call is removed prior to service.
Red Rest	A feature which will cause the controller to display red on all phases instead of resting in green of the last phase served, in the absence of demand. Programmable on a per-ring (clock circuit) or per-phase (Service Plan) basis.
Red Revert	Provided in the Voyage software to assure at least a minimum red interval of 2 seconds, following the yellow change interval, before returning to green of the same phase.
Relays, Internal Logic	A feature of Internal Logic that allows true/false status messages to be sent between controllers.
Repeated Phase Service	A coordination feature that allows the coord phase to terminate more than once in a given cycle if there are permitted, non-coord phases that have demand.
Restrictive Phases	A function which modifies the sequence to ensure two phases do not time together. The phases must be on the same side of the barrier, in different rings, with one leading and one lagging.
Ring	An ordered sequence of mutually exclusive phases.
Seconds per Actuation (S/A)	A per-phase, actuated controller setting associated with Max Variable Initial. When a vehicle passes over a detector a tabulation begins where one S/A value is added for each actuation. The S/A amount is compounded until it overrides the Min Green period and then becomes the new Min Green (See Max Variable Initial).
Sequence	The order in which signal intervals are displayed around an intersection when the intersection is under actuated control and calls are placed on all phases.
Sequential Phasing	A phasing sequence in which all of the phases are in the same ring and no two phases will be displayed simultaneously.
Service Plan	Eight alternative sets of phase timings and recall modes which can be activated by time clock, external input, internal logic or coordination plan.
Simultaneous Gap-Out	The default mode of operation in the Voyage software for dual ring control. Two phases waiting to cross the barrier must “simultaneously gap-out” (or max-out) in order to cross the barrier. SGO may be disabled by time clock or manual override.
Soft Flash	An alternative method for placing the intersection in flashing operation by toggling the phase outputs to the load switches.
Soft Recall	A per-phase function which behaves like Min Recall, except the phase is only served when there are no other calls. Soft recall can also be delayed for a user specified length of time.
Special Intervals, Preempt	Special Intervals are available to be used as steps in the preempt sequence. They allow the phase and overlap outputs to be manipulated as desired.
Split Variant Operation	3 different splits are allowed for the intersections in a system, based on the rise and fall of main street demand. During periods when the main street flow is moderate the split for the side street is increased. During periods of heavy main street flow the split for the side is decreased.
Sync Reference Mode	The mode used to determine the time clock reference for the local cycle during coordination. (Refer to the manual for information on the two modes available in the Voyage software,

	“Timed Reference” and “By Event”).
System	A group of intersections that share the same master.
System Detector	A local detector that can also be polled for use at the master. Up to 8 of the 32 local detectors at an intersection can also be system detectors.
System ID	The programmable ID number assigned to the group of controllers which constitute a “system” to facilitate data communications.
System Mode	A programmable setting that determines if the controller will operate only as local controller (default) or as both a master and a local controller.
System Port	The communication port on the controller assigned to support system communications (between local and master controllers).
Time Before Reduction (TBR)	During the process of Gap Reduction, it is the time period before the Gap Reduction takes place.
Time Clock	A device for the automatic selection of traffic signal modes of operation in a manner prescribed by a predetermined time schedule.
Time Clock Circuit	An internal, software generated “input” to the controller which may be enabled by a Time Clock Day Program, an Internal Logic program, a Coord Plan or manual override.
Time To Reduce (TTR)	During the process of Gap Reduction, it is the total time period for the Gap Reduction process to take place.
Timed Reference	The time to which the internal clock will be reset when the Clock Update input is toggled.

Transit Priority	A set of programmable functions that allow the presence of a transit vehicle to adjust the timing of a controller to cause the vehicle to experience a shorter delay at the intersection.
Truck Priority	A set of programmable functions, used in conjunction with transit priority, that allows the presence of a truck to extend phase green.
Variable Permissive	A type of coordination permissive structure in which each phase has a separate permissive which begins at the yield point (usually cycle zero) and ends at an automatically calculated point prior to the phase force-off. During the permissive period, the vehicle omit is lifted on the associated non-coordinated phase.
Volume Density	A process used with detectors located at, or at sufficient distance in advance of, the intersection which makes use of vehicle actuation quantities and time-of-waiting of vehicles to vary green intervals for increased capacity and minimized delays.
Volume Log Period	The programming logging period during which Volume statistics will be recorded and logged. May be any number of minutes divisible into 60. There are 1500 separate Volume logs, or over 15 days worth if the Volume Log Period is set at 15 minutes.
VPLUSKO (Proactive Plan Selection)	The flow rate (vehicles/hour) over a detector plus the occupancy (%) times a factor (k).
VPLUSKO Target (Proactive Plan Selection)	The VPLUSKO value that is the center of the range of values that will call the medium cycle length during Proactive Plan Selection.
Walk	A per-phase interval which provides a timed indication, 0–255 seconds, to pedestrians so they may safely begin to cross the street.
Week Program	A time clock program used to determine the specific Day Program used on each day of the week.
Wig Wag	Describes the flashing operation of an output. Wig is in phase with the Flashing Logic Output (displayed on the front of the 2070). Wag flashes oppositely from Wig.
Year Program	A time clock program used to determine the specific Week Program used on each of the 53 weeks in the year.
Yellow	A per-phase change interval, which follows a green interval, and times for a period of 3 – 25.5 seconds. (See Inhibit Min Yellow).
Yellow Lock	A per phase function which, when enabled, ensures that a call received during yellow or red is remembered until the phase is serviced, even if the call is removed prior to service.
Yield Point	During coordination, the yield point represents the point in the cycle when permissives are opened for all non-coord phases. The yield point defaults to zero, but can be set to any non-zero value. There is a separate yield point for each ring.

Index

2

2070, *16*, *21*, *22*, *23*
210 Conflict Monitor, *22*, *23*

3

332 Cabinet, *289*

5

5-Section Head, *99*, *138*

A

Add Only, *158*, *404*
Advanced Warning Outputs, 127
Alarm, *48*, *295*
Alternate Transit Phase Force-Offs, *268*, *404*
Alternative Permissive, *152*, *153*, *404*
Anti-Trap, *101*, *138*, *404*
Arrow Keys, *14*
Auto Max, *113*, *404*
Auto Ped Clear, *404*
Auxiliary Inputs, *290*
Auxiliary Outputs, *302*
Average Plan Threshold, *351*, *404*
Average Smoothed VPULSKO, *339*

B

Bad Coord Plan, *32*, *39*
Barrier, *94*, *95*, *404*
Basic Status, *29*
Baud Rates, *255*
Border Crossing, *404*
Bus Extend, *259*, *261*, *404*

C

C1/C11, *287*, *288*, *300*, *301*
Call, *116*, *404*
Call Mode (Service Plan), *404*
Calls Through the Keyboard, *15*
Central Port, *71*, *256*
Change I/O, *310*, *312*, *404*
Change Sequence, *114*, *126*, *141*, *404*
Check, *303*
Checksum Failure, *30*, *405*
Circuit, *208*
Circuit Overrides, *405*
Clear Transit Call, *260*, *262*, *296*, *405*
Clock Reset, *294*, *405*
Coded Status Bits, *46*, *304*
Comm (Communication), *405*
Communication and Reports, *240*
Communication Ports, *240*
Communications, *69*
Compatibility Line, *405*
Conditional Ped, *110*, *405*
Conditional Reservice, *137*
Conditional Service, *34*, *98*, *137*, *199*, *405*
Conflict Monitor Status, *295*
Connector I/O, *80*
Connector Type, *310*, *405*
Controller, *93*, *109*
Controller Default Data Load, *365*
Coord Delta Force-Off, *164*, *177*
Coord Late Left Turn, *203*, *405*
Coord Late Left Turn, *160*
Coord Mode, *147*
Coord Plan, *36*, *42*, *173*, *405*
Coord Status, *41*
Coord Timing, *35*
Coordinated Phases, *149*
Coordination, *144*
Coordination Examples, *182*
Coordination Failure, *32*, *39*, *405*
Coordination Fault, *32*, *406*
Coordination Walk Rest, *47*, *148*, *173*, *405*
Coordination Walk Rest, Disable, *204*
Copy Database, *370*
Copyright Display, 27, 374
CRC, *69*
Cycle Failure, *50*, *406*
Cycle Fault, *32*, *39*, *406*
Cycle Length, *144*, *406*
Cycle Timer, *36*

D

Database Backup Load, *364*
Database Clear, *370*
Day Program, *56*, *205*, *208*, *406*
Daylight Savings Time, *205*, *210*
Delay, *49*, *116*, *215*, *225*
Delay, Conditional, *117*
Detector, *49*, *115*, *120*, *121*, *202*, *291*
Detector Definition Table, *338*
Detector Delay, *406*
Detector Disconnect, *406*
Detector Extend, *406*
Detector Fail Monitor, *119*
Detector Failure Monitoring, *406*
Detector Inhibit, *406*
Detector Mode, *116*
Detector Plans 2-4, *120*
Detector Simulation, *121*
Detector Simulator, *32*, *406*
Detector Stretch, *406*
Detector Switch, *406*
Direct Connect, *16*, *240*, *242*
Discharge Rate, *122*
Disconnect, *116*
Don't Walk, *303*, *406*
Door Open, *295*
Dual Entry, *136*, *407*
Dual Ring, *94*, *407*

Dwell, *36*, *175*, *407*
Dynamic Phase Length, *161*, *407*
Dynamic Phase Length Inhibit Shortening, *203*

E

ENT Key, *14*
Entry %, *407*
ESC Key, *13*
Ethernet, *16*
Ethernet communications, *246*
Event Time, *208*
Exception Days, *205*, *210*, *407*
Exclusive Ped, *32*, *200*
Exclusive Phase, *105*
Exit %, *407*
Exit to Coord Plan, *219*, *220*
Exit to Free, *221*
Exit to Max Plan, *221*
Extend, *116*
External Inputs, *285*
External Outputs, *297*
External Start, *31*, *47*, *293*

F

Fail Max, *50*, *141*, *407*
Fail Timer, *61*, *223*, *407*
Fast Way, *157*, *407*
Faults Status Display, 54
First All Red, *124*
Flash, *31*, *124*
Flash Mode, Preempt, *407*
Flash-In, *295*
Flashing Logic, *304*
Flashing Yellow Left Turn Arrow, 133, 217
Force-Off, *93*, *153*, *175*, *293*
Free, *295*
Free Delta Max, *164*
Free Threshold, *351*, *407*
Free Walk Rest, *110*, *407*
FSK Modem, *21*, *254*
Function Logs, *251*
FYLTA, 133

G

Gap Reduction, *97*, *408*
Gap-Out, *93*
Gateway IP Address, *255*
Green, *303*, *408*
Green Extension, *127*
Group Max Times, *259*, *408*

H

Hardware Adjustments, *21*, *22*, *23*
Hardwire, *38*, *40*, *42*, *48*, *200*, *408*
Hardwire Control, *295*
Hold, *36*, *154*, *292*, *408*
Hold on Input, *408*
Hold On Input, *59*, *213*, *231*
Hot Key, *14*

I

Inhibit, *115*, *202*
Inhibit Max Termination, *33*, *292*
Inhibit Max Termination, Disable, *110*
Inhibit Min Yellow, *141*, *408*
Inhibit Overlap, *201*
Inhibit Simultaneous Gap-Out, *34*, *135*
Initialization, *408*
Initialize, *124*
Input, *80*, *408*
Input Codes, *321*, *322*
Input/Output Configuration, *285*
Installation, *16*
Internal Logic, *40*, *67*, *306*, *313*, *314*, *408*
Internal Logic Counters, *68*, *327*, *328*
Internal Logic Examples, *330*
Internal Logic Latches, *68*, *326*
Internal Logic Outputs, 125
Internal Logic Phase Condition, *320*
Internal Logic Timers, *68*, *325*
Intersection Name, *372*
Interval Advance, *47*, *293*, *408*

K

Keyboard, *12*

L

Lane Factor, *164*, *177*, *408*
Last Car Passage, *97*, *135*, *408*
Late Ped, *173*, *408*
Lead/Lag, *51*, *106*, *107*, *115*, *408*
Light Rail Train, *61*, *224*, *231*
Local ID, *243*, *255*, *408*
Local Zero Reference, *144*, *147*
Log, *77*, *201*, *249*, *377*

M

Main Menu, *27*
Manual Control, *39*, *47*, *294*
Manual Control Enable, *409*
Master Cycle Timer, *36*
Master System Detectors, *85*, *359*, *409*
Max 1/2, *111*, *112*, *293*, *409*
Max Extension, *112*, *409*
Max Mode, *409*
Max Normal (Max Plan), *409*
Max Plan, *140*, *175*, *409*
Max Recall, *109*, *409*
Max Variable Initial, *409*
Maximum Variable Initial, *112*
Maximum VPLUSKO, *409*
Max-Out, *93*
Max-Out Recall Inhibit, *110*
Memory, *215*, *225*, *409*

Min Recall, *109*, *294*, *409*
Minimum Cycle Length, *158*, *409*
Minimum Gap, *97*, *112*, *409*
Minimum Green, *111*, *409*
Minimum Reservice, *215*, *225*
Minimum Re-service, *410*
Modem, *245*
Modem Initialization String, *257*
Modem Port, *410*
MOE, *202*
MOE Average Green, *74*
MOE Log, *74*
MOE Log Period, *410*
MOE Logs, *250*, *257*
Monitor Status, *31*, *48*

N

Network ID, *255*, *256*
Network IP Address, *255*
Next, *303*
Next Key, *13*
No Key, *14*
Non-Actuated, *410*
Non-Directional Option for Proactive Plan Selection, *352*
Normal Permissive, *151*, *153*, *410*
Not Ped Overlap, *126*, *410*
Not Ped Ped Overlap, 133
NWSCentral, *336*

O

Occupancy, *122*
Offset, *41*, *42*, *144*, *157*, *173*, *410*
Offset Adjustment, *170*, *410*
Offset Seeking, *410*
Omit, *154*, *410*
Omit Red Clearance, *293*
Output, *80*, *312*, *410*
Output Codes, *323*, *324*
Overlap, *51*, *95*, *126*, *303*, *410*
Overlap Delay, *410*
Overlap Inhibits, *216*, *226*, *410*
Override Timer, *61*, *221*, *223*, *410*
Override/Fail Times, *227*, *228*

P

Passage, *111*, *411*
PE Delay, *227*
PE Exit Modes, *227*, *228*
Ped Omit, *227*
Ped Overlap, *51*
Ped Override Mode, *158*, *200*, *411*
Ped Recall, *109*, *411*
Pedestrian Clearance, *112*, *304*, *411*
Pedestrian Detectors, *291*
Pedestrian Omit, *44*, *59*, *154*, *216*, *292*
Pedestrian Overlap, 129, *306*, *307*, *411*
Pedestrian Permissives, *153*
Pedestrian Recycle, *292*, *411*
Pedestrian, Dual Enhanced, *201*
Permissives, *151*, *175*
Phase, *303*, *411*
Phase Condition, *313*
Phase Functions, *109*
Phase Omit, *59*
Phase On, *303*
Phase Times, *110*
Phases Used, *50*, *93*, *114*
Phone Numbers, *256*
Platoon Maximum, *178*
Platoon Progression, *39*, *40*, *166*, *177*, *203*, *362*, *411*
Platoon Progression Input Screens, *177*
Platoon Progression Logs, *88*
Platoon Progression Smoothing Factor, *179*
Power-Up, *32*
Power-Up Flash, *124*
PPS New Look, *204*
Preempt, *31*, *58*, *212*, *411*
Preempt Entry Parameters, *214*
Preempt Entry Timings, *216*
Preempt Exit Parameters, *219*
Preempt Inputs, *223*, *296*
Preempt Instruction, *213*, *230*
Preempt Interval, *59*, *408*
Preempt Outputs, *213*, *223*, *306*
Preempt Priority, *61*, *214*, *225*
Preempt Priority Return, 219, *230*, *411*
Preempt Priority Return Sets, *203*, *220*
Preempt Sequence, *230*
Preemption Examples, *233*
Preemption Intervals, *212*, *213*
Proactive Plan Selection, *39*, *41*, 86, *204*, *342*, *411*
Proactive Plan Selection / Split Variant Logs, 90
Proactive Plan Selection Border Crossings, *344*
Proactive Plan Selection for a Directional System, *342*
Proactive Plan Selection Input Data, *360*
Proactive Plan Selection Maximum VPLUSKO, *346*
Proactive Plan Selection w/ Split Variant Operation, *355*
Program Mode, *27*, *93*

Q

QPLUSKO, *162*, *411*
Quad Left Turn, *51*, *114*
Queue-Delay Recovery, *219*, *220*

R

Red, *111*, *303*, *412*
Red Clearance Extension, *143*, *412*
Red Decimal Off, *46*, *141*, *412*
Red Lock, *109*, *412*
Red Rest, *140*, *198*, *292*, *412*
Red Revert, *412*
Relay, Local-to-Local, 317, 319
Repeated Phase Service, *173*, *412*

Reports, *249*
Reset Time/Sync Reference, *210*
Restart, *96*, *124*, *135*
Restrictive Phase, *50*, *107*, *114*, *412*
Ring, *94*, *412*
Run Mode, *26*, *27*

S

S/A, *96*
Saturation, *122*
Schedule Logs, 72
Second Look for Cycle Selection, *351*
Seconds Per Actuation, *96*, *112*, *412*
Security Code, *108*
Sequence, *59*, *103*, *114*, *412*
Sequential Phasing, *51*, *412*
Service Plan, *53*, *139*, *175*, *412*
Simultaneous Gap-Out, *98*, *412*
Smoothed VPLUSKO, *339*
Soft Flash, *31*, *125*, *306*, *413*
Soft Recall, *110*, *413*
Soft Recall Delay, *136*
Special Intervals, *218*, *232*, *413*
Special Sequence, *51*
Split Times, *175*
Split Variant Inbound, *337*
Split Variant Operation, 86, *204*, *337*, *413*
Split Variant Operation Input Data, *361*
Split Variant Operation Logging, *340*
Split Variant Outbound, *337*
Start-Up Failure, *30*
Stop Time, *33*, *39*, *291*
Stretch, *49*, *116*
Switch, *116*
Sync Reference, *42*, *205*
Sync Reference Mode, *413*
System, *81*, *336*, *413*
System Detector, *413*
System Detectors, *84*, *120*, *359*
System ID, *243*, *255*, *413*
System Mode, *248*, *254*, *336*, *413*
System Modes of Operation, *336*
System Port, *254*, *413*
System Run Screens, *81*, *91*

T

TBR, *97*
Test Conditions, *313*, *318*
This Phase Next, *44*, *45*, *93*, *96*
Time Before Reduction, *43*, *112*, *413*
Time Clock, *38*, *40*, *56*, *57*, *197*, *207*, *413*
Time Clock Circuit, *197*, *210*, *413*
Time Clock Ckt Mapping, *176*
Time To Reduce, *112*, *413*
Timed Reference, *413*
TOD Circuit, *197*
Transit Priority, 63, *259*, *414*
Transit Priority Bus Extension, *267*
Transit Priority Group, 64
Transit Priority in Coordination, *261*
Transit Priority in Free, *261*
Transit Priority Inputs, *295*
Transit Priority Log, *77*
Transit Priority Logs, *263*, *264*
Truck Priority, *263*, *269*
TTR, *43*, *97*

U

Utilities, *27*

V

Variable Initial, *96*
Variable Maximum Extension, *112*
Variable Permissive, *414*
Veh Omit, *227*
Vehicle, *154*
Vehicle Omit, *36*, *44*, *216*, *292*
Video Fail, *119*, *294*
Volume, *122*, *202*
Volume Density, *43*, *96*, *414*
Volume Log, *76*
Volume Log Period, *414*
Volume Logs, *249*, *257*
VPLUSKO, 87, *339*, *414*
VPLUSKO Peak, *87*
VPLUSKO Target, *414*

W

Walk, *112*, *304*, *414*
Watchdog, *48*, *305*
Week Program, *56*, *205*, *209*, *414*
Wig Wag, *414*

X

X Omits Y, *101*, *138*

Y

Year Program, *204*, *209*, *414*
Yellow, *111*, *303*, *414*
Yellow Blanking, *102*, *138*
Yellow Lock, *109*, *115*, *414*
Yes Key, *14*
Yield Point, *151*, *175*, *192*, *414*