APPENDICES

APPENDIX A:

STRUCTURAL DETAILS OF THE

HORSETAIL CREEK BRIDGE

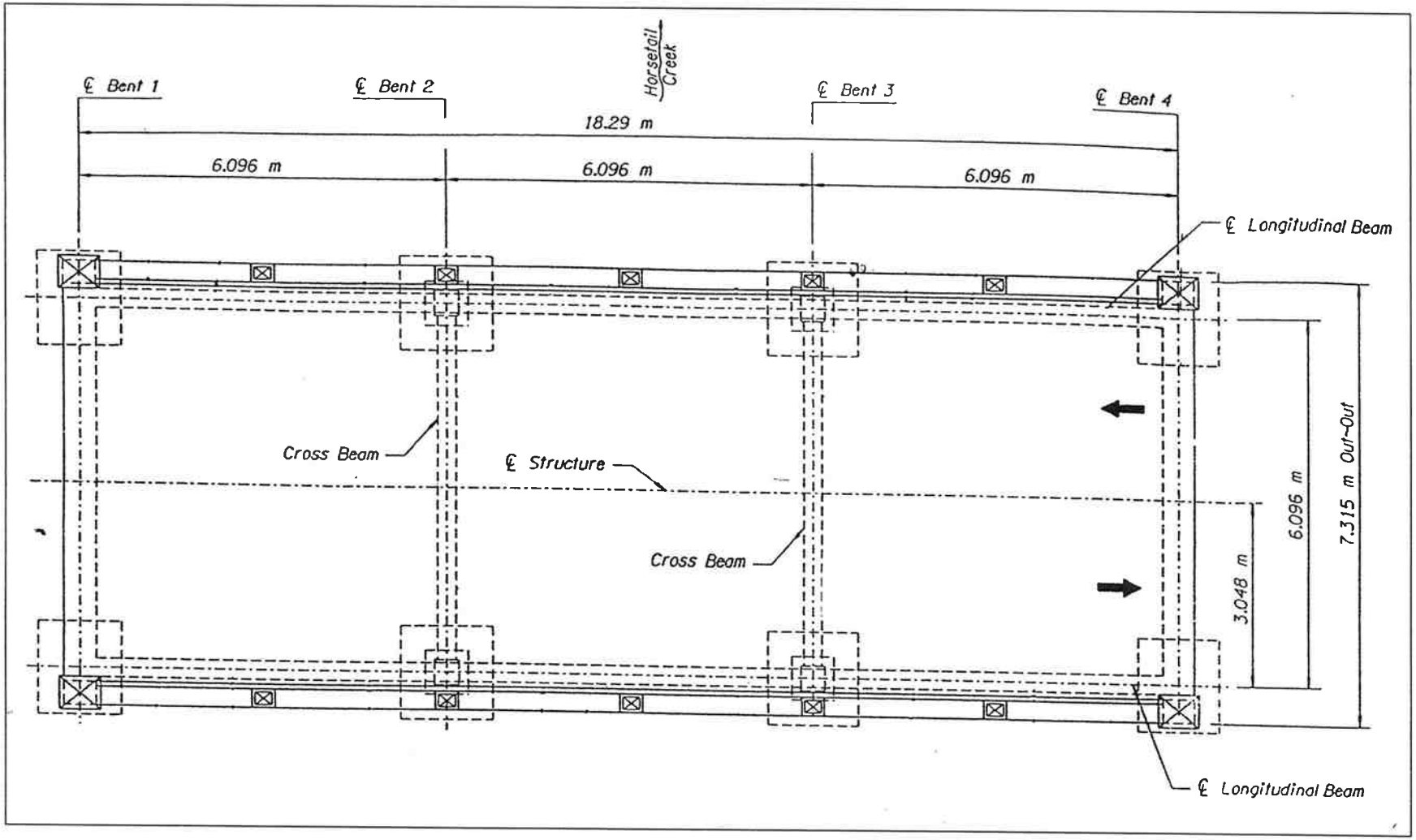

Bridge Plan (Not to Scale)

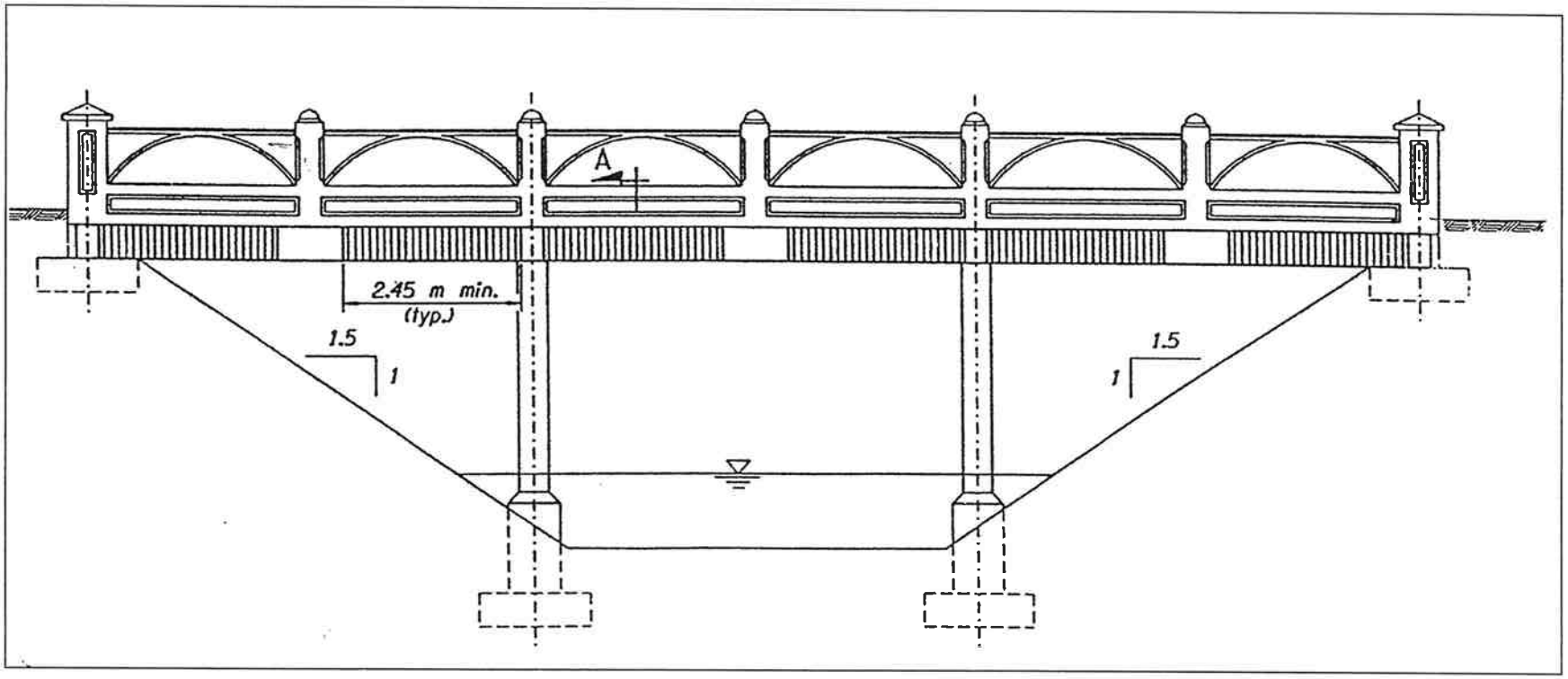

Bridge Elevation (Not to scale)

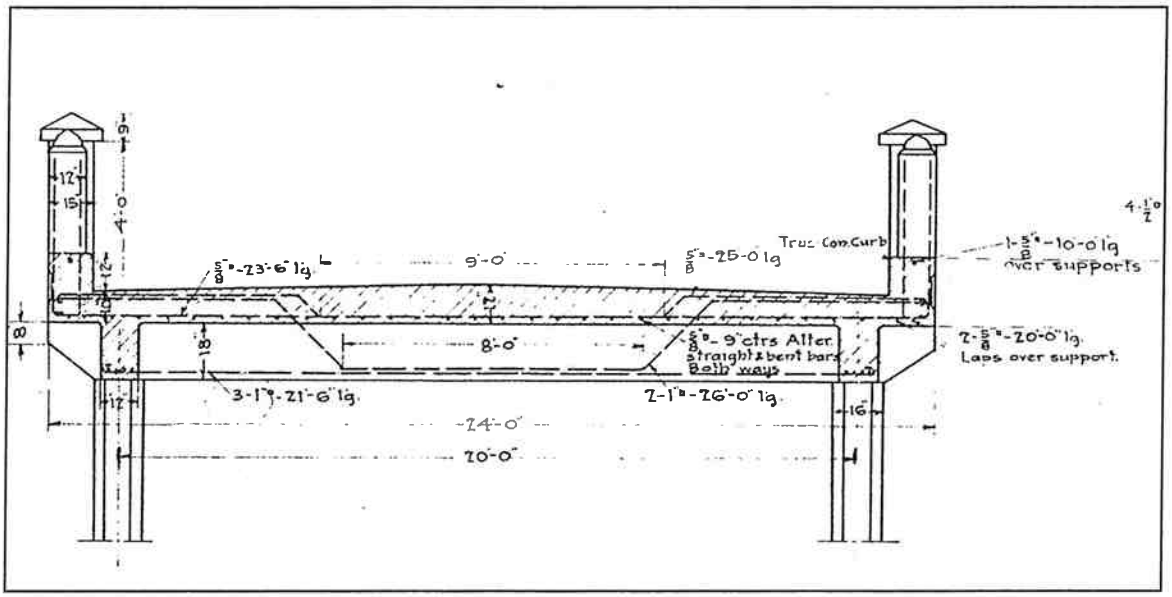

Steel Reinforcement Detail in Transverse Beam

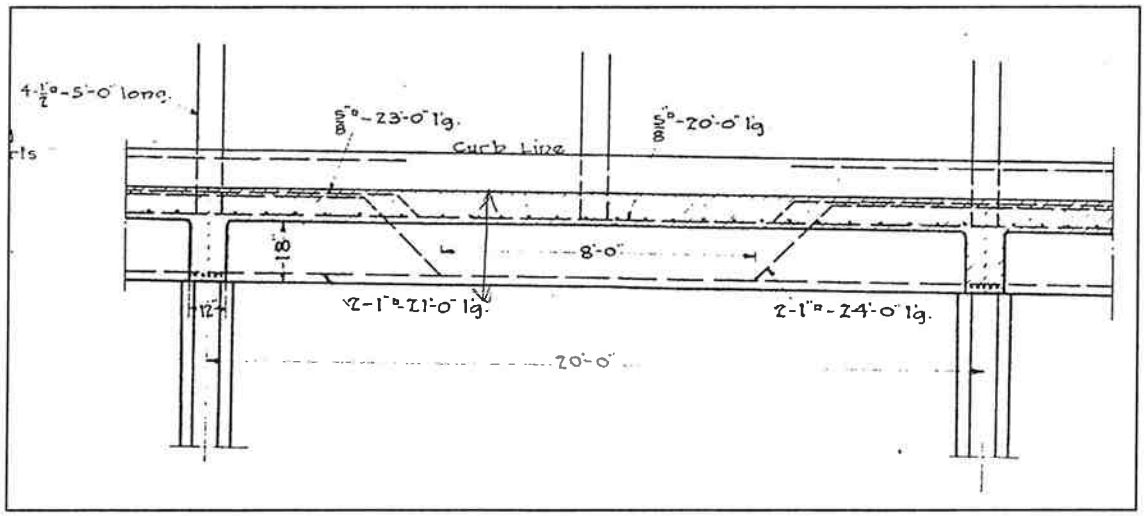

Steel Reinforcement Detail in Longitudinal Beam

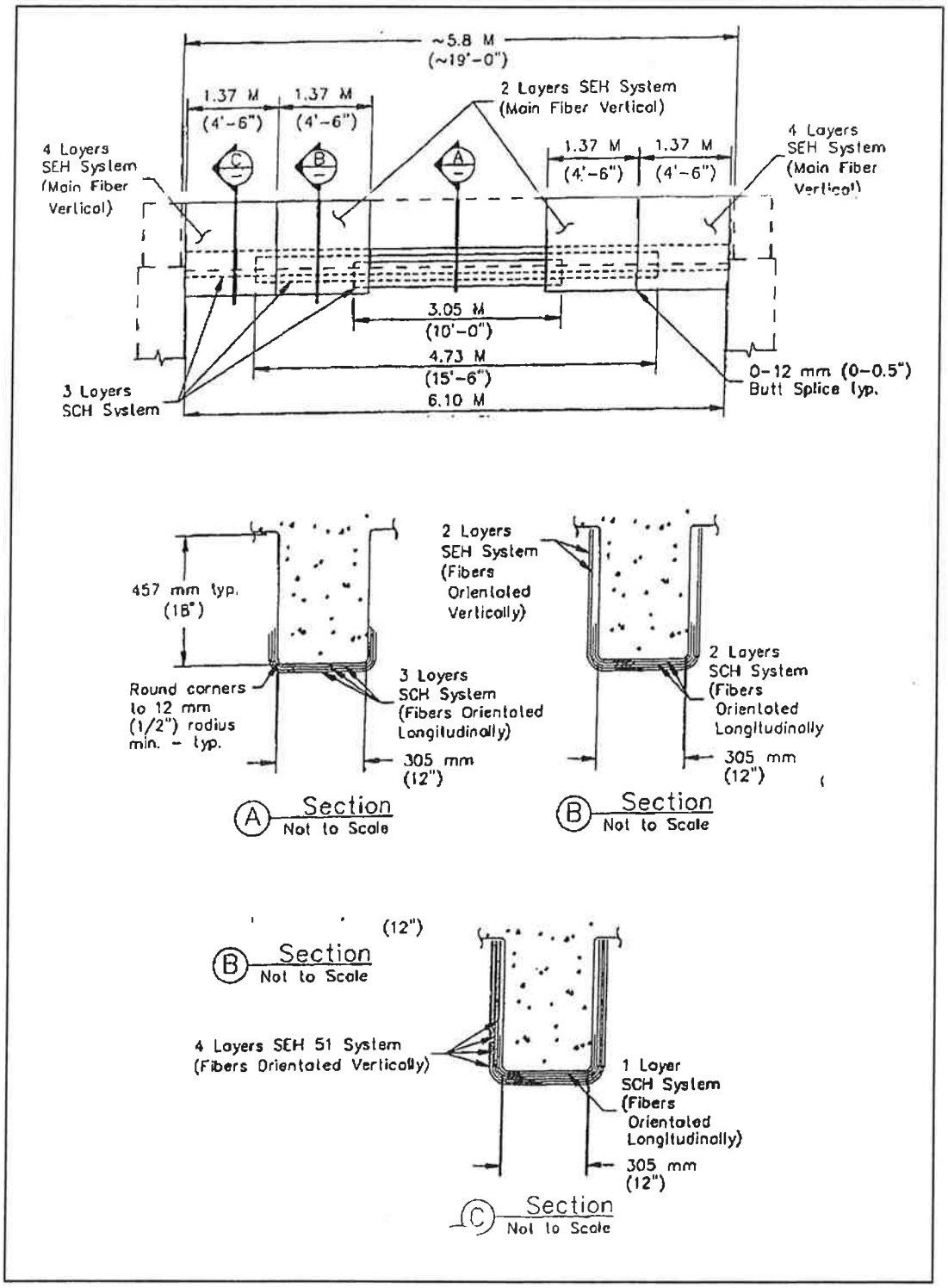

FRP Reinforcement Detail on Transverse Beam

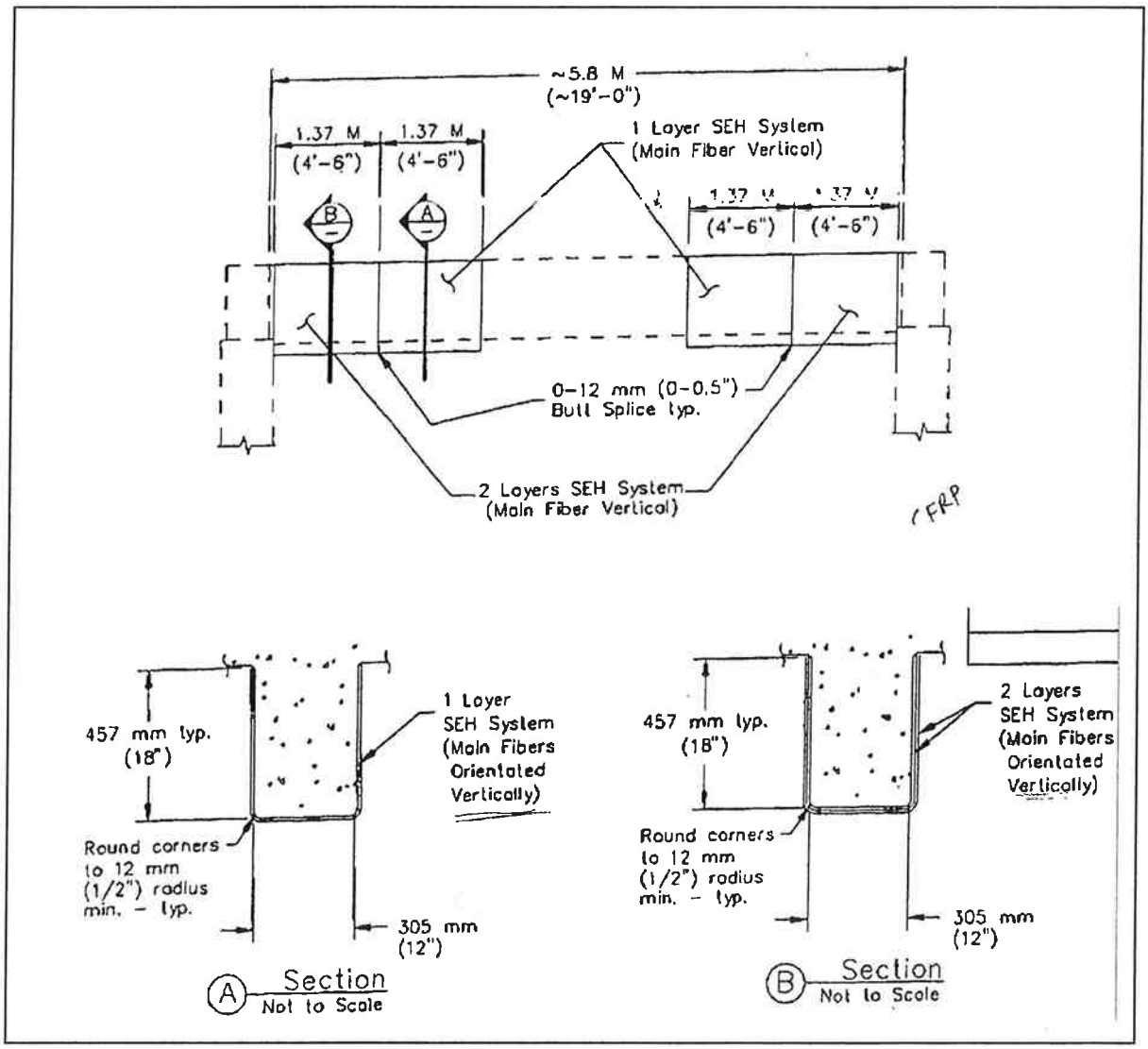

FRP Reinforcement Detail on Longitudinal Beam

APPENDIX B:

CONFIGURATION OF DUMP TRUCKS

FOR STATIC TESTS ON HORSETAIL CREEK BRIDGE

Truck Information

Field Test 1 (License #: 187485)
Dimensions:

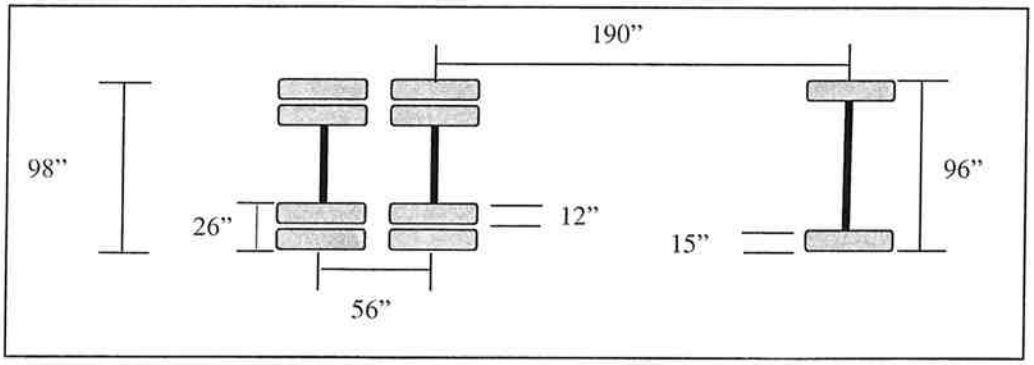

Axle Weights

Position	Empty (lbs.)	Full (lbs)
Front	12800	15600
Center	7500	16900
Back	7000	16600
Center + Back	14500	33500

Field Test 2 (License #: E172688)
Dimensions:

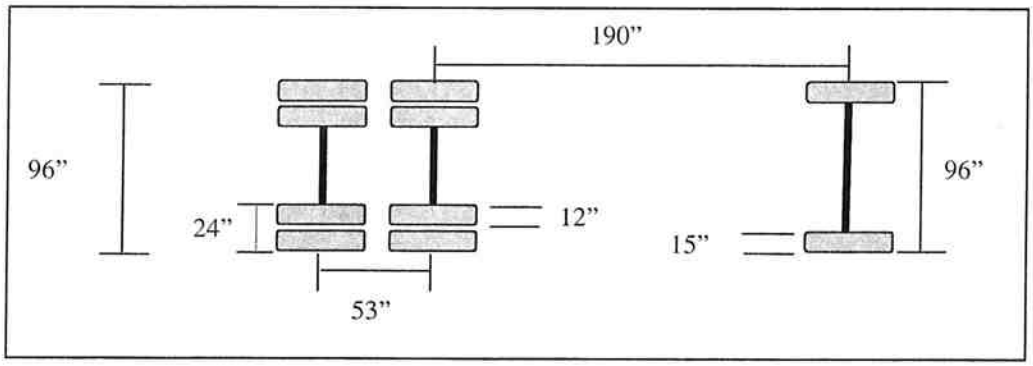

Axle Weights

Position	Empty (lbs.)	Full (lbs)
Front	16200	17700
Center	7300	13000
Back	7100	12600
Center + Back	14400	25600

Tire Contact (empty, **full**)

Nominal tire pressure: Back = 110-120 psi; Front = 120 psi

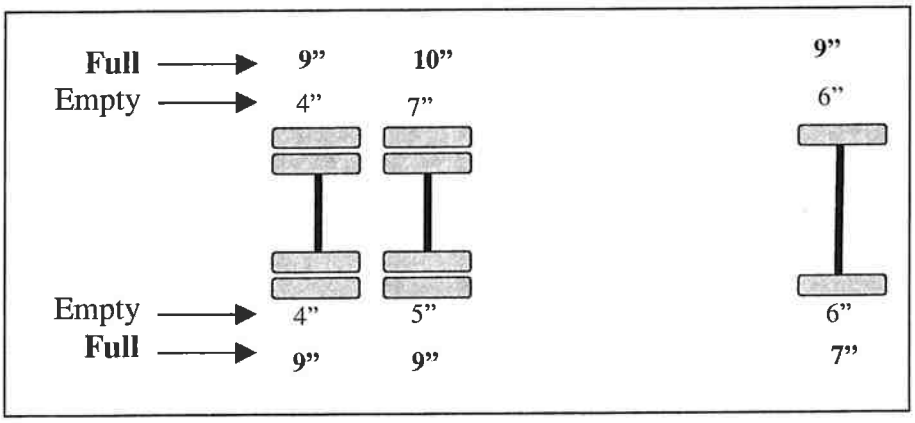

APPENDIX C:

LOCATIONS OF FIBER OPTIC SENSORS

ON THE HORSETAIL CREEK BRIDGE

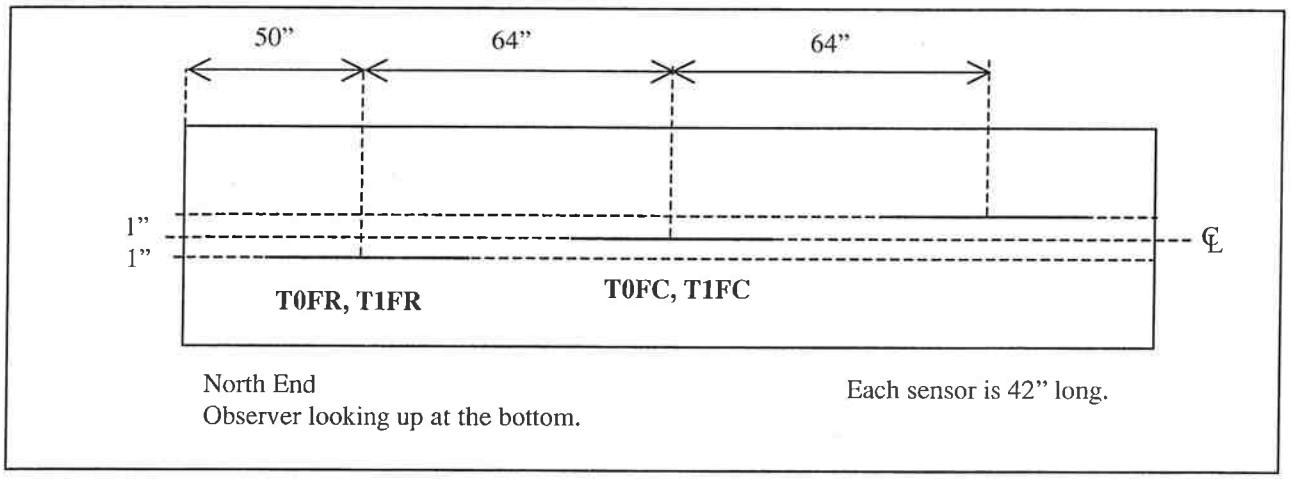

Bottom of the Transverse Beam

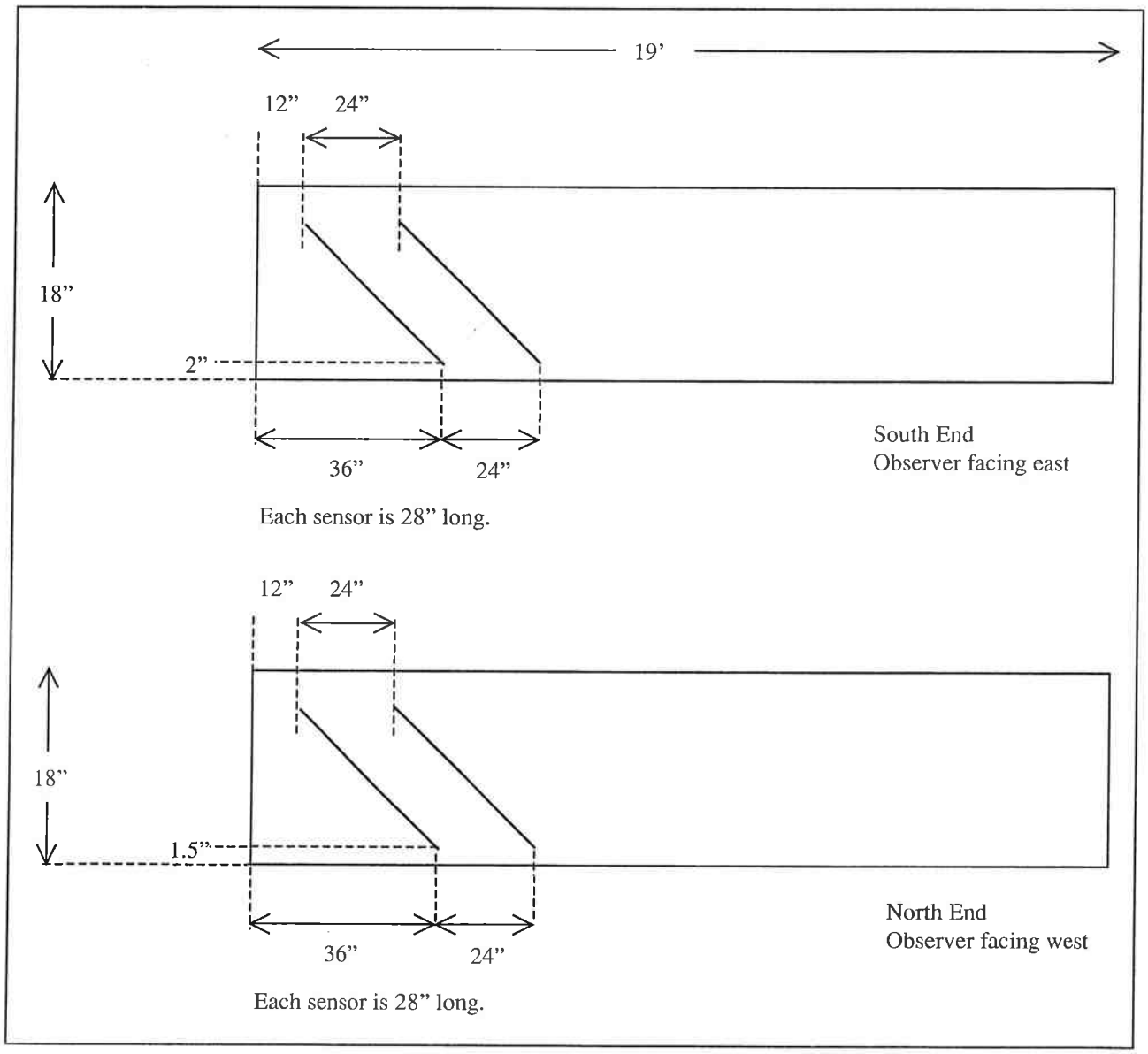

Sides of the Transverse Beam

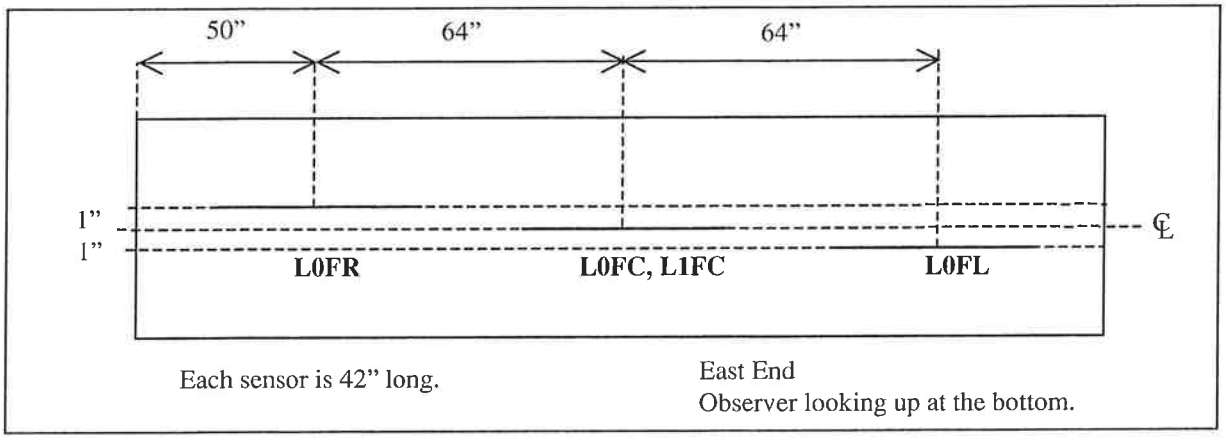

Bottom of the Longitudinal Beam

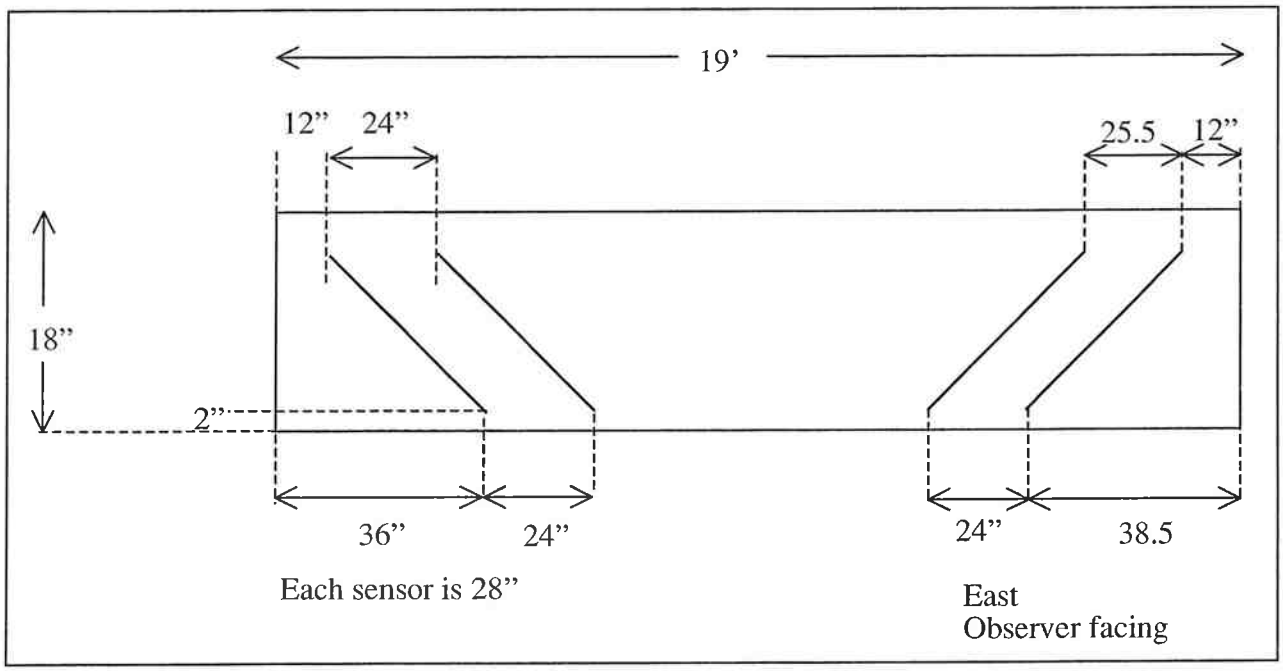

Side of the Longitudinal Beam