Section 14

Deck Construction

14.1	Pour Sequence	1
	Construction Material Storage	7
	Cracking of Bridge Decks	9
	Deck Grades	15
	Deck Pre-Placement Conference	17
	Pouring Deck	23
	Joints	40
	MC Overlay Preparation	88
	MC Overlay	93
	Spray Waterproof Membrane	103
	PPC Overlay	109
	MPCO Overlay	114
	FHWA Video: Bridge Deck Const. Review	117

Pour Sequence

Case Study

- 3 span steel plate girder bridge. Plans call for pouring the 3 spans at the same time.
- Contractor requests to pour span 1 first followed by span 2 two weeks later and span 3 a week after span 2. Closure pours after the other pours are all completed.
- Is this reasonable? What issues would you be concerned with? What do you do?

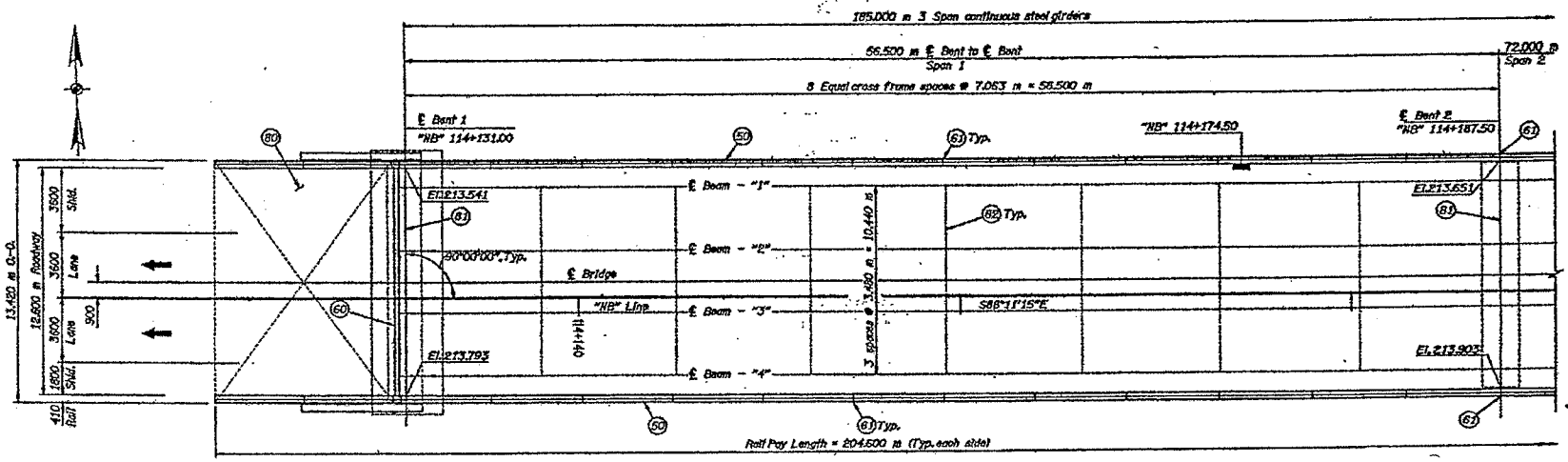

DETAIL REFERENCE NUMBERS

- (20) Type "A" Deck Drain, see Std. Dwg #BR120 for details.
- (50) Modified Concrete Bridge Rail Type "F", see Std. Dwg #BR200 & Dwg #61118 for details.
- (56) Standard Rail Transition, see Std. Dwg #BR203 for details.
- (57) Transition Concrete Bridge Rail to Concrete Rail, see Std. Dwg #61118 for details.
- (60) Deck expansion joint, see Dwg #61110 for details
- (61) Place 6 mm preformed expansion joint filler through parapet where shown, see Std. Dwg #BR200 for details.
- (80) 9.200 m Reinforced Concrete Panel at Bridge Ends, see Std. Dwg #BR165 and Dwg #61118 for details.
- (81) End Cross Frame, see Dwg #61083 for details
- (82) Intermediate Cross Frame, see Dwg #61082 for details.

DECK PLAN - SPAN 1

Scale 1:100

NOTE:
Elevations shown are top of deck.
℄ of bent at gutter line.

See Dwg #61102 for Span 2.

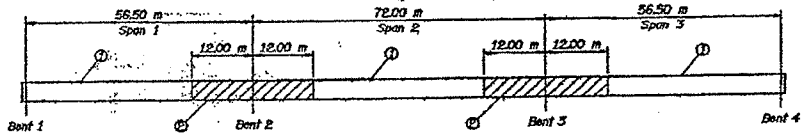

DECK POUR SCHEDULE

Pour deck pours (2) 7 days minimum after adjacent deck pours (1).
Pours shall be poured full deck width.

Note:
All dimensions are in millimeters (mm) and all elevations are meters (m) except as noted.

METRIC

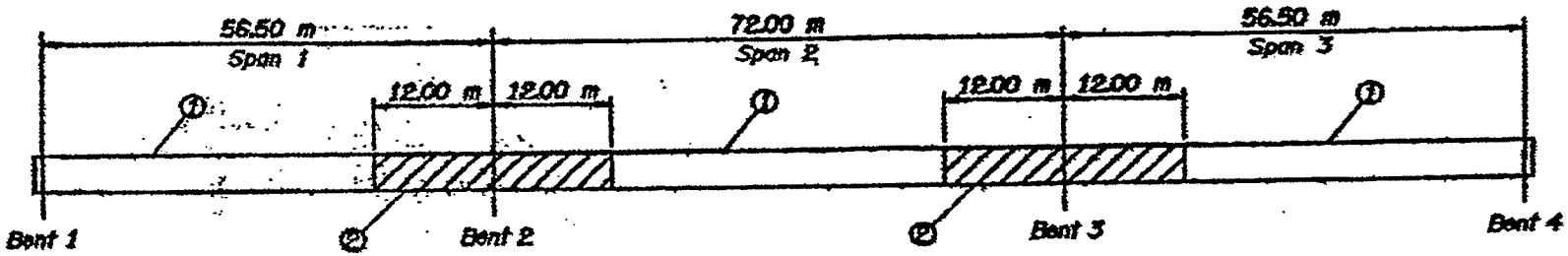

DECK POUR SCHEDULE

Pour deck pours ② 7 days minimum after adjacent deck pours ①.
Pours shall be poured full deck width.

Structure in Question

Deck Cracking

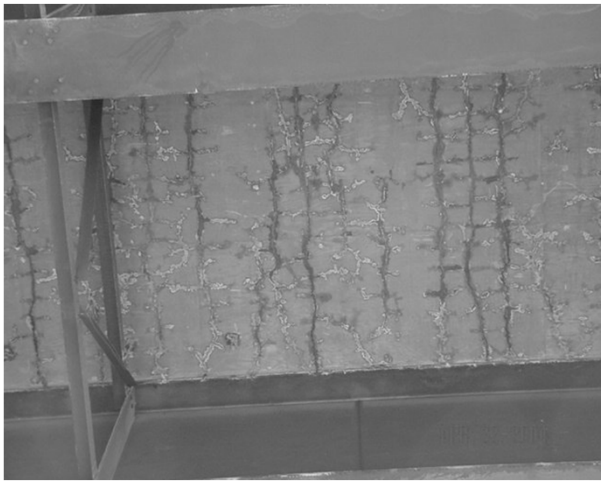

Loose Block

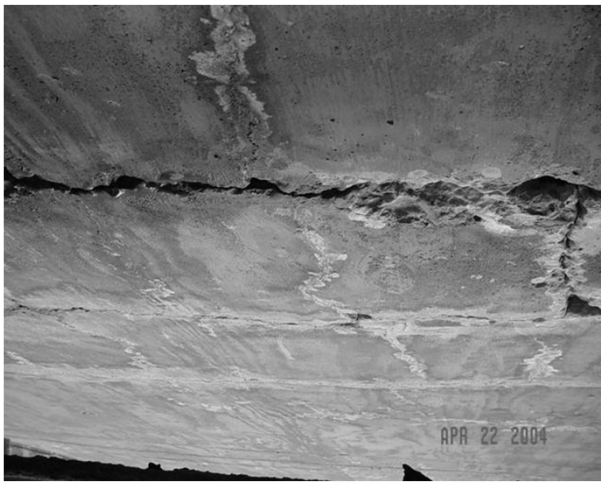

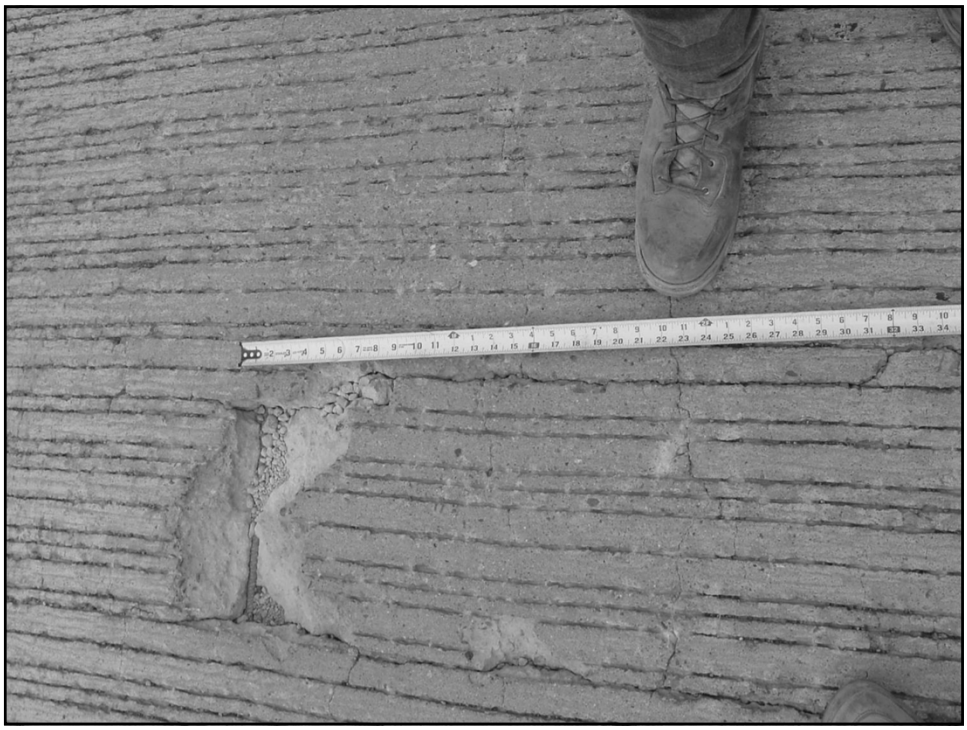

Since span 3 was placed last, how does it look?

Looks Good

Occasional Crack

Pour Sequence

- Follow per plans
- Changes must be approved by the Engineer of Record.
- Improper pour sequence can lead to significant cracking and premature failure of a structure.

Pour Sequence

- It’s not just a deck issue.
- Loads can be built into structural members that they were not designed for.

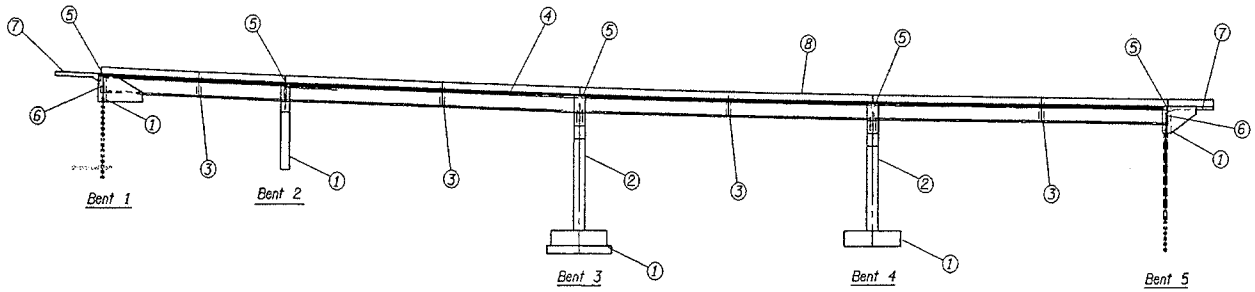

POUR SCHEDULE
No Scale

Pour Schedule Notes

1. Pours ① include footings, wall Bent 2, pile caps and wing walls (Class 25 - 37.5, 25.4 or 19).
2. Pour ② includes columns (Class 25 - 37.5, 25.4 or 19).
3. Place prestressed beams & temporary diaphragms a minimum of 7 days after pours ① & ② are complete and design strength has been reached.
4. Pours ③ include Diaphragm Beams "D1" and "D2" to bottom of deck (Class 30 - 19).
5. Pours ④ include deck pours (Class 30 - 19), no less than 60 days after the transfer of stress in precast, prestressed beams. Stop deck pours short of Beams "C" and "E".
6. Pours ⑤ include Beams "C" and "E" (Class 30 - 19).
7. Pours ⑥ include back walls on pile caps (Class 25 - 37.5, 25.4 or 19).
8. Pours ⑦ include bridge end panels (Class 30 - 37.5, 25.4 or 19).
9. Pours ⑧ include bridge rails (Class 25 - 37.5, 25.4 or 19).

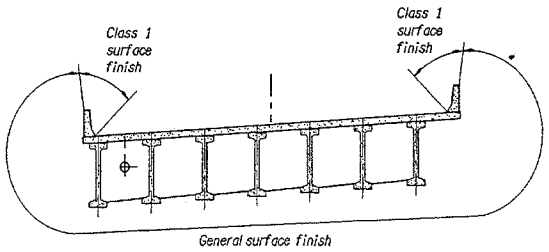

CONCRETE FINISH DETAILS
No Scale

NOTE: All dimensions are in millimeters (mm) except as noted.

METRIC

Δ	DATE	REVISION	BY

DRAFTED: E. Leon
CHECKED: Mark E. Lusby
REVIEWED: In-Tae Lee

DESIGNER
REGISTERED PROFESSIONAL ENGINEER 12252 Kevin F. Davidson OREGON JULY 15, 1997 KEVIN F. DAVIDSON
EXPIRES: 12-31-03

OREGON DEPARTMENT OF TRANSPORTATION
BRIDGE ENGINEERING SECTION

BRIDGE NO. 18804
DATE 22-MAR-2002
CALC. BOOK 5018

MIDDLE FORK JOHN DAY RIVER (RITTER) BRIDGE

POUR SCHEDULE

SHEET 5 OF 25
DRAWING NO. 60799

NE7400bzlj0: \usr\BR\PROJECTS\10471\18804.dgn [VIEW=N2] [PGRID=N2]

Case Study

- Simple span, concrete bulb-I girders resting on pilecaps. Plans call for pouring the “E” beams as a separate pour after the deck pour.
- Contractor pours the “E” beams prior to the deck pour.
- What issues does this raise?

Construction Material Storage

I-35 Bridge in Minneapolis

I-35 Bridge Gusset Plates

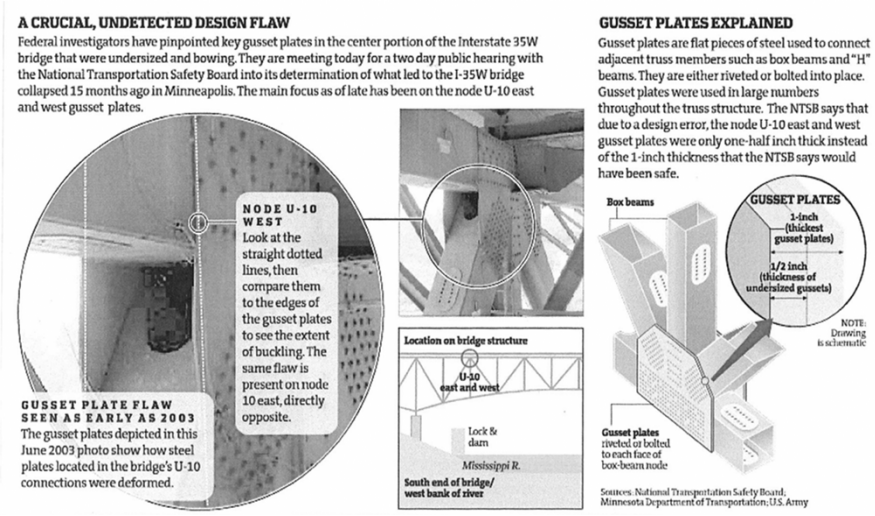

I-35 Material Storage

Milling concrete on bridge

Previously stored material on ramps and approaches

Inspector allowed storage on main span without review by bridge design

Cracking of Bridge Decks

Why does concrete crack?

It cracks when it is stressed beyond its structural capacity.

What causes stress in concrete?

- Shrinkage
- Dead Loads
- Live Loads

Shrinkage Cracks

Shrinkage Cracks Are Caused By:

- Autogenous Deformation
- Plastic Shrinkage
- Thermal Shrinkage
- Drying Shrinkage

Autogenous Deformation

The change in volume taking place of the concrete mixture as the hydration process chemically changes the material and it becomes a solid mass.

Plastic Shrinkage

Results from surface evaporation prior to the cure being put on.

Thermal Shrinkage

- Shrinkage caused by temperature differences
- PADOT Study

  Temperature difference induces 5.5 microstrains per 1 degree F.

  228 microstrains of thermal shrinkage would initiate cracking.

Drying Shrinkage

- Short term (several days)
- Long term (about 1 year).
- It results from the process of the deck drying out.

Concrete Cracks

When total stress in the concrete exceeds the modulus of rupture of the concrete

400+/- microstrains of total stress?

Other Factors Affecting Shrinkage Cracking

- W/C Ratio
- Aggregate Absorption
- Aggregate Size
- Cement Type & Source
- Timely & Proper Cure

Deck Grades

Deck Grade Example

Location	FG	Camber
0.0	100.00	0.00
0.1	100.00	0.05
0.2	100.00	0.09
0.3	100.00	0.13
0.4	100.00	0.15
0.5	100.00	0.17
0.6	100.00	0.15
0.7	100.00	0.13
0.8	100.00	0.09
0.9	100.00	0.05
1.0	100.00	0.00

TOP OF DECK GRADE CALCULATION

Girder Deflections Due to Deck Dead Load

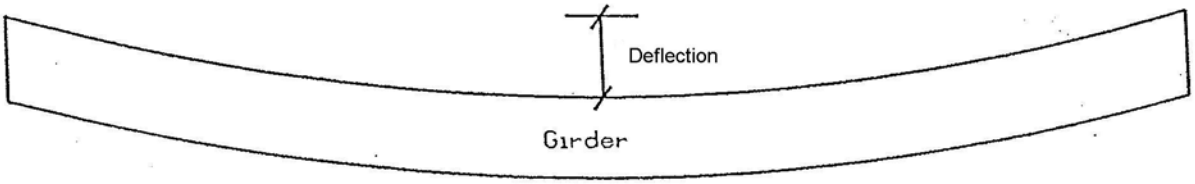

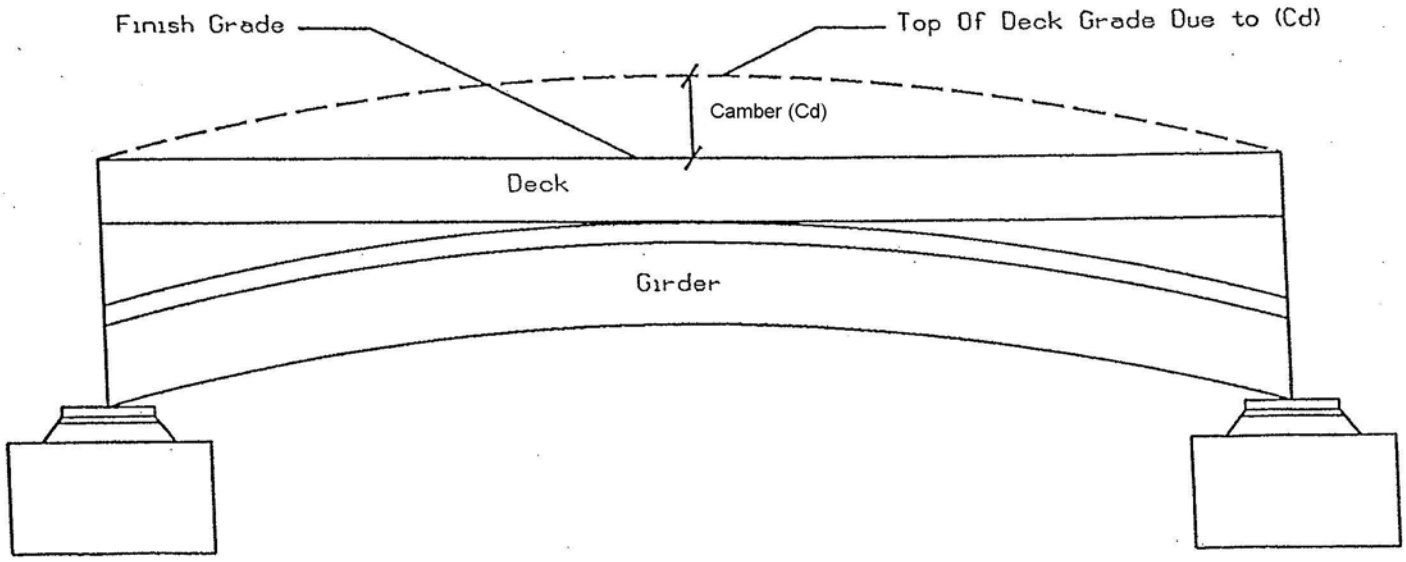

Top Deck Grade = Finish Grade + (Cd) + Crush (If Applicable)

PRECAST PRESTRESSED GIRDERS WITH CIP DECK

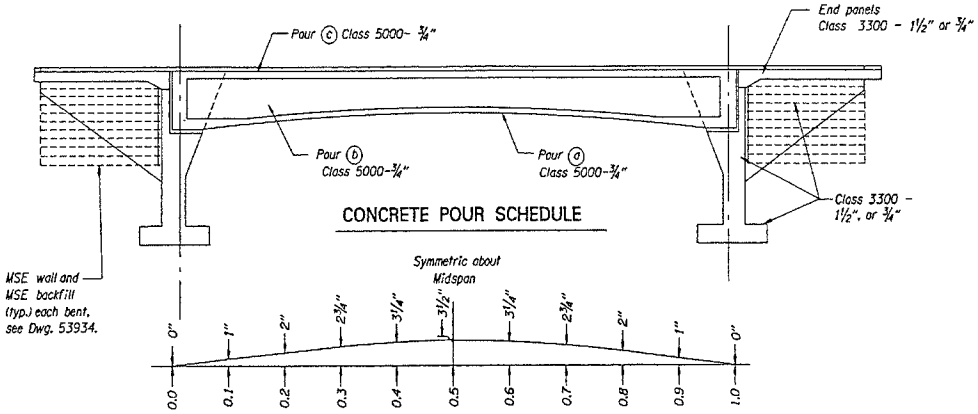

CONCRETE POUR SCHEDULE

CAMBER DIAGRAM

Note:

Camber is designed to compensate for deflection due to prestressing, dead load of all concrete, future wearing surface and long term effects of creep and shrinkage.

no scale

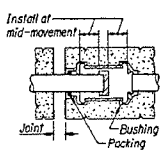

ELECTRICAL CONDUIT EXPANSION JOINT

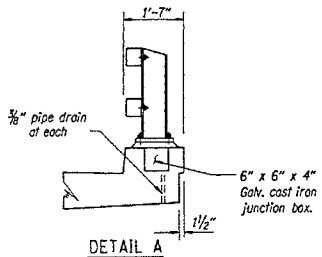

DETAIL A
JUNCTION BOX AT CURB

No scale

CONSTRUCTION NOTES:

Allowance shall be made for a total long term structure shortening (due to effects of prestressing, elastic shortening, creep and shrinkage) The anticipated total shortening at Bent 2 = 1 3/4".

All falsework shall be constructed to permit the superstructure to lift off the falsework and shorten during stressing operations. Other exterior forms shall be free of falsework.

Falsework under the bottom slab of the box girder shall not be removed until after stressing.

Dimensions of concrete sections and the anchorage reinforcement shown on plans shall determine pay quantities. Changes requested by contractor to accommodate a given post-tensioning system shall not be reason for extra payment.
Extend flare of ducts and mild steel reinforcing as shown in stem flare detail.
Additional beam stem flare may be required to maintain minimum clearance.
Concrete for curbs and rails shall be poured after stressing and grouting operations.

Approval by the engineer shall be obtained for any changes.

POUR SCHEDULE

Pour (a) is bottom slab pour.

Pours (b) include logitudinal and transverse beams to the bottom of top fillets and shall be delayed a minimum of 5 days after bottom slab is poured.

Provide roughened surface at each construction joint as shown.

Pours (a) and (b) may be any length so long as they end at a falsework bent.

Pours (c) include top fillets and deck. Pour (c) is to be delayed a minimum of 3 days after completion of Pour (b).

Pour (c) shall be full length of the span.

Bulkheads for pour (c) shall not be removed until at least 3 days after pour completion.

Note: All formwork of box cells shall be removed prior to stressing operations.

CONSTRUCTION SEQUENCE

1. *Construct bents (including wingwalls) up to the level of bearing seats.*
2. *Construct MSE walls up the the level of bearing seats.*
3. *Construct box girder.*
4. *Post-tension box girder.*
5. *Grout post-tensioning ducts, pour post-tensioning anchorage encasement, and remove falsework.*
6. *Construct backwalls*
7. *Construct remainder of MSE walls.*
8. *Place loose granular drain backfill material behind abutments and wingwalls.*
9. *Construct end panels, curbs and rails.*
11. *Place joints at bents 1 and 2.*

Note:

Changes to the construction sequence require review and approval by the Engineer.

△	DATE	REVISION	BY

DRAFTED: Philip G. Amaya
CHECKED: Bill Bennett
REVIEWED: Lwin Hwee

DESIGNER
REGISTERED PROFESSIONAL ENGINEER — LWIN HWEE — OREGON — JULY 29, 1986
EXPIRES: 12-31-98

OREGON DEPARTMENT OF TRANSPORTATION
BRIDGE ENGINEERING SECTION

BRIDGE NO. 17332
DATE 23-DEC-1996
CALC. BOOK 4510

COLORADO AVE. & BNRR O'XING

POUR SCHEDULE AND CONSTRUCTION SEQUENCE

SHEET 7 OF 25
DRAWING NO. 53922

CAD DGN: /usr/br/olson/projects/08783/p17332b.dgn [VIEW=11] [PGRID=11] 23-DEC-1996

GIRDER SCHEDULE

Girder Type	Girder Number	Number Required	LT. = Lt. Exterior RT. = Rt. Exterior	Span Number	Span Length ctr. - ctr. Bearings along Girder ℄	"A", 0-0 Girder (Horiz. length after shortening)	Girder Wt., Kips	Concrete Strength @ 28 Days, KSI	Concrete Strength @ Releases, KSI	Initial Tension per Strand, Kips	Number of Strands per Girder, "N"	Deflected Strands per girder, "Ds"	Figure Number for Strand Pattern	Reinforcing Bars: Stirrup spaces "a"	Reinforcing Bars: Stirrup spaces "b"	Reinforcing Bars: (Stirrup leg) "m"	Diaphragm: Negative Value Indicates back from midspan "D_L"	Diaphragm: Negative Value Indicates back from midspan "D_R"	Back End (On Stationing): End Block	Back End: Negative Value Indicates Point beyond Girder End "F_L"	Back End: "E_L"	Back End: "E_R"	Back End: "F_R"	Ahead End (On Stationing): End Block	Ahead End: Negative Value Indicates Point beyond Girder End "F_L"	Ahead End: "E_L"	Ahead End: "E_R"	Ahead End: "F_R"	Estimated Midspan Deflection: Upward at Release	Estimated Midspan Deflection: Upward 3 months after Release	Estimated Midspan Deflection: Down Due to Deck Dead Load	Estimated Midspan Deflection: Down Due to Non-Comp. Dead Load
MBT72	A1	1	LT.	1	143'-1 1/4"	144'-6 1/4"	123.2	9.0	6.6	43.9	42	24	1	20	20	79.25"	-	-44 1/2"	N	37"	13"	4"	-12"	N	-12"	4"	13"	38"	3"	5 7/8"	2 1/4"	1/8"
MBT72	B1	1	-	1	143'-10 1/8"	145'-3 1/8"	123.9	9.0	6.5	43.9	42	24	1	20	20	79.25"	44 1/2"	-44 1/2"	N	37"	13"	4"	-12"	N	-12"	4"	13"	38"	3 1/8"	5 7/8"	2 1/4"	1/8"
MBT72	C1	1	-	1	144'-6 7/8"	145'-11 7/8"	124.5	9.0	6.5	43.9	42	24	1	20	20	79.25"	45"	-44 1/2"	N	37"	13"	4"	-12"	N	-12"	4"	13"	38"	3 1/8"	5 7/8"	2 1/4"	1/8"
MBT72	D1	1	-	1	145'-3 3/4"	146'-8 3/4"	125.1	9.0	6.5	43.9	42	24	1	20	20	79.25"	45"	-45"	N	37"	13"	4"	-12"	N	-12"	4"	13"	38"	3 1/8"	5 7/8"	2 1/4"	1/8"
MBT72	E1	1	-	1	146'-0 5/8"	147'-5 5/8"	125.8	9.0	7.0	43.9	44	24	2	20	20	79.25"	45"	-45"	N	37"	13"	4"	-12"	N	-12"	4"	13"	38"	3 1/4"	5 3/4"	2 1/2"	1/8"
MBT72	F1	1	-	1	146'-9 5/8"	148'-2 5/8"	126.4	9.0	7.0	43.9	44	24	2	20	20	79.25"	45 1/2"	-45"	N	37"	13"	4"	-12"	N	-12"	4"	13"	38"	3 1/4"	5 3/4"	2 1/2"	1/8"
MBT72	G1	1	-	1	147'-6 1/2"	148'-11 1/2"	127.0	9.0	7.0	43.9	44	24	2	20	20	79.25"	45 1/2"	-45 1/2"	N	37"	13"	4"	-12"	N	-12"	4"	13"	38"	3 1/4"	5 3/4"	2 1/2"	1/8"
MBT72	H1	1	-	1	148'-3 1/2"	149'-8 1/2"	127.7	9.0	7.0	43.9	44	24	2	20	20	79.25"	45 1/2"	-45 1/2"	N	37"	13"	4"	-12"	N	-12"	4"	13"	38"	3 1/4"	5 3/4"	2 1/2"	1/8"
MBT72	I1	1	-	1	149'-0 5/8"	150'-5 5/8"	128.3	9.0	7.0	43.9	46*	26	3	20	20	79.25"	45 1/2"	-45 1/2"	N	37"	13"	4"	-12"	N	-12"	4"	13"	38"	3"	6"**	2 3/4"	1/8"
MBT72	J1	1	-	1	149'-9 7/8"	151'-2 7/8"	128.9	9.0	7.0	43.9	46*	26	3	20	20	79.25"	46"	-46"	N	37"	13"	4"	-12"	N	-12"	4"	13"	38"	3"	6"**	2 3/4"	1/8"
MBT72	K1	1	-	1	150'-6 3/4"	151'-11 3/4"	129.6	9.0	7.0	43.9	46*	26	3	20	20	79.25"	46"	-46"	N	37"	13"	4"	-12"	N	-12"	4"	13"	38"	3"	6"**	2 3/4"	1/8"
MBT72	L1	1	-	1	151'-3 7/8"	152'-8 7/8"	130.2	9.0	7.0	43.9	46*	26	3	20	20	79.25"	46"	-46"	N	37"	13"	4"	-12"	N	-12"	4"	13"	38"	3"	6"**	2 3/4"	1/8"
MBT72	M1	1	RT.	1	152'-1"	153'-6"	130.9	9.0	7.2	43.9	48*	28	4	20	20	79.25"	46"	-	N	37"	13"	4"	-12"	N	-12"	4"	13"	38"	3 1/8"	6 1/8"**	2 3/4"	1/8"

* Temporary top strands are to be cut once girders are erected in the field.
**Temporary top strands have been cut.

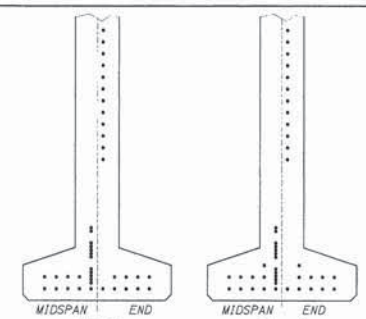

Figure 1

"N"	42
"Ds"	24
"Yc"	5.44
"hc"	3"

	Back	Ahead
"Ye"	21.24	21.24
"he"	24"	24"

Figure 2

"N"	44
"Ds"	24
"Yc"	5.46
"hc"	3"

	Back	Ahead
"Ye"	20.54	20.54
"he"	24"	24"

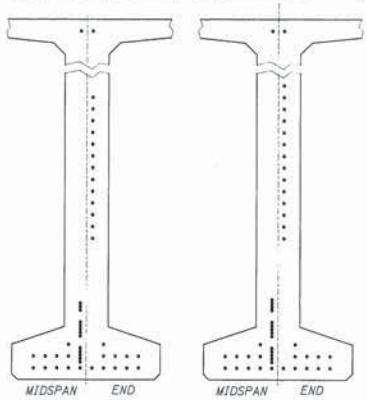

*Figure 3

"N"	46
"Ds"	26
"Yc"	5.79
"hc"	3"

	Back	Ahead
"Ye"	21.74	21.74
"he"	24"	24"

*Figure 4

"N"	48
"Ds"	28
"Yc"	6.12
"hc"	3"

	Back	Ahead
"Ye"	22.92	22.92
"he"	24"	24"

*Numbers in Figure do not include temporary top strand.

BULB-T GIRDER NOTES:

Girders designed for live loading and superimposed dead load as shown in the General Notes.
Provide reinforcing steel as shown in the General Notes except as noted.
Provide welded wire fabric conforming to ASTM A497.
Provide 0.6" dia. 7-wire low relaxation prestressing strands conforming to AASHTO M203 (ASTM A416), Grade 270, Supplement 1. Provide an initial tensioning (after harping deflected strands) of 43.9 kips per strand unless shown otherwise on Girder Schedule.
Provide the class of concrete shown on Girder Schedule.
Keep girders in an upright position w/the support points within 2'-0" of the girder ends.
Provide temporary diaphragm beams as required, see dwg. BR350.

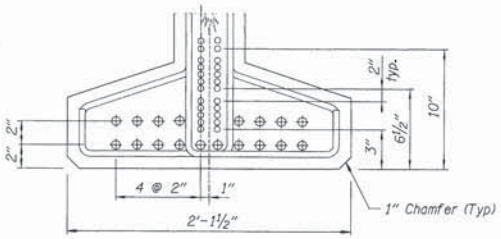

BULB DETAIL
(Figures 1 and 2)

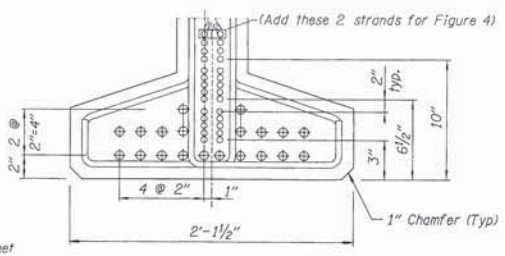

BULB DETAIL
(Figure 3)

(Alternate A)
One cable restraint at location shown. After restraint is removed, fill hole with concrete and finish flush with surface of beam - exterior girders only.

(Alternate B)
Cable restraints top and bottom at each Beam D.

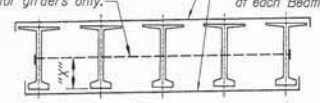

GIRDER RESTRAINT DIAGRAM
Not to Scale

Snug fit prestressed giders against forms prior to diaphragm pour. Keep restraints in place a minimum of two days after completion of diaphragm pour.

When the girder build-up exceeds 3" and/or the girder stirrups extend less than 2" into the deck, add #4 stirrup extensions. Place stirrup extensions at each girder stirrups and tie to the girder stirrup. Where girder stirrup spacing is 6" or less, place stirrup extentions @ 12" max.

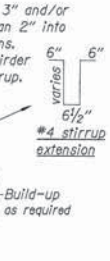

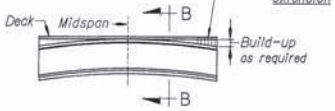

Ensure girder soffits are on level grade prior to prestressing. Use build-up over girders to compensate for the difference between deck elevation and girder camber.

BUILD - UP DECK DETAIL
Not to Scale

Minimum deck thickness. This dimension assumes girder fabrication and erection will meet the required deck elevations. In case of variations, lower girder to meet corrected elevation.

SECTION B-B
Not to Scale

DATE	REVISION	BY

ACCOMPANIED BY DWGS. See sheet 1 for this structure.

DRAFTER: E. Leon
DESIGNER: Zachary T. Beget
CHECKER: Paul J. Strauser
REVIEWER: Robert E. Grubbs

REGISTERED PROFESSIONAL ENGINEER 74319PE OREGON JANUARY 09, 2015 ZACHARY T. BEGET
RENEWAL DATE: 12-31-2015

OREGON DEPARTMENT OF TRANSPORTATION
REGION 4 BRIDGE ENGINEERING
63034 O.B. Riley Road
BEND, OR 97701
(541) 388-6032

STRUCTURE NO. 21610
DATE JULY - 2015
CALC. BOOK 6730

HWY 004 OVER BNSF AT MP Z165.62
US97 @ WICKIUP JCT. (LA PINE) SEC
THE DALLES-CALIFORNIA HIGHWAY MP Z165.62
DESCHUTES COUNTY

MBT72 MODIFIED BULB-T GIRDER SCHEDULE (Span 1)

SHEET 10 OF 32
DRAWING NO. 95496

Deck Grade Example Key

Location	FG		Camber		DG
0.0	100.00	+	0.00	=	100.00
0.1	100.00	+	0.05	=	100.05
0.2	100.00	+	0.09	=	100.09
0.3	100.00	+	0.13	=	100.13
0.4	100.00	+	0.15	=	100.15
0.5	100.00	+	0.17	=	100.17
0.6	100.00	+	0.15	=	100.15
0.7	100.00	+	0.13	=	100.13
0.8	100.00	+	0.09	=	100.09
0.9	100.00	+	0.05	=	100.05
1.0	100.00	+	0.00	=	100.00

Excess Camber?

Deck Pre-Placement Conferences

Deck Pre-Placement Conferences 00540.02

A pre-pour conference should be held 3 weeks ahead of placing concrete. This conference is to discuss all phases of the deck pour and the responsibilities of all parties involved.

Any problems that arise should then be resolved well ahead of the day of concrete placement.

Contract No.

Deck Placement Conference Outline

(00540.02(a)(b))

Print Form

Project Name (Section) | Contract No.

Highway | County | Date

Contractor | Estimated Date | Estimated Quantity/Day | Project Manager

Mix Design

Approved? ☐ Yes ☐ No

Mix Design No.

List types of admixtures to be used (Superset extender required to extend initial set by 90 min. 02001.30(e). Extra for travel, time or struct. type.)

Slump Range _____ W/C _____ Air Content _____

Concrete Mix

Supplier Name

☐ Supplier notified well in advance.

☐ Supplier aware of specification on truck mixer equipment. 02001.40, ASTM C94

☐ Communication between batch plant and project. How? Who? _____

☐ Continuous delivery assured for cubic yards needed per hour, at what intervals? _____

☐ Supplier has sufficient material on-hand for quantity required.

☐ Mix temperature of 50°F minimum and 80°F maximum when air temperature is 40°F or higher. Mix temperature of 60°F minimum and 80°F maximum when air temperature is or forecast to be below 40°F during cure period.

Contractor Quality Control

CCT Name | Certification No.

QCT Name | Certification No.

Individual authorized for acceptance and rejection of materials

Weather Conditions

☐ Precipitation forecast less than 30% during placement window (2 hours before to 2 hours after). 00540.49(b)

☐ Surface evaporation rate of less than 0.10 psf per hour. Fig. 00540-1

☐ Cold weather plan approved if temperature is or forecast to be below 40°F. 00540.49(1-2-a) ☐ Yes ☐ No ☐ N/A

☐ No frost or ice on forms or rebar.

Contract No. _____

Deck Finishing Machine

☐ Type 00540.24 _____
Brand Name

☐ Approved working drawings showing location of deck machine rails 00540.24(a).

☐ Deck machine to set up and run over full length of area of placement 00540.24(g).

☐ Experienced operator with good knowledge of machine operation. _____
Operator Name

☐ Changes in crown or super? _____

How will changes be handled?

☐ Dry run rebar clearance is +/- ¼" from clearance shown. 00540.48(g)

Method of checking rebar clearance:

Forms

☐ Top mat, tie bar at every intersection if spacing is more than 6", otherwise every other intersection. 00530.41(b)

☐ Bottom mat, tie every other intersection.

☐ At least 3 ties per lap splice.

☐ Monitor falsework, tattletales installed (when needed).

☐ All forming and bulkhead in place prior to start of placement.

☐ Stay-in-place forms are not allowed for bulkheads.

☐ Apply form release to forms.

☐ Cleanliness of bottom and rebar.
How? _____ When? _____

☐ Edge of forms set to line and grade.
How? _____ When? _____

☐ Supports for outside edge.

Deck Placement

☐ Saturate the tops of precast beam and formwork 2 hours immediately prior to beginning deck placement.

☐ Minimum rate of placement 20 ft/hr 00540.48(g) third bullet.

☐ Calculated cubic yards to be placed _____

Method of Placement _____ Backup Method _____ Estimated time to place mix _____

Contract No. _____

Deck Placement (continued)

☐ Vibrators 00540.48(c)

Experienced vibrator person _____
Operator Name

Size of vibrators to be used _____ ☐ Meet requirements of 00540.23

Number of vibrators to be used (minimum 2) _____

Discuss methods of consolidation 00540.48(c)

Power Source: ☐ Generators ☐ Direct Power ☐ Backup _____
Type

☐ Placement direction 00540.48(g)

☐ Transverse work bridge (2 minimum)

☐ Emergency bulkheads, how will this be addressed if needed?

☐ 12-foot straightedge is on-site prior to start of pour. Check gutters, lane lines, ends of pours and "as directed". 00540.55

Environmental

☐ Where will concrete trucks clean out? _____ _____
Containment?

☐ Where will deck machine clean out? _____ _____
Containment?

☐ Steps to assure containment of in forms? _____

Curing Concrete

☐ Provide pressure washers with fog nozzles.

☐ Provide wind breaks for spray or other approved methods to prevent premature drying during placement operations.

☐ Presoaked wet burlap or dry non-woven polypropene fabric with 4-mil polyethylene film. Color as weather dictates.

☐ Additional soaking to keep the deck moist at all times during the cure period.

☐ Water availability during and after placement

_____
Where?

_____
How?

_____
If above information is not available, who will advise the PM prior to start of placement?

During non-working days, who will be able to add water for cure?

_____ _____
Name Phone No.

☐ Bridge deck cure time is 14 calendar days.

Contract No.

General Information

Check special provisions for additional information.

- ☐ **Construction joint surfaces:** Use surface retarder to aid in laitance removal. 00540.43 (a)
- ☐ **Closure pour prep:** Sawcut top 1" of deck, may be waived if joint is straight without spalls.
  Hand rub or brush fresh concrete paste onto the existing surface of vertical joints down to the top mat.
- ☐ **Deck roadway texturing:** Cut grooves no sooner than 14 days after deck is cast. 00540.50
- ☐ **Striping forms:** 80% of specified strength and 7 days. Table 00540-1
  Early removal of forms does not eliminate the curing requirement of 00540.51

Deck Pre-Placement Conferences Cont'd

A second pre-pour conference should be held at the job site one-half hour before the placement begins to discuss placement duties and procedures with the contractor's entire placement crew and the Engineer.

Preparations for Concrete

Before the contractor orders any concrete for delivery and placement at the site, you should:

- Insure that an approved mix design is on file with the Material Section.

Preparations for Concrete Cont'd

Make sure the contractor has adequate resources for the pour:

- A steady supply of mix.
- Adequate labor and equipment.
- Back-up equipment at the jobsite.

Screed Rails

- Place outside the finished area.
- Rail supports are at about every 3 feet
- Ensure all rail supports are checked. If every other support is shot in then stringline in between.

Screed Rails Cont'd

- Removable to at least 2 inches below surface, if within deck limits.
- The rail and supports extend far enough beyond the end of the deck to provide all equipment with full access to the deck.

Detour so close, machine rails set on beam

What is so bad about machine rails in the deck?

Possible Voids from Footprints

Deck Finish Machine (00540.24)

- Capable of finishing the entire surface.
- Self-propelled with positive control in both forward and reverse directions.
- Capable of raising rolls or screed to clear the screeded surface.
- Equipped with augers.

Deck Finish Machine Cont'd

- Equipped with rollers or a vibrating screed.
- Run on the skew of the bridge.

Deck Machine Dry Run

- Run machine over the entire deck to ensure proper deck thickness and clearances prior to the deck pour.
- Past the end bulkheads to ensure all areas have been checked.
- Do not allow adjustments in machine crown or leg heights after clearances checked and approved.
- Note: The drum will usually float up about 1/8 inch on the concrete mix.

Pouring Deck

Typical Deck Machine

Typical Deck Machine

- Like to see small ball of mix in front of screed roll
- Keep mix about halfway up auger

Texas Screed Type Equipment for Narrow Pours

Prevent Splatter

Length of vibration

Void at chair

Poor Vibration

Poor Vibration

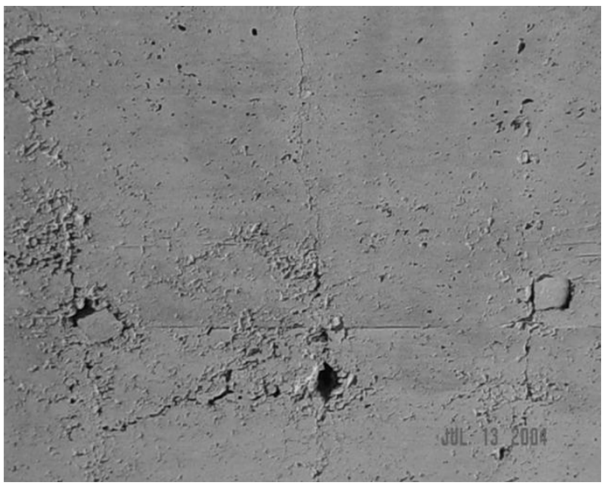

Unconsolidated Concrete in Sidewalk Area

Footprints in Sidewalk Area?

Part of Deck Poured at Wrong Grade

Deck Removal Damaged Bulb-T

Pan Decking on Temporary Structure

Form Collapse During Deck Pour

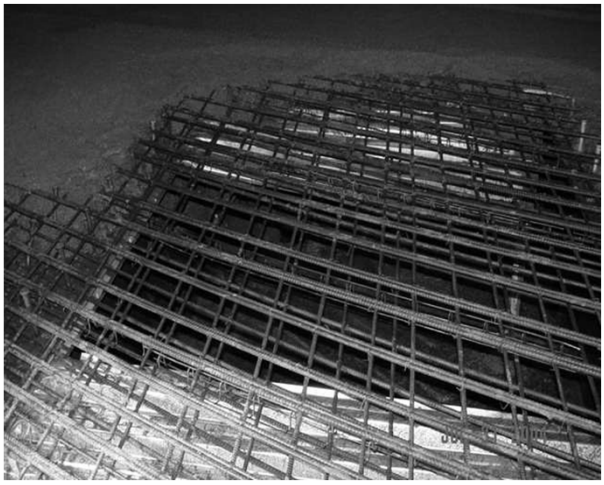

Float Finishing

- Floats at least 4 feet wide.
- Used in overlapping passes.

Straightedge Checks

- With 12 foot straightedge.
- Both parallel and perpendicular to roadway centerline.
  - At lane lines
  - At bridge ends
  - In gutters

Straightedge Checks Cont'd

- Must be within 1/8 inch per 12 feet.
- In timely manner to allow for contractor to correct deficiencies while the mix is still workable.

Depth Checking

Handwork

Some hand-finishing is needed in areas that cannot be reached by the mechanical screeding equipment.

These are the areas where you will tend to see problems.

Standing Water on Both Sides of Inlet

End Dropoff?

What happened to the rail stirrups?

Deck Roadway Texturing

- Saw cut after cure is complete.
- 1/8″ – 3/16″ deep
- Randomly spaced
- 16″ Smooth @ Gutters

Deck Roadway Texturing Cont'd

- Transverse to centerline
- Avoid overlaps
- 6″ From joints

Edge of Deck Treatment

Edge of Deck Treatment (1 ¼")

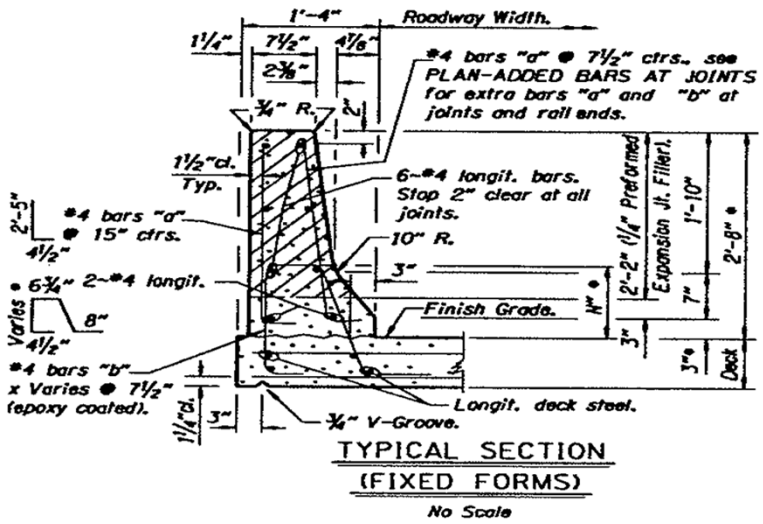

TYPICAL SECTION
(FIXED FORMS)
No Scale

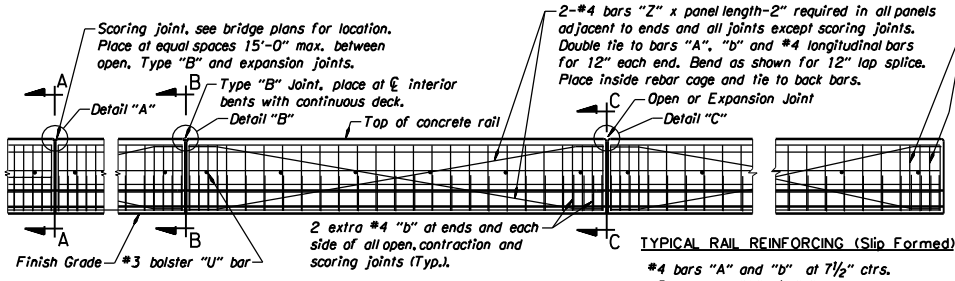

ELEVATION~CONCRETE BRIDGE RAIL (Slip Formed)

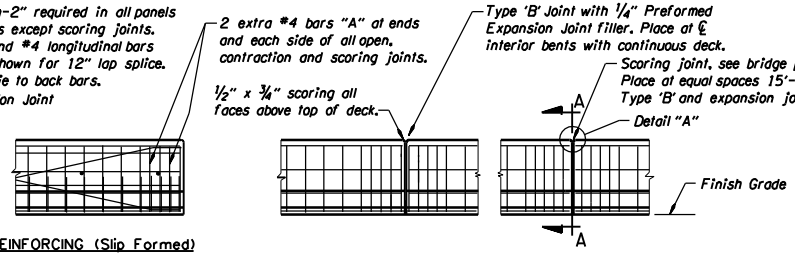

ELEVATION~CONCRETE BRIDGE RAIL (Fixed Forms)

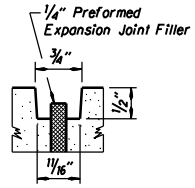

TYPE 'B' JOINT SCORING DETAIL

TYPICAL RAIL REINFORCING (Slip Formed)

*#4 bars "A" and "b" at 7 1/2" ctrs.
Place extra "A" & "b" bars as noted.
7-#4 bars "C", stop 2" clear at ends and all joints.
**2-#4 bars "C" (bottom 2 bars)
**2-#4 Bar "E"
See Elevation for "Z" bars.

1 **continuous thru scoring joints, stop 2" clear at ends, open joints and Type "B" joints.

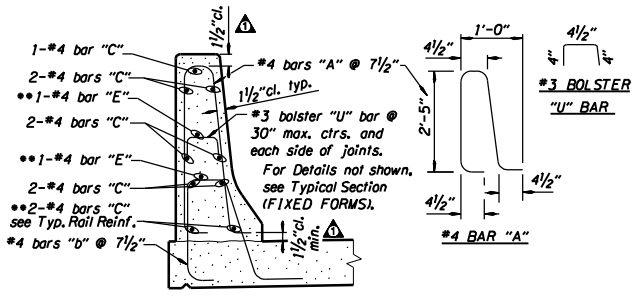

TYPICAL SECTION (Slip Formed)

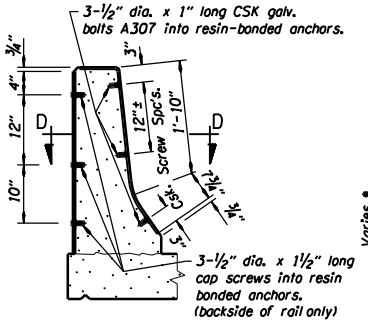

NOTE:
Details shown are general details only and should be modified as needed to fit specific project requirements.

EXPANSION JOINT COVER PLATE
(When Required by Bridge Plans)

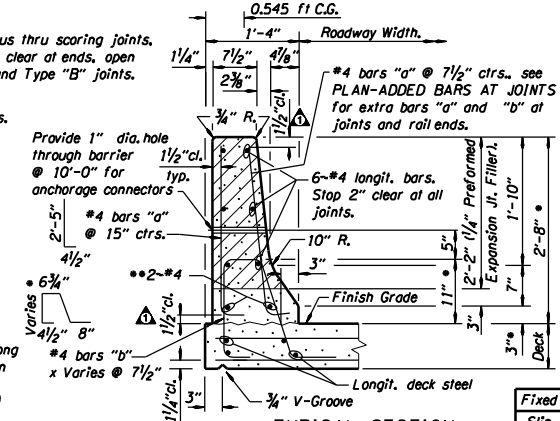

2 NOTE:
See BR203 for rail on end panel.

TYPICAL SECTION (FIXED FORMS)

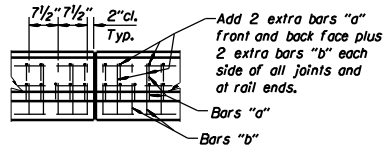

PLAN~ADDED BARS AT JOINTS

NOTE:
*Top of parapet shall be 2'-8" above finish grade. Increase dimensions marked thus (*) by depth of A.C.W.S.

ESTIMATED QUANTITIES

		2'-8" Ht.	1" added Ht.
	Concrete	2.23 ft.³/ft.	0.11 ft.³/ft.
Fixed Forms	Bars "a" & longit.	10.81 #/ft.	——
Slip Forms	Bars "A, C & E"	14.83 #/ft.	——
	Rail Weight	335 #/ft.	15 #/ft.

Bar weight assume joints at 15'-0" ctrs.

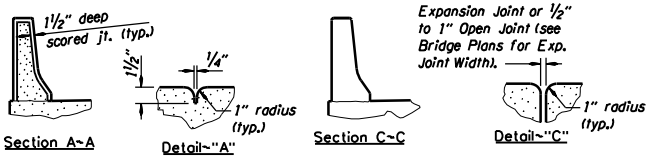

SCORING JOINT DETAILS
SLIP-FORMED OR FIXED FORMS

OPEN OR EXPANSION JOINT DETAILS

Design Capacities
Rw= 59.5 kips
Lc= 4.123 ft.
Mc= 13.2 K-ft./ft.
Center of gravity = 0.545 ft.

GENERAL NOTES:
Provide reinforcing steel conforming to ASTM A706 or AASHTO M31 (ASTM A615) Grade 60.
Provide concrete Class 3300 - 1 1/2" or 3/4".
Provide steel cover plates conforming to AASHTO M183. (ASTM A36). Hot dip galvanize after fabrication.
At skewed bents make joints parallel to the center line of the bent unless shown otherwise on the detail plans.

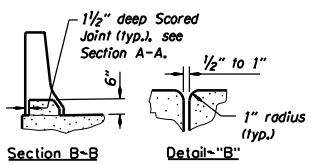

TYPE "B" JOINT DETAILS
(SLIP-FORMED)

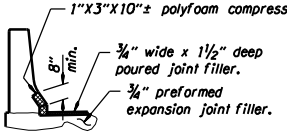

Use when water drains towards rail and no deck joint seal is used.

DETAIL "D"

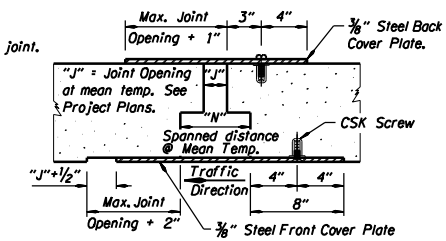

SECTION D-D

CALC. BOOK NO.	BASELINE REPORT DATE 01-JUL-2009
The selection and use of this Standard Drawing, while designed in accordance with generally accepted engineering principles and practices, is the sole responsibility of the user and should not be used without consulting a Registered Professional Engineer.	NOTE: All material and workmanship shall be in accordance with the current Oregon Standard Specifications

OREGON STANDARD DRAWINGS

CONCRETE
BRIDGE RAIL
TYPE "F"

2008

	DATE	REVISION DESCRIPTION
1	07-08	Added 1 1/2" cl. and ** note
2	07-10	Added note

br200.dgn 05-10

BR200

Effective Date: December 01, 2010 - May 31, 2011

1:24 - BR200

Rail Flush with Deck?

Rail / Deck Transition

Rail Overhangs Deck?

Checking Edge of Deck Location on Curve

Drips on Edge of Deck

Joints

Construction Joint

- Only at planned/approved locations.
- Surface retarder required (00540.43)
- “Roughened-surface” or “shear-key” type per plans.
- Pre-wet for next pour.

Roughened Surface

Surface retarder required 00540.43

Shear Key in 30″ Deep Deck

Shear Key in 30″ Deep Deck

Construction Joints Cont'd

- Use extra care to vibrate adequately against the existing surface. Increase the number of insertion points.
- If bonding agent is used, it must not be dry when the concrete is placed or it will do the opposite and create a bond breaker.

Open gaps at closure pour?

Voids Behind Stay-in-Place Form

Stay-in-place joint forms are not allowed in bridge deck construction joints. 00540.43(a)

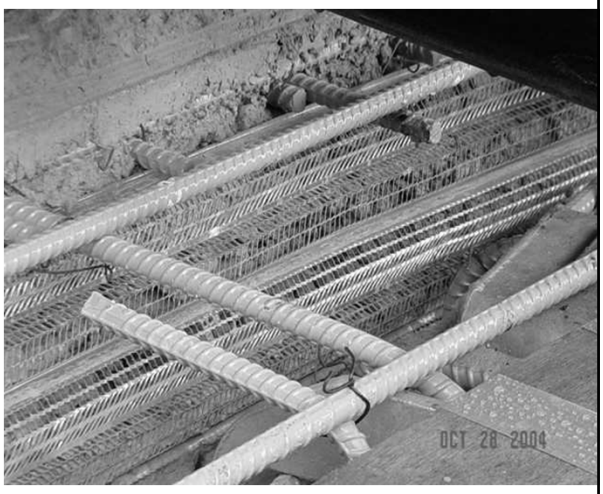

Voids

Voids Behind Stay-in-Place Form

Transverse Joint with Stay-in-Place Form Material?

Shear Key Blockout

Shear Key

Expansion Joints

Protect Edges

Joint Edges?

Joint Wanders

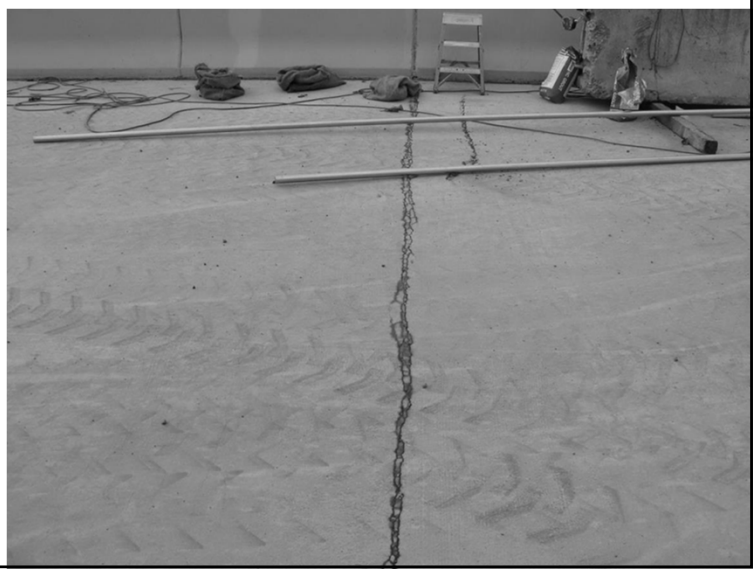

Repaired Joint Edge

Repaired with Kwikbond Polymer PPC Easy Patch Fine Mix

Repaired Joint Edge

Repaired with Propoxy 2500

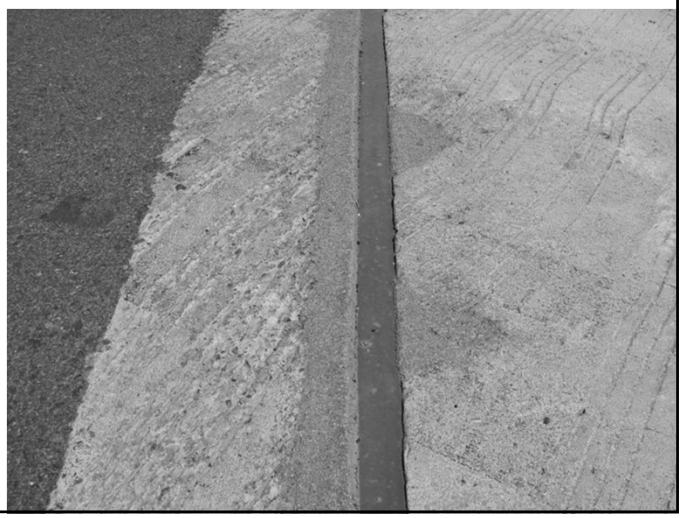

Expansion Joints

Common Joint Types:

- Sawcut
- Preformed Joint Material
- Poured Joint
- Asphalt Plug Joint
- Compression Seal
- Strip Seal
- Segmental Joint
- Finger Joint
- Modular Joint

Increasing Joint Width

Sawcut

Panel End Detail

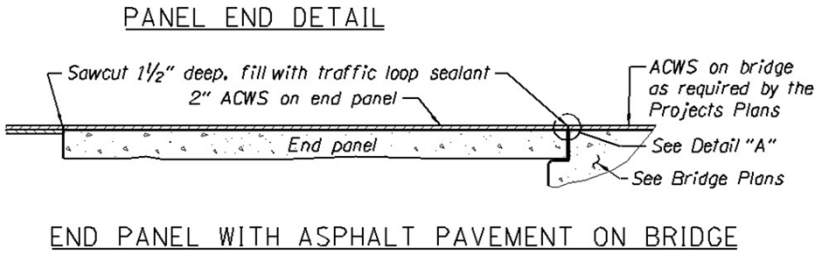

- Sawcut 1 1/2″
- Fill With Traffic Loop Sealant

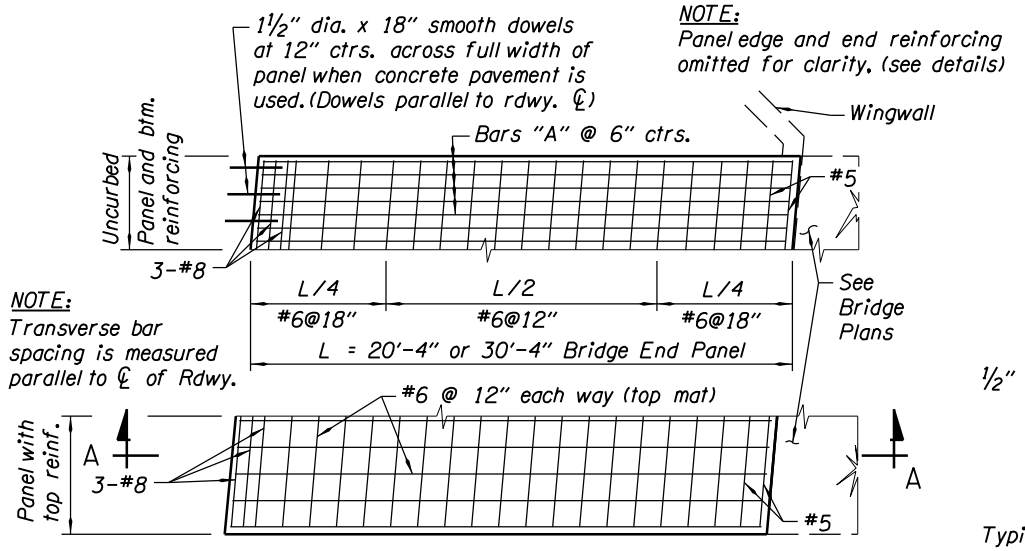

PLAN: TYPICAL END PANEL

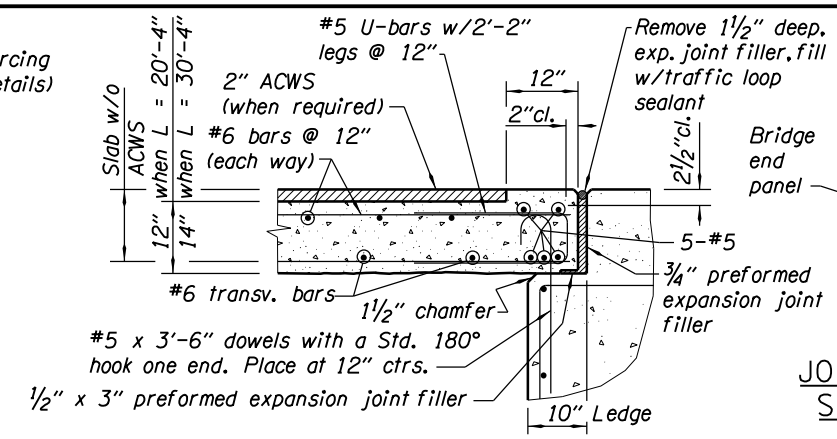

TYPICAL BRIDGE END DETAIL
WITHOUT EXPANSION JOINT BLOCKOUT

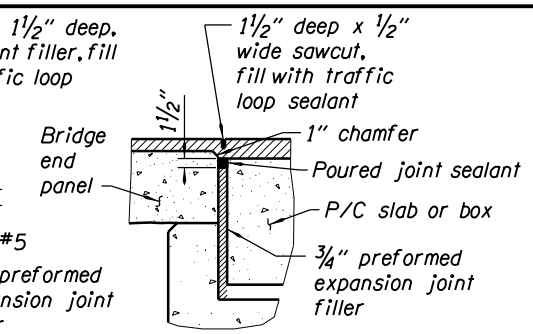

JOINT DETAIL with
SLABS or BOXES
DETAIL "A"

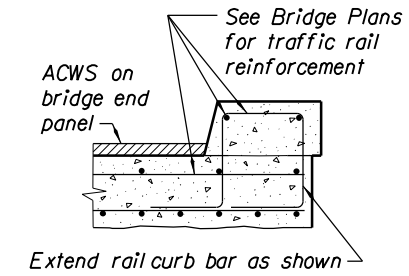

CURB EDGE DETAIL

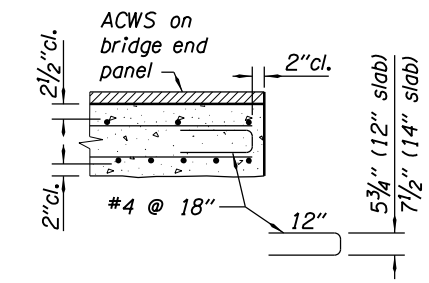

UNCURBED EDGE DETAIL

Typical blockout for expansion joint assembly (each side of joint) unless shown otherwise on Project Plans. Space bars in blockout to avoid expansion joint assembly anchorages.

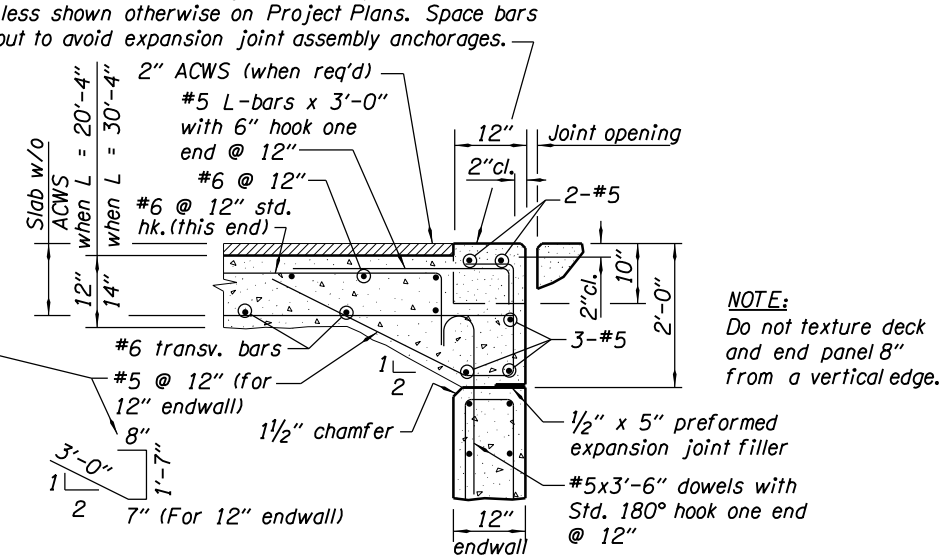

NOTE:
Do not texture deck and end panel 8" from a vertical edge.

BRIDGE END DETAIL WITH
EXPANSION JOINT BLOCKOUT

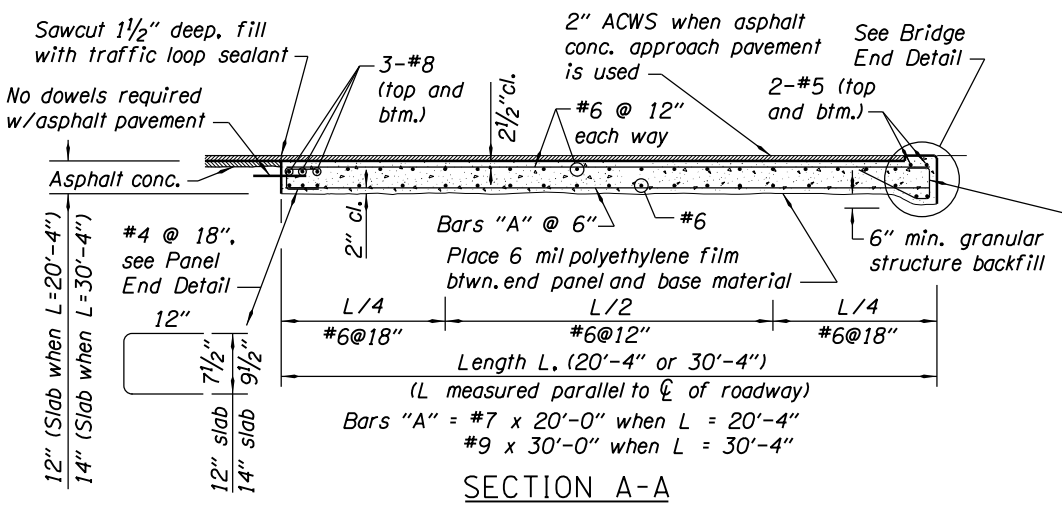

SECTION A-A

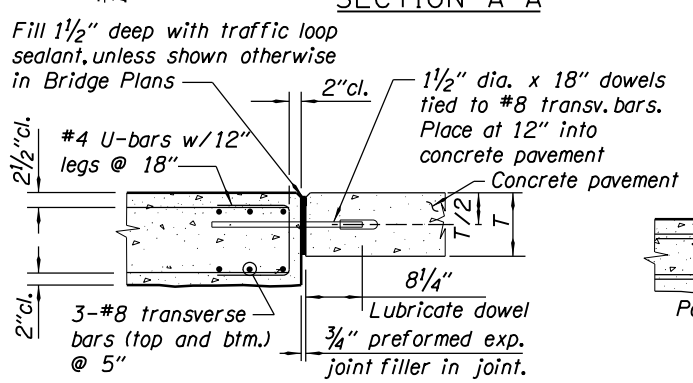

PANEL END DETAIL

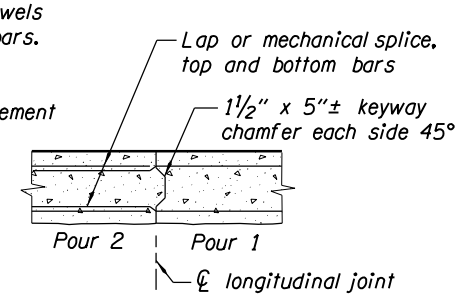

LONGITUDINAL JOINT DETAIL

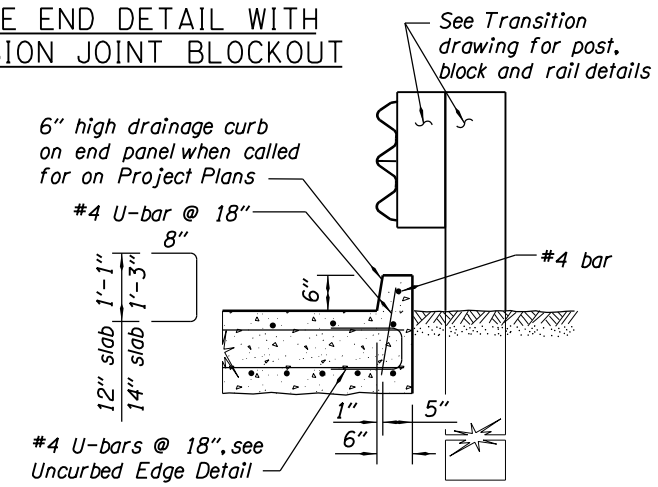

DRAINAGE CURB EDGE DETAIL

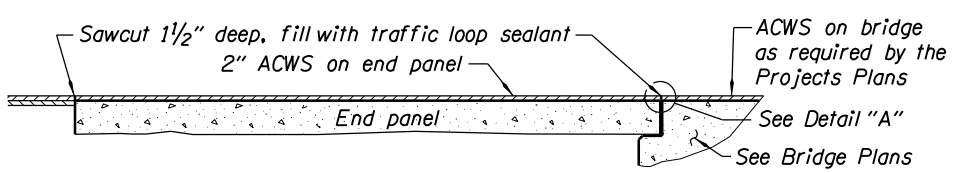

END PANEL WITH ASPHALT PAVEMENT ON BRIDGE

PANEL LENGTH SELECTION CRITERIA

Generally, use an end panel length of 30'-4" if any of the following conditions exist:

- All interstate highways.
- All state highways with 20 year projected ADTT > 1000.
- End bents skewed > 30 degrees.
- Abutment depth > 20 ft (from bottom of footing or cap to top of deck).
- End fills with anticipated post-construction settlement > 1 inch.

Use 20'-4" long end panels when the foregoing situations do not occur.

GENERAL NOTES:

See Project Plans for bridge rail, median barrier, and/or guardrail transition details.

Bridge end panels designed for HL-93 loading according to AASHTO LRFD Bridge Design Specifications with an allowance of 25 psf for present wearing surface and 25 psf for future wearing surface (Span = L - 3'-0" for 20 ft panel and L - 4'-6" for 30 ft panel).

Provide Class HPC 4000 - 1½", or 1" concrete.

Provide reinforcing steel conforming to AASHTO Specification M31 (ASTM A615) Gr. 60 or A706. Place steel 2" clear of nearest face of concrete unless shown otherwise. Use the following splice lengths unless shown otherwise:

Bar Size		3	4	5	6	7	8	9	10	11
Splice Length	Uncoated	1'-0"	1'-4"	1'-8"	2'-0"	2'-8"	3'-6"	4'-4"	5'-7"	6'-9"
	Epoxy Coated	1'-5"	1'-10"	2'-4"	2'-10"	3'-9"	4'-11"	6'-1"	7'-10"	9'-6"

Provide the panel length shown on the Project Plans.

Provide ¾" chamfer at all top transverse concrete edges (each end of end panels and each end of bridge).

Longitudinal construction joints are allowed only when permitted by the Engineer or when shown on the Project Plans.

When a longitudinal construction joint is permitted, locate joint on a lane line.

Provide dowels conforming to AASHTO Specification M31 (ASTM A615).

Use the details on this sheet unless shown otherwise on the Project Plans.

Flare end panel as required. Maintain Bar "A" spacing requirements at midspan.

Support top and bottom mat reinforcing steel at 3'-0" max. centers each way. Use #4 C-bars w/8" legs, or approved bar support chairs for top mat.

For additional reinforcing bars needed in the end panel, see bridge rail and transition drawings in project plans.

CALC. BOOK NO. 5773

BASELINE REPORT DATE 11-JUL-2014

NOTE: All material and workmanship shall be in accordance with the current Oregon Standard Specifications

The selection and use of this Standard Drawing, while designed in accordance with generally accepted engineering principles and practices, is the sole responsibility of the user and should not be used without consulting a Registered Professional Engineer.

OREGON STANDARD DRAWINGS

BRIDGE END PANEL

2015

DATE	REVISION DESCRIPTION

br165.dgn 04-2014

BR165

Effective Date: December 1, 2015 - May 31, 2016

Preformed Joint Material

Preformed Joint Material

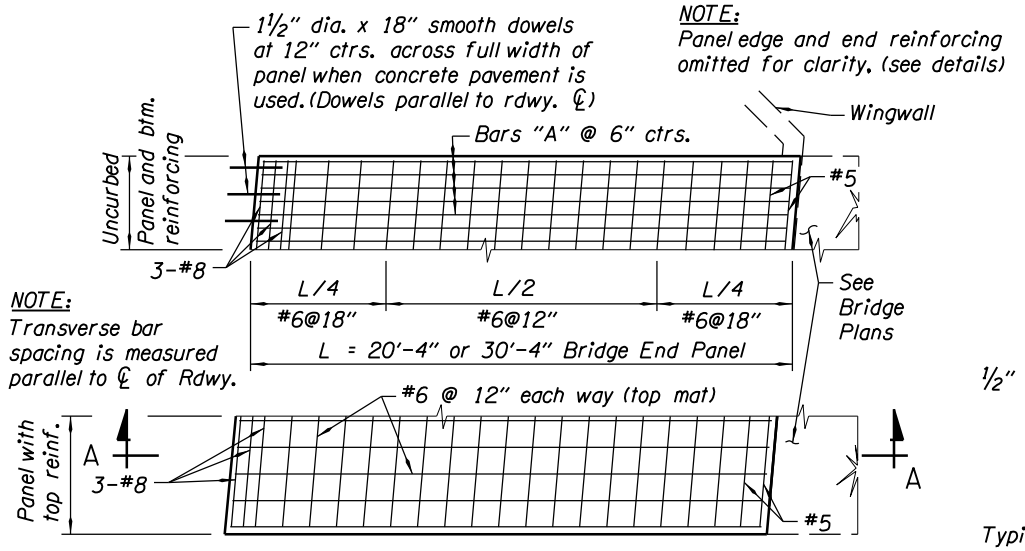

PLAN: TYPICAL END PANEL

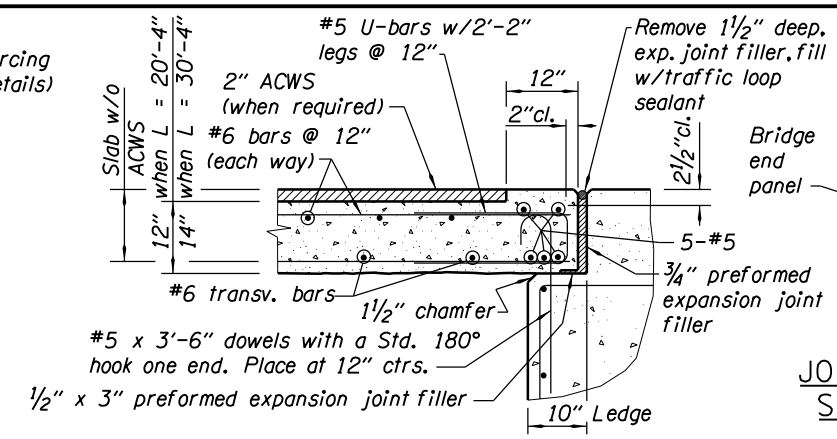

TYPICAL BRIDGE END DETAIL
WITHOUT EXPANSION JOINT BLOCKOUT

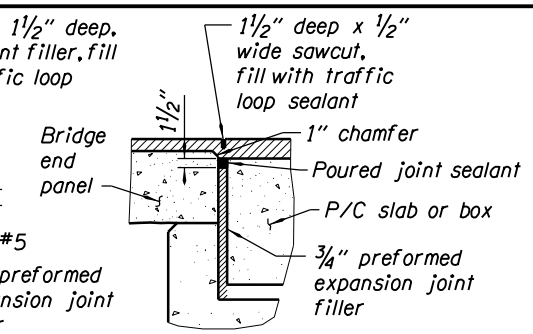

JOINT DETAIL with
SLABS or BOXES
DETAIL "A"

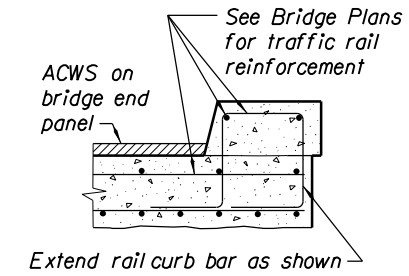

CURB EDGE DETAIL

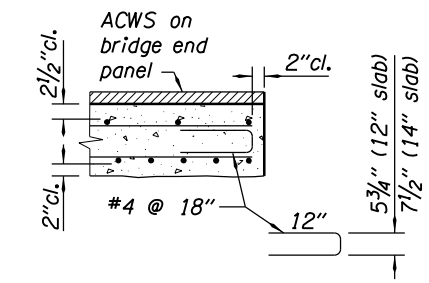

UNCURBED EDGE DETAIL

Typical blockout for expansion joint assembly (each side of joint) unless shown otherwise on Project Plans. Space bars in blockout to avoid expansion joint assembly anchorages.

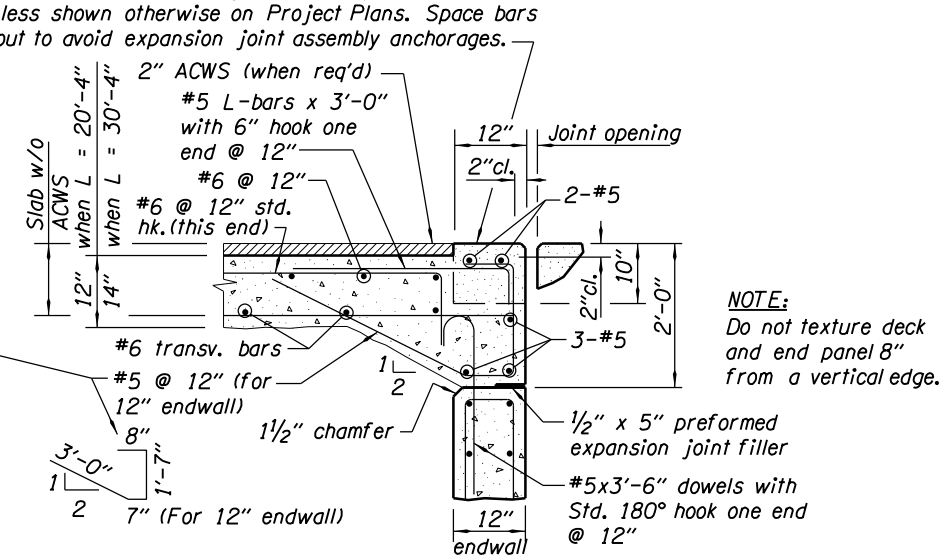

NOTE:
Do not texture deck and end panel 8" from a vertical edge.

BRIDGE END DETAIL WITH
EXPANSION JOINT BLOCKOUT

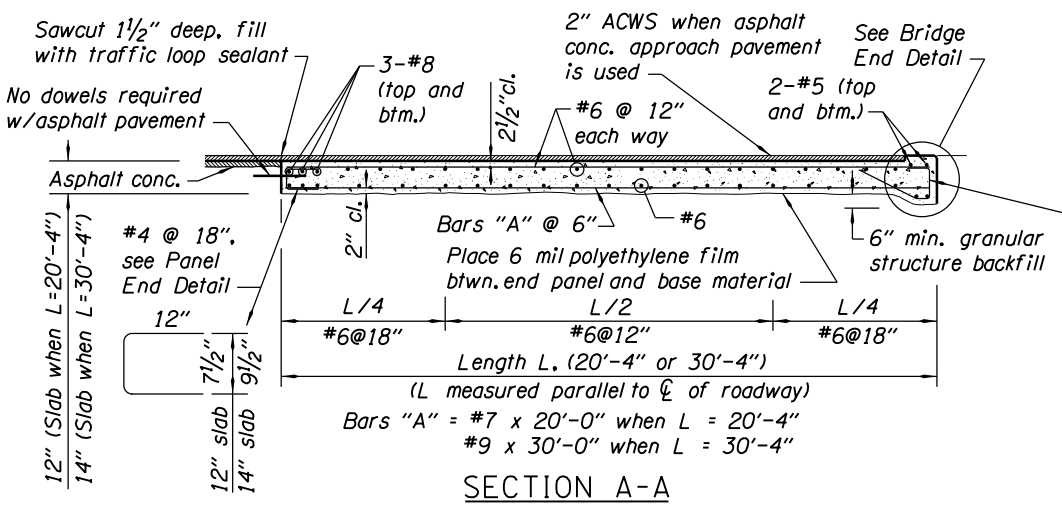

SECTION A-A

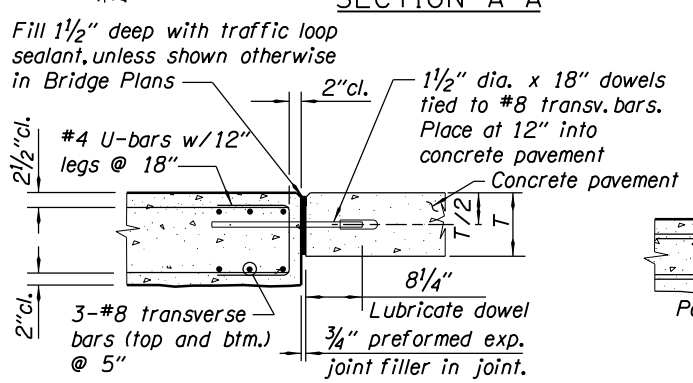

PANEL END DETAIL

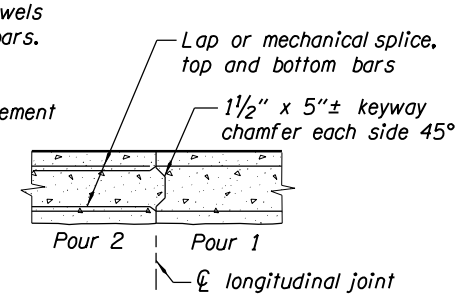

LONGITUDINAL JOINT DETAIL

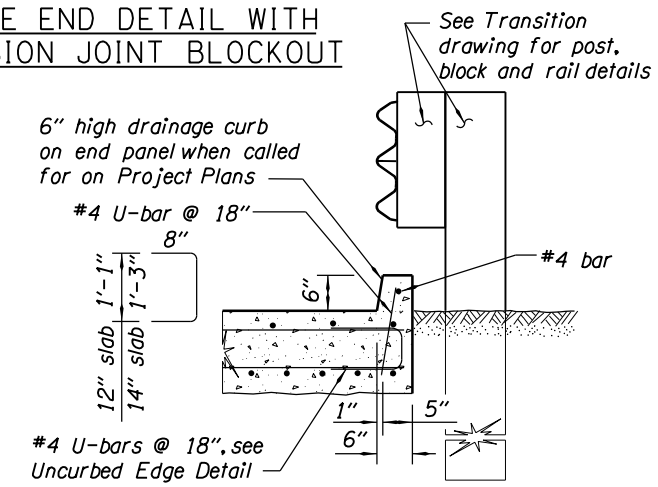

DRAINAGE CURB EDGE DETAIL

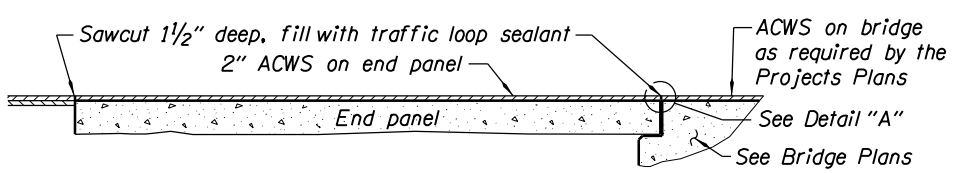

END PANEL WITH ASPHALT PAVEMENT ON BRIDGE

PANEL LENGTH SELECTION CRITERIA

Generally, use an end panel length of 30'-4" if any of the following conditions exist:

- All interstate highways.
- All state highways with 20 year projected ADTT > 1000.
- End bents skewed > 30 degrees.
- Abutment depth > 20 ft (from bottom of footing or cap to top of deck).
- End fills with anticipated post-construction settlement > 1 inch.

Use 20'-4" long end panels when the foregoing situations do not occur.

GENERAL NOTES:

See Project Plans for bridge rail, median barrier, and/or guardrail transition details.

Bridge end panels designed for HL-93 loading according to AASHTO LRFD Bridge Design Specifications with an allowance of 25 psf for present wearing surface and 25 psf for future wearing surface (Span = L - 3'-0" for 20 ft panel and L - 4'-6" for 30 ft panel).

Provide Class HPC 4000 - 1½", or 1" concrete.

Provide reinforcing steel conforming to AASHTO Specification M31 (ASTM A615) Gr. 60 or A706. Place steel 2" clear of nearest face of concrete unless shown otherwise. Use the following splice lengths unless shown otherwise:

Bar Size		3	4	5	6	7	8	9	10	11
Splice Length	Uncoated	1'-0"	1'-4"	1'-8"	2'-0"	2'-8"	3'-6"	4'-4"	5'-7"	6'-9"
	Epoxy Coated	1'-5"	1'-10"	2'-4"	2'-10"	3'-9"	4'-11"	6'-1"	7'-10"	9'-6"

Provide the panel length shown on the Project Plans.

Provide ¾" chamfer at all top transverse concrete edges (each end of end panels and each end of bridge).

Longitudinal construction joints are allowed only when permitted by the Engineer or when shown on the Project Plans.

When a longitudinal construction joint is permitted, locate joint on a lane line.

Provide dowels conforming to AASHTO Specification M31 (ASTM A615).

Use the details on this sheet unless shown otherwise on the Project Plans.

Flare end panel as required. Maintain Bar "A" spacing requirements at midspan.

Support top and bottom mat reinforcing steel at 3'-0" max. centers each way. Use #4 C-bars w/8" legs, or approved bar support chairs for top mat.

For additional reinforcing bars needed in the end panel, see bridge rail and transition drawings in project plans.

CALC. BOOK NO. 5773

BASELINE REPORT DATE 11-JUL-2014

NOTE: All material and workmanship shall be in accordance with the current Oregon Standard Specifications

The selection and use of this Standard Drawing, while designed in accordance with generally accepted engineering principles and practices, is the sole responsibility of the user and should not be used without consulting a Registered Professional Engineer.

OREGON STANDARD DRAWINGS

BRIDGE END PANEL

2015

DATE	REVISION DESCRIPTION

br165.dgn 04-2014

BR165

Effective Date: December 1, 2015 - May 31, 2016

PREFORMED EXPANSION JOINT FILLER

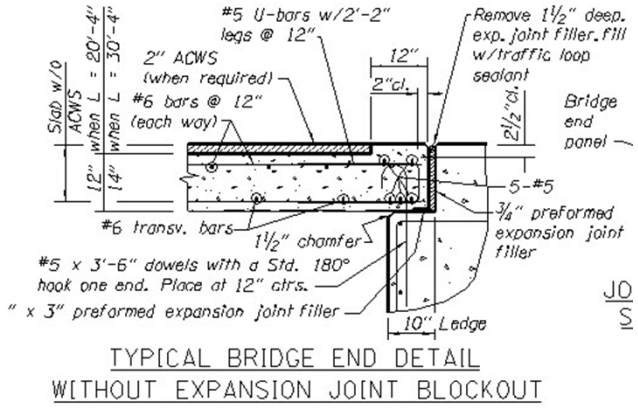

- Remove 1 1/2″ Deep
- Fill With Traffic Loop Sealant

Poured Joint

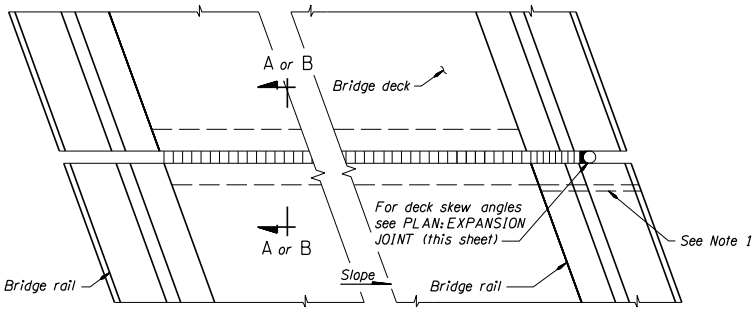

PLAN @ DECK JOINT

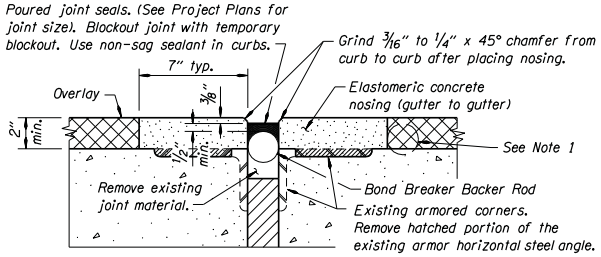

REHABILITATIVE BRIDGE JOINT

(Armored joint with AC or PCC Overlay)

NOTE 1:

Provide 2" dia. drain holes (vert. or horiz.) at lowest point on AC at gutterline (for Type "F" AC only) Place drain on uphill side of joint. Show location of holes on project plans.

Poured Joint Seals		
Total Movement Range	Joint width Installation	
	min.	max.
1/2"	1"	1 1/2"
3/4"	1"	1 3/4"
1"	1"	2"
1 1/4"	1 1/4"	2 1/2"
1 1/2"	1 1/2"	3"

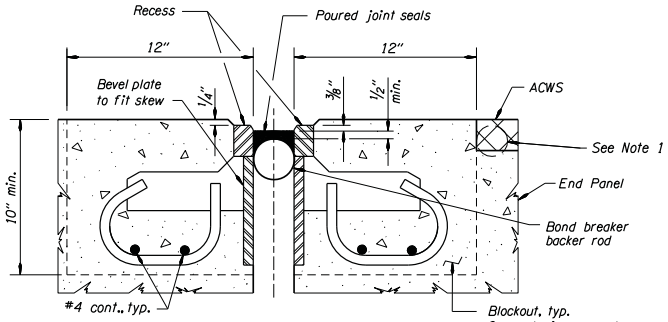

SECTION A-A

with ARMOR for new bridges

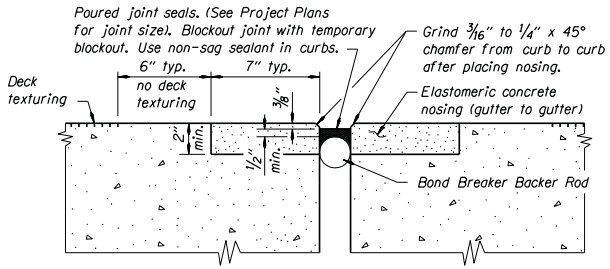

SECTION B-B

* W/O ARMOR

* For rehabilitation of existing bridges or for new bridges that are scheduled for overlay in the near future.

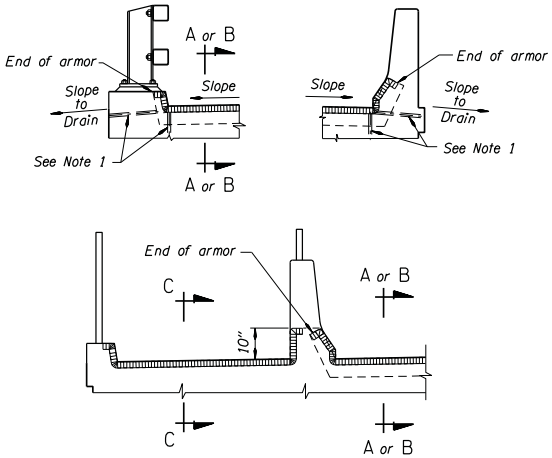

SECTIONS AT RAIL

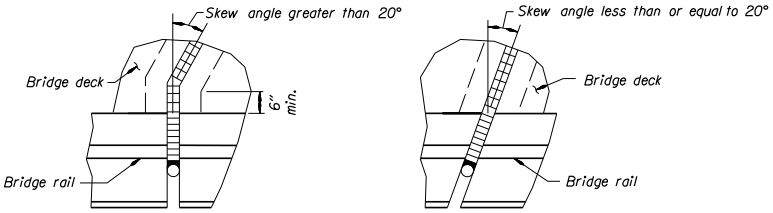

Note: For deck skew angle greater than 30°, see Joint Specialist.

PLAN: EXPANSION JOINT

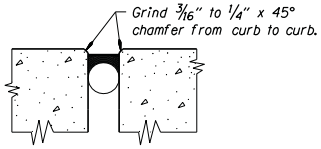

SECTION C-C

Use Section C-C for sidewalks

NOTES:

Install poured joint seals in one continuous piece. Place curb to curb as shown in sections at rail. See dwg. BR141 for joint armor for new construction when shown on the project plans.

See Project Plans for details not shown.

Accompanied by dwg. BR141

CALC. BOOK NO. _____

BASELINE REPORT DATE 15-FEB-2008

NOTE: All material and workmanship shall be in accordance with the current Oregon Standard Specifications

The selection and use of this Standard Drawing, while designed in accordance with generally accepted engineering principles and practices, is the sole responsibility of the user and should not be used without consulting a Registered Professional Engineer.

OREGON STANDARD DRAWINGS

EXPANSION JOINT WITH POURED SEALS

2008

DATE	REVISION DESCRIPTION

br140.dgn 12-08

BR140

Effective Date: December 1, 2012 - May 31, 2013

1:8 - BR140

Poured Joint

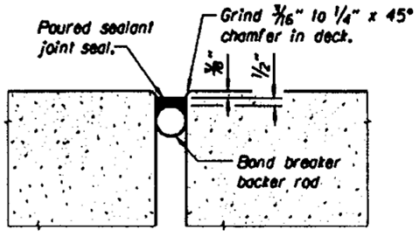

SECTION B-B
W/O ARMOR
No Scale

POURED JOINT SEALANT

NOV 10 2003

NOV 10 2003

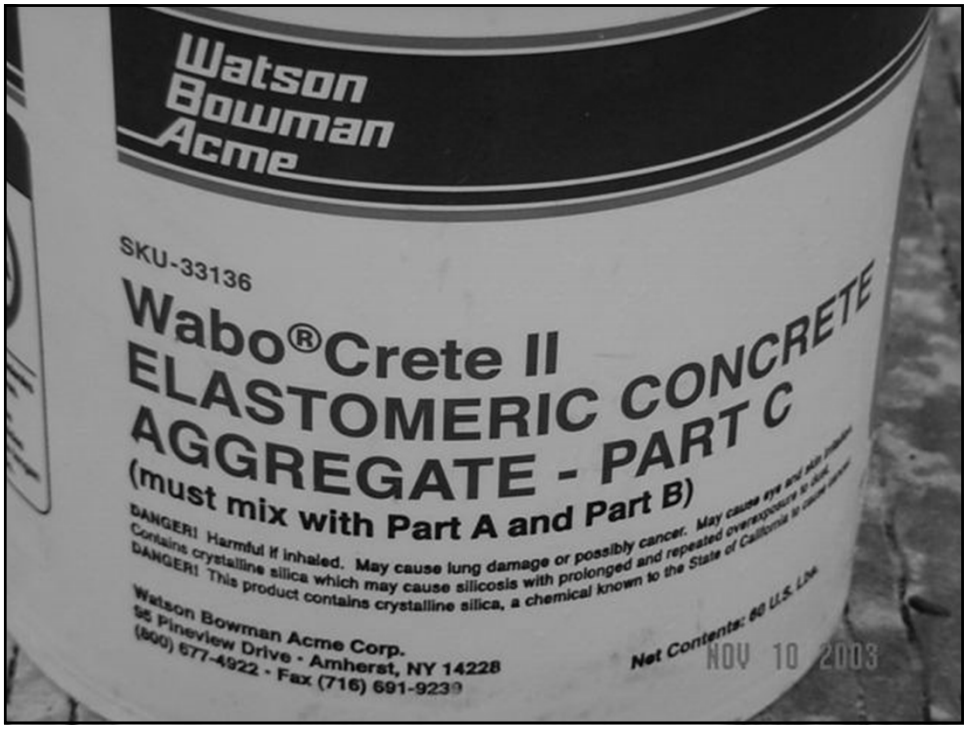
Watson
Bowman
Acme
SKU-33136
Wabo®Crete II
ELASTOMERIC CONCRETE
AGGREGATE - PART C
(must mix with Part A and Part B)
DANGER! Harmful if inhaled. May cause lung damage or possibly cancer.
Contains crystalline silica which may cause silicosis with prolonged and repeated overexposure to dust.
DANGER! This product contains crystalline silica, a chemical known to the State of California to cause cancer.
Watson Bowman Acme Corp.
95 Pineview Drive - Amherst, NY 14228
(800) 677-4922 - Fax (716) 691-9239
Net Contents: 60 U.S. Liq.
NOV 10 2003

Asphalt Plug Joint

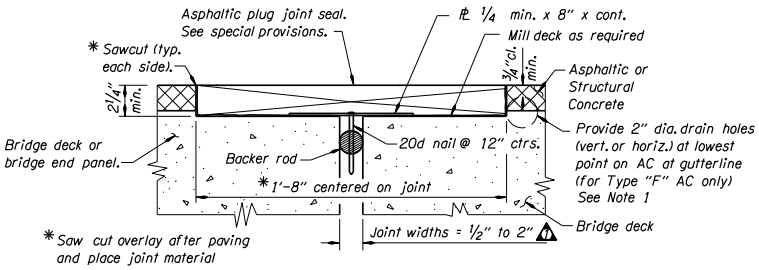

ASPHALTIC PLUG JOINT SEAL ~ DETAIL "A"

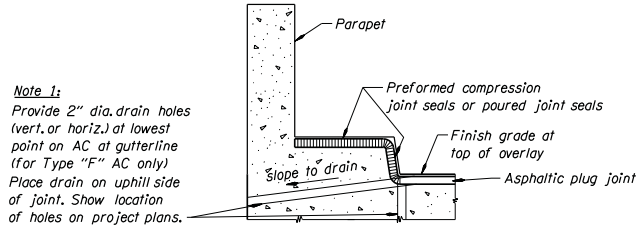

SEAL DETAIL AT PARAPET

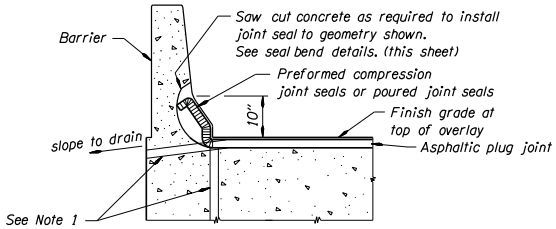

SEAL DETAIL AT BARRIER

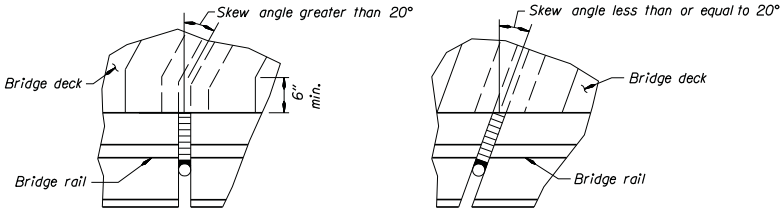

Note: For deck skew angle greater than 30°, see Joint Specialist.

PLAN: EXPANSION JOINT

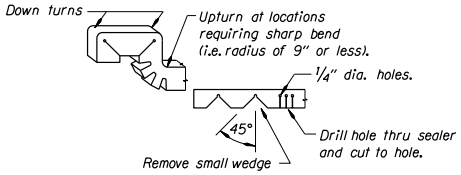

JOINT SEAL BEND JOINT

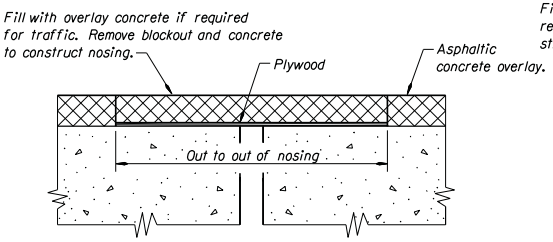

TEMPORARY OVERLAY AT JOINTS WITH ASPHALTIC CONCRETE OVERLAY

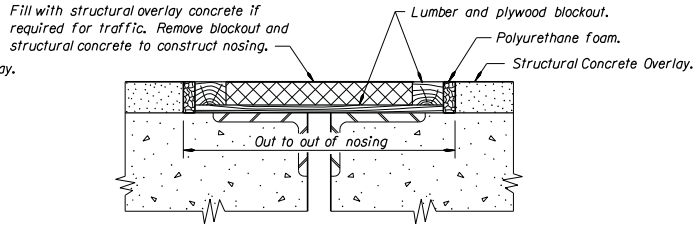

TEMPORARY OVERLAY AT JOINTS WITH STRUCTURAL CONCRETE OVERLAY

br157.dgn 01-12

BR157

CALC. BOOK NO. _____

BASELINE REPORT DATE 24-JAN-2008

NOTE: All material and workmanship shall be in accordance with the current Oregon Standard Specifications

The selection and use of this Standard Drawing, while designed in accordance with generally accepted engineering principles and practices, is the sole responsibility of the user and should not be used without consulting a Registered Professional Engineer.

OREGON STANDARD DRAWINGS

ASPHALTIC PLUG JOINT SEAL

2008

DATE	REVISION DESCRIPTION
01-12	Changed joint widths from 3/4" to 1/2" and 2 1/2" to 2"

Effective Date: December 1, 2012 - May 31, 2013

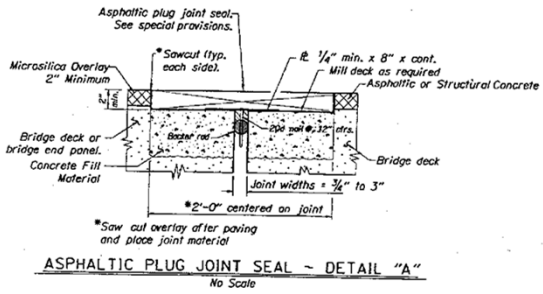

ASPHALTIC PLUG JOINT SEAL ~ DETAIL "A"
No Scale

Temporary Asphalt Plug Joint

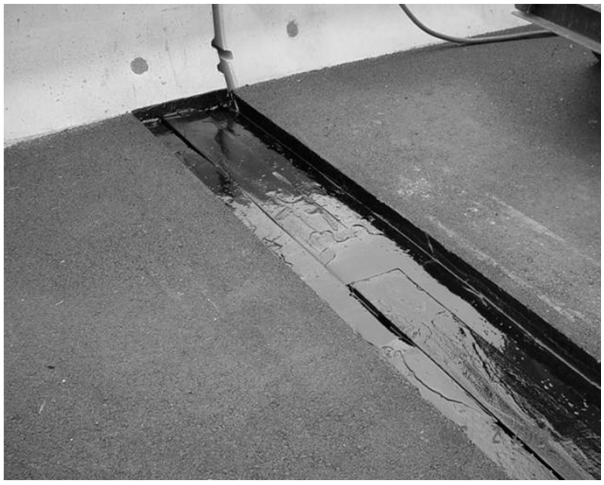

HOT

Asphalt Plug Joint

Pothole in Asphalt Plug Joint

Compression Seal

Compression Seal with Armor

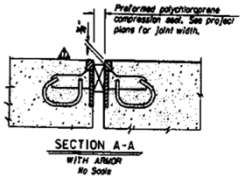

For movement up to 1 1/2″

SEAL DATA		Polychloroprene Compression Seals					Poured Joint Sealant	
Seal Type (*)	Total Movement Range	Nominal Size		Joint Width		Minimum Installation Width	Joint Width Installation	
		Width	Height	Min.	Max.		min.	max.
A	½″	1¼″	1¼″	½″	1″	¾″	1″	1½″
B	¾″	2″	2″	⅞″	1⅝″	1¼″	1″	1¾″
C	1″	2½″	2¾″	1″	2″	1½″	1″	2″
D	1¼″	3″	3¼″	1¼″	2½″	1¾″	1¼″	2½″
E	1½″	3½″	3½″	1⅜″	2⅝″	2¼″	1½″	3″

* Polychloroprene seal only.

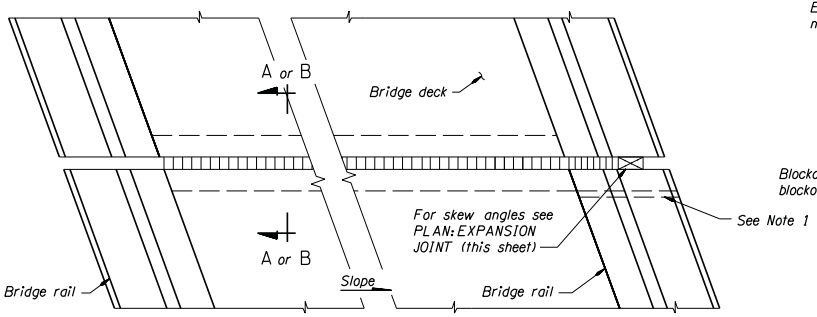

PLAN @ DECK JOINT

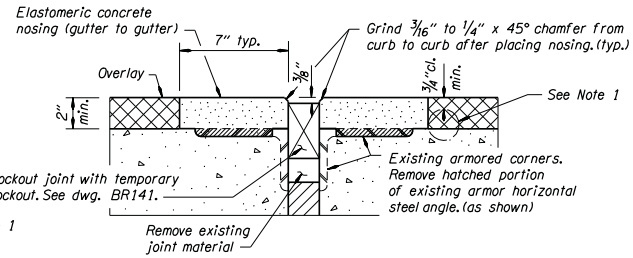

REHABILITATIVE BRIDGE JOINT

(Armored joint with AC or PCC Overlay)

NOTE 1:
Provide 2" dia. drain holes (vert. or horiz.) at lowest point on AC at gutterline (for Type "F" AC only) Place drain on uphill side of joint. Show location of holes on project plans.

Preformed Compression Joint Seals

Seal Type	Total Movement Range	Nominal Size		Joint Width		Minimum Installation Width
		Width	Height	Min.	Max.	
A	1/2"	1 1/4"	1 1/4"	1/2"	1"	3/4"
B	3/4"	2"	2"	7/8"	1 5/8"	1 1/4"
C	1"	2 1/2"	2 3/4"	1"	2"	1 1/2"
D	1 1/4"	3"	3 1/4"	1 1/4"	2 1/2"	1 3/4"
E	1 1/2"	3 1/2"	3 1/2"	1 3/8"	2 7/8"	2 1/4"

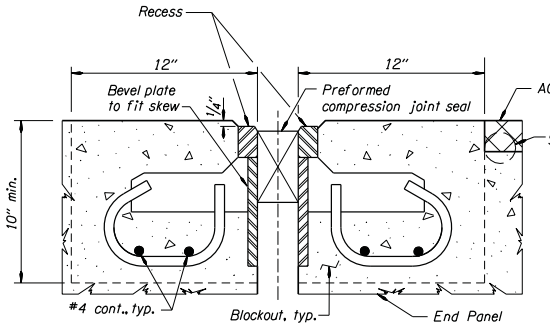

SECTION A-A

with ARMOR for new bridges

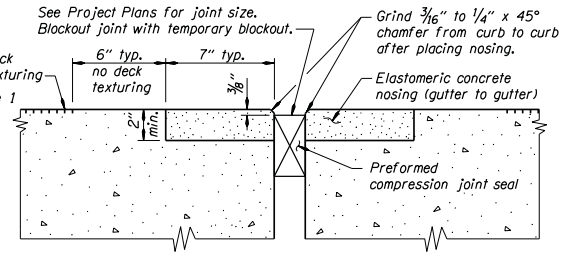

SECTION B-B

*W/O ARMOR

* For rehabilitation of existing bridges or for new bridges that are scheduled for overlay in the near future.

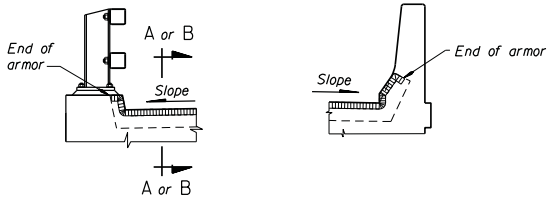

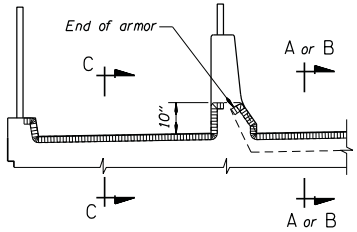

SECTIONS AT RAIL

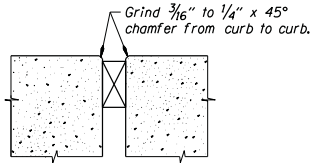

SECTION C-C

Use Section C-C for sidewalks

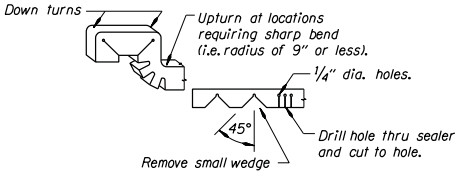

PREFORMED COMPRESSION JOINT SEAL BEND JOINT

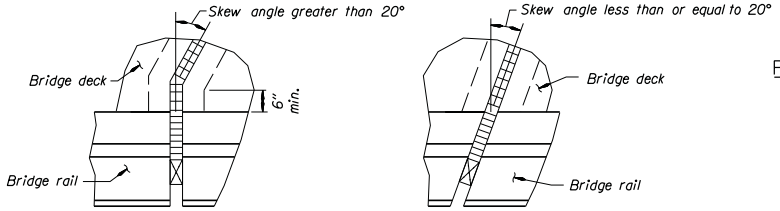

Note: For skew angle greater than 30°, see Joint Specialist.

PLAN: EXPANSION JOINT

NOTES:
Install preformed compression joint seal in one continuous piece. Place curb to curb as shown in sections at rail. See dwg. BR141 for joint armor for new construction when shown on the project plans.
See Project Plans for details not shown.

Accompanied by dwg. BR141

CALC. BOOK NO. _____

BASELINE REPORT DATE 20-JUN-2008

NOTE: All material and workmanship shall be in accordance with the current Oregon Standard Specifications

The selection and use of this Standard Drawing, while designed in accordance with generally accepted engineering principles and practices, is the sole responsibility of the user and should not be used without consulting a Registered Professional Engineer.

OREGON STANDARD DRAWINGS

EXPANSION JOINT WITH PREFORMED COMPRESSION SEALS

2008

DATE	REVISION DESCRIPTION

br139.dgn 12-08

BR139

Effective Date: December 1, 2012 - May 31, 2013

Compression Seal without Armor

Compression Seal End in Rail

Compression Seal End

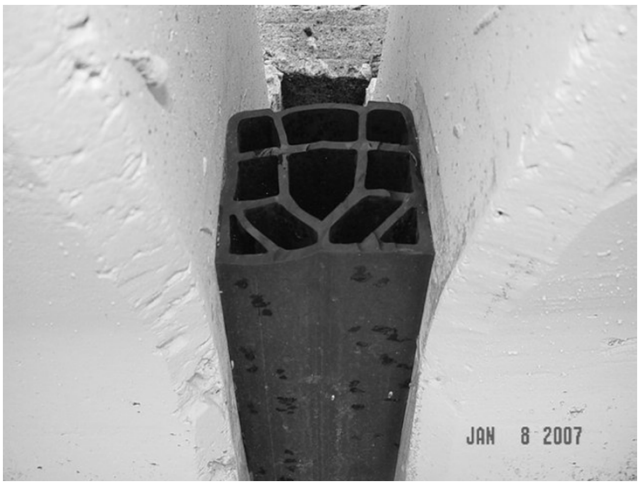

Compression Joint Repair

N Fk Quartz Cr

Styrofoam

D.S. BROWN
Delastilube 1520
The D.S. Brown Company
300 East Cherry Street
North Baltimore, OH 45872
(419) 257-3561
www.dsbrown.com
6160
1 Gallon (3.78 Liters)

sunnyside
xylol
Xileno
Enamel reducer.
Powerful solvent for:
Porch & deck enamels.
Anti-rust paints.
ONE GALLON (3.785 LITERS)

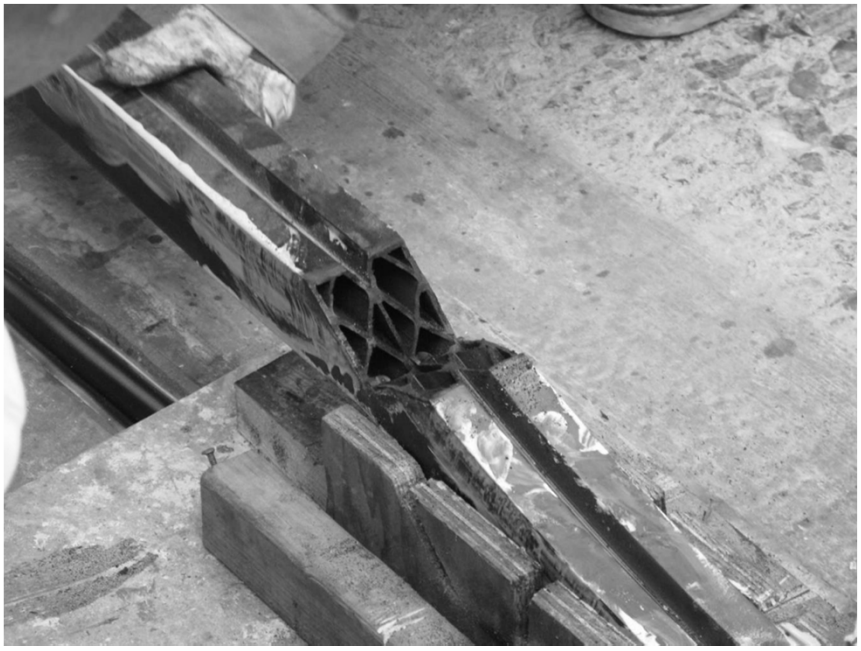

NOWAT

Strip Seal

br145.dgn 07-10 Welds Reviewed By .....

BR145

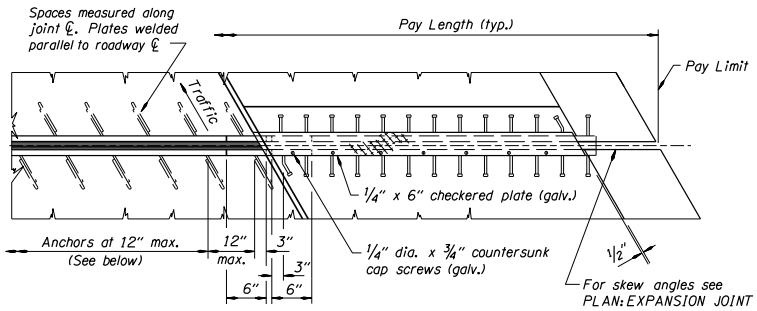

PLAN AT SIDEWALK

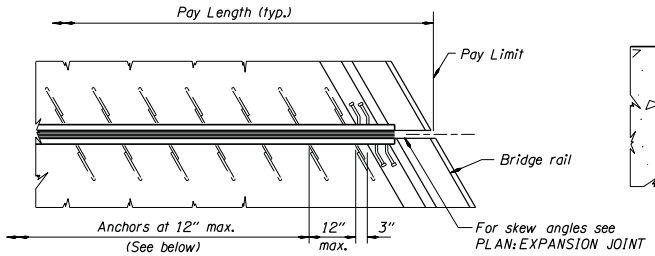

PLAN AT TYPE "F" RAIL

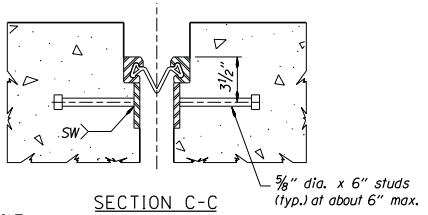

SECTION C-C

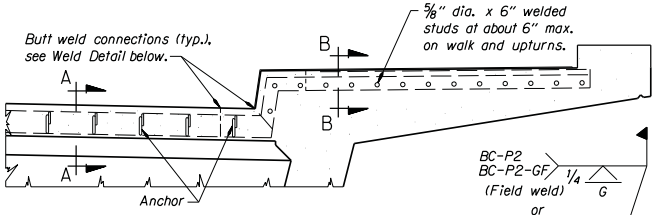

SECTION AT SIDEWALK

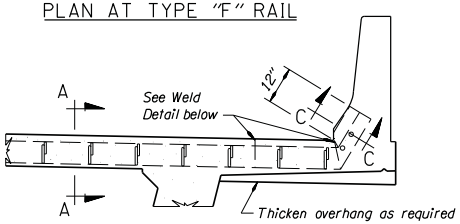

SECTION AT TYPE "F" RAIL

GENERAL NOTES:

The pay length for the preformed strip seal system is the horizontal length of the deck joint unless shown otherwise on the project plans.
Use reinforcing steel conforming to ASTM Specification A706.
Use structural steel shapes and plates conforming to AASHTO Specification M183 (ASTM A36).
Support the joint assembly so that proper grade is maintained during concrete placement.
The joint assembly may be shipped full length or field welded before or after setting to grade in the blockout.
Furnish and install the strip seal in one continuous piece gutter to gutter.
See project plans for seal size and blockout reinforcing steel.
See Special Provisions for additional requirements.

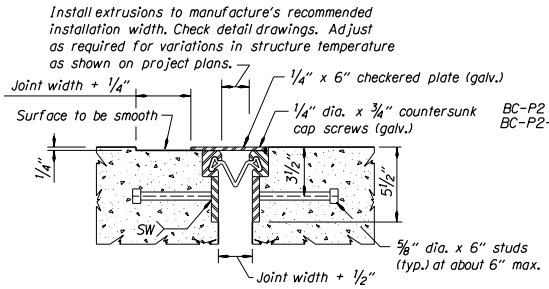

SECTION B-B

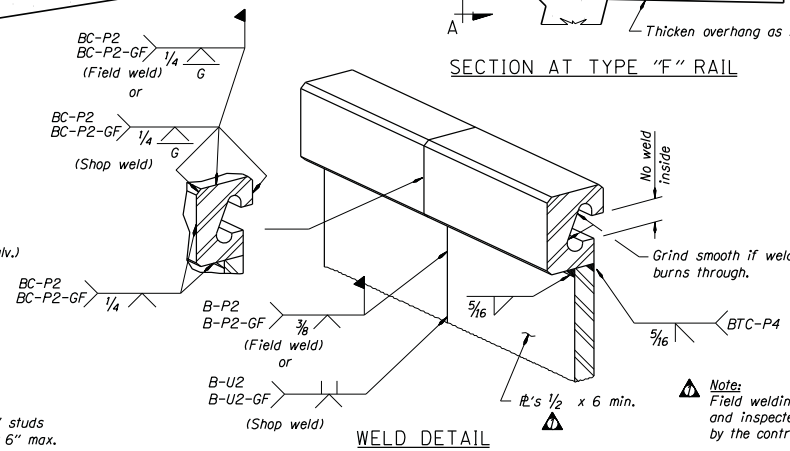

WELD DETAIL

Note:
Field welding shall be witnessed and inspected with VT (visual test) by the contractors CWI.

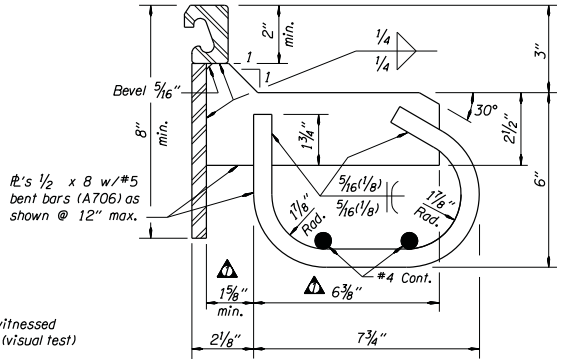

ANCHOR DETAIL

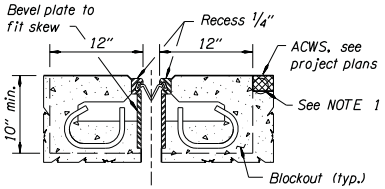

SECTION A-A

NOTE 1:
Provide 2" dia. drain holes (vert. or horiz.) at lowest point on AC at gutterline (for Type "F" AC only) Place drain on uphill side of joint. Show location of holes on project plans.

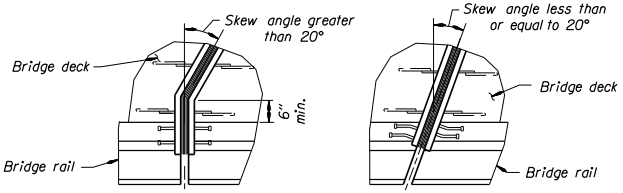

Note: For skew angle greater than 30°, see Joint Specialist.

PLAN: EXPANSION JOINT

CALC. BOOK NO.	BASELINE REPORT DATE 24-JAN-2008
The selection and use of this Standard Drawing, while designed in accordance with generally accepted engineering principles and practices, is the sole responsibility of the user and should not be used without consulting a Registered Professional Engineer.	NOTE: All material and workmanship shall be in accordance with the current Oregon Standard Specifications

OREGON STANDARD DRAWINGS

SINGLE STRIP SEAL EXPANSION JOINT

2008

DATE	REVISION DESCRIPTION
07-10	Changed plate size from 5/8 to 1/4. Added weld note.

Effective Date: December 1, 2012 - May 31, 2013

1:16 - BR145

Strip Seal

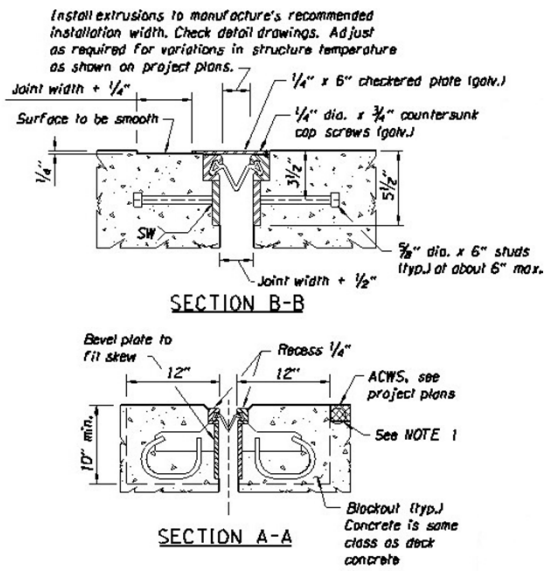

For movement up to 4″

Adjust for Temperature Variations

Install extrusions to manufacture's recommended installation width. Check detail drawings. Adjust as required for variations in structure temperature as shown on project plans. .

Coefficient of Expansion

- Steel 6.5×10^{-6} / °F
- Concrete 5.5×10^{-6} / °F
- Aluminum 13.1×10^{-6} / °F

Thermal Movement Example

- 100 ft steel girder bridge
- How much movement would you expect from a 15°F temperature change?

(0.0000065 / °F) (100 ft)(15 °F) = 0.01 ft

0.01 ft = 1/8″

Thermal Movement Exercise

- 600 ft steel girder bridge with joints at both ends.
- If the average temperature for the area is 70°F, how much would you adjust the joint for a closure pour if the beam temperature is 40°F?
- Do you increase or decrease the joint opening?

Strip Seal

Strip Seal

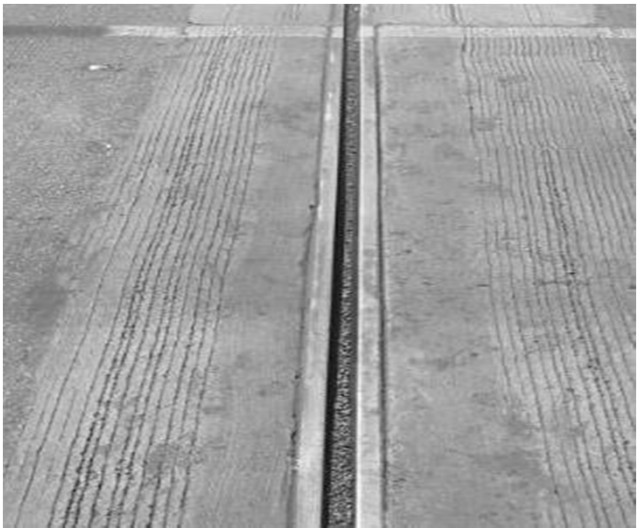

Strip Seal

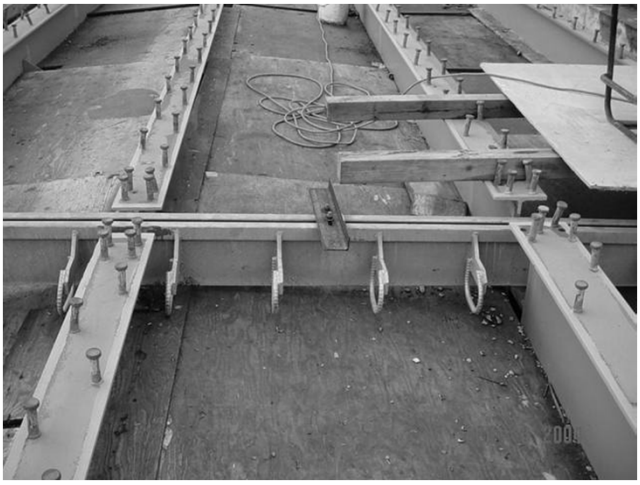

Strip Seal

Surface Not Level

Segmental Joint

Segmental Joint

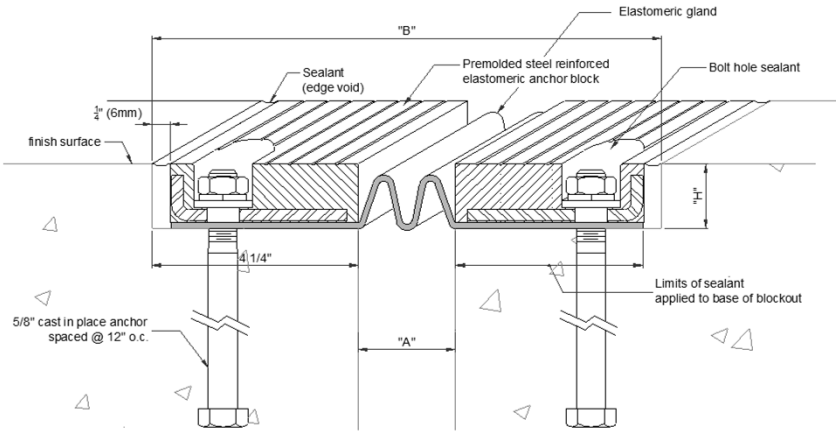

Allows for Movement Up to 4″

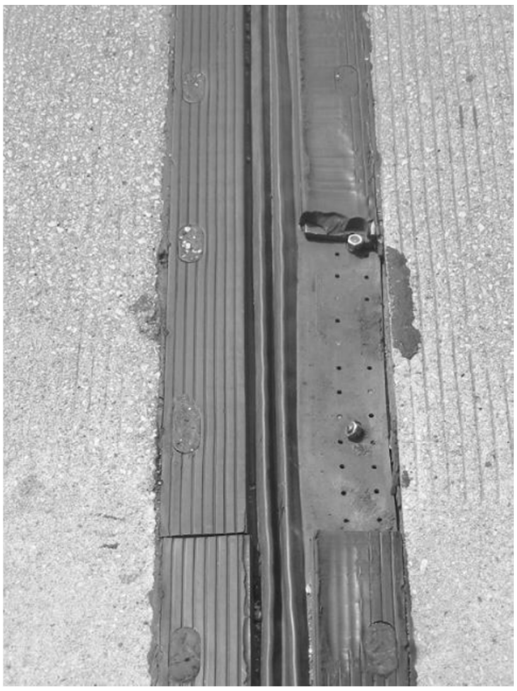

Segmental Joint

Finger Joint

Finger Joint

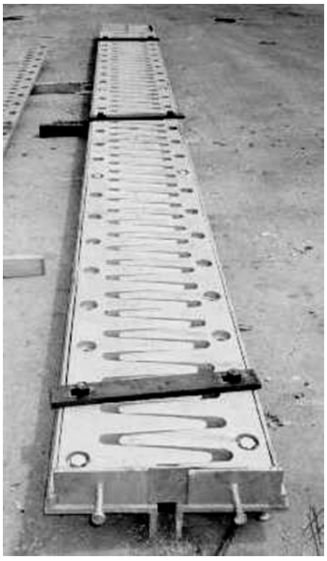

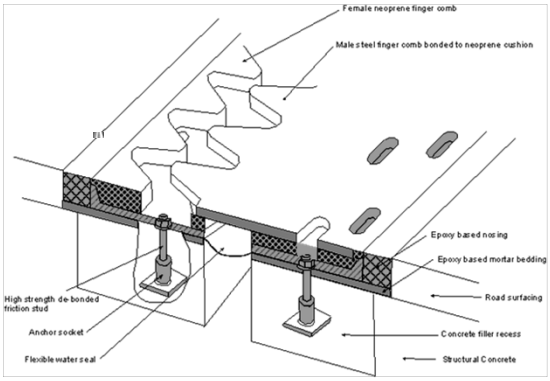

For movement up to 8″

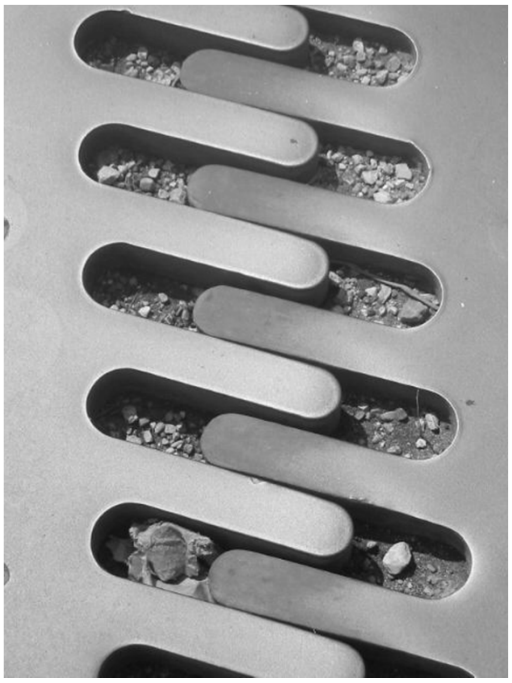

Finger Joint

Allows for Movement
Up to 8″

Finger Joint

Modular Joint

Modular Joint

Modular Joint

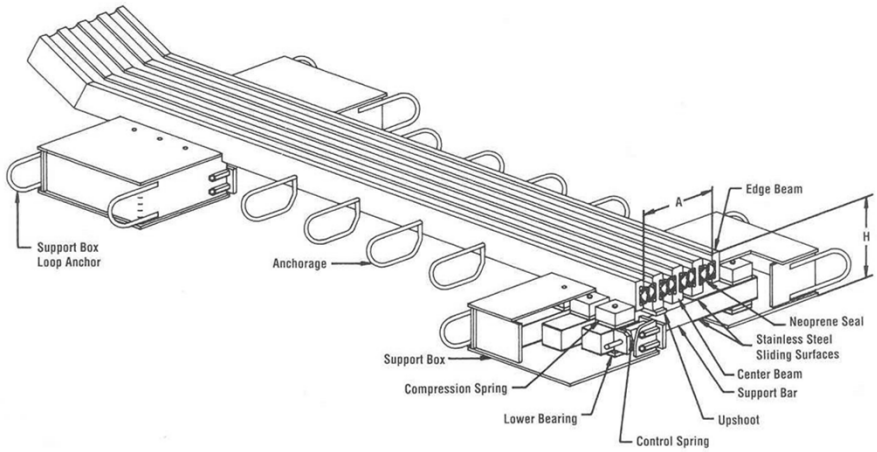

Allows for Large Movements

Modular Joint

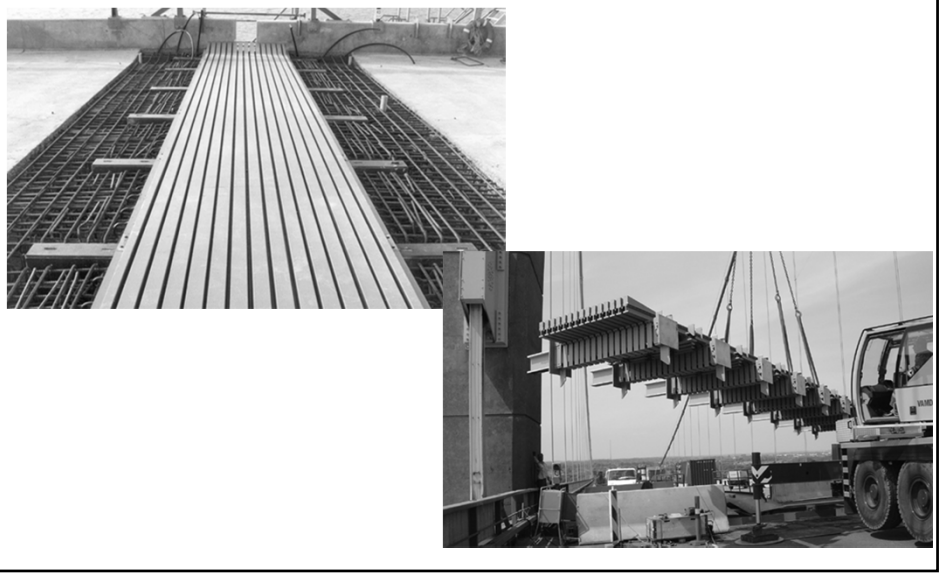

MC Overlay Preparation

Shotblasting

ROADABRATOR
GOFF
DiSA

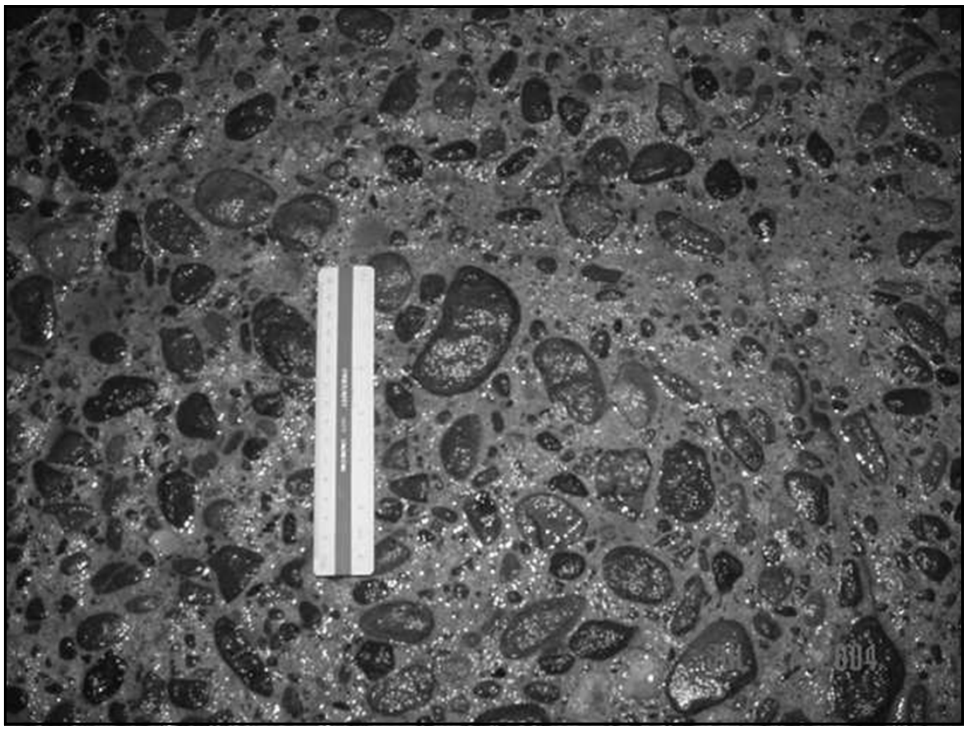

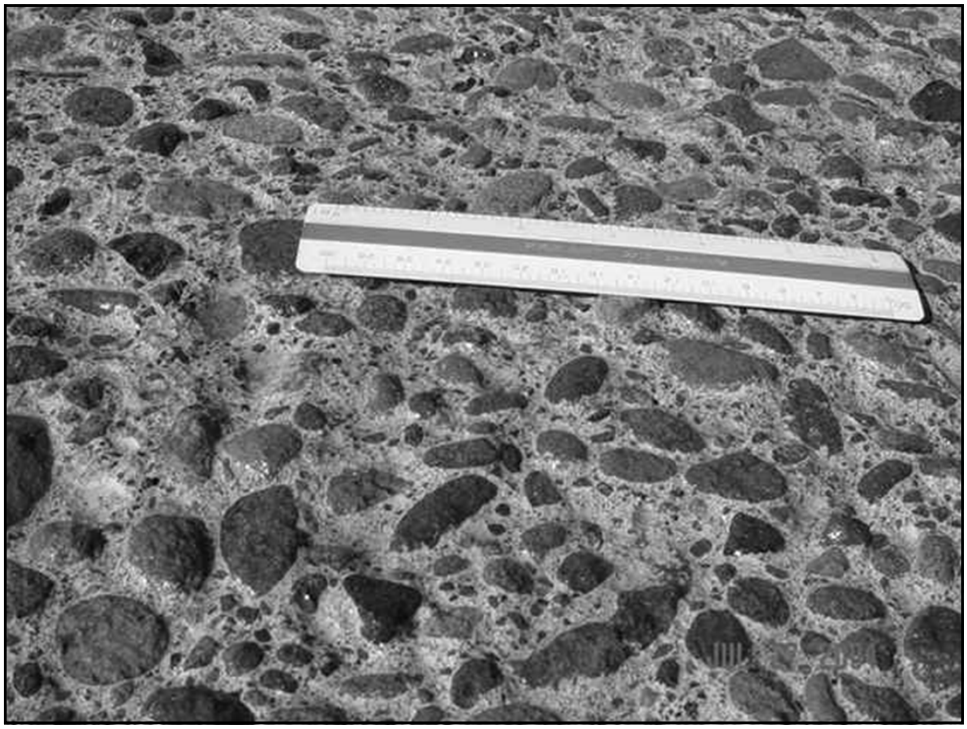

Hydroblast Surface

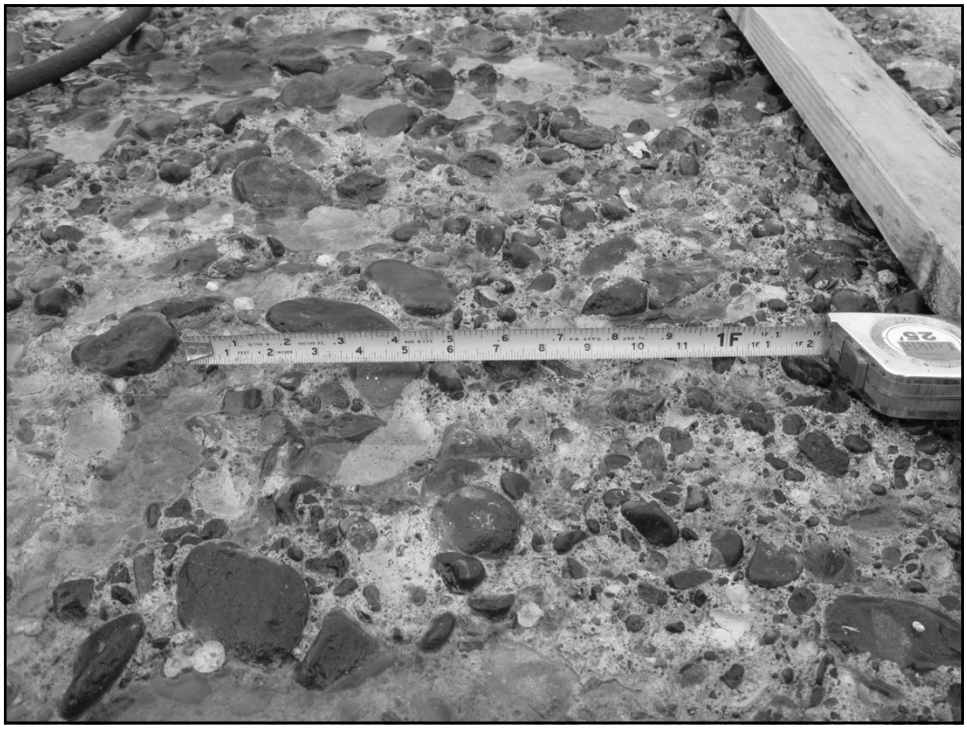

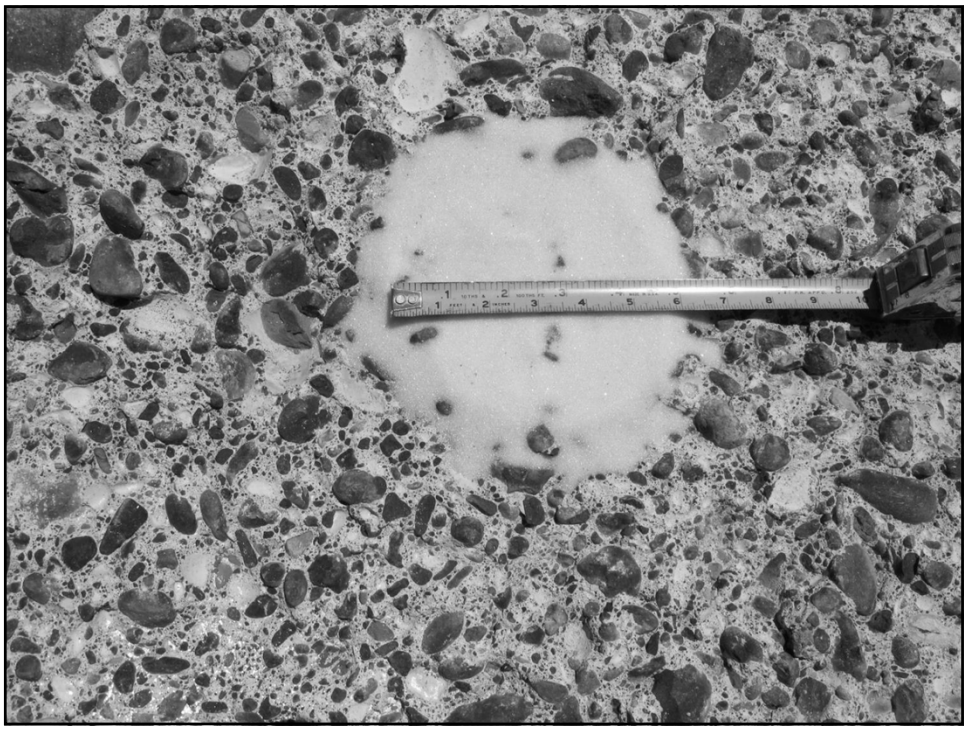

Designation: E 965 – 96 (Reapproved 2006)

Standard Test Method for Measuring Pavement Macrotexture Depth Using a Volumetric Technique[1]

This standard is issued under the fixed designation E 965; the number immediately following the designation indicates the year of original adoption or, in the case of revision, the year of last revision. A number in parentheses indicates the year of last reapproval. A superscript epsilon (ϵ) indicates an editorial change since the last revision or reapproval.

1. Scope

1.1 This test method describes a procedure for determining the average depth of pavement surface macrotexture (see 3.1) (**1**)[2] by careful application of a known volume of material on the surface and subsequent measurement of the total area covered. The technique is designed to provide an average depth value of only the pavement macrotexture and is considered insensitive to pavement microtexture characteristics.

1.2 The results obtained using this procedure to determine average pavement macrotexture depths do not necessarily agree or correlate directly with those obtained by other pavement macrotexture measuring methods (**1-5**).

1.3 The values stated in inch-pound units are to be regarded as the standard The values given in parentheses are mathematical conversions to SI units that are provided for information only and are not considered standard.

1.4 *This standard does not purport to address all of the safety concerns, if any, associated with its use. It is the responsibility of the user of this standard to establish appropriate safety and health practices and determine the applicability of regulatory limitations prior to use.*

2. Referenced Documents

2.1 *ASTM Standards:* [3]

D 1155 Test Method for Roundness of Glass Spheres
E 178 Practice for Dealing With Outlying Observations
E 867 Terminology Relating to Vehicle-Pavement Systems

3. Terminology

3.1 Terminology used in this standard conforms to Terminology E 867.

3.2 *Definition of Term Specific to This Standard:*

3.2.1 *pavement macrotexture*—the deviations of a pavement surface from a true planar surface with the characteristic dimensions of wavelength and amplitude from 0.5 mm up to those that no longer affect tire-pavement interaction.

4. Summary of Test Method

4.1 The standard materials and test apparatus consist of a quantity of uniform material, a container of known volume, a suitable wind screen or shield, brushes for cleaning the pavement surface, a flat disk for spreading the material on the surface, and a ruler or other measuring device for determining the area covered by the material. A laboratory balance is also recommended for further ensuring consistent amounts for each measurement sample.

4.2 The test procedure involves spreading a known volume of material on a clean and dry pavement surface, measuring the area covered, and subsequently calculating the average depth between the bottom of the pavement surface voids and the tops of surface aggregate particles. This measurement of pavement surface texture depth reflects the pavement macrotexture characteristics (**1, 5**).

NOTE 1—In spreading the material specified in this test method, the surface voids are completely filled flush to the tips of the surrounding aggregate particles. This test method is not considered suitable for use on grooved surfaces or pavements with large (≥1.0 in. (25 mm)) surface voids.

5. Significance and Use

5.1 This test method is suitable for field tests to determine the average macrotexture depth of a pavement surface. The knowledge of pavement macrotexture depth serves as a tool in characterizing the pavement surface texture. When used in conjunction with other physical tests, the macrotexture depth values derived from this test method may be used to determine the pavement skid resistance capability and the suitability of paving materials or finishing techniques. When used with other tests, care should be taken that all tests are applied at the same location. Improvements in pavement finishing practices and maintenance schedules may result from use of this test method.

[1] This test method is under the jurisdiction of ASTM Committee E17 on Vehicle-Pavement Systems and is the direct responsibility of Subcommittee E17.23 on Surface Characteristics Related to Tire–Pavement Slip Resistance.

Current edition approved Aug. 1, 2006. Published August 2006. Originally approved in 1983. Last previous edition approved in 2001 as E 965 – 96 (2001).

[2] The boldface numbers in parentheses refer to the list of references at the end of this test method.

[3] For referenced ASTM standards, visit the ASTM website, www.astm.org, or contact ASTM Customer Service at service@astm.org. For *Annual Book of ASTM Standards* volume information, refer to the standard's Document Summary page on the ASTM website.

Copyright © ASTM International, 100 Barr Harbor Drive, PO Box C700, West Conshohocken, PA 19428-2959, United States.

Copyright by ASTM Int'l (all rights reserved); Mon Dec 8 11:45:48 EST 2008
Downloaded/printed by
Keith Johnston (Oregon Dept Of Transportation) pursuant to License Agreement. No further reproductions authorized.

5.2 The texture depth measurements produced using this test method are influenced by pavement macrotexture characteristics and not significantly affected by pavement microtexture. Pavement aggregate particle shape, size, and distribution are texture features not addressed in this procedure. This test method is not meant to provide a complete assessment of pavement surface texture characteristics.

5.3 The pavement macrotexture depth values measured by this test method, with the equipment and procedures stated herein, do not necessarily agree or correlate directly with other techniques of surface texture measurements. This test method is also suitable for research and development purposes, where direct comparisons between pavement surfaces are to be made within the same test program.

NOTE 2—The pavement surface to be measured using this test method must be dry and free of any construction residue, surface debris, and loose aggregate particles that would be displaced or removed during normal environmental and traffic conditions.

6. Materials and Apparatus

6.1 The essential elements of the apparatus, shown in Fig. 1, consist of the following material and equipment:

6.1.1 *Material*[4]—Solid glass spheres having 90 % roundness in accordance with Test Method D 1155. The spheres shall be graded to have a minimum of 90 % by weight passing a No. 60 sieve and retained on a No. 80 sieve[5].

6.1.2 *Sample Container*—A cylindrical metal or plastic container with a predetermined internal volume of at least 1.5 cubic in. (25 000 mm^3) shall be used to determine the volume of sand spread.

6.1.3 *Spreader Tool*—A flat, hard disc approximately 1 in. (25 mm) thick and 2.5 to 3.0 in. (60 to 75 mm) in diameter shall be used to spread the sand. The bottom surface or face of the disc shall be covered with a hard rubber material and a suitable handle may be attached to the top surface of the disc.

NOTE 3—An ice hockey puck is considered suitable for use as the hard rubber material in this test method.

6.1.4 *Brushes*—A stiff wire brush and a soft bristle brush shall be used to clean thoroughly the pavement surface prior to application of the material sample.

6.1.5 *Wind Screen*—A suitable screen or shield shall be placed on the pavement surface to protect the material sample from the wind and turbulence created by traffic. An example is shown in Fig. 1.

6.1.6 *Scale*—A standard scale 12 in. (305-mm) or greater in length and having 0.1-in. (2.5-mm) or 1-mm (0.04-in.) divisions should be used.

6.2 Use of a laboratory balance, sensitive to 0.1 g, is recommended with this test method to provide additional control and to ensure that the amount of material used for each surface macrotexture depth measurement is equal in both mass and volume.

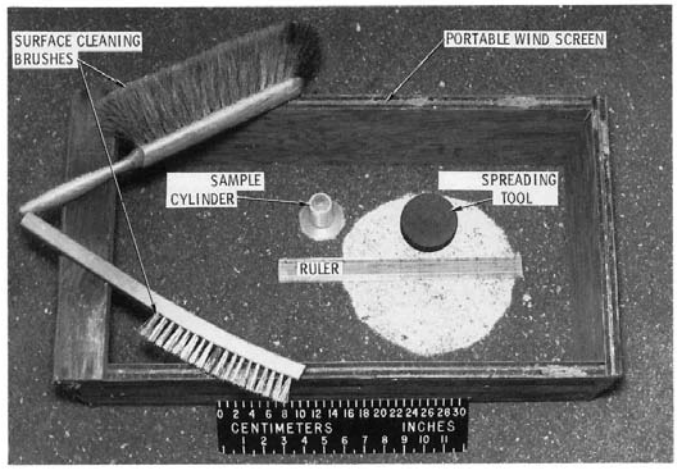

FIG. 1 Apparatus for Measuring Surface Macrotexture Depth

7. Procedure

7.1 *Test Area*—Inspect the pavement surface to be measured and select a dry, homogeneous area that contains no unique, localized features such as cracks and joints. Thoroughly clean the surface using the stiff wire brush first and subsequently the soft bristle brush to remove any residue, debris, or loosely bonded aggregate particles from the surface. Position the portable wind screen around the surface test area.

7.2 *Material Sample*—Fill the cylinder of known volume with dry material and gently tap the base of the cylinder several times on a rigid surface. Add more material to fill the cylinder to the top, and level with a straightedge. If a laboratory balance is available, determine the mass of material in the cylinder and use this mass of material sample for each measurement.

7.3 *Test Measurement*—Pour the measured volume or weight of material onto the cleaned surface within the area protected by the wind screen. Carefully spread the material into a circular patch with the disk tool, rubber-covered side down, filling the surface voids flush with the aggregate particle tips. Measure and record the diameter of the circular area covered by the material at a minimum of four equally spaced locations around the sample circumference. Compute and record the average diameter.

NOTE 4—For very smooth pavement surfaces where the patch diameters are greater than 12 in. (305 mm), it is recommended that half the normal volume of material be used.

7.4 *Number of Test Measurements*—The same operator should perform at least four, randomly-spaced measurements of average macrotexture depth on a given test pavement surface type. The arithmetic average of the individual macrotexture depth values shall be considered to be the average macrotexture depth of the test pavement surface.

8. Calculation

8.1 *Cylinder Volume*—Calculate the internal volume of the sample cylinder as follows:

[4] Historically Ottawa natural silica sand was used for this test method. Glass spheres have been found to provide an equivalent measurement but with greater precision, both within laboratory and between laboratories. An additional motivation to use glass spheres is the difficulty of preparing Ottawa sand meeting the gradation requirements of passing a No. 50 sieve and retained on a No. 100 sieve. Manual sieving is necessary and is time consuming producing low yields of usable material from most sources of sand. However, when sand meeting the gradation requirements is used, the resulting texture depth approximates that obtained with glass spheres.

[5] Commercially available material may be used, but must be graded and tested for roundness to assure that they conform to this test method.

Copyright by ASTM Int'l (all rights reserved); Mon Dec 8 11:45:48 EST 2008
Downloaded/printed by
Keith Johnston (Oregon Dept Of Transportation) pursuant to License Agreement. No further reproductions authorized.

$$V = \frac{\pi d^2 h}{4} \quad (1)$$

where:
V = internal cylinder volume, in.^{3} (mm^3),
d = internal cylinder diameter, in. (mm), and
h = cylinder height, in. (mm).

8.2 *Average Pavement Macrotexture Depth*—Calculate the average pavement macrotexture depth using the following equation:

$$MTD = \frac{4V}{\pi D^2} \quad (2)$$

where:
MTD = mean texture depth of pavement macrotexture, in. (mm),
V = sample volume, in.^{3} (mm^3), and
D = average diameter of the area covered by the material, in. (mm).

9. Faulty Tests

9.1 Tests that are manifestly faulty or that give mean texture depth values differing by more than 0.005 in. (0.13 mm) from the average of all tests on the same pavement surface shall be treated in accordance with Practice E 178.

10. Report

10.1 The report for each pavement test surface shall contain data on the following items:

10.1.1 Location and identification of test pavement surface,

10.1.2 Date,

10.1.3 Volume of material used for each test measurement, in.^{3}(mm^3),

10.1.4 Number of test measurements,

10.1.5 Average diameter of the area covered by the material, in. (mm), for each test,

10.1.6 Mean texture depth, in. (mm), for each test, and

10.1.7 Mean texture depth, in. (mm), for total pavement test surface.

11. Precision and Bias

11.1 Analysis of macrotexture depth data collected during extensively controlled tests[6] produced estimates of the repeatability (method precision) and reproducibility (applied precision) of the volumetric method, as well as sampling errors that can be expected in measuring the average texture depths of a pavement section by the method. The controlled tests were conducted on laboratory specimens having a range of macrotexture depth of 0.02 to 0.047 in. (0.508 to 1.2 mm). The macrotexture depth precision estimates are expressed as a percentage, such as the ratio of the standard deviation of the texture measurements to the mean texture depth multiplied by 100.

11.2 The standard deviation of the repeated measurements by the same operator on the same surface can be as low as 1 % of the average texture depth.

11.3 The standard deviation of the repeated measurements by different operators on the surface can be as low as 2 % of the average texture depth.

NOTE 5—The standard deviation of the site-to-site measurements may be as large as 27 % of the average texture depth. Here site defines a randomly selected location within a nominally homogeneous pavement section. This means that a large number of measurement observations would be necessary to estimate the average texture depth reliably for given pavement types with large variations in texture, despite the fact that the method is highly repeatable and not subject to large operational influences.

[6] Supporting data are available from ASTM Headquarters Request Research Report: RR:E17-1001.

REFERENCES

(1) Yager, T. J., and Buhlmann, F., "Macrotexture and Drainage Measurements on a Variety of Concrete and Asphalt Surfaces," *ASTM STP 763,* ASTM, 1982.

(2) American Concrete Paving Association, "Guideline for Texturing of Portland Cement Concrete Highway Pavements," *Technical Bulletin No. 19*, March 1975.

(3) Hegmon, R. R., and Mizoguchi, M.," Pavement Texture Measurement by the Sand Patch and Outflow Meter Methods," *Automotive Safety Research Program, Report No. S40, Study No. 67-11*, Pennsylvania State University, January 1970.

(4) Dahir, S. H., and Lentz, H. J., "Laboratory Evaluation of Pavement Surface Texture Characteristics in Relation to Skid Resistance," *Federal Highway Administration Report No. FHWA-RD-75-60*, June 1972.

(5) Rose, J. G. et al., "Summary and Analysis of the Attributes of Methods of Surface Texture Measurements," *ASTM STP 53*, ASTM, June 1972.

ASTM International takes no position respecting the validity of any patent rights asserted in connection with any item mentioned in this standard. Users of this standard are expressly advised that determination of the validity of any such patent rights, and the risk of infringement of such rights, are entirely their own responsibility.

This standard is subject to revision at any time by the responsible technical committee and must be reviewed every five years and if not revised, either reapproved or withdrawn. Your comments are invited either for revision of this standard or for additional standards and should be addressed to ASTM International Headquarters. Your comments will receive careful consideration at a meeting of the responsible technical committee, which you may attend. If you feel that your comments have not received a fair hearing you should make your views known to the ASTM Committee on Standards, at the address shown below.

This standard is copyrighted by ASTM International, 100 Barr Harbor Drive, PO Box C700, West Conshohocken, PA 19428-2959, United States. Individual reprints (single or multiple copies) of this standard may be obtained by contacting ASTM at the above address or at 610-832-9585 (phone), 610-832-9555 (fax), or service@astm.org (e-mail); or through the ASTM website (www.astm.org).

Copyright by ASTM Int'l (all rights reserved); Mon Dec 8 11:45:48 EST 2008
Downloaded/printed by
Keith Johnston (Oregon Dept Of Transportation) pursuant to License Agreement. No further reproductions authorized.

MC Overlay
00559

Deck Prep

Hydroblast Deck Prep

Surface After Hydroblast

Surface After Hydroblast

Class 2 Repair

Sealed Large Cracks

Soak Deck 8 Hours Prior To Pour

Plastic To Keep Deck Clean

Brooming Grout

Placing Mix

Deck Machine

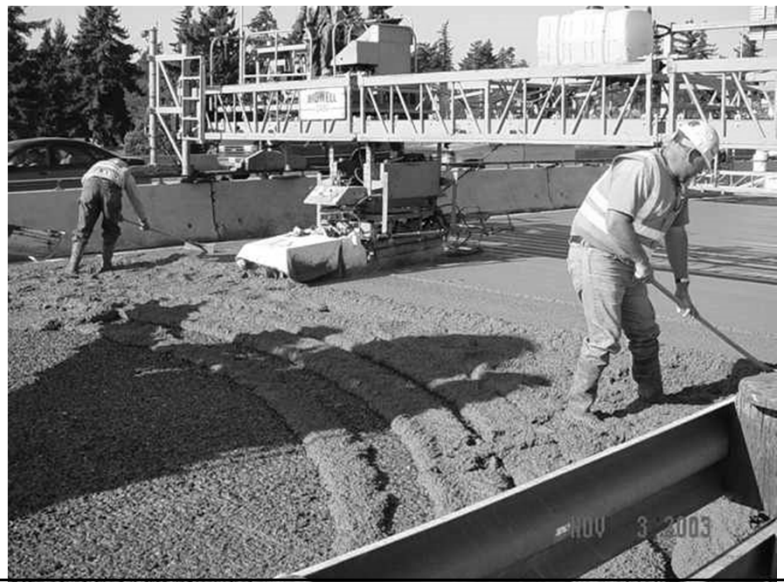

Look For Clumps In Mix

Deck Machine

Deck Machine

Cure Fabric

Cure Fabric

Deck Cure

Bond Test

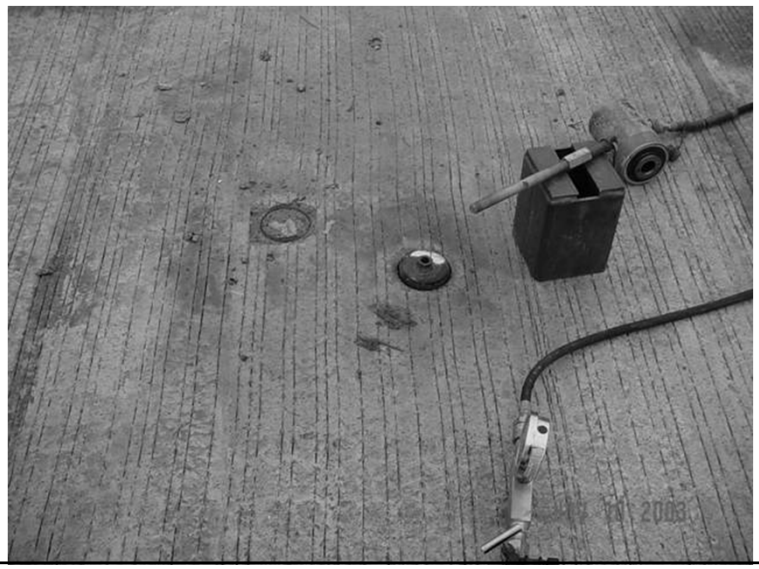

Bond Test

Bond Test

Spray Waterproofing Membrane SP00591

Bridge Preservation System Methacrylate Prime Coat

Bond Test On Prime Coat

Polyurea Layer

2nd Polyurea Layer (If required)

Rock Broadcast Before Set

Polycarb System Bottom Layer of Epoxy

Polyurea Layer

Polyurea Layer

Top Layer of Epoxy

Rock To Refusal On Epoxy Layer

Hot Tack & Pave

Premixed Polymer Concrete Overlay (SP00557) (Polyester Polymer Concrete)

Methacrylate Layer

Slip Form Paver

PPC Placement

Hand Finishing End

Completed End

Angled Edge For Traffic

Spreading Sand On Top

Multi-layer Polymer Concrete Overlay (SP00556)

Shotblasted Surface

Spreading Flexolith

Blowing #8 Basalt On Top

Completed Lane

View FHWA Video

Bridge Deck Construction Review

BID-WELL
A DIVISION OF CMI CORPORATION

P.O. BOX 97
CANTON, SOUTH DAKOTA 57013
AREA CODE 605 PHONE 987-2603
TELEX 295001

ROLLER PAVER SET-UP INSTRUCTIONS

(To Be Used With Manual)

FOR ADDITIONAL HELP CALL BID-WELL (605)987-2603

⚠ CAUTION:

1. Put safety first - read operators manual.
2. Assemble machine with all cross braces and safety shields - consult owners manual for safe lifting.
3. Clear machine of all personnel before starting and operating.
4. Stop engines before cleaning machine.
5. Never take safety for granted.

BID-WELL TRUSS ASSEMBLY
FIG. 1

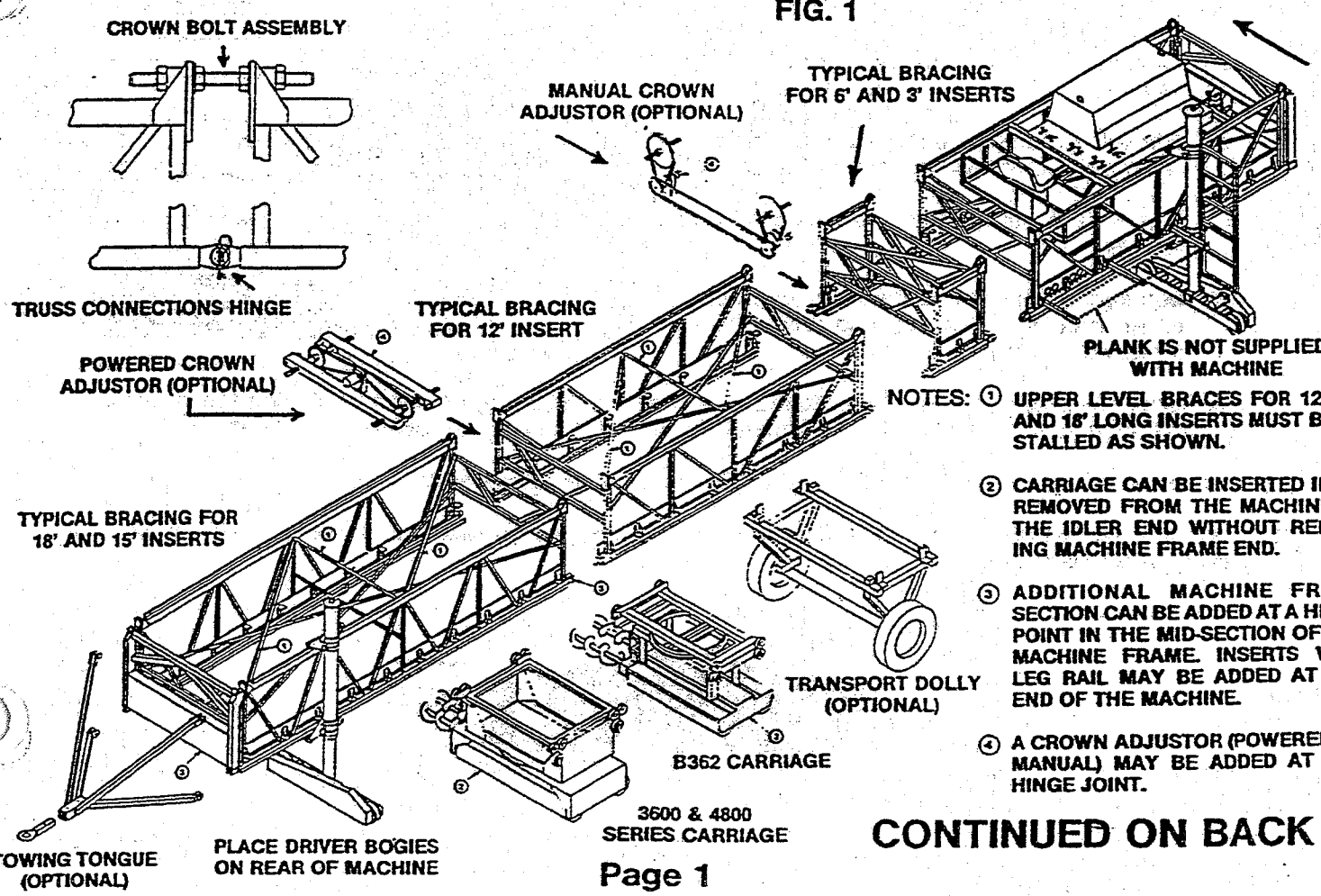

NOTES: ① UPPER LEVEL BRACES FOR 12', AND 18' LONG INSERTS MUST BE STALLED AS SHOWN.

② CARRIAGE CAN BE INSERTED IN REMOVED FROM THE MACHINE THE IDLER END WITHOUT REM ING MACHINE FRAME END.

③ ADDITIONAL MACHINE FRA SECTION CAN BE ADDED AT A HI POINT IN THE MID-SECTION OF MACHINE FRAME. INSERTS W LEG RAIL MAY BE ADDED AT END OF THE MACHINE.

④ A CROWN ADJUSTOR (POWERED MANUAL) MAY BE ADDED AT HINGE JOINT.

CONTINUED ON BACK

MACHINE SET-UP AND ALIGNMENT PROCEDURES

NOTE: MACHINE SHOULD BE ASSEMBLED ON GROUND BEFORE PLACING ON DECK

1. Assemble machine to fit job requirements - refer to diagram on page 1.
2. Install carriage and position at center of machine.
3. Mount bogies on legs - with drive bogies on rear.
4. Position legs to fit screed rails with hinge point over crown (see step 10.)
5. Consult owners manual for safe lift procedures, then lift and place machine on screed rails.
6. Remove truss frame twist with leg cranks.
7. Set carriage rails to the same relative mid-adjustor position at all corners and hinge points. Use carriage rail adjuster.
8. Set a stringline over the carriage rail above carriage wheels and adjust crown bolts at truss hinge points to straighten and align machine frame. (Fig. 2 & Fig. 1)

⚠CAUTION: COMPENSATE FOR STRING SAG - DO NOT USE PIANO WIRE.

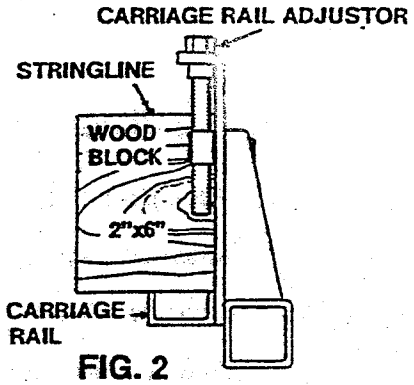

FIG. 2

9. Adjust carriage rail to stringline with adjustors. (Fig. 2). Set finishing rollers parallel to the carriage rails and to each other. (Fig. 3)
   A) Check and tighten turntable pivot nut to maintain contact at all four slide blocks.
   B) Stretch a stringline across top of carriage rail from front to rear on each side of carriage.
   C) Place a 4 ft. straight edge across ends of both rollers.
   D) Measure down from stringline to top of straight edge at all four corners and adjust to same distance.

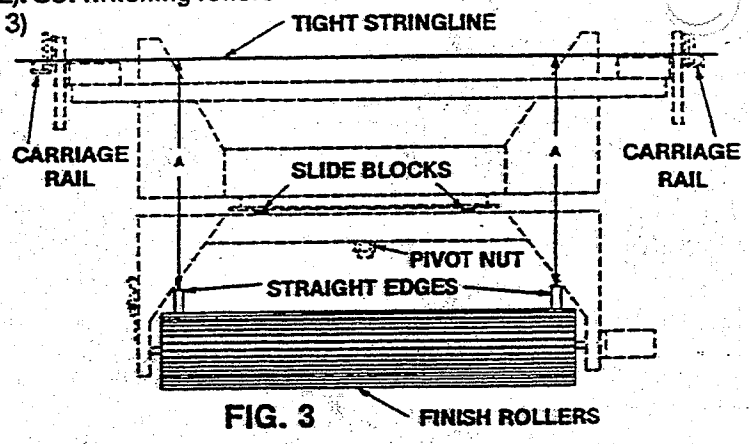

FIG. 3

10. Set crown by placing truss hinge point over crown and adjust by opening or closing top crown bolt. Consult owners manual for safe lift procedures, then lift and place machine on screed rails.
11. Attach reversing lugs to carriage travel chain for suitable paving width.
12. Attach roller reversing push rod activator plates to carriage rail - two inches inside maximum carriage travel width on each side.

BIDWELL
A DIVISION OF CMI CORPORATION

BIDWELL
A DIVISION OF CMI CORPORATION
P.O. BOX 97
CANTON, SOUTH DAKOTA 57013
AREA CODE 605 PHONE 987-2603
TELEX 295001

ROLLER PAVER OPERATING INSTRUCTIONS

NORMAL MACHINE OPERATION

1. Carriage travel direction automatically reverses at the end of each carriage pass.
2. Finish rollers automatically reverse rotation and skew slightly at the end of each carriage pass.
3. Machine automatically travels forward a preset distance at the end of each carriage pass.

FINAL GRADING ADJUSTMENTS

1. Set front and rear ends of finish rollers to final grade using leg cranks.

   EXAMPLES:

   A) Grade to a bulkhead, end dam or expansion joint.

2. Set augers approximately 1/8 to 1/4 inch above grade of rollers. Use crank with pin lock.
3. Dry run machine from end to end of pour to preload falsework and check bulkheads.

   A) Match grade of bulkheads and end dams by feathering screed rails, but do not change machine leg cranks.

FINAL PAVING ADJUSTMENTS

1. Set rear end of finish rollers approximately 1/8 to 3/16 inches above front end by raising rear of machine 3/4 to 1 turn of leg crank.
2. Augers may need to be readjusted during the pour, to maintain a golf ball size roll of concrete at the front of rollers, which should feather out no more than half way back.
3. Rear leg setting may need to be readjusted at either side, during the pour, so rear of roller is just touching the concrete without leaving a mark.
4. Drag pans are attached to pull in either direction. Adjust to obtain a slight leading edge rise.
5. Astro turf or burlap drag may be attached and adjusted to give surface texture.

CONTINUED ON BACK

CAUTION: Before starting machine, all safety shields to be in place, set all controls to off or stop position, and clear all personnel from machine.

TO START ENGINES

1) Set power selector level to 'stop'
2) Start engine and allow for warm-up
3) Set engine to operating speed

TO TRAVEL MACHINE

1) Set machine travel direction control levers to direction needed
2) Set power selector lever to machine travel
3) Use machine travel speed lever to start, travel and stop machine

TO PAVE - CARRIAGE SETTINGS

1) Set power lever at end of carriage to 'run'
2) Set finish roller rotation direction with valves on rear of carriage so both rollers rotate up into concrete on each pass.

TO PAVE - CONTROL CONSOLE SETTINGS

1) Set machine travel direction control levers
2) Start carriage travel, by moving power selector lever to 'pave'
3) Select automatic machine advance distance with machine travel speed control

TO MANUALLY REVERSE CARRIAGE TRAVEL

1) Slowly move power selector lever to 'stop'
2) Shift carriage travel reversing lever in direction of travel required
3) Slowly move power selector lever back to 'pave'

TO STOP AUTOMATIC FINISH ROLLER REVERSING

1) Pull valve knob out on side of carriage
2) Set finish roller rotation in desired direction with valves mounted on rear of carriage (for Model 362, change quick disconnect hoses)

TO STOP AUTOMATIC SKEWING OF FINISH ROLLERS

1) Disconnect skew cylinder by removing mounting pin and secure skew ring clamps.

BID-WELL
A DIVISION OF CMI CORPORATION
CMI CORPORATION OKLA. CITY, USA
P.O. BOX 97
CANTON, SOUTH DAKOTA 57013
AREA CODE 605 PHONE 987-2603
TELEX 295001

ROL-A-TAMP SET UP INSTRUCTIONS

(To Be Used With Manual)

FOR ADDITIONAL HELP CALL BID-WELL (605)987-2603)

⚠ CAUTION:

1. Put safety first - read operators manual.
2. Assemble machine with all cross braces and safety shields - consult owners manual for safe lifting.
3. Clear machine of all personnel before starting and operating.
4. Stop engines before cleaning machine.
5. Never take safety for granted.

SPECIFICATIONS FOR BID-WELL ROL-A-TAMP

The BID-WELL Rol-A-Tamp finishing attachment provides a means of achieving a more uniform concrete surface with desired density. This facilitates sealing difficult to finish concrete, due to harsh mix designs, low slump specifications, wind exposure causing abnormal surface drying and unforseen and unpredictable delays.

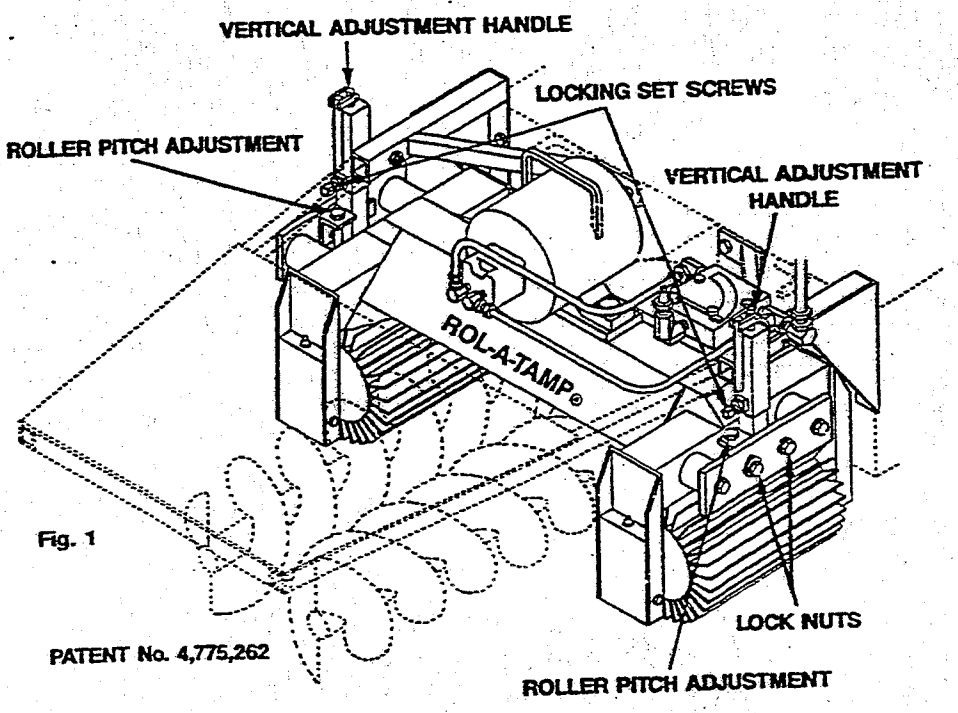

Fig. 1

PATENT No. 4,775,262

CONTINUED ON BAC

ROL-A-TAMP SET-UP AND ALIGNMENT PROCEDURES

The Rol-A-Tamp's finned rollers are vertically adjustable from 1/2 inch above concrete grade to 1/8 inch below concrete grade. The depth of penetration can be varied, according to job requirements. A 1/8 inch penetration will normally yield good results.

1. Place a four foot level under the finishing rollers and under the Rol-A-Tamp. Refer to fig. 2.
2. Loosen locking set screws. Refer to fig. 1
3. Loosen lock nuts for the roller pitch adjustment. Refer to fig.1
4. Set the front of the rollers approximately 1/8 of an inch higher than the rear of the rollers, by using the pitch adjustment. Refer to fig. 1
5. Pitching the front end of the finned rollers up 1/8 to 1/4 of an inch allows the Rol-A-Tamp to become parallel to the concrete surface, when the rear of the machine is raised using the rear leg cranks.
6. Lower the finned rollers by using the vertical adjustment handles. Refer to fig. 1
7. Set the finned rollers to 1/8 of an inch below the finishing rollers or desired depth. Refer to fig. 3. Maximum recommended depth 3/16".
8. Lock all set screws and lock nuts.
9. Run the vibrator at the speed that does the best job of keeping the fins of the rollers clean. (Do not exeed 5000 vibrations per minute, normally 3500-4500 VPMS is a good operating speed)

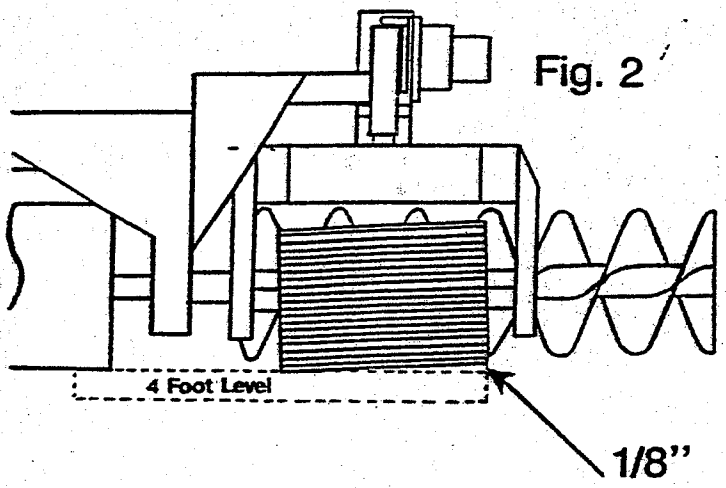

Fig. 2

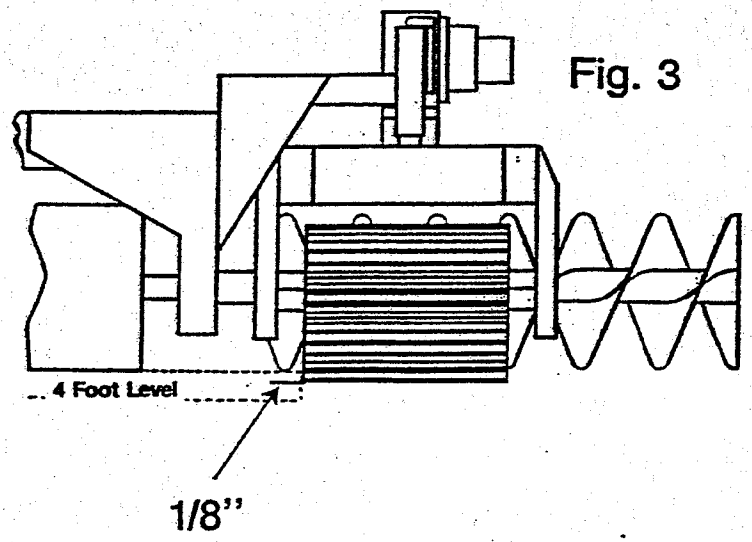

Fig. 3

BIDWELL
A DIVISION OF CMI CORPORATION