Appendices to the Highway Cost Allocation Study 2013-2015 Biennium

Prepared for
Oregon Department of
Administrative Services,
Office of Economic Analysis

ECONorthwest
ECONOMICS • FINANCE • PLANNING

222 SW Columbia Street
Suite 1600
Portland, Oregon 97201
503-222-6060
www.econw.com

with
R.D. Mingo & Associates,
Jack Faucett Associates,
HDR Engineering,
and Mark Ford

Oregon Highway Cost Allocation Study

2013-2015 Biennium

Appendix A: Glossary of Highway Cost Allocation Terms A-1

Appendix B: Issue Papers B-1

Appendix C: Meeting Minutes C-1

Appendix D: Oregon Highway Cost Allocation Study Model User Guide D-1

Appendix E: 2013 HCAS Model Documentation E-1

Appendix A

Glossary of Highway Cost Allocation Terms

List of Acronyms

AAA	American Automobile Association
AMT	Axle Miles of Travel
ATR	Automatic Traffic Recorder
DAS	Department of Administrative Services
DL	Dead Load
DMV	Division of Motor Vehicles
ESAL	Equivalent Single Axle Load
FHWA	Federal Highway Administration
HCAS	Highway Cost Allocation Study
HPMS	Highway Performance Monitoring System
LL	Live Load
MCTD	Motor Carrier Transportation Division
NAPCOM	National Pavement Cost Model
NAPHCAS	National Pavement Model for Highway Cost Allocation
ODOT	Oregon Department of Transportation
OHCAS	Oregon Highway Cost Allocation Study
OTIA	Oregon Transportation Investment Act
PCE	Passenger Car Equivalent
SRT	Study Review Team
VMT	Vehicle Miles of Travel
WIM	Weigh-In-Motion

Definitions

Alternative Fee A fee charged to some vehicles in place of the usual fee (e.g., a lower registration fee for publicly owned vehicles).

Arterial A road or highway used primarily for through traffic.

Attributable Costs Costs that are a function of vehicle size, weight, or other operating characteristics and can therefore be attributed to vehicle classes based on those characteristics.

Axle Miles of Travel (AMT) Vehicle miles of travel multiplied by number of axles. Because trucks, on average, have roughly twice as many axles as cars (i.e., four versus two), their share of the total axle miles of travel on any given highway system will be about double their share of the vehicle miles of travel on that system.

Axle Weight or Axle Load The gross load carried by an axle. In Oregon, 20,000 pounds is the legal maximum for a single axle and 34,000 pounds is the legal maximum for a tandem (double) axle.

Benefits Things that make people better off, or the value of such things.

Collector A road that connects local roads with arterial roads.

Common Costs Expenditures that are independent of vehicle size, weight, or other operating characteristics and so cannot be attributed to any specific class of vehicles. These expenditures must therefore be treated as a common responsibility of all vehicle classes and are most typically assigned to all classes on the basis of a relative measure of use, such as vehicle miles of travel.

Cost Allocation The analytical process of determining the cost responsibility of highway system users.

Cost-Occasioned Approach An approach that determines responsibility for highway expenditures/costs based on the costs occasioned or caused by each vehicle class. Such an approach is not based solely on relative use, nor does it attempt to quantify the benefits received by different classes of road users.

Cost Responsibility The principle that those who use the public roads should pay for them and, more specifically, that payments from road users should be in proportion to the road costs for which they are responsible. The proportionate share of highway costs legitimately assignable to a given vehicle type user group.

Cost-Based Approach An approach in which the dollars allocated to the vehicle classes are measures of the costs imposed during the study period, rather than expenditures made during the study period. The difference between the cost-based and expenditure-based approaches is most evident when considering large investments in long-lived structures and when deferred maintenance moves the expenditures associated with one period's use into another period.

Cross-Subsidization A condition where some vehicles are overpaying and others are underpaying relative to their respective responsibilities.

Dead Load The load on a bridge when it is empty.

Debt Financing Funding current activities by issuing debt to be repaid in the future.

Debt Service Funds used for the repayment of previously incurred debt (both principal and interest).

Deck The roadway or surface of a bridge.

Declared Weight In Oregon, vehicles choose a declared weight and pay the weight-mile tax based on that weight. They may not exceed that weight while operating without obtaining a special trip permit. For tractor-trailer combinations, a single tractor may have multiple declared weights, one for each configuration it expects to be a part of.

Depreciation The amount of decrease in value of a physical asset due to aging in a time period.

Efficiency The degree to which potential benefits are realized for a given expenditure.

Efficient Pricing Setting prices for the use of highway facilities so that each vehicle pays the costs it imposes at the time and place it is traveling. Efficient pricing promotes the most efficient use of existing facilities and

generates the right amount of revenue to build the most efficient system and perform the optimal amount of maintenance.

Equity Generally interpreted as the state of being just, impartial, or fair. Horizontal equity refers to the fair treatment of individuals with similar circumstances. Vertical equity refers to the fair treatment of individuals in different circumstances.

Equity Ratio The ratio of the share of revenues paid by a highway user group to the share of costs imposed by that group.

Equivalent Single Axle Load (ESAL) The pavement stress imposed by a single axle with an 18,000-pound axle load. ESAL-miles are equivalent single-axle loads times miles traveled. Research has concluded that the relationship between axle weight and ESALs is an approximate third- or fourth-power exponential relationship; ESALs therefore rise rapidly with increases in axle weight.

Excise Tax A tax levied on the production or sale of a specific item such as gasoline, diesel fuel, or vehicles.

Expenditure The amount of money spent in a time period.

External Cost A cost imposed on individuals who do not use the facility.

Federal Highway Funds Funds collected from federal highway user fees and distributed to states by the Federal Highway Administration for spending on transportation projects by state and local governments.

Functional Classification The classification of roads according to their general use, character, or relative importance. Definitions are provided by the Federal Highway Administration for Rural Interstate, Rural Other Principal Arterial, Rural Minor Arterial, Rural Major Collector, Rural Minor Collector, Rural Local, Urban Interstate, Urban Other Expressway, Urban Other Principal Arterial, Urban Minor Arterial, Urban Collector, and Urban Local.

Fungibility The relative ability to use funds from different sources for the same purposes. Funds from some sources carry restrictions on how they may be spent; to the extent that those funds free up unrestricted funds that would otherwise be spent that way, they may be considered fungible with the unrestricted funds.

Gross Vehicle Weight The maximum loaded weight for a vehicle.

Heavy Vehicles All vehicles weighing more than the upper limit in the definition of a light (basic) vehicle (see light vehicle). Includes trucks, buses, and other vehicles weighing 10,001 pounds or more.

Highway Cost Allocation Study (HCAS) A study that estimates and compares the costs imposed and the revenues paid by different classes of vehicles over some time period.

Highway Performance Monitoring System (HPMS) The Federal Highway Administration collects and reports data about a sample of road segments in every state in a common format.

Highway User A person responsible for the operation of a motor vehicle in use on highways, roads, and streets. In the case of passenger vehicles, the users are the people in the vehicles. In the case of goods-transporting trucks, the user is the entity transporting the goods.

Incremental Cost The additional costs associated with building a facility to handle an additional, heavier (or larger) class of vehicle.

Incremental Method A method of assigning responsibility for highway costs by comparing the costs of constructing and maintaining facilities for the lightest class of vehicles only and for each increment of larger and heavier vehicles. Under this method, vehicles share the incremental cost of a facility designed to accommodate that class as well as the cost of each lower increment.

Light (or Basic) Vehicles The lightest vehicle class, usually including passenger cars. In Oregon, the current definition of Light Vehicles includes vehicles up to 10,000 pounds, which account for more than 90 percent of the total vehicle miles of travel on Oregon roads.

Live Load The additional load on a structure by traffic (beyond the load imposed by holding itself up).

Load-Related Costs Costs that vary with the load imposed by traffic on a facility.

Marginal Cost The increase in total cost that results from producing one additional unit of output. With respect to highway use, the marginal cost is the increase in total highway costs that results from one additional vehicle trip. Economic efficiency is achieved when the price charged to the user is equal to the marginal cost.

National Highway System (NHS) A set of highways throughout the United States that have been designated as National Highways by the federal government. The Federal Highway Administration sets design and maintenance standards and provides funding for national highways, but the highways are owned by the states.

National Pavement Cost Model (NAPCOM) A model of pavement costs that incorporates the wear-and-tear costs imposed by vehicle traffic of different weights and configurations as well as deterioration from age and environmental factors, taking into account the soil type, road base depth, pavement material, pavement thickness, and climate zone.

Non-Divisible Load Large pieces of equipment or materials that cannot be feasibly divided into smaller individual shipments. All states issue special permits for non-divisible loads that would otherwise violate state and federal gross vehicle weight, axle weight, and bridge formula limits.

Operating Weight The actual weight of a vehicle at a particular time.

Overhead Costs Costs that vary in proportion to the overall level of construction and maintenance activities but are not directly associated with specific projects.

Passenger Car Equivalent (PCE) A measure of road space effectively occupied by a vehicle of a given type under given terrain, vehicle mix, road type, and congestion conditions. The reference unit is the standard passenger car operating under the conditions on the road category in question.

Registered Weight The weight that determines the registration fee paid by a single-unit truck or a tractor. For a tractor, it is typically the highest of that vehicle's declared weights.

Revenue Attribution The process of associating revenue amounts with the classes of vehicles that produce the revenues.

Right of Way The strip of land, property, or interest therein, over which a highway or roadway is built.

Road Use Assessment Fee In Oregon, vehicles carrying non-divisible loads over 98,000 pounds on special permit pay a fee based on the number of ESAL-miles for the trip (see Equivalent Single-Axle Load).

Social (or Indirect) Costs Costs that highway users impose on other users or on non-users. Costs typically included in this category are those associated with noise, air and water pollution, traffic congestion, and injury and property damage due to traffic accidents.

Span A section of a bridge.

State Highway System Roads under the jurisdiction of the Oregon Department of Transportation.

Studded Tire A tire with metal studs imbedded in its tread for better traction on icy roads.

Tax Avoidance The legal avoidance of a tax or fee.

Tax Evasion The illegal failure to pay a tax or fee.

Truck A general term denoting a motor vehicle designed for transportation of goods. The term includes single-unit trucks and truck combinations.

User Charge A fee, tax, or charge that is imposed on facility users as a condition of usage.

User Revenues Highway revenues raised through the imposition of user charges or fees.

Value Pricing Prices set in proportion to the benefits received, rather than the cost of production.

Vehicle Class Any grouping of vehicles having similar characteristics for cost allocation, taxation, or other purposes. The number of vehicle classes used in a cost responsibility (allocation) study will depend on the needs, purpose, and resources of the study. Since the Oregon weight-mile tax rates are graduated in 2,000-pound

increments, the Oregon studies have traditionally divided heavy vehicles into 2,000-pound gross weight classes. Light (basic) vehicles are considered as one class in the Oregon studies. Potential distinguishing characteristics include weight, size, number of axles, type of fuel, time of operation, and place of operation.

Vehicle Miles of Travel (VMT) The sum over vehicles of the number of miles each vehicle travels within a time period.

Vehicle Registration Fees Fees charged for being allowed to operate a vehicle on public roads.

Weight-Mile Tax In Oregon, commercial vehicles over 26,000 pounds pay a user fee based on the number of miles traveled on public roads within Oregon. The per-mile rate is based on the declared weight of the vehicle, and for vehicles weighing over 80,000 pounds, the number of axles. Vehicles paying the weight-mile tax are exempt from the use-fuel (diesel) tax.

Issue Paper 1:

Current Issues in Pavement Cost Allocation

Roger Mingo, Roger Mingo and Associates

1.0 Introduction

The National Pavement Cost Model (NAPCOM), used in all recent Oregon Highway Cost Responsibility Studies as it has evolved, first emerged from the pavement distress models developed for the 1982 Federal Highway Cost Allocation Study (HCAS). From its inception, NAPCOM has strived to accurately describe how pavement costs vary as a function of vehicle use. To that end, it has always tried to include and incorporate the most proven and accepted pavement damage models and theories.

Before the 1982 Federal HCAS, highway cost allocation studies had used the results of the 1950's-era AASHO Road Test to determine the relative responsibility of vehicle classes for pavement costs. The Road Test had subjected thin pavement sections to repeated applications of axles of various weights and had originated the concept of "Equivalent Single Axle Loads (ESALs)"—measures of the relative impacts of axles of various weights that varied roughly with the fourth power of axle weight.

By the time of the 1979 to 1982 Federal study, advances in pavement engineering had increased the awareness that pavement deterioration was much more complex than could be expressed by a single measure. Pavement deterioration could be measured by various "distresses" (such as rutting, transverse cracking, or roughness). Some of these distresses might vary with the fourth power of axle weight while others might vary with only the first or second power.

Further, the trucking industry was well aware that a fourth power assumption might severely overcharge them if used to allocate pavement cost responsibility. As a result of the high visibility and potential high stakes in making assumptions about pavement deterioration, the Federal Highway Administration (FHWA) devoted considerable effort to incorporating the best then-available knowledge in more precisely quantifying pavement cost responsibility, and developed a set of empirically based pavement performance models for estimating cost responsibilities.

The 1982 models were updated later in the 1980s with the initial development of NAPCOM. For their 1995 HCAS, FHWA updated several of the NAPCOM distress models using several mechanistic-empirical pavement damage equations that describe the relationship of axle loads and repetitions to pavement distresses.

The most recent version of NAPCOM includes newly developed distress equations and load equivalency factors (LEFs) based on AASHTO's Mechanistic-Empirical Pavement Design Guide (MEPDG) model. This latest version of NAPCOM has completely revised distress prediction equations and new LEF formulas that are completely independent of ESALs and the fourth-power assumption.

2.0 Improvements in NAPCOM

The latest version of NAPCOM deviates from earlier versions in several important ways: (1) for the first time, all LEFs are independent of ESALs, (2) all the distress and LEF equations in the model derive from the new MEPDG models, and (3) NAPCOM's new distress equations are calibrated to pavement distress data

collected by the states and reported to FHWA through the Highway Performance Monitoring System (HPMS).

In earlier versions of NAPCOM, flexible damage equations were expressed in terms of axle loads and types, but the rigid distress equations were expressed in terms of ESALs. The flexible models generally followed mechanistic pavement response theory while the rigid models were much more grounded in empirical data—essentially stuck on using ESALs. Since both sets of models now derive from MEPDG models, LEFs are no longer constrained by the fourth-power assumption. Our June 2010 paper on pavement issues for the last HCAS included an appendix with detailed information on how we developed the LEFs for each distress type of each type of pavement.

The newest version of NAPCOM uses pavement distress information now included in HPMS data. We could not use this feature of NAPCOM in the 2011 Oregon HCAS because most states, including Oregon, did not include the distress information until they submitted 2010 data in late 2011. Thus, we had to use anecdotal distress information in order to weight the relative importance of each pavement distress on each highway system. The added distress information will allow a more accurate estimation of the relative importance of each distress for each pavement type.

3.0 Comparison of Load Equivalence Factors (LEFs)

Previous versions of NAPCOM, used in the 2009 HCAS and in earlier studies, derived axle cost shares for each distress on each HPMS highway section, as well as an overall cost share weighted by the prevalence of each distress on each highway section. Cumulative cost shares combined the axle cost responsibilities for all highway sections of each pavement type on each highway system. LEFs were derived from the cumulative cost shares by distress type and for all distresses combined.

Each time we applied NAPCOM, we derived new LEFs that were a function of the characteristics of the set of all pavement sections included in the HPMS sample, as well as the traffic mix. Thus, LEFs in the 2007 study did not coincide exactly with LEFs derived in the 2009 study, for example.

The charts below plot LEFs for each type of axle on each pavement type in the 2007 and 2009 HCAS. In each chart, "Single F" denotes single-axle LEFs on flexible pavements, for example, and "Tandem R" denotes tandem-axle LEFs on rigid pavements. Note the x-axis label "Weight Per Axle Component (Kips)." In order to compare the relative effect of single, tandem, and tridem axles, we divided total tandem weight by two and tridem weight by three, thus displaying the average weight of each component axle. A 34,000 tandem, for example, has 17,000 pounds (or 17 kips) on each component axle.

Note the wide separation between single-, tandem-, and tridem-axle LEFs for flexible pavements derived in the 2007 study and the close spacing between the three axle types for rigid pavements. In contrast, the single and tandem flexible LEFs in 2009 practically coincided, while the rigid LEFs grew further apart than in 2007.

The version of NAPCOM used in the 2011 study used a completely different approach to driving LEFs, as described previously, and LEF patterns and results varied somewhat from earlier studies. Note that LEFs for flexible pavements vary more among the axle types than in previous studies.

LEFs for rigid pavements, in contrast, vary somewhat less among the pavement types. Further, LEFs for axles in the upper weight ranges are lower for grouped than for ungrouped arrangements, unlike in previous studies.

Note that the LEFs derived for the 2011 study were much closer to LEFs in previous studies for flexible pavements

than they were for rigid pavements. In addition, overall LEFs for both types of pavements had somewhat steeper curves in 2011 than they did in either 2007 or 2009.

Much of the reason for the higher slope derives from the mix and weighting of the distresses prevalent in each study. In the 2007 and 2009 studies, loss of skid resistance was given fairly large weighting, whereas the newer versions of NAPCOM do not even consider loss of skid resistance. Similarly, faulting has little overall effect in the newer versions of NAPCOM. LEFs for each of these distresses have much lower exponents than, say, cracking, so the net effect is a large increase in the overall LEF for a set of pavements.

Note, however, that the largest differences among LEFs occur at the very heaviest, fairly infrequently encountered axle weights. In fact, for rigid pavements, the most common axle weights have significantly lower LEFs than in earlier studies.

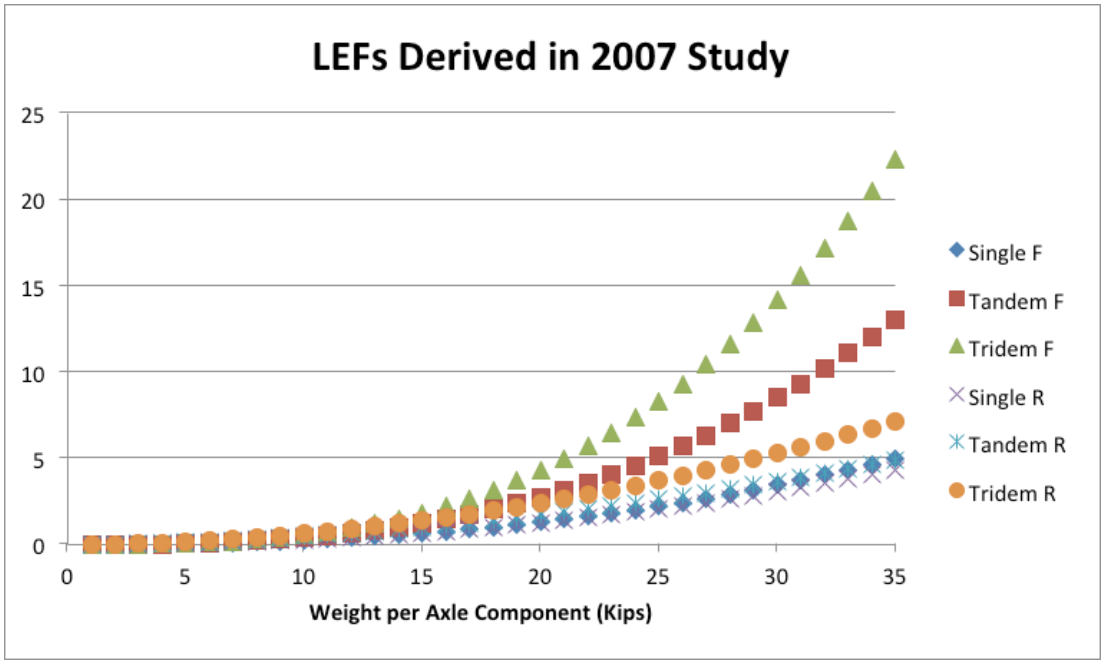

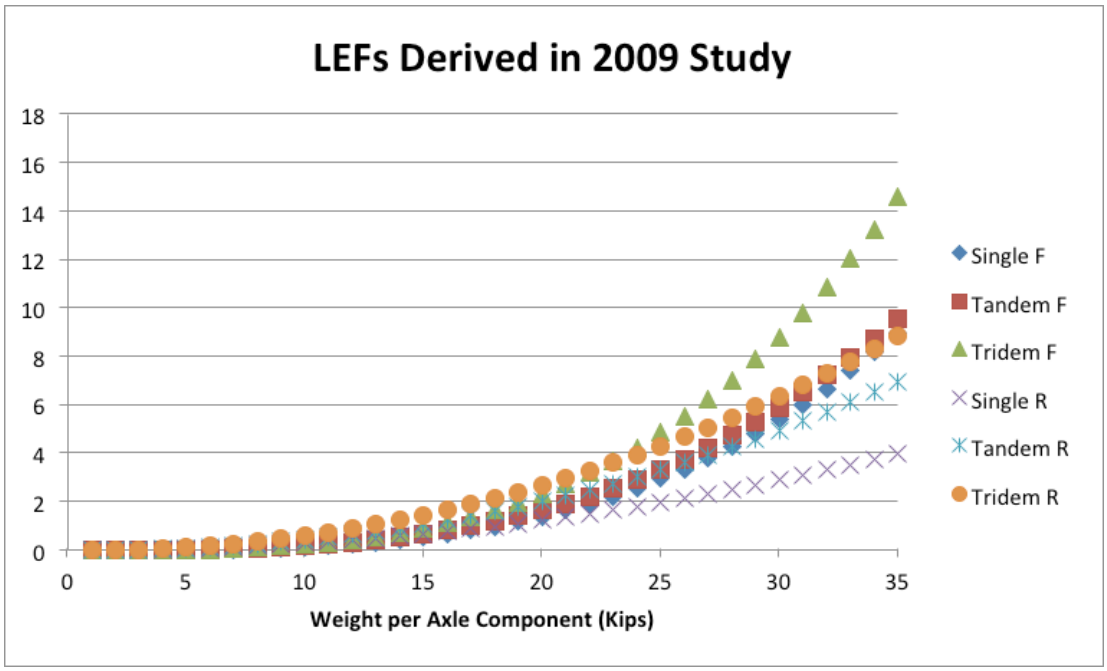
LEFs Derived in 2009 Study
18
16
14
12
10
8
6
4
2
0
0
5
10
15
20
25
30
35
Weight per Axle Component (Kips)
Single F
Tandem F
Tridem F
Single R
Tandem R
Tridem R

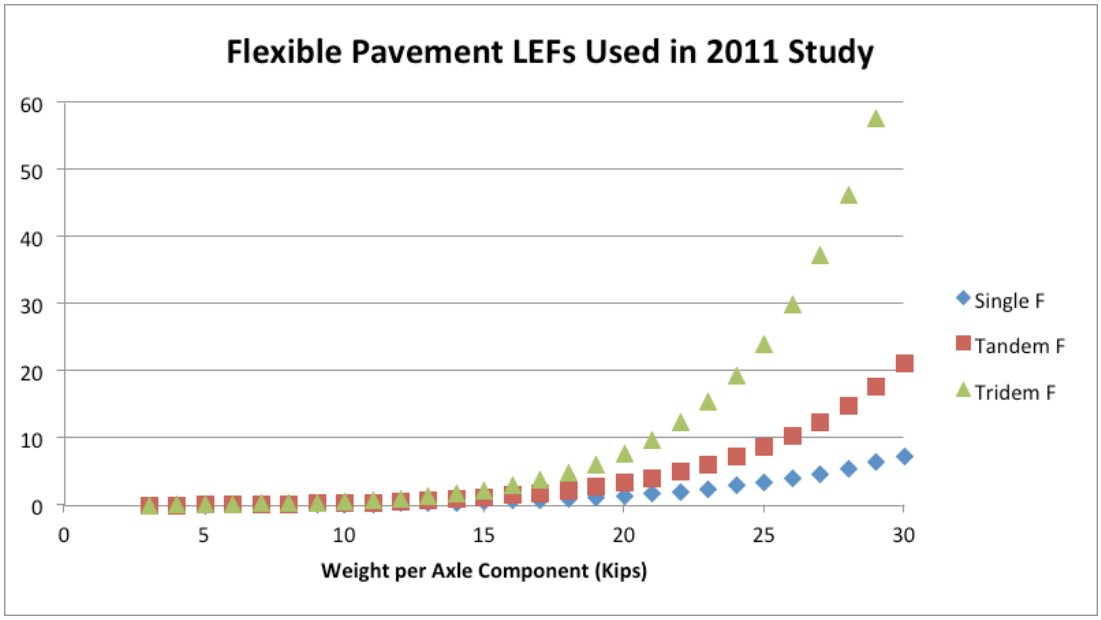
Flexible Pavement LEFs Used in 2011 Study
60
50
40
30
20
10
0
0
5
10
15
20
25
30
Weight per Axle Component (Kips)
Single F
Tandem F
Tridem F

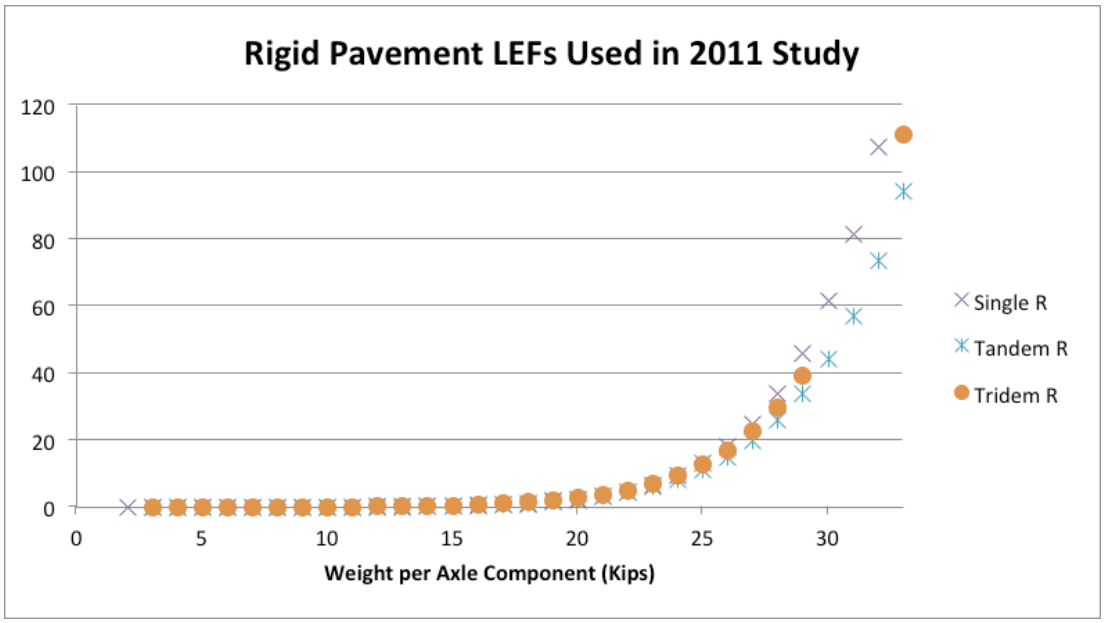

4.0 Comparison of Cost Responsibilities by Operating GVW

The steeper LEF curves derived in the 2011 HCAS reveal themselves in the pavement cost assignment results compiled by operating gross vehicle weight (GVW) and numbers of axles.

The 2009 HCAS grouped vehicles with 9 or more axles together, while the 2011 HCAS had separate categories for vehicles with up to 12 axles. Since vehicles with 10 and more axles are relatively rare, the data used to characterize these vehicles was rather sparse. Compare the graph above, showing raw results in 2009 with the two graphs below for 2011 (operating GVW were divided into two slightly overlapping ranges to better show the data).

Note that the unadjusted cost assignments are pretty well-behaved for vehicles weighing less than 90,000 pounds, at least the common ones, but exhibit wide scatter in the upper weight ranges. Results for rigid pavements are dramatically worse in the upper ranges in 2011, as shown in the following set of tables.

Because of the large amount of scatter, and because of the very small number of weigh-in-motion (WIM) observations, we opted to smooth the results to make them usable.

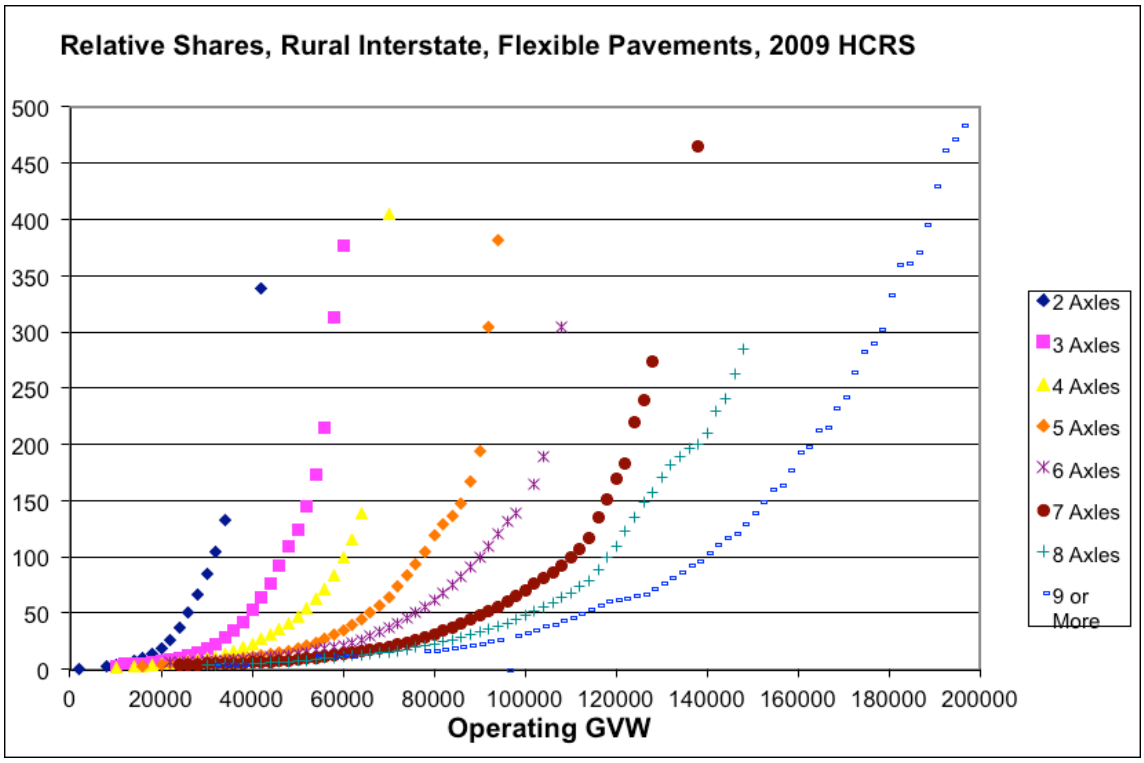
Relative Shares, Rural Interstate, Flexible Pavements, 2009 HCRS
500
450
400
350
300
250
200
150
100
50
0
0
20000
40000
60000
80000
100000
120000
140000
160000
180000
200000
Operating GVW
2 Axles
3 Axles
4 Axles
5 Axles
6 Axles
7 Axles
8 Axles
9 or More

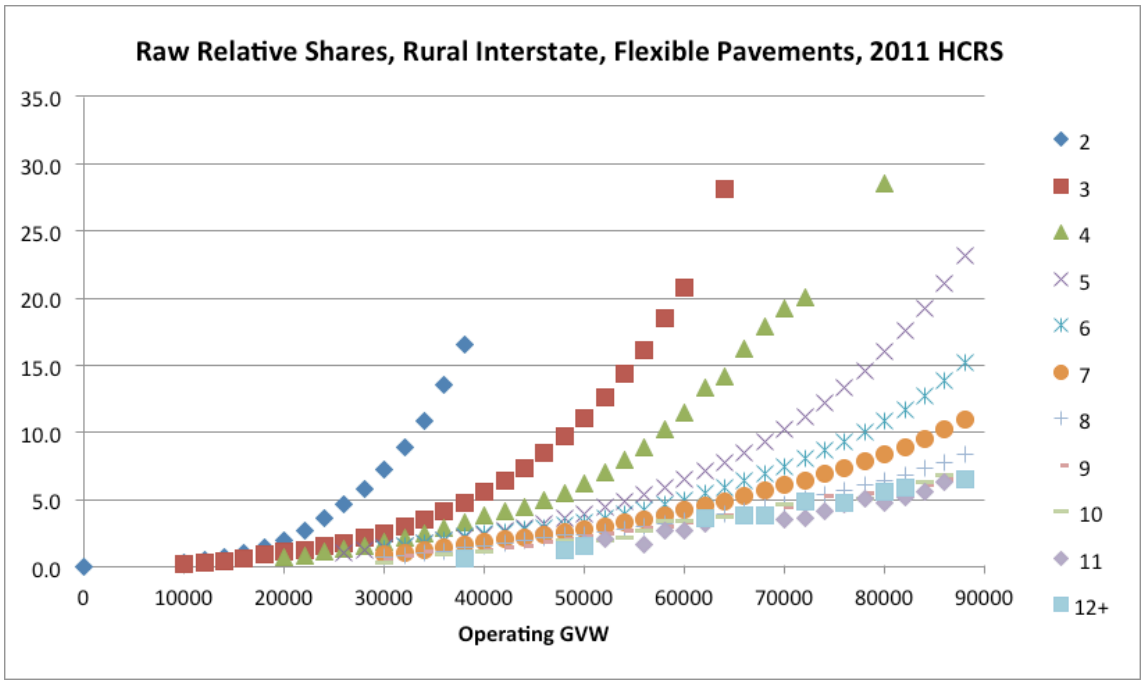
Raw Relative Shares, Rural Interstate, Flexible Pavements, 2011 HCRS
35.0
30.0
25.0
20.0
15.0
10.0
5.0
0.0
0
10000
20000
30000
40000
50000
60000
70000
80000
90000
Operating GVW
2
3
4
5
6
7
8
9
10
11
12+

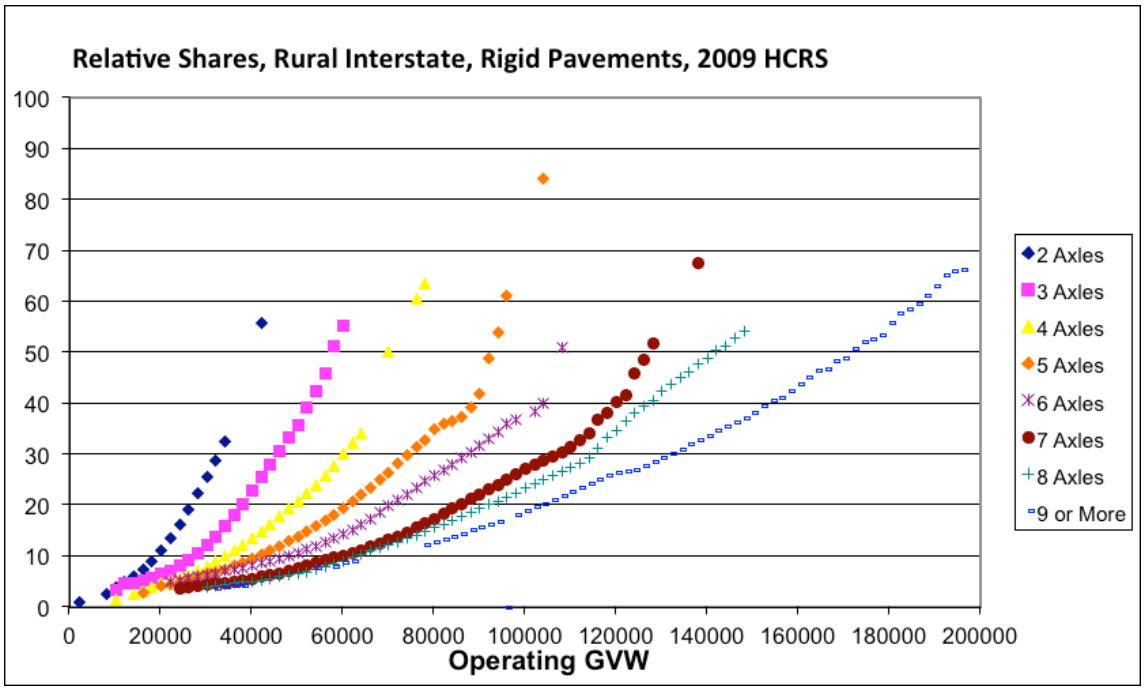
Relative Shares, Rural Interstate, Rigid Pavements, 2009 HCRS
100
90
80
70
60
50
40
30
20
10
0
0
20000
40000
60000
80000
100000
120000
140000
160000
180000
200000
Operating GVW
2 Axles
3 Axles
4 Axles
5 Axles
6 Axles
7 Axles
8 Axles
9 or More

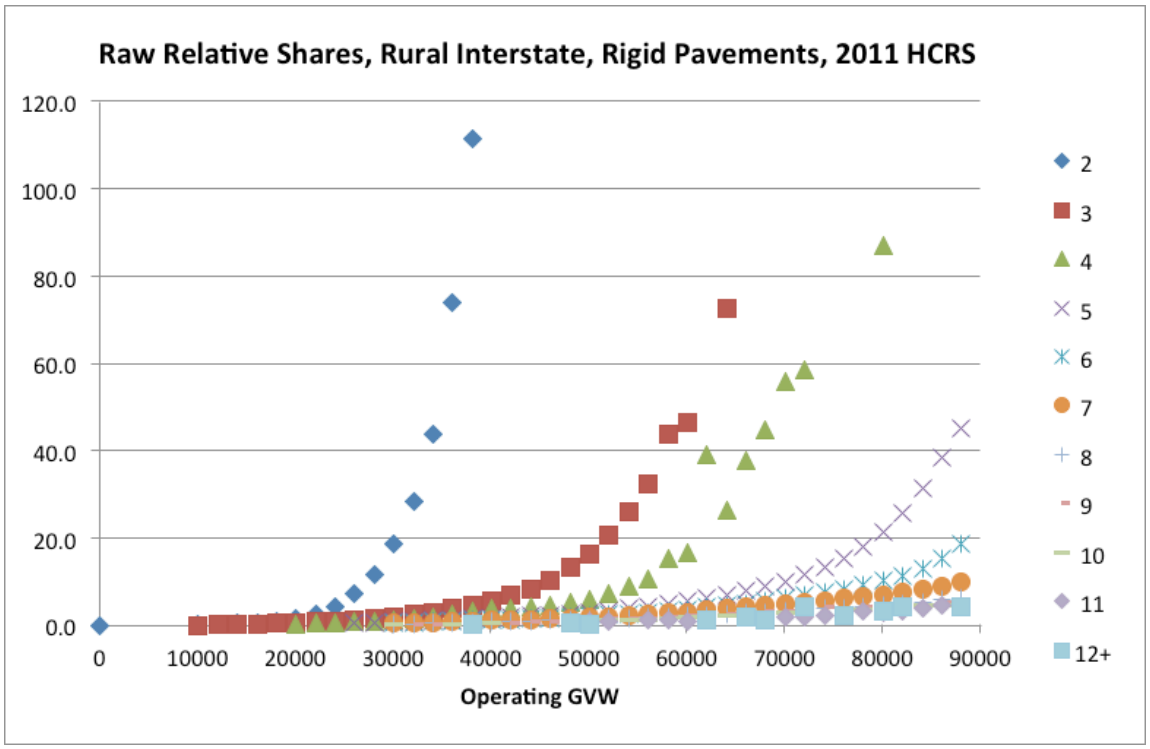
Raw Relative Shares, Rural Interstate, Rigid Pavements, 2011 HCRS
120.0
100.0
80.0
60.0
40.0
20.0
0.0
0
10000
20000
30000
40000
50000
60000
70000
80000
90000
Operating GVW
2
3
4
5
6
7
8
9
10
11
12+

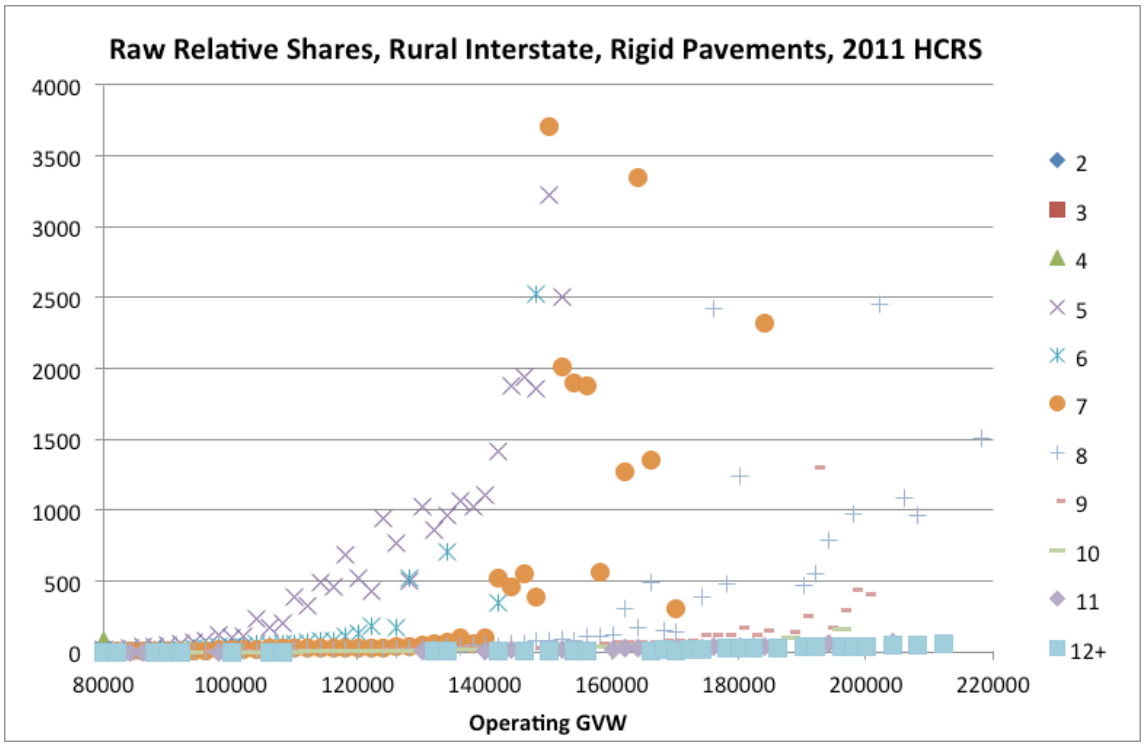

5.0 Smoothing the Cost Responsibility Curves

Because we use 2,000-pound operating gross weight (OGW) increments for each axle configuration in the Cost Allocation Study, many cells have few or no observations in the available WIM data. In 2009, we smoothed the WIM input data by adding scaled virtual WIM observations, based on WIM observations in nearby OGW increments. In 2011, we opted instead to smooth the results curves.

Our first attempts to smooth the results consisted of trying to use multinomial or exponential curve-fitting procedures to fit a single curve or a small number of curves to the full range of OGWs for each axle vehicle configuration. After numerous attempts, we concluded that we were altering the results for far too many OGWs in each configuration.

We finally settled on altering the curves only in the ranges of OGW that had few observations. This procedure was far more labor intensive and produced responsibility curves that were not as smooth as the full-range curve-fitting attempts, but altered the results for far fewer OGW cells.

The following four charts show the results of the adjustment process for the rural Interstate system. We included two charts for each pavement type—vehicles with OGWs above and below 80,000 pounds.

Note the apparent anomaly in the flexible pavement charts for seven- and eight-axle vehicles above 180,000 pounds. Vehicles in these ranges are very uncommon, and the curves were based on far too few observations, so the curves have fairly low validity.

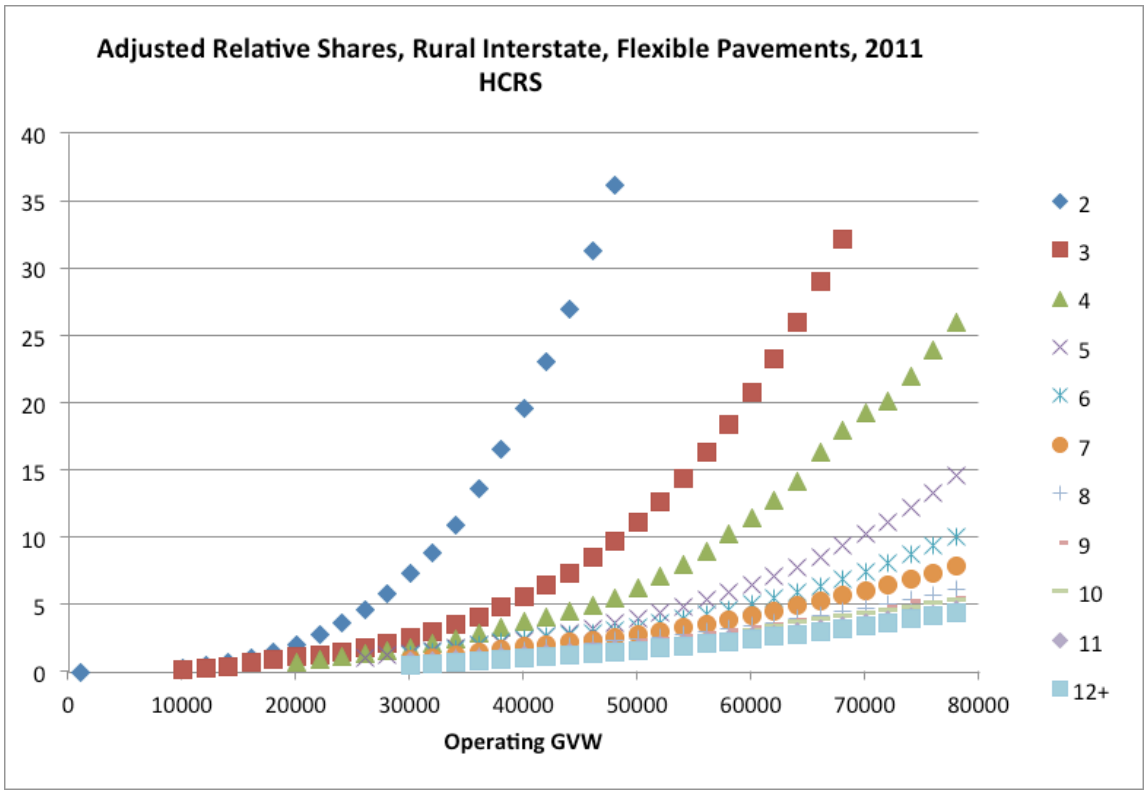
Adjusted Relative Shares, Rural Interstate, Flexible Pavements, 2011 HCRS
40
35
30
25
20
15
10
5
0
0
10000
20000
30000
40000
50000
60000
70000
80000
Operating GVW
2
3
4
5
6
7
8
9
10
11
12+

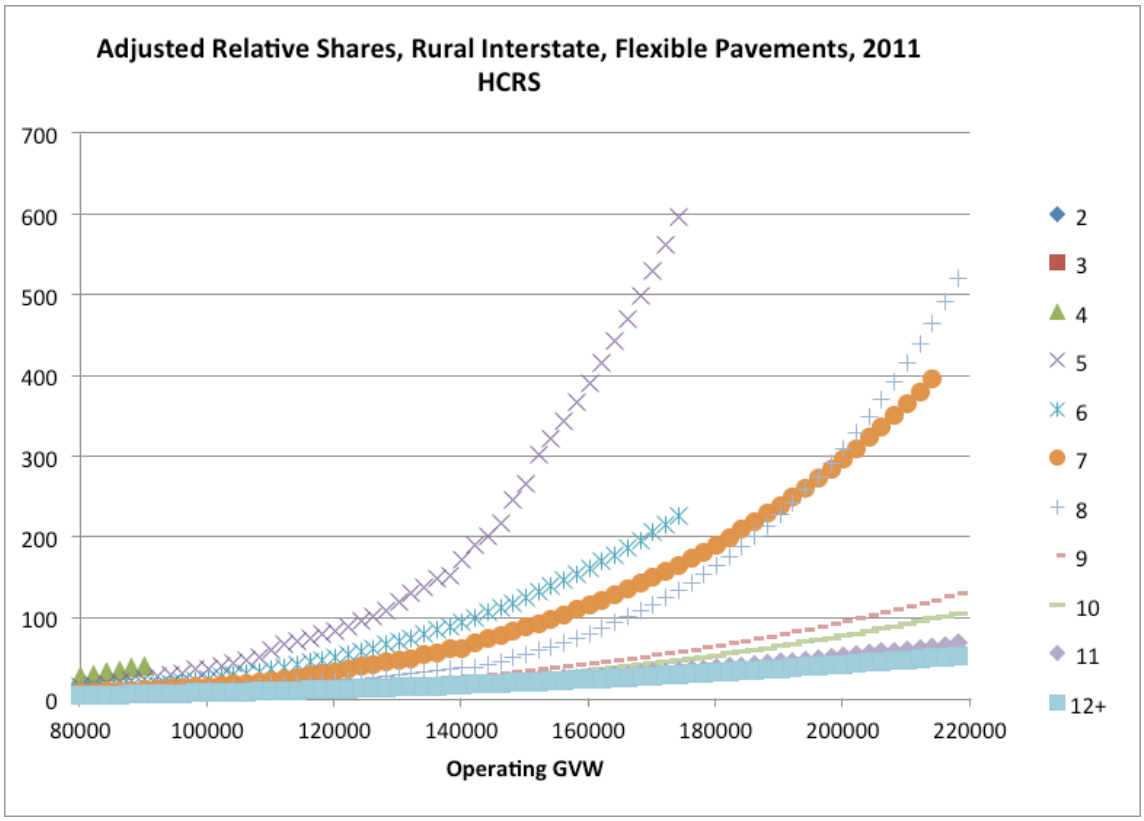
Adjusted Relative Shares, Rural Interstate, Flexible Pavements, 2011 HCRS
700
600
500
400
300
200
100
0
80000
100000
120000
140000
160000
180000
200000
220000
Operating GVW
2
3
4
5
6
7
8
9
10
11
12+

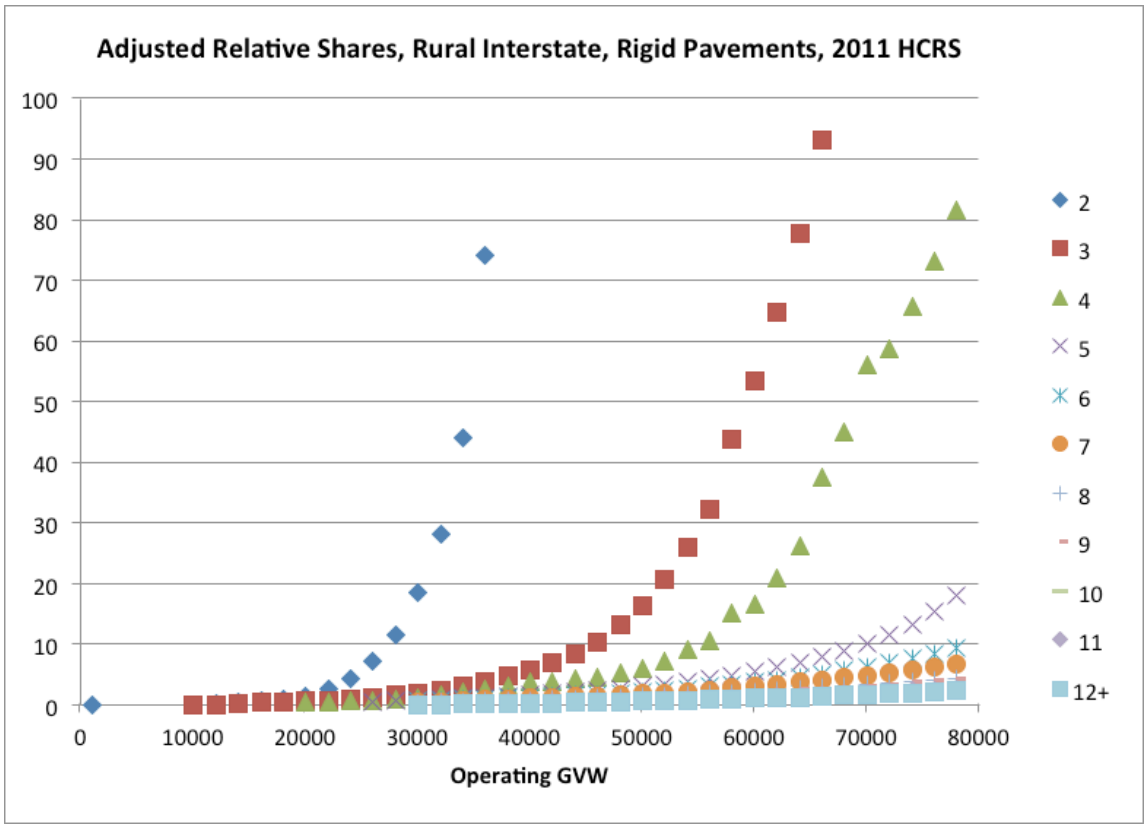
Adjusted Relative Shares, Rural Interstate, Rigid Pavements, 2011 HCRS
100
90
80
70
60
50
40
30
20
10
0
0
10000
20000
30000
40000
50000
60000
70000
80000
Operating GVW
2
3
4
5
6
7
8
9
10
11
12+

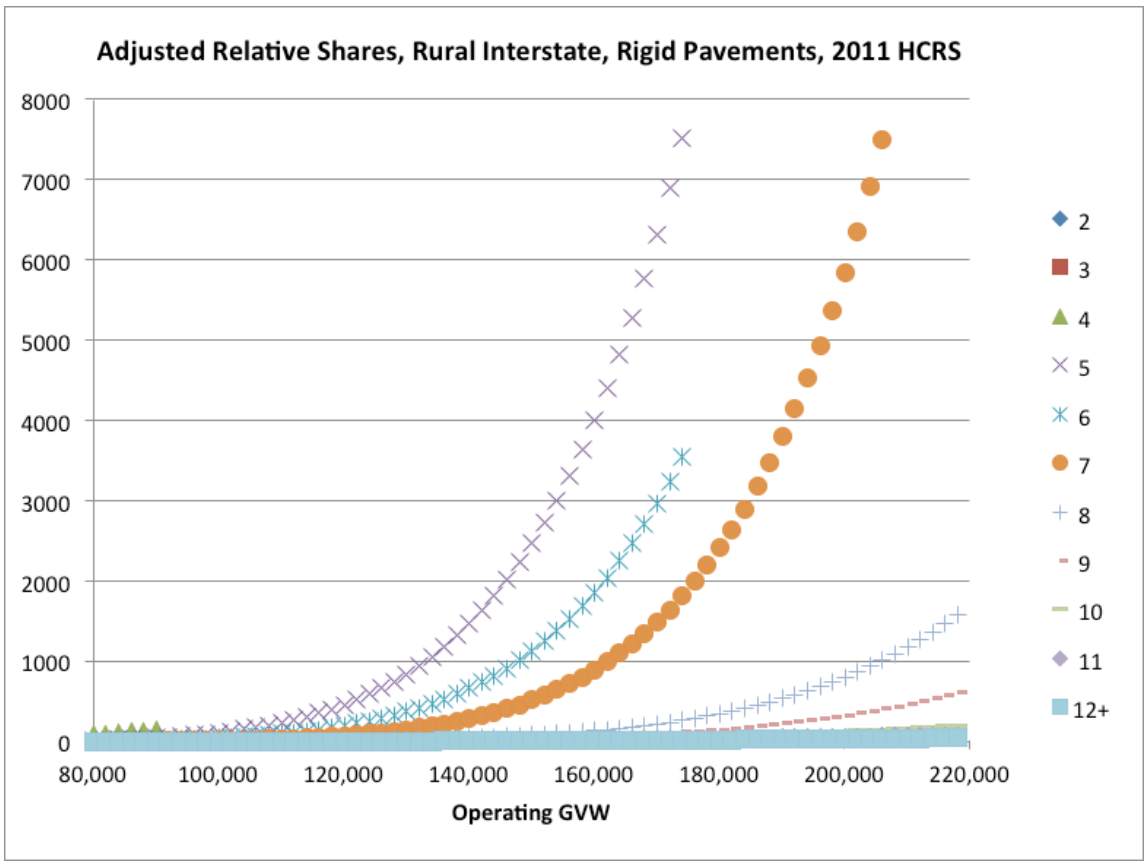
Adjusted Relative Shares, Rural Interstate, Rigid Pavements, 2011 HCRS
8000
7000
6000
5000
4000
3000
2000
1000
0
80,000
100,000
120,000
140,000
160,000
180,000
200,000
220,000
Operating GVW
2
3
4
5
6
7
8
9
10
11
12+

6.0 Augmenting WIM Data in the 2013 Study

Based on the less-than-satisfactory results of after-the-fact smoothing we followed in the 2011 study, we returned to a variation of the WIM-data-augmentation approach we used in the 2009 study. Our recent evaluation of the 2011 pavement analysis revealed that most of the outlying results derived from the very small number of WIM observations in the upper OGW ranges.

We had access to more 18 months of WIM data with more than 15,000,000 truck observations for the 2013 study. We opted to use the most recent 12 months to cancel out possible seasonal bias. Even with the 11,176,000 observations in those 12 months, however, we still had the problem of poor representation in the upper OGW ranges.

We tried several approaches to smoothing the WIM data, and settled on an approach that added a simulated observation for all OGWs above a specified level for each axle configuration. We simply proportioned each axle weight by the OGW ratio for each cell above the actual observation. This eliminated the cells with VMT but no weight observations, and shared the rare observations, greatly reducing the inconsistencies among adjacent weight groups.

This approach resulted in no need to smooth the results after the fact. Because the WIM-smoothing approach accounted for the number of observations, unlike the after-the-fact approach, and because we did not attempt to force the lower weight ranges to any particular curve shape, we have far more confidence in the accuracy of the results for the highest and lowest weight ranges.

The following graphs show results for flexible and rigid pavements on the rural Interstate system, based on this augmented WIM data.

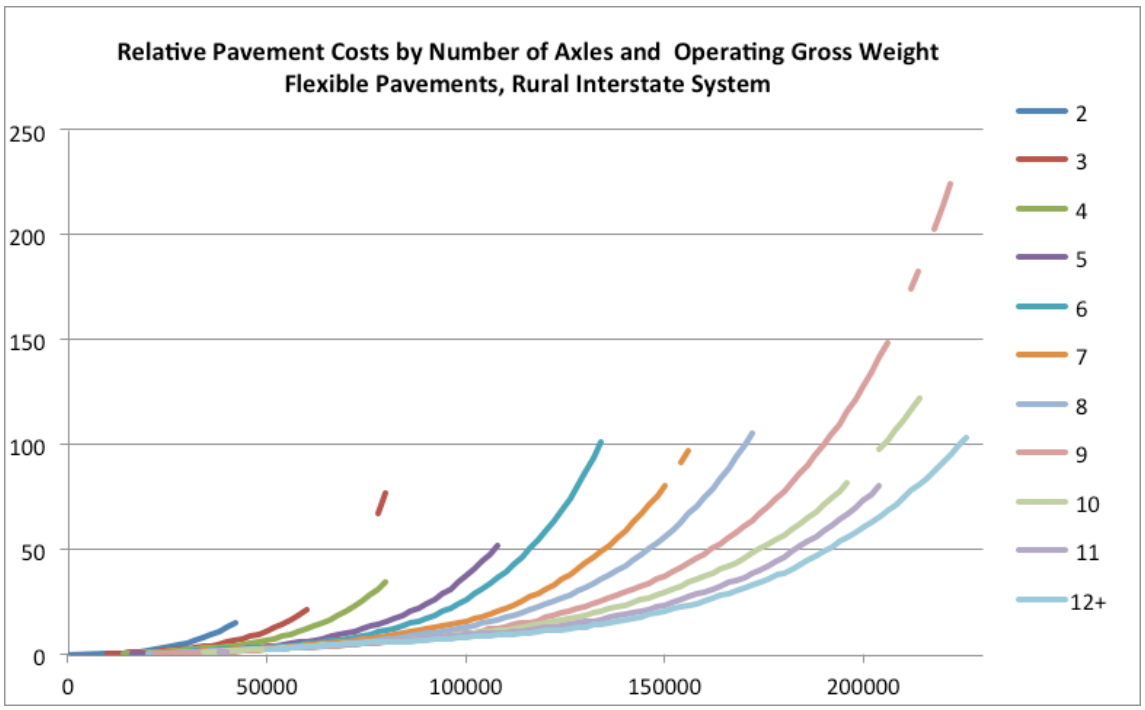

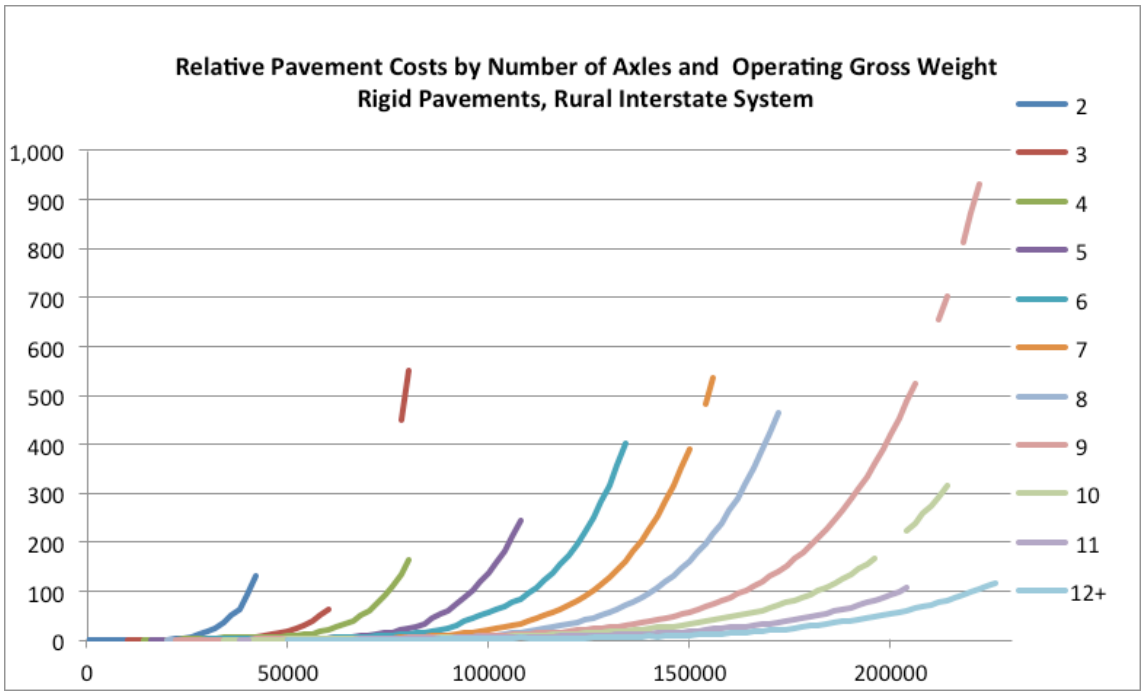
Relative Pavement Costs by Number of Axles and Operating Gross Weight
Rigid Pavements, Rural Interstate System
1,000
900
800
700
600
500
400
300
200
100
0
0
50000
100000
150000
200000
2
3
4
5
6
7
8
9
10
11
12+

Issue Paper 2:

Cost Responsibility Implications of Electric Vehicles

This paper examines the highway cost responsibility implications of the increasing numbers of electric vehicles operating on Oregon roads. In an issue paper for the 2011 study, "Subdividing Light Vehicle Responsibility"[1], we examined several subclasses of light vehicles: SUVs and light trucks with curb weights over 4,000 lbs, traditional passenger cars, "city cars" with curb weights less than 2,000 lbs., and motorcycles. City cars were further subdivided between low- and medium-speed electric vehicles and vehicles with internal combustion engines (ICEs). Motorcycles were subdivided into gasoline- and electric-powered vehicles. That paper concluded that all classes of electric vehicles were underpaying their cost responsibility share because the cost of providing roads for these vehicles is not substantially less than for traditional passenger cars yet they pay no fuel taxes.

In 2010 there were few electric vehicles on the road and little information about their operational characteristics. Since that time, three major auto manufactures have introduced electric vehicles (EVs) and plug-in hybrid electric vehicles (PHEVs), which draw power from the electric power grid. These are traditional passenger cars that could replace large numbers of gasoline- and diesel-powered vehicles, but do not pay fuel taxes in the case of EVs and pay less in fuel taxes in the case of PHEVs. This analysis is not concerned with low- and medium-speed electric vehicles or electric motorcycles, as these likely will continue to have limited, specialized uses.

This paper is concerned with three questions:

1. How much gas tax revenue can we expect be lost because of the presence of EVs and PHEVs over the next 20 years?
2. Is there any reason to believe, based on their design, use and operational characteristics, that these vehicles will impose different costs than light ICE vehicles?
3. What rate for a mileage charge would be required in order for these vehicles to pay their cost responsibility share on the same basis as light ICE vehicles, assuming that the mileage charge would replace only the 30-cent state gas tax (not the federal gas tax) and that the state gas tax will not change?

1.0 Background

1.1 Electric Vehicles and Cost Responsibility

Oregon's highway user fee structure is guided by a concept of cost responsibility. According to that concept, different classes of vehicles should contribute to the financing of road and bridge construction and maintenance in proportion to the costs they impose on roads and bridges. The Oregon constitution requires equity between light vehicles and heavy vehicles.[2]

[1] Oregon Highway Cost Allocation Study 2011-2013 Biennium, Appendix B, p B-97, 2011.

[2] Because vehicles up to 10,000 pay the lowest regular registration fee, the Study Review Team has recommended that vehicles up to 10,000 lbs be considered light and heavier vehicles be considered heavy for the purpose of the constitutionally-mandated equity test.

Both light and heavy vehicles pay a fixed component and a variable component of their user fees. Both pay a registration fee that does not vary with use. Vehicles weighing 26,000 lbs and less also pay a fuel tax which acts as a variable component in meeting their responsibility. Commercial vehicles over 26,000 lbs pay a weight-mile tax. In both cases, the variable component is by far the largest portion of the fees paid.

Since electric vehicles do not pay a fuel tax they do not contribute a variable component as other light vehicles. However, they continue to impose costs on the system and therefore contribute to the responsibility of all light vehicles as a class. The result is that other light vehicles must pay higher rates in order for the class as a whole to meet its responsibility. Since the Oregon constitution requires equity between light and heavy vehicles, if collections from all light vehicles fell as a result of increasing numbers of electric vehicles, then either gas taxes or light-vehicle registration fees would have to be raised or weight-mile taxes or heavy vehicle registration fees would have to be reduced.

The three questions posed in the introduction relate directly to this predicament. How serious is the problem and how serious is it likely to become? Should electric vehicles be treated differently from a cost responsibility point of view? And, base on the answers to the first two questions, how should user fees be imposed in electric vehicles?

1.2 Definitions

For the purpose of this analysis a number of definitions are important:

Light vehicles in Oregon includes all vehicles with gross weights of 10,000 lbs. or less. For cost allocation purposes this is traditionally considered as a single vehicle class.

ICEs are vehicles with internal combustion engines that burn fossil fuels (e.g., gasoline, diesel, compressed natural gas (CNG) or propane). At the present time, more than 99% of Oregon's light vehicle fleet are ICEs.

HEVs are hybrid electric vehicles that use both an electric motor and an ICE to propel the vehicle. They use ICEs and regenerative braking to charge batteries that power the electric motors. Ultimately all the power used by these vehicle comes from gasoline or diesel and is therefore subject to fuel taxes. While these vehicles are often more efficient than their ICE counterparts for this analysis we classify them with ICEs as paying fuel taxes. Prominent examples of these vehicles are the non-plug-in versions of the Toyota Prius and the Honda Insight.

PHEVs are plug-in hybrid electric vehicles which can charge batteries directly from the power grid or from an internal ICE. While they use ICEs to extend their range, a significant portion of their power comes from the electric grid and thus is not subject to fuel taxes. While operating on electric power from the grid, these vehicles are not paying the variable component of highway user fees. A prominent example of this type of vehicle is the Chevy Volt.

EVs are electric vehicles without internal combustion engines. They must plug into the electrical grid in order to charge batteries that provide power to electric motors. These vehicles do not pay fuel taxes and therefore do not currently pay a mileage or variable component in road use fees. The Nissan Leaf is a prominent example of this type of vehicle.

Neighborhood electric vehicles, low-speed electric vehicles, medium-speed electrical vehicles and electric motorcycles are very small

vehicles that are often speed limited. They were evaluated in the previous 2011 HCAS issue paper, but are not considered in this analysis.

For the purpose of this analysis the term electric vehicles refers to EVs and PHEVs operating in pure electric (drawdown) mode.

1.3 General Trends

The following trends are significant to the analysis in this paper:

1. EVs and PHEVs are likely to grow as a percentage of the vehicle fleet. Currently, they are less than 1% of the light vehicle fleet in Oregon and are expected to remain below 1% for the next eight years or so, but after 2020, their share of the fleet could grow significantly. Some forecasts show EVs and PHEVs reaching 36% of the fleet by 2035[3], but in the "medium" scenario, the combined EV and PHEV share remains below 2% in 2035.
2. The fuel efficiency of gasoline and diesel vehicles is increasing and is expected to grow from a fleet average of around 20 miles per gallon (MPG) to more than 30 MPG by 2035. This will affect fuel tax revenues, even if electric vehicles do not become a significant portion of the fleet. This also has implications for a potential mileage or registration fee for vehicles not paying fuel taxes, since the equivalent mileage fee will be a moving target.
3. It appears that a much wider variety of EV and PHEV vehicles will be available in the near future. The "Plugincars" website[4] lists 18 EV and PHEV vehicles that will be on the market for the 2013 model year. If battery technology continues to develop and costs continue to fall, the EV/PHEV fleet will likely eventually resemble the overall light vehicle fleet in terms of vehicle types. That means that MPG of ICE vehicles being replaced by EVs and PHEVs will begin to resemble the light vehicle fleet average rather than only passenger cars.
4. Three technological trends will affect the introduction of electric vehicles: battery cost, battery weight, and recharging speed. The cost of electric vehicles is significantly more than equivalent sized ICEs due primarily to the cost of batteries. In addition, the range of pure electric vehicles is limited by the size of batteries that can be carried in the vehicle. Required time to recharge also makes the use of these vehicles inconvenient for long trips even when charging stations are available. Technological breakthroughs in these areas could increase the market share of these vehicles significantly.

2.0 Revenue Loss from EVs and PHEVs

2.1 Current Revenue Loss from EVs and PHEVs

At the present time and for the next few years the loss of fuel tax revenue due to electric vehicles will be small because they make up only a small percentage of the fleet. As of March 2012, there were 1,053 EVs and 137 PHEVs registered in Oregon.[5] EVs and PHEVs pay the same registration fees as other passenger vehicles and light trucks.

---

[3] CH2M-Hill, Oregon Road Usage Charge Pilot Project: Vehicle Fleet Forecast Final Report, July 17, 2012, p 40.

[4] http://www.plugincars.com/cars (Accessed August 21, 2012).

[5] EVs were reported in CH2M-Hill, Oregon Road Usage Charge Pilot Project: Vehicle Fleet Forecast Final Report, July 17, 2012, p 19. PHEVs were determined by ODOT Economic and Financial Analysis Unit.

Since these vehicles do not pay the 30 cent per gallon state fuel tax, we estimate the per mile rate that would be equivalent to a fuel tax in order to understand how much revenue is being lost. They also do not pay the federal fuel tax of 18.4 cents per gallon, but since this is a study of Oregon impacts we are not considering that component.

In 2012, the average light vehicle is projected to have a MPG of 20.56, which translates to 1.46 cents per mile. However, the EVs and PHEVs currently operating in Oregon have generally replaced 2011 and 2012 model year passenger cars, which get an estimated 28 MPG, and an equivalent tax of 1.08 cents per mile. Based on an average annual mileage of 10,000, this amounts to a loss per vehicle of $108 and a total annual loss for all EVs of $64,000 compared to the vehicles that would likely be on the road in the absence of these EVs.

Calculation of PHEV rates is more complicated because part of the time they are operating on highway fuel. Studies of the Chevy Volt and Ford Escape PHEVs by Idaho National Labs (INL) found that approximately 50% of the time they were operating as EVs.[6] Using the 50% figure, the per-vehicle loss is estimated at $54 per year. This amounts to a total loss for all PHEVs of $7,400 for 2012.

Combining the results for EVs and PHEVs, the 2012 revenue loss from these vehicles is around $71,000. This is less than one-tenth of one percent of state fuel tax collections.

2.2 Future Revenue Loss from EVs and PHEVs

Projecting future loss of revenue due to electric vehicles requires consideration of the number of EVs and PHEVs and the average fuel economy of alternative ICE vehicles. Regarding the number of these vehicles likely to be in the future fleet, there is no consensus in the literature. In 2011, Oakridge National Labs reviewed 41 forecast scenarios for PHEV market penetration made by eight institutions.[7] In 2050, forecasted market penetration ranged from nearly 0% to 90%. Obviously, this technology is still emerging and there is no consensus as to whether how successful electric vehicles will become. The Oakridge Study found that 65% of the forecast scenarios resulted in EVs accounting for less than 20% of light vehicle sales by 2050, 20% of the forecast scenarios resulted in EV market shares between 20% and 50% in 2050, and the remaining 15% of scenarios resulting in EV market shares over 50%.

In 2012 ODOT, contracted with CH2M-Hill to review existing forecasts and provide alternative scenario forecasts for ODOT's own future forecasts of fuel tax revenue and green house gases (GHG). That report included eight scenarios of potential market penetration for EVs and PHEVs. The range of those forecasts is summarized by the four scenarios shown in Figure 1.[8] In making these forecasts the CH2M-Hill report considered three significant factors: market preference and competition from other technologies, MPG of the ICE fleet and range of electric vehicles. The Medium forecast is based on the mid range of each of these assumptions, that is: there is no significant change in market preference compared to other technologies, MPG of the ICE fleet is consistent with average long range forecasts and the range of EV does not exceed 200 miles.

The lowest forecast is based on assumptions of rapid increase in fuel economy of ICEs that render further development of electric vehicles uneconomic. The high forecasts assumes

[6] See http://avt.inl.gov/pdf/EREV/GMMay11-June12.pdf (Accessed August 14, 2012).

[7] USDOE, Oakridge National Lab, A Comparative Study of Emerging Vehicle Technology Assessments, February 2011.

[8] For details see CH2M-Hill, Oregon Road Usage Charge Pilot Project: Vehicle Fleet Forecast Final Report, July 17, 2012 pages 33, 35, 37 and 40.

additional technological breakthroughs in battery cost, range and recharge speed that make EVs and PHEVs a preferred substitute for ICE vehicles.

Figure 1: Electric Vehicles and Plug-In Hybrids as a Percent of Oregon Light Vehicle Fleet

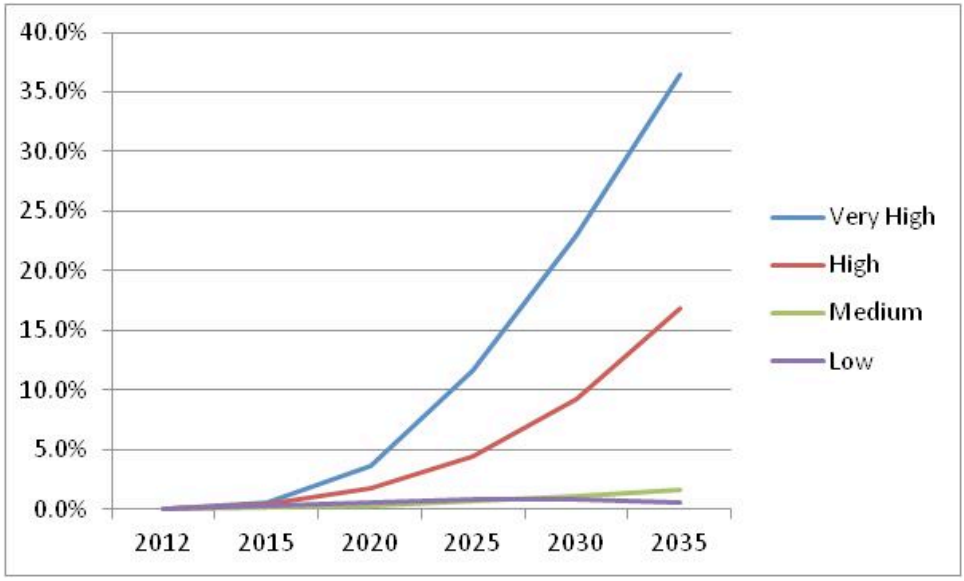

In the low and medium scenarios the proportion of EVs and PHEVs in the fleet never exceeds 2%. In either of these two scenarios there would be little lost revenue as a result of these vehicles. Even in the high and very high scenarios, EVs and PHEVs do not reach significant numbers until after 2020.

Figure 2 shows the annual miles of travel that would not be subject to fuel taxes under each of the four scenarios. This includes all EV miles and one-half of PHEV miles. The graph is based on the percentages of VMT by various types of vehicles from the CH2M-Hill report and a control total from and ODOT long range forecast of fuel tax revenues.[9] According to these forecasts there were be very little impact from medium and low scenarios. Only the high and very high scenarios would significantly impact fuel taxes.

[9] Calculation related to overall fuel tax collections are based on ODOT, "Long-run Oregon Fuel Tax Revenue Scenarios Using Alternative Fuel Price and Fuel Efficiency Assumptions, Cyclical Case". (As of August 24, 2012 the report had not yet been released.)

Figure 2: Annual Vehicle Miles of Travel Not Subject to Fuel Taxes

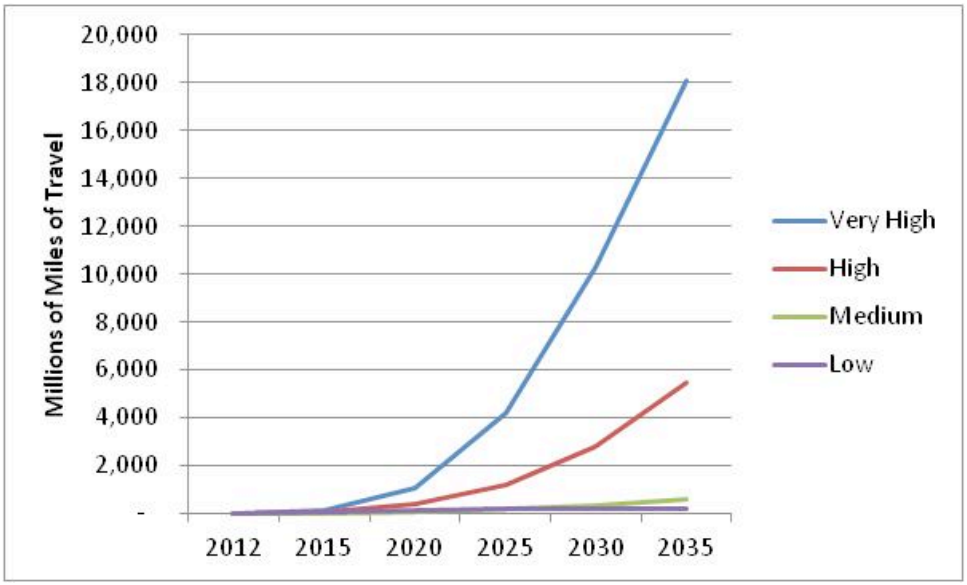

How we view the future financial impact of untaxed miles of travel by EVs and PHEVs depends in part on what we view as the appropriate equivalent mileage rate for these vehicles. In reviewing current loss we compared EVs and PHEVs currently on the road to the vehicles they likely replaced in the fleet. However, there could be a legitimate equity argument that these vehicles should pay on the same basis as the average light fleet vehicle. They are all part of the same vehicle class for cost responsibility purposes and over time the distribution of electric vehicle types and sizes is expected to become more similar to the light vehicle fleet as a whole.

Table 1 calculates future loss for the medium scenario based on two different approaches. The first approach is to use the light fleet average MPG to determine the mileage fee equivalent that EVs and PHEVs should pay. The other approach is shown in columns labeled "As Sold New." In this approach MPG and mileage rates are calculated based on an assumption that each vehicle would pay the mileage rate of the average ICE vehicle for the model year in which it was originally purchased. This equivalent mileage rate would be lower, especially in early years. In later years as the age profile of the EV and PHEV fleets began to resemble the ICE fleet it would make less difference. In years 2012 and 2015 the "As Sold New" mileage rates are slightly lower based on the assumption that most of the EVs and PHEVs are replacing cars, while in later years we assume that these vehicles will include light trucks and SUVs in similar proportions as ICE vehicles.[10]

[10] Estimates of MPG are taken from ODOT, "Long-run Oregon Fuel Tax Revenue Scenarios Using Alternative Fuel Price and Fuel Efficiency Assumptions, Cyclical Case".

Table 1: Equivalent Mileage Revenue for Vehicles Operating on Electric Power from the Grid Medium Scenario[11]

	ICE Equivalent MPG		Mileage Rate Equivalent (Cents at $0.30/gal)		Miles from Grid Electricity	Impact ($ thousands)		As Percent of Total Fuel Tax Forecast	
	Fleet Ave	As Sold New	Fleet Ave	As Sold New	(millions)	Fleet Ave	As Sold New	Fleet Ave	As Sold New
2012	20.6	27.8	1.46	1.08	7	$ 102	$ 76	0.0%	0.0%
2015	21.4	27.6	1.40	1.09	14	$ 200	$ 155	0.0%	0.0%
2020	23.6	27.4	1.27	1.09	80	$ 1,021	$ 880	0.2%	0.2%
2025	25.1	28.6	1.20	1.05	196	$ 2,346	$ 2,059	0.4%	0.4%
2030	26.7	29.1	1.12	1.03	309	$ 3,476	$ 3,189	0.7%	0.6%
2035	28.1	29.2	1.07	1.03	613	$ 6,539	$ 6,293	1.2%	1.2%

There are two important conclusions from this table. First, the medium scenario results in very little revenue loss, reaching only 1.2% by 2035. Second, after an initial adjustment period the difference between calculating loss based on average versus comparing to new vehicles of the same year makes less and less difference.

In Table 2 we calculate equivalent mileage fees for the medium and very high scenarios, calculating the equivalent mileage based on fleet average. Under the medium scenario the equivalent revenue loss would reach only 0.2% by 2020 and 1.2% by 2035. Even under the very high scenario revenue loss would remain below 1% until 2020, after which it could grow substantially, reaching 36% by 2035.

Table 2: Revenue Implications of Electric Vehicles In Future Years

	Mileage Rate	Miles from Grid Electricity		Equivalent Mileage Revenue Not Collected			
		Medium	Very High	Medium Scenario		Very High Scenario	
	Cents	Millions		Thousands	% of Fuel Taxes	Thousands	% of Fuel Taxes
2012	1.46	7	7	$ 96	0.0%	$ 96	0.0%
2015	1.40	14	132	$ 200	0.0%	$ 1,857	0.4%
2020	1.27	80	1,089	$ 1,021	0.2%	$ 13,849	2.7%
2025	1.20	196	4,234	$ 2,346	0.4%	$ 50,610	9.7%
2030	1.12	309	10,298	$ 3,476	0.7%	$ 115,706	21.7%
2035	1.07	613	18,098	$ 6,539	1.2%	$ 193,212	35.9%

In summary, present revenue loss due to electric vehicle which draw power from the grid and do not pay fuel taxes for all or a portion of their travel is quite small. It is unclear whether or not it will be significant in the future.

3.0 Highway Cost Impacts of Electric Vehicles

The second question to be investigated in this paper is whether the cost responsibility of electric passenger cars and light trucks is likely to be any different from that of other light vehicles. If treated

[11] MPG rates used in this table are from Energy Information Administration (EIA), Annul Energy Outlook, 2012, June 25, 2012, Table 52, "Light Duty Vehicles Miles per Gallon by Technology Type, Reference Cast," available at, http://www.eia.gov/oiaf/aeo/tablebrowser/#release=AEO2012&subject=0-AEO2012&table=50-AEO2012&region=0-0&cases=ref2012-d020112c (Accessed August 24, 2012).
Calculation in the final two columns related to overall fuel tax collections are based on ODOT, "Long-run Oregon Fuel Tax Revenue Scenarios Using Alternative Fuel Price and Fuel Efficiency Assumptions, Cyclical Case". (As of August 24, 2012 the report had not yet been released.)

as a different class of vehicles would their responsibility for road costs be different from light gas and diesel powered vehicles? There are three parts to this question:

1. Are there dimensional or weight considerations that either require different road infrastructure from other basic vehicles or create different maintenance costs?
2. Do these vehicles use different roads than are used by other basic vehicles?
3. Are there operational characteristics which might result in a different cost responsibility for electric vehicles?

3.1 Weight and Dimensional Considerations

Table 3 shows the size and weight of typical EVs and PHEVs compared to typical ICE light vehicles. The table shows that with regard weight, width, height and length, the factors that are likely to affect incremental road costs, the vehicles currently on the market appear to be very similar to basic gas powered vehicles. As noted earlier, additional brands and models expected to come onto the market are expected to be more representative of the types and weights of existing light vehicles. Hence there is no reason to believe they would require different road designs or have a different effect on road maintenance costs.

Table 3: Weight and Dimensions of Typical Electric and Gas Powered Vehicles

	Curb Weight	Length	Width	Height
	lbs.	inches		
Typcial PHEV and EV				
Chevy Volt	3,781	177	70	57
Nissan Leaf	3,385	165	70	61
Transit Connect Electric*	3,960	180	83	79
Typcial ICE Passenger Vehicles				
Honda Civic	2,641	177	69	57
Buick Lacrosse	3,835	197	73	59
Subaru Outback	3,503	189	72	66
Ford F-150 Super Crew	5,345	244	79	75

* by Ford/Asure Dynamics

3.2 Do Electric Vehicles Use Different Roads?

Currently, most electric vehicles are registered in metropolitan counties. However, this appears to be a short term phenomenon that will not continue. Average daily travel distances for all geographic areas from small towns metropolitan cities are well within the range of newer EVs. PHEVs are not range limited. As charging facilities become faster and more dispersed and batteries are improved to allow for longer trips, these vehicles are expected to become more geographically disbursed throughout the state. ODOT's GreenSTEP model, which uses a household purchase decision algorithm to predict vehicle ownership, predicts approximately the same percentage of electric vehicles in rural counties as in urban counties. Therefore, we see no reason to believe that these vehicles will be limited to roads in and around metropolitan areas.

Even as EVs become more dispersed across the state, driving ranges will likely be more limited than for ICEs. If this continues to be the case they will continue to be used for shorter trips and may not use rural highways in the same proportion as other vehicles. PHEVs will probably use

hybrid modes for longer trips and EVs will likely continue to make less use of rural highways. Since rural highways are less expensive to build and maintain than urban highways there could be a small effect on cost responsibility from this factor.

3.3 Operational Considerations

There are two operational considerations that could affect the cost responsibility of an EV/PHEV sub class of basic vehicles:

1. Do EVs and PHEVs tend to use congested facilities at peak periods in a different proportion than other vehicles? The current Oregon cost allocation formula allocates a portion of road expansion costs in proportion to displacement of the vehicles using those roads during peak periods. In addition, operational cost of congested roads may be higher; and
2. Do they have different operational characteristics in mixed traffic? The amount of displacement (measured in passenger-car equivalents or PCEs) created by a vehicle in mixed traffic affects vehicle displacement and therefore the cost of developing and operating these facilities.

3.3.1 Do Electric Vehicles Operate More Often at Congested Times?

Unfortunately, we do not have data on use of EVs and PHEVs that would tell us if they are used more often for commuting or during peak traffic periods. However, based on information from the 2009 Household Travel Survey there would have to be a very significant bias toward use of these vehicle during commuting hours for there to be any impact on cost allocation. Figure 3 shows data from the 2009 National Household Transportation Survey.7 This graph shows the general pattern of trips throughout the day, with peak hours highlighted in red boxes. The graph shows that there are a significant number of trips taking place during the middle of the day for reasons other than commuting. Since EVs and PHEVs would be well suited for mid-day as well as commute trips it is unlikely that they could have enough bias toward commuting trips to significantly affect their cost responsibility.

Figure 3: Trip Start Times for All Vehicles[12]

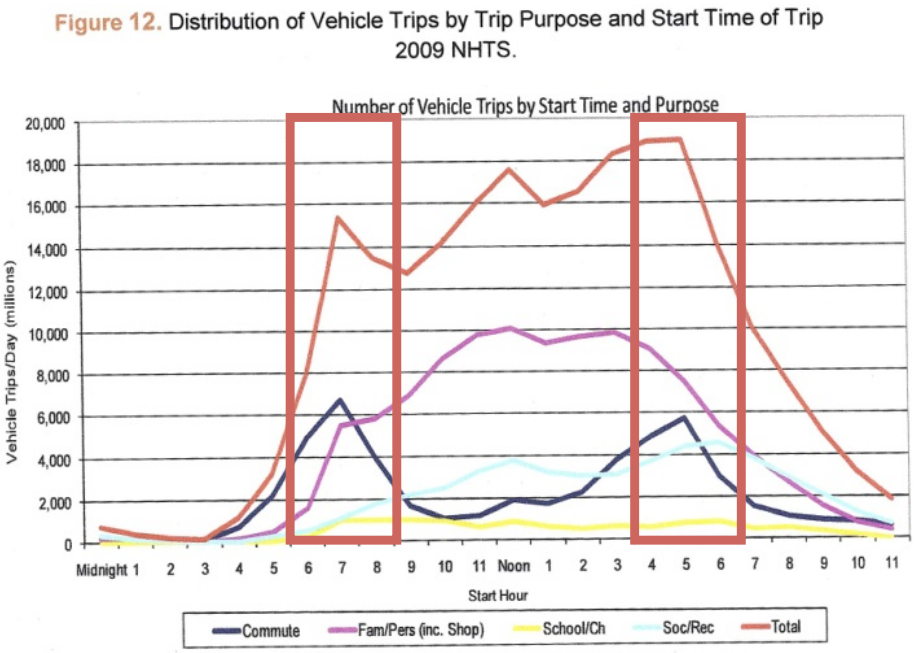

While future survey work will be needed to better clarify travel patterns of EVs and PHEVs, there is no reason to believe the use of electric vehicles is, or will be, different from those of the passenger fleet in general. Therefore on the basis of time of operation there would be no difference in the cost responsibility of electric vehicles if considered as a separate vehicle class.

3.3.2 Do Operating Characteristics of Electric Vehicles in Mixed Traffic Differ from ICEs?

There is no evidence that the operation of EVs and PHEVs which meet the same safety and operational requirements as other passenger cars have any different performance from ICE vehicles in mixed traffic. They do not take up more space on the roadway, they accelerate from stops at least as well, if not better, than other vehicles, they maintain speeds as well as any other passenger cars and they are equally maneuverable.

In conclusion, from a cost responsibility point of view, today's typical electric passenger vehicles fit neatly into the existing light vehicle category.

4.0 Appropriate Mileage Rate for Electric Vehicles

The appropriate mileage rate for electric vehicles according to cost responsibility criteria poses and interesting dilemma. In theory all vehicles of 10,000 lbs gross weight and below have the same cost responsibility and should be paying the same fees. However, it has long been recognized that pickup trucks, large SUVs, full size vans and other vehicles at the higher end of the light vehicle category are paying more taxes because of lower MPG. As we pointed out in Section 2.1, the average light vehicle in the fleet is now paying approximately 1.46 cents per mile in state fuel taxes while late model passenger cars are paying an average of 1.08 cents per mile.

Table 4 shows the mileage rate or equivalent annual registration fee that would be required today to compensate for

[12] USDOT, National Household Transportation Survey: Summary of Trends, June 2011, p52. Peak period boxes drawn by MFA for emphasis.

cost responsibility base two different assumptions. The first assumption is that equity requires that electric vehicles pay the same rate per mile as the average of all light vehicles, since they are all one class from a cost responsibility point of view. The second assumption is that a distinction should be made between smaller passenger cars and larger trucks, SUVs and vans. In both cases a registration fee option is noted as well as a mileage fee option. PHEVs would pay one half the rate as EVs because only half the power they use is drawn from the electric grid with the other generated internally by and ICE. The ICE uses fuel for which a fuel tax is paid.

Table 4: Equivalent Mileage and Registration Fees for Electric Vehicles Under Alternative Approaches

		Single Rate for all Light Vehicles		Alternative Rates by Weight	
		Mileage Fee (Cents)	Alternate Annual Reg Fee	Mileage Fee (Cents)	Alternate Annual Reg Fee
EV	Automobile	1.46	$146.00	1.25	$125.00
	Light Truck/SUV/Van	1.46	$146.00	1.70	$170.00
PHEV	Automobile	0.73	$73.00	0.63	$63.00
	Light Truck/SUV/Van	0.73	$73.00	0.85	$85.00

As noted in Section 2.1 and in Table 1, if we considered the specific mileage equivalent for each model year based on MPG the automobile rate might drop to 1.08 cents per mile and each model year would have its own rate. We did not attempt to construct a payment schedule based on specific model years.

Looking into the future, as the MPG of the ICE fleet rises the equivalent mileage rate based on the current gas tax rate of 30 cents per gallon will decline. Electric vehicles would soon be overpaying compared to gas and diesel vehicles. Table 5 shows the equivalent average mileage rates that would have to be charged in order for EVs and PHEVs to pay the equivalent state gas tax rate of 30 cents per gallon as fleet MPG increases. Rates would drop from 1.46 cents per mile today to 1.07 cents per mile in 2035.

Table 5: Future Mileage or Annual Registration Rates for Equity with 30 Cent Fuel Tax

	Mileage Fee		Alternate Annual Reg Fee	
	EV	PHEV	EV	PHEV
	Cents		Cents	
2012	1.46	0.73	$146.00	$73.00
2015	1.40	0.70	$140.00	$70.00
2020	1.27	0.64	$127.00	$64.00
2025	1.20	0.60	$120.00	$60.00
2030	1.12	0.56	$112.00	$56.00
2035	1.07	0.53	$107.00	$53.00

5.0 Conclusions

With regard the three questions posed in the introduction, this paper reaches the following conclusions:

1. Currently, the revenue loss because these vehicles do not pay the 30 cent per gallon state fuel tax is small; but under certain circumstances, it could grow substantially in the future. The 2012 loss is estimated at $71,000. Because it is not yet clear how many electric vehicles will be used on Oregon roads, it is not possible to make a firm estimate of future revenue loss. Some scenarios estimate that these vehicles will never make up more than 1% of the fleet. The highest estimate of electric vehicle use examined in this paper envisions more rapid growth of EVs and PHEVs and puts the annual loss from non-payment of fuel taxes at $1.8 million by 2015 and $193 million by 2035.
2. An evaluation of the current generation of electric and plug-in hybrid electric vehicles does not identify any factors that would cause these vehicles to impose significantly different costs on the highway system and hence justify user fee rates different from other light vehicles. They impose costs on the road system similar to those imposed by existing light vehicles powered by ICEs.
3. As to what rate electric vehicles should pay, Oregon's 30 cent per gallon fuel tax rate is equivalent to 1.46 cents per mile based on the current average MPG of conventional gas and diesel vehicles. We note that passenger cars obtain higher MPG than light trucks, SUVs and vans. If one wanted to take this distinction into account in mileage fees, then fees of 1.25 cents per mile would be required from electric passenger cars and 1.70 cents per mile from light trucks, SUVs and Vans. We also noted that since PHEVs draw only half their power from the grid, they would pay a mileage fee only half that of EVs. As an alternative to mileage fees it would be possible to charge annual registration fees for EVs and PHEVs.

   However, the fuel economy of gas and diesel vehicles is increasing and the equivalent rate per mile is, accordingly, declining. It is estimated that by 2015 the average mileage rate for gas and diesel vehicles could decline to 1.40 cents per mile and that by 2035 it will have fallen to approximately 1.07 cents per mile. If mileage fee or registration fees were used as an alternative to gas taxes for EVs and PHEVs then equity considerations over time should also be taken into account.

   Another possibility would be to shift all light vehicles to a per-mile fee, eliminating concerns with changing MPG and with changing EV and PHEV market shares.

5.1 Cost Responsibility Implications

If the market for electric vehicles develops and these vehicles do become a significant part of Oregon's light vehicle fleet there could be two significant cost responsibility implications. First, the loss of revenue compared to heavy vehicle could lead to an imbalance between light and heavy vehicles that would require either an increase in light vehicle taxes, presumably by increasing the gas tax, or a reduction in heavy vehicle taxes. Second, from a road user perspective there is an inequity between ICE vehicles which pay fuel taxes and electric vehicles which pay no equivalent fee for use of the roads.

In the past few years there has been discussion of the introduction of a mileage fee for all basic vehicles. Such an approach would eliminate both aspects of the problem. First, road revenues would not

decline with improvement in fuel economy. Second, since all vehicles would be paying on the same basis there would be no need to reconcile rates being paid by ICE vehicles with those of EVs and PHEVs.

5.2 Recommendations

1. Electric vehicles of 10,000 lbs. GVW and less, meeting the same safety requirements as passenger cars and capable of operating at highway speeds should continue to be treated as light vehicles for cost responsibility purposes.
2. As soon as possible Oregon's fuel tax should be augmented or replaced with a mileage fee. This is necessary both because of the increasing presence of vehicles that do not use gasoline or diesel fuel and because of the increases expected in the fuel efficiency of light vehicles using internal combustion engines.
3. Until a mileage fee can be implemented, additional annual registration fees should be imposed for vehicles drawing power from the electric grid in order to maintain equity with other vehicles paying fuel taxes for the privilege of using Oregon's highways streets and roads.
4. The design and implementation of a mileage fee should accommodate the future transition to efficient-fee pricing, under which the per-mile rate varies with the time and place the vehicle operates and with the weight and size of heavy vehicles.

Issue Paper 3:

Treatment of Subsidies in Oregon's Highway Cost Allocation Study

This paper addresses the question of how to deal with vehicles that pay reduced user fees in the context of highway cost allocation in Oregon. In Oregon, user fees consist of registration fees, fuel taxes, weight-mile taxes, and road use assessment fees. In addition, plate fees, special permits, and administrative charges are assessed to highway users. With the exception of reinstatement fees for suspended licenses, none of these other fees produce net revenue for the Highway Fund, though some plate fees do raise money for other causes. The weight-mile tax is assessed on commercial vehicles over 26,000 pounds and up to 105,500 pounds and results in more revenue collected from those vehicles . The road-use assessment fee is assessed per trip on heavier vehicles with non-divisible loads. Divisible loads over 105,500 pounds are not allowed.

Some vehicles pay from lower, alternative fee schedules and some are exempted from certain fees. In this paper, we refer to vehicles that pay the full fees as full-fee-paying vehicles and those that pay reduced fees as subsidized vehicles. We refer to the dollar amount of the difference between what subsidized vehicles do pay and what they would pay if they paid full fees as the subsidy amount. Some alternative fee schedules, such as the flat fee schedules for heavy trucks carrying logs, wood chips, or sand and gravel, are designed to collect the same amount of revenue as the full fee schedule and we consider vehicles paying from those schedules to be full-fee-paying vehicles. Other vehicles pay less than otherwise-equivalent vehicles because of the nature of the the full fee schedule. For example, electric vehicles pay the full 30 cents of gas tax on all zero gallons of gasoline they burn, but pay less per mile than other light vehicles. We treat those vehicles as full-fee-paying in this analysis. This paper does not address cross-subsidization between or within individual 2,000-pound weight classes.

Background

How important are subsidies in Oregon? The 2011 Oregon Highway Cost Allocation Study estimated that in the study year (2012), vehicles in Oregon would pay $1.126 billion in user fees. If no vehicles were subsidized, that amount would be $28.755 million, or 2.55 percent, higher. Of the $1.126 billion that would be collected, $1.117 billion would come from full-fee-paying vehicles, and $9.374 million would come from subsidized vehicles. Subsidized vehicles, on average, pay less than 25 percent of what they would pay if they were not subsidized ($9.374 million out of $38.149 million).

Which vehicles are subsidized? Most of the subsidized vehicles are publicly owned. These include cars, light trucks, vans, school buses, transit buses, and trucks owned by the State, counties, cities, school districts, and transit districts. In addition, farmers, non-profits, and tow truck owners pay reduced registration fees and non-commercial heavy trucks pay fuel taxes instead of weight-mile taxes. Publicly-owned school buses and transit buses that are not powered by gasoline pay neither fuel taxes or weight-mile taxes. Of the $28.775 million in subsidy, $17.839 million comes from reduced registration

fees and the remaining $10.936 million comes from not paying the weight-mile tax (or fuel tax in some cases).

How do other highway cost allocation studies deal with subsidies? The short answer is that none of them do. The most recent federal study, from 1997, did not make any adjustments for subsidies, but did examine the extent to which untaxed off-road vehicles (e.g., highway construction equipment, tractors, combines, etc.) use public highways. This makes sense, given that federal user fees do not make the kinds of exceptions that state user fees often do. Other states have applied the methods developed in the federal study and have not allocated subsidy amounts as a "cost" to be borne by full-fee-paying vehicles.

Why does Oregon do it differently? We have been unable to find anyone who remembers the reasoning behind Oregon's original decision to allocate the subsidy amount as a cost, or the reason for allocating it as a common cost rather than, for example, an overhead cost. One theory is that they considered what would happen if instead of having alternative fee schedules for some vehicles, all users paid full fees into the Highway Fund and then subsidized vehicles were paid a rebate out of the Highway Fund. In that case, the subsidy amount could be thought of as an expenditure from the Highway Fund and allocated as a "cost", the same as other expenditures. Like other expenditures not tied to the use of the highway system, such an expenditure would be allocated as a common cost.

In the 1999 Oregon study, led by Joe Stowers, the equity ratios were calculated for full-fee-paying vehicles only. In a 2010 email to John Merriss, Joe Stowers stated, *"The answer is pretty obvious if you follow basic HCAS principles – if users are forced to pay for the entire program, but some users are being subsidized, there is absolutely no reason for the full-fee-paying users to be picking up the subsidy that was created as a legislative outcome of the democratic process."* He also stated, *"In our 1999 Oregon Highway Cost Allocation Study, or any other HCAS we've ever done, I'm quite sure we were never asked to consider allocating any subsidy to any class of highway users or any other group. We were not asked to address this in an issue paper, and I don't recall any serious challenge to the way we handled this – i.e. by not analyzing or allocating any tax subsidy. I have never heard of any other state getting involved in allocating tax subsidies."*

In the 2001 Oregon Study, the Study Review Team requested that the subsidy amount be allocated to full-fee-paying vehicles as a common cost, as had been the practice prior to 1999. Dick Yates explained the mechanics of the Oregon approach, but did not defend its logic. Beginning with the 2001 study, the concept of "subsidized vehicles" was altered to include flat-fee-paying vehicles and the term "alternative-fee-paying vehicles" was adopted. In the 2011 study, flat-fee-paying vehicles were dropped from the definition of alternative-fee-paying vehicles on the grounds that if there was any difference between the revenues collected from those vehicles and the revenues that would be collected if they paid weight-mile taxes, that difference is unintentional as flat fees are supposed to result in the same revenue collections as the weight-mile tax.

How does the Oregon method work?

1. Revenues paid by each weight class are calculated for full-fee-paying vehicles only. The ratio of each of these to the total of all of them is the revenue share (numerator in the equity ratio) for each weight class.
2. For vehicles that don't pay the full fees, we calculate for each weight class both the amount they do pay and the amount they would pay if they paid full fees. The difference is the subsidy amount and the sum of the differences over all weight classes is what gets allocated as a cost to full-fee-paying vehicles.

3. Costs are allocated to all vehicles by weight class and then scaled by the ratio of full-fee-paying vehicle-miles traveled (VMT) to total VMT for each weight class. We assume that within each weight class, subsidized and unsubsidized vehicles impose the same costs per mile, so the result is the dollar value of costs imposed by full-fee-paying vehicles for each weight class.
4. We allocate the total subsidy amount from Step 2 to weight classes based on full-fee-paying VMT and add it to the amounts from Step 3. We then calculate each weight class' share of cost (the denominator in the equity ratio) as that amount divided by the sum of all those amounts.

What are the alternatives for handling subsidies in the Oregon study? There are three approaches that could be used:

1. Don't deal with subsidies at all. This is the federal method. Use the costs imposed and the revenues collected from all vehicles in each weight class regardless of the fee schedule they pay from.
2. Set subsidized vehicles aside and calculate equity ratios for full-fee-paying vehicles only, assuming that subsidized vehicles aren't supposed to be responsible for their full costs.
3. Add up the subsidy and allocate it to individual weight classes as a cost.
   - 3.1. Allocate it to full-fee-paying vehicles as a common cost (on the basis of VMT). This is the current Oregon method.
   - 3.2. Allocate it to full-fee-paying vehicles as overhead (in proportion to other allocated costs). This produces the same result as Alternative 2.
   - 3.3. Allocate it to full-fee-paying vehicles on the basis of the "subsidy cost" imposed by each class. This produces the same result as Alternative 1.
   - 3.4. Allocate it to full-fee-paying vehicles on some other basis (e.g., number of vehicles). This paper does not examine these possibilities.

What difference does it make? The table below shows the calculated equity ratios from the 2011 study data for each alternative.

2011 Study Equity Ratios			
	Current	Alt. 1	Alt. 2
Light	0.9954	1.0209	1.0029
Heavy	1.0089	0.9619	0.9944
Percent Change from Current			
	Current	Alt. 1	Alt. 2
Light	0.0%	2.6%	0.8%
Heavy	0.0%	-4.7%	-1.4%

While the equity ratios themselves will be different in different studies, we expect that the differences resulting from different approaches will be similar as long as the same vehicles receive the same relative fee reductions compared to full-fee paying vehicles. When presenting the results of recent prior highway cost allocation studies to legislative committees, the consultant team has stated that equity ratios in the range of 0.95 to 1.05 are "close enough", given the uncertainty inherent in their estimation, and do not require changes to user fees under the constitutional mandate for equity. By that standard, none of the alternatives examined here would change the results of the 2011 study enough to require changes. It is easy to imagine, however, that Alternative 1 might push the results of a future study from "close enough" to "not close enough" or vice versa.

Given that background, we examine the arguments in favor of each alternative. John Merriss of ODOT, who has participated in Oregon's highway cost allocation studies for over 20 years, prepared the argument in favor of Alternative 1. Carl Batten of the consultant

team, who has participated in the last six Oregon highway cost allocation studies prepared the argument in favor of Alternative 2. Nobody volunteered to defend the current method, so this paper presents the arguments made at the June 2012 Study Review Team meeting against changing the method abruptly.

Argument in Favor of Alternative 1

This paper takes the position that the first two alternatives both represent significantly more logical and defensible approaches to dealing with the subsidy amount than does the current Oregon method. This section presents the case for the first alternative, the approach used in the federal and other states' studies. The section following this one presents the case for second alternative.

Alternative 1 is argued to be the simplest and cleanest approach for the present and future Oregon studies. As stated above, it is the approach taken in the federal studies and other state-level highway cost allocation studies with which we're familiar.

In fairness, it can be argued that it makes sense for the federal studies to take the approach of ignoring subsidies for the reason that there are few exemptions or reduced rates at the federal level. But this same argument surely can't be made for the other states that have conducted HCASs, some of which subsidize vehicles operating in their state to an even greater extent than Oregon does.

The first option would therefore make the approach of the Oregon studies more consistent with that of the federal studies and the studies conducted in other states. By doing so, it would facilitate a more direct comparison of the results of the Oregon studies with those of other state-level studies. Additionally, it would do away with the several calculations needed to determine the subsidy amount and then assign it to the full-fee-paying vehicles on some arbitrary basis. This would simplify the highway cost allocation study model, as well as reduce the number and complexity of the tables required to present the study results.

Alternative 1 changes the focus of the equity ratio calculations from full-fee-paying vehicles to all vehicles and thus has the additional benefit of eliminating the arguably artificial distinction between vehicles based solely on whether they pay full fees or alternative fees. This distinction accomplishes little other than detracting attention from the more important consideration of differing highway cost allocation approaches and methodologies.

The list of factors determining the cost responsibility of the vehicles in any given declared gross weight class is lengthy. Among other things, it includes the sizes (lengths, widths and heights) of the vehicles in the class, the distribution of their actual operating gross weights, the numbers, types, weights and spacings of their axles, the types and widths of tires used, the suspension systems utilized, their speeds, and the condition of the pavements and types of roads they operate on.

One consideration notably absent from the above list, however, is whether the subject vehicles are full-fee-paying or alternative-fee-paying vehicles. The reason, of course, is that all else equal, the per-mile cost responsibility of the two types of vehicles is identical – the roads don't know the difference and the highway system costs occasioned by alternative-fee-paying vehicles are exactly the same as those occasioned by full-fee-paying vehicles. There is therefore little to be gained by maintaining this largely meaningless distinction based solely on the type of fees paid by one vehicle versus another.

In summary, while virtually any of the alternative approaches listed in the introductory section of the paper would increase the logic of the treatment of the subsidy amount in the Oregon highway cost allocation studies and thus represent a significant improvement over the current method, Alternative 1 is arguably the simplest and cleanest approach for the future. This option eliminates the artificial

distinction between vehicles based solely on what types of fees they pay and hence would make the Oregon studies more consistent with those conducted by the federal government and other states. It would have the further benefit of simplifying the highway cost allocation model, as well as the calculation and presentation of the results of the Oregon studies.

One final concern deserves noting before concluding this section with a critique of the arguments for a continued use of Oregon's current method of dealing with the subsidy amount. This concern arises from the fact that by not dealing with the subsidy at all, Alternative 1 makes the full-fee-paying vehicles in each declared gross weight class responsible for covering the subsidized vehicles in that same class.

The above means the full-fee-paying vehicles in those weight classes containing large numbers of subsidized vehicles could see a significant increase in their per-mile responsibility as compared to what they face under the current method. While true, in practice this is likely to be a minor concern at best because the process of fitting a curve to develop the study recommended tax and fee rates always involves a considerable amount of smoothing. Hence, the hit to any particular weight class will tend to be softened considerably by the curve-fitting process.

The justification for the current Oregon method of dealing with the subsidy amount has traditionally rested on two primary arguments. The first is consistency with the past – i.e., that this is the way it has always been done and, by implication, that this must therefore be the most correct way of doing it. On its surface, this argument is easy to dismiss. Just because something's always been done a certain way in the past doesn't make this the preferred way going forward. If there's a better, more rational and defensible way of doing anything, then it should be adopted without being constrained by how things were done in the past.

There is, however, admittedly an element of legitimate concern associated with this argument. This concern arises because a change from the current method of dealing with the subsidy amount to an approach of not dealing with it at all could have a not insignificant impact on the bottom-line study results, those used to determine whether adjustments to the existing tax and fee rates need to be made to comply with the constitutional mandate. Therefore, fairness would dictate a method be found to smooth out or otherwise ameliorate any impact on the study results caused solely by a change in the way the subsidy amount is handled. The final section of the paper discusses some ways this could be accomplished.

The second primary argument for the current method comes at the question of who should pick up the "cost" of the subsidies by examining the policy goals or supposed reasons for the granting of the various exemptions and reduced rates – for the most part, a "who benefits from the exemptions and reduced rates" analysis. Such an analysis will invariably assign a large part of the cost of the subsidies to the "general public", who by virtue of their numbers are predominantly motorists. Hence, the conclusion of the analysis that the subsidy amount should be viewed as a common responsibility of all road users and assigned.to the full-fee-paying vehicle classes on the basis of a general relative use measure such as VMT, which is what the current method does. The extreme version of this argument posits that the ultimate, end beneficiary of all trucking activity is the consumer, a.k.a. the general public, and this is therefore the group that should be assigned the costs imposed by all trucking activity, even if this group happens to be 94 percent motorists and only 6 percent truckers. The first part of this argument is valid, the second is not.

This is all well and good, and the above line of reasoning sounds convincing were it not for one rather large problem. This is that the Oregon studies do not rely on a benefits approach, but instead use a cost

occasioned approach in which the determination of cost responsibility is based strictly on the expenditures or costs occasioned by each vehicle class and nothing else. Under a strict cost occasioned approach, in fact, any discussion of benefits or who benefits from an expenditure of highway funds is irrelevant. Nevertheless, we all occasionally lapse into talking about which classes benefit from a particular expenditure of funds, despite knowing we really shouldn't do so.

A strict cost occasioned approach isn't concerned with the policy goals or stated reasons for an exemption or reduced rates, but instead takes these things as given and looks only at the uncompensated road costs resulting from the exemptions and reduced rates. Since the heavy vehicle classes typically occasion or give rise to roughly three-quarters of the total subsidy amount, a strict cost occasioned approach would assign a relatively large share of this amount back to the classes where it came from, which is exactly opposite to what the current method does.

The above discussion leads to the inescapable conclusion that there is really no convincing logic or rationale for the continued use of the current method in the Oregon HCASs. It is time to give serious consideration to replacing this method with an approach that is significantly more logical and defensible. Of the various alternatives discussed in this paper, Alternative 1 appears to be the simplest and cleanest approach for the future of the Oregon studies.

Argument in Favor of Alternative 2

As noted above, Oregon's current method for handling subsidies does not fit well with the cost-occasioned approach. There is no reason to believe that the costs imposed by a vehicle will vary because of the fee schedule it pays from. Alternative 2 solves that problem just as well as Alternative 1. The denominator of the equity ratio, which is the share of total costs that are imposed by that vehicle class, is exactly the same in Alternative 2 as in Alternative 1.

Consistency with the federal method also is listed as an advantage of Alternative 1. It can be argued that Alternative 2 is equally consistent with the federal method. If Alternative 2 were applied in the federal study, the result would be unchanged because all vehicles are full-fee-paying vehicles as far as federal user fees are concerned.

The arguments in favor of Alternative 1 list consistency with other state studies as an advantage. They also point out the because something has been done wrong in the past is not a good reason to do it wrong in the future. One could also argue that because something has been done wrong in other states is not a good reason to do it wrong in Oregon. If it can be demonstrated that Alternative 2 is superior at the state level, being consistent with other states should not be an overriding concern.

Alternative 2 determines the extent to which vehicles that pay full fees are paying their fair share. Alternative-fee-paying vehicles account for 2.4 percent of VMT and a similar percent of numbers of vehicles. They pay reduced fees because the Oregon Legislature intended for them to be subsidized, i.e., to pay less than their fair share. The fact that this small minority of vehicles pay less than their fair share, as they are intended to do, should not affect the equity ratios attributed to the vehicles that pay full fees. The proper approach is to set them aside and calculate the numerator of the equity ratio, which is the share of total revenues paid by that vehicle class, using only revenues paid by vehicles that are intended to pay their fair share. That way, vehicles that are intended to pay their fair share, do so, and are not asked to make up for those that are not intended to pay their fair share, in their own or in any other weight class.

Proponents of Alternative 1 argue that the effect of imposing the "cost" of subsidies on other vehicles in the same weight class is unimportant because of curve smoothing in the development of detailed weight-mile

rate schedules. That's mostly true within the broader class of heavy trucks, but when there are only two classes of vehicles being compared, as for the constitutionally-required comparison of light and heavy vehicles, it has a non-trivial effect that is not ameliorated by curve-fitting. As noted above, most of the dollar amount of subsidy (over 80 percent in the 2011 study) is enjoyed by heavy vehicles. Curve-fitting within weight-mile tax rates doesn't change that.

One way to think of the differences between the alternatives is to start with the equity ratio for full-fee-paying vehicles and look at how each alternative changes it. Alternative 2 doesn't change it at all. Alternative 1 adds 80 percent of the subsidy amount to the actual costs imposed by full-fee paying heavy vehicles, reducing their equity ratio by 3.25 points (3.28 percent). The current method adds 94 percent of the subsidy amount to the actual costs imposed by full-fee-paying light vehicles, increasing the equity ratio for heavy vehicles by 1.45 points (1.46 percent).

Alternative 2 is simpler than the current method and, since Alternative 2 is a step along the way to calculating the final result under the current method, modifying the model to use Alternative 2 would consist of simply not completing the additional steps. The existing model already reports the VMT, costs, and revenues associated with full-fee-paying vehicles, along with their equity ratios before the subsidy adjustment, which are the results that would be reported as final if Alternative 2 were adopted.

In summary, Alternative 2 measures the extent to which vehicles that are supposed to pay their fair share do pay their fair share. It is simple, logical, and consistent with the federal method. Oregon should adopt it.

Argument in Favor of Retaining the Current Method (Alternative 3(a))

The argument in favor of retaining the current method is that it has been used in the last six Oregon studies, which have formed the basis for the user-fee rate schedules now in effect. Changing the method for treating subsidies in the highway cost allocation process might result in those rates being deemed inequitable, even if nothing else changed.

Recommendation

As noted above, neither Alternative 1 or Alternative 2 would have changed the results of the 2011 study sufficiently to warrant recommending that the Legislature alter current-law fees to achieve equity. Alternative 1 would have come close, however, indicating that the concerns behind some interested parties' reluctance to abandon the current method are legitimate.

Alternative 2 would have had very little effect on final equity ratios in the 2011 study and is likely to have very little effect in the 2013 study. It would, however, remove a potential criticism of the study. One could make the case (and some have) that the current method unfairly biases the study results in favor of heavy vehicles. Adopting Alternative 2 would eliminate that criticism of the study without significantly changing its conclusion.

The 2013 study consultant (ECONorthwest) recommends that Oregon move toward adopting Alternative 2. If Alternative 2 results in equity ratios nearer to 1.0 than those from the current method, or if the resulting equity ratios are within the range of 0.975 to 1.025, we recommend reporting only the results of using Alternative 2. Otherwise, we recommend reporting the results of both the current approach and Alternative 2 and then splitting the difference and reporting the average of the two approaches as the final result, with an appropriate explanation to the Legislature.

FINAL REPORT

for

Oregon Highway Cost Allocation Study

October 12, 2012

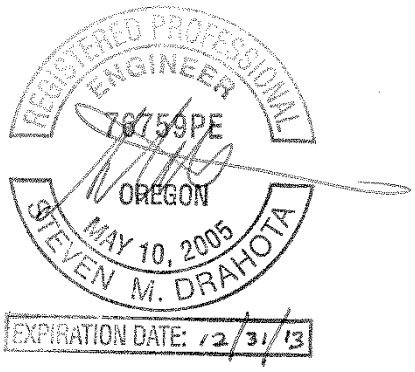

HDR Engineering, Inc.
1001 SW 5th Avenue
Portland, OR 97204

Table of Contents

1. EXECUTIVE SUMMARY 1

2. PURPOSE AND NEED 1

3. DESIGN PARAMETERS 1

3.1 Design Vehicles 1

3.2 Span and Bridge Types 2

3.3 General Assumptions 3

4. HDR DESIGN ASSUMPTIONS 4

4.1 Superstructure 4

4.2 Substructure 5

4.3 Cost Estimating 5

5. RESULTS AND CONCLUSIONS 5

5.1 45-foot-span Bridge with Precast Prestressed Voided Slabs 6

5.2 80-foot-span Bridge with Precast Prestressed Box Beams 7

5.3 150-foot-span Bridge with Precast Prestressed Bulb-T Girders 7

5.4 Comparison with the 2002 Bridge Cost Allocation Study 7

6. AEPPENDIX A 28

List of Tables

Table 1: Bridge Configuration: 45-Foot Simple Span with Precast Prestressed Slabs 19

Table 2: Bridge Configuration: 80-Foot Simple Span with Precast Prestressed Box Beams 20

Table 3: Bridge Configuration: 150-Foot Simple Span with 84-Inch Prestressed Bulb-T 21

Table 4: Bridge Configuration: 45-Foot Simple Span with 18-Inch Precast Prestressed Slabs 22

Table 5: Bridge Configuration: 45-Foot Simple Span with 21-Inch Precast Prestressed Slabs 23

Table 6: Bridge Configuration: 45-Foot Simple Span with 26-Inch Precast Prestressed Slabs 24
Table 7: Bridge Configuration: 80-Foot Simple Span with 33-Inch Precast Prestressed Box Beams 25
Table 8: Bridge Configuration: 80-Foot Simple Span with 39-Inch Precast Prestressed Box Beams 26
Table 9: Bridge Configuration: 80-Foot Simple Span with 42-Inch Precast Prestressed Box Beams 27

List of Figures

Figure 1: Bridge Costs Per Square-Foot of Deck Area 10
Figure 2: Design Vehciles 11
Figure 3: Statewide Bridge Data 12
Figure 4: Plan and Elevation of Typical 45-Foot Span Structure 13
Figure 5: Plan and Elevation of Typical 80-Foot Span Structure 14
Figure 6: Plan and Elevation of Typical 150-Foot Span Structure 15
Figure 7: Typical Cross Section of 45-Foot Span Structure 16
Figure 8: Typical Cross Section of 80-Foot Span Structure 17
Figure 9: Typical Cross Section of 150-Foot Span Structure 18

1. Executive Summary

HDR Engineering, Inc. (HDR) was retained as a subconsultant to ECONorthwest to prepare a Bridge Cost Allocation Study, in support of a larger Highway Cost Allocation Study funded by the State of Oregon. The purpose of the Bridge Cost Allocation Study is to estimate the incremental bridge construction costs apportioned to different types of design vehicles. For this study, HDR evaluated bridges of three different simple-span lengths using six different non-concurrent truck loads to estimate the lowest construction cost for a total of eighteen hypothetical bridge configurations. A number of variables affected the final outcomes, the most significant of which were girder type, bridge length, truck type, and recent historical costs for the items of work associated with constructing the bridges.

The estimated square-foot construction costs for the most economical structure configurations, as functions of span length and design truck, are presented graphically in Figure 1.

2. Purpose and Need

The State of Oregon bases its system of road user taxation on the results of highway cost allocation studies (HCAS). To date, the State has completed eighteen such studies, with the first dating back to 1937. Since 1999, the Oregon Constitution has required that a study be conducted biennially and that highway user tax rates be adjusted, if necessary, to ensure "fairness and proportionality" between light and heavy vehicles.

A Bridge Cost Allocation Study was last prepared in 2002. At that time, the Oregon Department of Transportation (ODOT) mandated that the design of new bridges be carried out in accordance with the *AASHTO Standard Specifications for Highway Bridges, 16th Edition*. This AASHTO document employed a mix of allowable stress design (ASD, sometimes referred to as "service load design"), and load factor design (LFD). The AASHTO design code has since been revised to a calibrated load and resistance factor (LRFD) design code.

This study represents a full update to the 2002 Bridge Cost Allocation Study and incorporates current ODOT and AASHTO design codes and procedures, recent historical construction costs, and updated vehicle loads based on contemporary legal and permit load configurations. The final report for the previous study is presented in Appendix A. Where applicable, the final report prepared by HDR mirrors the 2002 report.

3. Design Parameters

Design parameters for the study were agreed to at the July 23, 2012 and September 12, 2012 Study Review Team (SRT) meetings, with input from members of ODOT, and are described in the following subsections.

3.1 Design Vehicles

At the July 23, 2012 SRT meeting, it was agreed that the following vehicles would be considered in the analysis:

- Basic (10 kips[1] gross vehicle weight [GVW])
- Type 3 (50 kips GVW)
- Type 3S2 (80 kips GVW)
- Type OR-CTP-2B (105.5 kips GVW)
- Type OR-STP-4C (150.5 kips GVW)
- Type OR-STP-4E (258 kips GVW)

Axle loads and spacing of the design vehicles are shown in Figure 2.

3.2 Span and Bridge Types

Upon project initiation, HDR performed an assessment of bridge span configurations and bridge material types constructed statewide since 2002. This population included 770 bridges, with 342 coming from ODOT's inventory and 428 from the Local Agency inventory. From this assessment, it was found that 68% of all bridges constructed in the last 10 years were comprised of single-span structures (that is, a bridge with only one span supported by abutments at either end). These single-span bridges ranged from 20 feet in length to over 230 feet in length, with almost 95% of these bridges having a span length between 20 and 150 feet.

Upon further inspection of the 770 bridges, it was also found that 83% of this population consisted of some form of a precast, prestressed concrete girder[2]. Of this 83%, over half of the bridges consisted of either a precast slab or precast box beam.

At the July 23, 2012 SRT meeting, HDR recommended that three single-span bridge lengths (45, 80, and 150 feet) be considered for analysis in this study. These span lengths were selected based on:

- Their relative occurrence within the family of single-span bridges constructed since 2002 (as depicted in Figure 3).
- The understanding that the most economical choices for these bridges would either be prestressed concrete slab or box beam girders for the shortest two span lengths (45 and 80 feet), or precast girders for the longest span length (150 feet).

Based on these span lengths, it was further agreed that the following girder[3] types would be evaluated for each vehicle:

- Simple Span, 45 feet long:
  - 18-inch precast prestressed concrete voided slabs (ODOT Standard Drawing BR410) with cast-in-place concrete composite deck
  - 21-inch precast prestressed concrete voided slabs (ODOT Standard Drawing BR415) with cast-in-place concrete composite deck

[1] 1 kip = 1,000 pounds

[2] Throughout this report, the term "girder" is used to refer generically to precast prestressed concrete voided slabs, box beams, and bulb-T girders, except where a girder being discussed is specifically identified as a bulb-T girder.

[3] See http://www.oregon.gov/ODOT/HWY/ENGSERVICES/pages/bridge_drawings.aspx for links to all ODOT Standard Drawings (Bridge) referenced here and in subsequent sections.

- 26-inch precast prestressed concrete voided slabs (ODOT Standard Drawing BR420) with cast-in-place concrete composite deck

- Simple-Span, 80 feet long:
  - 33-inch precast prestressed concrete boxes (ODOT Standard Drawing BR425) with cast-in-place concrete composite deck
  - 39-inch precast prestressed concrete boxes (ODOT Standard Drawing BR430) with cast-in-place concrete composite deck
  - 42-inch precast prestressed concrete boxes (ODOT Standard Drawing BR435) with cast-in-place concrete composite deck
- Simple Span, 150 feet long:
  - 84-inch Bulb-T precast prestressed concrete girders (ODOT Standard Drawing BR310) with cast-in-place concrete composite deck

Although each girder type was evaluated in conjunction with each truck type, the final construction cost estimate for a given pairing of span length and truck type only reflects the girder type that resulted in the lowest estimated construction cost.

3.3 General Assumptions

Additional assumptions agreed to at the July 23, 2012 and September 12, 2012 SRT meetings were as follows:

- Design for a total roadway width of 44 feet (two 12-foot-wide travel lanes and two 10-foot-wide shoulders)
- ODOT standard type "F" concrete rail for all bridges (ODOT Standard Drawing BR200)
- ODOT standard end panels on all bridges except for those associated with the Basic Vehicle (ODOT Standard Drawing BR165)
- No skew
- Tangent alignment
- Pile supported foundations
- Design is in accordance with *AASHTO LRFD Bridge Design Specification, 5th Edition* (*AASHTO LRFD*) and the November 2011 *ODOT Bridge Design and Drafting Manual* (*ODOT BDDM*)
- Design for Strength II limit state for all vehicles
- Longitudinal analysis of composite slab-beam member for interior beams; beam spacing to provide similar demands on exterior beams
- Structure is located in Eugene, Oregon (for purposes of establishing girder hauling costs, regional construction costs, and code-mandated effects of climate on prescribed materials)
- No design calculations for the concrete deck slab

The span lengths and superstructure types considered were selected following a review of ODOT's bridge database for the most common span configurations constructed in the last 10 years for ODOT and local agencies throughout the State of Oregon. The investigation showed that single-span structures

were more frequently built than multi-span structures and that precast prestressed concrete was the predominant material used.

Each precast girder type evaluated is feasible over a limited range of span lengths. For example an 18-inch voided slab is only practical for spans ranging from about 22 to 50 feet. Generally speaking, voided slabs are most efficient for short spans (e.g., 45 feet), voided box beams for spans of moderate length (e.g., 80 feet), and bulb-Ts for long spans (e.g., 150 feet). Multiple ODOT standard slabs and box beams were investigated to determine which sections would be most economically efficient, as there is considerable overlap in the feasible span range for the sections in a given family of girders. There is less overlap in the 150-foot span range among standard bulb-T section, and thus only the standard 84-inch-deep section was investigated.

4. HDR Design Assumptions

In addition to the design parameters established at the July 23, 2012 SRT meeting, HDR used the following assumptions to ensure cost consistency between all span designs:

4.1 Superstructure

- Adjacent slabs and box beams will have 5-inch composite concrete decks
- Spread slabs, box beams, and girders will have an 8-inch composite concrete deck
- Transformed girder section properties will not be used in design/analysis
- The following material densities shall be used for determining dead loads:
  - Asphalt Concrete Wearing Surface = 150 pcf
  - Normal weight concrete = 150 pcf
  - Prestressed girder concrete = 155 pcf
- Concrete diaphragms are placed at:
  - 15-foot centers for 45-foot slab spans
  - 10, 30, 50, and 70 feet for 80-foot box spans
  - 37.5-foot centers for 150-foot BT84 spans
- Standard 30-foot end panels to be used for heavy truck designs
- Concrete Class HPC4000 shall be used for bridge deck concrete
- Design for 2 inches of future asphalt concrete wearing surface on all structures
- Design for two 100 plf utility lines suspended from the superstructure
- Prestress losses calculated based upon the provisions of *AASHTO LRFD* Article 5.9.5.4
- 28-day concrete strength for slab and box beams = 7.0 ksi
- 28-day concrete strength for bulb-T girders = 9.0 ksi
- Concrete strength at release shall not be greater than 80% of the 28-day concrete strength

- All bridges will be jointless (semi-integral end bents)
- No pedestrian loading is considered
- No "training" of vehicles; only one vehicle assumed in a lane at a time
- Verify that all designs meet *AASHTO LRFD* Service I and Service III limit states
- $0.0948\sqrt{f'_c}$ ksi tension allowed in girders under Service III limit state

4.2 Substructure

- 12.75 × 0.375 end-bearing pipe piles with a 150-kip factored resistance at 40-foot lengths
- 12-inch-thick minimum wing wall thickness
- 2H:1V embankment slope normal to the end bents to determine wing wall lengths
- Active earth pressure coefficient, $K_a = 0.3$
- 3 feet of soil used for live load surcharge on wing walls
- 3-foot-wide × 6-foot-tall pile cap size (height selected to conform to ODOT BDDM requirements for providing access for inspection), with the lower 2 feet buried
- Pile caps are rigid and distribute load equally to all piles
- Foundation concrete Class 4000 for pile caps
- General structural concrete Class 3300 for wing walls
- No slope paving or riprap

4.3 Cost Estimating

- All bid prices, except those of the precast prestressed elements, are based upon actual published bid prices from the ODOT Bridge Cost Data publications for the years 2009 through 2011.
- HDR contacted Knife River Corporation (Knife River), to request cost to furnish the various precast prestressed girders. Knife River's facility in Harrisburg, Oregon, fabricates a significant proportion of the precast prestressed girders in the State. Cost estimates for the girders, as presented in this report, were generated by multiplying the costs provided by Knife River by 125 percent to account for contractor markup related to overhead and profit. HDR also escalated Knife River's basic values to reflect installation costs related to labor and crane rental and operation costs based upon data taken from *R.S. Means Heavy Construction Cost Data 2005*[4], considering a nominal annual inflation of 2% for the period from 2005 through 2012.

5. Results and Conclusions

The design vehicles used in the study are shown in Figure 2. Sketches showing conceptual plan and elevation views of the 45-foot, 80-foot, and 150-foot span designs for each design vehicle are shown in Figure 4, Figure 5, and Figure 6, respectively. Sketches reflecting the most economical typical cross

[4] Spenser, Eugene R., ed, *R.S. Means Heavy Construction Cost Data 2005*, 19th ed., Kingston, MA: Reed Construction Data, 2004.

sections for the 45-foot, 80-foot, and 150-foot span designs for each design vehicle are shown in Figure 7, Figure 8, and Figure 9, respectively.

The construction cost estimate summaries for bridges that can carry each of the six live load vehicles are shown in Tables 1, 2, and 3 for the 45-foot, 80-foot, and 150-foot span arrangements, respectively. These results represent the most economical designs of all of the options considered. The tables show the separate bid items and break down the costs into substructure, superstructure, and total structure costs. Tables 1, 2, and 3, also list the costs per square foot of deck area for structure as a function of vehicle type.

The square foot cost summaries from Tables 1, 2, and 3 are compared graphically in Figure 1. Figure 1 demonstrates the relationship of the square foot costs of the three bridge spans to the different vehicles. This graph in this figure indicates that there is a large increase in structure cost as vehicle weight increases from the Basic to the Type 3. The cost trend line is flat from the Type 3 to OR-CTP-2B vehicle for the 45-foot and 80-foot span options. For the 45-foot span structures, the cost trend line increases slightly with the addition of the heavier OR-STP-4C vehicle and remains unchanged for the OR-STP-4E vehicle. There is a slight increase in cost of the 80-foot span bridge when the progressively heavier OR-STP-4C and OR-STP-4E vehicles are considered. The cost trend line for the 150-foot span bridge is similar to that of the 45-foot and 80-foot span bridges.

For all of the notional bridges evaluated in this study, the bridge deck was not designed. Instead it was simply assumed to be 8 inches thick, as agreed to at the July 23, 2012 SRT meeting. This assumption would not likely hold up in a formal design for the widely-spaced girder alternatives. However, the additional bridge deck concrete required for the formally-designed widely-spaced girder alternatives would not be significant as a factor in the final construction cost estimates.

Results for the three span arrangements differed slightly, and commentaries for each arrangement are provided below.

5.1 45-foot-span Bridge with Precast Prestressed Voided Slabs

Three different depths of precast prestressed voided slab sections (18 inches, 21 inches, and 26 inches) were investigated to ensure that the most economical bridge costs were obtained. Tables 4, 5, and 6 summarize the estimated construction cost per square foot for bridges constructed with 18-inch, 21-inch, and 26-inch slabs, respectively. When comparing the costs of constructing a 45-foot span for a specific vehicle from each of the slab types, the unit costs varied by no more than $12 per square foot of deck area, with the 21-inch slabs providing the most cost-effective solution for the Basic vehicle, and the 26-inch slabs providing the most cost-effective solution for all of the heavy vehicles.

There were significant potential cost savings estimated when taking into account the ability to reduce the number of slabs required when using the 26-inch slabs instead of the shallower sections. With fewer slabs required, the total dead load of the superstructure was reduced, resulting in fewer pipe piles in the foundation. Additionally, the cost to furnish four 26-inch slabs 45 feet in length is less than the cost to furnish either six 18-inch or five 21-inch slabs. There were slight increases in the costs associated with several of the other bid items (most notably, the deck reinforcement) when designing the 26-inch slabs; however, these increases in cost were more than offset by the cost savings mentioned previously.

For precast prestressed slabs of a given depth, the number of slabs required generally remained constant with an increase in design vehicle weight. It was observed that for the 45-foot span, not all of

the axles for the four heaviest trucks could load the bridge at the same time. Therefore, for the heavier vehicles, the 45-foot span behaves as if it were carrying vehicles of a lesser total weight.

5.2 80-foot-span Bridge with Precast Prestressed Box Beams

Three different depths of precast prestressed box beam sections (33 inches, 39 inches, and 42 inches) were investigated to ensure that the most economical bridge costs were obtained. Tables 7, 8, and 9 summarize the estimated construction cost per square foot for bridges constructed with 33-, 39-, and 42-inch slabs, respectively. When comparing the costs of constructing an 80-foot span for a specific vehicle from each of the box types, the unit costs varied by no more than $13 per square foot of deck area. For the 80-foot span, the 42-inch box beam section was the most cost-effective girder for all vehicles except the OR-STP-4C vehicle. For the OR-STP-4C vehicle, the 39-inch box beam section was the most cost effective girder because the same number of box beams was required when considering either the 39- or 42-inch box beam section for the 80-foot span design.

5.3 150-foot-span Bridge with Precast Prestressed Bulb-T Girders

Only the 84-inch-deep precast prestressed bulb-T girder was considered for the 150-foot span bridge. Table 3 summarizes the estimated construction cost per square foot for bridges constructed with the 84-inch bulb-T. Figure 1 shows that there is a large increase in structure cost as vehicle weight increases from the Basic to the Type 3 for the 150-foot-span, however the increase is less than that for the 45-foot or 80-foot spans. The cost trend line is flat from the Type 3 vehicle to the Type 3S2. There is a slight increase in cost of the 150-foot bridge when the progressively heavier OR-CTP-2B and OR-STP-4E vehicles are considered. The difference in cost between the OR-STP-4C and OR-4E vehicles is slight. Unlike the 45-foot span structure, all of the design vehicles are short enough to fully occupy the 150-foot bridge. As can be seen in Figure 1, the 150-foot bridge is the least expensive bridge on a square-foot-of-deck-area basis.

The possibility of using 24-inch diameter pipe piles (PP 24 x 0.5) instead of 12-inch diameter pipe piles (PP 12.75 x 0.375) was investigated for this bridge in an attempt to reduce substructure cost. Based on prior experience with similar projects, it was assumed that each 24-inch pile would be 60 feet long and that the factored resistance per pile would be 400 kips. However, it was quickly recognized that the 24-inch piles would be almost four times as expensive to furnish as the 12-inch piles. Therefore, a savings in the cost to furnish piles could only be realized if 75% of the piles could be eliminated by increasing the pile size, and this was simply not possible structurally. Similarly, based on the Oregon Bridge Cost Data for the last several years, the cost to drive a 24-inch pile is about double that of the smaller 12-inch pile. For these reasons, consideration for 24-inch piles as a cost-saving measure was dropped and only the 12-inch piles appear in the cost estimate.

5.4 Comparison with the 2002 Bridge Cost Allocation Study

The 2012 and the 2002 bridge cost allocation studies are similar in that both studies identified the most cost-effective bridge designs for specific combinations of bridge length and design vehicle, determined by applying the contemporary bridge design code and recent construction unit cost data. As a general conclusion, both studies determined that the unit square-foot cost (based on deck area) for a simple span bridge decreases with an increase in span length. It is also observed that the square foot costs are more dependent on a vehicle's axle group loading applied to the bridge than the total weight of the vehicle. This is why, as can be observed in Figure 1, a square foot cost plateau is reached as the total vehicle weights increase. This phenomenon is similar to that found in the 2002 study.

In general, the most significant difference between the 2002 and 2012 studies was the magnitude of the bridge square foot costs. Despite the changes in the study methodology (discussed further below), the change in the square-foot prices resulted predominantly from unit cost changes driven by market conditions rather that an increase in girder quantity or depth from our analysis.

Study Changes (General): In the ten years since the 2002 bridge cost allocation study was conducted, a major revision to the design code has been implemented. In addition, the two studies incorporated different design vehicles, span lengths, girder types, and historical costs. Although both studies included bridge end panels in the cost estimates for all but the Basic Vehicle bridges, the 2012 study assumed longer end panels for consistency with the current ODOT criteria. For the 2012 study, the overall bridge width for the Basic Vehicle design cases was increased to 46´-8´´ (vs. 40´-8´´ used in the 2002 study) to provide more consistency between the various bridge configurations evaluated. The bridge widths for the other vehicle design cases remained unchanged.

Design Code Change: There are many subtle differences between the current and previous design codes, but three of the more significant ones relate to the treatment of applied loads for certain aspects of the design. Although both codes require the designer to scale up the basic design loads before comparing load effects to bridge member capacities, the prescribed scale factors differ between codes. There is also a difference in a secondary scaling factor related to the vehicle loads specifically, the impact or dynamic allowance factor, which can vary under the older code, yet is a constant under the current code. Finally, the two codes differ significantly in their respective approaches to determining how to distribute the vehicle loads to the individual girders. A detailed side-by-side comparison of the cumulative effects of these changes is beyond the scope of this study, but it is possible that the "most efficient" design for a given span/girder/vehicle combination would be different if separate evaluations were carried out using both codes.

The provisions of the current design code for evaluating the bending strength/capacity of prestressed girders are nearly identical to those of the older design code. The two codes differ significantly in their approaches to calculating the shear strength/capacity of prestressed girders, but this was not found to be a controlling factor in the selection of girders for the 2012 study.

Vehicle Weight Changes: Historically, the weights of vehicles on the nation's highways have increased with time. Generally speaking, the design vehicles considered in the 2012 cost study are heavier than those considered in the 2002 study, as can be seen by comparing Figure 2 in this study with Figure 1 in Appendix A. To reflect the increase in passenger vehicle weight, the Basic Vehicle weight has been increased from 8 to 10 kips. The Type 3 and Type 3S2 vehicle weights remained unchanged. The Permit 2 and Permit 4 vehicles used in the 2002 study are no longer included and have instead been replaced by the contemporary notional permit vehicles OR-CTP-2B, OR-STP-4C, and OR-STP-4E.

Span Configuration Changes: The 2002 study investigated 100- and 150-foot single-span bridges, while the 2012 study investigated 45-, 80-, and 150-foot single-span bridges. The 2002 study concluded that the unit cost of a bridge per square foot of deck for a simple span bridge decreases with increasing span length. Given this trend, and the fact that Figure 3 shows that more than 70% of the single-span bridges built in Oregon since 2002 have been less than 100 feet in length, it was decided that the 2012 study would focus on 45- and 80-foot single-span bridge lengths rather than a 100-foot bridge length. This results in a larger population of estimated unit costs for shorter span bridges and is more reflective of recent historical trends.

The 2002 study also included an evaluation of a 150-foot-long, multi-span bridge configuration. This Study did not include a multi-span analysis because we believe that the cost allocation results would be similar to simple spans results. Further, after discussion with the ODOT Bridge Section, it was found that only three replacement bridges were included in the 2013-2015 STIP and only about ten multi-span structures were identified for construction between 2013 and 2014 from Local Agencies. Because of the dearth of multi-span bridges on the near horizon, we did not feel that a multi-span-bridge analysis was warranted at this time.

Construction Unit Cost Changes: Construction costs are influenced by several factors, including raw material costs, transportation costs, labor costs, equipment costs, contractor markup, and general economic conditions. It is beyond the scope of this study to attempt to isolate and adjust these factors individually. Instead, both studies relied heavily on recent historical construction cost data published by ODOT. The 2002 study drew from ODOT's cost data from 2001, whereas the 2012 study drew from ODOT's cost data for the years 2009 to 2011. The cost data itself is not intended to represent guaranteed prices, but instead is a record of bid prices submitted by contractors for standard items of work in the previous years. There is often a considerable amount of variation in tallied bid costs for similar items of work from project to project and between contractors. Ultimately, the decision regarding the unit prices to be used in the development of the estimates is a judgment call predicated on past experience and consideration for the distribution of the data within the ODOT cost data records.

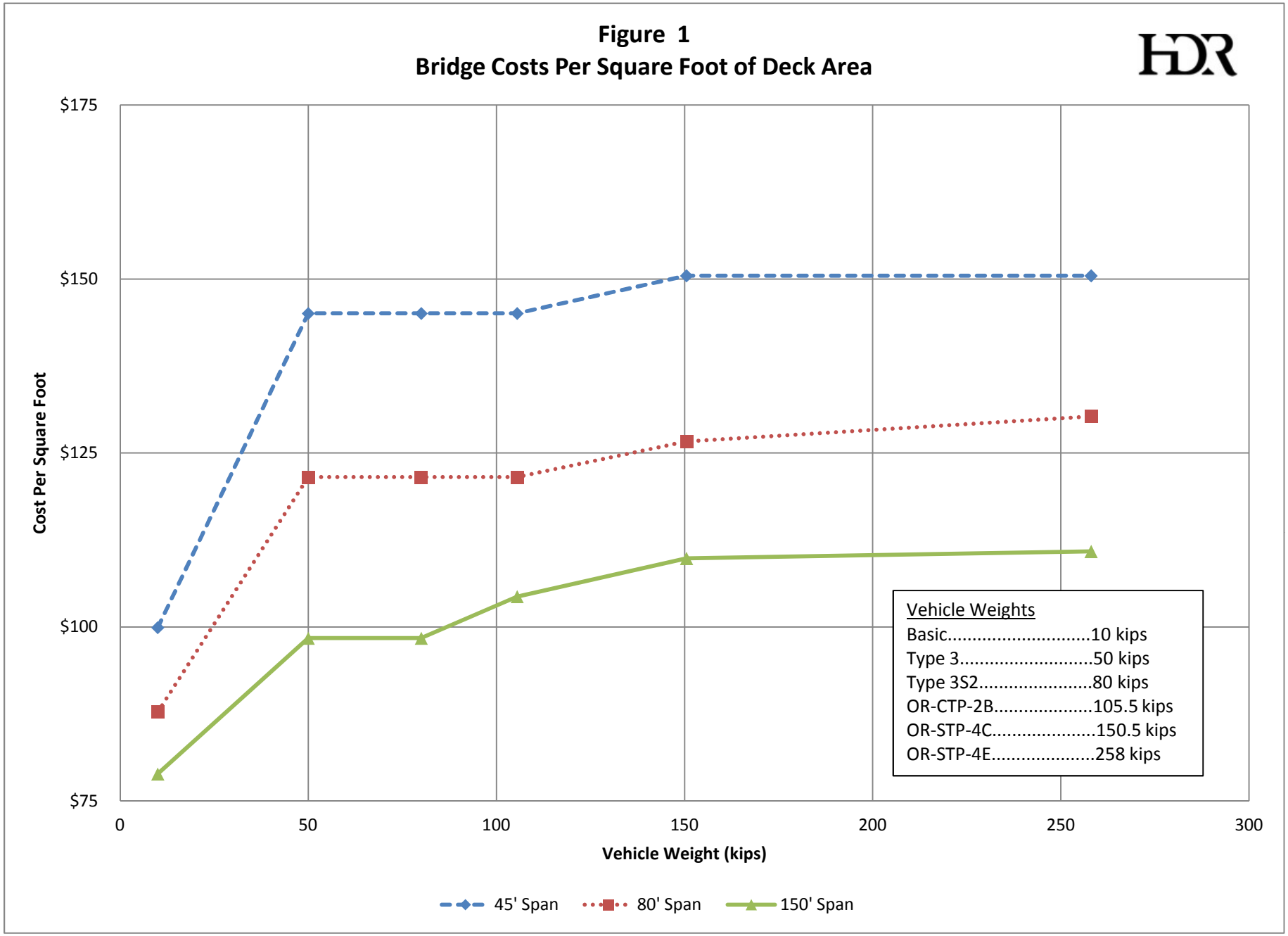
Figure 1
Bridge Costs Per Square Foot of Deck Area
HDR
$175
$150
$125
$100
$75
Cost Per Square Foot
0
50
100
150
200
250
300
Vehicle Weight (kips)
Vehicle Weights
Basic.....10 kips
Type 3.....50 kips
Type 3S2.....80 kips
OR-CTP-2B.....105.5 kips
OR-STP-4C.....150.5 kips
OR-STP-4E.....258 kips
45' Span
80' Span
150' Span

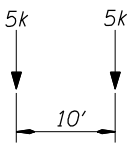

BASIC

2 Axle Vehicle
Gross Weight = 10 kips

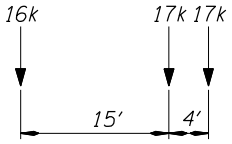

TYPE 3

3 Axle Vehicle
Gross Weight = 50 kips

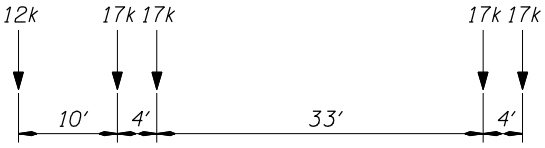

TYPE 3S2

5 Axle Vehicle
Gross Weight = 80 kips

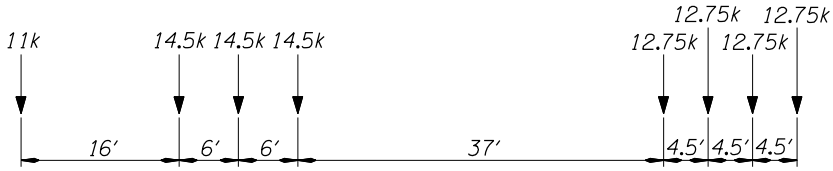

OR-CTP-2B

8 Axle Vehicle
Gross Weight = 105.5 kips

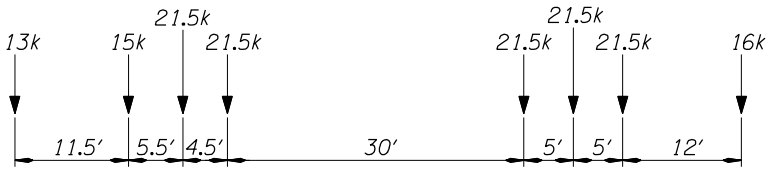

OR-STP-4C

8 Axle Vehicle
Gross Weight = 150.5 kips

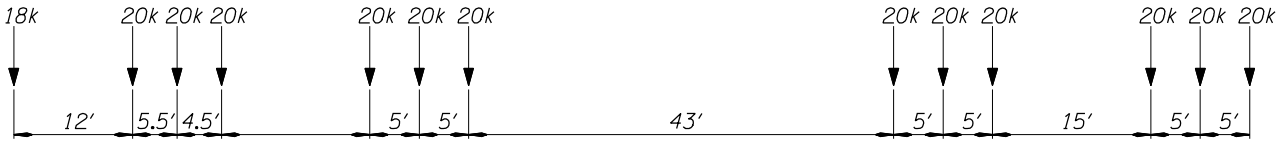

OR-STP-4E

13 Axle Vehicle
Gross Weight = 258 kips

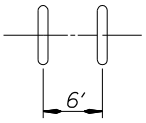

WHEEL LINE SPACING

All Vehicles

DESIGN VEHICLES

OREGON HWY COST ALLOCATION STUDY

HDR Engineering, Inc.

FIG. 2 OF 9

Figure 3. Statewide Bridge Data: Quantity of Single-Span Bridges Built Since 2002 (By Length)

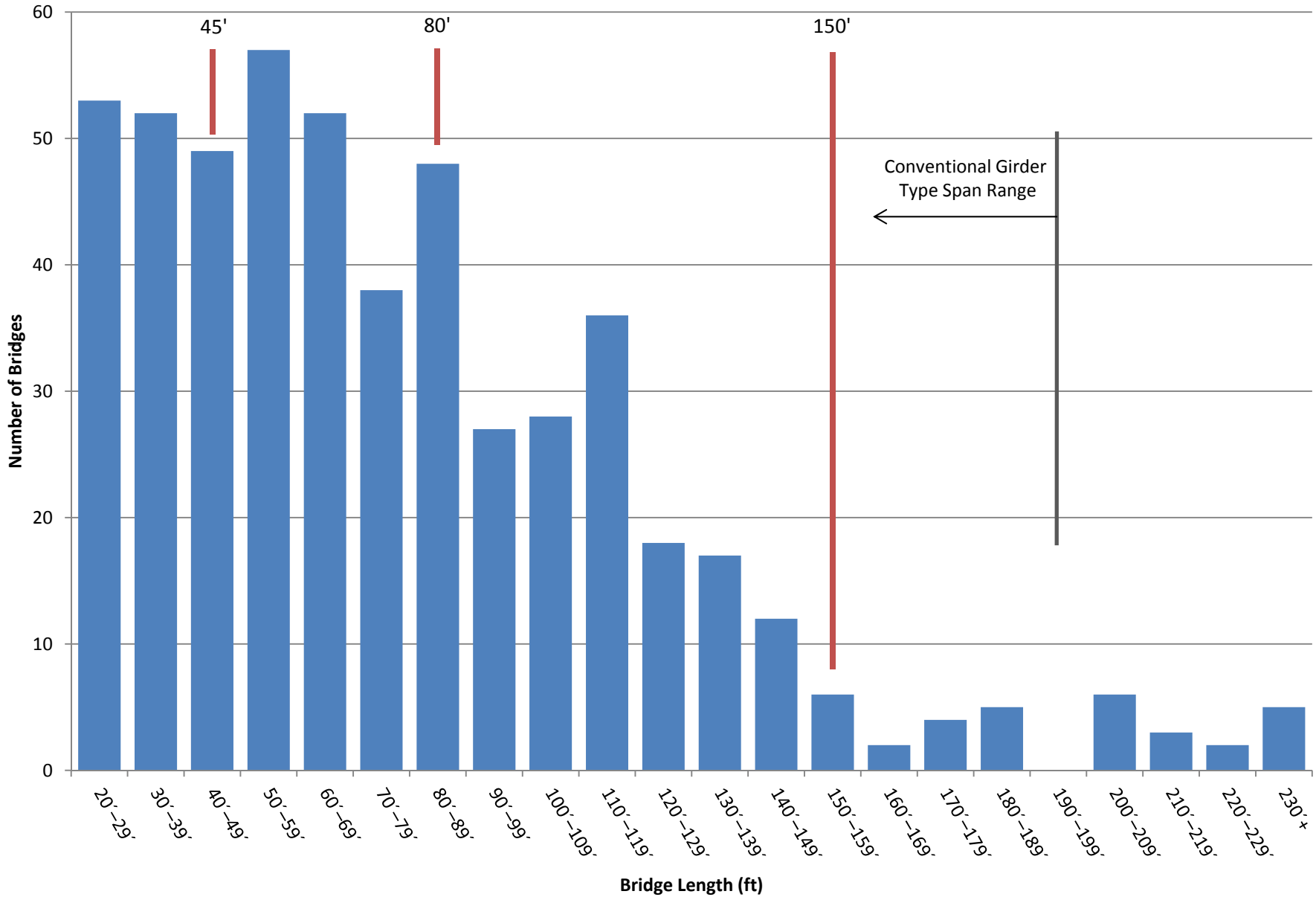

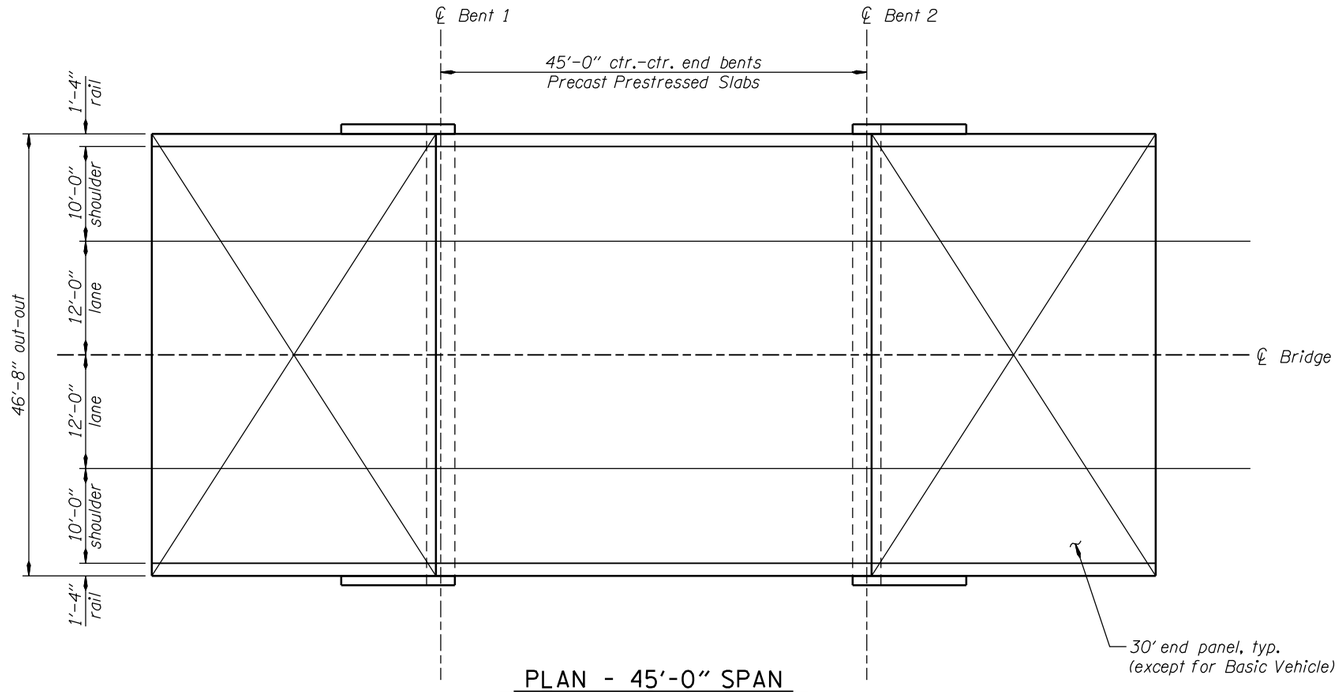

PLAN - 45'-0" SPAN

Scale: 1/8" = 1'-0"

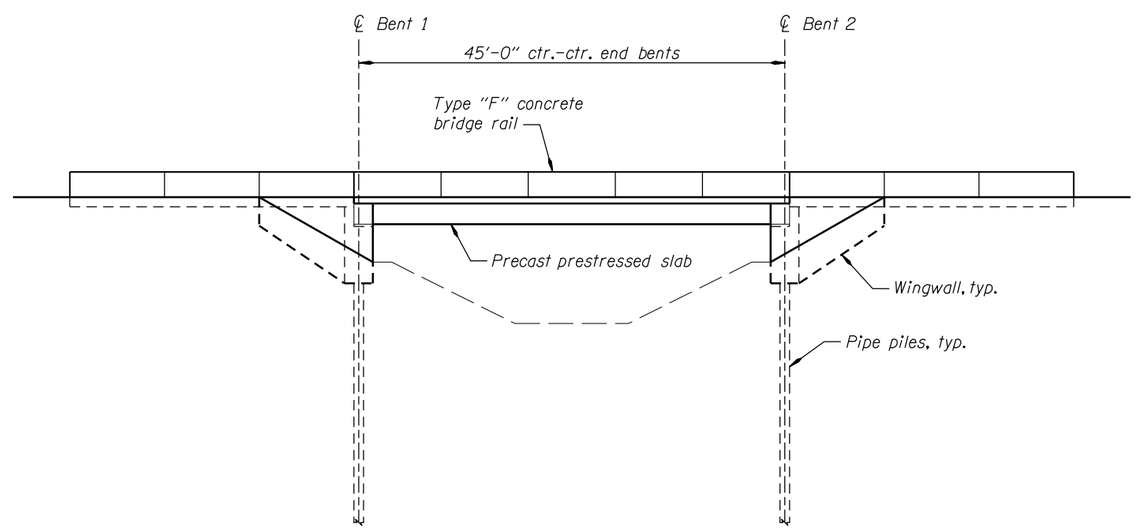

ELEVATION

Scale: 1/8" = 1'-0"

45'-0" SPAN - PLAN & ELEVATION	
OREGON HWY COST ALLOCATION STUDY	
HDR Engineering, Inc.	**FIG. 4 OF 9**

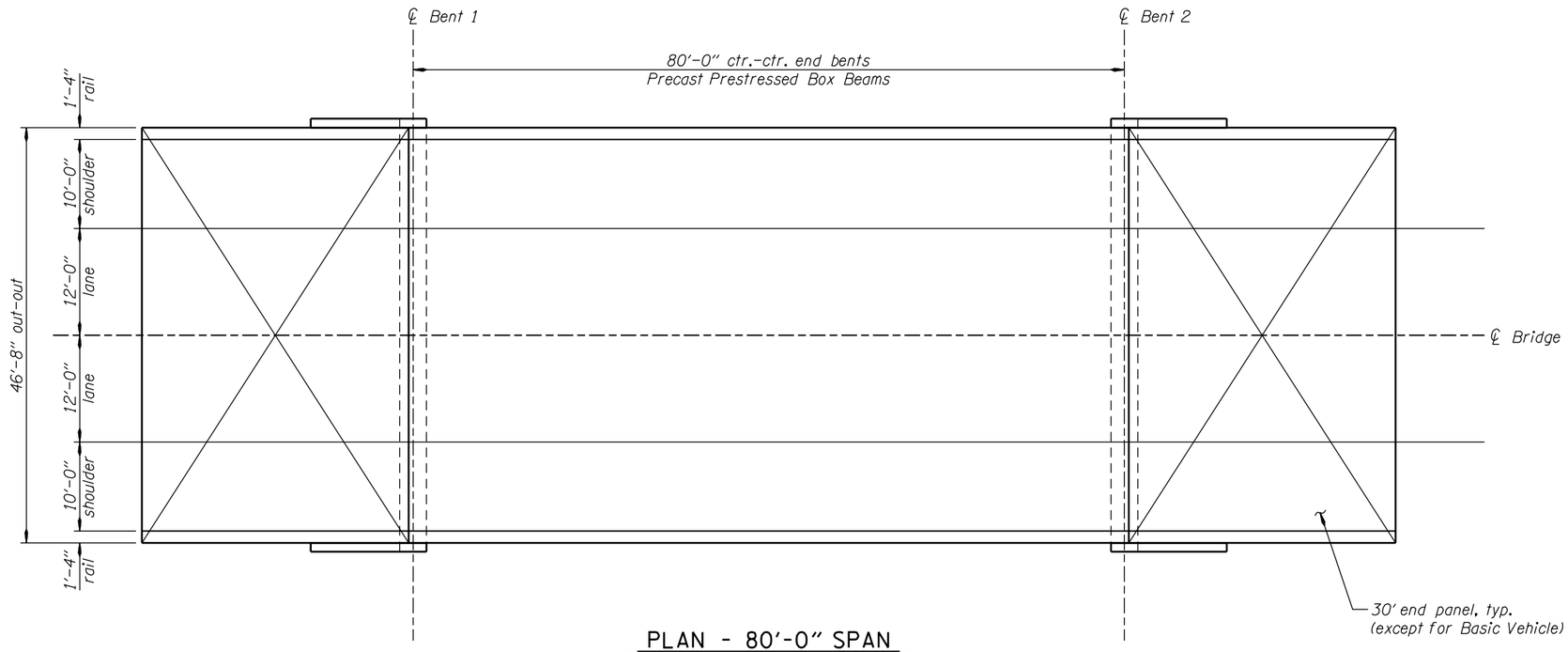

PLAN - 80'-0" SPAN

Scale: 1/8" = 1'-0"

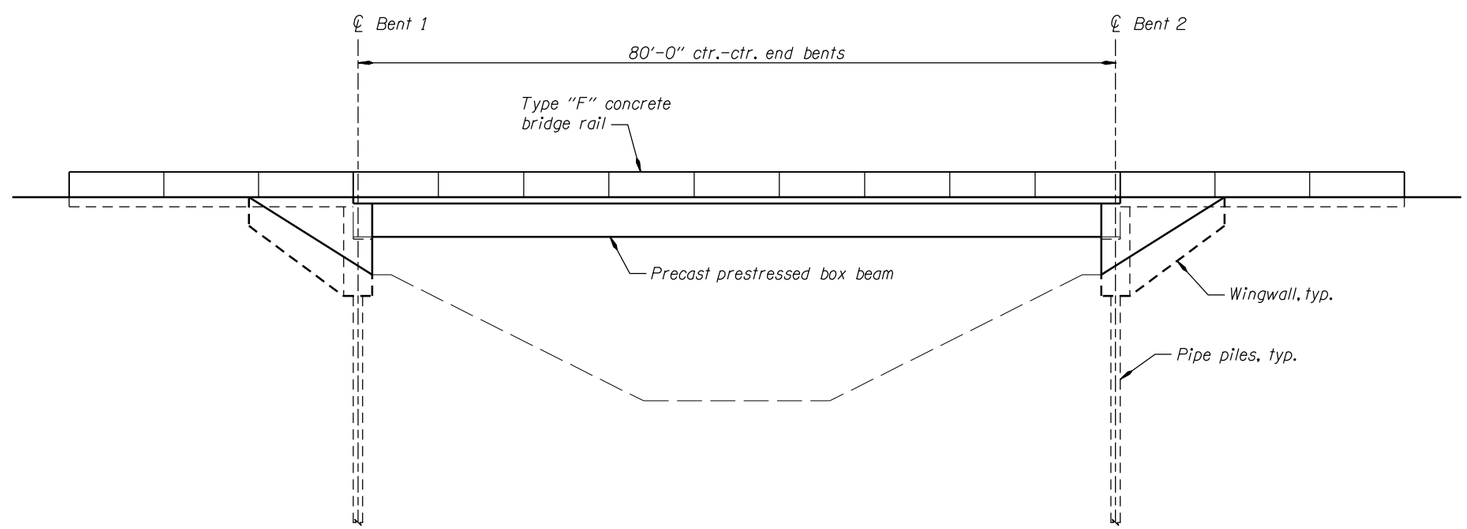

ELEVATION

Scale: 1/8" = 1'-0"

80'-0" SPAN - PLAN & ELEVATION	
OREGON HWY COST ALLOCATION STUDY	
HDR Engineering, Inc.	**FIG. 5 OF 9**

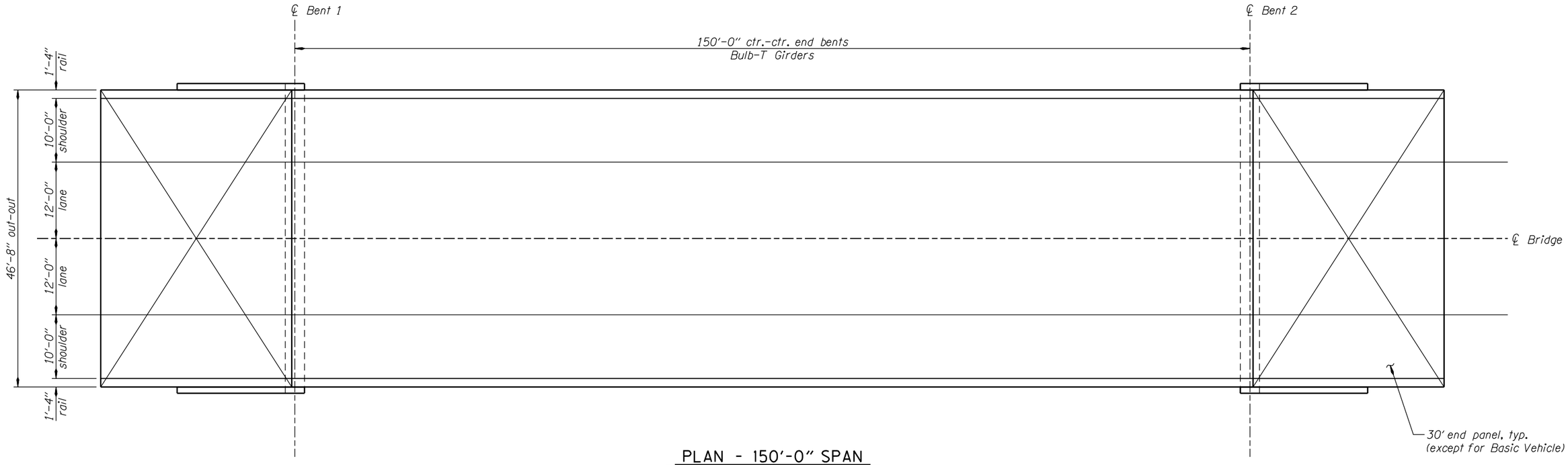

PLAN - 150'-0" SPAN

Scale: 1/8" = 1'-0"

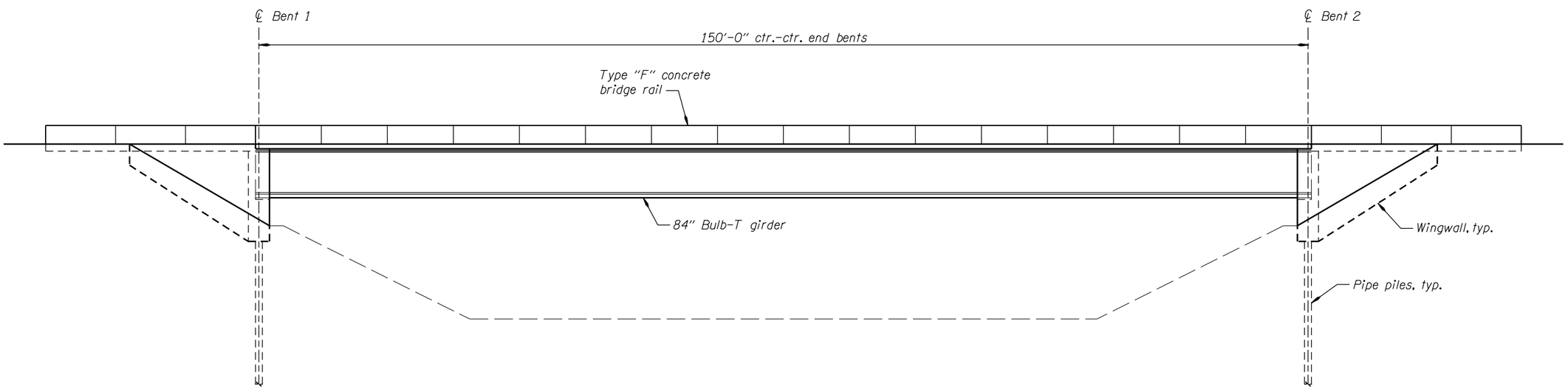

ELEVATION

Scale: 1/8" = 1'-0"

150'-0" SPAN - PLAN & ELEVATION	
OREGON HWY COST ALLOCATION STUDY	
HDR Engineering, Inc.	**FIG. 6 OF 9**

c:\pwworking\sea\d0811231\Bridge Cost Allocation.dgn 10/11/2012 2:41:13 PM hgonsior 1:96 - 001

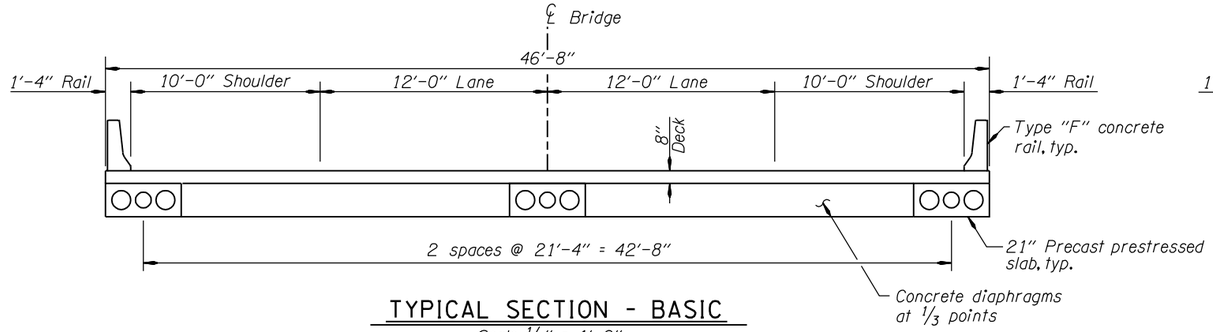

TYPICAL SECTION - BASIC

Scale: 1/4" = 1'-0"

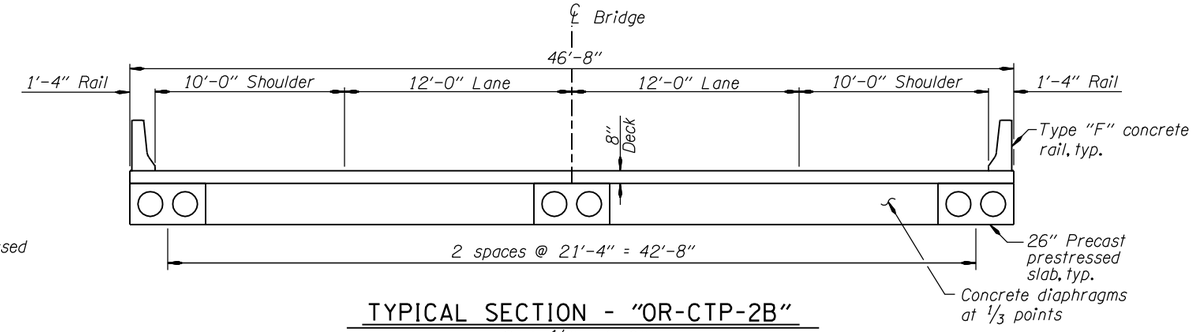

TYPICAL SECTION - "OR-CTP-2B"

Scale: 1/4" = 1'-0"

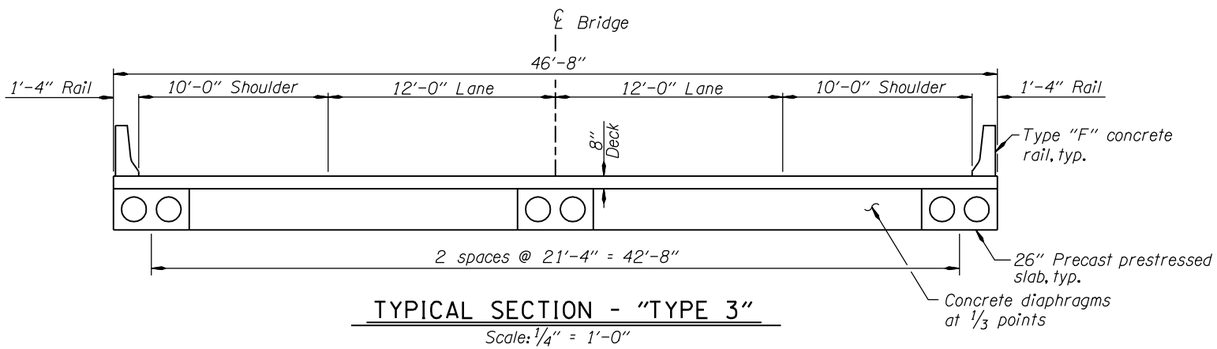

TYPICAL SECTION - "TYPE 3"

Scale: 1/4" = 1'-0"

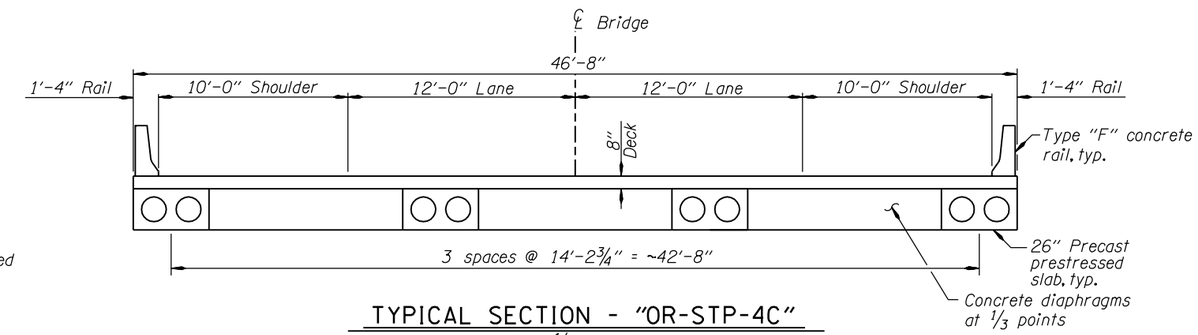

TYPICAL SECTION - "OR-STP-4C"

Scale: 1/4" = 1'-0"

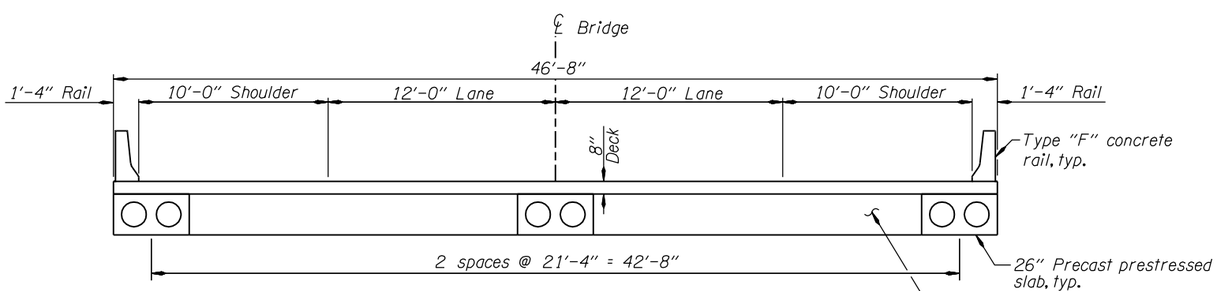

TYPICAL SECTION - "TYPE 3S2"

Scale: 1/4" = 1'-0"

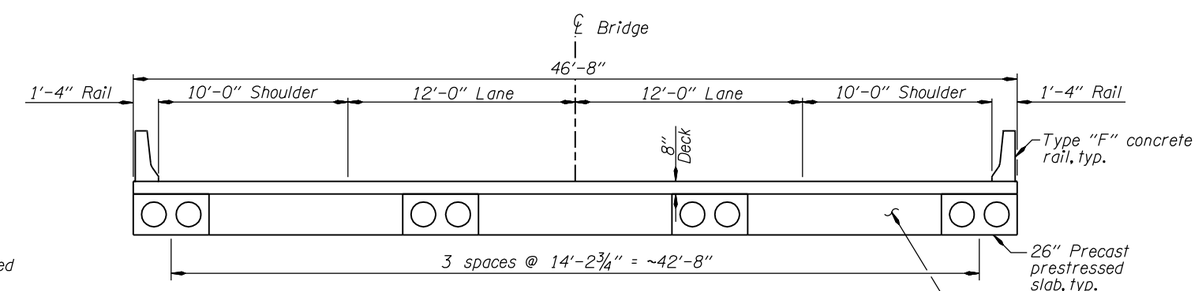

TYPICAL SECTION - "OR-STP-4E"

Scale: 1/4" = 1'-0"

45'-0" SPAN - TYPICAL SECTIONS	
OREGON HWY COST ALLOCATION STUDY	
HDR Engineering, Inc.	**FIG. 7 OF 9**

c:\pwworking\sea\d0811231\Bridge Cost Allocation.dgn 10/11/2012 2:41:38 PM hgonsior

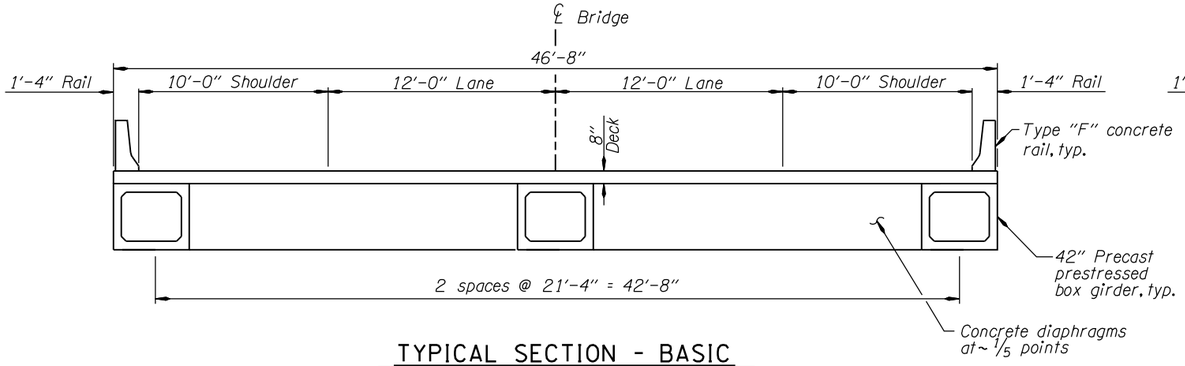

TYPICAL SECTION - BASIC

Scale: 1/4" = 1'-0"

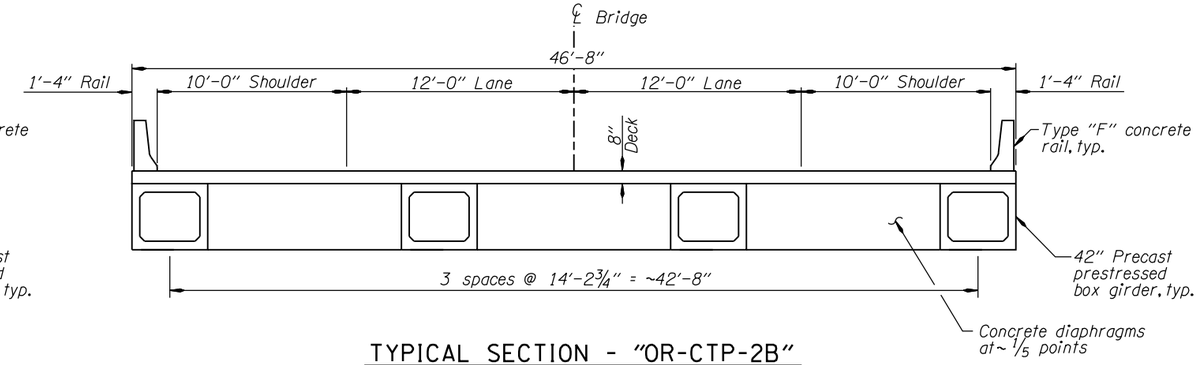

TYPICAL SECTION - "OR-CTP-2B"

Scale: 1/4" = 1'-0"

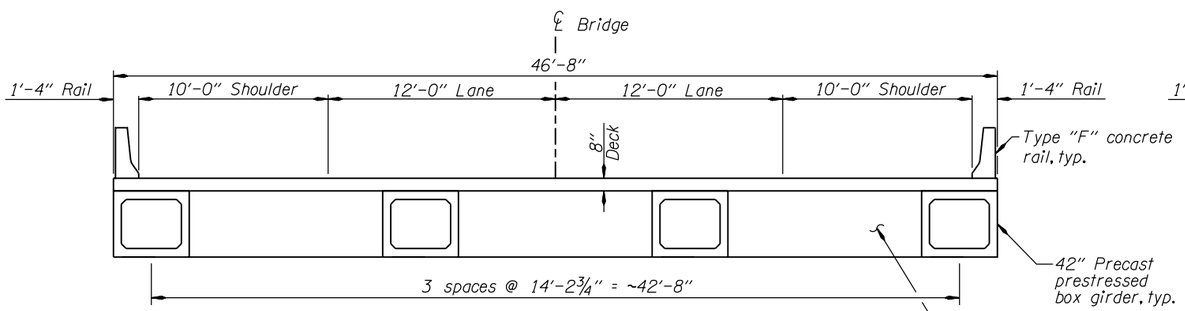

TYPICAL SECTION - "TYPE 3"

Scale: 1/4" = 1'-0"

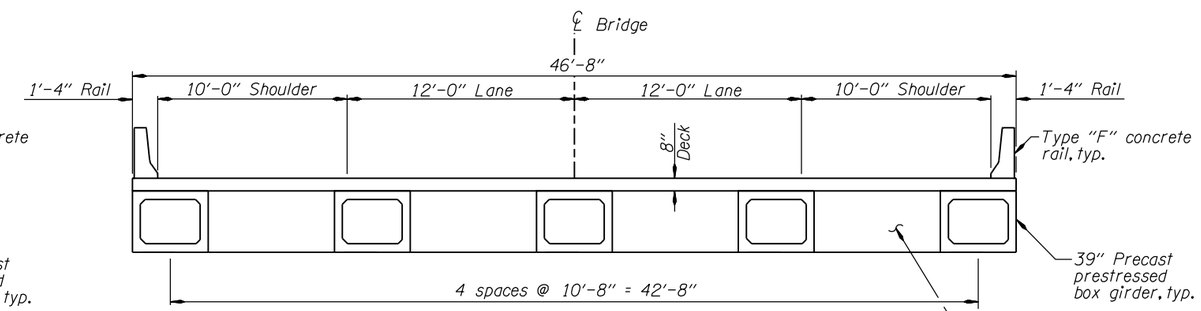

TYPICAL SECTION - "OR-STP-4C"

Scale: 1/4" = 1'-0"

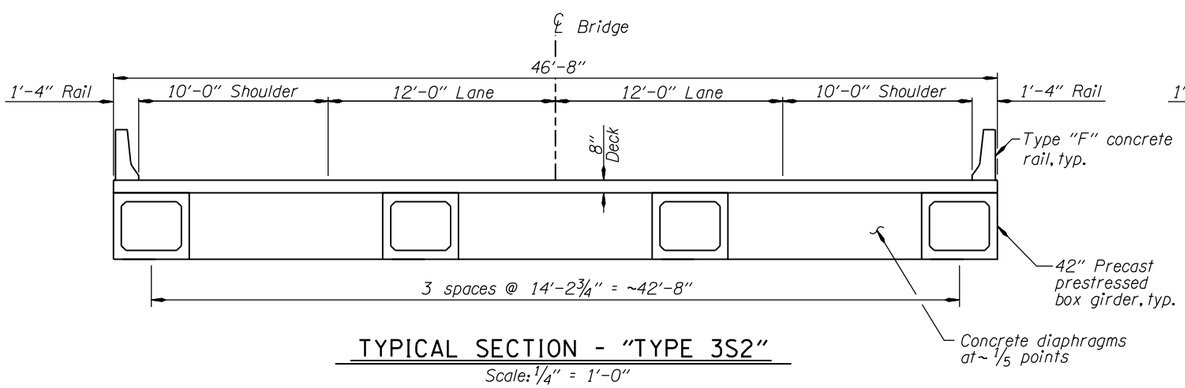

TYPICAL SECTION - "TYPE 3S2"

Scale: 1/4" = 1'-0"

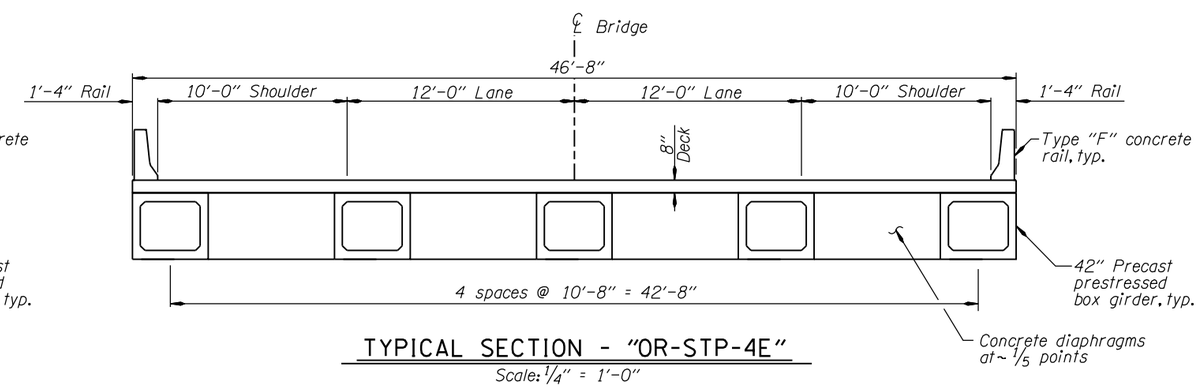

TYPICAL SECTION - "OR-STP-4E"

Scale: 1/4" = 1'-0"

80'-0" SPAN - TYPICAL SECTIONS

OREGON HWY COST ALLOCATION STUDY

HDR Engineering, Inc.

FIG. 8 OF 9

c:\pwworking\sea\d0811231\Bridge Cost Allocation.dgn 10/11/2012 2:42:00 PM hgonsior

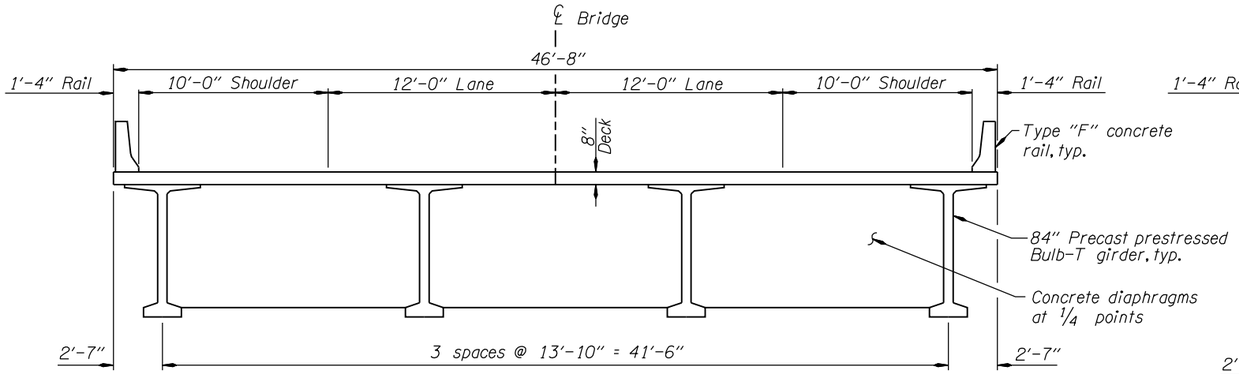

TYPICAL SECTION - BASIC

Scale: 1/4" = 1'-0"

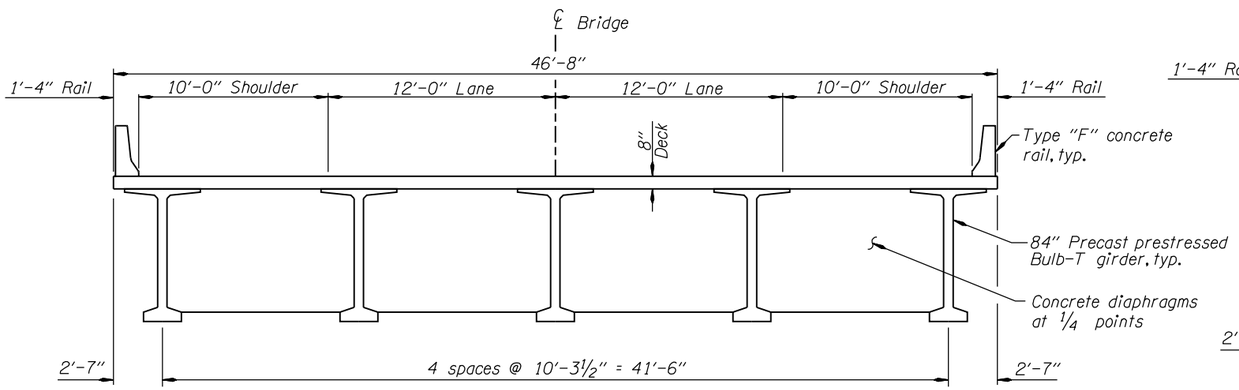

TYPICAL SECTION - "TYPE 3"

Scale: 1/4" = 1'-0"

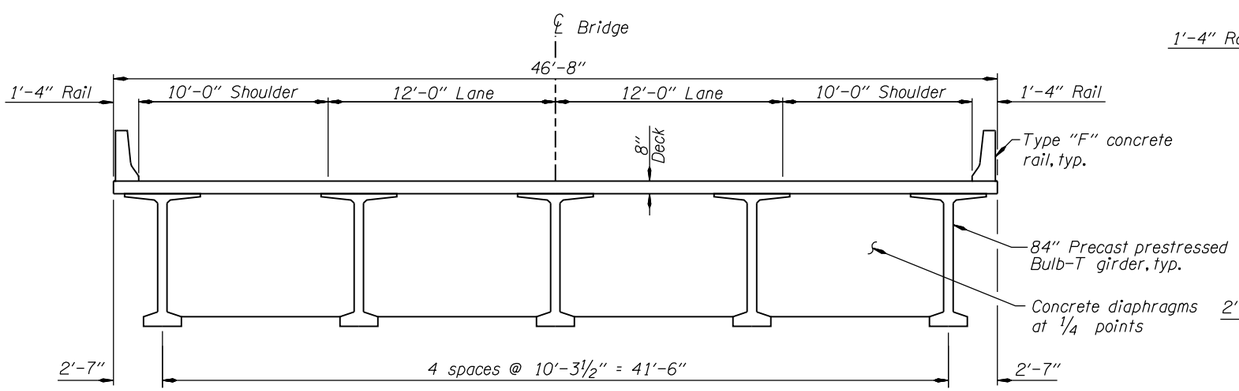

TYPICAL SECTION - "TYPE 3S2"

Scale: 1/4" = 1'-0"

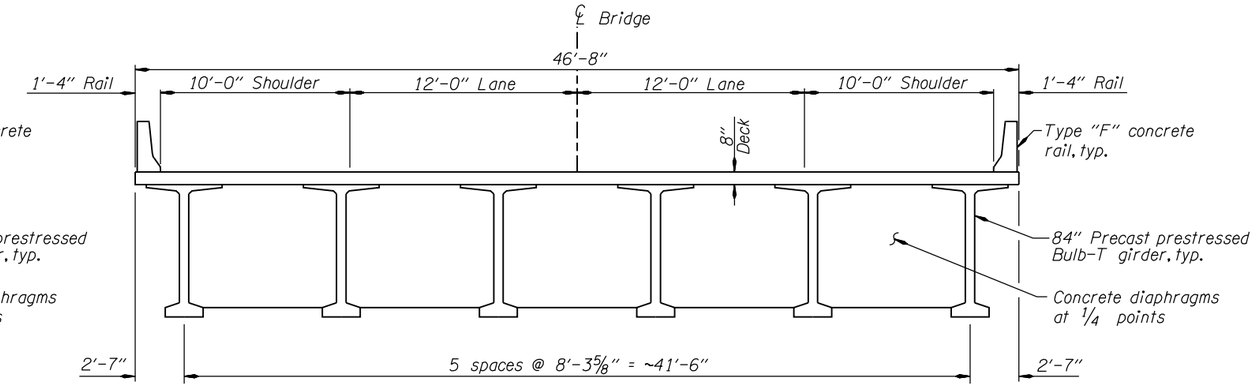

TYPICAL SECTION - "OR-CTP-2B"

Scale: 1/4" = 1'-0"

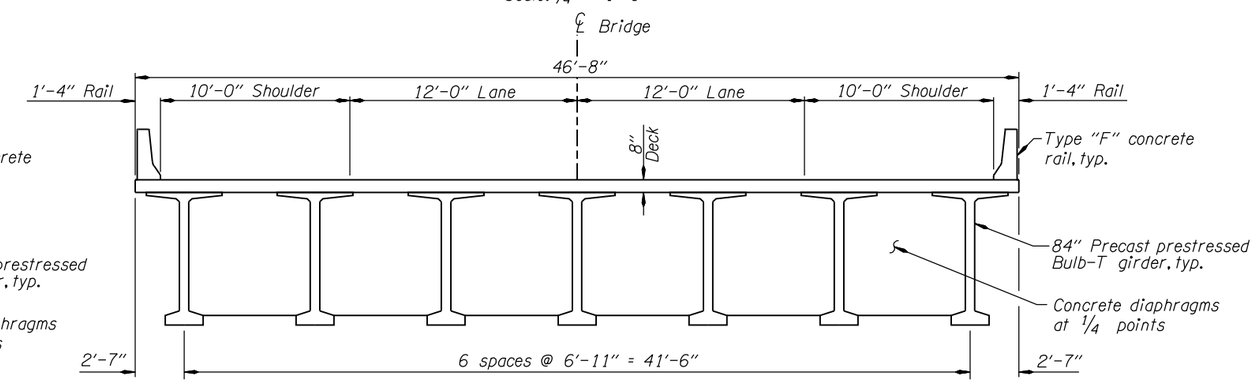

TYPICAL SECTION - "OR-STP-4C"

Scale: 1/4" = 1'-0"

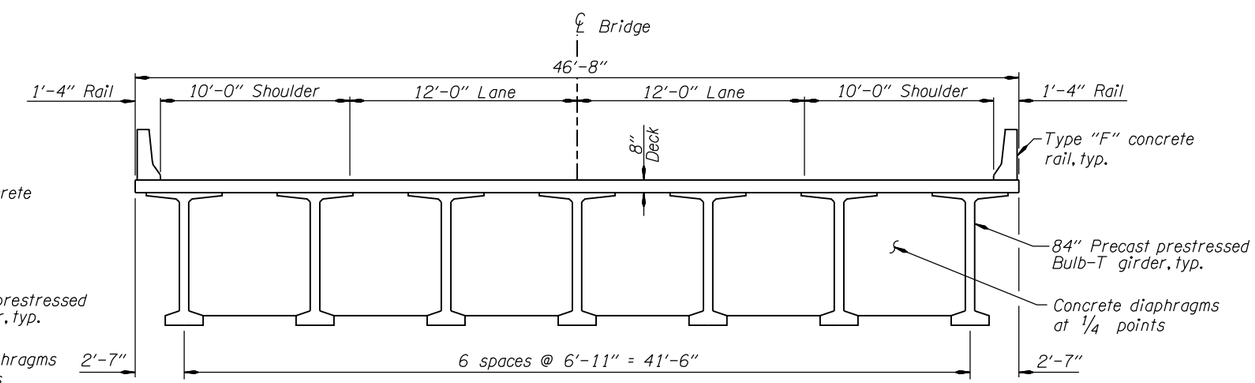

TYPICAL SECTION - "OR-STP-4E"

Scale: 1/4" = 1'-0"

OREGON HWY COST ALLOCATION STUDY

150'-0" SPAN - TYPICAL SECTIONS

HDR Engineering, Inc.

FIG. 9 OF 9

c:\pwworking\sea\d0811231\Bridge Cost Allocation.dgn 10/11/2012 2:42:22 PM hgonsior

HDR

Table 1

Bridge Configuration: 45-Foot Simple Span with Precast Prestressed Slabs

Estimating Engineer: Mary Ann Triska

			BASIC VEHICLE		TYPE 3		TYPE 3S2		OR CTP-2B		OR STP-4C		OR STP-4E	
			# Slabs = 3		# Slabs = 3		# Slabs = 3		# Slabs = 3		# Slabs = 4		# Slabs = 4	
			Area = 2,139 sq. ft.		Area = 2,139 sq. ft.		Area = 2,139 sq. ft.		Area = 2,139 sq. ft.		Area = 2,139 sq. ft.		Area = 2,139 sq. ft.	
ITEM	**UNITS**	**UNIT COST**	**AMOUNT**	**TOTAL**	**AMOUNT**	**TOTAL**	**AMOUNT**	**TOTAL**	**AMOUNT**	**TOTAL**	**AMOUNT**	**TOTAL**	**AMOUNT**	**TOTAL**
Substructure														
0510 Structure Excavation	yd^3	$ 35.00	39	$ 1,365.00	39	$ 1,365.00	39	$ 1,365.00	39	$ 1,365.00	39	$ 1,365.00	39	$ 1,365.00
0510 Granular Wall Backfill	yd^3	$ 45.00	55	$ 2,475.00	56	$ 2,520.00	56	$ 2,520.00	56	$ 2,520.00	56	$ 2,520.00	56	$ 2,520.00
0520-0100000A Furnish Pile Driving Equipment	Lump Sum	$ 15,000.00	All	$ 15,000.00	All	$ 15,000.00	All	$ 15,000.00	All	$ 15,000.00	All	$ 15,000.00	All	$ 15,000.00
0520 Furnish PP 12-3/4 X 0.375 Steel Piles	ft	$ 60.00	400	$ 24,000.00	400	$ 24,000.00	400	$ 24,000.00	400	$ 24,000.00	400	$ 24,000.00	400	$ 24,000.00
0520 Drive PP 12-3/4 X 0.375 Steel Piles	Each	$ 800.00	10	$ 8,000.00	10	$ 8,000.00	10	$ 8,000.00	10	$ 8,000.00	10	$ 8,000.00	10	$ 8,000.00
0530 Reinforcement	lbs	$ 1.10	8069	$ 8,875.90	8172	$ 8,989.20	8172	$ 8,989.20	8172	$ 8,989.20	8177	$ 8,994.70	8177	$ 8,994.70
0540 General Structural Concrete, Class 3300	yd^3	$ 650.00	13	$ 8,450.00	15	$ 9,750.00	15	$ 9,750.00	15	$ 9,750.00	15	$ 9,750.00	15	$ 9,750.00
0540 Foundation Concrete, Class 4000	yd^3	$ 500.00	68	$ 34,000.00	68	$ 34,000.00	68	$ 34,000.00	68	$ 34,000.00	68	$ 34,000.00	68	$ 34,000.00
Moblization (10%) (Substructure)	Lump Sum	Lump Sum	All	$ 11,351.77	All	$ 11,513.80	All	$ 11,513.80	All	$ 11,513.80	All	$ 11,514.41	All	$ 11,514.41
Superstructure														
0530 Reinforcement	lbs	$ 1.10	17801	$ 19,581.10	17801	$ 19,581.10	17801	$ 19,581.10	17801	$ 19,581.10	17801	$ 19,581.10	17801	$ 19,581.10
0540 Deck Concrete, Class HPC 4000	yd^3	$ 575.00	54	$ 31,050.00	55	$ 31,625.00	55	$ 31,625.00	55	$ 31,625.00	56	$ 32,200.00	56	$ 32,200.00
0540 General Structural Concrete, Class 3300	yd^3	$ 650.00	6	$ 3,900.00	8	$ 5,200.00	8	$ 5,200.00	8	$ 5,200.00	7	$ 4,550.00	7	$ 4,550.00
0540 Saw Cut Texturing	yd^2	$ 9.00	210	$ 1,890.00	210	$ 1,890.00	210	$ 1,890.00	210	$ 1,890.00	210	$ 1,890.00	210	$ 1,890.00
0550 18 Inch Precast Prestressed Slabs	ft	$ 195.00	0	$ -	0	$ -	0	$ -	0	$ -	0	$ -	0	$ -
0550 21 Inch Precast Prestressed Slabs	ft	$ 200.00	138	$ 27,600.00	0	$ -	0	$ -	0	$ -	0	$ -	0	$ -
0550 26 Inch Precast Prestressed Slabs	ft	$ 220.00	0	$ -	138	$ 30,360.00	138	$ 30,360.00	138	$ 30,360.00	183	$ 40,260.00	183	$ 40,260.00
0587 Type "F" Concrete Rail	ft	$ 105.00	92	$ 9,660.00	213	$ 22,365.00	213	$ 22,365.00	213	$ 22,365.00	213	$ 22,365.00	213	$ 22,365.00
0545 Reinforced Concrete Bridge End Panels	yd^2	$ 220.00	0	$ -	315	$ 69,300.00	315	$ 69,300.00	315	$ 69,300.00	315	$ 69,300.00	315	$ 69,300.00
Moblization (10%) (Superstructure)	Lump Sum	Lump Sum	All	$ 10,409.01	All	$ 20,035.68	All	$ 20,035.68	All	$ 20,035.68	All	$ 21,127.34	All	$ 21,127.34
Total Substructure Cost				$ 113,517.67		$ 115,138.00		$ 115,138.00		$ 115,138.00		$ 115,144.11		$ 115,144.11
Total Superstructure Cost				$ 104,090.11		$ 200,356.78		$ 200,356.78		$ 200,356.78		$ 211,273.44		$ 211,273.44
Total Structure Cost				$ 217,607.78		$ 315,494.78		$ 315,494.78		$ 315,494.78		$ 326,417.56		$ 326,417.56
Cost per Square Foot				$ 101.73		$ 147.49		$ 147.49		$ 147.49		$ 152.60		$ 152.60

HDR

Table 2

Bridge Configuration: 80-Foot Simple Span with Precast Prestressed Box Beams

Estimating Engineer: Mary Ann Triska

			BASIC VEHICLE		TYPE 3		TYPE 3S2		OR CTP-2B		OR STP-4C		OR STP-4E	
			# Boxes = 3		# Boxes = 4		# Boxes = 4		# Boxes = 4		# Boxes = 5		# Boxes = 5	
			Area = 3,780 sq. ft.		Area = 3,780 sq. ft.		Area = 3,780 sq. ft.		Area = 3,780 sq. ft.		Area = 3,780 sq. ft.		Area = 3,780 sq. ft.	
ITEM	**UNITS**	**UNIT COST**	**AMOUNT**	**TOTAL**	**AMOUNT**	**TOTAL**	**AMOUNT**	**TOTAL**	**AMOUNT**	**TOTAL**	**AMOUNT**	**TOTAL**	**AMOUNT**	**TOTAL**
Substructure														
0510 Structure Excavation	yd^3	$ 35.00	39	$ 1,365.00	39	$ 1,365.00	39	$ 1,365.00	39	$ 1,365.00	39	$ 1,365.00	39	$ 1,365.00
0510 Granular Wall Backfill	yd^3	$ 45.00	68	$ 3,060.00	68	$ 3,060.00	68	$ 3,060.00	68	$ 3,060.00	66	$ 2,970.00	68	$ 3,060.00
0520-0100000A Furnish Pile Driving Equipment	Lump Sum	$ 15,000.00	All	$ 15,000.00	All	$ 15,000.00	All	$ 15,000.00	All	$ 15,000.00	All	$ 15,000.00	All	$ 15,000.00
0520 Furnish PP 12-3/4 X 0.375 Steel Piles	ft	$ 60.00	480	$ 28,800.00	560	$ 33,600.00	560	$ 33,600.00	560	$ 33,600.00	640	$ 38,400.00	640	$ 38,400.00
0520 Drive PP 12-3/4 X 0.375 Steel Piles	Each	$ 800.00	12	$ 9,600.00	14	$ 11,200.00	14	$ 11,200.00	14	$ 11,200.00	16	$ 12,800.00	16	$ 12,800.00
0530 Reinforcement	lbs	$ 1.10	8736	$ 9,609.60	8755	$ 9,630.50	8755	$ 9,630.50	8755	$ 9,630.50	8678	$ 9,545.80	8762	$ 9,638.20
0540 General Structural Concrete, Class 3300	yd^3	$ 650.00	19	$ 12,350.00	19	$ 12,350.00	19	$ 12,350.00	19	$ 12,350.00	18	$ 11,700.00	19	$ 12,350.00
0540 Foundation Concrete, Class 4000	yd^3	$ 500.00	68	$ 34,000.00	68	$ 34,000.00	68	$ 34,000.00	68	$ 34,000.00	68	$ 34,000.00	68	$ 34,000.00
Moblization (10%) (Substructure)	Lump Sum	Lump Sum	All	$ 12,642.73	All	$ 13,356.17	All	$ 13,356.17	All	$ 13,356.17	All	$ 13,976.38	All	$ 14,068.13
Superstructure														
0530 Reinforcement	lbs	$ 1.10	31459	$ 34,604.90	31459	$ 34,604.90	31459	$ 34,604.90	31459	$ 34,604.90	29045	$ 31,949.50	29045	$ 31,949.50
0540 Deck Concrete, Class HPC 4000	yd^3	$ 575.00	97	$ 55,775.00	101	$ 58,075.00	101	$ 58,075.00	101	$ 58,075.00	102	$ 58,650.00	104	$ 59,800.00
0540 General Structural Concrete, Class 3300	yd^3	$ 650.00	18	$ 11,700.00	16	$ 10,400.00	16	$ 10,400.00	16	$ 10,400.00	13	$ 8,450.00	14	$ 9,100.00
0540 Saw Cut Texturing	yd^2	$ 9.00	372	$ 3,348.00	372	$ 3,348.00	372	$ 3,348.00	372	$ 3,348.00	372	$ 3,348.00	372	$ 3,348.00
0550 33 Inch Precast Prestressed Box Beams	ft	$ 265.00	0	$ -	0	$ -	0	$ -	0	$ -	0	$ -	0	$ -
0550 39 Inch Precast Prestressed Box Beams	ft	$ 275.00	0	$ -	0	$ -	0	$ -	0	$ -	405	$ 111,375.00	0	$ -
0550 42 Inch Precast Prestressed Box Beams	ft	$ 300.00	243	$ 72,900.00	324	$ 97,200.00	324	$ 97,200.00	324	$ 97,200.00	0	$ -	405	$ 121,500.00
0587 Type "F" Concrete Rail	ft	$ 105.00	162	$ 17,010.00	283	$ 29,715.00	283	$ 29,715.00	283	$ 29,715.00	283	$ 29,715.00	283	$ 29,715.00
0545 Reinforced Concrete Bridge End Panels	yd^2	$ 220.00	0	$ -	315	$ 69,300.00	315	$ 69,300.00	315	$ 69,300.00	315	$ 69,300.00	315	$ 69,300.00
Moblization (10%) (Superstructure)	Lump Sum	Lump Sum	All	$ 21,704.21	All	$ 33,626.99	All	$ 33,626.99	All	$ 33,626.99	All	$ 34,754.17	All	$ 36,079.17
Total Substructure Cost				$ 126,427.33		$ 133,561.67		$ 133,561.67		$ 133,561.67		$ 139,757.18		$ 140,681.33
Total Superstructure Cost				$ 217,042.11		$ 336,269.89		$ 336,269.89		$ 336,269.89		$ 347,541.67		$ 360,791.67
Total Structure Cost				$ 343,469.44		$ 469,831.56		$ 469,831.56		$ 469,831.56		$ 487,298.84		$ 501,473.00
Cost per Square Foot				$ 90.86		$ 124.29		$ 124.29		$ 124.29		$ 128.91		$ 132.66

HDR

Table 3

Bridge Configuration: 150-Foot Simple Span with 84-Inch Precast Prestressed Bulb-T

Estimating Engineer: Mary Ann Triska

			BASIC VEHICLE		TYPE 3		TYPE 3S2		OR CTP-2B		OR STP-4C		OR STP-4E	
			# Girders = 4		# Girders = 5		# Girders = 5		# Girders = 6		# Girders = 7		# Girders = 7	
			Area = 7,067 sq. ft.		Area = 7,067 sq. ft.		Area = 7,067 sq. ft.		Area = 7,067 sq. ft.		Area = 7,067 sq. ft.		Area = 7,067 sq. ft.	
ITEM	**UNITS**	**UNIT COST**	**AMOUNT**	**TOTAL**	**AMOUNT**	**TOTAL**	**AMOUNT**	**TOTAL**	**AMOUNT**	**TOTAL**	**AMOUNT**	**TOTAL**	**AMOUNT**	**TOTAL**
Substructure														
0510 Structure Excavation	yd^3	$ 35.00	39	$ 1,365.00	39	$ 1,365.00	39	$ 1,365.00	39	$ 1,365.00	39	$ 1,365.00	39	$ 1,365.00
0510 Granular Wall Backfill	yd^3	$ 45.00	98	$ 4,410.00	98	$ 4,410.00	98	$ 4,410.00	98	$ 4,410.00	98	$ 4,410.00	98	$ 4,410.00
0520-0100000A Furnish Pile Driving Equipment	Lump Sum	$ 15,000.00	All	$ 15,000.00	All	$ 15,000.00	All	$ 15,000.00	All	$ 15,000.00	All	$ 15,000.00	All	$ 15,000.00
0520 Furnish PP 12-3/4 X 0.375 Steel Piles	ft	$ 60.00	800	$ 48,000.00	880	$ 52,800.00	880	$ 52,800.00	960	$ 57,600.00	1040	$ 62,400.00	1120	$ 67,200.00
0520 Drive PP 12-3/4 X 0.375 Steel Piles	Each	$ 800.00	20	$ 16,000.00	22	$ 17,600.00	22	$ 17,600.00	24	$ 19,200.00	26	$ 20,800.00	28	$ 22,400.00
0530 Reinforcement	lbs	$ 1.10	11619	$ 12,780.90	11671	$ 12,838.10	11671	$ 12,838.10	11697	$ 12,866.70	11723	$ 12,895.30	11723	$ 12,895.30
0540 General Structural Concrete, Class 3300	yd^3	$ 650.00	34	$ 22,100.00	34	$ 22,100.00	34	$ 22,100.00	34	$ 22,100.00	34	$ 22,100.00	34	$ 22,100.00
0540 Foundation Concrete, Class 4000	yd^3	$ 500.00	68	$ 34,000.00	68	$ 34,000.00	68	$ 34,000.00	68	$ 34,000.00	68	$ 34,000.00	68	$ 34,000.00
Moblization (10%) (Substructure)	Lump Sum	Lump Sum	All	$ 17,072.88	All	$ 17,790.34	All	$ 17,790.34	All	$ 18,504.63	All	$ 19,218.92	All	$ 19,930.03
Superstructure														
0530 Reinforcement	lbs	$ 1.10	58807	$ 64,687.70	54295	$ 59,724.50	54295	$ 59,724.50	47089	$ 51,797.90	35808	$ 39,388.80	35808	$ 39,388.80
0540 Deck Concrete, Class HPC 4000	yd^3	$ 575.00	190	$ 109,250.00	203	$ 116,725.00	203	$ 116,725.00	214	$ 123,050.00	227	$ 130,525.00	227	$ 130,525.00
0540 General Structural Concrete, Class 3300	yd^3	$ 650.00	41	$ 26,650.00	40	$ 26,000.00	40	$ 26,000.00	39	$ 25,350.00	39	$ 25,350.00	39	$ 25,350.00
0540 Saw Cut Texturing	yd^2	$ 9.00	695	$ 6,255.00	695	$ 6,255.00	695	$ 6,255.00	695	$ 6,255.00	695	$ 6,255.00	695	$ 6,255.00
0550 Deck BT 84 Precast Prestressed Girders	ft	$ 220.00	606	$ 133,320.00	757	$ 166,540.00	757	$ 166,540.00	908	$ 199,760.00	1060	$ 233,200.00	1060	$ 233,200.00
0587 Type "F" Concrete Rail	ft	$ 105.00	303	$ 31,815.00	424	$ 44,520.00	424	$ 44,520.00	424	$ 44,520.00	424	$ 44,520.00	424	$ 44,520.00
0545 Reinforced Concrete Bridge End Panels	yd^2	$ 220.00	0	$ -	315	$ 69,300.00	315	$ 69,300.00	315	$ 69,300.00	315	$ 69,300.00	315	$ 69,300.00
Moblization (10%) (Superstructure)	Lump Sum	Lump Sum	All	$ 41,330.86	All	$ 54,340.50	All	$ 54,340.50	All	$ 57,781.43	All	$ 60,948.76	All	$ 60,948.76
Total Substructure Cost				$ 170,728.78		$ 177,903.44		$ 177,903.44		$ 185,046.33		$ 192,189.22		$ 199,300.33
Total Superstructure Cost				$ 413,308.56		$ 543,405.00		$ 543,405.00		$ 577,814.33		$ 609,487.56		$ 609,487.56
Total Structure Cost				$ 584,037.33		$ 721,308.44		$ 721,308.44		$ 762,860.67		$ 801,676.78		$ 808,787.89
Cost per Square Foot				$ 82.65		$ 102.07		$ 102.07		$ 107.95		$ 113.45		$ 114.45

HDR

Table 4

Bridge Configuration: 45-Foot Simple Span with 18-Inch Precast Prestressed Slabs

Estimating Engineer: Mary Ann Triska

			BASIC VEHICLE		TYPE 3		TYPE 3S2		OR CTP-2B		OR STP-4C		OR STP-4E	
			# Slabs = 4		# Slabs = 5		# Slabs = 5		# Slabs = 6		# Slabs = 6		# Slabs = 6	
			Area = 2,139 sq. ft.		Area = 2,139 sq. ft.		Area = 2,139 sq. ft.		Area = 2,139 sq. ft.		Area = 2,139 sq. ft.		Area = 2,139 sq. ft.	
ITEM	**UNITS**	**UNIT COST**	**AMOUNT**	**TOTAL**	**AMOUNT**	**TOTAL**	**AMOUNT**	**TOTAL**	**AMOUNT**	**TOTAL**	**AMOUNT**	**TOTAL**	**AMOUNT**	**TOTAL**
Substructure														
0510 Structure Excavation	yd^3	$ 35.00	39	$ 1,365.00	39	$ 1,365.00	39	$ 1,365.00	39	$ 1,365.00	39	$ 1,365.00	39	$ 1,365.00
0510 Granular Wall Backfill	yd^3	$ 45.00	53	$ 2,385.00	53	$ 2,385.00	53	$ 2,385.00	53	$ 2,385.00	53	$ 2,385.00	53	$ 2,385.00
0520-0100000A Furnish Pile Driving Equipment	Lump Sum	$ 15,000.00	All	$ 15,000.00	All	$ 15,000.00	All	$ 15,000.00	All	$ 15,000.00	All	$ 15,000.00	All	$ 15,000.00
0520 Furnish PP 12-3/4 X 0.375 Steel Piles	ft	$ 60.00	400	$ 24,000.00	400	$ 24,000.00	400	$ 24,000.00	480	$ 28,800.00	480	$ 28,800.00	480	$ 28,800.00
0520 Drive PP 12-3/4 X 0.375 Steel Piles	Each	$ 800.00	10	$ 8,000.00	10	$ 8,000.00	10	$ 8,000.00	12	$ 9,600.00	12	$ 9,600.00	12	$ 9,600.00
0530 Reinforcement	lbs	$ 1.10	8013	$ 8,814.30	8017	$ 8,818.70	8017	$ 8,818.70	8017	$ 8,818.70	8017	$ 8,818.70	8017	$ 8,818.70
0540 General Structural Concrete, Class 3300	yd^3	$ 650.00	13	$ 8,450.00	13	$ 8,450.00	13	$ 8,450.00	13	$ 8,450.00	13	$ 8,450.00	13	$ 8,450.00
0540 Foundation Concrete, Class 4000	yd^3	$ 500.00	68	$ 34,000.00	68	$ 34,000.00	68	$ 34,000.00	68	$ 34,000.00	68	$ 34,000.00	68	$ 34,000.00
Moblization (10%) (Substructure)	Lump Sum	Lump Sum	All	$ 11,334.92	All	$ 11,335.41	All	$ 11,335.41	All	$ 12,046.52	All	$ 12,046.52	All	$ 12,046.52
Superstructure														
0530 Reinforcement	lbs	$ 1.10	17801	$ 19,581.10	16435	$ 18,078.50	16435	$ 18,078.50	14254	$ 15,679.40	14254	$ 15,679.40	14254	$ 15,679.40
0540 Deck Concrete, Class HPC 4000	yd^3	$ 575.00	56	$ 32,200.00	56	$ 32,200.00	56	$ 32,200.00	56	$ 32,200.00	56	$ 32,200.00	56	$ 32,200.00
0540 General Structural Concrete, Class 3300	yd^3	$ 650.00	5	$ 3,250.00	4	$ 2,600.00	4	$ 2,600.00	4	$ 2,600.00	4	$ 2,600.00	4	$ 2,600.00
0540 Saw Cut Texturing	yd^2	$ 9.00	210	$ 1,890.00	210	$ 1,890.00	210	$ 1,890.00	210	$ 1,890.00	210	$ 1,890.00	210	$ 1,890.00
0550 18 Inch Precast Prestressed Slabs	ft	$ 195.00	183	$ 35,685.00	229	$ 44,655.00	229	$ 44,655.00	275	$ 53,625.00	275	$ 53,625.00	275	$ 53,625.00
0587 Type "F" Concrete Rail	ft	$ 105.00	92	$ 9,660.00	213	$ 22,365.00	213	$ 22,365.00	213	$ 22,365.00	213	$ 22,365.00	213	$ 22,365.00
0545 Reinforced Concrete Bridge End Panels	yd^2	$ 220.00	0	$ -	315	$ 69,300.00	315	$ 69,300.00	315	$ 69,300.00	315	$ 69,300.00	315	$ 69,300.00
Moblization (10%) (Superstructure)	Lump Sum	Lump Sum	All	$ 11,362.90	All	$ 21,232.06	All	$ 21,232.06	All	$ 21,962.16	All	$ 21,962.16	All	$ 21,962.16
Total Substructure Cost				$ 113,349.22		$ 113,354.11		$ 113,354.11		$ 120,465.22		$ 120,465.22		$ 120,465.22
Total Superstructure Cost				$ 113,629.00		$ 212,320.56		$ 212,320.56		$ 219,621.56		$ 219,621.56		$ 219,621.56
Total Structure Cost				$ 226,978.22		$ 325,674.67		$ 325,674.67		$ 340,086.78		$ 340,086.78		$ 340,086.78
Cost per Square Foot				$ 106.11		$ 152.25		$ 152.25		$ 158.99		$ 158.99		$ 158.99

HDR

Table 5

Bridge Configuration: 45-Foot Simple Span with 21-Inch Precast Prestressed Slabs

Estimating Engineer: Mary Ann Triska

			BASIC VEHICLE		TYPE 3		TYPE 3S2		OR CTP-2B		OR STP-4C		OR STP-4E	
			# Slabs = 3		# Slabs = 4		# Slabs = 4		# Slabs = 4		# Slabs = 5		# Slabs = 5	
			Area = 2,139 sq. ft.		Area = 2,139 sq. ft.		Area = 2,139 sq. ft.		Area = 2,139 sq. ft.		Area = 2,139 sq. ft.		Area = 2,139 sq. ft.	
ITEM	**UNITS**	**UNIT COST**	**AMOUNT**	**TOTAL**	**AMOUNT**	**TOTAL**	**AMOUNT**	**TOTAL**	**AMOUNT**	**TOTAL**	**AMOUNT**	**TOTAL**	**AMOUNT**	**TOTAL**
Substructure														
0510 Structure Excavation	yd^3	$ 35.00	39	$ 1,365.00	39	$ 1,365.00	39	$ 1,365.00	39	$ 1,365.00	39	$ 1,365.00	39	$ 1,365.00
0510 Granular Wall Backfill	yd^3	$ 45.00	55	$ 2,475.00	55	$ 2,475.00	55	$ 2,475.00	55	$ 2,475.00	55	$ 2,475.00	55	$ 2,475.00
0520-0100000A Furnish Pile Driving Equipment	Lump Sum	$ 15,000.00	All	$ 15,000.00	All	$ 15,000.00	All	$ 15,000.00	All	$ 15,000.00	All	$ 15,000.00	All	$ 15,000.00
0520 Furnish PP 12-3/4 X 0.375 Steel Piles	ft	$ 60.00	400	$ 24,000.00	400	$ 24,000.00	400	$ 24,000.00	400	$ 24,000.00	400	$ 24,000.00	400	$ 24,000.00
0520 Drive PP 12-3/4 X 0.375 Steel Piles	Each	$ 800.00	10	$ 8,000.00	10	$ 8,000.00	10	$ 8,000.00	10	$ 8,000.00	10	$ 8,000.00	10	$ 8,000.00
0530 Reinforcement	lbs	$ 1.10	8069	$ 8,875.90	8017	$ 8,818.70	8017	$ 8,818.70	8017	$ 8,818.70	8079	$ 8,886.90	8079	$ 8,886.90
0540 General Structural Concrete, Class 3300	yd^3	$ 650.00	13	$ 8,450.00	13	$ 8,450.00	13	$ 8,450.00	13	$ 8,450.00	13	$ 8,450.00	13	$ 8,450.00
0540 Foundation Concrete, Class 4000	yd^3	$ 500.00	68	$ 34,000.00	68	$ 34,000.00	68	$ 34,000.00	68	$ 34,000.00	68	$ 34,000.00	68	$ 34,000.00
Moblization (10%) (Substructure)	Lump Sum	Lump Sum	All	$ 11,351.77	All	$ 11,345.41	All	$ 11,345.41	All	$ 11,345.41	All	$ 11,352.99	All	$ 11,352.99
Superstructure														
0530 Reinforcement	lbs	$ 1.10	17801	$ 19,581.10	17801	$ 19,581.10	17801	$ 19,581.10	17801	$ 19,581.10	16435	$ 18,078.50	16435	$ 18,078.50
0540 Deck Concrete, Class HPC 4000	yd^3	$ 575.00	54	$ 31,050.00	55	$ 31,625.00	55	$ 31,625.00	55	$ 31,625.00	57	$ 32,775.00	57	$ 32,775.00
0540 General Structural Concrete, Class 3300	yd^3	$ 650.00	6	$ 3,900.00	6	$ 3,900.00	6	$ 3,900.00	6	$ 3,900.00	5	$ 3,250.00	5	$ 3,250.00
0540 Saw Cut Texturing	yd^2	$ 9.00	210	$ 1,890.00	210	$ 1,890.00	210	$ 1,890.00	210	$ 1,890.00	210	$ 1,890.00	210	$ 1,890.00
0550 21 Inch Precast Prestressed Slabs	ft	$ 200.00	138	$ 27,600.00	183	$ 36,600.00	183	$ 36,600.00	183	$ 36,600.00	229	$ 45,800.00	229	$ 45,800.00
0587 Type "F" Concrete Rail	ft	$ 105.00	92	$ 9,660.00	213	$ 22,365.00	213	$ 22,365.00	213	$ 22,365.00	213	$ 22,365.00	213	$ 22,365.00
0545 Reinforced Concrete Bridge End Panels	yd^2	$ 220.00	0	$ -	315	$ 69,300.00	315	$ 69,300.00	315	$ 69,300.00	315	$ 69,300.00	315	$ 69,300.00
Moblization (10%) (Superstructure)	Lump Sum	Lump Sum	All	$ 10,409.01	All	$ 20,584.57	All	$ 20,584.57	All	$ 20,584.57	All	$ 21,495.39	All	$ 21,495.39
Total Substructure Cost				$ 113,517.67		$ 113,454.11		$ 113,454.11		$ 113,454.11		$ 113,529.89		$ 113,529.89
Total Superstructure Cost				$ 104,090.11		$ 205,845.67		$ 205,845.67		$ 205,845.67		$ 214,953.89		$ 214,953.89
Total Structure Cost				$ 217,607.78		$ 319,299.78		$ 319,299.78		$ 319,299.78		$ 328,483.78		$ 328,483.78
Cost per Square Foot				$ 101.73		$ 149.27		$ 149.27		$ 149.27		$ 153.57		$ 153.57

HDR

Table 6

Bridge Configuration: 45-Foot Simple Span with 26-Inch Precast Prestressed Slabs

Estimating Engineer: Mary Ann Triska

			BASIC VEHICLE		TYPE 3		TYPE 3S2		OR CTP-2B		OR STP-4C		OR STP-4E	
			# Slabs = 3		# Slabs = 3		# Slabs = 3		# Slabs = 3		# Slabs = 4		# Slabs = 4	
			Area = 2,139 sq. ft.		Area = 2,139 sq. ft.		Area = 2,139 sq. ft.		Area = 2,139 sq. ft.		Area = 2,139 sq. ft.		Area = 2,139 sq. ft.	
ITEM	**UNITS**	**UNIT COST**	**AMOUNT**	**TOTAL**	**AMOUNT**	**TOTAL**	**AMOUNT**	**TOTAL**	**AMOUNT**	**TOTAL**	**AMOUNT**	**TOTAL**	**AMOUNT**	**TOTAL**
Substructure														
0510 Structure Excavation	yd^3	$ 35.00	39	$ 1,365.00	39	$ 1,365.00	39	$ 1,365.00	39	$ 1,365.00	39	$ 1,365.00	39	$ 1,365.00
0510 Granular Wall Backfill	yd^3	$ 45.00	56	$ 2,520.00	56	$ 2,520.00	56	$ 2,520.00	56	$ 2,520.00	56	$ 2,520.00	56	$ 2,520.00
0520-0100000A Furnish Pile Driving Equipment	Lump Sum	$ 15,000.00	All	$ 15,000.00	All	$ 15,000.00	All	$ 15,000.00	All	$ 15,000.00	All	$ 15,000.00	All	$ 15,000.00
0520 Furnish PP 12-3/4 X 0.375 Steel Piles	ft	$ 60.00	400	$ 24,000.00	400	$ 24,000.00	400	$ 24,000.00	400	$ 24,000.00	400	$ 24,000.00	400	$ 24,000.00
0520 Drive PP 12-3/4 X 0.375 Steel Piles	Each	$ 800.00	10	$ 8,000.00	10	$ 8,000.00	10	$ 8,000.00	10	$ 8,000.00	10	$ 8,000.00	10	$ 8,000.00
0530 Reinforcement	lbs	$ 1.10	8172	$ 8,989.20	8172	$ 8,989.20	8172	$ 8,989.20	8172	$ 8,989.20	8177	$ 8,994.70	8177	$ 8,994.70
0540 General Structural Concrete, Class 3300	yd^3	$ 650.00	15	$ 9,750.00	15	$ 9,750.00	15	$ 9,750.00	15	$ 9,750.00	15	$ 9,750.00	15	$ 9,750.00
0540 Foundation Concrete, Class 4000	yd^3	$ 500.00	68	$ 34,000.00	68	$ 34,000.00	68	$ 34,000.00	68	$ 34,000.00	68	$ 34,000.00	68	$ 34,000.00
Moblization (10%) (Substructure)	Lump Sum	Lump Sum	All	$ 11,513.80	All	$ 11,513.80	All	$ 11,513.80	All	$ 11,513.80	All	$ 11,514.41	All	$ 11,514.41
Superstructure														
0530 Reinforcement	lbs	$ 1.10	17801	$ 19,581.10	17801	$ 19,581.10	17801	$ 19,581.10	17801	$ 19,581.10	17801	$ 19,581.10	17801	$ 19,581.10
0540 Deck Concrete, Class HPC 4000	yd^3	$ 575.00	55	$ 31,625.00	55	$ 31,625.00	55	$ 31,625.00	55	$ 31,625.00	56	$ 32,200.00	56	$ 32,200.00
0540 General Structural Concrete, Class 3300	yd^3	$ 650.00	8	$ 5,200.00	8	$ 5,200.00	8	$ 5,200.00	8	$ 5,200.00	7	$ 4,550.00	7	$ 4,550.00
0540 Saw Cut Texturing	yd^2	$ 9.00	210	$ 1,890.00	210	$ 1,890.00	210	$ 1,890.00	210	$ 1,890.00	210	$ 1,890.00	210	$ 1,890.00
0550 26 Inch Precast Prestressed Slabs	ft	$ 220.00	138	$ 30,360.00	138	$ 30,360.00	138	$ 30,360.00	138	$ 30,360.00	183	$ 40,260.00	183	$ 40,260.00
0587 Type "F" Concrete Rail	ft	$ 105.00	92	$ 9,660.00	213	$ 22,365.00	213	$ 22,365.00	213	$ 22,365.00	213	$ 22,365.00	213	$ 22,365.00
0545 Reinforced Concrete Bridge End Panels	yd^2	$ 220.00	0	$ -	315	$ 69,300.00	315	$ 69,300.00	315	$ 69,300.00	315	$ 69,300.00	315	$ 69,300.00
Moblization (10%) (Superstructure)	Lump Sum	Lump Sum	All	$ 10,924.01	All	$ 20,035.68	All	$ 20,035.68	All	$ 20,035.68	All	$ 21,127.34	All	$ 21,127.34
Total Substructure Cost				$ 115,138.00		$ 115,138.00		$ 115,138.00		$ 115,138.00		$ 115,144.11		$ 115,144.11
Total Superstructure Cost				$ 109,240.11		$ 200,356.78		$ 200,356.78		$ 200,356.78		$ 211,273.44		$ 211,273.44
Total Structure Cost				$ 224,378.11		$ 315,494.78		$ 315,494.78		$ 315,494.78		$ 326,417.56		$ 326,417.56
Cost per Square Foot				$ 104.90		$ 147.49		$ 147.49		$ 147.49		$ 152.60		$ 152.60

HDR

Table 7

Bridge Configuration: 80-Foot Simple Span with 33-Inch Precast Prestressed Box Beam

Estimating Engineer: Mary Ann Triska

			BASIC VEHICLE		TYPE 3		TYPE 3S2		OR CTP-2B		OR STP-4C		OR STP-4E	
			# Boxes = 4		# Boxes = 6		# Boxes = 6		# Boxes = 6		# Boxes = 7		# Boxes = 8	
			Area = 3,780 sq. ft.		Area = 3,780 sq. ft.		Area = 3,780 sq. ft.		Area = 3,780 sq. ft.		Area = 3,780 sq. ft.		Area = 3,780 sq. ft.	
ITEM	**UNITS**	**UNIT COST**	**AMOUNT**	**TOTAL**	**AMOUNT**	**TOTAL**	**AMOUNT**	**TOTAL**	**AMOUNT**	**TOTAL**	**AMOUNT**	**TOTAL**	**AMOUNT**	**TOTAL**
Substructure														
0510 Structure Excavation	yd^3	$ 35.00	39	$ 1,365.00	39	$ 1,365.00	39	$ 1,365.00	39	$ 1,365.00	39	$ 1,365.00	39	$ 1,365.00
0510 Granular Wall Backfill	yd^3	$ 45.00	62	$ 2,790.00	63	$ 2,835.00	63	$ 2,835.00	63	$ 2,835.00	63	$ 2,835.00	63	$ 2,835.00
0520-0100000A Furnish Pile Driving Equipment	Lump Sum	$ 15,000.00	All	$ 15,000.00	All	$ 15,000.00	All	$ 15,000.00	All	$ 15,000.00	All	$ 15,000.00	All	$ 15,000.00
0520 Furnish PP 12-3/4 X 0.375 Steel Piles	ft	$ 60.00	480	$ 28,800.00	560	$ 33,600.00	560	$ 33,600.00	560	$ 33,600.00	640	$ 38,400.00	720	$ 43,200.00
0520 Drive PP 12-3/4 X 0.375 Steel Piles	Each	$ 800.00	12	$ 9,600.00	14	$ 11,200.00	14	$ 11,200.00	14	$ 11,200.00	16	$ 12,800.00	18	$ 14,400.00
0530 Reinforcement	lbs	$ 1.10	8509	$ 9,359.90	8534	$ 9,387.40	8534	$ 9,387.40	8534	$ 9,387.40	8540	$ 9,394.00	8546	$ 9,400.60
0540 General Structural Concrete, Class 3300	yd^3	$ 650.00	17	$ 11,050.00	17	$ 11,050.00	17	$ 11,050.00	17	$ 11,050.00	17	$ 11,050.00	17	$ 11,050.00
0540 Foundation Concrete, Class 4000	yd^3	$ 500.00	68	$ 34,000.00	68	$ 34,000.00	68	$ 34,000.00	68	$ 34,000.00	68	$ 34,000.00	68	$ 34,000.00
Moblization (10%) (Substructure)	Lump Sum	Lump Sum	All	$ 12,440.54	All	$ 13,159.71	All	$ 13,159.71	All	$ 13,159.71	All	$ 13,871.56	All	$ 14,583.40
Superstructure														
0530 Reinforcement	lbs	$ 1.10	31459	$ 34,604.90	25190	$ 27,709.00	25190	$ 27,709.00	25190	$ 27,709.00	19156	$ 21,071.60	18221	$ 20,043.10
0540 Deck Concrete, Class HPC 4000	yd^3	$ 575.00	98	$ 56,350.00	106	$ 60,950.00	106	$ 60,950.00	106	$ 60,950.00	110	$ 63,250.00	114	$ 65,550.00
0540 General Structural Concrete, Class 3300	yd^3	$ 650.00	13	$ 8,450.00	10	$ 6,500.00	10	$ 6,500.00	10	$ 6,500.00	8	$ 5,200.00	6	$ 3,900.00
0540 Saw Cut Texturing	yd^2	$ 9.00	372	$ 3,348.00	372	$ 3,348.00	372	$ 3,348.00	372	$ 3,348.00	372	$ 3,348.00	372	$ 3,348.00
0550 33 Inch Precast Prestressed Box Beam	ft	$ 265.00	324	$ 85,860.00	486	$ 128,790.00	486	$ 128,790.00	486	$ 128,790.00	567	$ 150,255.00	648	$ 171,720.00
0587 Type "F" Concrete Rail	ft	$ 105.00	162	$ 17,010.00	283	$ 29,715.00	283	$ 29,715.00	283	$ 29,715.00	283	$ 29,715.00	283	$ 29,715.00
0545 Reinforced Concrete Bridge End Panels	yd^2	$ 220.00	0	$ -	315	$ 69,300.00	315	$ 69,300.00	315	$ 69,300.00	315	$ 69,300.00	315	$ 69,300.00
Moblization (10%) (Superstructure)	Lump Sum	Lump Sum	All	$ 22,846.99	All	$ 36,256.89	All	$ 36,256.89	All	$ 36,256.89	All	$ 38,015.51	All	$ 40,397.34
Total Substructure Cost				$ 124,405.44		$ 131,597.11		$ 131,597.11		$ 131,597.11		$ 138,715.56		$ 145,834.00
Total Superstructure Cost				$ 228,469.89		$ 362,568.89		$ 362,568.89		$ 362,568.89		$ 380,155.11		$ 403,973.44
Total Structure Cost				$ 352,875.33		$ 494,166.00		$ 494,166.00		$ 494,166.00		$ 518,870.67		$ 549,807.44
Cost per Square Foot				$ 93.35		$ 130.72		$ 130.72		$ 130.72		$ 137.26		$ 145.44

HDR

Table 8

Bridge Configuration: 80-Foot Simple Span with 39-Inch Precast Prestressed Box Beam

Estimating Engineer: Mary Ann Triska

			BASIC VEHICLE		TYPE 3		TYPE 3S2		OR CTP-2B		OR STP-4C		OR STP-4E	
			# Boxes = 4		# Boxes = 5		# Boxes = 5		# Boxes = 5		# Boxes = 5		# Boxes = 6	
			Area = 3,780 sq. ft.		Area = 3,780 sq. ft.		Area = 3,780 sq. ft.		Area = 3,780 sq. ft.		Area = 3,780 sq. ft.		Area = 3,780 sq. ft.	
ITEM	**UNITS**	**UNIT COST**	**AMOUNT**	**TOTAL**	**AMOUNT**	**TOTAL**	**AMOUNT**	**TOTAL**	**AMOUNT**	**TOTAL**	**AMOUNT**	**TOTAL**	**AMOUNT**	**TOTAL**
Substructure														
0510 Structure Excavation	yd^3	$ 35.00	39	$ 1,365.00	39	$ 1,365.00	39	$ 1,365.00	39	$ 1,365.00	39	$ 1,365.00	39	$ 1,365.00
0510 Granular Wall Backfill	yd^3	$ 45.00	66	$ 2,970.00	66	$ 2,970.00	66	$ 2,970.00	66	$ 2,970.00	66	$ 2,970.00	66	$ 2,970.00
0520-0100000A Furnish Pile Driving Equipment	Lump Sum	$ 15,000.00	All	$ 15,000.00	All	$ 15,000.00	All	$ 15,000.00	All	$ 15,000.00	All	$ 15,000.00	All	$ 15,000.00
0520 Furnish PP 12-3/4 X 0.375 Steel Piles	ft	$ 60.00	480	$ 28,800.00	560	$ 33,600.00	560	$ 33,600.00	560	$ 33,600.00	640	$ 38,400.00	640	$ 38,400.00
0520 Drive PP 12-3/4 X 0.375 Steel Piles	Each	$ 800.00	12	$ 9,600.00	14	$ 11,200.00	14	$ 11,200.00	14	$ 11,200.00	16	$ 12,800.00	16	$ 12,800.00
0530 Reinforcement	lbs	$ 1.10	8671	$ 9,538.10	8678	$ 9,545.80	8678	$ 9,545.80	8678	$ 9,545.80	8678	$ 9,545.80	8684	$ 9,552.40
0540 General Structural Concrete, Class 3300	yd^3	$ 650.00	18	$ 11,700.00	18	$ 11,700.00	18	$ 11,700.00	18	$ 11,700.00	18	$ 11,700.00	18	$ 11,700.00
0540 Foundation Concrete, Class 4000	yd^3	$ 500.00	68	$ 34,000.00	68	$ 34,000.00	68	$ 34,000.00	68	$ 34,000.00	68	$ 34,000.00	68	$ 34,000.00
Moblization (10%) (Substructure)	Lump Sum	Lump Sum	All	$ 12,552.57	All	$ 13,264.53	All	$ 13,264.53	All	$ 13,264.53	All	$ 13,975.64	All	$ 13,976.38
Superstructure														
0530 Reinforcement	lbs	$ 1.10	31459	$ 34,604.90	29045	$ 31,949.50	29045	$ 31,949.50	29045	$ 31,949.50	29045	$ 31,949.50	25190	$ 27,709.00
0540 Deck Concrete, Class HPC 4000	yd^3	$ 575.00	100	$ 57,500.00	102	$ 58,650.00	102	$ 58,650.00	102	$ 58,650.00	102	$ 58,650.00	106	$ 60,950.00
0540 General Structural Concrete, Class 3300	yd^3	$ 650.00	15	$ 9,750.00	13	$ 8,450.00	13	$ 8,450.00	13	$ 8,450.00	13	$ 8,450.00	11	$ 7,150.00
0540 Saw Cut Texturing	yd^2	$ 9.00	372	$ 3,348.00	372	$ 3,348.00	372	$ 3,348.00	372	$ 3,348.00	372	$ 3,348.00	372	$ 3,348.00
0550 39 Inch Precast Prestressed Box Beam	ft	$ 275.00	324	$ 89,100.00	405	$ 111,375.00	405	$ 111,375.00	405	$ 111,375.00	405	$ 111,375.00	486	$ 133,650.00
0587 Type "F" Concrete Rail	ft	$ 105.00	162	$ 17,010.00	283	$ 29,715.00	283	$ 29,715.00	283	$ 29,715.00	283	$ 29,715.00	283	$ 29,715.00
0545 Reinforced Concrete Bridge End Panels	yd^2	$ 220.00	0	$ -	315	$ 69,300.00	315	$ 69,300.00	315	$ 69,300.00	315	$ 69,300.00	315	$ 69,300.00
Moblization (10%) (Superstructure)	Lump Sum	Lump Sum	All	$ 23,479.21	All	$ 34,754.17	All	$ 34,754.17	All	$ 34,754.17	All	$ 34,754.17	All	$ 36,869.11
Total Substructure Cost				$ 125,525.67		$ 132,645.33		$ 132,645.33		$ 132,645.33		$ 139,756.44		$ 139,763.78
Total Superstructure Cost				$ 234,792.11		$ 347,541.67		$ 347,541.67		$ 347,541.67		$ 347,541.67		$ 368,691.11
Total Structure Cost				$ 360,317.78		$ 480,187.00		$ 480,187.00		$ 480,187.00		$ 487,298.11		$ 508,454.89
Cost per Square Foot				$ 95.32		$ 127.02		$ 127.02		$ 127.02		$ 128.91		$ 134.50

HDR

Table 9

Bridge Configuration: 80-Foot Simple Span with 42-Inch Precast Prestressed Box Beam

Estimating Engineer: Mary Ann Triska

			BASIC VEHICLE		TYPE 3		TYPE 3S2		OR CTP-2B		OR STP-4C		OR STP-4E	
			# Boxes = 3		# Boxes = 4		# Boxes = 4		# Boxes = 4		# Boxes = 5		# Boxes = 5	
			Area = 3,780 sq. ft.		Area = 3,780 sq. ft.		Area = 3,780 sq. ft.		Area = 3,780 sq. ft.		Area = 3,780 sq. ft.		Area = 3,780 sq. ft.	
ITEM	**UNITS**	**UNIT COST**	**AMOUNT**	**TOTAL**	**AMOUNT**	**TOTAL**	**AMOUNT**	**TOTAL**	**AMOUNT**	**TOTAL**	**AMOUNT**	**TOTAL**	**AMOUNT**	**TOTAL**
Substructure														
0510 Structure Excavation	yd^3	$ 35.00	39	$ 1,365.00	39	$ 1,365.00	39	$ 1,365.00	39	$ 1,365.00	39	$ 1,365.00	39	$ 1,365.00
0510 Granular Wall Backfill	yd^3	$ 45.00	68	$ 3,060.00	68	$ 3,060.00	68	$ 3,060.00	68	$ 3,060.00	68	$ 3,060.00	68	$ 3,060.00
0520-0100000A Furnish Pile Driving Equipment	Lump Sum	$ 15,000.00	All	$ 15,000.00	All	$ 15,000.00	All	$ 15,000.00	All	$ 15,000.00	All	$ 15,000.00	All	$ 15,000.00
0520 Furnish PP 12-3/4 X 0.375 Steel Piles	ft	$ 60.00	480	$ 28,800.00	560	$ 33,600.00	560	$ 33,600.00	560	$ 33,600.00	640	$ 38,400.00	640	$ 38,400.00
0520 Drive PP 12-3/4 X 0.375 Steel Piles	Each	$ 800.00	12	$ 9,600.00	14	$ 11,200.00	14	$ 11,200.00	14	$ 11,200.00	16	$ 12,800.00	16	$ 12,800.00
0530 Reinforcement	lbs	$ 1.10	8736	$ 9,609.60	8755	$ 9,630.50	8755	$ 9,630.50	8755	$ 9,630.50	8762	$ 9,638.20	8762	$ 9,638.20
0540 General Structural Concrete, Class 3300	yd^3	$ 650.00	19	$ 12,350.00	19	$ 12,350.00	19	$ 12,350.00	19	$ 12,350.00	19	$ 12,350.00	19	$ 12,350.00
0540 Foundation Concrete, Class 4000	yd^3	$ 500.00	68	$ 34,000.00	68	$ 34,000.00	68	$ 34,000.00	68	$ 34,000.00	68	$ 34,000.00	68	$ 34,000.00
Moblization (10%) (Substructure)	Lump Sum	Lump Sum	All	$ 12,642.73	All	$ 13,356.17	All	$ 13,356.17	All	$ 13,356.17	All	$ 14,068.13	All	$ 14,068.13
Superstructure														
0530 Reinforcement	lbs	$ 1.10	31459	$ 34,604.90	31459	$ 34,604.90	31459	$ 34,604.90	31459	$ 34,604.90	29045	$ 31,949.50	29045	$ 31,949.50
0540 Deck Concrete, Class HPC 4000	yd^3	$ 575.00	97	$ 55,775.00	101	$ 58,075.00	101	$ 58,075.00	101	$ 58,075.00	104	$ 59,800.00	104	$ 59,800.00
0540 General Structural Concrete, Class 3300	yd^3	$ 650.00	18	$ 11,700.00	16	$ 10,400.00	16	$ 10,400.00	16	$ 10,400.00	14	$ 9,100.00	14	$ 9,100.00
0540 Saw Cut Texturing	yd^2	$ 9.00	372	$ 3,348.00	372	$ 3,348.00	372	$ 3,348.00	372	$ 3,348.00	372	$ 3,348.00	372	$ 3,348.00
0550 42 Inch Precast Prestressed Box Beam	ft	$ 300.00	243	$ 72,900.00	324	$ 97,200.00	324	$ 97,200.00	324	$ 97,200.00	405	$ 121,500.00	405	$ 121,500.00
0587 Type "F" Concrete Rail	ft	$ 105.00	162	$ 17,010.00	283	$ 29,715.00	283	$ 29,715.00	283	$ 29,715.00	283	$ 29,715.00	283	$ 29,715.00
0545 Reinforced Concrete Bridge End Panels	yd^2	$ 220.00	0	$ -	315	$ 69,300.00	315	$ 69,300.00	315	$ 69,300.00	315	$ 69,300.00	315	$ 69,300.00
Moblization (10%) (Superstructure)	Lump Sum	Lump Sum	All	$ 21,704.21	All	$ 33,626.99	All	$ 33,626.99	All	$ 33,626.99	All	$ 36,079.17	All	$ 36,079.17
Total Substructure Cost				$ 126,427.33		$ 133,561.67		$ 133,561.67		$ 133,561.67		$ 140,681.33		$ 140,681.33
Total Superstructure Cost				$ 217,042.11		$ 336,269.89		$ 336,269.89		$ 336,269.89		$ 360,791.67		$ 360,791.67
Total Structure Cost				$ 343,469.44		$ 469,831.56		$ 469,831.56		$ 469,831.56		$ 501,473.00		$ 501,473.00
Cost per Square Foot				$ 90.86		$ 124.29		$ 124.29		$ 124.29		$ 132.66		$ 132.66

6. Appendix A

FINAL REPORT
for
ODOT BRIDGE COST ALLOCATION STUDY

November 8, 2002

REGISTERED PROFESSIONAL ENGINEER
12,944

OREGON
JULY 26, 1985
PETER R. PAGTER

EXPIRES: 12/31/02

Prepared by:
Peter R Pagter, P.E., S.E
Kevin M. Groom, P.E.
Peter G. Slocum, P.E.

Reviewed by:
Lawrence H. Fox, P.E.

OBEC Consulting Engineers
920 Country Club Road, Suite 100B
Eugene, OR 97401-2208
Ph: (541) 683-6090
Fax: (541) 683-6576

TABLE OF CONTENTS

Page No.

Introduction....1

Design Parameters....1

OBEC Design Assumptions....2

Results and Conclusions....3

TABLES

Table 1 – 100′ Simple Span Cost Estimate
Table 2 – 150′ Simple Span Cost Estimate
Table 3 – 60′-90′-60′ Continuous Cost Estimate
Table 4 – Summary of Results
Table 5 – Comparisons of Typical Sections for 150′ Single Span Option

FIGURES — Figure No.

Design Vehicles....1
Bridge Costs Per Square Foot....2
Live Load-to-Dead Load Ratios - 100′ Span....3
Live Load- to-Dead Load Ratios - 150′ Span....4
Live Load-to-Dead Load Ratios - 60′-90′-60′ Spans....5
Superstructure-to-Substructure Cost Ratios....6
100′ Span Typical Sections....7
150′ Span Typical Sections....8
60′-90′-60′ Spans Typical Sections....9

FINAL REPORT
For
ODOT Bridge Cost Allocation Study

Introduction

OBEC Consulting Engineers was retained by the Oregon Department of Transportation (ODOT) to conduct a Bridge Cost Allocation Study for the purpose of determining bridge costs apportioned to different types of design vehicles. The study was to design three (3) different span arrangements using five (5) different truck loads and determine the most economical cost for each of the fifteen (15) bridge designs.

Design Parameters

The design parameters for the study were determined by ODOT and are summarized below:

Vehicle Type	Lane Width	Shoulder Width	Total Roadway Width
Basic (4 tons)	11'	8'	38'
Type 3 (25 tons)	12'	10'	44'
Type 3S2 (40 tons)	12'	10'	44'
Permit 2 (49 tons)	12'	10'	44'
Permit 4 (114 tons)	12'	10'	44'

- Assume Type "F" Rail for concrete decks and concrete barrier for timber decks
- End panels on all bridges except for the Basic Vehicle
- No skew
- Tangent alignment
- Assume 20' clear from soffit to roadway/surface below
- Assume mid-Willamette Valley location for acceleration and site coefficients (A=0.19, S=1.0)
- Use most economical/practical design
- Assume pile supported foundations
- Design in accordance with AASHTO *Standard Specifications for Highway Bridges*, *16th Edition* with current Interims, and the ODOT *Bridge Office Practice Manual*.
- Design for Group I loading for all vehicles

The three span arrangements to be studied are as follows:

- 100' simple span
- 150' simple span
- 60'-90'-60' continuous span

OBEC Design Assumptions

In addition to the design parameters outlined by ODOT, OBEC used the following assumptions to ensure consistency between the three designers performing the study:

Superstructure

- The following material densities shall be used for determining dead loads:
  - Asphalt Concrete Wearing Surface = 150 pcf
  - Normal weight concrete = 150 pcf
  - Prestressed girder concrete = 155 pcf
  - Structural Steel = 490 pcf
  - Timber = 50 pcf
- Concrete diaphragms are placed at ¼ points
- Steel cross-bracing to be placed at 25' maximum spacing
- 20' end panels to be used for heavy truck designs
- Bridge deck concrete shall be 4500 psi
- Deck thickness shall not be less than 6"
- Design for 2" of future asphalt concrete wearing surface on all structures, and 2" present wearing surface on timber decks
- Design decks for individual wheel loads for each truck
- Epoxy coat top deck reinforcing steel
- Use 15 ksi losses for prestressing strands at release
- Use 40 ksi losses for prestressing for final conditions
- Bridge site is in Eugene, Oregon, assumed for hauling purposes
- Two 100 plf utility lines suspended from the superstructure
- Girder concrete strength shall be between 5.0 ksi and 8.5 ksi
- Zero tension allowed in girders for truck moments less than HS20
- $3\sqrt{f'c}$ tension allowed in girders for truck moments greater than HS20
- All bridges will be jointless
- 10 kip rail load for all vehicle types
- No pedestrian loading
- No "training" of vehicles. Only one vehicle assumed in a lane at a time.

Substructure

- 12.75 × 0.375 end-bearing pipe piles with a 60 ton capacity at 40' lengths
- 12' thick minimum wingwall thickness
- 2:1 slope to determine wingwall lengths
- Active earth pressure coefficient, $K_a = 0.3$
- Three feet of soil used for live load surcharge on wingwalls
- 3' × 3' minimum pile cap size
- 4000 psi concrete for columns and crossbeams
- 3300 psi concrete everywhere else
- No slope paving or riprap

Cost Estimating

- All bid prices, except those of the prestressed girders, rolled steel beams and glulam deck, are from the ODOT 2001 Cost Data tables supplied to OBEC from the ODOT Bridge Section.
- Prestressed girder and costs were obtained by multiplying cost estimates provided by Morse Brothers by 125 percent to account for contractor profit and installation.
- Rolled steel beam costs of $1.05/lb were provided by ODOT
- Glulam deck panel prices were obtained by multiplying cost estimates from Western Wood Structures, Inc., by 125 percent to account for contractor profit and installation.

Results and Conclusions

Our preliminary submittal of results was based on the assumptions that each bridge would be constructed from prestressed precast concrete members with standard 7¾" minimum thickness concrete decks and standard girders spacing. Upon review of our preliminary submittal, ODOT directed OBEC to consider utilizing thinner decks on the precast prestressed girder sections and to also consider a rolled steel girder with timber deck section superstructure option.

The individual results for all five live load vehicles are shown in Tables 1, 2, and 3 for the 100', 150', and 60'-90'-60' span arrangements, respectively. These results represent the most economical designs of all the options considered. The design vehicles used in the study are shown in Figure 1. The tables show the separate bid items and break down the costs into substructure, superstructure, and total structure costs. Tables 1, 2, and 3, also list the costs per square foot of structure for each vehicle and a superstructure to substructure cost ratio. Live load (including impact) to dead load response ratios are listed for positive moment and shear values for the single-span bridges, and for positive moment and shear for Spans 1 and 2 and negative moment at Bent 2 in the three-span structure. The results in Tables 1, 2, and 3, are summarized in Table 4 so a side-by-side comparison for all the bridge combinations can be shown.

The results from Tables 1, 2, and 3 are shown graphically in Figures 2 through 6. Figure 2 shows the relationship of the square foot costs of the three bridges to the different vehicle weights. This chart indicates that there is a large increase in structure costs per unit area as vehicle weight increases from the Basic to the Type 3. The chart is almost flat from the Type 3 to Type 3S2 vehicle on the single-span options. After the Permit 2 vehicle, the curves flatten out for the single-span structures, suggesting that there is not much of an increase in structure cost to design a single-span bridge for a Permit 4 vehicle when compared to a Permit 2 vehicle. There is nearly a steady increase in square foot costs for the three-span bridge when increasing the vehicle weight from the Basic to the Permit 4 vehicles.

Figures 3, 4, and 5 show the relationship between the live load (including impact) to dead load ratio and the vehicle weight. These figures show a trend of a higher live load to dead load ratio as the vehicle weights increase. This suggests that structures become more efficient as the design live loads become heavier.

The superstructure-to-substructure cost ratios are shown in Figure 6. There is an abrupt increase in the ratio for the single-span bridges as the vehicle weights increase from the Basic 4-ton

vehicle to the heavier truck loads. Figure 6 also shows a trend for the ratio to decrease slightly as the vehicle weight increases from the Permit 2 (49 tons) vehicle to the Permit 4 (114 tons) vehicle for the single-span structures. For the three-span structure the trend is for the superstructure-to-substructure cost ratio to steadily decrease as the vehicles get heavier.

Results of the three-span arrangements differed slightly, and commentaries for each arrangement are outlined below:

100′ Single-span Bridge

Several alternatives were investigated to insure the most economical bridge costs were obtained. Table 5 describes these options as follows (see Figure 7 for sketches):

Alternate 1) Five (5) BT precast prestressed concrete girder lines with standard 7¾" thick concrete decks and standard spacing. The girders where optimized based on the 5 girder lines that vary in height from 48″ high BT's to 84″ high BT's. All elements of this option are within current standard ODOT bridge practice.

Alternate 2) Varying number of BT precast prestressed concrete girder lines with thin concrete decks. The girders where optimized based on minimum number of girder lines and large deck spans. For all truck loads, the girders ended up being 84″ BT's. Some elements of this option like girder spacing and deck thickness are not within standard ODOT bridge practice.

Alternate 3) Varying number of wide flange rolled steel girder lines with glulam panelized decks. The girders where optimized based on minimal number of girder lines and minimum weight. For all truck loads, the girders ended up being either 40″ or 44″ high.

As you can see from Table 5, all three alternatives were very close in cost for the Basic truck. For the heavier Legal and Permit trucks, the first two alternatives with BT precast girders were very close in cost, but the timber deck and steel girder alternative became increasingly more expensive.

The first alternative with shorter BT's and increased girder lines resulted in slightly lower costs due to the decrease in concrete volume offsetting the additional girder costs. Precast 108″ I girders were also evaluated. They were more expensive due to the high cost of the girder, and no reduction in girder lines could be made. A 30' precast slab option was also evaluated for the basic truck case but was more expensive due to the additional girder lines offsetting the deck savings. For the steel girder with timber deck option, the high cost of the steel girders and timber deck tended to offset any savings for the heavier truck designs.

150' Single-Span Bridge

The preliminary results that were based on a 7¾" deck and concrete superstructures had slightly higher costs for all the vehicles except for the Permit 4 vehicle. It was found by using a 6" deck that a girder line and one pile at each abutment were able to be removed. These savings were offset slightly by the additional steel that was required in the deck to handle the wheel loads.

The use of the 6″ deck made it necessary to use one mat of steel, all epoxy coated, to meet clearance and spacing requirements. The single mat of steel in the middle of the deck resulted in a low value of "d" used in determining the amount of steel required to resist the slab moments, and thus resulted in closely spaced transverse bars. The typical deck sections determined to be the most economical for the 150′ single-span bridge are shown in Figure 8.

Steel girders with a 3.125" glulam panel deck was investigated for the Basic Vehicle to determine if it would be more economical than the precast prestressed option. Preliminary analysis based on unconservative allowable bending stresses resulted in section that required seven W44x248 to overcome dead and live loads. The estimated cost required for the girders alone using $1.05/lb for structural steel is approximately $275,200. The estimated cost for the entire structure using precast prestressed girders is approximately $225,300, which is less that the price of just the steel girders. At this point it was decided not to spend any more time developing a final cost estimate for the steel girder/timber deck option, since it was obviously not an economical option for the 150' span. A typical section of the steel girder with timber deck option investigated for the Basic Vehicle is shown in Figure 8.

<u>60'-90'-60' Three Span Bridge</u>

The preliminary results were submitted utilizing a standard 7¾" reinforced concrete bridge deck for all designated vehicles. Bulb-T 48 prestressed girders were optimized for the Basic vehicle and the two legal vehicles, and Bulb-T 60 girders were optimized for the two permit vehicles.

After the submitting the preliminary findings, a thinner deck incorporating a single mat of epoxy reinforcement, and the girders design was investigated. Although the amount of epoxy reinforcing steel increased, the total amount of reinforcing steel decreased, lowering the total cost of the bridges for all vehicles.

All girders were redesigned using the thinner non-standard bridge deck; and in all cases, a girder line was able to be eliminated. In all cases, the most economical solution yielded Bulb-T 72 prestressed girders. We also investigated further reducing of girder lines and incorporating the BI-108 prestressed girder system. The number of girder lines was able to be further eliminated for the permit vehicles incorporating the Bulb-I 108 prestressed girder, but the increased cost of a thicker bridge deck (based upon wider girder spacing) and the relatively higher cost of the Bulb-I 108 girder yielded a slightly higher cost bridge.

The final results show that bridges incorporating thinner decks with a single mat of reinforcing steel, constructed on standard Bulb-T 72 prestressed girders was slightly more economical that the preliminary designs using a standard bridge deck thickness and Bulb-T 48 and Bulb-T 60 prestressed girders.

A steel girder with timber deck option was not investigated for the three span arrangement since it was not found to be more economical for the single-span options.

FIGURE 1

DESIGN VEHICLES

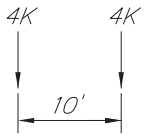

BASIC
2 Axle Vehicle
Gross Weight = 8 kips

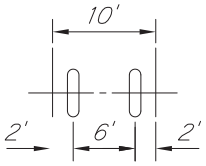

LANE LOAD WIDTH
All Vehicles

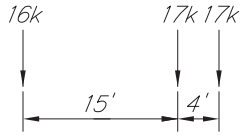

TYPE 3
3 Axle Vehicle
Gross Weight = 50 kips

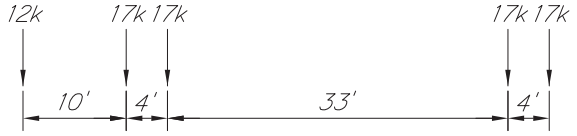

TYPE 3S2
5 Axle Vehicle
Gross Weight = 80 kips

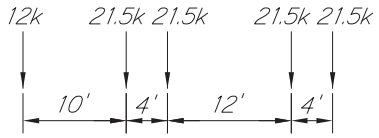

PERMIT 2
5 Axle Vehicle
Gross Weight = 98 kips

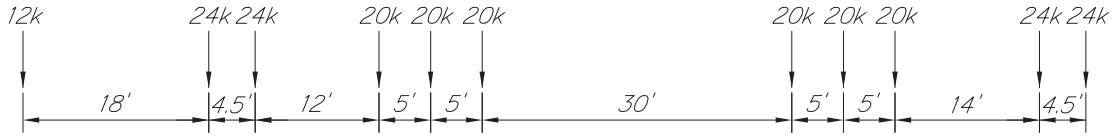

PERMIT 4
11 Axle Vehicle
Gross Weight = 228 kips

Figure 2
Bridge Costs Per Square Foot

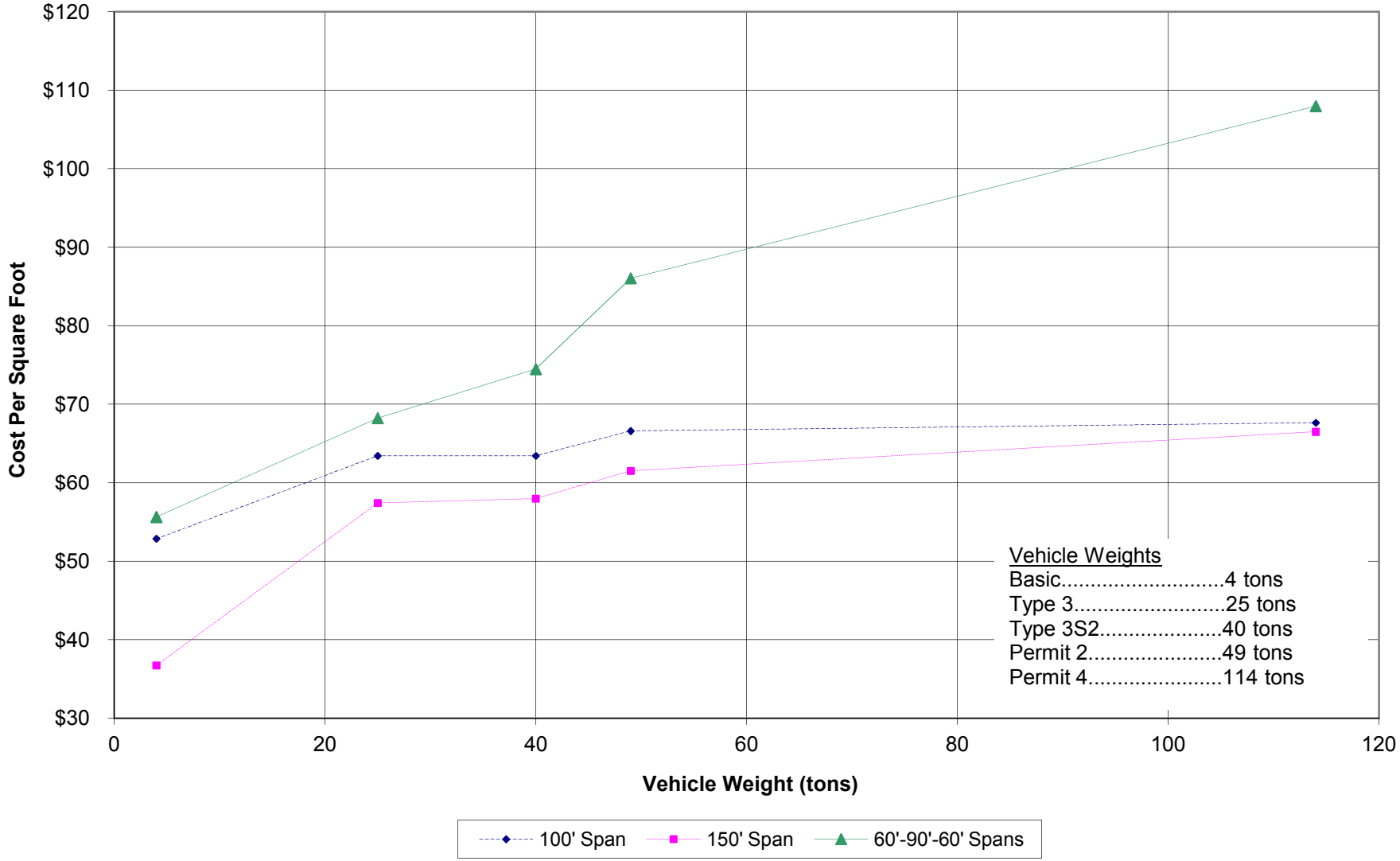

Figure 3
Live/Dead Load Ratio - 100' Span

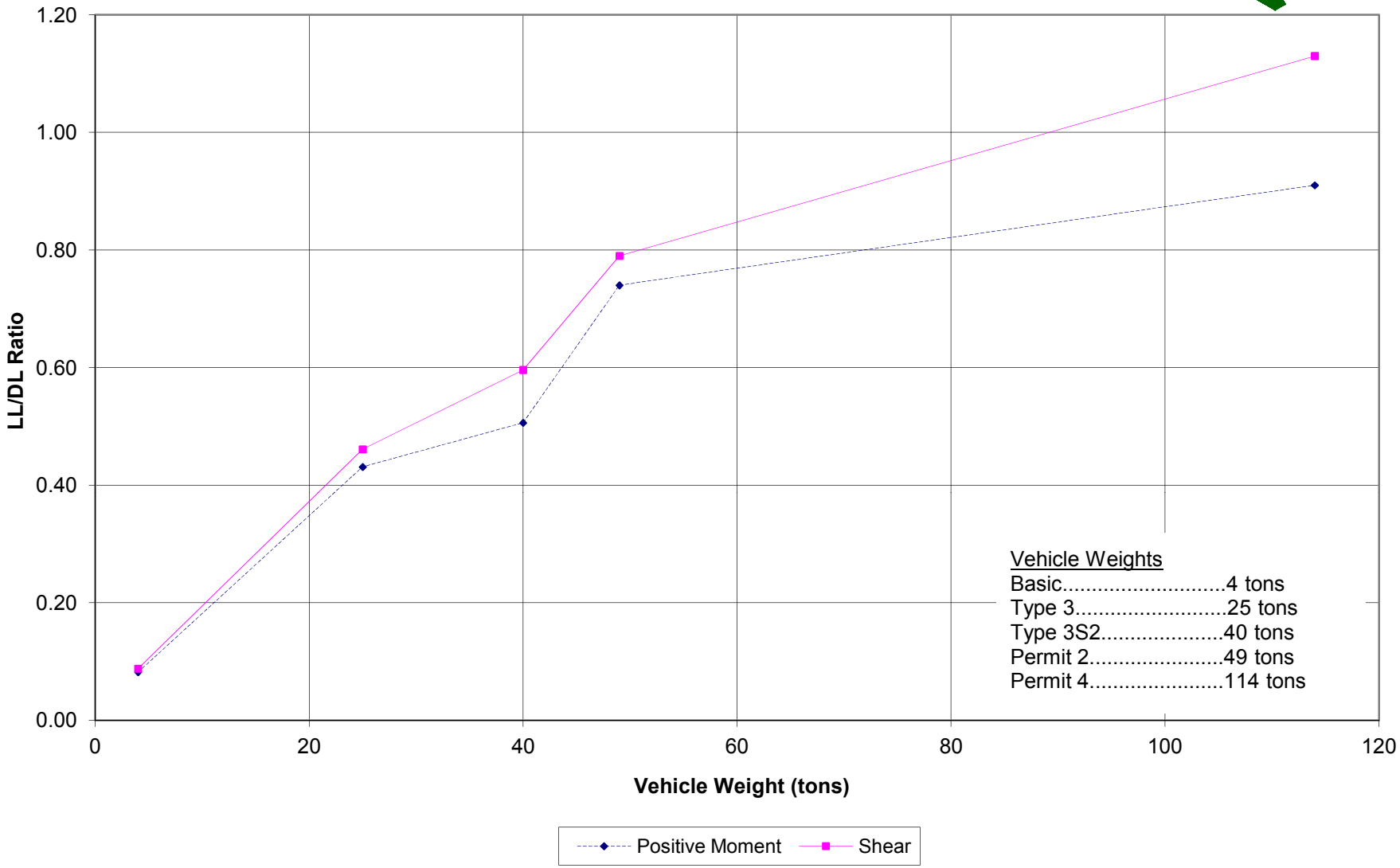

Figure 4
Live/Dead Load Ratio - 150' Span

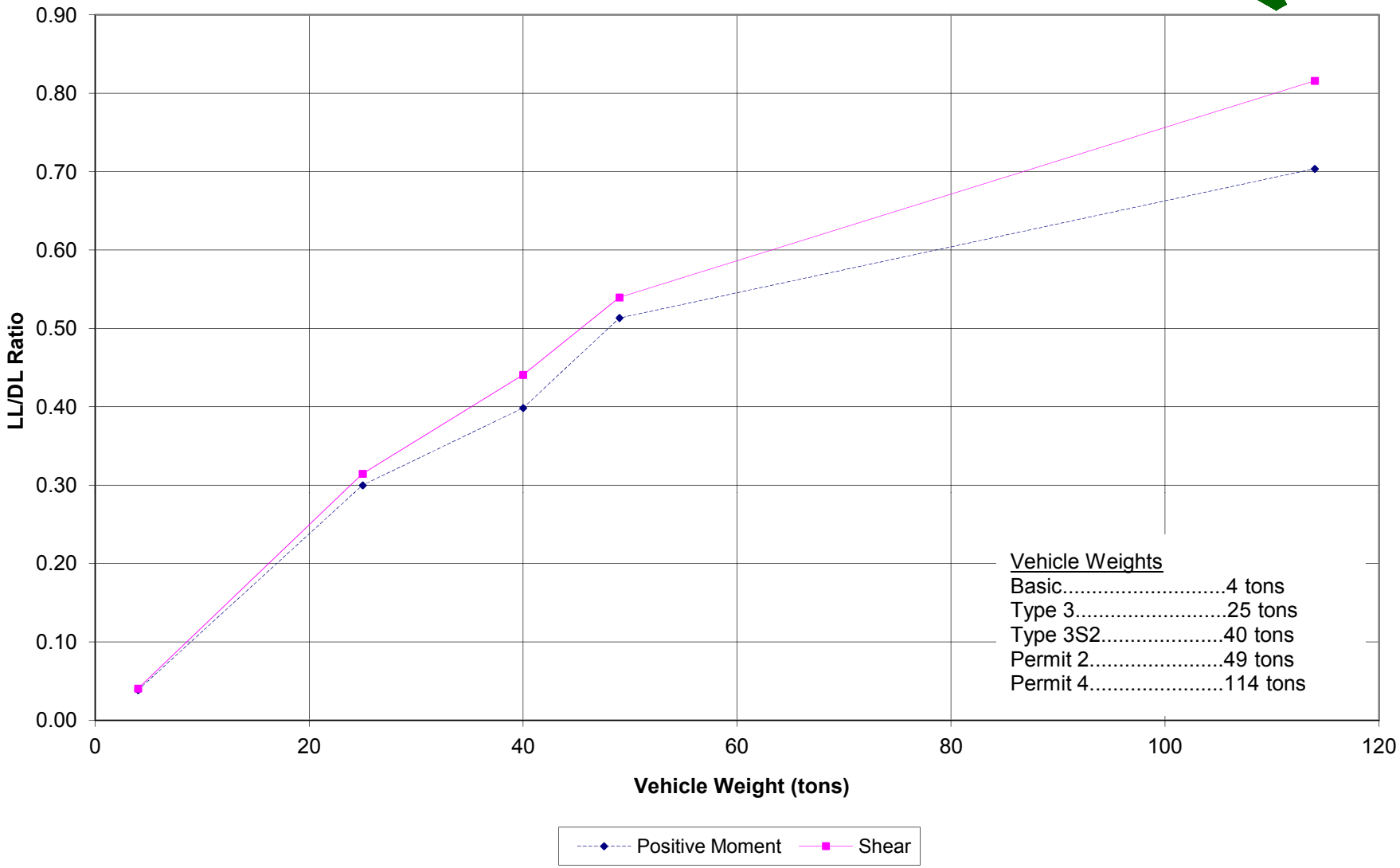

Figure 5
Live/Dead Load Ratio - 60'-90'-60' Spans

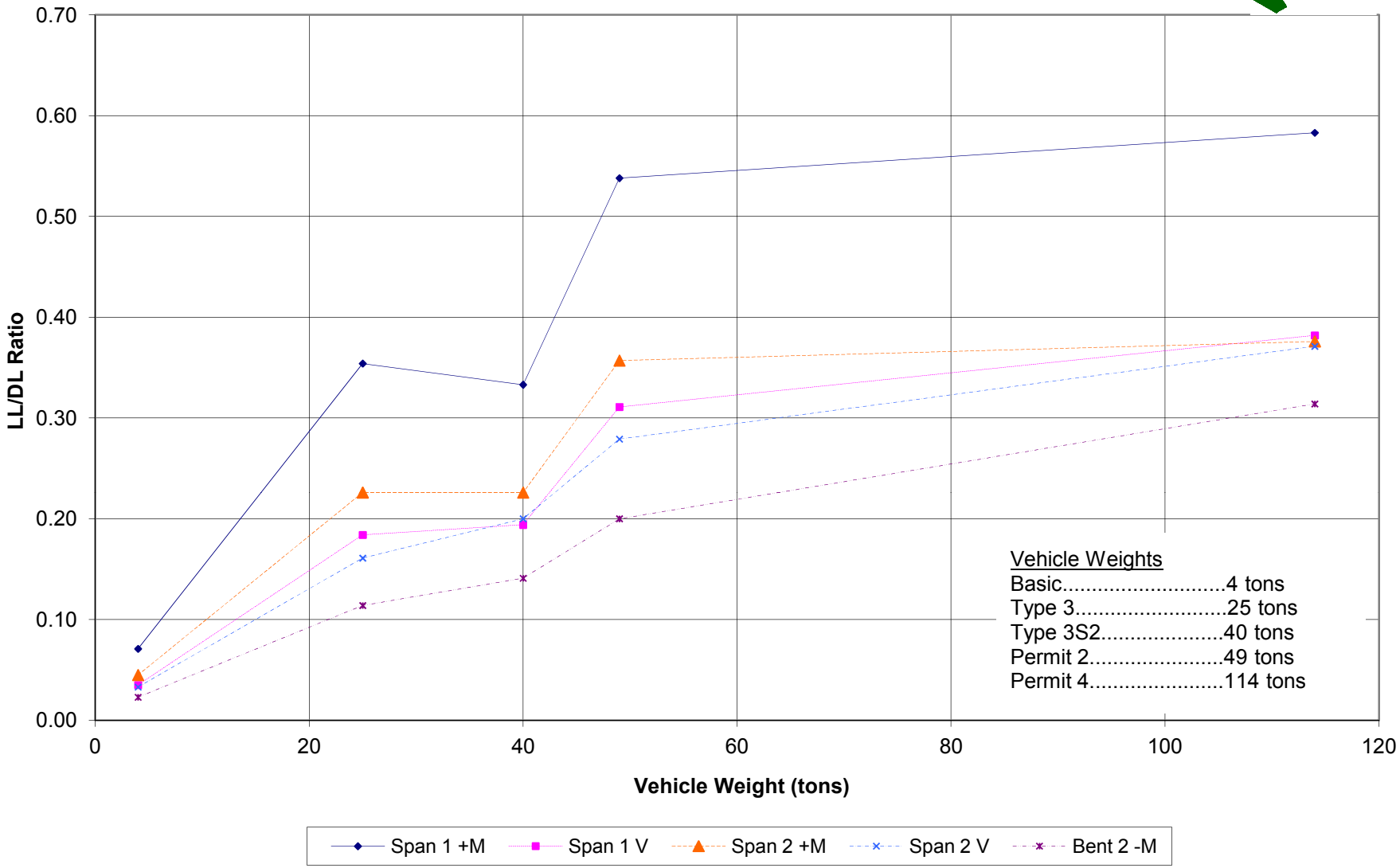

Figure 6
Superstructure to Substructure Cost Ratios

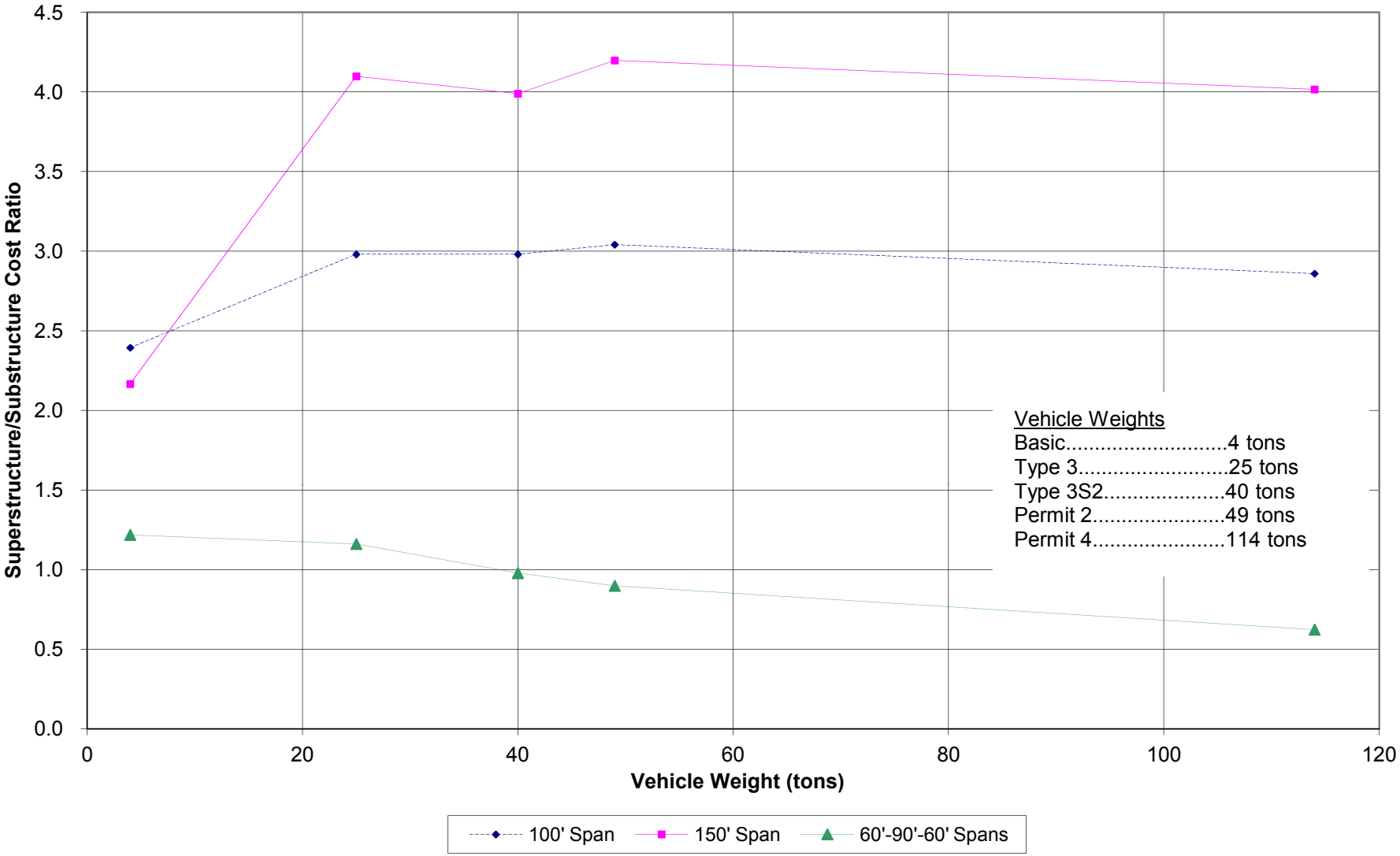

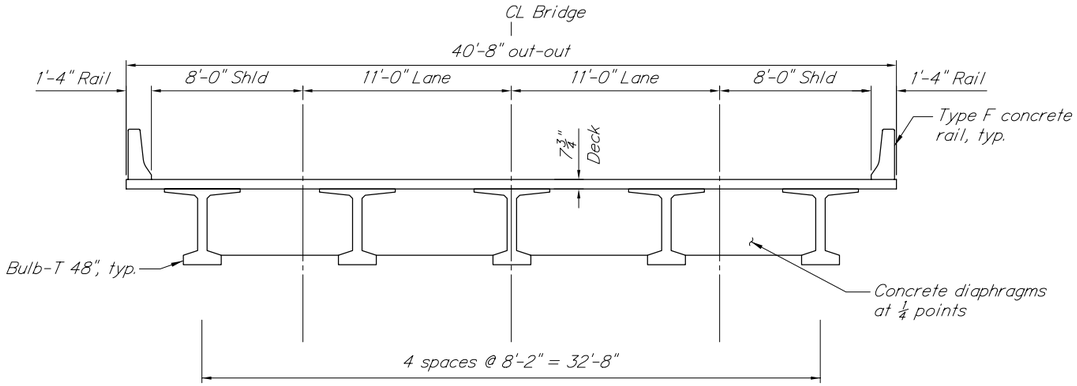

TYPICAL SECTION - BASIC

1/4"=1'-0"

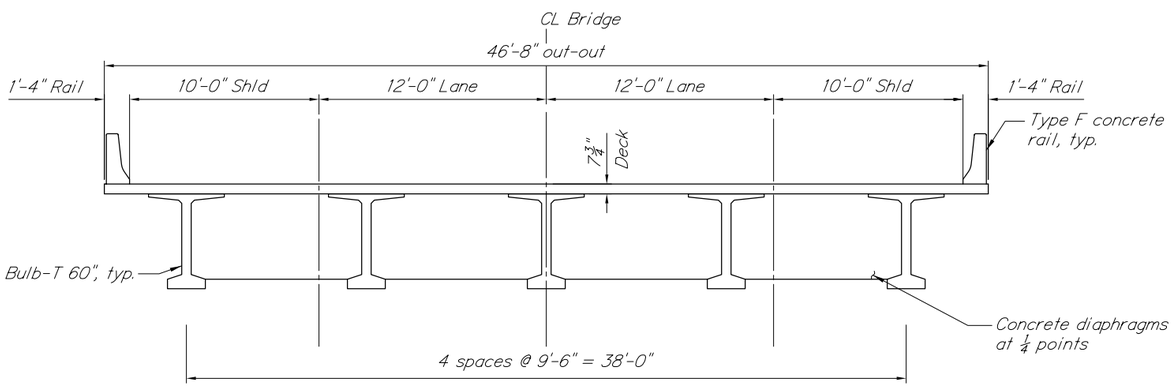

TYPICAL SECTION - TYPE 3

1/4"=1'-0"

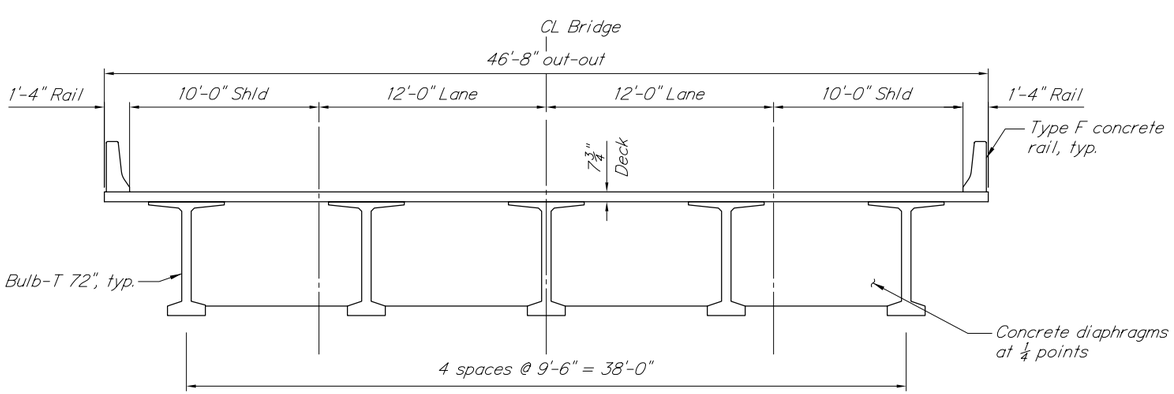

TYPICAL SECTION - TYPE 3S2

1/4"=1'-0"

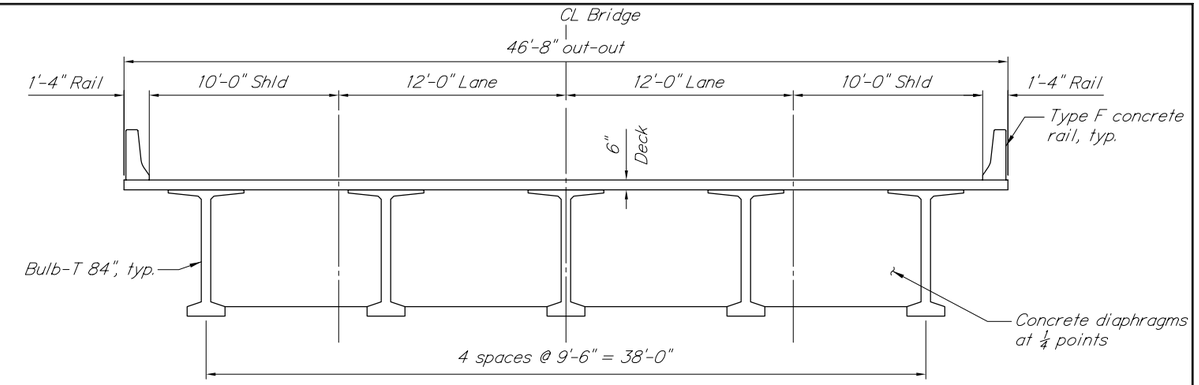

TYPICAL SECTION - PERMIT 2

1/4"=1'-0"

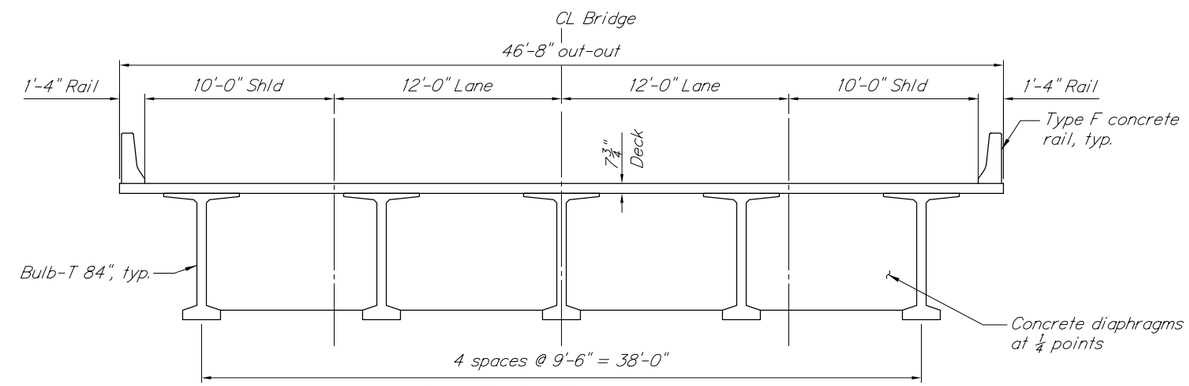

TYPICAL SECTION - PERMIT 4

1/4"=1'-0"

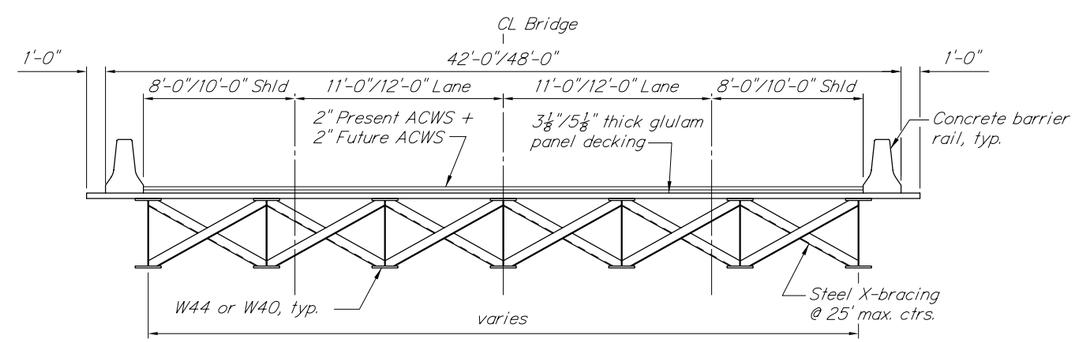

TYPICAL SECTION - STEEL GIRDERS W/TIMBER DECK

1/4"=1'-0"

OBEC CONSULTING ENGINEERS
920 COUNTRY CLUB ROAD, SUITE 100B
EUGENE, OREGON 97401
TEL (541) 683-6090 FAX (541) 683-6576
www.obec.com

ODOT COST ALLOCATION

100' SINGLE SPAN

DESIGNED: Peter G. Slocum		PROJ. NO. 19-69.10	SHT. . OF .
DRAWN: .	CHK'D: .	FILE NO. .	DATE: .

FIGURE 7

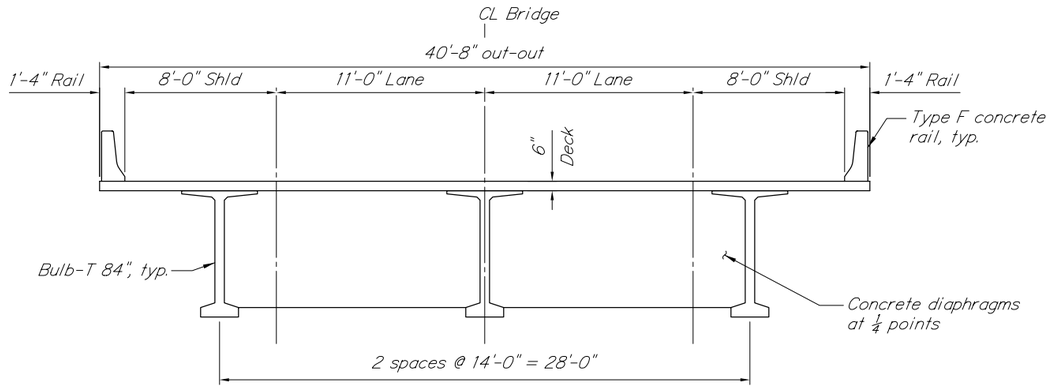

TYPICAL SECTION - BASIC

1/4"=1'-0"

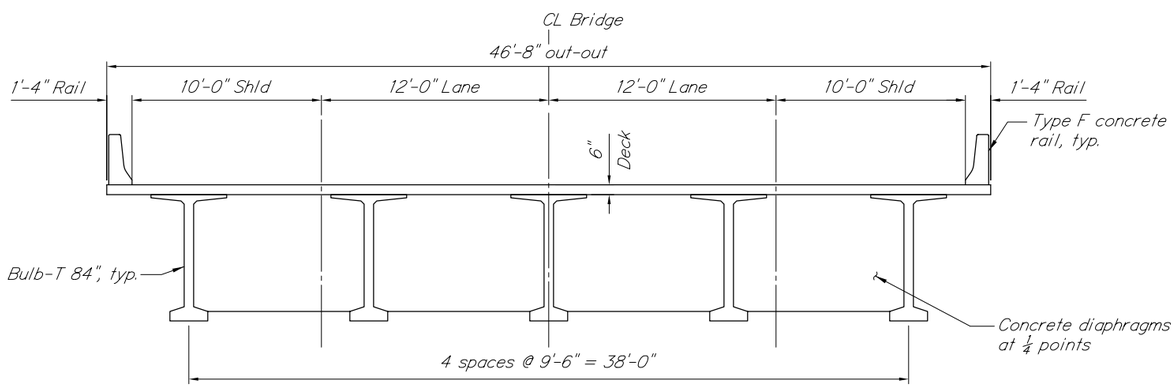

TYPICAL SECTION - TYPE 3

1/4"=1'-0"

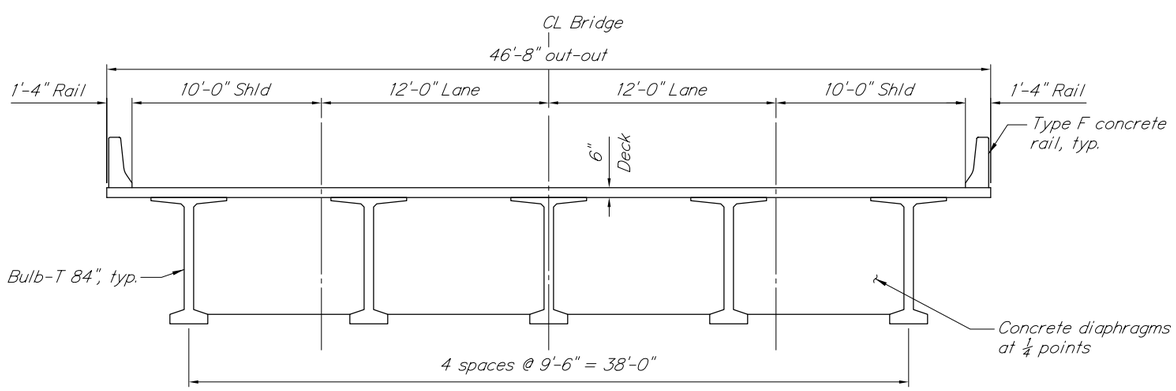

TYPICAL SECTION - TYPE 3S2

1/4"=1'-0"

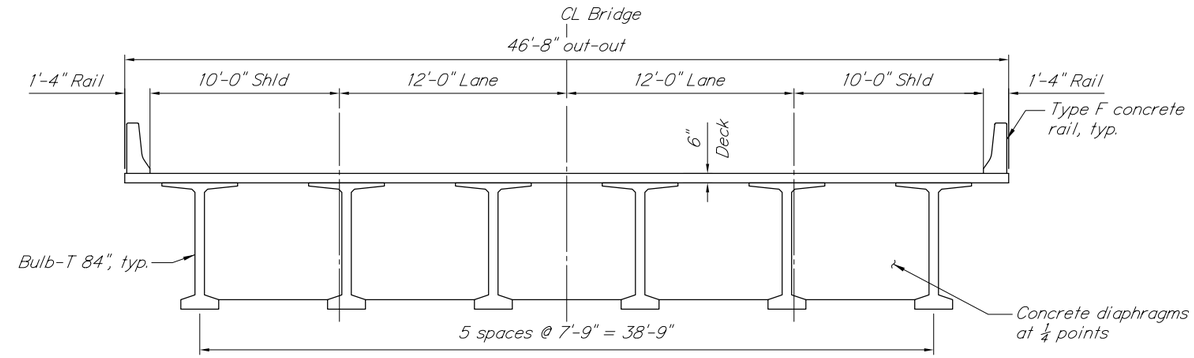

TYPICAL SECTION - PERMIT 2

1/4"=1'-0"

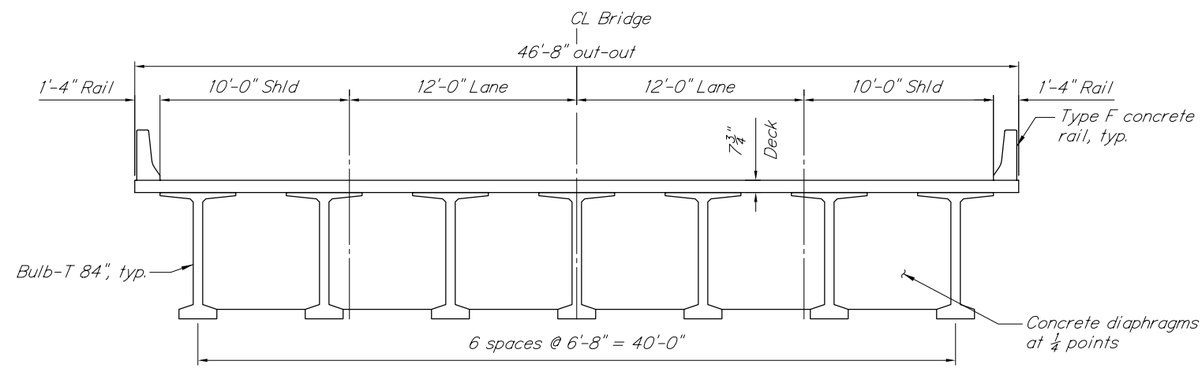

TYPICAL SECTION - PERMIT 4

1/4"=1'-0"

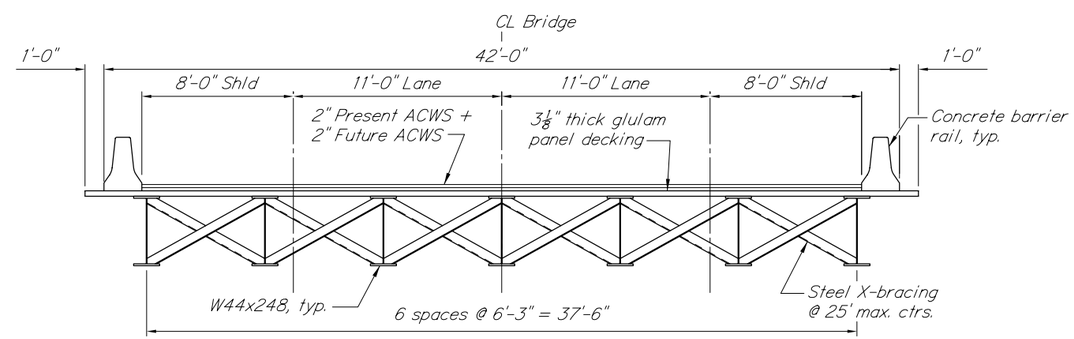

TYPICAL SECTION - STEEL GIRDERS W/TIMBER DECK

1/4"=1'-0"

OBEC CONSULTING ENGINEERS
920 COUNTRY CLUB ROAD, SUITE 100B
EUGENE, OREGON 97401
TEL (541) 683-6090 FAX (541) 683-6576
www.obec.com

ODOT COST ALLOCATION

150' SINGLE SPAN

DESIGNED: Kevin M. Groom		PROJ. NO. 19-69.10	SHT. . OF .
DRAWN: .	CHK'D: .	FILE NO. .	DATE: .

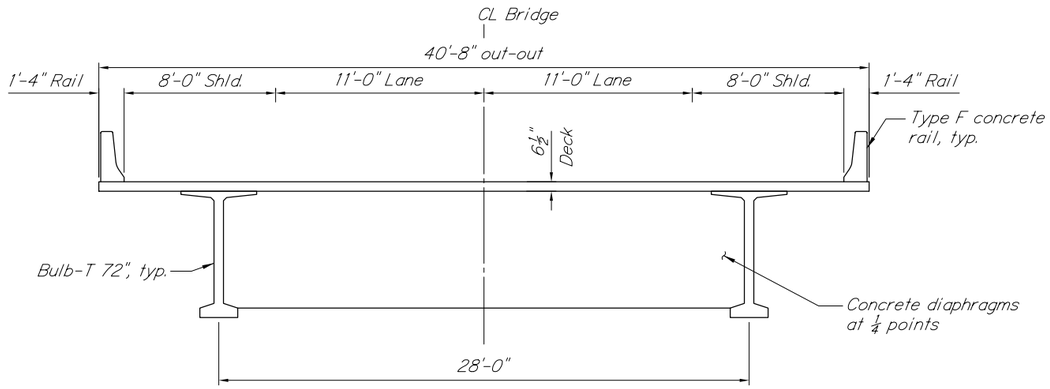

TYPICAL SECTION - BASIC

1/4"=1'-0"

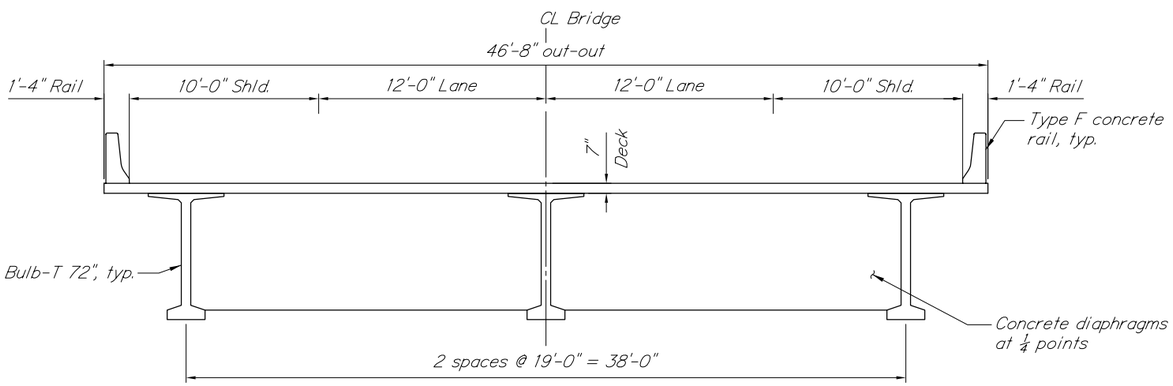

TYPICAL SECTION - TYPE 3

1/4"=1'-0"

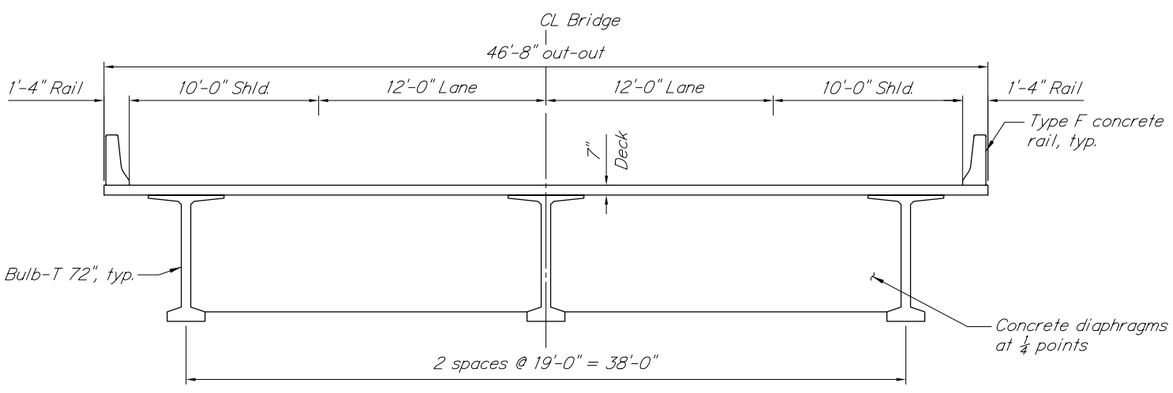

TYPICAL SECTION - TYPE 3S2

1/4"=1'-0"

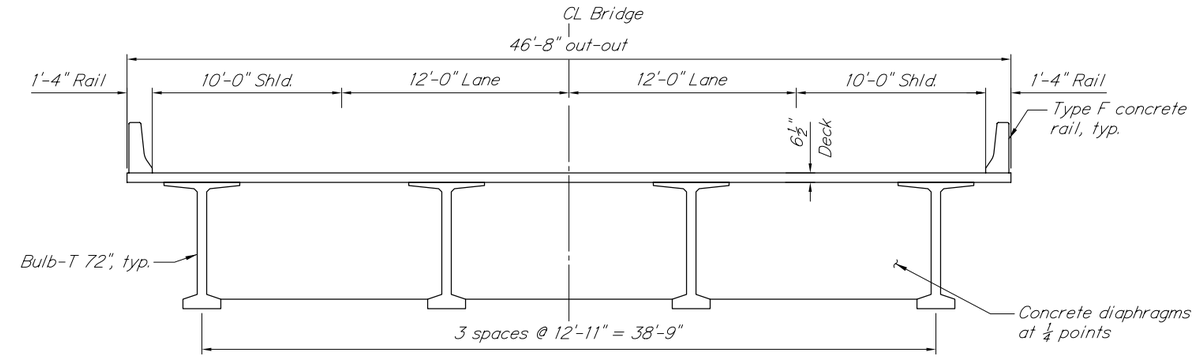

TYPICAL SECTION - PERMIT 2

1/4"=1'-0"

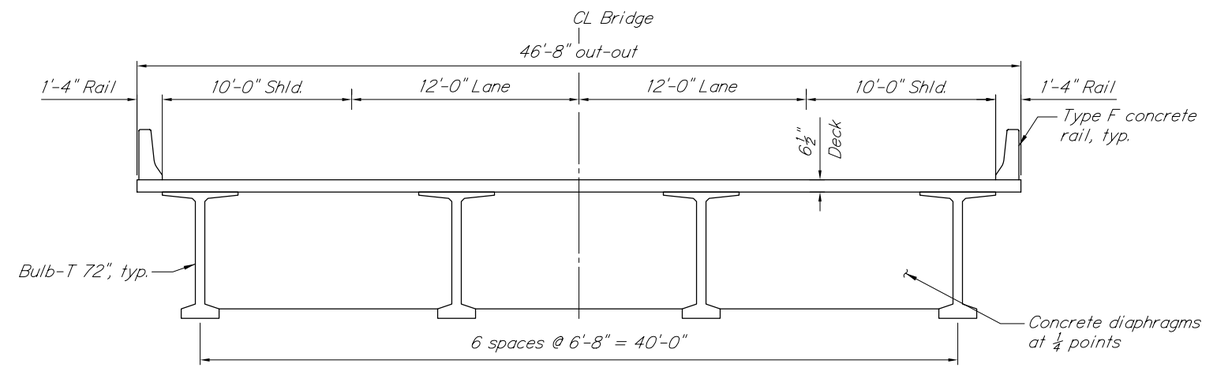

TYPICAL SECTION - PERMIT 4

1/4"=1'-0"

OBEC CONSULTING ENGINEERS
920 COUNTRY CLUB ROAD, SUITE 100B
EUGENE, OREGON 97401
TEL (541) 683-6090 FAX (541) 683-6576
www.obec.com

ODOT COST ALLOCATION

60'-90'-60' THREE SPAN

DESIGNED: Peter R. Pagter		PROJ. NO. 19-69.10	SHT. . OF .
DRAWN: .	CHK'D: .	FILE NO. .	DATE: .

FIGURE 9

ODOT Bridge Cost Allocation Study

Table 1
Bridge Configuration: 100' Simple Span
Estimating Engineer: Pete Slocum

			Basic		Type 3		Type 3S2		Permit 2		Permit 4	
			Area = 4118 sq.ft.		Area = 4725 sq.ft.		Area = 4725 sq.ft.		Area = 4725 sq.ft.		Area = 4725 sq.ft.	
Item	Units	Unit Cost	Amount	Total	Amount	Total	Amount	Total	Amount	Total	Amount	Total
Mobilization (10%) (Substructure)	Lump Sum	Lump Sum	All	$ 6,400	All	$ 7,500	All	$ 7,500	All	$ 7,800	All	$ 8,300
Mobilization (10%) (Superstructure)	Lump Sum	Lump Sum	All	$ 15,400	All	$ 22,400	All	$ 22,400	All	$ 23,700	All	$ 23,700
Structural Excavation	yd^3	$ 20.00	66	$ 1,320	70	$ 1,400	70	$ 1,400	70	$ 1,400	70	$ 1,400
Granular Structure Backfill	yd^3	$ 35.00	51	$ 1,785	58	$ 2,030	58	$ 2,030	58	$ 2,030	58	$ 2,030
Furnish Pile Driving Equipment	Lump Sum	$ 12,000.00	All	$ 12,000	All	$ 12,000	All	$ 12,000	All	$ 12,000	All	$ 12,000
Furnish Pile - PP12.75 x 0.375	ft	$ 15.25	480	$ 7,320	720	$ 10,980	720	$ 10,980	800	$ 12,200	960	$ 14,640
Drive Steel Pipe Pile	Each	$ 500.00	12	$ 6,000	18	$ 9,000	18	$ 9,000	20	$ 10,000	24	$ 12,000
Substructure Reinforcement	lbs	$ 0.65	9900	$ 6,435	12300	$ 7,995	12300	$ 7,995	12400	$ 8,060	12400	$ 8,060
Superstructure Reinforcement	lbs	$ 0.65	5900	$ 3,835	17200	$ 11,180	17200	$ 11,180	5800	$ 3,770	5800	$ 3,770
Superstructure Reinforcement - Epoxy Coated	lbs	$ 1.00	12300	$ 12,300	12300	$ 12,300	12300	$ 12,300	17300	$ 17,300	17300	$ 17,300
Structural Concrete - Class 4500 (Deck, 6", long span)	yd^3	$ 515.00	80	$ 41,200	0	$ -	0	$ -	90	$ 46,350	90	$ 46,350
Structural Concrete - Class 4500 (Deck, 7", long span)	yd^3	$ 445.00	0	$ -	105	$ 46,725	105	$ 46,725	0	$ -	0	$ -
Structural Concrete - Class 3300 (Substructure)	yd^3	$ 375.00	61	$ 22,875	65	$ 24,375	65	$ 24,375	65	$ 24,375	65	$ 24,375
Structural Concrete - Class 3300 (Superstructure)	yd^3	$ 375.00	67	$ 25,125	75	$ 28,125	75	$ 28,125	75	$ 28,125	75	$ 28,125
Precast Girders - Bulb-T 84	ft	$ 137.16	304	$ 41,662	405	$ 55,550	405	$ 55,550	506	$ 69,437	506	$ 69,437
Bridge Rail - Type "F" Concrete	ft	$ 69.00	203	$ 14,007	284	$ 19,596	284	$ 19,596	284	$ 19,596	284	$ 19,596
Reinforced Concrete Bridge End Panel	yd^2	$ 135.00	0	$ -	211	$ 28,485	211	$ 28,485	211	$ 28,485	211	$ 28,485
Total Substructure Cost				$ 64,135		$ 75,280		$ 75,280		$ 77,865		$ 82,805
Total Superstructure Cost				$ 153,529		$ 224,361		$ 224,361		$ 236,763		$ 236,763
Total Structure Cost				$ 217,664		$ 299,641		$ 299,641		$ 314,628		$ 319,568
Cost per Square Foot				$ 52.86		$ 63.42		$ 63.42		$ 66.59		$ 67.63
Superstructure/Substructure Cost Ratio				2.39		2.98		2.98		3.04		2.86
Maximum Live Load (including Impact) and Corresponding Dead Load Ratios												
Positive Moment (Span 1)				0.08		0.43		0.51		0.74		0.91
Shear (Span 1)				0.09		0.46		0.60		0.79		1.13

ODOT Bridge Cost Allocation Study

OBEC CONSULTING ENGINEERS

Table 2
Bridge Configuration: 150' Simple Span
Estimating Engineer: Kevin M. Groom

			Basic		Type 3		Type 3S2		Permit 2		Permit 4	
			Area = 6134 sq.ft.		Area = 7039 sq.ft.		Area = 7039 sq.ft.		Area = 7039 sq.ft.		Area = 7039 sq.ft.	
Item	Units	Unit Cost	Amount	Total	Amount	Total	Amount	Total	Amount	Total	Amount	Total
Mobilization (10%) (Substructure)	Lump Sum	Lump Sum	All	$ 7,100	All	$ 7,900	All	$ 8,200	All	$ 8,300	All	$ 9,300
Mobilization (10%) (Superstructure)	Lump Sum	Lump Sum	All	$ 15,400	All	$ 32,500	All	$ 32,600	All	$ 35,000	All	$ 37,500
Structural Excavation	yd^3	$ 20.00	70	$ 1,400	75	$ 1,500	75	$ 1,500	75	$ 1,500	75	$ 1,500
Granular Structure Backfill	yd^3	$ 35.00	70	$ 2,450	71	$ 2,485	71	$ 2,485	71	$ 2,485	71	$ 2,485
Furnish Pile Driving Equipment	Lump Sum	$ 12,000.00	All	$ 12,000	All	$ 12,000	All	$ 12,000	All	$ 12,000	All	$ 12,000
Furnish Pile - PP12.75 x 0.375	ft	$ 15.25	640	$ 9,760	880	$ 13,420	960	$ 14,640	1040	$ 15,860	1360	$ 20,740
Drive Steel Pipe Pile	Each	$ 500.00	16	$ 8,000	22	$ 11,000	24	$ 12,000	26	$ 13,000	34	$ 17,000
Substructure Reinforcement	lbs	$ 0.65	12800	$ 8,320	13600	$ 8,840	13600	$ 8,840	13500	$ 8,775	13690	$ 8,899
Superstructure Reinforcement	lbs	$ 0.65	6500	$ 4,225	8130	$ 5,285	8130	$ 5,285	7530	$ 4,895	22400	$ 14,560
Superstructure Reinforcement - Epoxy Coated	lbs	$ 1.00	21000	$ 21,000	26300	$ 26,300	26300	$ 26,300	25400	$ 25,400	13200	$ 13,200
Structural Concrete - Class 4500 (Deck -7.75" Thick)	yd^3	$ 400.00	0	$ -	0	$ -	0	$ -	0	$ -	170	$ 68,000
Structural Concrete - Class 4500 (Deck - 6" Thick)	yd^3	$ 515.00	114	$ 58,710	131	$ 67,465	131	$ 67,465	131	$ 67,465		$ -
Structural Concrete - Class 4000 (Columns)	yd^3	$ 385.00	0	$ -	0	$ -	0	$ -	0	$ -	0	$ -
Structural Concrete - Class 3300 (Substructure)	yd^3	$ 375.00	59	$ 22,125	59	$ 22,125	59	$ 22,125	57	$ 21,375	57	$ 21,375
Structural Concrete - Class 3300 (Superstructure)	yd^3	$ 375.00	61	$ 22,875	66	$ 24,750	66	$ 24,750	68	$ 25,500	68	$ 25,500
Precast Girders - Bulb-T 84	ft	$ 153.50	454	$ 69,689	0	$ -	0	$ -	0	$ -	0	$ -
Precast Girders - Bulb-T 84	ft	$ 150.25	0	$ -	756	$ 113,589	0	$ -	0	$ -	0	$ -
Precast Girders - Bulb-T 84	ft	$ 152.00	0	$ -	0	$ -	756	$ 114,912	0	$ -	0	$ -
Precast Girders - Bulb-T 84	ft	$ 150.25	0	$ -	0	$ -	0	$ -	908	$ 136,427	0	$ -
Precast Girders - Bulb-T 84	ft	$ 152.00	0	$ -	0	$ -	0	$ -	0	$ -	1059	$ 160,968
Bridge Rail - Type "F" Concrete	ft	$ 69.00	303	$ 20,907	384	$ 26,496	384	$ 26,496	384	$ 26,496	384	$ 26,496
Reinforced Concrete Bridge End Panel	yd^2	$ 135.00	0	$ -	211	$ 28,485	211	$ 28,485	211	$ 28,485	211	$ 28,485
Total Substructure Cost				$ 71,155		$ 79,270		$ 81,790		$ 83,295		$ 93,299
Total Superstructure Cost				$ 154,096		$ 324,870		$ 326,293		$ 349,668		$ 374,709
Total Structure Cost				$ 225,251		$ 404,140		$ 408,083		$ 432,963		$ 468,008
Cost per Square Foot				$ 36.72		$ 57.42		$ 57.98		$ 61.51		$ 66.49
Superstructure/Substructure Cost Ratio				2.17		4.10		3.99		4.20		4.02
Maximum Live Load (including Impact) and Corresponding Dead Load Ratios												
Positive Moment (Span 1)				0.04		0.30		0.40		0.51		0.70
Shear (Span 1)				0.04		0.31		0.44		0.54		0.82
Positive Moment (Span 2)				N/A		N/A		N/A		N/A		N/A
Shear (Span 2)				N/A		N/A		N/A		N/A		N/A
Negative Moment (Bent 2)				N/A		N/A		N/A		N/A		N/A

ODOT Bridge Cost Allocation Study

OBEC CONSULTING ENGINEERS

Table 3
Bridge Configuration: 3 Span (60'-90'-60')
Estimating Engineer: Peter R. Pagter

			Basic		Type 3		Type 3S2		Permit 2		Permit 4	
			Area = 8581 sq.ft.		Area = 9847 sq.ft.		Area = 9847 sq.ft.		Area = 9847 sq.ft.		Area = 9847 sq.ft.	
Item	Units	Unit Cost	Amount	Total	Amount	Total	Amount	Total	Amount	Total	Amount	Total
Mobilization (10%) (Substructure)	Lump Sum	Lump Sum	All	$ 21,500	All	$ 31,100	All	$ 37,100	All	$ 44,600	All	$ 65,500
Mobilization (10%) (Superstructure)	Lump Sum	Lump Sum	All	$ 26,200	All	$ 36,100	All	$ 36,300	All	$ 40,100	All	$ 40,800
Structural Excavation	yd^3	$ 20.00	452	$ 9,040	537	$ 10,740	550	$ 11,000	713	$ 14,260	1104	$ 22,080
Granular Structure Backfill	yd^3	$ 35.00	34	$ 1,190	44	$ 1,540	44	$ 1,540	50	$ 1,750	50	$ 1,750
Furnish Pile Driving Equipment	Lump Sum	$ 15,000.00	All	$ 15,000	All	$ 15,000	All	$ 15,000	All	$ 15,000	All	$ 15,000
Furnish Pile - PP12.75 x 0.375	ft	$ 15.25	2000	$ 30,500	2960	$ 45,140	3840	$ 58,560	4000	$ 61,000	5040	$ 76,860
Drive Steel Pipe Pile	Each	$ 500.00	50	$ 25,000	74	$ 37,000	96	$ 48,000	100	$ 50,000	126	$ 63,000
Substructure Reinforcement	lbs	$ 0.65	28260	$ 18,369	49568	$ 32,219	63111	$ 41,022	70695	$ 45,952	102982	$ 66,938
Superstructure Reinforcement	lbs	$ 0.65	29852	$ 19,404	37349	$ 24,277	37753	$ 49,971	39645	$ 25,769	41011	$ 26,657
Superstructure Reinforcement - Epoxy Coated	lbs	$ 1.00	38897	$ 38,897	48137	$ 48,137	49412	$ 26,669	51962	$ 51,962	57644	$ 57,644
Structural Concrete - Class 4500 (6.5 " Deck)	yd^3	$ 480.00	172	$ 82,560		$ -		$ -	198	$ 95,040	198	$ 95,040
Structural Concrete - Class 4500 (7" Deck)	yd^3	$ 445.00		$ -	213	$ 94,785	213	$ 94,785		$ -		$ -
Structural Concrete - Class 4000 (Columns)	yd^3	$ 385.00	81	$ 31,185	156	$ 60,060	198	$ 76,230	254	$ 97,790	363	$ 139,755
Structural Concrete - Class 3300 (Substructure)	yd^3	$ 375.00	169	$ 63,375	208	$ 78,000	219	$ 82,125	309	$ 115,875	544	$ 204,000
Structural Concrete - Class 3300 (Superstructure)	yd^3	$ 375.00	40	$ 15,000	48	$ 18,000	48	$ 18,000	61	$ 22,875	61	$ 22,875
Precast Girders - Bulb-T 72	ft	$ 121.53	420	$ 51,043	630	$ 76,564	630	$ 76,564	840	$ 102,085	840	$ 102,085
Bridge Rail - Type "F" Concrete	ft	$ 69.00	422	$ 29,118	502	$ 34,638	502	$ 34,638	502	$ 34,638	502	$ 34,638
Reinforced Concrete Bridge End Panel	yd^2	$ 135.00		$ -	211	$ 28,485	211	$ 28,485	211	$ 28,485	211	$ 28,485
Total Substructure Cost				$ 215,159		$ 310,799		$ 370,577		$ 446,227		$ 654,883
Total Superstructure Cost				$ 262,221		$ 360,986		$ 362,723		$ 400,954		$ 408,224
Total Structure Cost				$ 477,380		$ 671,785		$ 733,301		$ 847,181		$ 1,063,108
Cost per Square Foot				$ 55.63		$ 68.22		$ 74.47		$ 86.04		$ 107.97
Superstructure/Substructure Cost Ratio				1.22		1.16		0.98		0.90		0.62
Maximum Live Load (including Impact) and Corresponding Dead Load Ratios												
Positive Moment (Span 1)				0.071		0.354		0.333		0.538		0.583
Shear (Span 1)				0.035		0.184		0.194		0.311		0.382
Positive Moment (Span 2)				0.045		0.226		0.226		0.357		0.376
Shear (Span 2)				0.033		0.161		0.200		0.279		0.371
Negative Moment (Bent 2)				0.023		0.114		0.141		0.200		0.314

ODOT Bridge Cost Allocation Study

Table 4
Summary of Results

	100' Simple Span Bridge					150' Simple Span Bridge					60'-90'-60' Continuous Bridge				
	Basic (4 tons)	Type 3 (25 tons)	Type 3S2 (40 tons)	Permit 2 (49 tons)	Permit 4 (114 tons)	Basic (4 tons)	Type 3 (25 tons)	Type 3S2 (40 tons)	Permit 2 (49 tons)	Permit 4 (114 tons)	Basic (4 tons)	Type 3 (25 tons)	Type 3S2 (40 tons)	Permit 2 (49 tons)	Permit 4 (114 tons)
Total Substructure Cost	$ 64,135	$ 75,280	$ 75,280	$ 77,865	$ 82,805	$ 71,155	$ 79,270	$ 81,790	$ 83,295	$ 93,299	$ 215,159	$ 310,799	$ 370,577	$ 446,227	$ 654,883
Total Superstructure Cost	$ 153,529	$ 224,361	$ 224,361	$ 236,763	$ 236,763	$ 154,096	$ 324,870	$ 326,293	$ 349,668	$ 374,709	$ 262,221	$ 360,986	$ 362,723	$ 400,954	$ 408,224
Total Structure Cost	$ 217,664	$ 299,641	$ 299,641	$ 314,628	$ 319,568	$ 225,251	$ 404,140	$ 408,083	$ 432,963	$ 468,008	$ 477,380	$ 671,785	$ 733,301	$ 847,181	$ 1,063,108
Cost Per Square Foot	$ 52.86	$ 63.42	$ 63.42	$ 66.59	$ 67.63	$ 36.72	$ 57.42	$ 57.98	$ 61.51	$ 66.49	$ 55.63	$ 68.22	$ 74.47	$ 86.04	$ 107.97
Superstructure/Substructure Cost Ratio	2.4	3.0	3.0	3.0	2.9	2.2	4.1	4.0	4.2	4.0	1.2	1.2	1.0	0.9	0.6
Live Load/Dead Load Ration - Span 1 Positive Moment	0.08	0.43	0.51	0.74	0.91	0.04	0.30	0.40	0.51	0.70	0.07	0.35	0.33	0.54	0.58
Live Load/Dead Load Ration - Span 1 Shear	0.09	0.46	0.60	0.79	1.13	0.04	0.31	0.44	0.54	0.82	0.04	0.18	0.19	0.31	0.38
Live Load/Dead Load Ration - Span 2 Positive Moment	N/A	N/A	N/A	N/A	N/A	N/A	N/A	N/A	N/A	N/A	0.05	0.23	0.23	0.36	0.38
Live Load/Dead Load Ration - Span 2 Shear	N/A	N/A	N/A	N/A	N/A	N/A	N/A	N/A	N/A	N/A	0.03	0.16	0.20	0.28	0.37
Live Load/Dead Load Ration - Bent 2 Negative Moment	N/A	N/A	N/A	N/A	N/A	N/A	N/A	N/A	N/A	N/A	0.02	0.11	0.14	0.20	0.31

Notes:
1) Unit costs(except girders) are from the ODOT 2001 Cost Data using 1999, 2000 & 2001 years as a basis.
2) Girder costs were obtained by multiplying the estimated costs by Morse Brothers Precast (Harrisburg) by 125% to represent contractor costs.

ODOT Bridge Cost Allocation Study

OBEC CONSULTING ENGINEERS

Comparison Table 5
Bridge Configuration: 100' Simple Span
Estimating Engineer: Pete Slocum

			Basic	Type 3	Type 3S2	Permit 2	Permit 4
			Deck Area=	Deck Area=	Deck Area=	Deck Area=	Deck Area=
			4118 sq.ft.	4725 sq.ft.	4725 sq.ft.	4725 sq.ft.	4725 sq.ft.
Alternate	Description		Total	Total	Total	Total	Total
1	Five (5) BT Precast concrete girder lines	Total Structure Cost	**$ 213,600**	**$ 286,100**	**$ 296,700**	$ 316,100	**$ 318,700**
	Standard Concrete Decks	Cost per Square Foot	**$ 51.9**	**$ 60.5**	**$ 62.8**	$ 66.9	**$ 67.5**
	Standard Bridge Practice	Girder /Grider Lines	BT48 / 5	BT60 / 5	BT72 / 5	BT84 / 5	BT84 / 5
	Girders vary in height with truck loading		7.75 inches	7.75 inches	7.75 inches	7.75 inches	7.75 inches
2	Varying BT Precast concrete girder lines	Total Structure Cost	$ 217,700	$ 299,600	$ 299,600	**$ 314,600**	$ 319,600
	Thin Concrete Decks	Cost per Square Foot	$ 52.9	$ 63.4	$ 63.4	**$ 66.6**	$ 67.6
	Uncommon Bridge Practice	Girder /Grider Lines	BT84 / 3	BT84 / 4	BT84 / 4	BT84 / 5	BT84 / 5
	Girders are all BT84	Deck Thickness	6 inches	7 inches	7 inches	6 inches	6 inches
3	Varying W rolled steel girder lines	Total Structure Cost	$ 217,966	$ 383,558	$ 385,978	$ 430,307	$ 512,312
	GluLam Decks	Cost per Square Foot	$ 52.9	$ 81.2	$ 81.7	$ 91.1	$ 108.4
	Uncommon Bridge Practice for Highway Bridges	Girder /Grider Lines	W44x230 / 3	W44x262 / 5	W44x262 / 5	W44x335 / 5	W44x335 / 7
	Girders are W40 and W44 steel rolled girders	Deck Thickness	3.13 inches	5.13 inches	5.13 inches	5.13 inches	5.13 inches

Note: Items Printed in Bold Red are the lowest cost options

Issue Paper 5:

Pathway to Efficiency

Introduction

In the 2001 Oregon Highway Cost Allocation Study, the concept of efficient fee-based cost allocation was introduced. Instead of estimating costs imposed by forecasting highway-agency expenditures and then allocating those expected expenditures to vehicle weight classes, the efficient fee approach forecasts the revenues that vehicles in each weight class would pay if a set of revenue instruments were to charge each vehicle for the costs it imposes for each mile it travels, given the time and place of travel and the weight and other characteristics of the vehicle. In 2011, an efficient fee study was conducted in parallel with the traditional study and the efficient fee approach was carried through in as much detail as possible, given the availability of relevant data.

The efficient fee approach has several advantages over the traditional approach to highway cost allocation:

- It is not affected by year-to-year variations in the mix of project types undertaken by the agencies
- It is not affected by budget constraints that result in underspending by agencies
- It is not affected by the inherently "lumpy" nature of investment in transportation infrastructure

If an efficient fee approach to highway cost allocation were used, the benefits would likely include the following:

- Each vehicle would pay exactly the costs it imposes, which can be much fairer than equity between weight classes, and which aligns each vehicle operator's behavior with what is best for society. A vehicle would travel when the benefits of the trip are greater than the cost to the traveler and to the rest of society.
- Vehicles would make different numbers of trips and some trips would be at different times or on different routes than under the traditional highway user fees, resulting in a more efficient use of existing infrastructure.
- Where carpooling, transit, biking, or walking are viable alternatives to single-occupant auto travel on congested roads, their share of trips would increase, resulting in a more efficient use of existing infrastructure.
- The collected revenues would, by definition, be just sufficient over time to provide the optimal amount of new capacity and the optimal levels of preservation and maintenance for all facilities.
- In the long run, efficient pricing would lead to more efficient land uses and transportation infrastructure investments through voluntary rearrangements that are beneficial to those making the changes.

To achieve these benefits, efficient fees must actually be levied and their levels must be communicated to travelers at the time travelers make relevant decisions. This issue paper addresses how Oregon might go about converting its Highway Fund revenue instruments to efficient fee instruments.

Efficient Pricing for Roads

Efficient road pricing matches the costs imposed by road users with the amount of user fees they pay. Because different types of costs vary with different factors, an

efficient fee structure consists of several components:

A **congestion fee** component recovers the future costs associated with investing in additional capacity or otherwise relieving congestion. It is based on the costs a vehicle imposes on other vehicles by taking up space on a particular facility at a particular time and is a function of the value of other travelers' time and the amount by which the vehicle slows traffic.

Congestion-related costs can vary greatly over the course of a day and to promote efficient use of the facility, congestion fees must reflect those costs by varying with actual traffic volumes and roadway capacities. In implementation, the prices are recalculated continuously and can change every few minutes if necessary to reflect changing traffic conditions.

Efficient congestion fees reflect a facility's capacity and potential for congestion, the current traffic volume, and the characteristics of the vehicle paying the fee. Longer vehicles and vehicles that require additional space because they accelerate and decelerate more slowly each contribute more to congestion than does a single passenger car. Congestion fees are calculated per passenger car equivalent (PCE) mile.

While efficient congestion fees can produce significant revenue (estimated at over $200 million per year in Oregon), they will be at or near zero at most times on most roads.

Wear-and-tear fee components recover the future maintenance, preservation, and capital replacement costs a vehicle imposes by wearing out the roadway it drives on. The sum of all wear-and-tear fees represents the optimal level of expenditure on maintenance, preservation, and capital replacement and does not depend on actual expenditures in any particular biennium or the cost-effectiveness of actual maintenance and preservation programs.

Wear-and-tear fee components cover roads and bridges and vary with the weight and configuration of the vehicle, the presence of studded tires, and the proportion of degradation on the particular facility that is due to use (as opposed to decay that would occur over time even in the absence of use). The higher the proportion that is due to use, the lower the cost per user-mile.

Oregon's existing weight-mile tax is an example of a wear-and-tear fee that is much closer to efficient than the revenue instruments used for heavy trucks in other states.

An **administrative fee** component recovers the cost of highway agency activities not directly covered by the congestion or wear-and-tear fees, such as planning, administration, finance, information services, and collection costs for user fees.

An **emissions fee** component recovers the costs imposed on others by the emissions produced by the vehicle. In the case of electric vehicles, it may include the emissions produced in generating the electricity used to charge the vehicle. Charging the emissions fee leads to optimal emissions levels regardless of how the revenue is spent. Emissions fee revenues could then be spent on offsetting administrative costs, reducing the administrative fee needed.

Components representing fees for other externalities imposed by vehicles could be included as well. The concept for other fees is the same as with emissions. To be included, the externality must be quantifiable, there must be a defined relationship between the quantity of travel and the quantity of the externality produced, and there must be a defined cost per unit of externality, which may be negative in the case of an external benefit.

The Key Variations in Pricing Approaches

In contrast to current highway financing methods, the theory of efficient pricing leads us to the notion of what is called variable pricing, i.e., pricing that varies with the vehicle class, and specific roadway

conditions–especially the ambient level of congestion. There are many variations on this general theme, however, that have been devised or tried to approximate variable pricing. The key ones, from a practical standpoint, are the following.

Network-wide Tolling. This is the most comprehensive version of tolling and the one that conforms most closely to what theory predicts will be the most efficient–and thus beneficial–tolling strategy. In this form, variable tolls are levied throughout a region's network on both freeways and arterials, and perhaps even local streets and roads. The tolls are variable by roadway segment, where a segment is large enough to make the pricing that is in place understandable by the motorist, but small enough to capture significant differences in, say, level of congestion from one segment to the next. To fully incorporate wear-and- tear cost burdens faithfully in the tolls, the roadway structural class would be identified for each segment. Thus, ideally, tolls would be varied optimally with respect to both congestion and wear-and-tear considerations.

Freeway-Only Tolling is a compromise that focuses on the backbone facilities of the regional network. The technical implementation options are enlarged to include gantry- and-transponder type tolling technologies. In addition, communication to motorists of the toll policy is simplified because of the far smaller number of toll segments. The disadvantage of this approach occurs when the arterial road system is a viable alternative to freeway travel. With freeway-only tolling, diversion of traffic to arterials and local streets and roads will occur.

Area Pricing is a further simplification of a tolling strategy. Area pricing involves levying tolls when one enters certain congestion-vulnerable areas. In practice, this can be implemented in two basic ways:

Cordon Pricing. This involves identifying the boundaries of the tolled zone and levying a toll as vehicles enter and/or leave through the cordon. Variations of this theme include tolling (on a per mile basis) while within the zone, instead of (or in addition to) paying the cordon-piercing toll. The City of London has adopted this method of tolling that congested area.

Parking Charges. Parking charges are de facto area prices, levied only on those who park their vehicles in areas in which parking charges are in force. We are not talking here of the increment of parking charges that compensates the garage owner for actual costs of providing parking, but rather an additional increment that is intended to reflect the congestion burden the vehicle imposes by traveling via the congested paths that lead to the parking zone.

Partial pricing involves tolling only portions of the network on some basis other than the roadway functional class. There are two, primary types of partial pricing in practice.

HOT Lane/Managed Lane Tolling. In this implementation of partial pricing, one or more lanes on a facility are singled out for policy has evolved from the High Occupancy Vehicle (HOV) lane strategy. In this latter strategy, vehicles with high-occupancies were allowed exclusive access to a special lane. The idea behind HOV lane systems was to provide an incentive (in the form of a speed advantage) to the formation of carpools and/or use of bus and vanpool services. A toll applied to all lanes would, of course, also provide such an incentive because motorists would have an incentive to spread the cost of tolls over more occupants. However, access to HOV lanes by HOVs has evolved into something of a political entitlement, and only partial accommodations to tolling have met with acceptance. The HOT lane is an HOV lane that also allows single-occupant vehicles (SOVs) to buy-in to the lane. The ability to levy, and the efficiency of, HOT lane tolls depends in a very complex way on the nature of the corridor (the number of GP vs. HOT lanes, corridor volumes, etc.) and on the HOV-free policy. Some HOT lanes allow all carpools with two or more passengers to use the facility for free, while

others limit HOV-free policy to carpools, vanpools or buses with higher occupancies.

Selected Facility Tolling. Another manifestation of partial pricing involves selecting particular facilities for toll implementation. This is a fairly traditional application of tolling, with bridges or new facilities permitted to levy tolls–primarily as a means of financing the facility. The toll structure tends not to be particularly variable but, rather, with a constant charge for facility use charged to vehicles of various size or axle classes. Even if levied in a variable way, such selected implementations are not expected to yield significant efficiency advantages since their application is to a small fraction of total regional capacity. In addition, the distortion introduced by tolling only a portion of the network may be significant if alternative travel or development paths result from efforts to avoid the toll.

Road Pricing and Investment Policy

Highway authorities may worry that the short run pricing perspective will not address the issue of how to pay for the investment in the roadway itself. In fact, however, if road pricing and investment policies are managed correctly, congestion charges will generate enough revenue to finance capacity throughout time. The logic of this conclusion is important, and worth elaborating upon. The key point is that pricing and investment are both focused on balancing user costs and benefits. The congestion and wear-and-tear increments of short-run prices actually do indicate the value of new or improved capacity:

If the congestion component of short-run prices is high, it is because traffic delays are great and added capacity (which would relieve the congestion) is more likely to be cost-beneficial.

Similarly, if the wear-and-tear costs are high, it is because the roadway is vulnerable to traffic loads and, hence, a project to improve the road's durability would be more likely to be cost-beneficial.

Investment policy itself balances these benefits against the cost of developing the facility. In this manner, congestion tolls and road building costs are related when tolling is properly integrated with decisions to build new roads. Roadways should be improved as long as the cost of serving additional vehicles with the improved road is less than the cost involved in serving them on the existing roads (indicated by the congestion price). Congestion charging dovetails with a benefit-cost based approach to highway investment decision-making.

Tolling existing roads with appropriate congestion tolls makes it easier to identify the road segments that are candidates for improvement: those on which the congestion charges are high, relative to the cost of defraying roadway improvements in that corridor. And congestion prices help moderate congestion in the first instance, and reduce the "false" signals sent by unpriced, congested roads.

At some point, of course, as new capacity is added to an under-built roadway, the spillover costs (and thus the appropriate congestion price) are reduced, so it becomes cheaper to serve travelers without additional improvements. Thus, the theoretical decision rule is that roadways should be improved until the congestion price is equal to the incremental improvement costs. On a roadway that is neither under-built nor overbuilt, the price calculated from the construction and operating cost of new capacity or from the congestion penalty are the same.

Batten and Pozdena demonstrated this empirically for the state of Oregon in 2001 as part of the Oregon Highway Cost Allocation Study (HCAS) process. They emulated efficient tolling statewide, using available data on roadway utilization to project loads and associated tolls for the entire, State system. For the State system as a whole, total revenues collected were not vastly larger under efficient tolling. This suggests that (a) the system, as a whole, is not significantly underbuilt and (b) reform of tolling could occur without

imposing toll costs that are, in the aggregate, very different from the current fuel tax, weight mile and registration fees levied today.

In the absence of road pricing, the highway revenues available to road authorities are generally not sufficient to support the kind of infrastructure investment agendas that are a product of the political process. Travel delay due to congestion then becomes the limiting factor that brings the market into some kind of balance. The consequences of this inefficient equilibrium in terms of lost resources are significant.

A New Model of Toll Financing

In December, 2011 under agreement with the USDOT, the Washington State Department of Transportation began variable priced toll operations on the existing SR520 floating bridge across Lake Washington. This was a first of its kind approach to generating revenues from current highway users to finance a replacement bridge that will add capacity in the corridor. This project represents an important alternative to traditional toll financing of highways. Before tolling began, drivers on the SR520 bridge imposed a variety of costs on the central Puget Sound system of highways and its users. Traffic congestion on the bridge resulted in a significant waste of time resources for users of the bridge facility and users anywhere else in the road system where traffic spillover introduced vehicle delays. But this heavy traffic was also the catalyst for the planning of new capacity in the corridor.

The existing bridge structure is seismically obsolete and in need of replacement, but demand for travel across Lake Washington had grown to the point that additional road capacity was also included in the bridge replacement project being planned. Under traditional toll financing these capacity expansion costs would need to be financed and then paid for exclusively by future toll customers and taxpayers.

By collecting tolls from users of the facility before the bridge is replaced WSDOT has reduced the size of the need for future toll revenues or tax increases after the bridge replacement has been completed. This practice will spread the cost burden to users of the bridge that have burdened capacity over an historical period and allow for lower future tolls than might otherwise be imposed in order to satisfy financing terms of the project.

But if SR520 is a unique case, what can we learn about how highway finance might be restructured? Current highway finance involves low average fees for road use (a tax on fuel consumption) and a very limited use of toll financing. Tolling practices are structured around some historical set of circumstances as follows:

- Low average charges for vehicle use results in congested conditions, but poor revenue availability when and where the revenues are needed most.
- Toll financing is considered in order to add capacity. Governed largely by revenue constraints the capacity considered may or may not adequately addresses the deficiency .
- Tolls are levied on new capacity based on revenue requirements but are often higher than economically justified given the new capacity of the roadway.
- Alternative routes still have low average fees and diversion causes disruption and the revenue yield is compromised.
- The entire enterprise, a high risk endeavor, is jeopardized since the engineering and economics are not well aligned.

These are the challenging circumstances faced by highway departments, the entire tolling industry and highway users. Financially viable toll projects that are politically acceptable are rare. If toll financing of highways is to become a more generally usable approach it would need to be responsive to a dynamic set of performance and investment conditions, something like what is described below:

- Tolls are levied on existing capacity based on the costs the users impose. As vehicle use in a corridor increases so do the toll rates; which manages growth in congestion.
- Revenues accrue over time and capacity is added where and when revenues are sufficient to justify investments.
- Cost-based toll rates can be lower after capacity is added since the tolls are not designed to meet a specific revenue target.
- Alternative routes also have cost-based tolls and so diversion is minimized and revenue yield is stronger and easier to predict.
- The entire enterprise is a sound platform for long-term investment and growth.

It is reasonably clear how this idealized version of toll financing relates to cost responsibility and cost allocation policies, but how do we get there given where things stand now? The move toward a more sustainable tolling framework must turn a traditional approach to road finance on its head. Yet conventional wisdom suggests that such a transformation must be incremental. At the heart of this problem are the related questions of the timing of tolls and investments on the one-hand, and the extent of tolling in a network setting on the other. The most general characteristics of a sustainable highway finance system with tolls at its core might be as follows:

1. Tolls rates should be based on the costs the users impose, even in the short run when the revenues from these tolls may not fully cover the costs for roadway improvements.
2. Opportunities should be sought to increasing the extent of the road network that has some form of tolls or charges so that diversion is minimized and the revenue yield is improved.
3. The toll revenues should be used as a guide that cues investment decisions
4. Toll rate policy should allow for the adjustment of rates (at least to some degree) that respond to new capacity and demand conditions.
5. Toll rates, toll policies, and investment policies should be clear to the customers so they understand the long-term direction and can make sensible short-run choices.

Paths Forward

As was true nearly 100 years ago, the state of Oregon is once again leading the way in creative thinking about highway finance. A tax on fuels was in its early years, and remains today, a faithful substitute for road usage charges. However, a combination of cost inflation, changes in vehicle technology, and the limited political appeal of raising taxes has rendered the future viability of fuel taxes uncertain. Oregon has been systematically examining approaches to replacing the fuel tax for over a decade. These efforts have included considerable work undertaken by a Road User Fee Task Force, culminating in a successful technical and administrative trial of a mileage fee system and subsequent work with industry partners to refine and test potential charging technology and supporting systems. Following on this effort the Oregon legislature in 2013 provided enabling legislation for an opt-in mileage fee system with up to 5,000 initial participants.

Oregon has also supported analysis of "Value Pricing". Proposals were sought and evaluated for a pricing pilot project for potential implementation by 2012. Considerable work was performed to establish a common understanding among all parties as to the purposes, options, and evaluative framework for value pricing implementation. Three potential projects were identified and examined for their likely impacts on congestion, revenue, user benefits, and costs. The three projects were: (1) tolling Cornelius Pass Road between US 30 and US 26, (2) tolling three

on-ramps to OR 217, and (3) parking charges in central Portland. Public input was sought as to how these projects might be perceived and valued by the broader community. The two road pricing projects that were evaluated were found likely to result in considerable traffic diversion off of the tolled facilities such that spillover costs were much larger than the value of time savings on the priced facilities[1]. The revenue yields were modest and the potential costs of mitigating diverted traffic were high. The goal of each of the road pricing projects was to raise revenue for safety improvements and neither took the principles of efficient pricing into account in its design. Public opinion was not in favor of the projects. Even though no project was selected to move forward, the background research and evaluation framework have real value as a basis for future work. Oregon's experience points to the difficulty associated with incremental changes in approach to asset pricing, and suggests the need for a more systematic strategic direction. It also points out the difficulty in achieving efficiency when efficiency is not a design goal.

Few regions outside Oregon have considered efficient tolling policies to the extent that the Puget Sound region in Washington State has done. The region's metropolitan planning organization (MPO) the Puget Sound Regional Council (PSRC) and staff have implemented model instances of most of the interesting alternatives. The PSRC model outputs can be post-processed in their benefit-cost analysis tool, greatly facilitating evaluation of network innovations and policies like tolling.

Based on this analysis, and consistent with theory, tolling an entire region's road network is the obvious candidate for the most socially remunerative form of highway finance. Such an approach could generate about $1.6 billion per year. What is noteworthy about comprehensive congestion pricing is that it not only provides net economic benefits, but also achieves reductions in daily VMT. Reductions in VMT are not a goal of congestion pricing; the goal of congestion pricing is to improve economic efficiency and reduce the burden of transportation on the economy. The fact that an economically-sound policy also reduces VMT (and, thus, has the potential to reduce greenhouse gases), illustrates that much may be achievable with tolling without heavy-handed planning interventions.

The largest benefits are enjoyed by trucks. This follows from the very high values shippers assign to travel time and unreliability, both of which are improved under tolling. This is especially the case with larger scale network tolling, but is also the case with managed lane tolling. This is because the movement of SOVs to the managed lanes improves performance in the general purpose lanes where trucks travel.

While comprehensive tolls produce the greatest economic gains, tolling only limited access highways performs nearly as well, a testament to the importance of highway congestion in the overall context of congestion inefficiency. Tolling only part of a road network is successful when tolls rates balance benefits gained on the tolled roads against the diversion potential to the arterial network. This could be a good, second-best place to start efficient highway finance.

Another class of pricing strategies are mileage-based charges. Although many pricing strategies levy on the basis of vehicle miles, the term mileage charge used here refers to the application of a flat, per mile charge at all times and on all facilities. Mileage charges are usually advocated either as replacements for their near-equivalent, motor-fuel and weight-mile charges, or as arbitrarily-high levies intended to discourage driving, rather than improve efficiency per se. Since mileage charges are (for all practical purposes) the

---

http://www.oregon.gov/ODOT/TD/TP/docs/reports/congestionpricingrpt.pdf

current state of practice and lacking in theoretical foundation as an efficiency remedy. These charges are also expected to be subject to the same set of political constraints faced by existing taxing instruments based on fuel consumption.

In the near term, the tolling of individual facilities will remain a viable approach to financing very select investments in road systems when all the right conditions are met. It is reasonable, however, to ask about how some current pricing practices might move things further along toward an integrated framework for highway management and investment. Partial implementation of road pricing might reasonably take one of three general directions.

Partial Network Tolling. The first approach includes extending strategies that apply tolls to parts of the road network such as linked systems of priced managed lanes or entire corridors or even a complete set of limited access roads. And converting flat rate tolls to variable charges is a potential first order improvement.

- Systems of managed lanes are being planned and implemented in numerous regions including the Los Angeles region, Harris County, Houston Texas and the Washington D.C. beltway region
- The SR-237 and I-680 projects in the Bay Area are more recent projects that are part of an extensive express lane network planned for that region.
- Chile has been on a campaign to modernize their infrastructure through private concession agreements and toll financing.
- In Europe tolling networks have been in place for many years including extensive tolls throughout Scandinavian countries (notably Norway), France (Paris region), and heavy vehicle tolling on major roads in many countries (Switzerland and Germany among others).

Typically tolling on individual roads that make up a network will involve toll tags and roadside tag readers and may include video tolling or enforcement. Cost for the initial toll system may be comparatively low, operating costs very with system design and incremental expansions of the toll system can be fairly high. In the case of heavy vehicle tolling with GPS-based in-vehicle tolling devices the toll network can, however, be expanded without deploying significant new roadside equipment. Toll revenues are generally used for highway capital improvements.

Cordon/Area Pricing. A second approach could expand on charging for access to a specified geography (cordon or area pricing), ideally with some price variation that corresponds with traffic loads.

- In 1975 the Singapore government imposed a charge for drivers to enter downtown Singapore; which improved traffic flow and shifted demand to transit. The system has been extended to select facilities and to full electronic tolling in 1998.
- In 2003 the mayor of London introduced a charge to drive in central London during key business hours using video tolling technology. The results included significant traffic speed improvements and revenues for transit. The charge was briefly extended to west London between 2007-2011.
- After a seven month trial period and a post trial referendum, the Swedish Parliament voted to approve a time of day variable congestion charge with toll control points at all points of access and egress to the city of Stockholm.
- In 2008 New York City was poised to move forward with a congestion charge to enter lower Manhattan but the measure did not get authorized by the New York State Assembly as required.
- In 2008 a peak period congestion charging proposal was considered for downtown San Francisco. An updated

proposal was developed in 2010. Meanwhile in 2011 San Francisco has moved forward with parking pricing that is responsive to demand conditions.

Tolling that manages access to a geographic area either requires a set of cordon points equipped with tag and beacon or video tolling, or an area charging infrastructure (video tolling) deployed throughout the region of control. Upfront costs and operating costs can be quite high and expansion costs may also be comparatively high. In London there were plans to convert the toll system to tag and beacon in order to limit operating costs (at nearly 40% of revenues). Revenues have been used primarily for making investments in transit and alternative modes of transportation.

Mileage Charges. And a third approach might expand on approaches that charge for road use across the entire road system. These systems may begin by only applying a single charge rate (possibly differentiated by vehicle type) by the mile but could reasonably be adapted to vary rates across a full range of cost conditions.

- As referenced above, the state of Oregon has led the way in exploring mileage-fees as an alternative to a tax on fuels.
- The state of Minnesota has also conducted a pilot study to help advance the understanding about how to improve highway finance through direct road use charges. The most recent work involved a technical trial with 500 participants.
- The Washington State Transportation Commission is in the beginning phases of examining mileage-based fees as a finance alternative, as requested by the state legislature.
- A 10-month federally funded multi-state study of mileage fees was conducted by the University of Iowa. Field testing concluded in 2010 and study results were presented to Congress in 2011.
- In Seattle, Washington the Traffic Choices Study implemented a pilot version of the old standard of variable tolls on a full network of roads. This project is described in more detail below.

Mileage charges would require some system of cataloguing vehicle use either through a connection with the vehicle odometer, or through exogenous means of vehicle identification and measurement of use (e.g. GPS tolling). System capital and operating costs of such a system are likely to be high, but incremental expansion of the system to previously untolled facilities can be comparatively low. Revenue would likely be dedicated to maintenance and operation of the road system in the case of a flat charge on vehicle use and could result in sizable revenue for capital expansion in the case where charges reflect congestion prices.

Each of these approaches starts from a unique set of conditions but all could eventually move toward a common result. By incorporating some variation in charges, applying charges to some potential diversion routes, and potentially by charging road users even before improvements are put in place each of these approaches begin to advance the principles manifest in the economic pricing of road use.

Pricing Experiment: Puget Sound Traffic Choices Study

In 2006, the Puget Sound Regional Council, the designated metropolitan planning organization for the Seattle, Washington, area, conducted a pilot project to determine how travelers would change their behavior in response to variable charges for road use. The Traffic Choices pilot project placed GPS-based tolling meters in approximately 500 cars belonging to 275 participating households. It observed detailed driving behavior before, during, and after tolls were charged for the use of major freeways and arterials in the Seattle area. Tolls were charged between mid-2005 and mid-2006. Participants were given account balances

that would leave them with $75 at the end of the study if they did not change their behavior. If they did change their behavior in response to the tolls, they would be as better off as if the tolls were paid from their own money, in addition to the $75.

Figure 3: Traffic Choices Toll Roads Map and Toll Schedule

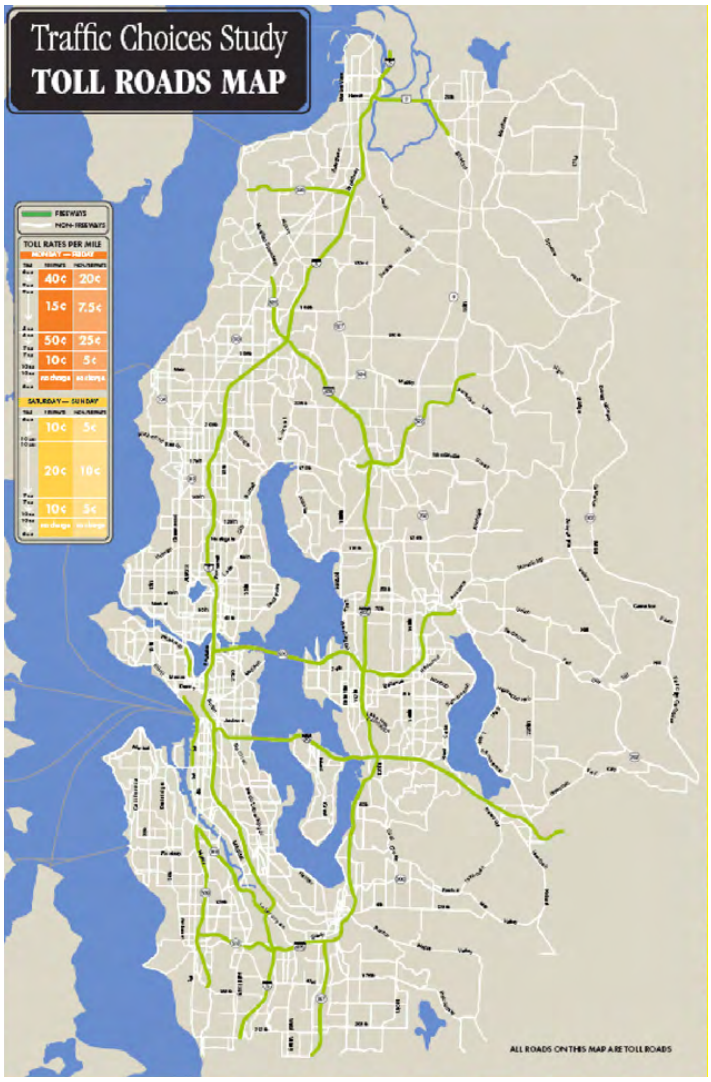

The Traffic Choices Study reached the following primary conclusions:[2]

6. Observed response of drivers to tolls suggests there is a dramatic opportunity to significantly reduce traffic congestion and raise revenues for investment.
   - 6.1. Motorists made small-scale adjustments in travel that, in aggregate, would have a major effect on transportation system performance.
   - 6.2. When approached systematically, variable road tolling, with investments of toll revenues, could make excessive recurring congestion a thing of the past.
   - 6.3. The scale of the revenues confirms the theoretical expectation that "optimal" tolls would support expanding transportation supply when and where it is needed most.
   - 6.4. While most revenues are generated on a small portion of the toll roads, the secondary road network (arterials) should not be ignored, as diversion causes real problems with revenue loss and displaced traffic.
   - 6.5. Users demonstrating a willingness to pay for high-value roadways could expect that improvements would be forthcoming.
   - 6.6. Done right, network tolling could provide broad benefit, including lower vehicle emissions, fewer accidents, travel-time savings, improved roadway-performance reliability, and lower operating costs.
   - 6.7. A conservative analysis of the benefits of network tolling in the Puget Sound region indicates that the present value of net benefits could exceed $28 billion over a 30-year period.
7. Not all aspects of a road network tolling system have been fully demonstrated yet. But the core technology for satellite-based (and whole-road network) toll systems is mature and reliable.
   - 7.1. The tolling system performed as expected and met basic system operating requirements. Further work on system refinement and design of enforcement and billing systems would be required prior to any full system deployment.
   - 7.2. Tolling of dense road networks with facilities that have only minimal access controls requires special attention to issues of GPS accuracy and the overall approach to facility-use determination.
   - 7.3. The approach to processing road-use information (within the on-board device or in the toll system back office) has implications for user privacy, system stability, and data communications costs.
   - 7.4. Enforcement would require other facility-use verification approaches (DSRC, video capture, mobile enforcement) in addition to the GPS-tolling technology.
   - 7.5. Installing in-vehicle tolling devices is a costly logistical challenge, but relying on equipment to come standard with new automobiles won't be practical if it doesn't represent a trusted platform for road tolling.
   - 7.6. The costs for GPS-based tolling systems are dominated by the initial investment in in-vehicle tolling equipment, and the communication of data during operations. Over the last few years, costs have declined dramatically and are expected to continue to come down.
8. A large-scale U.S. deployment of a GPS-based road-tolling program will depend on proven systems, a viable business model, and public acceptance of underlying concepts.

[2] http://www.psrc.org/assets/36/in-summary.pdf

8.1. The public sector business case is based on the sizable social benefits of road tolling. There are ways to generate revenues that are less administratively burdensome, but these displace economic activity and fail to address traffic congestion.

8.2. A transition to road-network tolling would be costly and complex. It would have to be seen as worth the sizable upfront effort.

8.3. Road tolling will be seen as unfair unless people believe that directly charging users 1) addresses inequalities that exist among users of the transportation system, and 2) improves overall economic efficiency, leaving society with greater resources available to address remaining issues of fairness.

8.4. Concerns over user privacy depend on the data that leave the vehicle and what safeguards are in place to limit its availability and use. A road-tolling system can be developed such that user privacy is maintained, but this would come at a price.

8.5. Some experience and familiarity with road tolling makes people more open to the concept, but all programs are unique and will succeed or fail on their own merits. Road users are particularly interested in the question of how revenues will be used.

The Traffic Choices Study provides the best currently available measures of actual consumer behavior change in response to region-wide variable congestion pricing. Across all households and all trip purposes, the following changes were observed:

- 7 percent reduction in all vehicle tours (tours per week)
- 12 percent reduction in vehicle miles traveled (miles per week)
- 8 percent reduction in tour drive time (minutes of driving per week)
- 6 percent reduction in tour segments (segments of tours per week)
- 13 percent reduction in miles driven on tolled roads (tolled miles per week)

The small difference between the reduction in miles driven on tolled roads and the reduction in miles driven on all roads indicates that there was not a lot of diversion from tolled roads to untolled roads.

Technology for Efficient Pricing

Overview

Standard practice in electronic tolling involves the use of relatively simple in-vehicle radio tags, or transponders (e.g., FasTrak or E-Z Pass). The radio tags contain a unique electronic signature that is communicated to roadside equipment as the equipped vehicle drives by. Current systems use various short-range communication technologies and protocols and are typically implemented with proprietary hardware and software elements. Roadside equipment includes the toll tag readers and any equipment necessary for vehicle classification and enforcement, as well as equipment to transfer all necessary transaction information to a central toll operations center. This electronic toll collection approach has been used successfully since it was first introduced in the late 1980s.

Similar technology has been used in the Singapore-area pricing program since 1998. The London Congestion Charging Zone also relies upon roadside equipment for vehicle identification and account processing, although in London video cameras capture the license plates of each vehicle entering the charging zone. Cameras are positioned at all points of access to the zone and also at key locations within the zone.

These approaches require that dedicated roadside tolling equipment be deployed over the full extent of the tolled network and, as a consequence, also require new infrastructure any time the tolled network is expanded or altered. The approach to

network tolling that was investigated as part of the Traffic Choices Study in the Seattle area does not rely on roadside equipment, although enforcement does depend upon strategically located video license plate reader equipment. The in-vehicle tolling devices locate the vehicle on the road network and communicate directly with the central tolling operations system, resulting in significantly less civil infrastructure, and enabling flexible extensions or alterations of the tolling network.

To date, there are few true network tolling programs in operation. Heavy vehicles are tolled on major roads in a few European countries, and the Netherlands is making progress toward a national kilometer charging program to be implemented by 2016. With few operational systems, and none that rely exclusively on GPS-tolling technology, there have been lingering questions about the complexity and cost of such an approach.

The in-vehicle electronic toll collection system elements implemented for the Traffic Choices Study in Seattle met the base requirements for toll system operations. There remain issues that would need to be addressed in an actual implementation, but the Traffic Choices Study is a strong "proof of principle" from a technological standpoint, especially considering that the on-board units (OBUs) used in that study relied on technology that is now more than ten years old.

In-vehicle devices

Transponders, also referred to as electronic tags, are the most common component of electronic toll collection in use around the world. Transponders are often mounted in the windshield of a vehicle, but may be located elsewhere in the vehicle.

Transponders are part of Automatic Vehicle Identification (AVI) technology that enables tolling facilities to accurately identify a specific vehicle at highway speeds. AVI technology also includes the use of a road-mounted or overhead gantry-mounted reader, which communicates with the transponder to identify the vehicle. As a vehicle passes under a toll-collection gantry, its electronic identification encoded into the transponder is sent to the gantry-mounted reader. The driver does not have to stop to pay the toll and no tollbooths are required. The vehicle identifier is sent on to a back-end toll collection system.

On-board GPS units (OBUs) monitor a vehicle's travel and calculate tolls from inside the vehicle, eliminating the need for installing expensive sensors on the roadway. This is particularly advantageous when applying tolls throughout a region, where it is not feasible to have ubiquitous, gantry-mounted sensors. The OBU uses signals from GPS satellites to determine the exact vehicle location and communicates with back-end systems through the cellular telephone network to learn of changes to toll rates and to communicate users' charges and account balances. The vehicles' locations are not transmitted, but may be temporarily stored within the OBU for verification purposes.

One of the advantages of GPS-based tolling is that this technology allows for more accurate time- and location-based tolls. Recent advances in GPS and related technologies allow for far more accurate identification of a vehicle's movement through a tolled area. GPS-based systems do have limitations, however. GPS systems rely on the vehicle's ability to receive satellite signals, which requires an unobstructed view of the sky. Recent advances in GPS-related technology take advantage of information from cell towers to estimate location, speed, and direction in the absence of satellite signals.

Mobile Enforcement Readers (MERs) are installed in enforcement vehicles. An MER unit allows an officer to read the transponders of passing vehicles or to travel adjacent to a vehicle in the HOT lane and read the transponder. The mobile unit provides the officer with the last date and time the transponder was read and whether the account is valid. This technology is used to ensure that users are

not disengaging their vehicle's transponders as they pass under tolling gantries.

On-road devices (e.g., traffic sensors, transponder sensors, traffic control)

Traffic sensor systems may be subsurface, roadside, or overhead. Inductive sensors embedded in the road surface can determine the presence of a vehicle. These sensors may be used to count the number of vehicles crossing a location as well as the number of axles in a vehicle as a vehicle passes over them. A two-loop sensor can also determine the speed of the vehicle passing over it.

Weigh-in-Motion (WIM) systems are capable of estimating the gross vehicle weight of a vehicle as well as the portion of this weight that is carried by each wheel assembly, axle, and axle group. WIM systems provide the date and time of each vehicle passing over it, along with axle weights and spacings, vehicle classification, speed, and transponder ID, if the vehicle has a transponder. WIM systems allow participating trucks with transponders) to bypass weigh stations (e.g., "green light" programs).

License Plate Recognition (LPR) systems use video imaging and optical character recognition to determine a vehicle's license plate number as it passes by the reader. LPR systems can be used to identify violators, apply tolls to vehicles that do not have transponders, and verify that transponders are in the vehicles they are registered to. LPR is the primary technology in use in the toll cordon area of downtown London.

Vehicle Occupancy Monitoring for managed lanes that allow exceptions to tolling for high-occupancy vehicles use infrared or visible light cameras to detect and count the number of occupants in a car. These systems suffer from both accuracy and privacy issues.[3]

Back-end systems and devices

Back-end systems monitor and coordinate the information coming from on-road and on-vehicle systems. They may also archive such information for verification and auditing. In addition, back-end systems perform tolling-related calculations; manage user accounts, identification, tolling accounts, and transponder tag identification; and deduct tolls from users' accounts.

In the U.S., several different companies manage tolling on highways in different states. Most of the northeastern states use E-ZPass, California relies on FasTrak, Minnesota uses MnPass, and Texas has TollTag, EZ TAG, and TxTAG. These last three are interoperable throughout the state. Interoperability among the several different tolling agencies across the country has not yet been achieved. In London and in Germany, a single tolling agency is responsible for operating and managing the tolling systems. In London, the cordon pricing is operated by Transport for London. In Germany, the Toll Collect system is ubiquitous in tolling heavy trucks for use of federal highways.

Data collection, billing, data retention, and privacy

Each of the technologies used for electronic tolling will record data on users' personal travel behavior (if they use a toll road or enter a cordoned area), but the level of privacy concerns vary for each of the technologies. For example, while there is a general concern about theft of the in-vehicle devices or hacking of a user's account, there are fewer concerns with the theft of transponders than with in-vehicle GPS devices, because transponders carry no record of where they've been. On the other hand, transponder-based systems need to store information about where the transponder has been read in a back-end data system, whereas GPS-based on-board units can keep all location data inside the

[3] http://ops.fhwa.dot.gov/publications/12hovsysconf/breakout15.htm

unit, which remains in the user's possession unless it needs to be audited.

Many consumers misunderstand how GPS works and believe that in GPS-based systems, satellites can "see" them and track them as they move around. In reality, the GPS satellites only transmit their identifier and the time. GPS receivers use differences in time to calculate their distance to each satellite they can "see," and from those, calculate their position on the surface of the earth. Acceptance of GPS-based technology will require educating consumers.

People also have privacy concerns related to the use of cameras for tolling. Many people are concerned with the use or sale of personal travel data to entities not directly related to tolling, such as law enforcement agencies, private investigators, or firms seeking to use the data for marketing purposes.

In Germany, the Federal Office for Goods Transport (BAG) is responsible for the truck toll system and Toll Collect is a subcontractor. BAG defines the requirements to be implemented and oversees the data protection policy. Permission to process data for the toll system is provided by the Truck Toll Regulation and the Federal Commissioner for Data Protection and Freedom of Information. Data is processed by the operator, "strictly in accordance with data protection guidelines and exclusively for the statutorily prescribed purpose of toll collection." Personal data are transmitted only to the extent necessary to fulfill toll collection and contract obligations and the transmission of data is performed through authenticated encrypted messages. In addition, the bill itself only contains information about the route the truck traveled, at what time, and the toll the user is required to pay. Law enforcement authorities cannot use this information to determine average speed as the on-board unit does not store any information on the speed of the truck. Billing data are not sold to any third parties. The German system relies on photographs of vehicles' license plates for enforcement; drivers cannot be recognized in the photos. Photos are deleted "within a fraction of a second" for vehicles that are determined to be exempt from the toll.

In the U.S., E-Z Pass customers are assured that all information related to their account, including their financial information and vehicle movement records, will only be used for billing, deducting toll charges, enforcing toll collection laws, or other legal uses as ordered by courts. The latter allowed use has caused some concern, however, as E-Z Pass records were released under court order and used in a divorce trial as evidence of infidelity.[4]

There are many ways to protect the privacy of individuals and to inform them of what data are collected and how the tolling agency and its contractors will use them. With proper planning, education, and technology, the protection of privacy need not be a major roadblock to the successful implementation of congestion pricing systems.

Andrew J. Blumberg of Stanford University, along with several coauthors, has published extensively on location privacy in general and location privacy issues related to tolling in particular. Blumberg argues that systems that create and store digital records of people's movements through public space are an inextricable part of the fabric of everyday life and there will be many more such systems in the near future. He cites current examples such as:

- Monthly transit swipe-cards
- Electronic tolling devices (e.g., FasTrak, E-Z Pass)
- Cell phones
- Services telling you when your friends are nearby
- Searches for services and businesses near your current location

[4] http://www.msnbc.msn.com/id/20216302/

- Free Wi-Fi with ads for businesses near the network access point you're using
- Electronic swipe cards for doors
- Credit and debit card transactions at stores, ATMs, vending machines, etc.

He argues that these systems are innovative and promise benefits ranging from increased convenience to transformative new kinds of social interaction. Unfortunately, these systems pose a dramatic threat to location privacy, the ability of an individual to move in public space with the expectation that under normal circumstances there is no record of their having been there. Society is not likely to stop the cascade of new location-based digital services, nor does it appear that it would want to, as the benefits of such services to users are expected to be substantial.[5]

Enforcement

There are three common types of tolling-related violations: 1) failure to meet required vehicle-occupancy levels, 2) failure to pay a toll, and 3) crossing into or out of priced lanes where not allowed. The enforcement of vehicle-occupancy restrictions, such as in high-occupancy vehicle (HOV) lanes, can be difficult. Manual enforcement (wherein patrol officers are required to observe the violation, pursue the violating vehicle, pull the vehicle over to the roadside, and manually issue a ticket) can be labor-intensive, costly, and dangerous.

Tolled facilities, including tolled lanes and high-occupancy toll (HOT) lanes, have different options for enforcing toll collection. Toll lanes often enforce toll payment by detecting a transponder in the user's vehicle. Violators may lack a working transponder, have an invalid account, or have inadequate funds for the toll. Violations are captured by a video or photograph of the violator's license plate.

With HOT lanes, however, enforcement is complicated. If a patrol officer sees a vehicle that does not meet the occupancy requirements, the officer may not know if the user has paid for the right to be in the lane. Similarly, a vehicle that meets the minimum occupancy requirements to use the lane may not have a transponder, which means that the detector systems in place cannot tell if such a vehicle has a legal right to be in the HOT lane.

Rigorous enforcement is essential for managed lanes to be successful at congestion mitigation and revenue collection. The following cases illustrate the methods of enforcement used by several managed-lane facilities in the U.S., as well as two European facilities that employ different tolling schemes.

San Diego, I-15, & Orange County, SR-91, California, U.S.

When the HOT lane operations on I-15 in San Diego first began, the system violation rate dropped from 15 percent to approximately 5 percent.[6] This was largely due to the presence of California Highway Patrol (CHP) as part of the demonstration of the HOT lanes project. Most regularly tolled facilities (versus HOT lanes) that rely on transponders for enforcement have a violation rate of less than 5 percent. In 2006, violation rates estimates were between 5 and 20 percent.

Enforcement along both I-15 and SR-91 involves the same process, which relies first on electronic assessment to screen the vehicles, then on manual enforcement. When a vehicle with a transponder passes a reader at a tolling zone, the driver's information is transmitted to a central processing center. If the reader does not detect a valid account, the reader sends a signal to an enforcement officer who is

[5] http://math.stanford.edu/~blumberg/traffic/congestion.pdf

[6] This estimate is cited in several studies, including: https://www.transportationresearch.gov/dot/fhwa/hcx/Lists/aReferences/Attachments/243/CA%20SANDAG%20Violation%20Enforcement%20on%20I-15%20HOT%20lanes.pdf

stationed at the tolling zone. The CHP officer then pulls the vehicle over, issues a citation, and testifies in court as to the details of the violation. Manual enforcement along SR-91 is slightly more complicated than for I-15, as SR-91 has a vehicle-occupancy requirement of three or more, whereas the requirement for I-15 is two or more. Vehicles that have three persons in them may be pulled over for enforcement because the patrol officer did not correctly observe the number of occupants. Depending on the court caseload, the number of violation cases heard regularly may vary. Cases are dismissed when an officer does not appear in court, usually after one or more continuances have been issued. The San Diego Association of Governments (SANDAG) is considering the use of an Administrative Law Judge to adjudicate cases.

In addition to manual enforcement, SR-91 uses automated enforcement technology.[7] When a reader cannot detect a tag or detects an invalid tag read, an enforcement camera takes a picture of the vehicle's license plate. The plate number is then compared to a database to determine if there was a violation. When a violation is detected by the automated enforcement technology, the tollway authority contacts toll violator by mail, giving them the opportunity to pay the fine or contest the fine. Drivers who do not respond to the initial letter are issued a second notice. Drivers who fail to pay or file the required paperwork to request an appeal are referred to a collection agency. When an appeal is requested, an administrative hearing is conducted in which the driver meets with a third-party arbitrator. The arbitrator then decides whether the fine should be upheld. Drivers may appeal an unfavorable administrative decision by filing in superior court and appearing before a judge to plead their case.

Colorado I-25, U.S.

The Colorado I-25 Express Lane facility is an HOV2+ facility that allows single-occupant vehicles to pay a toll to use the express lanes when there is excess capacity. The operators of the I-25 Express Lanes contract with Colorado State Patrol to monitor HOV violations, and license plate photo-capture technology is employed for transponder violations on the I-25 facility.[8] Electronically captured violators are mailed notices that they were in violation of the toll payment, that their plate was captured, and that they must pay the fine (which is usually 25 percent more than the toll). The driver may pay the fine by mail or go to court to appeal the penalty. Colorado is pursuing the authority to use an Administrative Law Judge to adjudicate all enforcement cases.

Houston HOT Lanes, U.S.

The I-10 (Katy Freeway) and U.S. 290 (Northwest Freeway) managed lanes in Houston, Texas, are managed by the Harris County Toll Road Authority (HCTRA). In the Houston system, toll payment and payment enforcement can be conducted at the same gantries. Gantry lights indicate when a valid transponder account has been billed for the toll. However, in the past, the transponders have had operational problems and police officers used other means to enforce occupancy requirements. The Katy and Northwest Freeways require users to purchase and mount EZ TAGs in their vehicles. Officers that are stationed at the gantries look for the EZ TAGs to make enforcement determinations.

Users of the managed lanes that fail to pay the toll are permitted two free passes.

---

[7] A description of the automatic enforcement of the facility can be found here: http://ops.fhwa.dot.gov/freewaymgmt/publications/managed_lanes/crosscuttingstudy/chapter4.htm

[8] Details of the I-25 enforcement process are provided here: http://www.coloradodot.info/travel/tolling/i-25-hov-express-lanes

The third violation, however, triggers a violation invoice which the HCTRA mails to the violator. Violations that result in a violation invoice are attributable to any of the following scenarios: 1) a vehicle traveled the tollway without a registered EZ TAG account or paying the toll at a toll booth, 2) the EZ account balance is insufficient, or 3) the EZ TAG's vehicle information in the account does not match the vehicle that passed the toll.[9]

In addition, HCTRA has a telephone number, referred to as the "Hero Line," that anyone may use to report a toll violation. (This is reportedly a "great way to vent," but there is no follow-up to the reporting.) As with other manual enforcement methods, officers may mistake the number of occupants, failing to identify children or sleeping passengers that were not easily observable from outside the vehicle. When a violation citation is given by an officer that has pulled over a violator, the violator is required to pay the fine or appear in court. The patrol officer is also required to testify in court or the case will be dismissed. This complicates the enforcement process.

Minnesota MnPASS System, U.S.

Near Minneapolis, there are two managed-lane facilities that rely on a MnPASS system for automatic toll collection and enforcement. These are the I-35W and I-394 Express Lanes. In the MnPASS system, users of the managed lanes are required to use an MnPASS transponder. Gantries are used to read the transponders and there are no toll booths. All enforcement actions are handled through the court system. Violators are fined a minimum of $142.[10]

Enforcement is handled by both local and state officers. An enforcement center is used to dispatch officers, and dedicated enforcement personnel are equipped with mobile enforcement equipment. Enforcement transponders allow enforcement officers to follow a vehicle through a toll zone and determine if the vehicle has an MnPASS account. When the vehicle passes through the toll zone, the system will cause the enforcement transponder in the trailing officer's vehicle to beep. If there is no beep, the vehicle is in violation. In addition, officers use mobile enforcement transponders to determine when the user last paid a toll. If the user disconnected the transponder when passing a gantry to avoid paying the toll, but re-enabled it afterwards, the mobile enforcement transponder allows the officer to determine whether the operator of the vehicle is in violation.

Cordon Enforcement, London, England

In London, and other areas that have tolled cordon regions, vehicles are tolled for their use of a network of roadways within a region that has previously (prior to the implementation of the tolls) been highly trafficked. In central London, near the Central Business District, drivers are tolled £10 for access to the Congestion Charge Zone (CCZ) between 7:00AM and 6:00PM, Monday through Friday. Exempt vehicles include emergency service vehicles, motorcycles, mopeds, and certain taxis. Residents in the area and operators of electric and plug-in hybrid vehicles, motor tricycles, and certain other vehicles are offered a discounted toll rate.

Toll payments can be made at selected retail outlets, payment machines scattered throughout the cordoned area, via the Internet, or via cell phone messaging. The system relies on automatic number plate recognition (ANPR) technology to enforce vehicle restrictions and tolling. ANPR technology identifies vehicles by means of a network of video cameras recording the license plate numbers of vehicles in the cordoned area and matching these with a list of those that have paid the toll. If the photographed license matches one on the list, the photograph is deleted from the

[9] https://www.hctra.org/about_faq/violations

[10] https://support.mnpass.net/kayako/index.php?_m=knowledgebase&_a=view&parentcategoryid=3

system. If a vehicle is found to be in violation, the captured image is saved and sent for law enforcement. Fees for violation range between £60 and £187, depending on the length of time between the citation and the payment of the citation.

Vehicle Position System Enforcement, Germany

While the amount of a toll on a Vehicle Positioning System-based facility is determined by the amount that the vehicle travels, measured by a GPS or other navigation system, enforcement of the facility is dependent on gantries to detect toll violators and patrol officers to enforce tollway compliance. In Germany, Toll Collect GmbH, headquartered in Berlin, collects distance-based tolls for heavy commercial vehicles on federal motorways. Users of the roadway may log on to the system via a toll station terminal, the internet, or an on-board unit. The system incorporates global system for mobile communications (GSM) and GPS technology to detect the vehicle movement and relay the data via mobile communications to the Toll Collect computing center.

The German Federal Office for Goods Transport (BAG) is responsible for enforcing the toll regulations and collecting fines from violators. Enforcement relies on automatic enforcement via control gantries, as well as stationary and mobile enforcement by BAG officers.[11]

For automatic enforcement, infrared sensors installed on approximately 300 fixed control gantries detect approaching trucks. Vehicle data are recorded and compared to data stored in the control center. For stationary enforcement, BAG officers that are stationed near the gantries are informed of a suspected violation via transmission from the gantries within seconds after the vehicle passes under the gantry. In addition, for mobile enforcement, approximately 300 BAG vehicles patrol the toll road 24 hours a day. These patrol teams check to see if the truck is using the automatic system and whether the correct number of axles has been entered for the truck's registration. If the truck does not appear to be using the automatic system with an onboard unit, the patrol team checks the license plate number with the manual log-on data in the central database. Stopping the vehicle for on-site confirmation is a final effort for suspected vehicles.

Other Challenges to Implementation

Numerous arguments for not implementing variable road tolling have been raised. The Traffic Choices Study report lists the following:

- It is a significant departure from current practice
- It would create new winners and losers
- It could be hard on those with few alternatives to driving alone on busy roads
- It could increase the fiscal burden on consumers of transportation services unless toll revenues in part offset existing taxes and fees
- It would make everyone worse off if the toll revenues are not used wisely (highlighting current feelings of distrust about government priorities)
- It may compromise user privacy, depending on the technical approach
- It would be complex, intrusive, and costly to implement

The last item, cost and difficulty of implementation, poses the biggest challenge to implementation. The Traffic Choices Study estimated that to implement a region-wide congestion pricing scheme similar to the one that was piloted in Washington State would involve about $750 million in initial capital costs and another $290 million per year in operating costs. These costs include OBUs and

[11] http://www.toll-collect.de/en/all-about-the-toll/toll-enforcement.html

installation, equipment maintenance and replacement, back-office systems and staff, training, enforcement-support equipment, and enforcement staff. A statewide implementation in Oregon likely would cost more[12].

These costs seem daunting until compared to the benefits that would ensue. The benefit-cost analysis for the Traffic Choices study found the present value of costs (initial and ongoing) to be $5.5 billion and the present value of benefits to be $33.6 billion. The Puget Sound region would be better off by more than $28 billion if it chose to invest in congestion pricing. The largest source of benefits was the value of time saved. Improvements in travel-time reliability were also significant: with a present value of $4.5 billion, they offset 82 percent of costs by themselves.

Oregon has fewer miles of severely congested roads than does the Puget Sound region, and congested roads in Oregon typically are congested for fewer hours per day, so it is likely that the benefits of congestion pricing in Oregon would be lower than those estimated for the Traffic Choices Study, at least in the early years. But given the enormous estimated net benefits, it is almost certain that net benefits in Oregon would be positive.

Road Pricing and Land Use

Had efficient pricing been in place instead of the current system of finance, there seems no doubt that it would have favored a relatively more compact pattern of development than has transpired. The reasons are severalfold:

- Location theory demonstrates that higher travel costs per mile favor less dispersal of activity. (In location theory parlance, it "steepens the bid-rent gradient" because proximity to the center of the region is sought as a means of avoiding transportation costs.) To the extent that residential location is mediated by peak period travel costs, therefore, residential location would have been less dispersed.
- As argued earlier, the current method of finance creates artificial signals to increase capacity, and no signals to use that capacity efficiently. This likely has contributed to the historical extensiveness of regional highway systems since capacity is more cheaply added in those locations.
- Efficient pricing provides a strong incentive to use roadway capacity more efficiently, which would have provided stronger demand for high occupancy vehicles (HOVs) like buses, vanpools and carpools. This would have reinforced the tendency toward central location.

Now that the pattern of settlement in many communities has been affected by current, inefficient pricing and investment policies, it is not clear that implementing tolling will "undo" that pattern of settlement. Rather, it is more likely that the satellite clusters of activity that have formed in the last century will become centers in their own right, and application of ubiquitous tolling will reinforce some of them.

Current practices in managing growth and development operate by imposing constraints on the use of land use, subsidization of non-highway modes of transport, and other non-pricing-related methods.

These methods, however, are often very costly and only marginally effective. Just as the non-economic tradition of highway finance created wasteful development and highway use, the non-economic posture of land use controls often makes wasteful use of land and other resources. Properly implemented, efficient pricing guides not

[12] The cost estimates for the Traffic Choices study included very conservative assumptions in order to avoid underestimation of cost risk. In reality, costs should be considerably lower. For example, tolling hardware was assumed to enjoyed no technology gains or economies of scale, and data communication costs were estimated at retail prices.

only efficient highway utilization and development, but also removes the necessity for these policies directed at counteracting the effects of inefficient highway finance. With broad and effective implementation of road pricing, land use controls can be relaxed and transit subsidies can be reduced. Short run marginal cost pricing of highways and coordinated cost-beneficial investment will send the signals needed to guide land use and travel in the most resource-sparing direction.

Fairness

It is reasonable to wonder about the fairness implications of a system of tolled roadways, including concerns about whether only the wealthy would use these roads. Evidence from pricing experiments throughout the world and the U.S. suggest that many types of users take advantage of toll managed and financed infrastructure. In fact, efficient pricing can be more equitable than the current system of finance in several ways:

- The congestion element of tolls is zero if the time of travel is during an uncongested period. To the extent that less affluent households tend to be reverse commuters, they would face lower user charges under efficient tolling. Under the current system, travelers in the uncongested period pay regardless of conditions.
- Under the existing system, those who travel in uncongested time periods and/or using light vehicles (imposing no burden on existing capacity) have their fees spent on capacity improvements that typically benefit peak users and heavy trucks. Under efficient pricing, those who compel the need for new capacity pay for it.
- To the extent that efficient pricing improves traffic flow and speeds, users of bus transit– who are more typically of lower income–enjoy reduced travel times.
- Unlike other remedies for mobility problems, tolling efficiently generates revenues that can be used to improve the lot of those disadvantaged by the tolling.

Implementing road pricing means travelers using congested facilities during the peak period will face greater out-of-pocket costs than they currently pay through the gasoline tax alone. Off peak and night charges, on the other hand likely could be less than they are without congestion pricing if pricing were implemented broadly enough to permit average gasoline taxes to be reduced or eliminated. But absent comprehensive application, road pricing will likely cause some diversion of trips to different routes, at different times, by different modes, and may induce some travelers not to travel at all.

It is quite clear that some users of the transportation system could become worse off under road pricing. And it is important to remember that, for the most part, individuals made worse off are done so precisely because under current financing they are unequally benefiting. Marginal cost pricing would highlight the question of whether "subsidies" of certain travel behavior actually do serve public interests. Where these "subsidies" do serve public interest, those who lose out under a pricing program could be made whole through the direct transfer, or rebate, of some pricing revenues to those individuals. The use of pricing revenues, whether through public investment in infrastructure and services or through tax or fee rebates, can be structured in such a manner as to benefit segments of society that are made worse-off under economically efficient pricing.

In addition to direct investment in transportation infrastructure and services another possible use of revenues is in offsetting less efficient taxes and fees. There are cases when the existing volume based fuel tax overcharges users for access to infrastructure, when the fuel tax revenue from travel on the facility more than covers all associated facility and

external costs. Other less efficient "transportation" taxes and fees include taxes on fuels, vehicle registration fees, vehicle excise (property) taxes, and taxes on the sale of goods and services. Revenue offsetting can improve the general acceptance of road pricing since it directly addresses the public feelings of double taxation. But if revenue offsets are to be part of road pricing it is important to explicitly incorporate these financial reforms up front as there is very little faith that government will reduce taxes later on once new revenues begin to become available.

Recommended Next Steps

The primary purpose of this issue paper is to describe a pathway that policymakers in Oregon might follow to achieve efficient fee-based transportation funding in Oregon. To that end, we offer outlines of three plans, each essential to successful implementation.

Technical Research Plan

The technical research plan would begin immediately. Technical research specific to Oregon will:

1. Determine whether efficient fee pricing is cost-effective and estimate the benefits and costs of road pricing in Oregon; and
2. Guide the technical and organizational plans and characterize options for technology, policy, and finance.

The technical research plan will include assessing the need for data to characterize traffic volumes and speeds, roadway capacities and characteristics, transit supply, travel demand, commodity flows, freight movements, carpooling, and walking and biking. Modeling capabilities necessary to process and make use of the data will also be characterized.

Once data needs are assessed, a plan for collecting the necessary data will be developed, including recommendations for instrumentation (e.g., permanent loop detectors, vehicle classification equipment, portable traffic counters) and deployment. Data will include maintenance and preservation costs and their relationship to use by vehicles of various weights. A parallel effort will update and improve analytic models to make use of the data.

The technical research plan will also describe procedures for determining efficient congestion fees and efficient wear-and-tear fees, as well as procedures for simplifying efficient fees and determining efficient fees under partial implementation (e.g., freeway-only congestion charges) that may significantly reduce implementation costs without significantly reducing benefits.

Finally, the technical research plan will describe procedures for estimating, at the sketch-planning level, revenues and benefits under current and expected future conditions with fully efficient fees and with partial implementation.

In addition to describing the necessary technical research, the technical research plan will address the roles and responsibilities of various federal, state, and local agencies, relevant educational and research institutions, and contractors in carrying out the data collection and analysis.

Technical Implementation Plan

The technical implementation plan is a detailed, long-range plan for implementing efficient pricing. Goals of the plan include:

- Cost-effective investment in facilities and technology
- Flexible design to accommodate future technologies
- An incremental approach that does not impede progress toward full efficiency

The technical implementation plan will:

- Describe the advantages, disadvantages, and availability of technology options, and recommend appropriate technologies for each stage of the proposed implementation

- Describe the expected initial and ongoing costs for construction, equipment, data transmission, maintenance, transaction processing, and enforcement under the recommended plan
- Discuss financing options for the introduction of pricing
- Discuss the relationship between pricing and investment and the uses of revenue, including integrating pricing and asset-management policies
- Describe cost and schedule risks associated with the recommended plan

Organizational Implementation Plan

The successful implementation of efficient fee pricing will depend as much on political and organizational factors and communication as on technical specifications and funding. An organizational implementation plan will recognize the importance of public and institutional support and the key roles agency staff will need to play beyond building, running, and enforcing the new system.

An organizational implementation plan will include:

- Identification of affected state and local government agencies and their roles in planning and implementation
- Identification of federal agencies with funding, policy, or regulatory authority and their potential contributions
- Description of costs and benefits that would accrue to travelers and to the trucking industry and businesses that ship by truck
- Description of how travelers from outside Oregon and Oregonians without bank accounts would participate
- Identification and description of appropriate outreach efforts for stakeholders, including the general public, including how to convince people that user privacy would be safeguarded
- Description of the role in least-cost planning that information gathered as a part of implementing efficient fees could play and how that information could improve state and local asset management programs and guide capital investment, project selection, and maintenance decisions

Decision Points

- (Any time) Decide to fund the development and implementation of the technical research plan.
- (Upon completion of the technical research plan) Evaluate the results of the technical research and decide to fund the development of the technical and organizational implementation plans.
- (Upon completion of the technical and organizational implementation plans) Confirm the technical and political feasibility of implementation and decide to implement.
- (Periodically during implementation) Evaluate progress and refine plans as needed.

Oregon Highway Cost Allocation Study Review Team
Meeting Minutes of June 14, 2012
2:00 p.m. to 5:00 p.m

222 SW Columbia St., Suite 1600,
Portland, Oregon 97201

Attendees: Study Review Team Members

Bob Russell, Oregon Trucking Association
Mark McMullen, Office of Economic Analysis, (Chair for SRT)*
Don Negri, Willamette University
Victor Doidier, ODOT
Tim Morgan, AAA Oregon
Craig Campbell, Victory Group
Jerri Bohard, ODOT
Doug Parrow, Oregon Citizen
Carl Batten, ECONorthwest
Tom Potiowsky, NERC
Mazen Malik, Legislative Revenue Office

On the phone: Chris Higgins (Oregon State University), Lani Pennington and John Merriss (ODOT), Miguel Figliozzi (Portland State University)

Absent: Jon Oshel, Association of Oregon Counties

I. Introduction: Mr. Potiowsky opened the meeting at 2:00 p.m. and welcomed the Study Review Team (SRT) members. Participants introduced themselves.

Mr. Potiowsky reviewed the purpose of today's meeting, which will discuss the work plan for the 2013 HCAS and future meetings for the rest of the year, finishing up in January 2013.

II. Work Plan for 2013 OHCAS

a. Schedule of Meeting and Topics

- The schedule is on the first page of the 2013 Oregon HCAS Work Plan
- Mr. Batten then discussed the schedule for 2013 HCAS and described what to expect for the next meetings.
- Mr. Batten stated that the schedule is going to be compressed compared to prior studies.

  "For the July meeting, we will have a briefing on bridge cost allocation by the engineers from HDR and have a discussion of the issues that 2013 Legislature will face (maybe we can talk Victor into coming back to help us with that discussion as well as Mazen). Knowing what initiatives might be brought forward and issues facing legislators related to the HCAS, we may make

modifications to issue papers and modeling based on what we expect legislators to "ask the model to do" during the legislative session. Next month we can also discuss methods and allocators to use in the study."

"By August we hope to have two issues papers ready to talk about. In September we expect to have two more draft issues papers and will present the detailed Flowchart of the Model. In October we will devote the meeting to the results of the draft Bridge Cost Allocation Study. … In November, we will discuss preliminary model results and in December we will have final results and a draft report. Then, sometime in early January, we will be submitting the main volume of the final report to the legislature. Later in January or early February we will deliver the model, reference manual, user guide and appendices. … and There probably won't be another meeting unless desired by the SRT. Sometime in February, we will be doing presentations to the legislature." [Quotes and paraphrase]

- Mr. Batten asked the SRT members if there was anyone else they should invite for the July meeting that might have good insight into upcoming legislative issues. He suggested Bob Russell and Craig Campbell might have some good ideas. SRT members mentioned Jim Whittey and the VMT-fee study that might have an impact on the HCAS.
- Mr. Potiowsky informed Mr. McMullen that a memo has to go from (him), Mr. McMullen, to the Transportation Committees and the Revenue Committees. The memo is a short notification, stating the Highway Cost Allocation Study has been completed, sent by January 31st, 2013.

b. Discussion of Issue Papers

- Mr. Batten moved to a discussion on issue papers, which is on the second page of the work plan. He states that there are five potential issues papers or topics that are listed in the scope section of the contract.
- Mr. Russell mentioned the desire to look at efficient fee (fourth bullet point), first. He also had a few questions about the budget, previous bridge studies, and allocating resources.
- A lengthy discussion ensued on the efficient fee issue paper, bridge study updates, and budget adequacy for doing extended work on efficient fees and bridge cost. Highlights from that discussion:
    - Mr. Russell wondered about the bridge cost study and asked what will be new. He indicated there was a big bridge study in 2002. The response from Mr. Batten was that the 2002 study looked at three prototypical bridges at that time; those bridges may not be representative of the bridges that are being built now and that there is more recent data on cost and design. Ms. Bohard contacted the bridge section to make sure an update was needed. The bridge section would really like an update of the 2002 study. She also stated that OSU research and the OTU process are key elements for this update. Mr. Merriss agreed on updating the 2002 bridge study and stated that they have been relying on a 2002 study that is badly outdated at this point. Mr. Batten affirmed that they built a budget to cover the cost of the bridge study. As Mr.

Merriss stated, Mr. Batten already hired a bridge expert by sub-contract for the update of the bridge study.

- Discussion around issue paper bullet number four which deals with the 2011 Oregon Efficient Fee Study. Mr. McMullen asked Mr. Russell, how he would propose expanding bullet point four from what is already mentioned or was he suggesting making sure bullet point four to be an issue paper. Mr. Russell responded that this topic would require more discussion and he would like to know if resources needed to be allocated accomplish this. Mr. Russell would like the efficient fee discussion to explore how to implement this approach. What are the obstacles in terms of technical, economic, and non-economic (e.g., political) issues to implement the efficient fee approach? Mr. Batten reiterated that resources were added to cover the bridge cost study so that is not in question. Discussion continued on whether remaining resources could be reallocated or additional resources to expand the efficient fee discussion. Discussion also pointed out that the VMT pilot study is a test of technical implementation and not how to implement the efficient fee approach. Mr. Batten agreed to get back to Mr. McMullen with a more-detailed description of an expanded efficient fee paper and a budget amount to cover the expansion.

- Mr. Campbell asked if there have been any further studies about differential impact on weight below 10,000. Mr. Campbell also states that there have been many questions on electric vehicles and their assumptions that the weight of difference should have a difference in their charge. Mr. Batten talked about having a conversation with Roger Mingo indicating that the gradations get so fine at that point that it does not make a difference. Mr. Batten said that bullet point number 3 would address these issues, and they would like to "focus on electric vehicles and address initiatives that are already underway to find alternative revenue instruments that are appropriate to electric vehicles." *(Paragraph 2, page 3, 2013 Oregon HCAS Work Plan)* Short discussion followed on rate setting among different classes of light and electric vehicles.
- Mr. Batten would like to substitute the (fifth bullet point) issue paper as recommend on the third page of 2012 Oregon HCAS Work Plan. Instead of investigating other alternative funding sources, they would do an issue paper on alternative fee paying vehicles (i.e., subsidy amount). Mr. McMullen asked what prompted Mr. Batten to do an issue paper on alternative subsidy amount. Mr. Batten stated he was never satisfied with the way they have been doing it. He would like to ask John Merriss to write a position paper on the approach to handling the subsidy amount and then have someone else write an opposition piece to John's paper. A summary would follow with recommendations. There was a discussion on concerns this may affect the results of the study Mr. Campbell said that there is a policy decision in place and if the policy is being changed, the results could change enough that might

require legislation action to meet the constitutional requirements. Mr. Batten stated that doing an issue paper may or may not change the way they do current or future studies. One recommendation that may come out of this paper is how the legislature could change the amount of subsides. Mr. Russell states that if the changes of the results are a major difference he would like to go back to averaging the results of studies.

- Further discussion ensued on subsidies and the extent to which different classes of vehicles get subsidies, including the use of property taxes and other dollars and where these funds come from. SRT members said that the efficient fee approach would cover these issues.
- Question came up about toll roads and the cost responsible amount and would this be missed if bullet number five is not done. Mr. Batten replied the toll study has been done for the last three recent years and believes there is no new information.

c. Review of Allocation Factors and Methods
    - The developments of new pavement factors in the 2011 study are on the fourth page of the 2013 Oregon HCAS Work Plan.

d. Model Refinements
    - The model refinements are on the seventh page of the 2013 Oregon HCAS Work Plan.
    - Discussion on Pavement Model
    - Mr. Batten stated that the first implementation of the new model designed by Roger Mingo required a five-round process to identify the causes of initial "wacky" results and to fix the problems. Mr. Batten went on to describe how the pavement model works in the HCAS.

e. Data Collection Efforts
    - The data collection efforts are on the fifth and sixth page of the 2013 Oregon HCAS Work Plan.
    - Discussion on re-scoping Statement of Work (SOW), timelines, budgets
    - It is possible that there is not enough time or budget to greatly expand the efficient fee approach. There were suggestions for reviewing other studies, nationally and internationally, on implementing efficient fee approaches. Effort should be devoted to new knowledge rather than rehashing previous issue papers. An SRT member stated that the bridge allocation paper has a lot of overlap with the efficient fees paper and will contain new information.
    - There was a discussion about technology and when new data would be coming in. Mr. Batten said they are expecting transportation revenue forecast early July; also waiting on the agency request budget, WIM data, and the HPMS submission. An SRT member stated that the Revenue forecast should be done by August 1, 2012.

f. Final Reports and Appendices
    - The Appendices are on the eighth page of the 2013 Oregon HCAS Work Plan.

III. <u>Logistics for Meetings and Sharing Documents</u>: To end the meeting there was a discussion on schedules and Google docs.

IV. <u>Other Issues</u>

- Mr. Batten would like to know if ODOT would be able to release a set of numbers —the estimate VMT from heavy, medium, and light vehicles in 2011 and 2013 (6 numbers).
- There was a request for David (Kavanaugh) to attend an SRT meeting.
- Discussion continued on timelines, budget needs, and re-scoping the statement of work.

<u>Action Points</u>

- Expand the efficient fee discussion and address budget issues to do so.
- Invite Jim Whittey and David Kavenaugh to future SRT meeting.

Meeting adjourned: 3:45p.m.

Next Meeting will be determined by SRT members responding to Doodle and setting up monthly meeting dates from July thru October.

Oregon Highway Cost Allocation Study Review Team
Meeting Minutes of July 23, 2012
9:00 a.m. to 12:00 p.m

DAS Executive Building
SFMS Conference Room, First Floor
155 Cottage Street N.E.
Salem, Oregon 97301-3966

Attendees: Study Review Team Members
Jerri Bohard, Tim Morgan, Don Negri, Jon Oshel, Doug Parrow, Bob Russell
On the phone: Mark McMullen
Absent: Craig Campbell, Miguel Figliozzi, Chris Higgins, Mazen Malik

Support Staff and Interested Parties
Carl Batten, Victor Dodier, Steve Drahota, Bert Hartman, Josh Lehner, John Merriss, Lani Pennington, Tom Potiowsky

Welcome, Introduction and Opening Remarks

Tom opened the meeting at 9:10 a.m. and welcomed the Study Review Team (SRT) members and support staff. Participants introduced themselves.

Lani Pennington gave a brief demonstration on accessing Google Docs for State employees who may be having minor difficulties accessing the website on State computers.

The June 14th meeting minutes were approved by the SRT members.

Presentation on Bridge Cost Allocation by Steve Drahota

Steve Drahota, Vice President at HDR, opened his presentation by describing his background with Oregon bridges. Mr. Drahota explained that the purpose of this study is to update the 2002 Bridge Cost Study. He stated that when they were asked to support ECONorthwest they had two questions: what would they change and what would they leave the same in making the 2002 study current.

The 2002 Bridge Cost Study project purpose was to determine the current bridge costs apportioned to different types of design vehicles. Mr. Drahota discussed the intent of that study, which was to find bridge costs per square foot for a whole host of vehicle weights. Factors taken into account included standard legal loads, permit types, different span configurations, and bridge material types. He stated the goal for the current study is to replicate the 2002 study with updates to reflect 2012 design codes, cost trends, and industry practice.

Mr. Drahota continued his slide presentation on the span configurations and bridge types built in the last 10 years and what he would recommend for the present study. He discussed the usage of each relative to local agency and ODOT bridge constructions. Questions came up about the number of bridges that may be outside the common range limit of 200 feet and the percentage of total costs accounted for by bridge spans of more than 200 feet.

SRT members asked if there have been any significant changes in the type or quality of concrete being used in bridges that would impact the amount of load bearing stress. Mr. Drahota answered that there have been two major changes and one subtle change. There was a further discussion about theories and technology relating to concrete strength.

Mr. Drahota next showed a graph of permit vehicle types by axle weight. There followed a discussion of truck design and the types of trucks to use for the analysis, including suggestions to look at vehicle length and focus on the most common current configurations.

Mr. Drahota talked about design code methodology and the general steps of the study approach. The SRT members had concerns about the types of construction, span lengths, and revenue from tolls. Carl Batten emphasized that he will need guidance on various bridge characteristics to take the bridges from his bridge list and match them up with the bridge study.

The SRT members inquired as to what to expect from the changes in this study. This in turn led to a further discussion of local agency construction of bridges -- how this is treated in the HCAS and the extent to which the state is involved.

Efficient fee cost allocation and issue paper(s)

A SRT member presented an outline for the efficient fee issue paper and emphasized he is open to suggested changes. Jon Oshel noted there seem to be two types of studies addressed in the outline and asked how the scope could be reworked.

Jon Oshel and Bob Russell discussed how implementing efficient fees would likely be "phased" in and recommended the issue paper address this approach.

Carl Batten envisioned the issue paper including two different analyses: 1) how can efficient fee methods best be incorporated in future HCASs: what will it take to do this, what was done last biennium, and what might be done to improve the approach and methodology of last biennium's Efficient Fee Study; and 2) if the state wants efficient fees, what would it take to get there, what would it look like, and what issues of data availability, technology, policy, political acceptance, etc. would have to be addressed and satisfactorily resolved before implementation could occur.

There was a discussion of moving away from allocating expenditures to the allocation of costs and of what kinds of external costs should be included in the HCAS.

Bob Russell emphasized the issue paper should address the political "hills" to overcome.

There was a discussion of what approach would be better to use. Jerri Bohard pointed out that the efficient fee approach is not necessarily a better approach than what is currently being done. Other members agreed that it depends on the goals for the HCAS.

A draft outline of the Efficient Fee Cost Allocation issue paper was handed out. Tom Potiowsky stated that Parts I. and II. of the outline are related to past studies. There was a discussion of Part III. and the SRT felt this part should include the availability of data and implementation of efficient fees in the U.S., but not necessarily around the world. Carl suggested moving aspects of the "data needs" from implementation (Part IV., B.) to lessons learned from the 2011 Efficient Fee Study (Part III.). There was a further discussion of

implementation, Part IV., and how this part of the paper would address the phasing issue of overcoming the political "hills" previously mentioned. The SRT members agreed the outline needed to be re-drafted along the lines suggested at today's meeting. The members also endorsed the idea of retaining an external peer reviewer (e.g., Ken Small) to write the "critical review" portion of Part III of the paper.

HCAS-Related Issues

The SRT members next moved to a discussion of the HCAS-related issues the 2013 Legislature is likely to face. Bob Russell stated there are two main issues he sees: 1) moving to the use of VMT for taxing purposes; and 2) revenue raising options for the Columbia River Crossing (CRC).

Data Collection

Carl Batten addressed the data collection efforts for the study and stated he has now received the new Highway Performance Monitoring System (HPMS) information. There was a discussion of the Weigh in Motion (WIM) data for 2011, which seems to be missing transponder ID values for January to October. Bob Russell questioned whether this was the case and requested it be looked into. [ODOT staff investigated this immediately after adjournment of the meeting and the issue now appears to be satisfactorily resolved. An updated status report on the WIM data will be presented at the August SRT meeting.]

Mr. Batten reported that other data collection efforts are on schedule and going well. He stated he has received the Local Roads and Streets Survey (LRSS) and other data. He is waiting on and will need the expenditure data from ODOT's agency requested budget. The revenue forecast and VMT numbers from David Kavanaugh are scheduled to be available in early August.

Methods for the 2013 Study

Doug Parrow asked how local agency expenditures are used in the HCAS. The SRT members described the local dollars that are included and excluded on both the revenue and expenditure side.

Carl reviewed the methods to be used for the traditional HCAS for 2013. He mentioned the new pavement study by Roger Mingo and other refinements that may be somewhat different from past HCASs.

Action Points

- Steve Drahota will talk to Chris Higgins about the bridge cost study.
- Mr. Drahota and Mr. Hartman will look into the percentage of total costs related to bridge spans of more than 200 feet.
- Mr. Hartman will also look at the OR-STP-4E permit configuration to see if (and, if so, how many) trucks exceed 125 feet in length.
- Carl Batten will rework the draft outline for the Efficient Fee Cost Allocation issue paper. The new draft will be posted on Google Docs and sent out to the SRT members.
- The study consultants will produce two issue papers for review by the SRT and discussion at the August SRT meeting.
- HCAS-related issues the 2013 Legislature is likely to face will be discussed further at the next SRT meeting.

Meeting adjourned: 11:40am.

The next meeting will be held on August 21 from 12:00 p.m. to 3:00 p.m. at 222 SW Columbia St., Suite 1600, Portland, Oregon 97201.

Oregon Highway Cost Allocation Study Review Team
Meeting Minutes of September 12, 2012
9:00 a.m. to 12:00 p.m

DAS Executive Building
SFMS Conference Room, First Floor
155 Cottage Street N.E.
Salem, Oregon 97301-3966

Attendees: Study Review Team Members
Jerri Bohard, Craig Campbell, Chris Higgins, Mazen Malik, Mark McMullen, Don Negri, Bob Russell, Doug Parrow
On the phone: Tim Morgan
Absent: Miguel Figliozzi, Jon Oshel

Support Staff and Interested Parties
Carl Batten, Steve Drahota, Dave Kavanaugh, John Merriss, Lani Pennington, Tom Potiowsky

Welcome, Introduction and Opening Remarks

The meeting started at 10:10 a.m. and Mr. McMullen welcomed the Study Review Team (SRT) members and support staff. Participants introduced themselves.

Presentation on 2012 Bridge Cost Allocation by Steve Drahota

Steve Drahota, of HDR Engineering, presented preliminary findings from the 2012 update of the Bridge Cost Allocation Study.

Many SRT members had questions about the study. The study included three prototype bridges, all single span, with lengths of 45, 80, and 150 feet. SRT members asked what percentage of all bridges being built are 45 ft., 80 ft., or 150 ft. single spans. Mr. Drahota will investigate. They also asked about assumed truck configurations for large trucks. Mr. Drahota replied that the study is using a 50,000 lb Type 3 truck, an 80,000 lb Type 3S2, a 105,500 lb Type CTP2B, a 150,500 Type STP4C, and a 258,000 lb Type STP4E, based on data on existing truck configurations and permits.

The study pricing results indicate that the shorter the bridge span, the higher the cost per square foot.

A discussion ensued concerning lane widths. Since just about all ODOT bridges use 12 foot widths, Mr. Drahota said they will use 12 foot lane widths in the study.

Mr. Russell asked how the results of the 2012 updated study will compare with those from the 2002 study. Steve indicated that the updated 2012 study will be similar but higher square foot cots due to higher construction costs since 2002. Mr. Drahota had not yet compared the ratios of costs for higher-vehicle-weight bridges to costs for light-vehicle bridges.

There was a discussion on single versus multiple span bridges. This may not be much of an issue until the Columbia River Crossing (CRC) bridge is built. Another consideration is the proportion of local versus state bridges. Carl says the consideration will be the degree of fungible spending of state and local funds. Jeri noted that most local bridge funding is from federal and state sources. The complete report will be sent to Carl in a few weeks. The SRT will have another look at the report before it is final.

Subsidies Issue Paper

Carl presented the draft subsidy paper. In Oregon, subsidies account for a significant dollar amount, mostly related to publicly owned vehicles, especially those that burn diesel. Farmers, non-profits, and tow trucks also receive subsidies, though not as large. On average, subsidized vehicles pay about 25% of what they would pay if they were a full-paying vehicle.

The issue paper presents 3 approaches to handling subsidies in the HCAS. Essentially, all 3 alternatives add up the subsidy and allocate it to as a cost to individual weight classes. The differences in approaches are:

- Current Oregon Method: Allocate it to full-fee-paying vehicles as a common cost (on the basis of VMT).
- Alternative 1: Allocate it to full-fee-paying vehicles on the basis of the "subsidy cost" imposed by each class.
- Alternative 2: Allocate it to full-fee-paying vehicles as overhead (in proportion to other allocated costs).

Carl pointed out that given the inherent uncertainty in the estimation of the equity ratios, he tells legislators that equity ratios within the range of 0.95 to 1.05 may be considered equitable. Neither alternative 1 or 2 would move the equity ratios outside this band if applied to the 2011 OHCAS.

The arguments for Alternative 1 were written by John Merriss and the arguments for Alternative 2 were written by Carl Batten. Carl enumerated the arguments for the two alternatives and the current Oregon method. A long discussion centered around the philosophical issues of how subsidies are treated. Carl asked the group: "Purpose of subsidy: general fund or highway intent?" All in the room indicated "general fund". Carl said that the intent to have this be a general fund issue is consistent with the intent of Alternative 2.

Overview of ODOT's Revenue & Statewide VMT Forecasts

Dave Kananaugh, Transportation Economist with the Economics & Financial Analysis Unit of ODOT, presented methodological approaches to forecasts and latest forecasts for revenues and VMT.

Mr. Russell asked about the allocation of gross revenues to various accounts in deriving net revenue to state highway funds. Discussion followed.

HCAS Model Data Collections Efforts

Carl handed out a list of data collection needs, indicating which have been completed and which are yet to be collected.

Action Points

Mr. Drahota will have to get back to the SRT with information on how well upcoming bridge projects match to the prototype bridges in the bridge cost allocation study..

Meeting adjourned: 11:50 am

The next meeting will be held on October 16 from 1:00 p.m. to 4:00 p.m. in 222 SW Columbia St., Suite 1600, Portland, Oregon 97201.

Oregon Highway Cost Allocation Study Review Team
Meeting Minutes of October 16, 2012
1:00 p.m. to 4:00 p.m

222 SW Columbia St., Suite 1600,
Portland, Oregon 97201

Attendees: Study Review Team Members
Mazen Malik, Mark McMullen, Tim Morgan, Don Negri, Doug Parrow
On the phone: Craig Campbell
Absent: Jerri Bohard, Miguel Figliozzi, Chris Higgins, John Merriss, Jon Oshel, Bob Russell
Support Staff and Interested Parties
Carl Batten, Lani Pennington, Tom Potiowsky, Roger Mingo (by phone)

Welcome, Introduction and Opening Remarks

Mark McMullen opened the meeting at 1:15 p.m. and welcomed the Study Review Team (SRT) members and support staff. Participants introduced themselves.

The minutes of the September 12, 2012 meeting were approved.

Current Issues in Pavement Cost Allocation Paper by Roger Mingo

Roger Mingo described the background history of the Pavement Cost Allocation used in the Highway Cost Allocation Study.

- The 2011 study has changed considerably the types of pavement damage relationship that have been used in previous studies.
- From 1980s to 2009, there was a large ESAL component used to determine the relevant response from each axle load.
- From 1959 until 2009, the state of art used the fourth power relationship.
- Since 1982, economists have been trying to improve Equivalent Single Axle Loads (ESAL).
- In 2011, Oregon Study built upon very extensive research from Federal Highway Study to support their cost allocation and truck size efforts that based on mechanistic-empirical pavement design guide model.

Mr. Mingo discussed his recent version and the improvement of NAPCOM

- Load equivalence factors (LEF) are independent of ESALs
- The distress equations in the model that estimates load equivalence factors derive from the new mechanistic-empirical pavement design guide model.
- New distress equation are calibrated to pavement condition data collected by states

There was a discussion on the recent results and how they differ from the 2011 study. A question arose as to when the last federal highway cost allocation study was updated. The most recent federal highway cost allocation was in 1997. Mr. Mingo went into detail on comparing load

equivalency factors (LEF) applied to NAPCOM in studies in 2007 and 2009. He states that the 2011 study relies on new federal highway research.

Mr. Batten placed a graph on the screen depicting relative shares of pavement cost assignments to vehicles based on Operating GVW and number of axels. Discussion centered on the very heavy vehicles and the problems of assigning LEFs. Roger Mingo and Carl both suggested "…going back to some version of the WIM-data-augmentation approach we used in the 2009 study before we apply the revised NAPCOM / PaveDAT model." Rather than use regression to smooth the curves as in the 2011 study, they would extrapolate and average from nearby weight groups were data is available to those weight groups where data is missing or seems to not be a reasonable data point. Mr. Mingo also noted that where data is available for cars and trucks under 105,500 lbs., there is no need for making adjustments.

The SRT recommended that this issue paper include the following:

Glossary
Labels on graphs and units where appropriate
Discussion and explanation of axle groups

An SRT member asked, how do you relate the axle weight to the share of damage compared to the average vehicle? Mr. Mingo referred to page 4 on his issue paper. Mr. Mingo described his recommendations and why he would recommend going back to WIM-data-augmentation approach used in 2009 study (see above). SRT members had a discussion about the recommendations and the accuracy of the weight being loaded about the flat spots on the chart. There was also a discussion about consequences of being overweight.

Roger Mingo said he would look at why relative shares were flat over some weight groups and how trucks are loaded.

Discuss detailed flowchart of the model

Mr. Batten discussed the flowchart of two columns: Excel Workbook and HCAS Module. Mr. Batten went into detail discussing what happens in the flowchart. When Carl finished, there wasn't a dry-eye in the room.

Mr. Batten also handed out a sheet with the data and other inputs to HCAS Model. The entire model is run with Python, an open sourced licensed software.

SRT members asked about the studded tires factors; this lead to a discussion about upgrading the studded tire damage study. There was a discussion about comparing fund revenue to expenditures, and public policies. Questions were asked where the HCAS has to be to get to cost allocations rather than expenditure allocations.

Mr. Batten was asked about progress on the study. Carl stated that the study is slightly behind but should be caught up in due time. The VMT estimates are almost done and will be sent to Roger Mingo. Also need to go through project costs for all bridges and assign to new bridge

types. The Electric Vehicle (EV) issue paper will be available for the November meeting. The Efficient Fee issue paper is still in the works.

Doug reminded the SRT about wanting a description of the steps necessary to someday actually implement Efficient Fees - or what has been referred to as the "Pathway to Efficiency" – be included in the paper.

Discussion turned to issues surrounding EVs such as behavior usage, battery life, charging stations, market penetration, and mileage range.

Mr. Batten handed out a draft report from HDR and tables comparing old bridge splits and new bridge splits for the four prototype bridges included in the highway cost allocation model. Carl will post the bridge report written by HDR.

Data Collection Update

Most of all the data is collected.
Mr. Batten is working on getting the VMT done and will send it to Mr. Mingo.
Mr. Batten needs to go through project cost from all the bridges to be assigned to the new bridge types.

Action Points

For Roger Mingo: Edits to issue paper and review certain aspects of relative share curves.
For Mark Ford: An issue paper on electric vehicles and issues surrounding what type of mileage fee might be imposed for cost responsibility.
Possible preliminary model results for November meeting.

Meeting adjourned: 3:40pm.
The next meeting will be held on November 29 from 1:00 p.m. to 4:00 p.m. in Salem

Oregon Highway Cost Allocation Study Review Team
Meeting Minutes of November 29, 2012
1:00 p.m. to 4:00 p.m.

Executive Building 155 Cottage Street NE
Salem, Oregon 97301

Attendees: Study Review Team Members
Mazen Malik, Mark McMullen, Tim Morgan, Don Negri, Doug Parrow, Bob Russell, Darel Capps
Absent: Jerri Bohard, Miguel Figliozzi, Chris Higgins, Jon Oshel, Craig Campbell

Support Staff and Interested Parties
Carl Batten, Mark Ford, John Merriss, Lani Pennington, Tom Potiowsky,

Welcome, Introduction and Opening Remarks

Mark McMullen opened the meeting at 1:12 p.m. and welcomed the Study Review Team (SRT) members and support staff. Participants introduced themselves.

The minutes of the October 16, 2012 meeting were postponed for next meeting.

SRT members were verifying the future meetings: December 17, 2012 (1pm-4pm) in Portland and January 30 (9am-12pm) in Salem.

There was a discussion on future deadlines on the efficient fee paper. Mark McMullen is to send a memo to the Legislation that the study findings are complete and a summary of findings. This memo is to sent on January 31. Carl said the Efficient Fee issue paper will be out in February.

Electric Vehicles Issue Paper

Mark Ford, AICP from Mark and Ford and Associates, LLC., presented a PowerPoint presentation about Cost Responsibility Implications of Electric Vehicles.

Mr. Ford distributed a handout of the PowerPoint.

The paper has three common questions that are being asked: 1. How much revenue loss from electric vehicles? 2. Do electric vehicles have different cost-responsibility compared to other basic vehicles? 3. What would be the appropriate tax rate on electric vehicles?

Mr. Ford talked about common definitions, the difference between the Vehicles (ICE, HEV, PHEV, EV), and key trends. It was suggested to emphasis more on the key trend of fuel efficiency and the increase in revenue and future gas prices. Mr. Ford stated four key technology trends that affect the analysis: battery cost, battery weight, recharging speed, and range.

Question 1: What is the loss of Revenue from electric vehicles? He stated the current revenue loss on registered EVs and PHEVs for 2012. PHEVs are already taxed at an assumed 50%. What per mile tax rate to apply depends on the forecast of market penetration by EVs and PHEVs. Mr. Ford presented a

chart on the summary of 41 PHEV Forecasts for 2050 and Future Loss on EV and PHEV as a percent of Oregon Light Vehicle Fleet. There was discussion on the impact of overall revenues due to the addition of EVs and PHEVs and the higher gas mileage of ICEs.

There was a discussion on the advancement of technology. SRT members talked about penetration of the vehicles and supporting the transportation system. "High mileage car have more potential in greater impact on the highway then an electric vehicle." Consensus is very little change in the next few years for market penetration of electric vehicles. Over the next 6 years, do see much of an impact on equity measures or funding for highways.

Question 2: Do electric vehicles have different cost-responsibility compared to other basic vehicles? Mr. Ford presented highway cost impacts of EVs, common weights and dimensions of typical PHEV, EV, and typical ICE passenger vehicles, what roads EVs and PHEVs use, would EVs and PHEVs operate more during congested periods, and the cost responsibility conclusions. Basic finding: 1) EV and PHEV fit into the basic vehicle class, and 2) from a cost responsibility view, no reason to treat them differently.

Question 3: What should Electric Vehicles be charged? Mr. Ford presented data about the appropriate mileage charges or registration fees based on current mileage equivalencies. An SRT member stated a concern about using alternate annual registration fee rather than total charge per year and questions what should be recommended about the registration fee or VMT; this lead to a discussion. Mr. Ford presented the mileage equivalencies in future years.

Mr. Ford concludes that current revenue loss from EVs and PHEVs is small, future revenue loss estimates depend widely varying forecast, EVs and PHEVs are basic vehicles from cost-responsibility point of view. He also concludes that the equivalent mileage fee to compensate for not paying fuel taxes is a declining target as efficiency of ICEs increases. Mr. Ford recommends 1) Treat EVs and PHEVs the same as all other vehicles of 10,000 lbs and less 2) replace Oregon's fuel tax with a mileage fee 3) until a mileage fee can be introduced charge an additional annual registration fee for Evs and PHEVs 4) Design any future mileage fee to accommodate efficient fee pricing whether electric or not. SRT members discussed on changing the language from annual registration fee to flat annual fee.

A SRT member asked for Mr. Ford to talk a little more about the 10,000 mile a year assumption and future price assumption; this lead to a discussion. A SRT member stated a concern about the 10,000 average number. Also, a concern was stated about the general tone of the paper was more about the future revenue growth instead of the equity and highway cost allocation.

Other Issues

Vertical Clearance
Carl commented that the last study had to deal with a number of bridge costs related to raising bridge heights, such as overpasses. This time around the number of clearance costs is much smaller.

Sellwood Bridge and Multnomah Registration fee
The Sellwood Bridge replacement is essentially a passenger restricted bridge with weight restriction to 20,600 lbs. Since the bridge will not be used for general commercial purposes, the cost is allocated to light vehicles. There is a local additional registration fee to pay for the bridge.

Carl suggested that the study should net out the cost and revenues attributed to light vehicles as it concerns the Sellwood Bridge. General agreement to do this approach.

Columbia River Crossing
Policy package asking for $450 million in the upcoming session. Revenue to secure funding for construction costs not likely in the upcoming biennium, so not much of an impact on the study apart from planning costs.

Preliminary Model Results
Carl presented preliminary results and emphasized that these will change by quite a bit once the Sellwood Bridge treatment is applied. Carl noted changes in determinants to the study that were different from the last study. There was discussion on having these preliminary results available to compare with the next set of results at the December meeting. Also to review VMT forecasts

Data Collection Update

- No update at this time

Other
Bob would like a discussion of averaging say 3 studies to avoid large changes in the results. Mark McMullen asked whether this would impact the thresholds of recommending rate and fee changes to the Legislators.

Action Points
- Mr. McMullen needs to have a letter of findings and some of the final results handed to the legislature by January 31st. Mr. McMullen stated he will have a draft of the letter by Januarys meeting.

Meeting adjourned: 3:40pm.

The next meeting will be held on December 17 from 1:00 p.m. to 4:00 p.m. in Portland

Oregon Highway Cost Allocation Study Review Team
Meeting Minutes of December 17, 2012
1:00 p.m. to 4:00 p.m

222 SW Columbia St., Suite 1600,
Portland, Oregon 97201

Attendees: Study Review Team Members
Mazen Malik, Mark McMullen, Tim Morgan, Doug Parrow, Bob Russell, Jerri Bohard, Jon Oshel
On the phone: Craig Campbell
Absent: Miguel Figliozzi, Chris Higgins, John Merriss, Don Negri
Support Staff and Interested Parties
Carl Batten, Lani Pennington, Josh Lehner, Tom Potiowsky,
On the phone: Victor Dodier

Welcome, Introduction and Opening Remarks

Mark McMullen opened the meeting at 1:10 p.m. and welcomed the Study Review Team (SRT) members and support staff. Participants introduced themselves.

The minutes of the November 29, 2012 meeting were reviewed and conditionally approved pending further review by the SRT. Minutes for the October 18, 2012 meeting will be made available to the SRT on Google Docs (Drive) for review prior to the January meeting.

Summary of Major Findings

Carl Batten handed out a six (6) page Summary of Major Findings for the 2013-2015 Biennium Highway Cost Allocation Study. The discussion started with Exhibit 6-1 and the Annual VMT chart showing the distribution of VMT across various declared weight classes.

VMT
A number of items were discussed concerning VMT:

Past forecasts of VMT have been higher than later estimates.
Distributions in weight classes have changed, in particular, the 78,000 to 80,000 weight class has dropped in proportion of attributed total VMT.

The SRT discussed various reasons for the drop in proportion of VMT for the 78,000 to 80,000 weight class. Questions of detail of filing by trucks were addressed by ODOT staff that clean up data and auditors who review reports. Carl reported nothing seems to be missing from the reported fees.

Discussion turned to the way in which VMT is estimated. Carl said that Dave K. forecasts light, medium, and heavy vehicles. To get the 2,000 weight categories, Carl looks at historical growth

rates, constrains them so they add up to Dave K.'s forecast. Light vehicle VMT is not actual and is estimated based on fuel consumption and fuel MPG for the fleet of vehicles on the road. Carl suggested that the forecast of the number of gallons of fuel sold is more important for the revenue forecast and thus not sure how much the VMT forecast matters. Other SRT members noted that there are other issues facing ODOT where the VMT will become more important as a measure. The SRT suggests looking into the methodology by which VMT is estimated and seeing if the fuel consumption approach is still the best way to do this.

Reasons for the drop in proportion for VMT for the 78,000 to 80,000 weight class were discussed. One reason may be the recession hitting this weight class harder than the other weight classes.

Discussion continued on how ODOT is more concerned today with VMT and is currently analyzing a state-wide survey of households. With the advent of electric vehicles, the changes in driving behavior of a two-car household may not be known.

SRT summarized that VMT is more important today and the methodology for forecasting VMT needs to be reviewed. Carl said he will look into the VMT for the 78,000 to 80,000 weight class. Lani will also look into this.

Cost Responsibility and User Fees
Discussion continued on the rest of Exhibit 6-1. Carl reported the cost responsibility ratios and user fee ratios for full-fee paying vehicles. Carl said in the past the SRT has recommended going with the full-fee equity ratios.

Discussion on why this study was different from the 2009 and 2011 HCASs. Carl said the reasons are related to three methodological areas: subsidy, forecast VMT, and Bridge study factors. The inclusion of the Sellwood Bridge was also mentioned as a one time impact that can change the study results.

The SRT discussed issued surrounding how the Sellwood Bridge is addressed in the HCAS. Various aspects were noted: weight restriction to 26,000, special registration fees in Multnomah County, TIGER funds, …. The SRT summarized that the Sellwood Bridge needs to capture all the unique factors related to weight limits and funding resources.

History of Ratios
Carl discussed Exhibit 6-2 and some of the reasons previously discussed during the meeting as to why 2013 is different. Carl also reminded the SRT of its previous recommendation regarding subsidy adjustment in the 2013 study, which was to report both the full-fee and subsidy-adjusted equity ratios along with an explanation of the reason for changing, but to present the full-fee ratio as the "final answer" unless the full-fee ratio for basic vehicles is more than 5% different from 1.0 and the subsidy-adjusted ratio isn't, in which case the results of the two methods would be averaged.

Bob said there is a third proposal and that is to average the past three studies. The SRT discussed this proposal, noting that if the rule-of-thumb threshold of 5% difference from 1.0 was used to recommend tax and fee changes, the 3-study smoothing approach would still reach this

level if the changes persisted for six years. On the other hand, if there is a real and permanent shift of more than 5% in equity, it would take more than six years before the legislature could begin to address it. Mark summarized that the study will report both the 3-year moving average and the current-biennium results.

Concluding Discussion

The SRT discussed issues that were covered in the meeting. Carl will rerun the model with the old bridge factors for comparison purposes. Discussion covered reasons why VMT has decreased for cars centering on demographics. It was also noted that the ODOT forecast includes demographic factors. The SRT and Carl agreed that a "good" year of VMT data is needed with the use of traffic counters. The January meeting will set aside 15 to 20 minutes to discuss the methodology of estimating VMT and its importance going forward.

Action Points

- Carl will review VMT for the 78,000 to 80,000 weight group. Lani will also check on this.
- A short review of how VMT is estimated will be addressed at the January meeting.
- Carl will rerun the model with old bridge factors to compare to this study.
- Updated Chapter 6 will be available by January 23 or 24 for review before the January 30 meeting.
- During the legislative session, all SRT meetings will be in Salem.
- Doodle meeting planner is going out for the February meeting.

Meeting adjourned: 3:40pm.

The next meeting will be held on January 30 from 9:00 a.m. to 12:00 p.m. in Salem.

Oregon Highway Cost Allocation Study Review Team
Meeting Minutes of January 30, 2013
9:00 a.m. to 12:00 p.m.

Executive Building
155 Cottage Street NE, Salem, OR 97301

Attendees: Study Review Team Members
Mazen Malik, Mark McMullen, Tim Morgan, Don Negri, Doug Parrow, Bob Russell, Craig Campbell, Jerri Bohard,
On the phone:
Absent: Miguel Figliozzi, Chris Higgins, Jon Oshel
Guests: David Ringeisen, Brian Dunn, David Kavanaugh
Support Staff and Interested Parties
Carl Batten, Lani Pennington, Tom Potiowsky,

Welcome, Introduction and Opening Remarks
Mark McMullen welcomed the SRT and guests to the meeting.
Bob Russell moved to accept the meeting minutes from the October and December SRT meetings. The motion was seconded, and the motion passed.
Mark will send a memo to both House and Senate Transportation and Revenue Committees that the final results (unless there are changes made during today's meeting) are completed for the study. Mark will add the Pathway to Efficient Fee issue paper will be forthcoming.

Discuss Updates to Final Report
Carl Batten handed out a one page sheet entitled: "VMT Data and Methods". Carl presented information on where VMT data are obtained. Coverage of all types of vehicles including special vehicles such as school buses (public and private), farm, federal, and motor homes (not an all-inclusive list).

The base year and forecast year VMT for light, medium, and heavy vehicles come from the ODOT forecast and heavy vehicle weight classes use individual growth rates. Carl noted that the methodology has remained basically the same since the 2001 study.

Don Negri asked about a question that Bob brought up during the last meeting concerning the 78-80,000 pound class vehicles. The issue was that this weight class was showing less VMT as a share of total over time. Carl said the problem was one of how the software used by ODOT to pre-process the data handled converting numbers from CSV files to integers and recording "missing value" rather than the number if the number was too large. Very small number of vehicle records were affected, but a large amount of VMT was missing because only the records with the largest VMT were affected. Once corrected, the anomaly went away.

Carl next discussed the new bridge factors. Generally found little change due to the new bridge factors, mostly because bridge-related expenditures are much smaller than in recent prior studies. This study does not include potential funding for the Columbia Bridge Crossing (CRC) on I-5.

Discussion next changed to the recommended rates, found in Chapter 7 of *Highway Allocation Study 2013-2015 Biennium: Final Draft*. No need was found to change rates between light and heavy vehicles on the basis of equity. If changes were recommended, they would be among the 2,000 pound weight classes in the heavy vehicles. Bob Russell commented that the methodology has produced good results for the equity between light and heavy vehicles but more difficult for the 2,000 pound classes within the heavy vehicle group. Discussion

then moved to the 78-80,000 weight class as being "special" based on differences in declared and registered weight. As such, this weight class generally overpays their "fair" share.

Discussion proceeded through Chapter 7 concerning road use assessment fees paid by very heavy vehicles (105,000 pounds and up), flat fees, and subsidies.

Discussion moved to recommended rates found in Chapter 6, Exhibit 6-1. Carl mentioned that he may slightly change the title of Exhibit 6-1. The rule of thumb used by the SRT is to recommend a change in rates when the equity ratios are 5 percent or greater (higher or lower) than 1.0. Discussion continued around how Mazen Malik designs new fee schedules to produce equity when the Legislature changes fees and taxes for other reasons.

While waiting for the arrival of ODOT managers to discuss VMT calculations and forecasting, Doug Parrow noted that there are expenditures not captured by the study in reference to a passage on page 3-9 of the *Final Draft*. Discussion ensued about certain local government expenditures that are not in the study. Carl pointed out that in the short run, "…expenditures will exceed or fall short of the costs imposed.". Discussion turned to the rationale for what costs are covered by title and registration fees – are they mainly used to cover fixed costs?

Mark asked the SRT for discussion on what should be included in the Efficient Fee paper. Bob said that in early meetings the SRT would like an analysis of the "pathway" to the efficient fee. From today, what steps would need to be taken to get to the efficient fee as a working fee structure in Oregon. Discussion continued on behavior changes expected from having efficient fees. Also, looking at the costs of implementing including cost of traffic counters and other equipment.

Discussion returned to the release of the results to legislative committees. Mark noted that the SRT seems in agreement with the general results. He asked whether to discuss with legislative committees about when a change of rates would be recommended, when the study may reach the 5 percent threshold. Discussion did not answer this question. Mazen said he would try to have a joint meeting in the House of Transportation and Revenue Committees and a similar joint meeting in the Senate, so there would be 2 presentations to legislators. Carl confirmed that 2 presentations were in the budget. Bob Russell and Craig Campbell offered to be available for the presentations.

Other issues

VMT Calculation and Forecasting

Given the importance of VMT to the HCAS, a group was invited to give a review of how VMT is calculated and forecasted. Two methods are used for calculating VMT: Highway Performance Monitoring System (HPMS) and Fuels-Based. The presentations followed the handout: Vehicle Miles Traveled (VMT): Calculation and Forecasting, Oregon Department of Transportation, Transportation Development Division, January 2013.

David Ringeisen, Manager, Transportation Data Section, ODOT, presented the HPMS approach. David reviewed the different Automatic Traffic Recorders and other continuous counting sites throughout the state, plus the short term counting sites.

David Kavanaugh, State Transportation Economist, ODOT, presented the fuels-based approach and short range VMT forecasting. David mentioned that the fuels-based approach is used as a check for the HMPS approach. Generally the difference in the two approaches is in the 5-6% range. Discussion on sources of data and methodology for calculating VMT based on fuels for light, medium heavy, and heavy vehicles. Noted was that based on this approach, light vehicles accounted for 93% of all statewide VMT with medium heavy at 2% and heavy at 5%. For the this HCAS, the base year is 2011 and the forecast year is 2014, the middle 12 months of the 2013-15 biennium. Forecasting was discussed as to the factors that go into the modeling.

Brian Dunn, Manager, Transportation Planning and Analysis Unit, ODOT, presented the long range forecasting approach. The purpose is to compare alternative scenarios using an extensive set of factors: demographics,

economics, prices, land use, transportation systems, demand management, and technology. David Kavanaugh said that he also does a long range forecast that is more econometric based that includes more factors (such as more detailed demographics) than the short range forecast.

Discussion turned to slide 12 (A Short-Run Statewide VMT Forecast) to inquire why the growth rate was approaching 4% in 2014. David K. noted that the last time for 4% growth in VMT was in the 1990s. Various reasons were given for the growth rate forecast. It was noted that even with a 4% growth in 2014, the level of VMT would still be below the level in 2006. Further discussion on how demographics play a role (e.g., changes in the driving behavior of 20 year olds), long term shifts might happen in a short period of time, looking at VMT per job or per capita, road tolling businesses mistakes on forecasting demand, and the problems of building needs and timing of when the building actually takes place.

Jerri Bohard noted that all 3 presenters today and their offices work together and keep each other informed.

Discussion turned to Electrical Vehicles (EVs) and the problems this may cause in the future for the fuels-based approached to VMT. Carl noted that the newer EVs relay travel information back to the manufacturer which might be available to help calculate VMT in Oregon for EVs. The slow penetration of EVs in the market and today's small numbers may mean any significant problem with the fuels-based approach could be many years away. The SRT recommended that the study should continue to have a focus on data and investigate any indications that the fuels-based approach is not accurately reflecting VMT, adjustments should be made.

Finishing Comments
Mark said the HCAS results are good and will be reported to legislative committees. The next meeting is set for February 27, mainly to discuss the Pathway to Efficient Fee issue paper. Carl noted that if the Efficient Fee paper is not ready, we may cancel the meeting.

Action Points
- Carl may make slight changes to the title of Exhibit 6-1.
- Carl will change the wording on page 3-9
- The HCAS will focus on the data related to VMT and factors that could impact the fuels-based approach.

Meeting adjourned: 11:45am.

The next meeting will be held on Wednesday, February 27 from 9:00 a.m. to 12:00 p.m. in Salem

Appendix D

Oregon Highway Cost Allocation Study Model User Guide

The 2013 Oregon Highway Cost Allocation Study (HCAS) User Guide describes the steps required to update and run the 2013 version of the Oregon HCAS Model. A user should be able to modify the model assumptions and update the input data and then recalculate the model with the information in this user guide, along with instructions in the model tabs. The HCAS Model User Guide is organized as follows:

Section 1 provides a general overview of the HCAS model and describes the model workbook structure.

Section 2 lists the computer system requirements and software necessary to run the model. This section also describes how to copy the HCAS Model folder from the distribution CD to the local computer and lists the contents of the HCAS Model folder.

Section 3 describes the data sets and any data pre-processing required to update the HCAS model.

Section 4 describes the input text files, model workbook tabs, and output text files. Each input file is described in terms of the file contents and the data required to update the input text file. The tab-by-tab explanation of the model displays a screen shot of the model tab, and then describes the contents of the worksheet, how the data on the tab are used in the model, and the process for updating the data and other user-specified assumptions.

In Section 5, the user is guided through the steps to recalculate the model results and audit the model calculations using the Audit tab. This section also contains tips for troubleshooting errors from recalculating the model.

Section 6 is a user guide for an alternative rate analysis using the HCAS model. In this section the various revenue instruments of the model are described, along with how alternative rates for each instrument will affect the HCAS model results. The *Alt Rates* tab and Alt Rate output tabs are explained in the same tab-by-tab fashion as the other workbook tabs in Section 4. Three case studies provide step-by-step examples of how to conduct an alternative rates analysis for three different revenue instruments.

Section 1: HCAS Model Overview

The purpose of the HCAS is to determine whether each class of highway users is paying its fair share. Paying one's fair share is defined as contributing the same share of total revenues as the share of costs that one imposes.

The HCAS model calculates each user class share of costs and then the user class share of revenues to calculate equity ratios for each user class. Equity ratios close to 1.0 indicate that the vehicle class is paying its share of costs. An equity ratio less than one indicates the vehicle class is paying less than its share of costs, and an equity ratio greater than one indicates the vehicle class is paying more than its share of costs.

The HCAS model, an Excel workbook, is the model user interface for updating data and assumptions used in the model calculations and viewing the output from recalculating the model. The HCAS Model

folder contains the HCAS Model workbook and a series of other input text files and supplementary workbooks and the HCAS Module code file. The majority of the model assumptions and data inputs are located in the main HCAS Model user interface. Some data processing and calculations must be performed in either the supplemental workbooks or using database software on the raw data files to produce summarized data tables, which are then pasted into the HCAS Model workbook.

The HCAS Model workbook tabs are oriented from left to right, with the main control tab at the far left, followed by the tabs for the input for the VMT calculations, input for the costs to allocate, revenue input, intermediate output, auditing, summary results, and report tables. The model tabs are colored to indicate specific characteristic: contains data or assumptions that can be changed by the user (yellow); alternative rate analysis user input (lavender); intermediate output or tables (light blue); final results (dark blue); and alternative rate analysis results (dark purple).

To update and run the model, the user edits the model data and parameters as needed and clicks a "Recalculate" button to run the model program. Recalculating the model will call up the HCAS Module program code, which will read in the data from the HCAS Model workbook and the input text files. Using this data, the HCAS program will perform the VMT, cost allocation, revenue attribution, and alternative rates revenue attribution calculations. The HCAS module will then generate a set of output text files in the HCAS Model folder and populate the output in the Model output tabs with the new results.

The instructions and content provided in this user guide are best followed in the order given. Steps where no modifications are needed can be skipped.

Section 2: Initial Set-Up

This section describes the computer system and software requirements to update and run the HCAS model, how to copy the HCAS Model folder from the HCAS distribution CD, and the contents of the HCAS Model folder.

System Requirements and Software, Settings

The HCAS model can be updated and run using standard computer software and available open-source programming software.

System Requirements To run the HCAS model, the user must open the model in Excel 2003 on a computer with a Windows Operating System.

Excel The HCAS model is an Excel workbook that can be run using Microsoft Office Excel 2003. The Excel security options must be set to enable macros.

Python Python is an open-source, object-oriented programming language. The user must download and install the (free) Python software maintained by the Python Software Foundation.[1]

Text Editor A text editor or Excel can be used to view the input and output files.

Database Software Pre-processing of some of the original data files must be done outside of the HCAS model due to the size of the data sets or the type of data tabulations. The pre-processing can be done using desktop database software such as PostgreSQL or Microsoft Access. PostgreSQL is an open-source object-relational database management system (DBMS) that supports SQL programming language.

Copy the HCAS Model Folder From the Distribution CD

Insert the HCAS distribution CD into the computer CD disk drive. Open the My Computer window to view the HCAS distribution CD contents. Click and copy

[1] Python can be downloaded from: http://www.python.org/download. The Python Software Foundation website also contains documentation and other related material. The user should consult the Python documentation for additional information on how to install the program and open the Python editor.

the HCAS Model folder (and all of the folder contents) to the local computer.

Contents of the Model Folder

There are three types of files in the HCAS Model folder: Excel files, text files, and a Python file. The HCAS Model user interface is an Excel workbook. The HCASModule.py is a Python file containing the model code that performs the model calculations. In addition to the input and output data in the HCAS Model Excel workbook, the HCAS Module reads in a set of input data files in ".txt" (text) format and will produce output text files. Also included in the HCAS Model folder are supplemental Excel workbooks containing data and calculations performed outside of the Excel model workbook. Table 1 lists the files in the HCAS Model folder on the distribution CD.

Section 3: HCAS Model Data and Pre-processing of Data for Model

This section describes the original data files and the data sources required to update the HCAS model. Many of these data files are obtained from sources within the Oregon Department of Transportation (ODOT) and are produced or adapted specifically for the Oregon Highway Cost Allocation Study. For each data set, the data files, source for the data, and any pre-processing of the data outside of the model is described. The SQL code corresponding to the pre-processing of the data for the 2013 HCAS can be found in Appendix F.

Special Weighings Data

Source: ODOT

Special weighings studies are data collected at weigh stations on special days when every truck is weighed. Normally, empty trucks do not need to be weighed. The special weighings data have accumulated from prior studies plus additional studies are completed each year.

Table 1: Files in the HCAS Model Folder

File Name	File Type	File Use
HCAS Model	Excel	Model user interface
Base VMT	Excel	Supplemental Excel workbook
PE and ROW	Excel	Supplemental Excel workbook
HCASModule	Python	Python model code
AxleShares	Text	Input text file
BasicSharePeak	Text	Input text file
Bonds2003-2005	Text	Input text file
Bonds2005-2007	Text	Input text file
Bonds2007-2009	Text	Input text file
declared_pave_factors	Text	Input text file
DeclaredOperating	Text	Input text file
DeclaredRegistered	Text	Input text file
paveFactors	Text	Input text file
PCEFactors	Text	Input text file
SeedData	Text	Input text file
SimpleFactors	Text	Input text file
allocatedCosts_bond	Text	Output text file
allocatedCosts_federal	Text	Output text file
allocatedCosts_local-federal	Text	Output text file
allocatedCosts_local-other	Text	Output text file
allocatedCosts_local-state	Text	Output text file
allocatedCosts_other	Text	Output text file
allocatedCosts_state	Text	Output text file
Bonds2009-2011	Text	Output text file
flat_fee_report	Text	Output text file
missing_pavement_factors	Text	Output text file
VMTMaster	Text	Output text file
SubsidiesbyVehClass	Text	Output text file

Weigh-In-Motion Data

Source: Portland State University/ODOT

Special weighings rarely take place at freeway weighing stations because of the volume of trucks passing through. Weigh-in-motion (WIM) sensors, however, do weigh every truck passing over multiple points on Oregon's freeway system, as well as at other, non-freeway locations. WIM data provide the study with a more-accurate description of the distribution of operating weights.

Pre-processing of Special Weighings Data

Some additional columns are added for the new special weighings data, calculated from the columns in the original data and

appended to data from prior special weighings. The WIM data are then appended to the special weighings data, with the two data sources given weight in proportion to the distribution of VMT on functional classes where the weighing data were collected. From the weighings data, we calculate distributions of operating weight for each declared weight and distributions of vehicle configurations for each operating weight. The processed weighings data are used to create the table of the declared weight to operating weight for the *DeclaredOperating* input text file.

HPMS Data

Source: ODOT

The Highway Performance Monitoring System (HPMS) is a federal program that collects data from each state every year. Over the years, the number of data elements that must be reported has been reduced, but the data are still extremely useful in highway cost allocation and in developing pavement factors.

Processing of HPMS Data

The entire HPMS data set is an input file for the NAPCAS model. It uses fields that describe pavement characteristics, base, soil type, and climate zone. The HPMS data are also used in the process of estimating distributions of VMT by functional class and ownership in the *VMT by FC* tab (VMT by FC is the vehicle miles traveled [VMT] by the facility class [FC], where each facility class is defined by a functional class and ownership).

To perform the data tabulation of the HPMS data for the *VMT by FC* tab, divide the HPMS section AADT by the section length (after converting the section length from kilometers to miles) to calculate the section VMT. Because HPMS is a sample, each section VMT is expanded by the section weight to estimate the VMT by functional class and ownership statewide. A summary table of VMT by functional system and ownership is tabulated and pasted into the *VMT by FC* tab such that the rows are the functional system, the column headings are ownership, and the cell entries are the sum of VMT.

FHWA *Highway Statistics* Data

Source: Office of Highway Policy Information, Federal Highway Administration, http://www.fhwa.dot.gov/policy/ohpi/hss/hsspubs.cfm

The Federal Highway Administration (FHWA) publishes an annual report called *Highway Statistics*. Data from tables VM-1 and VM-2 from *Highway Statistics* are used in the HCAS model for the base year VMT and *VMT by FC*. The Oregon row from Table VM-2, Functional Travel System Travel (Year) 1/Annual Vehicle-Miles, is pasted into the *VMT by FC* tab in the appropriate row. The Oregon row from Table MV-7, Publicly Owned Vehicles, is used in the *Federal* tab in the Base VMT workbook. FHWA usually begins to release tables and chapters from *Highway Statistics* in late fall or winter of the following year. Use the *Highway Statistics* report corresponding to the study base year. If the base year *Highway Statistics* are unavailable, use the most recent data that are available.

The appropriate rows from these tables should be pasted into the yellow-shaded cells in the HCAS Model and Base VMT workbook tabs where indicated. No pre-processing of this data is required.

GSA *Federal Fleet Report* Data

Source: U.S. General Services Administration, www.gsa.gov/vehiclepolicy

The *Federal Fleet Report* is an annual publication produced by the U.S. General Services Administration (GSA). The *Federal Fleet Report* provides data on the number of federal vehicles and vehicle miles traveled by vehicle type and department or agency in the base year. These data are used in the Base VMT workbook as part of the federal vehicle class VMT calculations. The tables from the *Federal Fleet Report* used in the study are Table 2-5 (Passenger Vehicles), Table 2-6 (Trucks and Other Vehicles), and Table 4-2 (Average Miles Per Vehicle).

The *Federal* tab in the Base VMT workbook lists the tables and rows from the *Federal Fleet Report* that should be pasted into the yellow-shaded cells on the tab. No pre-processing of this data is required.

Transit VMT Data

Source: Tri-Met, Lane Transit District, Salem-Keizer Charriots Transit District

Update the transit bus VMT on the *Transit* tab in the Base VMT workbook with VMT information from the three largest transit agencies in Oregon: Tri-Met, Lane Transit District, and Salem Keizer Charriots. Call each transit district to request information on the total calendar year VMT for buses by bus weight class for the base year. Enter this data directly into the yellow-shaded *Transit* tab.

VMT Estimates and Forecast

Source: Financial and Economics Analysis Unit, ODOT Financial Service Branch

The Financial and Economic Analysis Unit of ODOT's Financial Services Branch produces VMT estimates for use in its estimation of revenues for budgeting. These become available at the same time as the Agency Request Budget, which has been at the end of August.

The ODOT VMT estimates and forecast are used to determine the base year to model year VMT growth rate for light, medium-heavy, and heavy vehicle groups. The data do not require pre-processing and should be pasted into the yellow-shaded cells on the *VMT Growth* tab so that the new base year and forecast year match the base year and forecast year labels to the left of the yellow-shaded *Year* cells.

The base year VMT from the ODOT forecast are also pasted into the *Intermediate Base VMT* tab in the Base VMT workbook for the control total VMT for the light and medium-heavy vehicle classes.

VMT Growth Rates for Heavy Vehicle Classes: Adjust the individual (2,000-pound increment) VMT growth rates for the heavy vehicles (26,001 pounds and up) such that the total heavy vehicle VMT growth rate matches the group VMT growth rate from the ODOT forecast while allowing for variation across weight classes within the heavy vehicles. Small modifications in the growth rates for the groups from 78,001 and 104,001 pounds will have the greatest impact on the total heavy vehicle group VMT growth rate because most heavy vehicle VMT are in these two weight classes. The heavy vehicle class growth rates should not be adjusted until the Base VMT workbook has been completely updated and the HCAS Model workbook link to the Base VMT workbook data has been updated because the group growth rate will depend on the VMT for each individual weight class.

Motor Carrier Data

The Motor Carrier Transportation Division (MCTD) of ODOT produces data on truck registrations, WMT collections, and flat-fee collections. These data are cleaned and consolidated into a set of reports called *Highway Use Statistics*. The cleaned, unconsolidated data are used in the study.[2]

---

[2] Weight class and axle class are two important variables used in the HCAS model for defining vehicle classes. HCAS weight classes are shown in the *Codes* tab in the model. Basic vehicles are those vehicles weighing less than 10,001 pounds. For vehicles from 10,001 to 200,001 pounds, weight classes are defined in 2,000-pound increments, (e.g. 10,001, 12,001, 14,001...80,001, 82,001...200,001). The vehicle weight recorded in the original data source is used to assign the record to a HCAS weight class. For a weight recorded in pounds, subtract one from the entered weight, divide by 2000, truncate or round to the decimal point, then multiply by 2000 and add one. Or Trun((Weight-1)/2000)*2000 + 1 in SQL or Round((Weight-1)/2000,0)*2000+1 in Excel.

Axle class is assigned for weight classes 80,001 pounds and up. The HCAS axle class is either a zero, five, six, seven, eight or nine (or more). If the weight class is under 80,001 then axle class is zero. For 80,001 and above, a record with five or fewer reported axles is assigned to axle class five, and nine or more axles are assigned to axle class nine. If the reported axle count is six, seven, or eight, the axle class is set equal to the reported number of axles.

Motor Carrier Registrations Data

Source: Motor Carrier Transportation Division, ODOT

The Motor Carrier Registrations data are used to develop distributions of registered weights by declared weights for the declaredRegistered input text file. For each declared weight category, the declaredRegistered input file contains the share of vehicle registrations at a registered weight.

Pre-processing of the Motor Carrier Registrations Data

The Motor Carrier Registrations data are pre-processed using SQL in PostgreSQL. The share of vehicle registrations for the distribution of registered weights for each declared weight is calculated from the count of registrations. The final processed table for the declaredRegistered input file contains the declared weight, the registered weight, and the share of registrations at that declared weight.

Flat Fee Collections Reports

Source: Motor Carrier Transportation Division, ODOT

The Flat Fee Report data are used to calculate the Flat Fee VMT for the Base VMT workbook and to estimate VMT per month and axle shares for the *Revenue* tab in the HCAS model.

Pre-processing of the Flat Fee Collections Reports

The Flat Fee Collections Reports are processed in an Excel workbook or using SQL queries, depending on how the Flat Fee Report data are delivered. The processed flat fee data are then pasted into the yellow-shaded cells on the *FlatFee* tab of the Base VMT workbook and into the *Revenues* tab in the HCAS Model workbook.

A summary table of the monthly miles and count of the monthly reports from the *Flat Fee Reports* tab should be created using a series of pivot tables, or the user may choose to export the Flat Fee Reports data and create the summary tables using an alternative software program. The pivot table rows are commodity (comm), weight class, and axle count. A "mile_non_zero" indicator can be created and used in the Page Fields so that the pivot table can produce results for All Observations or for records where miles are non-zero. In the model calculation, the log truck flat fee analysis includes an adjustment for log truck empty miles to account for the log hauler option of declaring a lower weight when their trailer is empty and stowed above the tractor unit. Because the analysis will account for the empty log truck VMT, the input log truck VMT must be correctly entered at their fully loaded weights. Log trucks reported at weights under 56,000 pounds are assumed to be a data entry or report error (*i.e.*, reported as the empty or average operating weight when the weight reported should be the loaded weight). Thus, log trucks with a reported weight under 56,000 pounds should be reassigned to a higher weight class. If the plate number for the under-56,000-pounds record is also reported at a higher weight, the lower weight record is entered at the higher weight class. Log truck records entered at weights under 56,000 pounds that are not reassigned to a higher weight class are excluded.

For the *FlatFee* tab in the Base VMT workbook, the miles reported in the Flat Fee Reports are summed for each commodity and axle class and then the number of non-zero records and total number of records are counted. These fields become columns A through E in the *FlatFee* tab in the Base VMT workbook.

For the *Revenues* tab in the HCAS Model workbook, create a pivot table or summary table results using the Flat Fee Reports data. The records where miles are non-zero ("non-zero miles") are used to calculate the average VMT per month and the axle share of VMT for each weight class.

For the 2009 HCAS, SQL queries and a Supplemental Flat Fee workbook were used to pre-process the flat fee data. See the 2009 HCAS User Guide for procedures used in that study.

WMT Collections

Source: Motor Carrier Transportation Division, ODOT

The WMT Collections (or Payments) Reports are pre-processed and used in the Base VMT workbook to determine the VMT for the various WMT vehicle classes.

Processing of the WMT Collections Reports

The size of the WMT Collections Report data set requires that the data pre-processing take place outside of the HCAS model. The SQL code for the pre-processing of the WMT data for the 2013 HCAS is provided in Appendix F. The SQL code assigns the records to a weight class and axle class using the HCAS weight class and axle classes, and sums the miles traveled from the WMT Collections Report for each weight and axle class. This summary table is then pasted into the *WMT* tab in the Base VMT workbook.

Road Use Assessment Fee Data

Source: Motor Carrier Transportation Division, ODOT

The road use assessment fee (RUAF) data are the records from the vehicles paying the RUAF at weight class 96,001 pounds and above. Each RUAF record contains an ID number, issue date, axles, weight, miles, and tax. The RUAF data are used to determine the VMT by RUAF vehicles by weight and axle class in the Base VMT workbook.

The RUAF data do not require any pre-processing. Paste the RUAF data directly into the yellow-shaded cells on the *RUAF* tab in the Base VMT workbook. Make sure the weight class and axle class formulas assign a valid weight class and axle class to all of the RUAF records (columns G and H in the *RUAF* tab).

Local Government Revenues and Expenditures

Source: ODOT-conducted Local Roads and Streets Survey

Prior-fiscal-year (corresponding to the model year) revenues and expenditures by local governments come from the Local Roads and Streets Survey (LRSS) compiled by ODOT.

The processing of local government data has evolved significantly in each of the last three studies. For the 2009 Study, the local cost approach and calculations have been formalized and incorporated into the model in the *Local Costs* tab. The same calculations and *Local Costs* tab was used in the 2013 Study. Paste the LRSS data into the *Local Costs* tab and the raw data on base year expenditures to the estimates of future expenditures by work type and funding source.

Budgeted Non-Project Expenditures

Source: ODOT Agency Request Budget

Budgeted non-project expenditures come from spreadsheets used to develop the Agency Request Budget and are required to update the *Non-Project Costs* tab. These data are available around the end of August and are completed by the ODOT Finance Section. The Highway Programs Office provides the breakdown of non-project maintenance costs by maintenance work type. The non-project expenditure data are pasted into the *Non-Project Costs* tab; no pre-processing is required.

Project Expenditure Data

Source: Various analysts within ODOT Financial Services

Project cost information is collected from several sources. The ODOT Cash Flow Projection system tracks expenditures by work category for each project per month. Upon request, project expenditure files are produced that contain data for all projects with expected expenditures in the upcoming biennium. ODOT Finance then matches these projects to the Project Control System (PCS) to obtain additional data about the nature of the projects, particularly the project funding sources and project work types. For bridge projects, additional research is conducted using information in the PCS files, the Oregon Bridge Log, or correspondences with ODOT bridge section staff to determine relevant characteristics of the bridges involved so

that the expenditures may be assigned to bridge types. Expenditures on different bridge types are allocated using different factors. The project expenditures data are requested when the Agency Request Budget data become available so that the project data are consistent with the budget, around the end of August or early September.

Processing of Project Expenditure Data

Given the number of different sources, some in non-standardized formats, used to create the project expenditures input data, there is no formalized method for processing and developing the project costs table. The general steps for processing and creating the project expenditures table are the following:

1. Identify projects with expenditures during the study period from Cash Flow Projections
2. Assign a functional class to the project using information in the Project Control System
3. Determine the share of project funding from each funding source
4. Determine the project HCAS work type(s) using the project information and/or the ODOT-specified work types
5. If the project has more than one work type, determine the share of project expenditures by work type
6. For each bridge project work type, assign bridge type

Using the list of projects in the Cash Flow Projection and PCS, create a list of projects with expenditures in the study period.

Assign a functional class to each project. If a functional class is included in the project location information, validate that the functional system is a valid FHWA functional system or HCAS facility class. Projects are assigned a functional class based on the project funding sources if functional class is not provided. Functional system of zero is the default for unknown functional system.

For each project, determine the share of project expenditures by funding source. Project expenditure shares by funding source reflect the total project funding, not necessarily the expenditures during the study period. Shares or dollar amounts by funding source are provided in the PCS data. Funding source should be entered as federal, state, bond, or other. Make sure the funding source is spelled correctly and is not capitalized.

Use the PCS project work type(s) and project description (SXYR Work Description) to assign HCAS work type(s) to the project. The project may have up to three work types. ODOT may have already listed three project work types and the work type funding shares in PCS. The analyst should review the ODOT-assigned work types and then assign the appropriate HCAS work type. The share of total project costs associated with each work type must be entered when multiple work types are assigned. Only assign multiple work types when the share of total project costs can be identified for each work type.

Bridge types are assigned to all projects. If the project is not a bridge project, then the bridge type can be entered as zero. Zero is also used when the bridge type is unknown. The bridge length and number of spans determine the bridge type. When multiple bridge types are being built or replaced in a single project, the bridge types may be entered separately, as if they were different work types, but using the same work type code. For example, if a project is a bridge bundle project replacing a single span bridge and a multi-span bridge, the bridge replacement work type would be assigned twice to the project, once for the single span bridge type and once for the multi-span bridge type. Again, the project can only have up to three work type/bridge type combos, and the share of total project funding must be identified for

each work type/bridge type when broken out separately. Lists of work types and bridge types are located in the *Codes* tab.

The bridge length and spans may be reported in the PCS files, or the bridge number can be used to look up the bridge characteristics in the Oregon Bridge Log. The Oregon Bridge Log[3] will likely display the former bridge type in the case of bridge replacements. If the project is a bridge replacement, it may be necessary to contact the ODOT Bridge Section to find out information on the new bridge type.

For the 2013 HCAS, the project expenditure file was first created by working in a file where each project was a single record with columns for funding sources, funding source project cost share, functional class, work types, work type project cost share, bridge types, and total project amount. Once all of the funding source, work type, and bridge type data are entered, make sure that the entered data are valid and that the funding source and work type shares sum to 100 percent. Also make sure that the project expenditure is positive. The project expenditure data are then used to create the table of project expenditures by funding source and work type for the *Project Costs* tab. Because a project may have up to four funding sources and up to three work types, each project can potentially be turned into twelve separate entries in the *Project Costs* table. Paste the final project costs table into the *Project Costs* tab using the format shown in Table 2.

Table 2 displays an example of the *Project Costs* tab entries for a project that has two funding sources (state and federal) and three work types (11, 21, and 22). "Dollars" is produced by multiplying the total project expenditures in the biennium by the fund source share and work source share. Key number is included for project identification; the key number is not read into the model.

Table 2: Example of a Project With Multiple Work Types and Funding Sources Entered in the *Project Costs* Tab

Funding	Work Type	Functional Class	Bridge Type	Dollars	Key Number
state	11	0	0	1,194,517	15740
state	22	0	0	95,018	15740
state	21	0	0	67,870	15740
federal	11	0	0	10,597,355	15740
federal	22	0	0	842,971	15740
federal	21	0	0	602,122	15740

Budgeted Revenue Control Totals

Source: Financial and Economics Analysis Unit, ODOT Financial Services Branch

Budgeted revenue control totals come from spreadsheets used to develop the Agency Request Budget by the Financial and Economics Analysis Unit of the ODOT Financial Services Branch. These data are usually available at the end of August before the upcoming biennium.

The data in the Revenue Forecast worksheet are pasted into the yellow-shaded cells on the *Rev Forecast* tab in the HCAS workbook; no pre-processing of the data is required. Gross revenue amount by revenue source is linked to the appropriate revenue control total on the *Revenues* tab.

Current-Law Tax Rates and Fee Schedules

Source: Oregon Revised Statues, or the ODOT DMV and MCTD websites

Current-law fuel tax rates, WMT rates, registration and title fees, and other vehicle- and road-use-related fees may be obtained from Oregon Revised Statutes and Oregon Administrative Rules. The rates and fee schedules can also be found at the ODOT Department of Motor Vehicles (DMV) and Motor Carrier Transportation Division (MCTD) websites. In particular, the WMT Schedule A and B tables can be found at the MCTD website, where the

[3] The Oregon Bridge Log is an annual ODOT publication. The Oregon Bridge Log does not contain information on covered bridges. Most covered bridge projects are maintenance projects (on the covered structure); most covered bridges are single spans less than 125 feet.

WMT rates are calculated for each weight class and axle combination for Table B.

Rates must be converted to the proper unit for each revenue instrument, otherwise no calculations or processing is required. Update the current tax rates if changes have been made in the Oregon Revised Statutes.

Estimated Average Basic-Vehicle Miles per Gallon

Source: Financial and Economics Analysis Unit, Financial Service Branch, ODOT

The ODOT revenue forecast and budget-development process incorporates assumptions about fuel consumption per mile that are developed from data from Global Insight and other sources. These fuel consumption assumptions are used to inform the user choice of parameters on the *Gas and Diesel* tab in the model. While the fuel consumption per mile assumptions provided by ODOT are not direct inputs into the model, the user-specified assumptions regarding the implied MPG on the *Gas and Diesel* tab should be generally consistent with the assumptions made by ODOT.

DMV Vehicle Registrations

Source: Department of Motor Vehicles, Request made by ODOT Financial Services

The DMV registrations data are used to build the estimates of VMT by weight class and tax class for the base year for certain vehicle tax classes. For the 2013 HCAS, ODOT Financial Services was granted permission to obtain de-identified registration records from DMV.

Processing of the DMV Registrations Data

Due to the size of the DMV registrations data, pre-processing of the registrations takes place outside of the HCAS model. The SQL code used to process the DMV data for the 2013 HCAS can be found in Appendix F.

Two summary tables created from the DMV registrations are used to update the model: a summary table of motor home registrations by vehicle length, and a summary table of vehicle registrations by fuel type and weight class for the following vehicle tax classes: Commercial Trucks (10,001 to 26,000 pounds), Tow Trucks, Farm Vehicles, Charitable Non-profit, E-Plate, and School Buses.

Motor home registrations data do not necessarily include vehicle weight, so registrations are tabulated by vehicle length and assigned a HCAS weight class using vehicle length. The summary table is pasted into the *MotorHomes* tab in the Base VMT workbook and has the following columns: motor home plate indicator (HC), vehicle length, and sum of registrations (by vehicle length).

For the main DMV summary table, weight class is assigned to each registration record by converting the registered vehicle weight to the standard HCAS weight class. A fuel-type variable is also created from the DMV fuel variable to identify whether the vehicle is gasoline powered or non-gasoline powered (gasoline-powered vehicles corresponded with fuel codes 1 or 5 in the 2009 DMV registrations data; fuel type 6 was excluded for the registrations data).

The license plate string is used to identify the vehicle tax classes using the plate vehicle class designations. Table 3 lists the plate identifiers for the vehicle tax classes included in the summary DMV table created for the *DMV* tab in the Base VMT workbook.

Table 3: HCAS Vehicle Classes by DMV Plate Identifier

Plate Identifier	Vehicle Class
B	Bus
CH	Charitable/non-profit
E	Exempt (E-Plate)
F	Farm
HF	Heavy fixed-load (e.g., backhoes)
HS	Heavy trailer (over 8,000 pounds)
PF	Permanent fleet
SC	School bus
TW	Tow truck
T	Truck

Pavement Factors

Source: RD Mingo & Associates

RD Mingo and Associates produce Oregon-specific pavement factors using the Oregon HPMS submittal data in the new 2010 National Pavement Costs Model (NAPCOM). The pavement factors are used to update the *PavementFactors* text file and the pavement allocators on the *Policy* tab. Minimal processing of the pavement factors data may be necessary to get the pavement factors into the correct format for the *PavementFactors* input text file.

Section 4: HCAS Model, Input Files, and Output Files

Input Text Files

This section describes the input text files used to recalculate the model. The user may update some of the input text files, however some files are carried forward to future studies without modification. Each input text file is listed below, followed by a description of how the file is used, the file contents, and how to update the file. See Appendix E for more information on the input and output text files.

Bonds2003-2005.txt
Bonds2005-2007.txt
Bonds2007-2009.txt
Bonds2009-2011.txt
Bonds2011-2013.txt

These files contains the prior allocated bonds from the 2003, 2005, 2007, 2009, and 2011 studies, respectively. The prior allocated bonds are read into the model and used in the class method that performs the bond cost allocation calculations. The file contents are the prior allocated bond expenditures (dollars) by weight class and axles. These files are not updated.

DeclaredOperating.txt

This file contains a distribution of operating weights for each declared weight and the share of vehicles within each operating weight created from the special weighings data. The DeclaredOperating data are used to build the pavement factors for each row of the VMT data in the VMT calculations of the model.

DeclaredRegistered.txt

This file contains a distribution of registered weights for each declared weight and the share of vehicles within each registered weight created from the Motor Carrier Registrations data. The DeclaredRegistered data are used to attribute registration and title fee revenues.

paveFactors.txt

This file contains the responsibility shares for flexible and rigid pavement costs by weight class and number of axles. This file is produced by Roger Mingo using the HPMS submission data in the NAPCOM model.

PCEFactors.txt

The *PCEFactors* file contains the passenger-car equivalents (by weight class and number of axles) on regular, uphill, and congested roadways. This file is not updated.

SeedData.txt

The *SeedData* file contains VMT by weight class, functional class, ownership, and number of axles. (This file essentially contains proportions that guide the model as it fits data for the VMT master table.) This file is not updated.

SimpleFactors.txt

This text file contains vectors of ones and zeros that help the model select the appropriate VMT for cost allocation. For example, for a cost allocated on over-106,000-pound VMT, the model will isolate the proper VMT records by applying a simple factor. In this case, a vector containing zeros for all weight classes except those above 106,000 pounds is applied to the VMT master. This file does not need to be updated for new studies unless the allocators are changed.

Supplemental Excel Workbooks

Two supplemental Excel workbooks are included in the HCAS Model folder for the processing of input data. Each of these workbooks should be updated; the specified output from these workbooks is either pasted into the HCAS Model workbook or, in the case of the Base VMT workbook, the supplemental workbook is linked to the HCAS model. As in the HCAS Model workbook, the majority of the required calculations and data tables are automatically updated when the yellow-shaded input cells are modified.

The supplemental workbooks used in the 2013 HCAS are the Base VMT workbook, which is linked to the *Base VMT* tab in the model, and the Split PE and ROW workbook, which calculates the shares for the Preliminary Engineering (PE) and Right-of-Way (ROW) work type allocators that should be pasted into the *Policy* tab in the model workbook.

Base VMT Workbook

Base-year VMT is calculated in a separate supplemental workbook because of the number and variety of data sources and the size of some of the input data tables used to calculate the base VMT. For the 2013 HCAS model, the approach for calculating the base VMT was formalized with the intermediate calculations performed in a supplemental workbook and linked to the model. To the extent possible, this allows the user to see the steps from the raw, original data to the detailed base-year VMT table. The following is a tab-by-tab explanation of the data and calculations in the Base VMT workbook.

Flat Fee

The *FlatFee* tab contains the calculation of the flat fee VMT. Carriers of certain commodities (logs, sand, gravel, and chip) can opt to pay a flat monthly fee. These carriers submit monthly reports of their mileage at their loaded operating weights. Flat fee VMT are tabulated from these Flat Fee Collections Reports in the Flat Fee VMT Axle workbook and then pasted into the yellow-shaded cells on the *FlatFee* tab in the Base VMT workbook. Because some of the monthly flat fee collections data do not report VMT, we tabulate the VMT per month from reports where miles were non-zero and then multiply by the total number of months reported in the flat fee data (all observations).

Flat Fee VMT: Chip, Sand & Gravel, and Log by Weight Class

Instructions:
1. Paste in the tabulated data for 'All Observations' and 'Observations with non-zero miles' into yellow-shaded cells.
2. Calculate Miles per Month for the non-zero miles (Column F).
3. Check formulas in right-most table where the flat fee VMT for each commodity are calculated as Months (from All Observations) multiplied by Miles per Month (from nonzero
4. Log truck VMT reported for weight classes under 56,001 pounds is excluded.

Commodity	Weight Class	Sum of Miles (non-zero miles)	Count of Months (non-zero miles)	Count of Months (all)	Miles per Month	Total
3	100001	830641	169	216	4,915	1,061,647.67
3	102001	338352	80	80	4,229	338,352.00
3	104001	2327901	477	525	4,880	2,562,155.19
3	58001	1898	1	1	1,898	1,898.00
3	78001	26034699	6247	6558	4,168	27,330,807.75
3	80001	1807218	416	429	4,344	1,863,693.56
3	82001	215733	52	52	4,149	215,733.00
3	84001	1796722	445	468	4,038	1,889,586.28
3	86001	6638992	1458	1502	4,553	6,839,345.67
3	88001	6537302	1278	1312	5,115	6,711,220.83
3	90001	799129	182	193	4,391	847,428.01
3	92001	484980	110	114	4,409	502,615.64
3	94001	1720512	396	396	4,345	1,720,512.00
3	96001	1531641	363	399	4,219	1,683,539.28
3	98001	2142986	447	447	4,794	2,142,986.00
2	100001	58275	13	13	4,483	58,275.00
2	104001	3623360	670	672	5,408	3,634,176.00
2	28001	1932	6	7	322	2,254.00
2	46001	41515	26	30	1,597	47,901.92
2	48001	35088	36	41	975	39,961.33
2	50001	18673	11	11	1,698	18,673.00
2	52001	5061	5	5	1,012	5,061.00

Flat Fee VMT table

Weight Class	Flat Fee Vehicles Log (Comm=3)	Flat Fee Vehicles S&G (Comm=2)	Flat Fee Vehicles Chip (Comm=1)
26001		-	-
28001		2,254	-
30001		-	-
32001		-	-
34001		-	-
36001		-	-
38001		-	-
40001		-	-
42001		-	-
44001		-	-
46001		47,902	-
48001		39,961	-
50001		18,673	-
52001		5,061	-
54001		50,413	-
56001	-	24,685	-
58001	1,898	13,835	-
60001	-	-	-
62001	-	-	-
64001	-	-	-
66001	-	-	-
68001	-	-	-

The miles per month for the non-zero mile observations is calculated in column J as the sum of miles divided by count of miles (*i.e.*, months). The flat fee VMT for each commodity by weight class is calculated by multiplying the miles per month from the non-zero mile observations by the number of months for all observations. Log truck VMT for weight class 56,001 pounds and under should be zero. Check to see that the miles per month formula is filled in for all of the flat fee records. Flat fee reports for vehicles with weights over 105,500 pounds are data entry errors and are excluded from the Flat Fee VMT table.

Pasting in the Flat Fee-All Observations and Flat Fee-Miles NonZero tables into the yellow-shaded cells will automatically update the Flat Fee VMT summary table.

WMT

The WMT VMT are tabulated from the base-year WMT Collections Reports. The WMT data are too large for a workbook, so pre-processing requires using SQL code to produce the summary table of WMT VMT by weight and axle class, which is pasted into the yellow-shaded cells on the *WMT* tab in the Base VMT workbook. The HCAS weight class and axle class variables are created from the reported weight and axles in the WMT reports. A WMT VMT summary table is then created for each weight class and axle class.

The WMT VMT table to the right of the yellow-shaded input table is automatically updated with the new WMT VMT when the yellow-shaded input cells are updated.

RUAF

The road use assessment fee (RUAF) records from the base year are pasted directly into the yellow-shaded cells in the *RUAF* tab. The HCAS weight class variable is calculated from the RUAF-reported vehicle weight. The RUAF collection records do not require any pre-processing. The summary RUAF table (to the right of the yellow-shaded cells) sums the VMT from the RUAF data by weight and axle class. Make sure the formulas that sum the VMT include the entire range of the RUAF data. The RUAF data provide the exact VMT by weight class for vehicles in this tax class. The model assumes there is no evasion or avoidance of the RUAF.

DMV-Other

The *DMV-Other* tab contains the DMV registration counts and assumed annual mileage used to calculate VMT for "Other" vehicle tax classes: Commercial Trucks and Buses (commercial vehicles that do not pay WMT), Tow Trucks, Farm Vehicles, Charitable Non-Profit, and State and Local Government (E-Plate). DMV registrations data are processed to

Veh_Class	Fuel	Weight_Class	Registrations	Fuel_Cat.	Weight Class
	0	8,001	1	Diesel	1
	0	12,001	1	Diesel	12001
	0	14,001	1	Diesel	14001
	0	18,001	1	Diesel	18001
	0	20,001	1	Diesel	20001
	1	1	10	Gas	1
	1	4,001	6	Gas	1
	1	6,001	30	Gas	1
	1	8,001	177	Gas	1
	1	10,001	249	Gas	10001
	1	12,001	242	Gas	12001
	1	14,001	223	Gas	14001
	1	16,001	94	Gas	16001
	1	18,001	103	Gas	18001
	1	20,001	88	Gas	20001
	1	22,001	74	Gas	22001

SQL Code: select tax_class, fuel, weight_class, count(plate) as vehicles from dmv_registrations where not expired and

Assumptions about annual miles per registration:

Weight Class	Commercial Trucks & buses	Tow Truck	Farm	Charitable Non Profit	State & Local
1	-	15,000	3,000	10,000	13,000
10001	11,000	15,000	3,000	10,000	12,000
12001	10,000	15,000	3,000	10,000	12,000
14001	9,000	15,000	3,000	10,000	12,000
16001	8,000	15,000	3,000	10,000	12,000
18001	8,000	15,000	3,000	10,000	12,000
20001	8,000	15,000	3,300	10,000	12,000
22001	8,000	15,000	3,300	10,000	12,000
24001	8,000	15,000	3,300	10,000	12,000
26001		15,000	3,300	10,000	11,000
28001		15,000	3,300	10,000	11,000
30001		15,000	3,300	10,000	11,000
32001		15,000	3,300	10,000	11,000
34001		15,000	3,300	10,000	11,000

Weight Class	Gas Commercial 8-26	Diesel & Other Commercial 8-26	Gas Tow Trucks	Diesel & Other Tow Trucks	Gas Farm	Diesel & Other Farm	Gas CN	Diesel & Other CN	Gas SLG	Diesel & Other SLG	School Bus (Gas)	Scho (Die
	T	T	TW	TW	F	F	CN	CN	E	E	SC	S
	Gas	Diesel	Gas	Diesel	Gas	Diesel	Gas	Diesel	Gas	Diesel	Gas	Die
1	1645	1017	163	351	2154	422	101	30	40530	14497	1399	
10,001	2905	2571	42	87	396	275	114	76	29	27	0	
12,001	1076	1534	22	96	299	169	60	44	26	12	1	
14,001	1392	3675	31	177	515	300	151	94	29	30	0	
16,001	604	2111	19	107	349	293	24	19	5	17	0	
18,001	577	2021	19	145	669	391	19	23	3	24	0	
20,001	200	574	9	23	269	191	16	19	1	9	0	
22,001	391	879	5	66	572	327	15	30	4	9	0	
24,001	1390	6461	42	596	1159	1010	37	90	9	33	0	
26,001	9	33	0	0	334	242	10	46	2	3	0	
28,001	8	27	0	0	479	307	3	19	0	37	0	
30,001	3	27	0	0	322	284	6	19	2	41	0	
32,001	4	15	0	0	104	259	1	24	2	27	0	
34,001	1	24	0	0	69	115	0	14	0	29	0	

produce a summary table of registrations by vehicle class, weight class, and fuel type for each class listed above. The vehicle registrations are multiplied by assumed annual miles per vehicle to estimate the total VMT by weight class for each tax class in the *Intermediate Base VMT* tab. The summary table of DMV registrations data from the DMV SQL query should be pasted into the left-most table of yellow-shaded cells on the *DMV-Other* tab. Fuel

type (gas or diesel) and weight class variables are calculated in the columns to the right of the pasted DMV registrations data.

The annual miles per vehicle assumptions for each vehicle class are in the yellow-shaded cells in the center table on the tab. The annual miles per vehicle for basic commercial trucks is set to zero because these VMT should be captured in the basic VMT calculated from the basic vehicle VMT control total. Commercial basic vehicles include hearses, ambulances, and other commercial vehicles, which register as commercial vehicles. Because these vehicles also pay fuel use tax, their VMT is included in the basic vehicle VMT estimate from the revenue forecast.

Vehicle registrations at vehicle weights greater than 200,001 pounds are data entry errors and are excluded from the VMT calculations. Commercial trucks and buses should only be registered at weights below 26,001 pounds. Assumed annual mileage for commercial trucks and buses over 26,000 pounds is left empty so that any vehicles incorrectly registered at 26,001 pounds or higher are not assigned VMT.

MotorHomes

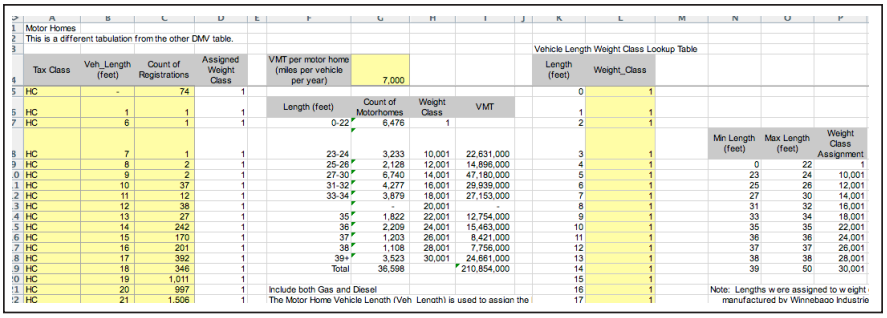

Motor Homes
This is a different tabulation from the other DMV table.

Tax Class	Veh_Length (feet)	Count of Registrations	Assigned Weight Class
HC	-	74	1
HC	1	1	1
HC	6	1	1
HC	7	1	1
HC	8	2	1
HC	9	2	1
HC	10	37	1
HC	11	12	1
HC	12	38	1
HC	13	27	1
HC	14	242	1
HC	15	170	1
HC	16	201	1
HC	17	392	1
HC	18	346	1
HC	19	1,011	1
HC	20	997	1
HC	21	1,506	1

VMT per motor home (miles per vehicle per year): 7,000

Length (feet)	Count of Motorhomes	Weight Class	VMT
0-22	6,476	1	
23-24	3,233	10,001	22,631,000
25-26	2,128	12,001	14,896,000
27-30	6,740	14,001	47,180,000
31-32	4,277	16,001	29,939,000
33-34	3,879	18,001	27,153,000
		20,001	
35	1,822	22,001	12,754,000
36	2,209	24,001	15,463,000
37	1,203	26,001	8,421,000
38	1,108	28,001	7,756,000
39+	3,523	30,001	24,661,000
Total	36,598		210,854,000

Include both Gas and Diesel
The Motor Home Vehicle Length (Veh_Length) is used to assign the

Vehicle Length Weight Class Lookup Table

Length (feet)	Weight_Class
0	1
1	1
2	1
3	1
4	1
5	1
6	1
7	1
8	1
9	1
10	1
11	1
12	1
13	1
14	1
15	1
16	1
17	1

Min Length (feet)	Max Length (feet)	Weight Class Assignment
0	22	1
23	24	10,001
25	26	12,001
27	30	14,001
31	32	16,001
33	34	18,001
35	35	22,001
36	36	24,001
37	37	26,001
38	38	28,001
39	50	30,001

Note: Lengths were assigned to weight
manufactured by Winnebago Industrie

Motor home VMT is estimated using motor home vehicle counts from the DMV registrations data and an assumed annual VMT of 7,000 per vehicle. The summary table of DMV registrations for motor homes (plate designated as HC) is pasted into the yellow-shaded cells on the left side of the *MotorHomes* tab. The annual VMT per vehicle assumption is the yellow-shaded single cell at the top center of the *MotorHomes* tab.

Because motor home vehicle weight information is not available from the DMV registrations data for motor homes, the vehicle length (feet) field is used to assign the motor home weight classes. Information on manufacturer motor home vehicle specifications was used to develop a table of motor home weight classes by vehicle lengths. The assumed weight class and vehicle length categories are assumptions in the yellow-shaded cells in a table on the right-hand side of the *MotorHomes* tab.

SchoolBus

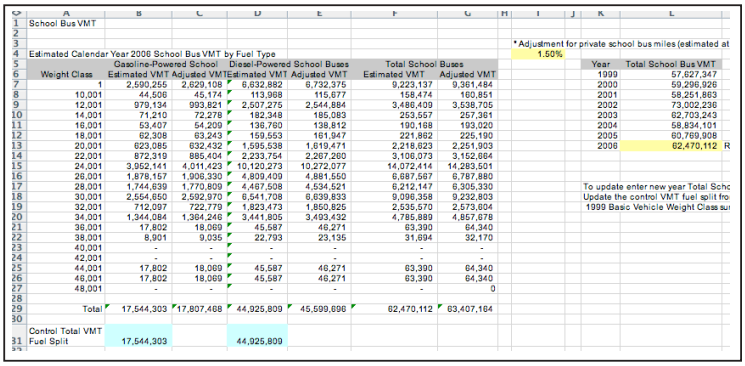

School Bus VMT

Estimated Calendar Year 2006 School Bus VMT by Fuel Type

Weight Class	Gasoline-Powered School Estimated VMT	Gasoline-Powered School Adjusted VMT	Diesel-Powered School Buses Estimated VMT	Diesel-Powered School Buses Adjusted VMT	Total School Buses Estimated VMT	Total School Buses Adjusted VMT
1	2,590,255	2,629,108	6,932,882	6,732,375	9,223,137	9,361,484
10,001	44,506	45,174	113,968	115,677	158,474	160,851
12,001	979,134	993,821	2,507,275	2,544,884	3,486,409	3,538,705
14,001	71,210	72,278	182,348	185,083	253,557	257,361
16,001	53,407	54,209	136,760	138,812	190,168	193,020
18,001	62,308	63,243	159,553	161,947	221,862	225,190
20,001	623,085	632,432	1,595,538	1,619,471	2,218,623	2,251,903
22,001	872,319	885,404	2,233,754	2,267,260	3,106,073	3,152,664
24,001	3,952,141	4,011,423	10,120,273	10,272,077	14,072,414	14,283,501
26,001	1,878,157	1,906,330	4,809,409	4,881,550	6,687,567	6,787,880
28,001	1,744,639	1,770,809	4,467,508	4,534,521	6,212,147	6,305,330
30,001	2,554,650	2,592,970	6,541,708	6,639,833	9,096,358	9,232,803
32,001	712,097	722,779	1,823,473	1,850,825	2,535,570	2,573,604
34,001	1,344,084	1,364,246	3,441,805	3,493,432	4,785,889	4,857,678
36,001	17,802	18,069	45,587	46,271	63,390	64,340
38,001	8,901	9,035	22,793	23,135	31,694	32,170
40,001	-	-	-	-	-	-
42,001	-	-	-	-	-	-
44,001	17,802	18,069	45,587	46,271	63,390	64,340
46,001	17,802	18,069	45,587	46,271	63,390	64,340
48,001	-	-	-	-	-	0
Total	17,544,303	17,807,468	44,925,809	45,599,696	62,470,112	63,407,164

Control Total VMT	
Fuel Split	17,544,303
	44,925,809

* Adjustment for private school bus miles (estimated at
1.50%

Year	Total School Bus VMT
1999	57,627,347
2000	59,296,926
2001	58,251,863
2002	73,002,236
2003	62,703,243
2004	58,834,101
2005	60,769,908
2006	62,470,112 R

To update enter new year Total Scho
Update the control VMT fuel split fro
1999 Basic Vehicle Weight Class su

The *SchoolBus* tab contains the estimates of school bus VMT in Oregon. School bus VMT by weight class and fuel type from 1999 is the base VMT distribution for the school bus VMT estimates. The Department of Education (DOE) estimate of total school bus VMT for 2006 is used as the control total for updating the VMT. The 2006 school bus VMT is distributed across weight classes using the school bus VMT distribution from 1999. School bus registrations by fuel type (gasoline or diesel) from the *DMV-Other* tab is applied to the 2006 school bus VMT to

determine the fuel-type split for the school bus VMT. The control total VMT by weight class are also adjusted by an assumed percent to account for private school bus miles not included in the DOE estimated school bus VMT.

Transit

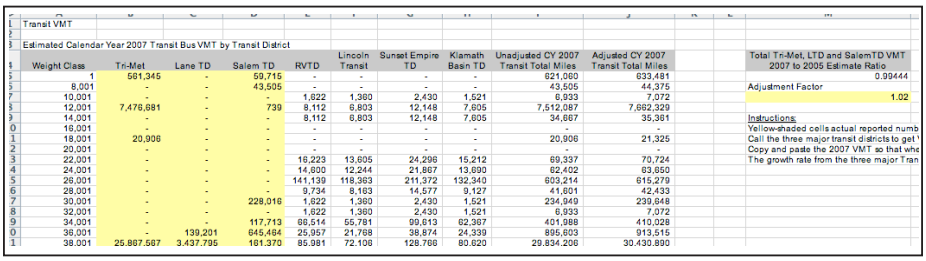

Transit VMT

Estimated Calendar Year 2007 Transit Bus VMT by Transit District

Weight Class	Tri-Met	Lane TD	Salem TD	RVTD	Lincoln Transit	Sunset Empire TD	Klamath Basin TD	Unadjusted CY 2007 Transit Total Miles	Adjusted CY 2007 Transit Total Miles
1	581,345	-	59,715	-	-	-	-	621,060	633,481
8,001	-	-	43,505	-	-	-	-	43,505	44,375
10,001	-	-	-	1,622	1,360	2,430	1,521	6,933	7,072
12,001	7,476,681	-	739	8,112	6,803	12,148	7,605	7,512,087	7,662,329
14,001	-	-	-	8,112	6,803	12,148	7,605	34,667	35,361
16,001	-	-	-	-	-	-	-	-	-
18,001	20,906	-	-	-	-	-	-	20,906	21,325
20,001	-	-	-	-	-	-	-	-	-
22,001	-	-	-	16,223	13,605	24,296	15,212	69,337	70,724
24,001	-	-	-	14,600	12,244	21,867	13,690	62,402	63,650
26,001	-	-	-	141,139	118,363	211,372	132,340	603,214	615,279
28,001	-	-	-	9,734	8,163	14,577	9,127	41,601	42,433
30,001	-	-	228,016	1,622	1,360	2,430	1,521	234,949	239,648
32,001	-	-	-	1,622	1,360	2,430	1,521	6,933	7,072
34,001	-	-	117,713	68,514	55,781	99,613	62,367	401,988	410,028
36,001	-	139,201	645,464	25,957	21,768	38,874	24,339	895,603	913,515
38,001	25,867,587	3,437,795	161,370	85,981	72,108	128,766	80,620	29,834,206	30,430,890

Total Tri-Met, LTD and SalemTD VMT 2007 to 2005 Estimate Ratio	
	0.99444
Adjustment Factor	
	1.02

Instructions:
Yellow-shaded cells actual reported numb
Call the three major transit districts to get
Copy and paste the 2007 VMT so that whe
The growth rate from the three major Tran

The *Transit* tab estimates transit bus VMT in Oregon. Transit VMT estimates developed in 2005 are updated by scaling the transit district VMT by the change in the VMT for the three largest transit districts in Oregon. To update this tab, the transit bus VMT by weight class for Tri-Met, Lane Transit District, and Salem Transit District are collected for the base year (yellow-shaded input cells). The change in VMT for these three transit districts is used to adjust the 2005 transit VMT estimates. A final adjustment factor is used to adjust the transit VMT reported by the seven transit districts. The adjustment factor is in a yellow-shaded cell to the right of the base-year table. The adjustment factor is an artifact from the original 2005 transit VMT calculations provided by ODOT.

Federal

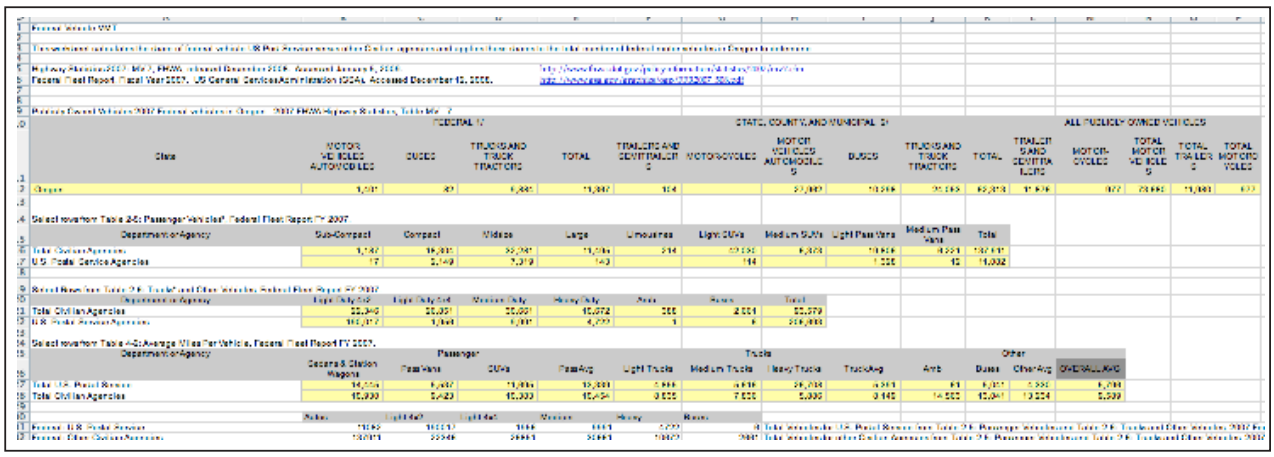

Paste the indicated table rows from the FHWA *Highway Statistics* (Table MV-7) and the GSA *Federal Fleet Report* into the yellow-shaded cells on the *Federal* tab. The input data on the *Federal* tab are used with the Federal Spread Weights to calculate the federal VMT in the *Federal Summary* tab. It is important that the input data are pasted into the exact cells as indicated by the row and column headings because the cells are referenced in the VMT calculations at the bottom of the *Federal* tab. The calculations at the bottom of the tab aggregate the various reported vehicle types and classes to calculate total federal VMT for buses, medium heavy trucks, and heavy trucks.

Fed Weight Class Spread

The *Federal* tab contains federal VMT and number of federal vehicles. The *Fed Weight Class Spread* tab uses the share of VMT for school buses (*SchoolBus* tab) and transit buses (*Transit* tab) by weight classes to spread the federal bus VMT across vehicle weight classes. Similarly, the State and Local Government (SLG) VMT (final estimates calculated in the *Intermediate Base VMT* tab) are used to spread the federal heavy vehicle VMT across

weight classes. This tab essentially creates the shares or weights for each weight class, which are then applied to the federal VMT input from the *Federal* tab.

All of the calculations on this tab are linked to other tabs in the Base VMT workbook. The analyst can check that the shares are properly calculated and applied to the federal VMT such that the total federal VMT is still equal to the VMT on the *Federal* tab.

	A	B	C	D	E	F	G	H	I	J	K	L	M	N
1	Spread Federal VMT across Weight Classes using the Distribution of Bus and SLG VMT													
2	Weight Class	Gas School Buses	Diesel School Buses	Diesel Transit Buses	Bus Total	Bus Percent (Bus Weight)	Spread Federal Buses	Gas SLG	Diesel & Other SLG	SLG Totals	SLG Medium Percent	SLG Heavy Percent	Spread Federal Trucks	SLG Gas Percent
3	1	2,629,108	6,732,375	677,856	10,039,340	0.0947	101093.3	565,929,000	188,461,000	754,390,000			0	0.75
4	10,001	45,174	115,677	7,072	167,923	0.0016	1690.933	336,000	324,000	660,000	0.364238		3589873	0.51
5	12,001	993,821	2,544,884	7,662,329	11,201,034	0.1056	112791.3	312,000	144,000	456,000	0.251656		2480276	0.68
6	14,001	72,278	185,083	35,361	292,722	0.0028	2947.624	336,000	360,000	696,000	0.384106		3785685	0.48
7	16,001	54,209	138,812	0	193,020	0.0018	1943.661	60,000	204,000	264,000		0.060426	379651.1	0.23
8	18,001	63,243	161,947	21,325	246,514	0.0023	2482.328	36,000	288,000	324,000		0.074159	465935.4	0.11
9	20,001	632,432	1,619,471	0	2,251,903	0.0212	22676.03	12,000	108,000	120,000		0.027466	172568.7	0.10
10	22,001	885,404	2,267,260	70,724	3,223,388	0.0304	32458.62	48,000	108,000	156,000		0.035706	224339.3	0.31
11	24,001	4,011,423	10,272,077	63,650	14,347,150	0.1353	144471.8	108,000	636,000	744,000		0.170291	1069926	0.15
12	26,001	1,906,330	4,881,550	615,279	7,403,159	0.0698	74547.73	22,000	33,000	55,000		0.012589	79093.98	0.40
13	28,001	1,770,809	4,534,521	42,433	6,347,762	0.0599	63920.18	0	407,000	407,000		0.093156	585295.4	0.00
14	30,001	2,592,970	6,639,833	239,648	9,472,451	0.0893	95384.92	22,000	451,000	473,000		0.108263	680208.2	0.05
15	32,001	722,779	1,850,825	7,072	2,580,676	0.0243	25986.68	22,000	297,000	319,000		0.073014	458745.1	0.07
16	34,001	1,364,246	3,493,432	410,028	5,267,706	0.0497	53044.32	0	308,000	308,000		0.070497	442926.3	0.00
17	36,001	18,069	46,271	913,515	977,855	0.0092	9846.729	44,000	660,000	704,000		0.161135	1012403	0.06
18	38,001	9,035	23,135	30,430,890	30,463,060	0.2873	306754.5	11,000	11,000	22,000		0.005035	31637.59	0.50
19	40,001	0	0	0	0	0.0000	0	11,000	22,000	33,000		0.007553	47456.39	0.33
20	42,001	0	0	1,252,127	1,252,127	0.0118	12608.56	33,000	22,000	55,000		0.012589	79093.98	0.60

Federal Summary

The *Federal Summary* tab sums the federal VMT by weight class from the *Federal* tab and the *Fed Weight Class Spread* tab. Federal VMT for basic vehicles is the sum of the basic VMT from the *Federal* tab and the federal bus VMT from the *Fed Weight Class Spread* tab. Federal VMT for vehicles 10,001 pounds and above are the federal bus and truck VMT from the *Fed Weight Class Spread* tab. Federal Gas VMT is derived by applying the percent gasoline from the SLG vehicles to the Federal VMT; Federal Diesel VMT is total Federal VMT less Federal Gas VMT.

	A	B	C	D
1	Federal VMT Summary for Gas and Diesel Vehicles			
2				
3	Weight Class	Federal VMT	Federal Gas	Federal Diesel
4	1	60,497,247	45,383,882	15,113,365
5	10,001	3,591,564	1,828,433	1,763,132
6	12,001	2,593,068	1,774,204	818,863
7	14,001	3,788,632	1,828,995	1,959,637
8	16,001	381,595	86,726	294,869
9	18,001	468,418	52,046	416,371
10	20,001	195,245	19,524	175,720
11	22,001	256,798	79,015	177,783
12	24,001	1,214,398	176,284	1,038,114
13	26,001	153,642	61,457	92,185
14	28,001	649,216	0	649,216
15	30,001	775,593	36,074	739,519
16	32,001	484,732	33,430	451,302
17	34,001	495,971	0	495,971
18	36,001	1,022,250	63,891	958,359

Intermediate Base VMT

The *Intermediate Base VMT* tab consolidates all of the vehicle tax class VMT from the individual vehicle class tabs. The *Intermediate Base VMT* tab is so named because this tab contains the raw VMT numbers prior to the control total adjustment for the basic and medium-heavy vehicle weight classes. The *Intermediate Base VMT* tab references each tab in the workbook. For most of the vehicle classes, this tab links the vehicle VMT by weight class into the correct column for the final format of the *Base VMT (no WMTEvasion)* tab. The VMT per year and the annual vehicle registrations

are multiplied in this worksheet for the "Other" vehicle classes from the *DMV-Other* tab.

	AD	AE	AF	AG	AH	AI	AJ	AK
	Difference							
	(33,738,194,704)							
8	(118,208,606)	18%	1.22					
		Kavanaugh's Forecast (FSB-Method Estimation of Statewide VMT-Forecasts CY2008-2010) (10/8/08)						
		Light Vehicles	Medium Heavy	Heavy	Total			
	2007 Preliminary	34,579,899,291	646,317,978	1,959,608,476	37,185,825,745			
			0					

The VMT estimates for the base year from the ODOT Transportation and Revenue forecast are pasted into the yellow-shaded cells to the right of the VMT table on the *Intermediate Base VMT* tab. The VMT estimates for the base year are the control totals for the basic vehicle and medium-heavy vehicle classes. The VMT for the tax classes calculated separately (transit, school bus, etc.) are subtracted from the light-vehicle control total to determine the Private Passenger basic VMT. The medium-heavy vehicle VMT are scaled such that the total medium-heavy vehicle VMT equals the control total. The *Intermediate Base VMT* tab and the *Base VMT (no WMTEvasion)* tab both reference these control totals and use the medium vehicle control total to calculate the scaling factor used to adjust the medium-heavy VMT for each vehicle tax class.

Base VMT (no WMTEvasion)

The *Base VMT (no WMTEvasion)* tab is the final worksheet in the Base VMT workbook and is linked to the *Base VMT* worksheet in the HCAS model. The tab contains the calculated base-year VMT for each vehicle tax class by weight class and adjusts the basic and medium-heavy VMT so that the total for these two weight groupings equals their corresponding VMT forecast from the ODOT Economic and Revenue Forecast (for the base year). The "No WMTEvasion" in the tab name is to indicate that the WMT VMT reflect the WMT VMT reported in the WMT Collection Reports. WMT VMT are adjusted to include the assumed WMT evasion rate in the *Base VMT* tab in the HCAS Model workbook.

	M	N	O	P	Q	R	S
1	WMT Vehicles 80+ 6 Axle	WMT Vehicles 80+ 7 Axle	WMT Vehicles 80+ 8 Axle	WMT Vehicles 80+ 9+ Axle	Gas Farm	Diesel & Other Farm	Gas CN
3	0	0	0	0	6,462,000	1,266,000	1,010
4	0	0	0	0	2,151,499	1,009,663	1,395
5	0	0	0	0	1,061,064	616,812	734
6	0	0	0	0	1,890,823	1,211,595	1,847
7	0	0	0	0	1,281,354	1,075,750	293
8	0	0	0	0	2,452,562	2,133,142	220
9	0	0	0	0	1,152,239	818,133	195
10	0	0	0	0	2,450,115	1,400,678	183
11	0	0	0	0	4,960,197	4,339,102	452
81	0	0	0	0	0	0	
82	0	0	0	0	0	0	
83	0	0	0	0	0	0	
84	0	0	0	0	0	0	
85	0	0	0	0	0	0	
86	0	0	0	0	0	0	
87	0	0	0	0	0	0	
88	0	0	0	0	0	0	
89	0	0	0	0	0	0	
90	0	0	0	0	0	0	
91	0	0	0	0	0	0	
92	0	0	0	0	0	0	
93	0	0	0	0	0	0	
94	0	0	0	0	0	0	
95	0	0	0	0	0	0	
96	0	0	0	0	0	0	
97	0	0	0	0	0	0	
98	0	0	0	0	0	0	
99	0	0	0	0	0	0	
100	61,257,514	158,742,780	166,420,285	3,549,052			
101							

The basic vehicle VMT for cars is equal to the basic vehicle control total minus the VMT reported for the other vehicle tax classes on the *Intermediate Base VMT* tab.

The medium-heavy control total adjustment factor is applied to the VMT for medium-heavy vehicle classes (vehicles between 10,001 and 26,000 pounds) from the *Intermediate Base VMT* tab. VMT for vehicles in the 26,001-pound weight class and above are equal to the VMT in the *Intermediate Base VMT* tab. The references and calculations on this tab are automatically updated or calculated when the rest of the tabs in the workbook are changed.

Once the Base VMT workbook has been completely updated and reviewed, the user should update the linked *Base VMT* tab in the HCAS Model workbook by opening the workbook and updating the links.

Split PE and ROW Workbook

The Split PE and ROW workbook calculates the split of the Preliminary Engineering (PE) and Right-of-Way (ROW) costs between modernization and preservation projects in order to determine the cost allocator shares for the PE and ROW work types on the *Policy* tab in the HCAS model.

Split Non-Construction

The *Split Non-Construction* tab determines the shares to assign for the allocation of PE and ROW costs. The updated state- and federal-funded PE and ROW non-project costs from the *Non-Project Costs* tab in the HCAS model should be pasted into the yellow-shaded cells on this tab. The state-funded PE (ROW) amount should be the sum of the state- and bond-funded PE (ROW) work type from the *Non-Project Costs* tab. The blue-shaded cells on this tab are automatically updated from the *Proj Costs Mod and Pres* tab.

The orange-shaded cells at the bottom of the tab are the shares of PE and ROW costs that are allocated to modernization and preservation projects. The shares for PE (work type 1) and ROW (work type 2) should be pasted into the appropriate "Shares" for work types 1 and 2 on the *Policy* tab in the HCAS Model workbook once all of the tabs in the Split PE and ROW workbook are updated.

Category	State	Federal	Total	%State	
PE	47,800,072	93,856,167	141,456,239	33.65%	Nor
ROW	74,414,127	47,471,883	121,886,010	61.05%	Nor
MOD	178,311,686	290,689,242	469,000,927	38.02%	
PRES	326,521,784	467,597,085	794,118,869	41.12%	
CONST	504,833,470	758,286,326	1,263,119,796	39.97%	
TOTAL	626,847,669	899,614,376	1,526,462,045	41.07%	

Before Studded Tires	State	Federal	Total	%State
PE-MOD	17,674,078	34,849,133	52,523,211	33.65%
ROW-MOD	26,283,734	18,198,358	44,482,091	59.09%
CONST-MOD	178,311,686	290,689,242	469,000,927	38.02%
TOTAL-MOD	222,269,497	343,736,732	566,006,229	39.27%
PE-PRES	29,925,994	59,007,034	88,933,028	33.65%
ROW-PRES	48,130,393	29,273,525	77,403,919	62.18%
CONST-PRES	326,521,784	467,597,085	794,118,869	41.12%
TOTAL-PRES	404,578,171	555,877,645	960,455,816	42.12%
TOTAL	626,847,669	899,614,376	1,526,462,045	41.07%
% of PE that is Mod	37.13%	37.13%	37.13%	
% of PE that is Pres	62.87%	62.87%	62.87%	
% of ROW that is Mod	35.32%	38.34%	36.49%	
% of ROW that is Pres	64.68%	61.66%	63.51%	
% of Mod that is PE	7.95%	10.14%	9.28%	
% of Pres that is PE	7.40%	10.62%	9.26%	
% of Mod that is ROW	11.83%	5.29%	7.86%	
% of Pres that is ROW	11.90%	5.27%	8.06%	

After Studded Tires	State	Federal	Total	%State	
PE-MOD	17,674,078	34,849,133	52,523,211	33.65%	
ROW-MOD	26,283,734	18,198,358	44,482,091	59.09%	
CONST-MOD	178,311,686	290,689,242	469,000,927	38.02%	
TOTAL-MOD	222,269,497	343,736,732	566,006,229	39.27%	
PE-PRES	29,478,131	58,123,953	87,602,083	33.65%	
ROW-PRES	48,130,393	29,273,525	77,403,919	62.18%	
CONST-PRES	325,182,273	455,893,848	781,075,921	41.63%	
TOTAL-PRES	402,790,797	543,291,126	946,081,924	42.57%	
TOTAL	625,060,295	887,027,858	1,512,088,153	41.34%	
% of PE that is Mod	37.48%	37.48%	37.48%	Share 1 for PE	
% of PE that is Pres	62.52%	62.52%	62.52%	Share 2 for PE	
% of ROW that is Mod	35.32%	38.34%	36.49%	Share 1 for ROW	
% of ROW that is Pres	64.68%	61.66%	63.51%	Share 2 for ROW	
% of Mod that is PE	7.95%	10.14%	9.28%		
% of Pres that is PE	7.32%	10.70%	9.26%		
% of Mod that is ROW	11.83%	5.29%	7.86%		
% of Pres that is ROW	11.95%	5.39%	8.18%		

Proj Costs Mod and Pres

Paste the input from the *Project Costs* tab into the yellow-shaded cells on the *Proj Costs Mod and Pres* tab. The project costs data are used to determine the share of preservation and modernization project expenditures by funding source on the *Split Non-Construction* tab.

Funding	Worktype	Functional Class	Bridge Type	Expenditure	Key Number
bond	68	0	3	27475266.42	14259
bond	14	0	3	25978671.16	15228
bond	68	0	3	23913866.86	14032
federal	15	0	0	19459227.36	14494
federal	26	0	0	18035602.04	14684
bond	14	0	3	18013332.01	14610
federal	48	0	0	13511361.25	12754
federal	48	0	0	13494703.5	12753
state	48	0	0	12357833	13890
state	48	0	0	12357833	13891
federal	33	0	0	12000000	15110
federal	68	0	3	11350030.25	14949
bond	15	0	0	11329769	14049
federal	11	0	3	11181458.09	12692
bond	14	0	3	10944221.88	14031
bond	14	0	3	10712663	14043
federal	11	0	0	10597354.94	15740
federal	20	0	0	10428133	13933
federal	5	0	0	10193597.9	13981

Instructions:
Paste in the Project cost from HCAS Model workbook Pro

WORK TYPE	WORK CATEGORY	federal	state	bond
1	PE	0	0	
2	ROW	0	0	
3	modernization	542600.079	398047.502	
4	modernization	0	0	
5	modernization	32939121.3	10638493.8	10644
6	modernization	0	0	
7	modernization	0	0	
8	modernization	0	0	
9	modernization	66227988.8	12851575.8	10197
10	preservation	0	0	
11	preservation	241135244	48777236.1	15971
12	preservation	0	0	
13	bridge-mod	218433.169	152624.728	12108
14	bridge-pres	88609893.1	12423318.4	1610
15	bridge-pres	81040280.4	10958353.5	65930
16	modernization	544116.008	55889.4088	29888
17	modernization	1790899.31	204976.44	
18	modernization	0	0	
19	bridge-mod	15077225.4	5082438.71	68560

Studded Tires

The *Studded Tires* tab contains the studded-tire-related cost breakdown used to adjust the preservation and modernization project costs for the PE and ROW split. Data from the *Studded Tires in Oregon* study are used to adjust the preservation and modernization costs for studded tire damage. No user input is necessarily required on this tab, but the funding shares and amounts can be adjusted if new data or information are available (yellow-shaded cells).

Studded Tires Adjustment for PE and ROW Split			
Studded Tire Damage	14,373,893		From Ta
Engineering %	9.26%		Base Life
Construction %	90.74%		
Construction $	13,042,948		
Engineering $	1,330,945		Year
			2001
Engineering % State	33.65%		2002
State Engineering $	447,863		2003
Fed Engineering $	883,082		2004
			2005
% State	10.27%		
State Construction $	1,339,511		
Fed Construction $	11,703,437		*Studde
			Table 5.
			Base C
State $	1,787,374		life E
Fed $	12,586,518		1995
			1996

Tab-by-Tab Explanation of HCAS Model

This section provides a tab-by-tab explanation of the tabs in the HCAS model. Following the tab-by-tab explanation of the input tabs are descriptions of how to recalculate the model and audit the model output, and then a tab-by-tab explanation of the intermediate output tabs and the result tabs.

After updating the data and assumptions in the input tabs, check that the named ranges in the HCAS Model workbook are defined to include the full range of input data. To view and change a named range, go to the *Insert* menu, *Name*, *Define*, select the named range, and review and change (if necessary) the *Refers to* cell references.

Excel Macros must be enabled to recalculate the model. To enable Excel Macros, a message should appear when opening the Excel workbook asking whether to open with macros enabled. If this message does not appear, or it is unclear whether macros are enabled, in the Excel workbook, go to *Tools*, *Options*, click the *Security* tab, and under *Macro Security*, select *Medium* and click *Okay*. Exit Excel and open the HCAS model. The next time the Model workbook is opened the enable macro message should appear.

Control

The *Control* tab contains the "Recalculate" button, which will run the HCAS model. The "Recalculate" button calls the Excel VBA Module (macro), which captures the input data from the HCAS Model workbook and then calls the HCASModule (Python) to perform the Model calculations.

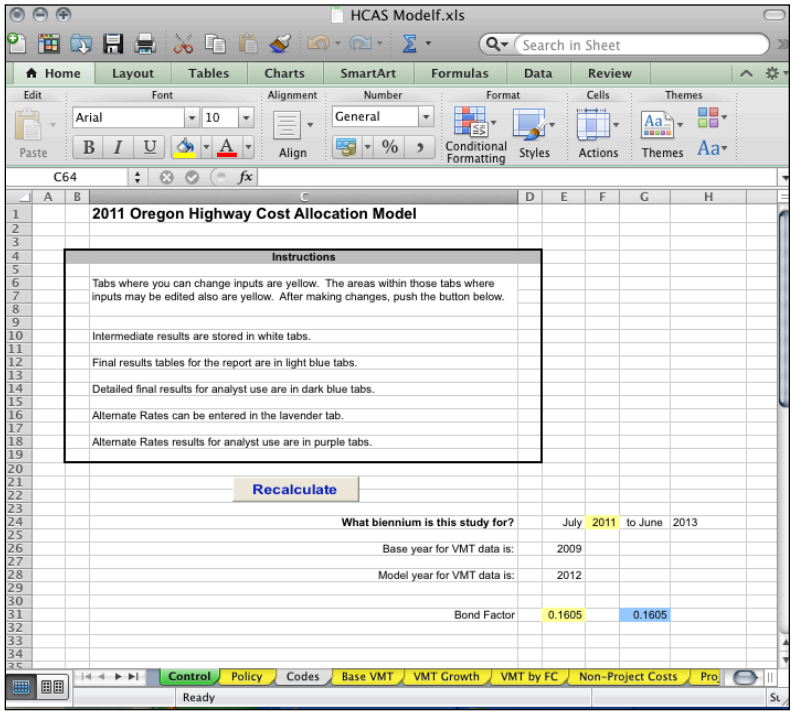

Enter the biennium study period and the bond factor in the *Control* tab.

To update the study biennium, enter the first year of the biennium in the yellow-shaded cell following the question *"What biennium is this study for?"* The biennium start year should be the calendar year for the first year of the biennium.

Enter the bond factor in the yellow-shaded cell next to the bond factor label. The bond factor can be calculated by using Excel's PMT function in the blue-shaded cell and then pasting into the yellow-shaded bond factor cell. The bond factor should be the share of payments on bond expenditures in this biennium paid in this biennium.

The Excel PMT function calculates the bond loan payment based on the assumptions of constant repayment periods and a constant interest rate. In the 2013 HCAS and previous studies, the bond factor has been calculated using a repayment period of 20 years and an interest rate of 5 percent. The bond factor is used in the model to calculate the portion of bond expenditures allocated to the current study.

Codes

The *Codes* tab contains the lookup codes with their descriptive names for the project Work Type, Facility Class, and Available Bridge Types (top three tables) and the Summary Work Types and Summary Weight Classes (below the Work Types and Facility Class tables). The Summary Work Types and the Summary Weight Class lookup tables are used by the model to aggregate the costs to allocate and allocated costs in the intermediate output tables.

	A	B	C	D	E	F
1						
2		Available Work Type Codes			Available Facility Class Codes	
3	Work Type	Work Type Description		Facility Class	Functional Class	Ownership
4	1	Preliminary and Construction Engineering (and etc.)		-4	All Urban	Any
5	2	Right of Way (and Utilities)		-3	All Rural	Any
6	3	Grading and Drainage		-2	Any	Local
7	4	New Pavements-Rigid		-1	Any	Any
8	5	New Pavements-Flexible		0	Any	State
9	6	New Shoulders-Rigid		1	1-Rural Interstate	1-State
10	7	New Shoulders-Flexible		2	2-Rural Other Principal Arterial	1-State
11	8	Pavement and Shoulder Reconstruction-Rigid		3	6-Rural Minor Arterial	1-State
12	9	Pavement and Shoulder Reconstruction-Flexible		4	7-Rural Major Collector	1-State
13	10	Pavement and Shoulder Rehab-Rigid		5	8-Rural Minor Collector	1-State
14	11	Pavement and Shoulder Rehab-Flexible		6	9-Rural Local	1-State
15	12	Pavement and Shoulder Rehab-Other		7	11-Urban Interstate	1-State
16	13	New Structures		8	12-Urban Other Freeway	1-State
17	14	Replacement Structures		9	14-Urban Other Principal Arterial	1-State
18	15	Structures Rehabilitation		10	16-Urban Minor Arterial	1-State
19	16	Climbing Lanes		11	17-Urban Collector	1-State
20	17	Truck Weight/Inspection Facilities		12	19-Urban Local	1-State
21	18	Truck Escape Ramps		13	1-Rural Interstate	2-County
22	19	Interchanges		14	2-Rural Other Principal Arterial	2-County
23	20	Roadside Improvements		15	6-Rural Minor Arterial	2-County
24	21	Safety Improvements		16	7-Rural Major Collector	2-County
25	22	Traffic Service Improvements		17	8-Rural Minor Collector	2-County
26	23	Other Construction (modernization)		18	9-Rural Local	2-County
27	24	Other Construction (preservation)		19	11-Urban Interstate	2-County
28	25	Surface and Shoulder Maintenance-Rigid		20	12-Urban Other Freeway	2-County

The user should refer to the tables in the *Codes* tab to look up the description corresponding to a numeric code and also to determine the valid range of codes for the work types, facility classes, or bridge types in the user input tabs.

Policy

The *Policy* tab contains the allocator or allocators applied to each work type. The user may change the yellow-shaded cells in the work type-allocator table for the allocator name and the allocator share for each work type. Available allocators are listed to the right of the main table. Note that all allocators must be entered exactly as shown (spaces, spelling, etc.) for the model to function properly; the user should copy and paste allocator names into the yellow-shaded allocator name columns to avoid errors.

	A	B	C	D	E	F	G
1							
2							
3		Work Type	Work Type Description	Allocator 1	Share 1	Allocator 2	Share 2
4		1	Preliminary and Construction Engineering (and etc.)	Congested PCE	37.5%	Other Construction	62.5%
5		2	Right of Way (and Utilities)	Congested PCE	35.3%	Other Construction	64.7%
6		3	Grading and Drainage	Congested PCE	100.0%		0.0%
7		4	New Pavements-Rigid	Congested PCE	6.9%	Rigid Pave	93.1%
8		5	New Pavements-Flexible	Congested PCE	4.5%	Flex Pave	95.5%
9		6	New Shoulders-Rigid	Congested PCE	100.0%		0.0%
10		7	New Shoulders-Flexible	Congested PCE	100.0%		0.0%
11		8	Pavement and Shoulder Reconstruction-Rigid	Congested PCE	26.9%	Rigid Pave	73.08%
12		9	Pavement and Shoulder Reconstruction-Flexible	Congested PCE	24.5%	Flex Pave	75.54%
13		10	Pavement and Shoulder Rehab-Rigid	All VMT	26.9%	Rigid Pave	73.08%
14		11	Pavement and Shoulder Rehab-Flexible	All VMT	24.5%	Flex Pave	75.54%
15		12	Pavement and Shoulder Rehab-Other	All VMT	100.0%		0.0%
16		13	New Structures	None-Bridge Split	100.0%		0.0%
17		14	Replacement Structures	None-Bridge Split	100.0%		0.0%
18		15	Structures Rehabilitation	None-Bridge Split	100.0%		0.0%
19		16	Climbing Lanes	Uphill PCE	100.0%		0.0%
20		17	Truck Weight/Inspection Facilities	Over 26 VMT	100.0%		0.0%
21		18	Truck Escape Ramps	Over 26 VMT	100.0%		0.0%
22		19	Interchanges	None-Bridge Split	100.0%		0.0%
23		20	Roadside Improvements	All VMT	100.0%		0.0%
24		21	Safety Improvements	Congested PCE	100.0%		0.0%
25		22	Traffic Service Improvements	Congested PCE	100.0%		0.0%
26		23	Other Construction (modernization)	Other Construction	100.0%		0.0%
27		24	Other Construction (preservation)	All VMT	100.0%		0.0%
28		25	Surface and Shoulder Maintenance-Rigid	All VMT	26.9%	Rigid Pave	73.1%
29		26	Surface and Shoulder Maintenance-Flexible	All VMT	24.5%	Flex Pave	75.5%
30		27	Surface and Shoulder Maintenance-Other	All AMT	100.0%		0.0%
31		28	Drainage Facilities Maintenance	All VMT	100.0%		0.0%
32		29	Structures Maintenance	All VMT	100.0%		0.0%

The user can enter the allocator share (a percent value between 0 and 100 percent) for the first allocator; the percentage for a second allocator is automatically calculated as 100 percent minus the percentage for the first allocator. Do not change this; the allocator percentages must add to exactly 100 percent.

The Preliminary and Construction Engineering and Right of Way allocators are updated using the calculations from the supplemental Split PE and ROW workbook. Pavement work type allocators are from the pavement factors developed by RD Mingo and Associates.

Base VMT

The *Base VMT* tab contains the base year VMT by weight class and vehicle tax class. The *Base VMT* tab is linked to the Base VMT supplemental workbook. Once the Base VMT workbook has been updated, update the linked data when prompted when opening the HCAS Model workbook. The linked data can also be updated by going to the *Edit* menu, choosing *Links*, and then clicking *Update Values* for the Base VMT workbook link.

The WMT evasion factor[4] adjusts the WMT VMT to account for the additional VMT not reported for WMT payments. The WMT VMT evasion factor is applied to the VMT for WMT vehicle classes in this tab. The WMT evasion rate is a user-specified assumption located on the *Revenue* tab.

The base VMT are used in the HCAS model to calculate the model year VMT. The VMT are used to allocate costs and attribute revenues by vehicle tax and weight class.

Oregon Transportation Economic and Revenue Forecast
Table 1. FSB-Method Estimation of Statewide VMT - Forecasts CY2008-2010
Dec-08

	Year	Light Vehicles /1	Annual % Change	Med Heavy /2	Annual % Change	Heavy /3	Annual % Change	Total	Annual % Change
	2003	33,975,350,270	-	578,634,515	-	1,833,137,935	-	36,087,122,720	-
	2004	33,828,433,633	0.45%	602,321,904	4.1%	1,885,148,472	2.84%	36,315,904,009	0.6%
	2005	34,288,770,342	1.36%	615,515,525	2.2%	1,983,676,146	5.23%	36,887,962,012	1.6%
	2006	34,717,242,807	1.25%	632,405,067	2.3%	2,006,490,550	1.15%	37,353,575,732	1.3%
Base Year:	**2007**	**34,579,899,291**	**-0.40%**	**646,317,978**	**2.2%**	**1,959,608,476**	**-2.34%**	**37,185,825,745**	**-0.4%**
	2008	34,476,159,593	-0.30%	643,086,388	-0.50%	1,957,648,867	-0.10%	37,076,894,849	-0.3%
	2009	33,372,922,486	-3.20%	675,240,707	5.00%	1,846,062,882	-5.70%	35,894,226,076	-3.2%
Forecast Year:	**2010**	**34,207,245,548**	**2.50%**	**692,121,725**	**2.5%**	**1,942,058,152**	**5.20%**	**36,841,425,425**	**2.6%**

Based on taxable motor fuels consumption
2 Based on a new prototype framework for medium heavy vehicle stock and fuel consumption
3 Based on HUS for 2007.

VMT Growth

The VMT growth rates are calculated from the change in VMT from the base year to the forecast year in the ODOT Economic and Revenue Forecast. To update the growth rates, paste the ODOT Economic and Revenue Forecast VMT into the yellow-shaded cells under the table titled "Oregon Transportation Economic and Revenue Forecast" so that the base year and forecast year match the Base Year and Forecast Year row names to the left of the year column. The compound VMT growth rates are automatically calculated for light, medium-heavy, and heavy vehicle classes below the VMT forecast table. In the middle of the tab, the *Target Growth Rates* for the three vehicle class groups are automatically set to the new compound growth rates.

On the far left-hand side of the tab, the VMT growth rates by weight class for the basic and medium vehicle classes are set equal to their calculated compound vehicle class growth rates.

Also on the far left-hand side of the tab, the heavy vehicle growth rates in the yellow-shaded cells should be adjusted such that the total heavy vehicle VMT growth rate matches the target VMT growth rate, but variation still exists across the weight classes within the heavy vehicles. In past studies an expert from ODOT familiar with heavy vehicles in Oregon has made adjustments to the VMT growth rates for the heavy vehicles (vehicles 26,001 pounds and up). Small modifications in the VMT growth rates for the weight classes from 78,001 and 104,001 pounds will have the greatest impact on the total heavy vehicle group VMT growth rate since a majority of the heavy vehicle VMT are in these two weight classes.

	A	B	C	D	E	F
1	Weight Class	Growth Rate		VMT Growth Rates by Weight Class		
2	1	-0.36%				
3	10,001	2.31%				
4	12,001	2.31%		Target rate		Group average rate
5	14,001	2.31%		-0.36%	basic	-0.36%
6	16,001	2.31%		2.31%	medium	2.31%
7	18,001	2.31%		-0.30%	heavy	-0.30%
8	20,001	2.31%				
9	22,001	2.31%				
10	24,001	2.31%				
11	26,001	-9.600%				
12	28,001	-6.600%				
13	30,001	-2.000%				
14	32,001	2.100%				
15	34,001	-3.800%				
16	36,001	-7.600%				
17	38,001	-4.350%				
18	40,001	-4.350%				
19	42,001	-13.000%				
20	44,001	-7.650%				
21	46,001	-1.650%				
22	48,001	-1.650%				
23	50,001	-0.400%				
24	52,001	1.200%				
25	54,001	3.300%				
26	56,001	3.050%				
27	58,001	0.500%				
28	60,001	1.200%				
29	62,001	-1.800%				
30	64,001	0.900%				
31	66,001	-5.650%				
32	68,001	0.500%				
33	70,001	2.300%				
34	72,001	-2.100%				

Because the group-adjusted growth rates are calculated using the base-year VMT, the heavy vehicle class growth rates should not be adjusted until the Base VMT workbook has been completely updated and the HCAS Model workbook link to the Base VMT workbook data has been updated.

The VMT growth rates by weight class are applied to the base VMT data to calculate the model-year VMT.

[4] WMT evasion factor is calculated as one divided by one minus the WMT evasion percent (1/(1-WMT Evasion).

VMT by FC

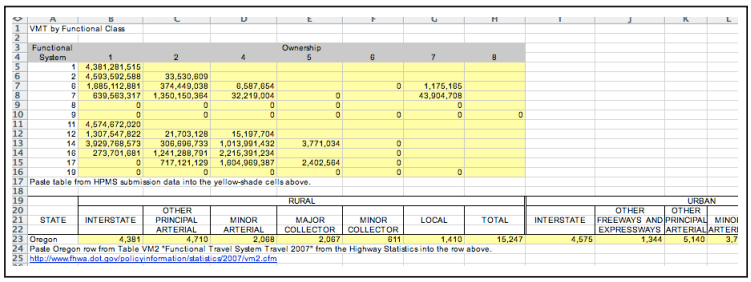

VMT by Functional Class												
Functional System	Ownership 1	2	4	5	6	7	8					
1	4,381,281,515											
2	4,593,592,588	33,530,809										
6	1,085,112,881	374,449,038	6,587,654		0	1,175,165						
7	939,563,317	1,350,150,364	32,219,004	0		43,904,708						
8	0	0	0	0		0						
9	0	0	0	0	0	0	0					
11	4,574,672,020											
12	1,307,547,822	21,703,128	15,197,704									
14	3,929,768,573	306,696,733	1,013,991,432	3,771,034	0							
16	273,701,681	1,241,288,791	2,215,391,234		0							
17	0	717,121,129	1,804,969,387	2,402,564	0							
19	0	0	0	0	0	0						
Paste table from HPMS submission data into the yellow-shade cells above.												
	RURAL							URBAN				
STATE	INTERSTATE	OTHER PRINCIPAL ARTERIAL	MINOR ARTERIAL	MAJOR COLLECTOR	MINOR COLLECTOR	LOCAL	TOTAL	INTERSTATE	OTHER FREEWAYS AND EXPRESSWAYS	OTHER PRINCIPAL ARTERIAL	MINOI ARTERI	
Oregon	4,381	4,710	2,088	2,087	511	1,410	15,247	4,575	1,344	5,140	3,7	
Paste Oregon row from Table VM2 "Functional Travel System Travel 2007" from the Highway Statistics into the row above.												
http://www.fhwa.dot.gov/policyinformation/statistics/2007/vm2.cfm												

The *VMT by FC* tab calculates VMT by functional system and ownership, which is used in the model with the *Base VMT* and *VMT Growth* input to produce the output in the *Master VMT* tab.

Two data sources are used to update the input on this tab: Oregon's Highway Performance Monitoring System (HPMS) submission data and data from the annual Federal Highway Administration (FHWA) *Highway Statistics* report.

The Oregon HPMS submission data corresponding to the base year are pre-processed outside of the HCAS model. The summary table of VMT by functional system and ownership is pasted into the yellow-shaded cells in the table at the top of the *VMT by FC* tab.

The second data source needed to update the *VMT by FC* tab is the Oregon information from the FHWA *Highway Statistics* Report Table VM-2. Paste the Oregon row from Table VM-2 into the yellow-shaded cells in the middle row of the tab.

The input data are combined into a single table of VMT by functional system and ownership at the bottom right of the tab. This table is then used to create the column of VMT by facility class located at the bottom left of the tab.

Non-Project Costs

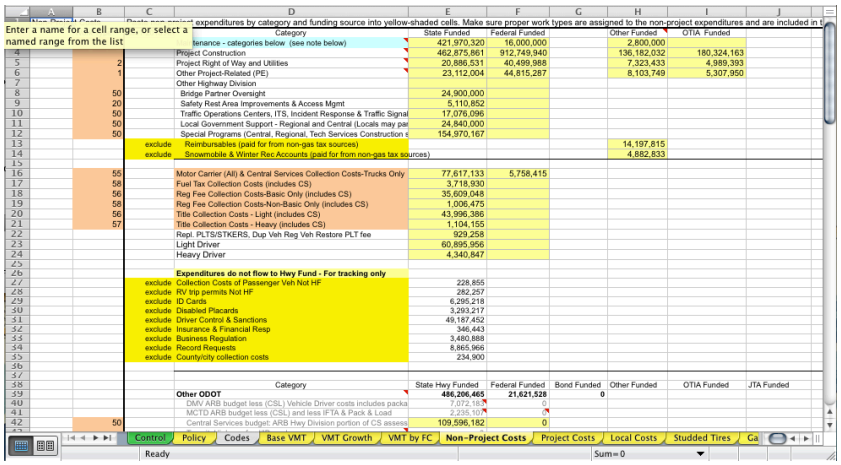

Enter a name for a cell range, or select a										
named range from the list										
			Category	State Funded	Federal Funded		Other Funded	OTIA Funded		
			tenance - categories below (see note below)	421,970,320	16,000,000		2,800,000			
			Project Construction	462,875,861	912,749,940		136,182,032	180,324,163		
	2		Project Right of Way and Utilities	20,886,531	40,499,988		7,323,433	4,989,393		
	1		Other Project-Related (PE)	23,112,004	44,815,287		8,103,749	5,307,950		
			Other Highway Division							
	50		Bridge Partner Oversight	24,900,000						
	20		Safety Rest Area Improvements & Access Mgmt	5,110,852						
	50		Traffic Operations Centers, ITS, Incident Response & Traffic Signal	17,076,096						
	50		Local Government Support - Regional and Central (Locals may par	24,840,000						
	50		Special Programs (Central, Regional, Tech Services Construction	154,970,167						
		exclude	Reimbursables (paid for from non-gas tax sources)				14,197,815			
		exclude	Snowmobile & Winter Rec Accounts (paid for from non-gas tax sources)				4,882,833			
	55		Motor Carrier (All) & Central Services Collection Costs-Trucks Only	77,617,133	5,758,415					
	58		Fuel Tax Collection Costs (includes CS)	3,718,930						
	56		Reg Fee Collection Costs-Basic Only (includes CS)	35,609,048						
	58		Reg Fee Collection Costs-Non-Basic Only (includes CS)	1,006,475						
	56		Title Collection Costs - Light (includes CS)	43,996,386						
	57		Title Collection Costs - Heavy (includes CS)	1,104,155						
			Repl. PLTS/STKERS, Dup Veh Reg Veh Restore PLT fee	929,258						
			Light Driver	60,895,956						
			Heavy Driver	4,340,847						
			Expenditures do not flow to Hwy Fund - For tracking only							
		exclude	Collection Costs of Passenger Veh Not HF	228,855						
		exclude	RV trip permits Not HF	282,257						
		exclude	ID Cards	6,295,218						
		exclude	Disabled Placards	3,293,217						
		exclude	Driver Control & Sanctions	49,187,452						
		exclude	Insurance & Financial Resp	346,443						
		exclude	Business Regulation	3,480,888						
		exclude	Record Requests	8,865,966						
		exclude	County/city collection costs	234,900						
			Category	State Hwy Funded	Federal Funded	Bond Funded	Other Funded	OTIA Funded	JTA Funded	
			Other ODOT	**486,206,465**	**21,621,528**	**0**				
			DMV ARB budget less (CSL) Vehicle Driver costs includes packa	7,072,18	0					
			MCTD ARB budget less (CSL) and less IFTA & Pack & Load	2,235,10	0					
	50		Central Services budget: ARB Hwy Division portion of CS assess	109,596,182	0					

The *Non-Project Costs* tab contains the administrative and non-project-related costs by funding source. The non-project costs are allocated to the vehicle weight classes in the model cost allocation calculations. The *Non-Project Costs* tab includes the DMV and Motor Carrier collection costs, ROW costs, and PE costs. Non-project maintenance costs are broken out by their specific maintenance work category. The data for the *Non-Project Costs* tab are based on ODOT's proposed budget. ODOT staff complete a worksheet with the same format as the yellow-shaded tables of the *Non-Project Costs* tab. When pasting the data into the yellow-shaded cells, it is important that the row and column headings match exactly because the non-project cost entries at the bottom of the tab are referenced by work type to the input data.

Project Costs

The *Project Costs* tab contains the project costs for the biennium, which are allocated to vehicle classes in the cost allocation procedure in the model.

Project expenditures are broken out by their funding source, work type, and bridge type (if applicable). Only one functional system is assigned to the project, but the project may

have up to four funding sources (federal, state, local, bond), three work types (see work type codes on the *Codes* tab), and three bridge types, which correspond to the work types (bridge types are also listed on the *Codes* tab). Thus, a single project may be listed multiple times in the *Project Costs* tab, once for each possible funding source, work type, and bridge type combination. The user can change the *Project Costs* input data by pasting project expenditures into the yellow-shaded cells. The model ignores entries in the Memo column and stops reading data at the first empty row, so be sure eliminate spaces between entries.

	A	B	C	D	E	F
1	Funding	Work Type	Functional Class	Bridge Type	Dollars	Key Number
2	other	15	0	0	18,691	16284
3	federal	15	0	0	163,304	16284
4	other	29	0	0	3,902	16283
5	federal	29	0	0	34,094	16283
6	other	29	0	0	5,134	16282
7	federal	29	0	0	44,861	16282
8	state	5	0	0	866,291	16272
9	other	5	0	0	8,759,165	16272
10	state	11	0	0	142,588	16271
11	state	9	0	0	91	16008
12	federal	9	0	0	1,082	16008
13	other	23	0	0	4,821	16006
14	federal	23	0	0	40,375	16006
15	state	44	0	0	38,156	16005
16	federal	44	0	0	333,374	16005
17	state	22	0	0	244,079	16004
18	state	46	0	0	679,223	16003
19	federal	46	0	0	5,934,441	16003
20	state	14	0	3	84,144	15970
21	federal	14	0	3	735,178	15970
22	federal	21	0	0	257,467	15969
23	other	15	0	0	25,469	15968
24	federal	15	0	0	222,527	15968
25	state	11	0	0	815,285	15964
26	federal	11	0	0	9,663,724	15964
27	state	15	0	0	89,836	15874
28	federal	15	0	0	784,904	15874
29	state	15	0	0	73,085	15846
30	federal	15	0	0	638,551	15846
31	state	11	0	3	90,799	15845
32	federal	11	0	3	793,316	15845
33	state	11	0	3	204,092	15843
34	federal	11	0	3	1,783,168	15843
35	state	44	0	0	217,004	15842
36	federal	44	0	0	1,895,986	15842
37	state	11	0	0	38,747	15841
38	federal	11	0	0	321,062	15841

Local Costs

The *Local Costs* tab contains the local agency expenditures by project work type, facility class, and bridge type. The Local Roads and Streets Survey (LRSS) receipts and disbursements data are used to update the *Local Costs* tab. The LRSS data should be pasted in the yellow-shaded cells on the *Local Costs* tab. Make sure that the LRSS data are pasted into the correct rows because the calculations refer to specific cells for the different expenditure types.

Once the LRSS data are pasted into the *Local Costs* tab, calculations are performed to remove the non-fungible local revenue sources from the expenditures and then sum the remaining expenditures by HCAS work type. The *Local Cost* tab calculations automatically update the local costs table at the bottom of the *Local Costs* tab.

	A	B	C	D	E	F	G	H	I	J	K	L	M	N
1	LRSS Receipts and Disbursements Worksheet													
2														
3	RECEIPTS FOR ROAD AND STREET PURPOSES								DISBURSEMENTS FOR ROAD AND STREET PURPOSES					
4				ITEM		TOTAL RECEIPTS					ITEM			DISBURSEMENT AMOUNT
5	A. RECEIPTS FROM LOCAL SOURCES								A. LOCAL DISBURSEMENTS (Identify by footnote the application of private contributions)					
6		1. Special Assessments								1.	Capital Projects - Construction, Expansion and Preservation			
7			a. Permanent Property Tax or Assessment			12,797,909					a. Right-of-way			
8			b. Limited Duration Property Tax or Assessment			1,558,936					b. Project engineering			61,848,792
9			c. Traffic impact fees or system development charges			69,336,043					c. Construction			
10			d. Transportation Utility Fees			9,565,963				-1	New Facilities			31,867,666
11			e. Local Improvement Districts (or similar)			37,214,253				-2	Capacity Improvements			155,105,914
12			f. Urban Renewal District			4,856,298				-3	Bicycle and Pedestrian Paths			8,740,274
13										-4	System Preservation			106,188,788
14		2. General Fund and Non-Dedicated City/County Fund Transfers				63,087,781				-5	System Enhancement			61,921,393
15														
16		3. Local Option Road User Fees (Include only what you actually keep)								2.	Operations and Maintenance			

Studded Tires

The *Studded Tire* tab contains the state and local studded tire-related expenditures.

The top right table on the *Studded Tire* tab contains the state studded tire costs from the 2005, 2007, 2009, and 2011 studies. Issue Paper 5 from the 2005 study explains the studded tire cost approach developed for that study. The 2005 HCAS studded tire costs have been updated in subsequent studies by adjusting the studded tire costs for inflation (the general increase in the cost of the preservation work) and the increase in studded tire damage, which is approximated using the basic-vehicle VMT growth rate.

	A	B	C	D	E	F	G	H
1	Funding	Work Type	Facility Class	Dollars		2005	2007	2009
2	state	1	0	1,042,877		900,000	990,138	1,042,877
3	state	11	0	17,381,281		15,000,000	16,502,298	17,381,281
4	state	26	0	3,512,762		3,000,000	3,335,119	3,512,762
5	local-state	101	-2	114,716		18,900,000	20,827,555	21,936,920
6	local-state	111	-2	1,911,941				
7	local-state	126	-2	386,404				
8						Speed-Adjusted Local to State Basic VMT or		
9						11.00%		
10								
11						Preservation Inflation Rate		
12						3%		
13								
14								

The inflation rate is a user-specified assumption in a yellow-shaded cell labeled *Preservation Inflation Rate*. Past studies have assumed a three percent inflation rate. The basic-vehicle VMT growth rate from the *VMT Growth* tab is automatically applied to the previous study's studded tire costs along with the inflation rate.

Local studded tire costs are estimated from the state studded tire costs using the share of basic VMT on local roads compared to basic VMT on state roads. The Speed-Adjusted Local to State Basic VMT on Urban Principal Arterials is applied to the state studded tire expenditures to calculate the local expenditures for each studded tire-related work type.

The speed-adjusted local to state basic VMT should not change much between studies. If the user chooses to update this assumption, the *VMT Master* tab containing the VMT by functional class and ownership by weight class can be used to update this assumption.

Gas and Diesel

The *Gas and Diesel* tab uses the VMT from the *Base VMT* tab and the *VMT Growth* tab rates to determine VMT in the model year for gas and diesel vehicles. The VMT and user-specified assumptions are used to determine the implied gallons and implied MPG for basic and non-basic vehicle classes. These estimates are then used to derive the percent of basic VMT by diesel-powered vehicles, an input in the *Revenues* tab.

	A	B	C	D	E	F	G
1	Gas and Diesel						
2							
3	VMT from Model	Gas	Diesel	Unknown	Total	Not Taxed	Taxed
4	Basic	617,135,911	215,497,962	2,254,589,594	34,207,245,548	308,292,795	33,898,952,
5	Non-Basic	169,318,508	397,108,738	33,374,611,675	2,821,016,840	2,094,773,265	726,243,
6	All	786,454,419	612,606,700	35,629,201,269	37,028,262,388	2,403,066,060	34,625,196,
7							
8							
9	Revenue Control	$ 425,589,239					
10							
11		Assumptions					
12	Percent of taxed gallons that are diesel			9.47%			
13	Percent of basic gallons that are diesel			6.75%			
14	Percent of RV gallons that are diesel			40.00%			
15	Percent of taxed gallons that are basic			96.00%	95.89%	Assuming twice the MPG for	
16							
17	Implied Gallons	Gas	Diesel	Total		Instructions	
18	Basic	1,587,447,860	114,909,094	1,702,356,954		1. This worksheet calculates	
19	Non-Basic	17,910,214	53,021,326	70,931,540		2. The Revenue Control is u	
20	All	1,605,358,073	167,930,420	1,773,288,494		Revenue Control is automati	
21						3. Adjust yellow highlighted	
22	Implied MPG	Gas	Diesel	Total			
23	Basic			19.91			
24	Non-Basic	18.12	7.58	10.24			
25	All			19.53			
26							
27	Implied Shares	Gas	Diesel	Total			
28	Basic	0.8952	0.0648	0.9600			
29	Non-Basic	0.0101	0.0299	0.0400			
30	All	0.9053	0.0947	1.0000			
31							
32	Percent of basic VMT by diesel-powered vehicles			0.0675			
33							

Below the VMT table is Revenue Control, which is average annual gas and diesel tax revenues. Gas tax revenues and diesel tax revenues from the *Revenues* tab are added and divided by two to calculate the average annual revenue. Revenue Control is divided by the gas/diesel tax rate per gallon to calculate the total implied gallons.

Percent of taxed gallons that are diesel, the first entry in the Assumptions table, is calculated from the gas and diesel tax revenues from the *Revenues* tab. Diesel tax revenues are divided by total gas and diesel tax revenues to derive the percent of fuel tax revenues from diesel fuel.

Once the base VMT, VMT growth rates, and revenue totals have been updated, adjust the yellow-shaded assumptions until the green-highlighted implied MPG are reasonable for their corresponding vehicle class. Reasonable MPG is about 20 for basic vehicles and about 10 for non-basic vehicles, with the gas MPG higher than the diesel MPG.

The yellow-shaded assumptions are: percent of basic gallons that are diesel, percent of RV gallons that are diesel, and percent of taxed gallons that are basic. The user should adjust these assumptions using the values specified in the previous study as starting points.

- The percent of basic gallons that are diesel should be entered as a percent; a reasonable value would be within the range of 5 to 8 percent.
- The percent of RV gallons that are diesel should be entered as a percent. A reasonable range for this assumption would be between 30 and 60 percent.
- The percent of taxed gallons that are basic is entered as a percent, and should be roughly equal to the taxed basic VMT divided by total taxed VMT plus total taxed non-basic VMT (assume basic vehicles have roughly twice the fuel efficiency of non-basic vehicles).

The ranges for each of these user-specified rates are only guidelines; the objective should be reasonable MPG estimates.

The percent of basic VMT by diesel-powered vehicles, the bottom line on the tab, adjusts as the implied shares for gas and diesel-powered vehicles changes. The percent of basic VMT by diesel-powered vehicles is referenced by the *Revenues* tab and is used to attribute fuel tax revenues.

Bridge Splits

The *Bridge Splits* tab contains the split of the bridge costs for the incremental allocation of bridge project expenditures. The available bridge types and the bridge reclassification work types are listed on the *Codes* tab.

Work types 60 through 65 are designated bridge reclassification codes for splitting the bridge project expenditures. Expenditures entered for bridge projects work types (work types 13, 14, 15, 16, 19, or 68) in the *Project Costs* tab are reclassified using their bridge type and work type into work types 60 through 65. This bridge splits are used by the model for the incremental bridge cost allocation approach used in the study. The user can adjust the share for each bridge type and work type, such that the sum of the shares by bridge type equals one.

	A	B	C
	Bridge Type	Work Type	Share
2	0	60	0.6098
3	0	61	0.2878
4	0	62	0.0333
5	0	63	0.0691
5	0	64	0
7	1	60	0.6098
3	1	61	0.2878
9	1	62	0.0333
0	1	63	0.0691
1	1	64	0
2	2	60	0.6176
3	2	61	0.2909
4	2	62	0.0136
5	2	63	0.0779
6	2	64	0
7	3	60	0.4324
8	3	61	0.2213
9	3	62	0.0565
0	3	63	0.2898
1	3	64	0
2	4	60	0.7962
3	4	61	0.0752
4	4	62	0.0875
5	4	63	0.0411
6	4	64	0
7			

Rev Forecast

The ODOT Revenue Forecast (total revenue dollars) by revenue source for the study period should be pasted into the yellow-shaded cells on the *Rev Forecast* tab. The ODOT Revenue Forecast is provided by the Financial and Economics Analysis Unit of the ODOT Financial Services Branch. Make sure the row and column headings in the tab correspond to the new data when pasting the new revenue forecast into the yellow-shaded cells because the revenues by revenue sources will automatically calculate the revenue control totals in the top left of the *Revenues* tab.

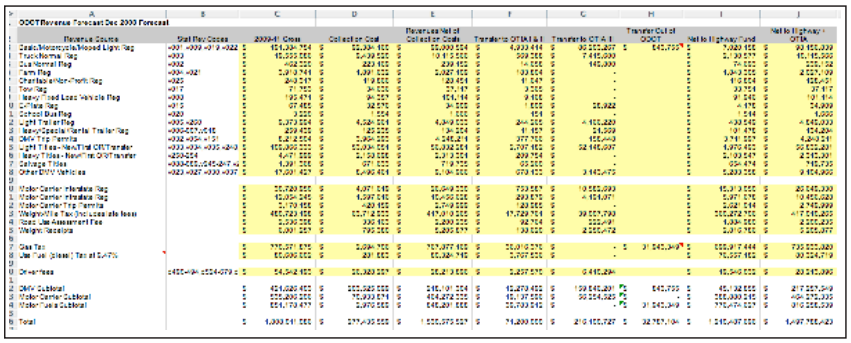

Revenues

The *Revenues* tab contains three different sets of input used in the revenue attribution calculations: revenue control totals, evasion rates, and the revenue instrument rates (tax rates and fees).

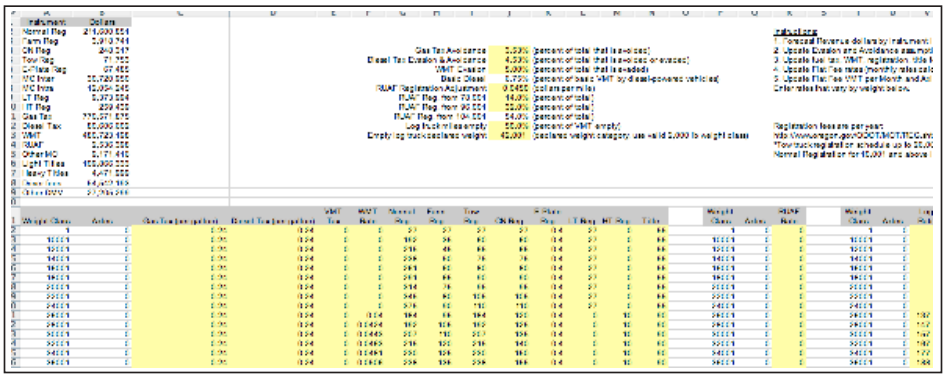

The revenue control totals, at the top left of the *Revenues* tab, are updated by the data on the *Rev Forecast* tab. The revenue control totals are used to attribute revenues to the vehicle classes. The Registration Fee revenues and the Other MC revenue totals are set equal to the control totals in the revenue attribution calculations, while the other revenue instrument revenue totals are calculated using the revenue rates and VMT calculations. Driver Fees and Other DMV revenues are displayed

on the *Revenues* tab but are not included in the HCAS model because revenue from these sources do not go into the State Highway Fund (i.e., the named range *RevenueTotals* should not include the last two cells of the revenue control input).

	A	B
1	Instrument	Dollars
2	Normal Reg	211,600,851
3	Farm Reg	3,918,741
4	CN Reg	248,317
5	Tow Reg	71,753
6	E-Plate Reg	67,485
7	MC Inter	30,720,950
8	MC Intra	12,054,245
9	LT Reg	9,373,994
10	HT Reg	259,439
11	Gas Tax	770,571,875
12	Diesel Tax	80,606,602
13	WMT	480,723,198
14	RUAF	2,536,398
15	Other MC	9,171,416
16	Light Titles	109,866,333
17	Heavy Titles	4,471,999
18	Driver fees	54,542,193
19	Other DMV	27,205,299

The evasion assumptions, located in the center of the top portion of the *Revenues* tab, are the user-specified assumptions for the gas, diesel, and WMT avoidance or evasion rates; the percent of basic VMT by diesel-fueled vehicles (calculated in the *Gas and Diesel* tab); the RUAF registration revenue allocation; and empty log truck miles and weight.

The gas tax avoidance rate and the diesel tax avoidance/evasion rate are both expressed as the percent of total taxable VMT that avoids the gas tax by purchasing fuel out-of-state. The avoidance/evasion rates are applied to their respective gas and diesel VMT to calculate gas and diesel tax revenues. Change this assumption by entering a percentage in the yellow-shaded evasion cells.

Similarly, the WMT tax evasion rate is expressed as the percent of total WMT VMT that evades the WMT tax. The WMT evasion rate is applied to WMT vehicle class VMT to calculate WMT tax revenues. The WMT evasion rate is also used to adjust the WMT base VMT in the *Base VMT* tab because the base VMT data are calculated from the WMT tax collection reports. Change the WMT evasion rate by entering a percentage in the yellow-shaded WMT evasion cell.

Gas Tax Avoidance	3.53%	(percent of total that is avoided)
Diesel Tax Evasion & Avoidance	4.53%	(percent of total that is avoided or evaded)
WMT Evasion	5.00%	(percent of total that is evaded)
Basic Diesel	6.75%	(percent of basic VMT by diesel-powered vehicles)
RUAF Registration Adjustment	0.0450	(dollars per mile)
RUAF Reg. from 78,001	14.0%	(percent of total)
RUAF Reg. from 96,001	32.0%	(percent of total)
RUAF Reg. from 104,001	54.0%	(percent of total)
Log truck miles empty	50.0%	(percent of VMT empty)
Empty log truck declared weight	42,001	(declared weight category, use valid 2,000 lb weight class)

The Basic Diesel assumption is not a yellow-shaded assumption because this cell is linked to the calculated value in the *Gas and Diesel* tab. The percent of basic VMT by diesel-powered vehicles is used to split basic vehicle VMT into gasoline-powered VMT and diesel-powered VMT for the calculation of gasoline and diesel tax revenues.

RUAF vehicles are credited with a portion of the heavy vehicle registration revenues using the RUAF Reg assumptions. The first RUAF Reg assumption is the RUAF Reg adjustment in dollars per mile. This assumption is the registration revenue dollars per RUAF mile credited to the RUAF vehicles class. The next three RUAF Reg assumptions allocate the RUAF registration revenue across three RUAF vehicle weight groups by specifying the portion of RUAF vehicles, which register at three different registration weight classes. Since the total of these three assumptions must equal 100 percent, the percent of total for RUAF Reg. from 104,001 is calculated as 100 minus the values specified in RUAF Reg. from 78,001 and RUAF Reg. from 96,001. RUAF Reg. from 78,001 and RUAF Reg. from 104,001 must be entered as percentages in the yellow-shaded cells.

Two assumptions are used to adjust the log truck VMT for the "as if" WMT revenue calculations. The *Log truck miles empty* assumption specifies the percent of log truck VMT without a load (empty), and the *Empty log truck declared weight* is the weight class the empty log truck VMT are assigned (enter a valid HCAS vehicle weight class). Log truck VMT in the flat fee reports should be reported using the loaded weight. Since log haulers are allowed to use a lower declared weight when their trailer is empty and stowed above the tractor unit, the log truck VMT must be adjusted to take into account the empty VMT at the lower weight class for calculation of the as-if WMT tax revenues.

The tax and fee rates for the revenue instruments are located in the yellow-shaded cells at the bottom of the *Revenues* tab. Each of the revenue rates is used with its corresponding

vehicle tax class VMT to calculate or attribute revenues to the vehicle classes. The current law rates can be found in the Revised Oregon Statutes or obtained from ODOT publications.

- The gas and diesel tax rates are entered as dollars per gallon.
- The VMT tax, WMT tax, and RUAF are entered as dollars per mile. Oregon does not currently have a VMT tax so rates are entered as zero for this instrument. The WMT tax and RUAF will vary by weight class and should be entered following the WMT tables or by calculating the weight class rate using the mid-point weight for the weight class.
- Registration fees are entered as dollars per year. Take the two-year registration fee and divide by two to annualize the registration fee. The Normal Reg is the passenger vehicle registration fee for basic vehicles and the Heavy Vehicle Registration Fee table is for vehicles 10,001 pounds and greater.
- Public vehicles are required to pay a one-time registration fee of $2. The E-Plate Reg fee is set to $0.40 per year, using the assumption that each public vehicle has a 5-year service life ($2 registration fee divided by 5 years equals $0.40 per year).
- The title fee is entered as dollars per transaction. The light vehicle title fee is used for weight classes 24,001 pounds and under, and the heavy vehicle title fee is used for weight classes 26,001 pounds and greater.
- The annual flat fee rates per 100 pounds are converted to monthly rates for each weight class by dividing by 12 (months per year) and using the mid-point of the weight category to calculate the rate for the weight class. The flat fee monthly VMT and axle shares are tabulated in the Flat Fee VMT Axle workbook.

Alt Rates

The *Alt Rates* tab is described in the Alternative Rate Analysis User Guide in Section 6.

MPG

The *MPG* tab contains the MPG assumptions by declared weight class and the adjusted MPG by weight class.

	A	B	C	D	E
1					
2					
3	Declared	MPG		Weight Class	Adjusted MPG
4	1	20.00		1	19.58
5	10,001	10.85		10,001	8.31
6	12,001	10.27		12,001	7.86
7	14,001	9.77		14,001	7.48
8	16,001	9.33		16,001	7.14
9	18,001	8.94		18,001	6.85
10	20,001	8.59		20,001	6.58
11	22,001	8.27		22,001	6.34
12	24,001	7.98		24,001	6.11
13	26,001	7.15		26,001	7.15
14	28,001	7.04		28,001	7.04
15	30,001	6.94		30,001	6.94
16	32,001	6.85		32,001	6.85
17	34,001	6.76		34,001	6.76
18	36,001	6.67		36,001	6.67
19	38,001	6.59		38,001	6.59
20	40,001	6.52		40,001	6.52
21	42,001	6.45		42,001	6.45
22	44,001	6.38		44,001	6.38

The assumed MPG values in the yellow-shaded cells were derived from a regression analysis of the Vehicle Inventory and Use Statistics (VIUS) 2002 data (U.S. Census Bureau). VIUS data collection was discontinued after 2002. The MPG assumptions by weight class can be updated when better information or data on MPG by weight class become available; no standardized method for updating this tab has been developed.

The assumed MPG are used in the initial allocation of fuel tax revenues by weight class in the model. Gasoline and diesel fuel tax revenues are attributed separately because the model allows for different tax rates and different evasion/avoidance assumptions for the two fuel types. VMT by fuel type and weight class for fuel-tax paying vehicles are assembled and adjusted for evasion/avoidance. A preliminary attribution is made by dividing the adjusted VMT in each combination of weight class and fuel type by the assumed miles per gallon for that weight class from the *MPG* tab and multiplying the resulting number of gallons by the per-gallon rate for that fuel type. The attribution to vehicles between 10,001 and 26,000 pounds is then adjusted to bring those weight classes, as a group to equity (before considering subsidies). The revenue attributed to basic vehicles is adjusted so that the total revenue attributed equals the forecast revenues from the budget. The implied miles per

gallon after adjustment for each weight class is calculated and sent back to Excel where it may be examined for reasonableness. Adjusted MPG is also a set of MPG values (by weight class) adjusted to account for the wide variation in VMT for 10,000-26,000-pound vehicles. The reasons for using this approach are detailed in Issue Paper 6 of the 2007 HCAS.

Section 5: Recalculating the Model

To recalculate the model, go to the *Control* tab and click the "Recalculate" button. Make sure that the Excel workbook macros are enabled and that the HCASModule.py has been registered. See the Technical Documentation in Appendix E for instructions on how to register the HCASModule file.

Auditing

Recalculating the model should take a few seconds. Once the model results have been recalculated there are several checks that can be performed to audit the model calculations.

After the model has successfully recalculated, first review the model results to check that the VMT, cost allocation, and revenue attribution in the intermediate and results tabs are reasonable.

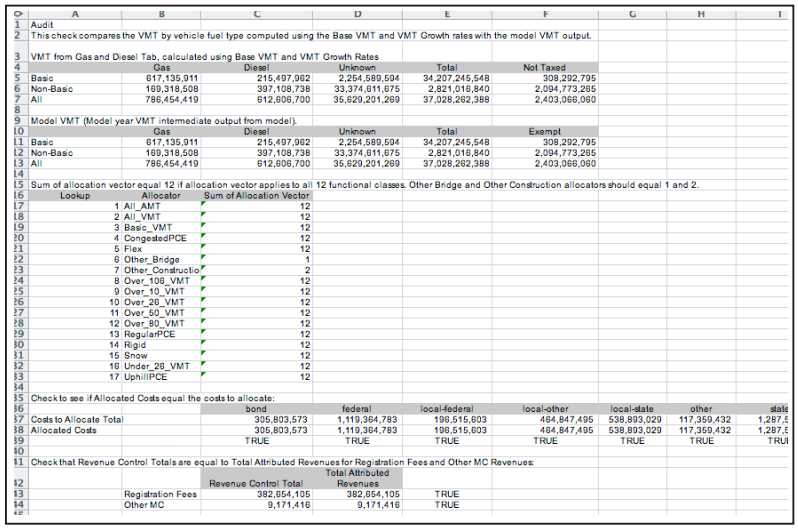

	A	B	C	D	E	F	G	H	I
1	Audit								
2	This check compares the VMT by vehicle fuel type computed using the Base VMT and VMT Growth rates with the model VMT output.								
3	VMT from Gas and Diesel Tab, calculated using Base VMT and VMT Growth Rates								
4		Gas	Diesel	Unknown	Total	Not Taxed			
5	Basic	617,135,011	215,497,962	2,254,589,594	34,207,245,548	308,292,795			
6	Non-Basic	169,318,508	397,108,738	33,374,611,675	2,821,016,840	2,094,773,265			
7	All	786,454,419	612,606,700	35,629,201,269	37,028,262,388	2,403,066,060			
8									
9	Model VMT (Model year VMT intermediate output from model).								
10		Gas	Diesel	Unknown	Total	Exempt			
11	Basic	617,135,011	215,497,962	2,254,589,594	34,207,245,548	308,292,795			
12	Non-Basic	169,318,508	397,108,738	33,374,611,675	2,821,016,840	2,094,773,265			
13	All	786,454,419	612,606,700	35,629,201,269	37,028,262,388	2,403,066,060			
14									
15	Sum of allocation vector equal 12 if allocation vector applies to all 12 functional classes. Other Bridge and Other Construction allocators should equal 1 and 2.								
16	Lookup	Allocator	Sum of Allocation Vector						
17	1	All_AMT	12						
18	2	All_VMT	12						
19	3	Basic_VMT	12						
20	4	CongestedPCE	12						
21	5	Flex	12						
22	6	Other_Bridge	1						
23	7	Other_Constructio	2						
24	8	Over_108_VMT	12						
25	9	Over_10_VMT	12						
26	10	Over_26_VMT	12						
27	11	Over_50_VMT	12						
28	12	Over_80_VMT	12						
29	13	RegularPCE	12						
30	14	Rigid	12						
31	15	Snow	12						
32	16	Under_26_VMT	12						
33	17	UphillPCE	12						
34									
35	Check to see if Allocated Costs equal the costs to allocate:								
36			bond	federal	local-federal	local-other	local-state	other	state
37	Costs to Allocate Total		305,803,573	1,119,364,783	196,515,603	464,847,495	538,893,029	117,359,432	1,287,5
38	Allocated Costs		305,803,573	1,119,364,783	196,515,603	464,847,495	538,893,029	117,359,432	1,287,5
39			TRUE	TRUE	TRUE	TRUE	TRUE	TRUE	TRUI
40									
41	Check that Revenue Control Totals are equal to Total Attributed Revenues for Registration Fees and Other MC Revenues:								
42			Revenue Control Total	Total Attributed Revenues					
43		Registration Fees	382,054,105	382,054,105	TRUE				
44		Other MC	9,171,416	9,171,416	TRUE				

The *Audit* tab has been added to the HCAS Model to facilitate the auditing of the input and model output data for the VMT, allocation vectors, and costs. See the description of the *Audit* tab in the tab-by-tab explanation of the Model output tabs.

When auditing the model input and output, the *Audit* tab allows for rounding errors. For example, the costs to allocate and allocated costs should be within a few dollars of each other. A discrepancy equal to the magnitude of biennial project expenditures would indicate that some of the costs to allocate (input) were not allocated in the model calculations. In this case, the user should review the project cost, non-project costs, and local costs to see that funding, work types, functional system, and bridge types were correctly entered.

The following are general checks that can be performed to audit the model output:

- Check that the Model VMT and Master VMT are consistent. Total Model VMT by weight class should equal the Master VMT for facility class zero (the facility class for any functional system, any owner).
- Check that the costs to allocate (the non-project costs, project costs, and local costs data entered into the model by the user) are equal to the allocated costs from the model. If costs to allocate are different from the allocated costs, go back to the non-project costs, project costs, and local costs tabs to check that all costs were entered with valid work types, funding sources, functional systems, and bridge types.
- Check the reasonableness of the adjusted MPG rates compared to the initial assumed MPG by weight class on the MPG tab.
- Check to see if any pavement factors are listed as missing by reviewing the missing_pavement_factors text file in the HCAS Model folder. If the

missing_pavement_factors file does have missing pavement factors listed, check the pavement factors input file.

- Attributed Revenues for Registration fees and Other MC in the Attributed Revenues tab should equal their control totals from the *Revenues* tab.

Basic Troubleshooting

If nothing happens after clicking "Recalculate," or if the Excel Visual Basic Editor opens after clicking "Recalculate," check that Excel macros are enabled.

Invalid data or assumptions entered in input fields or a misspelled allocator can trigger an error, which will prevent the model from recalculating. Review all input data and make sure all named ranges in the HCAS Model workbook are properly defined and contain valid data.

Tab-by-Tab Explanation of Model Output

Recalculating the HCAS model will produce new output in the intermediate, results, and report exhibit tabs.

Intermediate results can be found in the following tabs: *Audit*, *Model VMT, VMT Master, Allocated Costs by SWT, Costs to Allocate by SWT, Allocated Costs, Attributed Revenues, and Allocation Vectors*. Additional detailed output can be found in the model output text files in the HCAS Model folder.

Audit

The *Audit* tab compares the model input and output for the VMT, cost allocation, allocation vectors, and revenue attribution for select revenue instruments. While the *Audit* tab is not a comprehensive validation of the model input and calculations, if the model data have been updated without any further code modifications, then the *Audit* tab will allow the user to check that the input data were processed and used in the model calculations correctly.

VMT Check The Gas and Diesel VMT calculated in the model workbook using the *Base VMT* and *VMT Growth* rates are compared to the same Gas and Diesel VMT table calculated from the output on the *Model VMT* tab.

VMT from the *VMT Master* tab and the *Model VMT* tab are compared in columns L through O to check that Model Year VMT totals by weight class are equal the VMT for all functional class/ownership in the *VMT Master* tab.

Allocation Vectors The allocation vectors should sum to 12 for allocators applied on all 12 functional systems and to another whole number if another type of allocator applied to a limited number of functional systems. Check that the allocation vectors sum to a whole number and make sense given the type of allocator.

Costs to Allocate and Allocated Cost Check Check that the summarized costs to allocate are equal to the allocated costs by comparing the costs by summary work types. A discrepancy (of more than a few dollars) will likely indicate a data input error on the *Project Costs* tab.

Revenue Control Total Check Check that the registration fees and Other MC revenues are equal to their revenue control totals. These are the only two revenue instruments set to their control totals.

Model VMT

The *Model VMT* tab contains the intermediate output of projected VMT in the forecast year by vehicle weight class and vehicle tax class. This table is analogous to the Base VMT table but for the model year. The VMT growth rates are applied to the Base VMT to produce the Model VMT output.

	A	B	C	D	E	F	G	H	I	J	K
1	Weight Class	Private Passenger	Gas Commercial 8-26	Diesel & Other Commercial 8-26	Gas Tow Trucks	Diesel & Other Tow Trucks	RUAF Vehicles	Flat Fee Vehicles Log	Flat Fee Vehicles S&G	Flat Fee Vehicles Chip	WMT Vehicles 26-80 Any Axle
2	WC	Cars	GasComm	DieselComm	GasTow	DieselTow	RUAF	FlatFeeLog	FlatFeeSG	FlatFeeChip	WMTA
3	1	33,374,611,675	0	0	2,418,651	5,208,261	0	0	0	0	0
4	10,001	29,859,399	41,879,109	37,064,092	825,656	1,710,287	0	0	0	0	0
5	12,001	19,522,178	14,101,881	20,366,182	432,486	1,887,214	0	0	0	0	0
6	14,001	61,832,463	18,859,828	43,346,942	1,002,582	3,479,550	0	0	0	0	0
7	16,001	39,237,009	6,332,651	22,132,824	353,853	2,103,457	0	0	0	0	0
8	18,001	35,585,775	6,049,569	21,189,217	353,853	2,850,479	0	0	0	0	0
9	20,001	0	2,096,904	6,018,115	176,926	452,145	0	0	0	0	0
10	22,001	16,714,948	3,994,603	9,215,894	98,292	1,297,459	0	0	0	0	0
11	24,001	20,265,269	14,258,949	67,740,490	825,656	11,716,452	0	0	0	0	0
12	26,001	6,221,125	0	0	0	0	0	0	0	0	2,373,938
13	28,001	6,319,438	0	0	0	0	0	0	19,714	0	5,027,595
14	30,001	23,210,738	0	0	0	0	0	0	0	0	13,219,461
15	32,001	0	0	0	0	0	0	0	0	0	27,567,960
16	34,001	0	0	0	0	0	0	0	0	0	4,957,281
17	36,001	0	0	0	0	0	0	0	0	0	2,260,910
18	38,001	0	0	0	0	0	0	0	0	0	4,835,717
19	40,001	0	0	0	0	0	0	0	0	0	4,230,827
20	42,001	0	0	0	0	0	0	0	0	0	2,571,774
21	44,001	0	0	0	0	0	0	0	3,087	0	26,627,285
22	46,001	0	0	0	0	0	0	0	45,313	0	19,693,213
23	48,001	0	0	0	0	0	0	0	218,297	5,575	24,126,417
24	50,001	0	0	0	0	0	0	0	26,889	0	15,513,993
25	52,001	0	0	0	0	0	0	0	20,513	0	27,139,365
26	54,001	0	0	0	0	0	0	0	168,419	18,826	36,703,938
27	56,001	0	0	0	0	0	0	0	20,862	0	10,030,671
28	58,001	0	0	0	0	0	0	0	48,293	0	8,967,996
29	60,001	0	0	0	0	0	0	0	0	0	2,712,255
30	62,001	0	0	0	0	0	0	0	4,128	0	3,270,874
31	64,001	0	0	0	0	0	0	0	0	0	15,381,421
32	66,001	0	0	0	0	0	0	0	0	0	3,008,960
33	68,001	0	0	0	0	0	0	0	0	0	8,317,334
34	70,001	0	0	0	0	0	0	0	0	0	8,861,328
35	72,001	0	0	0	0	0	0	0	0	0	2,146,141
36	74,001	0	0	0	0	0	0	0	0	0	7,511,572
37	76,001	0	0	0	0	0	0	53,015	24,508	0	1,049,846
38	78,001	0	0	0	0	0	0	53,842,710	591,491	10,815	1,136,427,413

VMT Master

The V*MT Master* tab contains the output of the model year VMT by roadway system. The model VMT calculations use the Base VMT, VMT Growth Rates, and VMT by FC input data to calculate VMT by roadway system and vehicle weight class. The *VMT Master* tab data are summarized in the *Equity* tab and *Alt Equity* tab and are also used in the report exhibit tabs.

	A	B	C	D
1	Functional Class	Weight Class	Axles	VMT
3	-2	1	0	13,576,412,995
4	-2	10,001	0	35,178,727
5	-2	12,001	0	23,144,785
6	-2	14,001	0	40,151,994
7	-2	16,001	0	21,371,882
8	-2	18,001	0	20,787,126
9	-2	20,001	0	4,576,811
10	-2	22,001	0	12,473,870
11	-2	24,001	0	47,740,828
12	-2	26,001	0	6,067,954
13	-2	28,001	0	7,314,948
14	-2	30,001	0	18,710,349
15	-2	32,001	0	11,858,724
16	-2	34,001	0	4,179,557
17	-2	36,001	0	2,017,005
18	-2	38,001	0	9,883,367
19	-2	40,001	0	1,419,638
20	-2	42,001	0	1,385,642
21	-2	44,001	0	9,359,897
22	-2	46,001	0	7,026,383
23	-2	48,001	0	8,381,854
24	-2	50,001	0	5,107,163
25	-2	52,001	0	8,352,498
26	-2	54,001	0	11,149,119
27	-2	56,001	0	3,310,690
28	-2	58,001	0	2,526,183
29	-2	60,001	0	816,299
30	-2	62,001	0	987,178
31	-2	64,001	0	4,397,450
32	-2	66,001	0	824,585
33	-2	68,001	0	2,044,894
34	-2	70,001	0	1,467,183
35	-2	72,001	0	284,516
36	-2	74,001	0	1,083,929
37	-2	76,001	0	109,781
38	-2	78,001	0	132,163,294

Costs to Allocate by Summary Work Type (SWT)

The *Costs to Allocate by SWT* tab displays a summary table of the input data in the *Project Costs*, *Non-Project Costs,* and *Local Costs* tabs by Summary Work Type. While the model combines the cost input data from the three tabs to produce this summary table, no other calculations are performed on the input data to produce the *Costs to Allocate by SWT*. The tabulated costs from all funding sources on the *Costs to Allocate by SWT* tab are compared with the output on the *Allocated Costs by SWT* tab to ensure that all input costs are allocated in the model calculations. The *Costs to Allocate by SWT* tab is also used to create the Final Report Chapter 4 exhibits.

	A	B	C	D	E	F	G	H	I	J
1										
2										
3	Summary Work Type Name	summaryWorkType	bond	federal	local-federal	local-other	local-state	other	state	Total
4	Admin	1	-	72,717,537	38,572,168	91,240,469	105,774,159	-	648,148,237	956450
5	Bike and Pedestrian	2	60,497	41,095,174	2,315,713	5,477,899	6,350,241	12,008,574	11,420,098	78727
6	Bridge-bridge and interchange	3	50,138,041	235,066,603	3,596,401	8,507,100	9,862,196	17,318,050	38,774,852	36326
7	Bridge-bridge maintenance	4	-	18,839	-	-	-	-	2,542	21
8	Fish	5	14,526	10,567,545	-	-	-	924	943,669	1152
9	Hwy Planning	6	-	8,410,590	-	-	-	204,457	8,399,075	170
10	Hwy Safety	7	-	13,983,226	-	-	-	568,190	2,576,941	171
11	Maintenance	8	-	15,124,066	3,497,477	8,273,102	9,590,924	122,663	313,609,196	3602
12	Maintenance-bridge maintenance	9	-	11,097,258	-	-	-	5,160,632	14,971,363	31
13	Maintenance-other pavement	10	-	13,081,833	-	-	-	-	94,978	131
14	Maintenance-pavement maintenance	11	660,867	29,490,073	59,066,173	139,717,978	161,587,244	-	65,782,504	4563
15	Modernization	12	1,843,655	132,086,337	31,291,515	74,018,461	85,808,868	24,366,095	19,392,075	3698
16	Modernization-new pavement	13	1,708,298	32,939,121	17,504,359	41,405,655	48,001,160	29,954,003	10,638,494	1821
17	Modernization-other pavement	14	479,663	544,116	-	-	-	-	55,889	1079
18	Modernization-pavement and shoulder	15	1,636,492	68,227,969	-	-	-	23,570,456	12,851,578	1042
19	Multimodal	16	-	-	-	-	-	-	-	
20	PE	17	2,017,611	93,856,167	6,957,327	16,457,197	18,963,947	-	33,985,237	1722
21	Preservation	18	-	-	-	-	-	-	-	
22	Preservation-other pavement	19	-	-	-	-	2,413,061	-	21,936,920	2434
23	Preservation-pavement and shoulder re	20	2,563,222	241,135,244	28,134,442	66,550,567	75,239,463	2,981,239	31,395,955	4480
24	Prior Alloc'td Bonds	21	235,581,665	-	-	-	-	-	-	2355
25	ROW	22	9,099,037	47,471,883	5,580,027	13,199,268	15,301,777	-	17,717,009	1083
26	Transit	23	-	332,688	-	-	-	534,650	1,463	868
27	Unknown	24	0	54119916.03	0	0	0	571500.3385	34811389.63	895
28										
29										
30	Costs to Allocate Total		$ 305,803,573	$ 1,119,364,783	$ 196,515,803	$ 464,847,495	$ 538,893,029	$ 117,359,432	$ 1,287,507,458	$ 4,030,291,3
31										
32										
33	Annual Expenditures (thousands)		$152,902	$559,682	$98,258	$232,424	$269,447	$58,680	$643,754	$2,015,
34										

Allocated Costs by SWT

The *Allocated Costs by SWT* tab displays the model output of the allocated costs by summary work type, funding source, and summary weight class. The allocated costs on this tab are the same allocated costs displayed in the

	A	B	C	D	E	F	G	H	I	J	K
1											
2							Summary Weight Class				
3	Summary Work Type Name	funding	summaryWorkType	1	10001	28001	78001	80001	104001	105501	Total
4	Other	bond	1	0	0	0	0	0	0	0	0
5	Other	bond	2	49645.45508	1554.331437	884.9591479	6317.339321	1145.663982	940.5450831	8.937185454	6049
6	Bridge	bond	3	20782577.08	3068559.205	1998969.554	8717131.771	8001934.691	7483325.217	85542.94991	5013
7	Bridge	bond	4	0	0	0	0	0	0	0	0
8	Other	bond	5	13084.60792	308.8456417	176.7001207	678.0411258	142.9072704	133.095864	1.497244288	1452
9	Other	bond	6	0	0	0	0	0	0	0	0
10	Other	bond	7	0	0	0	0	0	0	0	0
11	Maintenance	bond	8	0	0	0	0	0	0	0	0
12	Maintenance	bond	9	0	0	0	0	0	0	0	0
13	Maintenance	bond	10	0	0	0	0	0	0	0	0
14	Maintenance	bond	11	202904.6595	35459.59113	39652.35156	272850.1022	60921.24408	44706.98841	4371.671101	6608
15	Modernization	bond	12	1454987.88	52512.44268	47137.54182	197875.2048	43162.03876	47468.75701	511.2755035	1843
16	Modernization	bond	13	247357.4323	108871.6463	125135.2736	875610.0902	195765.201	143299.4656	14259.29453	1706
17	Modernization	bond	14	278681.3422	16865.13794	17931.08836	106287.2157	20884.71067	38539.25517	874.0895703	4706
18	Modernization	bond	15	512746.489	106893.2665	105229.9183	651429.3717	135957.7569	112058.4653	12176.78337	1636
19	Other	bond	16	0	0	0	0	0	0	0	0
20	Other	bond	17	1267873.888	81961.91776	72629.42052	377320.8453	111764.4452	101691.5527	4388.627602	2017
21	Preservation	bond	18	0	0	0	0	0	0	0	0
22	Preservation	bond	19	0	0	0	0	0	0	0	0
23	Preservation	bond	20	777160.6706	134788.7865	158095.727	1072465.125	231667.9773	172731.0066	16312.5874	2503
24	Prior	bond	21	121844451.3	11359982.96	12003127.78	45128841.5	21061790.06	23980453.21	523018.1986	23558
25	Other	bond	22	5867612.39	373415.2744	330911.2901	1726449.785	514061.7469	466291.6355	20294.86876	909
26	Other	bond	23	0	0	0	0	0	0	0	0
27	Other	bond	24	0	0	0	0	0	0	0	0
28	Other	federal	1	60484083.8	1427650.396	1885924.318	6269293.431	1348505.796	1286447.132	15632.09058	7271
29	Other	federal	2	37206797.05	800631.1167	490630.6557	1791825.114	381475.135	359985.1934	4130.23409	4109
30	Bridge	federal	3	106204958.7	16528917.83	10743722.5	37903057.5	31809418.14	31494708.8	390819.2272	23508
31	Bridge	federal	4	16789.64997	396.2984791	226.7345873	870.0354826	183.372942	170.7833343	1.921204492	1863
32	Other	federal	5	9534195.057	222583.4156	130488.5694	481004.2713	101834.7243	96357.61746	1081.601563	1056

Allocated Costs tab and in the *Allocated Cost* output text files. Whereas the *Allocated Costs* tab contains the allocated costs for every weight class, the *Allocated Costs by SWT* is a summary table for the purpose of creating the exhibits for Chapter 5 of the Final Report.

Allocated Costs

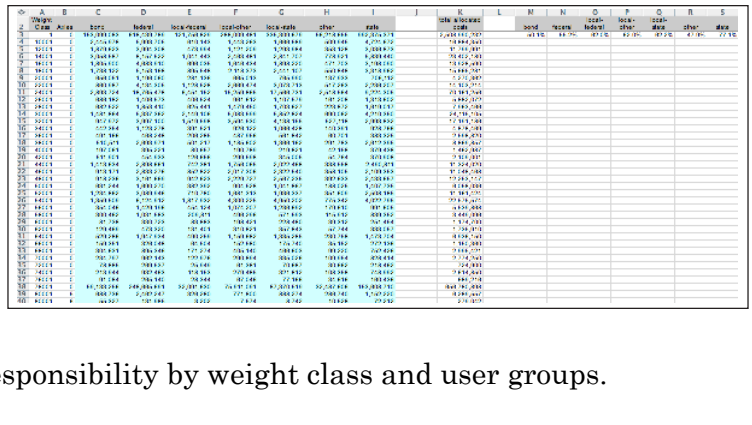

The *Allocated Costs* tab displays the costs allocated in the model for each funding source to each weight class and axle class. This tab does not contain any information on the work types of the allocated costs. The output on the *Allocated Costs* tab is used in the *Equity* tab and in the *Summary* tab to determine cost responsibility by weight class and user groups.

Attributed Revenues

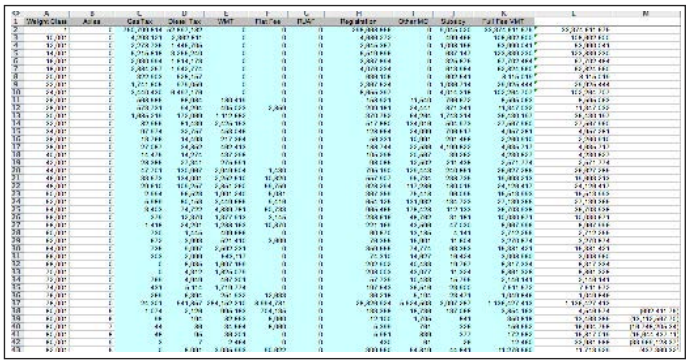

The *Attributed Revenues* tab displays the attributed user fees by major revenue source for each weight and axle class. The revenue totals are calculated in the Attribute Revenues calculations in the model. The output on the *Attributed Revenues* tab is used in the *Equity* tab and *Summary* tab to determine annual user fees and share of revenues for each vehicle class.

Allocation Vectors

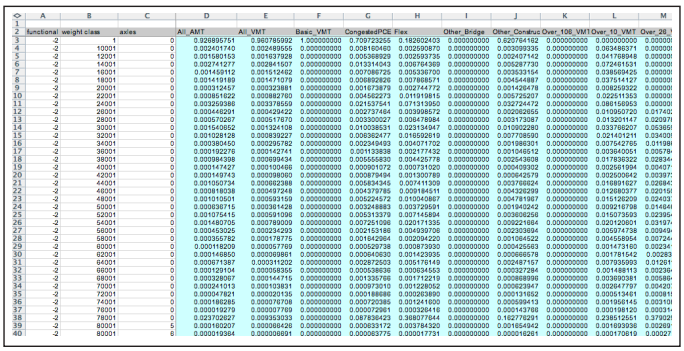

The *Allocation Vectors* tab displays the Allocation Vectors used in the model. This output tab was added to the model for auditing purposes. Each allocation vector should sum to twelve if the allocator applies to all twelve facility classes.

Results tabs

The *Equity* and *Summary* tabs summarize the intermediate output tabs, displaying the final results and equity ratios. These tabs reference the intermediate output tabs and do not require any user input.

Equity

The *Equity* tab contains the Annual VMT, Annual Cost Responsibility, Annual User Fees, and Subsidy and Equity Ratios for each 2,000-pound weight class. The VMT, Cost Responsibility, and User Fee Revenues are shown for All Vehicles and for Full-Fee Vehicles.

Full-Fee Costs are calculated by scaling total Cost Responsibility by the ratio of full-fee VMT to total VMT. The Allocated Subsidy is the total from the Subsidy column distributed

over the vehicle weight classes using the vehicle weight class share of full-fee VMT. The "Plain" Equity Ratio is calculated as the ratio of the cost responsibility share to the user fee share for all vehicles, whereas the Adjusted-Equity Ratio is the ratio of the share of full-fee cost responsibility to the full-fee user fee share.

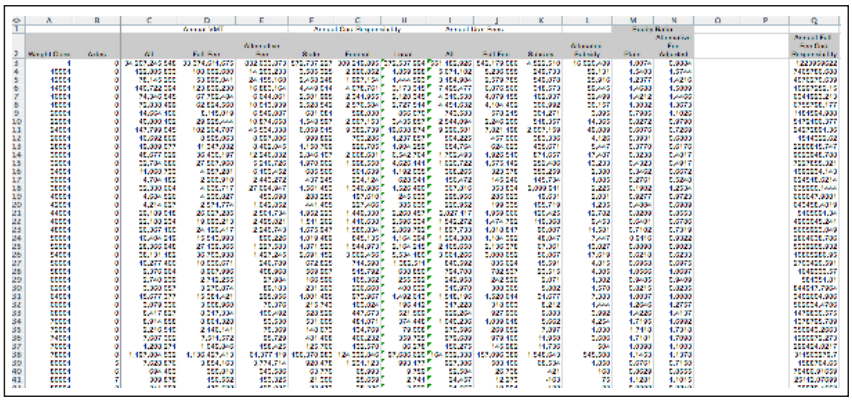

Summary

The *Summary* tab summarizes the model results for the major vehicle weight classes. The Annual VMT, Annual Cost Responsibility, and Annual User Fees are linked to the *Equity* tab. The VMT, Cost Responsibility and User Fee shares and the equity ratios are also located on the *Summary* tab.

The summary worksheet calculates the different Scaled Equity Ratios as follows:

- Subsidy-Adjusted Scaled Equity Ratio: Ratio of the share of All User Fees to the share of All Cost Responsibility plus the Allocated Subsidy
- Full-Fee Plain Scaled Equity Ratio (FF Plain): Ratio of the share of Full-Fee User Fees to the share of Full-Fee Cost Responsibility
- Full-Fee Subsidy-Adjusted Equity Ratio (FF Subsidy-Adjusted): Ratio of the share of Full-Fee User Fees to the share of Full-Fee Cost Responsibility plus the Allocated Subsidy

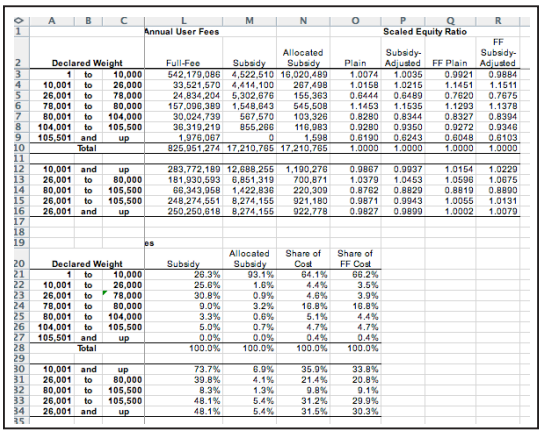

	A	B	C	L	M	N	O	P	Q	R
1				Annual User Fees			Scaled Equity Ratio			
2	Declared Weight			Full-Fee	Subsidy	Allocated Subsidy	Plain	Subsidy-Adjusted	FF Plain	FF Subsidy-Adjusted
3	1	to	10,000	542,179,086	4,522,510	16,020,489	1.0074	1.0035	0.9921	0.9884
4	10,001	to	26,000	33,521,570	4,414,100	267,498	1.0158	1.0215	1.1451	1.1511
5	26,001	to	78,000	24,834,204	5,302,676	155,363	0.8444	0.8489	0.7620	0.7675
6	78,001	to	80,000	157,096,389	1,548,843	545,508	1.1453	1.1535	1.1293	1.1378
7	80,001	to	104,000	30,024,739	567,570	103,326	0.8280	0.8344	0.8327	0.8394
8	104,001	to	105,500	36,319,219	855,266	116,983	0.9280	0.9350	0.9272	0.9346
9	105,501	and	up	1,976,067	0	1,598	0.8190	0.8243	0.8048	0.8103
10		Total		825,951,274	17,210,765	17,210,765	1.0000	1.0000	1.0000	1.0000
11										
12	10,001	and	up	283,772,189	12,888,255	1,190,278	0.9867	0.9937	1.0154	1.0229
13	26,001	to	80,000	181,930,593	6,851,319	700,871	1.0379	1.0453	1.0596	1.0675
14	80,001	to	105,500	66,343,358	1,422,836	220,309	0.8762	0.8829	0.8810	0.8880
15	26,001	to	105,500	248,274,551	8,274,155	921,180	0.9871	0.9943	1.0055	1.0131
16	26,001	and	up	250,250,618	8,274,155	922,778	0.9827	0.9899	1.0002	1.0079
17										
18										
19				es						
20	Declared Weight			Subsidy	Allocated Subsidy	Share of Cost	Share of FF Cost			
21	1	to	10,000	26.3%	93.1%	64.1%	66.2%			
22	10,001	to	26,000	25.6%	1.6%	4.4%	3.5%			
23	26,001	to	78,000	30.8%	0.9%	4.6%	3.9%			
24	78,001	to	80,000	9.0%	3.2%	18.8%	16.8%			
25	80,001	to	104,000	3.3%	0.6%	5.1%	4.4%			
26	104,001	to	105,500	5.0%	0.7%	4.7%	4.7%			
27	105,501	and	up	0.0%	0.0%	0.4%	0.4%			
28		Total		100.0%	100.0%	100.0%	100.0%			
29										
30	10,001	and	up	73.7%	6.9%	35.9%	33.8%			
31	26,001	to	80,000	39.8%	4.1%	21.4%	20.8%			
32	80,001	to	105,500	8.3%	1.3%	9.8%	9.1%			
33	26,001	to	105,500	48.1%	5.4%	31.2%	29.9%			
34	26,001	and	up	48.1%	5.4%	31.5%	30.3%			

Report Exhibits

The exhibit tabs are the tables that are typically included in the HCAS Final Report. The report exhibit tabs in the model workbook reflect the exhibit number in the 2013 HCAS Report. In the tables, the 2011 values are linked to the current model tabs, while previous study numbers are hard-pasted values in the tables.

To update the tables for a future biennial study, change the titles and column headings as appropriate to reflect the new study years. For exhibits displaying past study results, insert new columns for the 2013 HCAS results into the tables to the left of the cells with links to the current model tab results if the table shows previous study results. Make sure to preserve the formulas and links to the other tabs. Copy and paste the 2013 results in the newly inserted columns. Tables where only the current study results are displayed are automatically updated.

4-1 Exhibit 4-1: Current and Forecasted VMT by Weight Group

This table shows the VMT for the base year and the forecast year for each weight group (the major grouping of weight classes). The cell values for the top portion of this table are linked to the *Base VMT* tab, the bottom portion of the table are linked to the *Summary* results tab. This table is automatically updated.

4-2 Exhibit 4-2: Projected 2012 VMT by Road System (millions of miles)

This table shows the forecast year VMT by road system for light and heavy vehicles and the percent of total miles for light and heavy vehicles by road system. The top portion of the table is linked to the *VMT Master* tab and is automatically updated. VMT for city and county roads must be copied from the VMT Master output text file and pasted into the table (divide by 1,000,000 so that all table values are in millions of miles).

4-3 Exhibit 4-3: Distribution of Projected 2012 VMT by Road System

This table shows the percent of projected VMT by roadway system. This table is automatically updated using the model results in Exhibit 4-2.

4-4 Exhibit 4-4: Comparison of Forecast VMT Used in OR HCASs: 1999, 2001, 2003, 2005, 2007, 2009, 2011, and 2013 (billions of miles)

This table compares the VMT forecast from previous studies to the current study. The VMT from the previous studies are pasted into the table. The current study VMT are linked to the *Model VMT* tab and are automatically updated when the model is recalculated.

4-5 Exhibit 4-5: Average Annual Expenditures by Category and Funding Source (thousands of dollars)

This table shows the annual expenditures over the biennium by summary work type and funding source. This table is linked to the *Costs to Allocate by SWT* tab.

4-6 Exhibit 4-6: Revenue Forecasts by Tax/Fee Type (thousands of dollars), Average Annual Amounts for 2013-2015 Biennium

This table displays the total revenue attributed by major revenue instrument. This table is linked to data in the *Revenues* and *Attributed Revenues* tabs.

4-7 Exhibit 4-7: Comparison of Forecast Revenue (millions of dollars) Used in OR HCASs: 1999, 2001, 2003, 2005, 2007, 2009, 2011, and 2013.

The previous study revenue forecasts are entered into the table and the current study revenue is linked to Exhibit 4-6.

5-1 Exhibit 5-1: Average Annual Cost Responsibility by Expenditure Category and Weight Class (thousands of dollars)

This table shows the average annual cost responsibility by summary work type and vehicle weight class. This table is linked to Exhibit 5-4.

5-2 Exhibit 5-2: Sources and Expenditures of Funds (thousands of annual dollars)

This table compares the costs to allocate and allocated costs by their funding source. The top portion of the table is linked to the *Costs to Allocate* tab and the bottom portion of the table is linked to the *Allocated Costs by SWT* tab.

5-3 Exhibit 5-3: Expenditure Allocation Results for Weight Groups by Funding Source (thousands of dollars)

This table shows the cost allocation results using the data in Exhibits 5-4, 5-5, and 5-6.

5-4 Exhibit 5-4: Average Annual Cost Responsibility, State Highway Fund Detail (thousands of dollars)

This table displays the Allocated Costs by summary work type (SWT) for state-funded projects.

5-5 Exhibit 5-5: Average Annual Cost Responsibility, Federal Detail (thousands of dollars)

This table displays the Allocated Costs by SWT for federally-funded projects.

5-6 Exhibit 5-6: Average Annual Cost Responsibility, Local Government Detail (thousands of dollars)

This table displays the Allocated Costs by SWT for locally-funded projects.

5-7 Exhibit 5-7: Average Annual Cost Responsibility, Bond Detail (thousands of dollars)

This table displays the Allocated Costs by SWT for bond-funded projects and is automatically updated. This table displays both current bond expenditures total and the prior bond expenditures allocated in the current study.

5-8 Exhibit 5-8: Comparison of Pavement Responsibility Results From 2011, and 2013 OR HCASs (thousands of annual dollars)

This table compares the current and previous study pavement expenditures for basic and heavy vehicle classes using the *Allocated Costs by SWT* tab data and is automatically updated.

5-9 Exhibit 5-9: Comparison of Bridge and Interchange Responsibility Results from 2011 and 2013 OR HCASs (thousands of dollars)

Exhibit 5-9 displays the summarized bridge and interchange project costs. This table uses data from the *Allocated Costs by SWT* tab and is automatically updated.

5-10 Exhibit 5-10: Average Annual Cost Responsibility by Weight Group with Prior Allocated Expenditures (thousands of dollars)

Exhibit 5-10 displays the allocation cost responsibility by summary weight group, including the prior allocated bond-financed expenditures. This table uses data from the Exhibit 5-10 and is automatically updated.

5-11 Exhibit 5-11: Cost Responsibility Distributions by Weight Group-Comparison Between 2011 and 2013 OR HCASs

Exhibit 5-11 compares the cost responsibility shares by summary weight group for the 2009 and 2011 studies. The 2011 cost shares must be pasted in from the prior year study. The 2013 Study cost responsibility shares are automatically updated from Exhibit 5-1.

5-12 Exhibit 5-12: Average Annual User-Fee Revenue by Tax Instrument and Weight Class (thousands of dollars)

Exhibit 5-12 shows the average annual revenue collection by tax instrument. This Exhibit is automatically updated from data in the *Attributed Revenues* tab.

5-13 Exhibit 5-13: Revenue Attribution Distributions by Weight Group-Comparison Between 2011 and 2013 OR HCASs

Exhibit 5-13 compares the attributed revenue shares from the 2011 Study and 2013 Study for each summary weight class. The 2011 Study attributed revenue shares should be copied and pasted from the 2011 Study. The 2013 Study attributed revenue shares are automatically updated from Exhibit 5-12.

6-1 Exhibit 6-1: Comparison of Average Annual Cost Responsibility and User Fees Paid by Full-Fee-Paying Vehicles by Declared Weight Class (thousands)

Exhibit 6-1 is the results summary table in the final HCAS report that displays the model VMT, cost responsibility, and revenue attribution results by major weight class groups. Exhibit 6-1 has commonly been used as a handout for presenting the model results since the equity ratio results are summarized for the major vehicle classes. Exhibit 6-1 is linked to the *Summary* tab and is automatically updated.

6-2 Exhibit 6-2: Comparison of Equity Ratios from the 1999, 2001, 2003, 2005, 2007, 2009, 2011, and 2013 Oregon Highway Cost Allocation Studies

Exhibit 6-2 compares the equity ratios from the 1999-2013 HCAS studies. The previous year equity ratios are hard-pasted into the table and the right-most column is linked to tab *6-1*. This table updates the current model results automatically.

6-3 Exhibit 6-3: Detailed Comparison of Average Annual Cost Responsibility and User Fees Paid by Full-Fee-Paying Vehicles by Declared Weight Class (Thousands)

Exhibit 6-3 is similar to the Equity tab containing the summarized VMT, cost allocation, revenue attribution and equity ratios for each weight class. This table updates automatically.

Output Text Files

Running the model generates several output text (.txt) files. It is important to keep the bond allocation output file in the HCAS Model folder because this file becomes an input file

for future studies. Running the 2011 model generates the bond file for 2013-2015 that will be used in the 2015 HCAS study, along with the prior bond files from the previous three studies.

AllocatedCosts text files

The following allocated costs text files are generated with each model run: allocatedCosts_bond, allocatedCosts_federal, allocatedCosts_state, allocatedCosts_local-federal, allocatedCosts_local-state, allocatedCosts_local-other, and allocatedCosts_other

For each funding source, the text file contains allocated costs by work type for each vehicle weight and axle class. The size of these files requires that output text files be generated instead of including this disaggregated intermediate output as tabs in the model. Since there are just over 100 different weight and axle classes and more than 100 work types, each of these seven text files could contain up to roughly 10,000 records.

The format of the allocatedCosts text files is the same for all funding sources. The columns in the files are: funding, work type, weight class (WC), axles, and dollars.

Since allocated costs by funding source are summarized in the model intermediate output tab *Allocated Costs by SWT*, the allocatedCosts text output files are only required when the user/ analyst is interested in looking at allocated costs for a particular work type or specific weight and axle class.

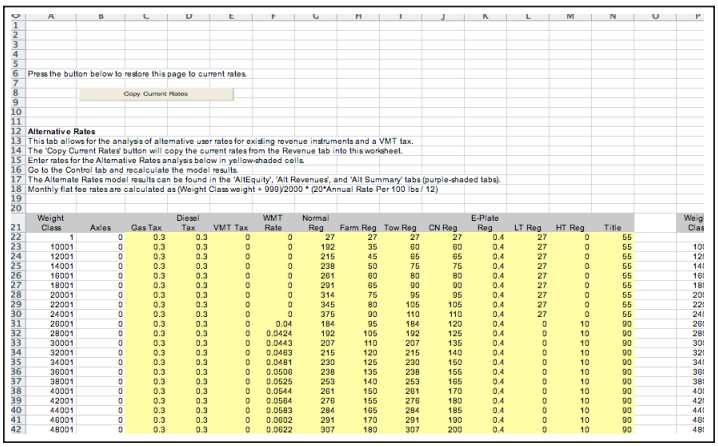

Press the button below to restore this page to current rates.

Copy Current Rates

Alternative Rates

This tab allows for the analysis of alternative user rates for existing revenue instruments and a VMT tax.
The 'Copy Current Rates' button will copy the current rates from the Revenue tab into this worksheet.
Enter rates for the Alternative Rates analysis below in yellow-shaded cells.
Go to the Control tab and recalculate the model results.
The Alternate Rates model results can be found in the 'AltEquity', 'Alt Revenues', and 'Alt Summary' tabs (purple-shaded tabs).
Monthly flat fee rates are calculated as (Weight Class weight + 999)/2000 * (20*Annual Rate Per 100 lbs / 12)

Weight Class	Axles	Gas Tax	Diesel Tax	VMT Tax	WMT Rate	Normal Reg	Farm Reg	Tow Reg	CN Reg	E-Plate Reg	LT Reg	HT Reg	Title	Weig Clas
1	0	0.3	0.3	0	0	27	27	27	27	0.4	27	0	55	
10001	0	0.3	0.3	0	0	192	35	60	60	0.4	27	0	55	10
12001	0	0.3	0.3	0	0	215	45	65	65	0.4	27	0	55	12
14001	0	0.3	0.3	0	0	238	50	75	75	0.4	27	0	55	14
16001	0	0.3	0.3	0	0	261	60	80	80	0.4	27	0	55	16
18001	0	0.3	0.3	0	0	291	65	90	90	0.4	27	0	55	18
20001	0	0.3	0.3	0	0	314	75	95	95	0.4	27	0	55	20
22001	0	0.3	0.3	0	0	345	80	105	105	0.4	27	0	55	22
24001	0	0.3	0.3	0	0	375	90	110	110	0.4	27	0	55	24
26001	0	0.3	0.3	0	0.04	184	95	184	120	0.4	0	10	90	26
28001	0	0.3	0.3	0	0.0424	192	105	192	125	0.4	0	10	90	28
30001	0	0.3	0.3	0	0.0443	207	110	207	135	0.4	0	10	90	30
32001	0	0.3	0.3	0	0.0463	215	120	215	140	0.4	0	10	90	32
34001	0	0.3	0.3	0	0.0481	230	125	230	150	0.4	0	10	90	34
36001	0	0.3	0.3	0	0.0508	238	135	238	155	0.4	0	10	90	36
38001	0	0.3	0.3	0	0.0525	253	140	253	165	0.4	0	10	90	38
40001	0	0.3	0.3	0	0.0544	261	150	261	170	0.4	0	10	90	40
42001	0	0.3	0.3	0	0.0564	276	155	276	180	0.4	0	10	90	42
44001	0	0.3	0.3	0	0.0583	284	165	284	185	0.4	0	10	90	44
46001	0	0.3	0.3	0	0.0602	291	170	291	190	0.4	0	10	90	46
48001	0	0.3	0.3	0	0.0622	307	180	307	200	0.4	0	10	90	48

Bonds2013-2015

Bond expenditures allocated during the 2013-2015 study.

DeclaredpaveFactors

The declaredpaveFactors file contains the pavement factors by declared operating weight.

Flat_fee_report

Flat_fee_report contains a summary of the flat fee revenues and as-if revenues for each flat fee commodity by weight class and axle class.

Missing_pavement_factors

Missing_pavement_factors is an output file that will list any missing pavement factors. This file should be checked during the auditing of the model run. If this file lists missing pavement factors, the weight classes and pavement factor input file should be checked for completeness.

SubsidiesbyVehClass

SubsidiesbyVehClass is an output file that contains the calculated subsidies by weight class and axle class.

VMTMaster

The VMTMaster text file contains the most disaggregated output of the calculated VMT. VMT are reported for each facility class by ownership, weight class, and axle class. This text file is used to report the VMT by county and city ownership in Exhibit 4-2.

Section 6: HCAS User Guide for Policy Analysis of Alternative Rates

The HCAS model includes the option to analyze changes in revenue instrument taxes or fees. Alternative Rates is an optional analysis; if alternative rates have not been specified in the model, the user should ignore the alternative rate analysis output tabs.

The Alternative Rate Analysis allows the user to estimate the effects of different road user tax rates and fees by entering the alternative rates in the *Alt Rates* tab and pressing the "Recalculate" button. In the model calculations, the program calibrates the model to the rates and control totals in the *Revenues* tab, and then evaluates the effect of the modified rates specified by the user in the *Alt Rates* tab. The model reports the output from the current rates and alternative rate analyses separately.

The HCAS model compares the share of costs for each vehicle class to their share of revenues to calculate the equity ratios. Altering the tax rates does not affect the allocation of costs to user groups.

The HCAS model does not contain any travel demand price elasticities, thus changing the use-related tax rates does not affect the underlying VMT used in the model. Nor does changing the fixed costs associated with owning a vehicle alter the assumed vehicle registrations or vehicle miles traveled.

The process for conducting an alternative rate analysis is straightforward. The general procedure is to:

1. Update the current rates in the *Alt Rates* tab by pressing the "Copy Current Rates" button.
2. Enter the alternative rates in the *Alt Rates* tab.
3. Run the model using the newly specified alternative rates. Go to the *Control* tab and click the "Recalculate" button.
4. View the alternative rate results on the *Alt Revenues, Alt Equity,* and *Alt Summary* tabs.

The next section provides a tab-by-tab explanation of the alternative rate analysis tabs, followed by a detailed description of the revenue instruments and three alternative rate case studies to illustrate the alternative rate analysis.

Alt Rates Tab

The *Alt Rates* tab contains the revenue instrument tax rates for gas, diesel, VMT, WMT, and registration fees, the RUAF and flat fee monthly rates, and VMT per month and axle shares. These rates are in the yellow-shaded tables below the "Copy Current Rates" button. The "Copy Current Rates" button runs an Excel macro, which will copy the revenue instrument tax rates from the *Revenues* tab into the *Alt Rates* tab.

Revenue Instruments

In Oregon's current highway finance system, vehicles under 26,001 pounds pay registration fees and the gas or diesel tax, and vehicles over 26,000 pounds pay registration fees and a weight mile tax.

Other special vehicles classes pay the following combination of use-related taxes and registration fees:

- Charitable non-profit vehicles: pay the charitable non-profit registration and gas or diesel tax.
- E-Plate (publicly owned vehicles [e-plate]): pay the E-plate registration fee.

- Tow trucks: Tow-Truck Registration Fee (excludes Tow Truck Certificate Cost), and gas or diesel tax. Tow trucks under 26,000 pounds have their own registration fee schedule; tow trucks over 26,000 pounds register with the Motor Carrier Transportation Division and follow the normal heavy vehicle registration fee schedule.
- Farm vehicles: Farm vehicles have their own Farm Registration Fee Schedule and pay the gas or diesel tax (farm vehicles do not pay the weight-mile tax.
- Flat fee vehicles: Carriers hauling logs, sand and gravel, or wood chips have the option of paying a flat monthly fee based on vehicle weight instead of the weight mile tax. Flat fee vehicles are registered using the Motor Carrier Division registration schedule for tractors, trucks, and buses (normal registration fees).
- Road user assessment fee (RUAF) vehicles: Vehicles operating with single-trip permits at a gross weight above 98,000 pounds pay a RUAF of 5.7 cents per equivalent single-axle load for the loaded portion of their trip and pay WMT tax for the unloaded portion. These vehicles pay regular registration fees according to their normally declared weight.
- Title fees are one-time fees for new vehicles and title transfers.

Tax rates for each of the unique revenue instruments can be copied from the *Revenues* tab into the *Alt Rates* tab and then modified by the user. The tax rates and fees are:

Gas Tax: dollars per gallon

The gas tax rate specified in the *Alt Rates* tab is applied to the imputed gallons of taxed gasoline, which is calculated in the model as the gas tax VMT divided the adjusted MPG.

The gas tax VMT is the sum of the VMT from the following vehicle classes: Gasoline-fueled Basic cars (car VMT minus the portion of basic car minus the assumed diesel share of basic VMT), Gas Commercial (GasCOMM) VMT, Gas Tow Trucks (GasTow) VMT, GasFarm VMT, GasCN VMT, GasSLG, GasFed, and GasSchool.

The total gasoline VMT is then adjusted by the gas tax avoidance assumption to determine the total taxed gasoline VMT. The gas tax evasion factor is an assumption specified in the *Revenues* tab.

Key assumptions and data used in the calculation of the gas tax revenues are the percent of basic VMT by diesel-powered vehicles, the gas tax avoidance rate, MPG, VMT and the gasoline tax rates.

The adjusted MPG is calculated by fuel type for each weight class and used in the revenue attribution for the HCAS model is also used in the alternative rate revenue attribution. Thus the revenues from an increase (or decrease) in the gas tax rates is adjusted appropriately so that the gas tax revenues from each vehicle weight class reflect their adjusted MPG and the specified alternative gas tax rate.

A majority of gasoline-powered (and taxed) vehicle miles are basic vehicles (basic vehicles accounted for 80 percent of gasoline VMT in the 2013 HCAS). Since the majority of the gas tax vehicle miles are by basic vehicles, increasing the gas tax rate will increase the revenue share paid by basic vehicles and increase the basic vehicle equity share. Similarly, a decrease in the gasoline tax rate will have the opposite effect, decreasing the gasoline tax revenues, which will decrease the basic vehicle share of revenues and the basic vehicle equity ratio.

Diesel Tax: dollars per gallon

The diesel tax rate specified in the *Alt Rates* tab is applied to the imputed gallons of taxed diesel fuel to determine the diesel tax revenues. The imputed gallons of taxed diesel fuel is calculated as the diesel Tax VMT divided by the adjusted MPG.

Diesel Tax VMT is calculated as diesel tax evasion and avoidance-adjusted sum of the following vehicle class VMT: Car-Diesel (basic vehicle VMT multiplied by the percent of

basic VMT by diesel-powered vehicles), Diesel Comm, DieselTow, DieselFarm, and DieselCN.

The diesel tax, paid by diesel-fueled vehicles, like the gasoline tax, affects both basic and non-basic vehicles; however the majority of diesel-fuel-taxed VMT are by heavy vehicles (non-basic vehicles accounted for just over 60 percent of diesel VMT in the 2013 HCAS). In addition to having a higher share of diesel VMT, heavy vehicles also have lower MPG fuel efficiency, which means that heavy vehicles use more fuel per mile. Both of these factors imply that an increase in the diesel tax rate will result in a higher share of revenues for heavy vehicles, all other rates and assumptions held constant.

VMT Tax: dollars per mile

As of January 2013, no VMT tax exists in Oregon, however the VMT tax is a potential future revenue instrument and the HCAS model has included the VMT tax instrument as a possible policy option for the alternative rate analysis.

The VMT tax is entered as dollars per mile, similar to the current WMT tax. The VMT tax is applied to all full-fee basic vehicles and non-basic vehicles that do not pay the WMT, Flat Fee, or RUAF tax (e.g., VMT tax is applied to vehicles currently paying either the gasoline or diesel tax).

The VMT tax revenues are calculated by applying the VMT tax rates to the gas VMT and diesel VMT. A VMT tax can be entered instead of, or in addition to, gas and diesel tax rates. Flat Fee, RUAF, and WMT vehicle classes continue to be taxed using their respective tax instruments and rates.

The impact of a VMT tax on the basic and heavy revenue shares and equity ratio will depend on the VMT tax rates specified for the different weight classes.

Weight Mile Tax (WMT Tax): dollars per mile

The WMT rate is measured in dollars per mile. The ODOT WMT Table A lists the WMT rates for heavy vehicles between 26,000 and 80,000 pounds and the ODOT WMT Table B contains the per mile rates for heavy vehicles between 80,000 and 105,500 pounds. Vehicles weighing more than 105,500 pounds pay the RUAF.

The WMT revenues and revenue attribution are calculated by multiplying the WMT tax rate by the WMT evasion-adjusted WMT VMT. Increasing the WMT tax rates will increase the share of revenue for heavy vehicles (vehicles over 26,000 pounds) and increase the heavy vehicle equity ratio. The WMT rate structure will affect the equity ratios for individual weight classes within the heavy vehicle group.

Vehicle Registration Fees: dollars per year

The Oregon Department of Motor Vehicles (DMV) registers most vehicles, with the exception of heavy vehicles (over 26,000 pounds), which must register with the Motor Carrier Transportation Division (MCTD). Vehicle registration fee schedules can be found at the DMV website and the Tractor, Truck, and Buses Registration Fee Schedule can be found at the MCTD website. All registration fees are entered as dollars per year on the *Revenues* and *Alt Revenues* tabs.

Normal Vehicle Registration (Normal Reg) Current normal registration for basic vehicles (under 8,000 pounds) is $84 for a two-year registration ($43 per year). The MCTD Registration Fee Schedule is used for vehicles 10,000 pounds and up.

Farm Vehicle Registration (Farm Reg) Certified farm operation vehicles have their own registration schedule ("Fee Schedule: Trucks Registered as Farm Vehicles").

Tow Truck Registration (Tow Reg) The fee schedule for tow/recovery vehicles is used for tow trucks under 26,000 pounds, and the registration fee entered in the *Revenues* and

Alt Rates tabs should exclude the tow truck certificate fee. Tow trucks weighing more than 26,000 pounds must register with and pay registration fees according to the MCTD.

Charitable Non-Profit Registration (CN Reg) per year registration fee. Charitable Non-Profits pay registration fees following the DMV "Fee Schedule For Charitable, Non-Profit and Manufactured Structure Moter Vehicles." This fee schedule includes vehicles up to 105,500 pounds.

E-Plate Registration (E-Plate Reg) per year registration fee. Publicly owned vehicles pay a one-time registration fee of $2. It is assumed that the life of a publicly owned vehicle is five years, thus the annual amount for registration fees is set equal to $0.40 per year in the 2011 HCAS.

Light Trailer Registration (LT Reg) The per year registration fee paid by light trailers weighing less than 26,001 pounds.

Heavy Trailer Registration (HT Reg) The per year registration fee paid by heavy trailers weighing more than 26,000 pounds.

Title Fee: dollars per title transaction

A title fee is paid upon first-time purchase and registration of a vehicle in Oregon. As of January 2011 there were two different title fees depending on vehicle class. The title fee for vehicles weighing under 26,000 pounds was $77 and the fee for vehicles above 26,000 pounds was $90. The title fee revenue control total amount is attributed to the vehicle classes based on VMT at each weight class and the Title Fee.

RUAF: dollars per mile

The Road Use Assessment Fee is a flat rate entered as dollars per equivalent single-axle load (ESAL) by weight class from the RUAF fee schedule. The RUAF rate is applied to the RUAF VMT by weight class, which are tabulated from the base year RUAF collection reports. For a given weight class, the RUAF rates decrease as the number of axles increases because the vehicle weight is being distributed over more axles, causing less road damage.

Flat Fee: monthly flat fee paid by flat fee commodity hauler

Flat fee rates apply to carriers hauling chips, sand and gravel, or logs. These carriers pay per month according to their loaded operating weight. The Flat Fee rates are entered as dollars per month. The VMT per month and axle share are based on the base year flat fee report data and are used to determine the WMT revenue from flat fee haulers in the "as-if" revenue calculation.

Under the current flat fee rates, log haulers may pay $7.59 per 100 pounds, sand and gravel haulers may pay $7.53 per 100 pounds, and wood chip haulers may pay $30.65 per 100 pounds. Flat fee rates apply to vehicles hauling log, sand and gravel, or chips that are over 26,000 pounds, with the monthly rate calculated as the flat fee rate paid by a hauler operating at the mid-point for the weight category (weight class plus 999 pounds).

Alt Rate Output Tabs

The alternative rate analysis results are displayed in three purple output tabs: *Alt Equity, Alt Revenues,* and *Alt Summary*.

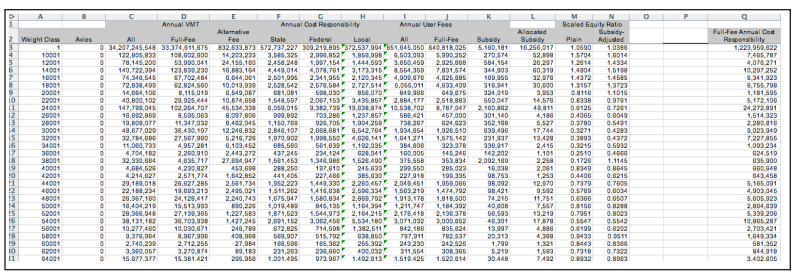

	A	B	C	D	E	F	G	H	I	J	K	L	M	N	O	P	Q
1				Annual VMT			Annual Cost Responsibility			Annual User Fees			Scaled Equity Ratio				
2	Weight Class	Axles	All	Full-Fee	Alternative Fee	State	Federal	Local	All	Full-Fee	Subsidy	Allocated Subsidy	Plain	Subsidy-Adjusted			Full-Fee Annual Cost Responsibility
3	1	0	34,207,245,548	33,374,811,875	832,833,673	372,737,227	309,219,895	372,537,904	651,645,050	640,818,025	5,160,181	16,256,017	1.0590	1.0398			1,223,959,822
4	10001	0	122,805,833	108,002,600	14,203,233	3,685,325	2,996,852	1,859,998	6,503,093	5,990,252	270,574	52,898	1.5704	1.0014			7,466,787
5	12001	0	78,145,200	53,990,041	24,155,160	2,458,248	1,997,154	1,444,503	3,650,459	2,925,898	584,154	26,297	1.2814	1.4334			4,076,271
6	14001	0	140,722,394	123,839,230	16,883,164	4,449,014	4,078,761	3,173,315	8,554,359	7,831,574	344,903	60,319	1.4904	1.5198			10,207,252
7	16001	0	74,348,545	67,702,484	6,644,061	2,501,995	2,341,955	2,120,345	4,909,676	4,825,685	169,955	32,978	1.4372	1.4585			6,341,923
8	18001	0	72,898,499	62,924,560	10,013,939	2,528,542	2,576,564	2,727,514	5,355,011	4,833,409	316,941	30,600	1.3167	1.3723			6,755,798
9	20001	0	14,884,108	8,115,019	6,549,087	681,081	588,030	856,070	849,868	849,875	324,219	3,953	0.8118	1.1015			1,181,595
10	22001	0	40,800,102	29,925,444	10,874,658	1,548,597	2,067,153	3,435,857	2,884,177	2,518,893	550,047	14,576	0.8338	0.9761			5,172,106
11	24001	0	147,799,045	102,264,707	45,534,338	6,059,015	9,382,739	19,938,874	10,538,702	8,797,047	2,160,862	49,811	0.6125	0.7261			24,272,891
12	26001	0	16,692,869	8,595,003	8,097,866	999,892	703,286	1,237,857	586,421	457,000	301,140	4,186	0.4085	0.6049			1,514,323
13	28001	0	19,809,077	11,347,032	8,462,045	1,150,769	926,705	1,904,258	738,267	624,823	352,168	5,527	0.3790	0.5491			2,280,816
14	30001	0	48,677,029	38,430,197	12,246,832	2,846,107	2,688,981	6,542,704	1,934,864	1,926,510	639,496	17,744	0.3271	0.4283			9,023,949
15	32001	0	32,784,686	27,567,960	5,216,726	1,970,902	1,998,550	4,626,141	1,641,271	1,575,142	231,937	13,428	0.3893	0.4372			7,227,855
16	34001	0	11,060,733	4,957,281	6,103,452	685,560	561,839	1,192,035	384,806	323,378	336,917	2,415	0.3215	0.5932			1,093,234
17	36001	0	4,724,182	2,260,910	2,443,272	437,245	234,124	628,941	160,005	145,248	142,232	1,101	0.2510	0.4688			624,519
18	38001	0	32,330,684	4,035,717	27,694,947	1,561,453	1,348,985	1,526,495	375,558	353,834	2,092,189	2,258	0.1726	1.1145			635,900
19	40001	0	4,684,526	4,235,827	453,699	288,250	197,910	245,633	299,550	285,023	16,039	2,061	0.8349	0.8845			660,848
20	42001	0	4,214,627	2,571,774	1,642,852	441,405	227,468	385,639	227,918	199,335	98,753	1,253	0.4408	0.8215			643,458
21	44001	0	29,189,018	26,627,286	2,561,734	1,952,223	1,449,332	2,260,457	2,048,451	1,959,066	98,092	12,970	0.7379	0.7605			5,165,091
22	46001	0	22,188,234	19,693,213	2,495,021	1,311,262	1,416,638	2,586,334	1,583,210	1,474,792	98,421	9,592	0.5769	0.8034			4,903,045
23	48001	0	26,367,190	24,126,417	2,240,743	1,675,947	1,580,834	2,869,792	1,913,178	1,818,500	74,215	11,751	0.6366	0.8507			5,006,923
24	50001	0	16,494,219	15,513,993	899,226	1,019,489	845,135	1,164,368	1,211,747	1,184,392	40,008	7,557	0.8156	0.8288			2,864,839
25	52001	0	28,366,948	27,199,365	1,227,583	1,871,623	1,544,973	2,164,215	2,176,418	2,136,378	66,593	13,219	0.7951	0.8023			5,339,206
26	54001	0	38,131,182	36,703,938	1,427,245	2,691,152	3,062,456	5,534,165	3,071,032	3,000,852	46,301	17,978	0.5547	0.5542			10,865,287
27	56001	0	10,277,490	10,030,871	246,789	672,825	714,598	1,382,511	842,186	835,624	13,997	4,888	0.8199	0.8202			2,703,421
28	58001	0	9,376,984	8,967,996	408,988	569,907	515,792	838,850	797,911	782,637	20,313	4,368	0.9433	0.8511			1,649,394
29	60001	0	2,740,239	2,712,255	27,984	186,598	165,392	255,392	243,230	242,526	1,799	1,321	0.8443	0.8388			581,352
30	62001	0	3,380,057	3,273,874	89,183	231,293	236,660	400,032	311,564	308,365	5,219	1,693	0.7318	0.7322			844,918
31	64001	0	15,677,377	15,381,421	295,956	1,001,495	973,987	1,492,613	1,519,425	1,520,614	30,448	7,492	0.8932	0.8983			3,402,605

Alt Equity

The *Alt Equity* tab displays the Annual VMT, Annual Cost Responsibility, Annual User Fees,

and Scaled Equity Ratio by weight and axle class for the alternative rate analysis. The *Alt Equity* tab refers to the *Master VMT, Alt Revenues,* and *Allocated Costs* tabs.

Alt Revenues

The *Alt Revenues* tab contains model output of the attributed revenues by major revenue instrument for each weight and axle class. The Alt Revenues are summed to produce Annual User Fees in the *Alt Equity* and *Alt Summary* tabs.

	A	B	C	D	E	F	G	H	I	J	K	L
1	Weight Class	Axles	Gas Tax	Diesel Tax	VMT Tax	WMT	Flat Fee	RUAF	Registration	Other MC	Subsidy	Full Fee VMT
2	1	0	938,499,767	66,121,477	0	0	0	0	298,668,856	0	10,320,362	33,374,611,675
3	10,001	0	5,366,401	2,953,513	0	0	0	0	4,886,272	0	541,148	108,602,600
4	12,001	0	2,848,419	1,807,122	0	0	0	0	2,845,367	0	1,168,309	53,990,041
5	14,001	0	6,519,773	4,099,050	0	0	0	0	6,519,896	0	689,807	123,839,230
6	16,001	0	3,663,743	2,267,716	0	0	0	0	3,887,894	0	339,911	67,702,484
7	18,001	0	3,605,321	2,428,467	0	0	0	0	4,076,234	0	633,882	62,824,560
8	20,001	0	403,629	860,198	0	0	0	0	936,106	0	648,038	8,115,019
9	22,001	0	2,177,007	1,223,824	0	0	0	0	2,367,524	0	1,100,093	29,925,444
10	24,001	0	4,300,538	6,121,470	0	0	0	0	8,855,397	0	4,321,724	102,264,707
11	26,001	0	710,731	111,230	0	180,419	0	0	158,921	11,540	602,280	8,595,063
12	28,001	0	717,164	117,867	0	405,023	2,859	0	209,181	24,441	704,335	11,347,032
13	30,001	0	2,106,524	215,086	0	1,112,882	0	0	370,752	64,264	1,278,992	36,430,197
14	32,001	0	103,694	101,799	0	2,425,153	0	0	517,880	134,016	463,874	27,567,960
15	34,001	0	122,467	40,947	0	453,046	0	0	128,654	24,099	673,835	4,957,281
16	36,001	0	17,208	18,116	0	217,364	0	0	56,331	10,991	284,404	2,280,910
17	38,001	0	33,859	43,565	0	462,413	0	0	188,744	22,539	4,184,337	4,835,717
18	40,001	0	18,094	17,843	0	437,298	0	0	105,298	20,567	32,075	4,230,827
19	42,001	0	35,481	34,176	0	275,591	0	0	98,085	12,502	197,507	2,571,774
20	44,001	0	59,626	163,708	0	2,949,504	1,430	0	795,190	129,443	196,184	26,827,285
21	46,001	0	41,966	167,901	0	2,252,510	10,820	0	557,907	95,734	196,842	19,693,213
22	48,001	0	37,012	136,571	0	2,851,280	55,933	0	628,294	117,288	148,430	24,126,417
23	50,001	0	3,743	70,654	0	1,901,240	5,081	0	367,359	75,418	81,215	15,513,993
24	52,001	0	7,487	100,191	0	3,449,885	9,416	0	654,125	131,932	113,187	27,139,365
25	54,001	0	4,254	93,402	0	4,839,781	60,733	0	965,465	178,428	92,602	36,703,938
26	56,001	0	473	15,463	0	1,377,913	3,145	0	238,616	48,762	27,994	10,030,671
27	58,001	0	1,779	30,951	0	1,298,183	10,870	0	221,169	43,598	40,698	8,867,998

Alt Summary

The *Alt Summary* tab displays the summary results of the annual model VMT, annual cost responsibility, annual user fees, the subsidy and allocated subsidy, and the equity ratios by aggregated major vehicle weight class for the alternative rate analysis.

Alternative Fee Analysis Case Studies

This section illustrates three different alternative rate analyses. For each case study a step-by-step explanation of how to conduct the analysis is provided, followed by a description of the impact of the rate changes on the vehicle equity ratios.

The first case study increases the gas and diesel tax from $0.30 per gallon to $0.36 per gallon. The second case study increases the basic vehicle registration fee by $11, or roughly 25 percent. The third case study imposes a new VMT tax of $0.0293 per mile, repealing the state fuel tax. The second case study illustrates the effect of a change in a single revenue instrument, while the first and third case studies involve changes to more than one revenue instrument. The net effect of an analysis of two or more revenue instrument rate changes will depend on the relative magnitude of the change to each revenue instrument rate and which vehicle class revenues are affected.

Case Study A: Change in Gas Tax

This case study considers an increase in the gas and diesel tax from the current rate of $0.30 per gallon to $0.36 per gallon—a six-cent increase. Only the gas and diesel tax rates are increased; other revenue instrument rates remain at their current (2011 HCAS) rates.

Follow these steps for an alternative rate analysis of an increase in the gas and diesel tax rates:

1. In the *Alt Rates* tab, copy the current rates using the "Copy Current Rates" button.
2. In the Gas Tax column (column "C" beginning in row 21) enter 0.36 for each weight class. This step specifies the alternative gas tax rate of $0.36 per gallon.
3. In the Diesel Tax column (column "D" beginning in row 21) enter 0.36 for each weight class. This step specifies the alternative diesel tax rate of $0.36 per gallon.
4. Go to the *Control* tab (left-most tab in the HCAS Model workbook). Click the "Recalculate" button to run the model using the new gas and diesel tax rates specified in the *Alt Rates* tab.

5. View the alternative rate analysis results in the *Alt Equity, Alt Revenues,* and *Alt Summary* tabs.

The revenue in the *Alt Revenues* tab will now reflect the increase in the gas and diesel tax rates.

Comparing the *Equity* tab output to the *Alt Equity* tab output, one can see that the VMT and Cost Responsibility for each weight class have not changed. Only the Attributed Revenues (Annual User Fees) have changed. Because the change in the attributed revenues has also changed the revenue shares, the equity ratios will reflect the shift in the share of revenues attributed to the vehicle classes.

Table 4 compares the gas tax revenue, diesel tax revenue, and other revenue for the 2011 HCAS model and the Gas Tax/Diesel Tax Alternative Analysis. Both the gas tax and diesel tax revenues have increased by 20 percent (a six cent increase in the $0.30 per gallon fuel tax rate is a 20 percent increase) in the alternative rate analysis, and total revenues have increased by 9.5 percent as a result of the gas and diesel tax rate increases.

In the 2011 HCAS, the basic vehicle equity share is 0.9954. The basic vehicle equity share in the alternative rate analysis (found in the *Alt Summary* tab after recalculating the model with the alternative rates) is 1.0363 (see Table 5). The basic vehicle equity share increases because the net effect of the gas and diesel tax increase is an increase in the basic vehicle revenue share, which in turn increases the basic vehicle equity ratio.

Table 4: Comparison of Annual Revenues from an Alternative Rate Analysis of an Increase in the Gas and Diesel Tax Rates (thousands of dollars)

Revenue Source	HCAS 2011 Final	Alternative Rate Analysis	Difference in Revenues	Percent Change in Revenues
Gas Tax Revenues	493,090	591,708	98,618	20%
Diesel Tax Revenues	42,798	51,357	8,560	20%
Other Revenues	590,345	590,345	0	0%
Total Revenue	1,126,232	1,233,410	107,178	9.5%

Table 5: Comparison of Revenue Shares and Equity Ratios for Gas and Diesel Tax Case

Weight Class	Share of Annual User Fees		FF Subsidy-Adjusted Equity Ratio	
	HCAS 2011	Alternative	HCAS 2011	Alternative
1 to 10,000	65.73%	68.42%	0.9954	1.0363
10,001 and up	34.27%	31.58%	1.0089	0.9295

Case Study B: Change in Registration Fee

In the second case study, a change in registration fees, we consider increasing the normal registration fee for basic vehicles from $43 to $54 per year.

Perform an alternative rate analysis of a change in the Normal Registration Fee by following these steps:

1. In the *Alt Rates* tab, copy the current rates using the "Copy Current Rates" button.
2. In the Normal Reg column (column G beginning in row 21), enter 54 for Weight Class 1. This step specifies the alternative registration fee of $54 per year for basic vehicles (vehicles under 10,000 pounds).
3. Go to the *Control* tab and click the "Recalculate" button to recalculate the model output using the new registration fee specified in the *Alt Rates* tab.
4. View the alternative rate analysis results in the *Alt Equity, Alt Revenues,* and *Alt Summary* tabs.

Because the registration fee paid by basic vehicles increases while all other rates are held constant, the basic vehicle share of revenues increases, in turn increasing the basic vehicle equity ratio. Because the heavy vehicle class revenues remain unchanged, the heavy vehicle

revenue share declines from 34.27 percent to 33.15 percent, as shown in Table 6.

Table 6: Comparison of Revenue Shares and Equity Ratios for Basic Vehicle Registration Fee Case

Weight Class	Share of Annual User Fees		FF Subsidy-Adjusted Equity Ratio	
	HCAS 2011	Alternative	HCAS 2011	Alternative
1 to 10,000	65.73%	66.85%	0.9954	1.0123
10,001 and up	34.27%	33.15%	1.0089	0.9761

Case Study C: Implementation of VMT Tax

The third case study evaluates the impact of the implementation of a vehicle-mile-traveled (VMT) tax and the repeal of the gas and diesel tax.

Perform an alternative rate analysis of a new VMT tax and repeal of the gas and diesel tax by following these steps:

1. In the *Alt Rates* tab, copy the current rates using the "Copy Current Rates" button.
2. In the Gas Tax and Diesel Tax columns (columns C and D beginning in row 21), enter 0 for all weight classes. This step sets the gas and diesel tax rates to zero.
3. In the VMT Tax column (column E, beginning in row 21), enter 0.0293 for all weight classes. This step sets the VMT tax rate to $0.0293 per mile (2.93 cents per mile).
4. Go to the *Control* tab (left-most tab in the HCAS Model workbook). Click the "Recalculate" button to run the model using the new VMT tax specified in the *Alt Rates* tab.
5. View the alternative rate analysis results in the *Alt Equity, Alt Revenues,* and *Alt Summary* tabs.

A VMT tax rate of $0.0293 per mile produces average annual revenues of approximately $563.1 million. Basic vehicle full-fee revenue share increases to 75.8 percent in the alternative rate analysis from 65.7 percent in the current model.

A VMT tax rate of $0.0293 per mile is roughly equal to the effective fuel tax rate paid for vehicles with fuel efficiency of 10.5 MPG. Since the majority of the vehicle miles traveled by vehicle tax classes paying the gas and diesel tax are by basic vehicles, in the model assumed to have closer to 20 MPG, the revenues from a VMT tax of $0.0293 per mile are greater than the fuel taxes generated from a $0.30 per gallon fuel tax. Thus, the basic vehicle revenues and equity share increase as shown in Table 7.

Table 7: Comparison of Revenue Shares and Equity Ratios for VMT Tax Case Study

Weight Class	Share of Annual User Fees		FF Subsidy-Adjusted Equity Ratio	
	HCAS 2011	Alternative	HCAS 2011	Alternative
1 to 10,000	65.73%	75.88%	0.9954	1.1494
10,001 and up	34.27%	21.12%	1.0089	0.7098

Appendix E

2013 HCAS Model Documentation

The full source code for the 2013 Oregon Highway Cost Allocation Model is included with the model distribution. The model is contained within a class that can be run by Excel as an Active-X module and each of the class methods within it can be called from within Excel.

This document begins with a description of the Visual Basic for Applications (VBA) routine that runs when the "Recalculate" button on the *Control* tab of the HCASModel.xls workbook is pressed. The routine makes a series of calls to the Active-X module, sending data from Excel and then retrieving calculated results back and pasting them into worksheets.

This document then provides a detailed description of each of the class methods that are called by the VBA routine, explaining the calculations and describing the internal data structures they use.

Figure 1 shows a graphical representation of the overall model, including the Excel workbooks, the VBA within the model workbook, the external code module, and the external data files.

Figure 1: Oregon Highway Cost Allocation Model

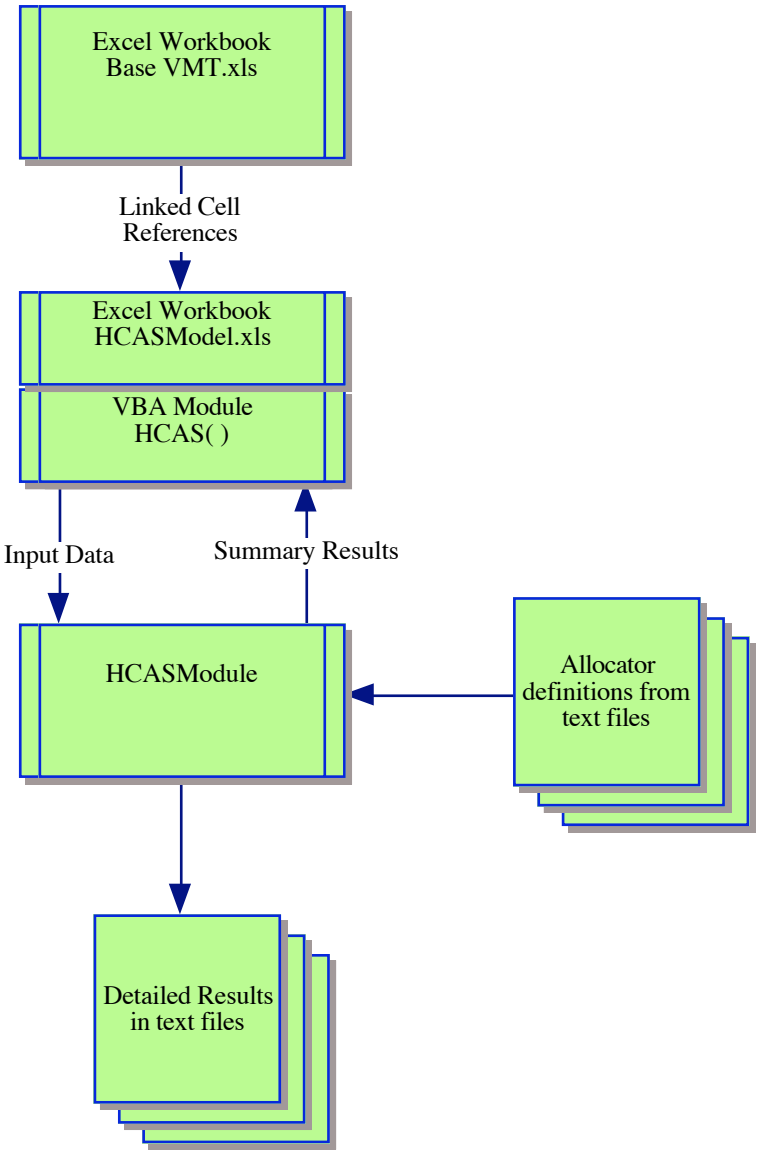

Description of Model Calculation Operations

The following describes what happens when the "Recalculate" button is pressed. The "Recalculate" button is connected to the HCAS() subroutine in the workbook's VBA module. That subroutine is described line-by-line here. These lines are always executed in the order shown and every line is executed with every recalculation.

Initialization

```
Sub HCAS()

    ChDrive (ActiveWorkbook.Path)

    ChDir (ActiveWorkbook.Path)

    Set HCASModel = CreateObject("HCASModule")
```

The first two lines of the HCAS() routine allow the model to work if the workbook was opened by double-clicking the workbook file. They set Excel's path to the drive and directory where the workbook resides, assuming that HCASModule.py and the text files it needs are located in the same directory.

The third line loads the HCASModule into memory. When the HCASModule loads, it runs its initialization methods. Those methods read in data from seven text files. These data are:

SeedData. Used to populate a preliminary VMT Master table for iterative proportional fitting (described below).

AxleShares. Developed from Special Weighings data to describe the share of each weight class with each possible number of axles (nine or more axles are coded as nine-plus).

SimpleFactors. A vector of factors to be multiplied by VMT for simple allocators (different weight groupings of VMT). These factors are mostly zeros and ones, reflecting the definition of the allocator. For example, the Under26 factor is one for all weight classes up to 26,000 pounds and zero for all weight classes over 26,000 pounds.

PaveFactors. Cost responsibility factors (by weight class, functional class, and number of axles) for wear and tear of flexible and rigid pavement projects. These factors are produced by the NAPHCAS-OR model (the Oregon version of the new National Pavement Cost Model for Highway Cost Allocation developed by Roger Mingo).

PCEFactors. Passenger car equivalents (by weight class, functional class, and number of axles) for vehicles on regular, uphill, and congested roadways. These factors represent the amount of roadway capacity a single vehicle of a particular weight class takes up as a proportion of the capacity consumed by a basic vehicle. These factors were developed from the results of a special study conducted as a part of the 1997 Federal Highway Cost Allocation Study.

DeclaredOperating. Shares of vehicles in each declared weight class operating at each operating weight class. These data were developed from the Weigh-in-Motion data.

DeclaredRegistered. Shares of vehicles in each declared weight class that are registered in each registered weight class. These data were developed from Motor Carrier and DMV registration data.

BasicSharePeak. The basic-vehicle share of peak-hour VMT for each functional class. These data were developed from automatic traffic recorder data.

Send Base-Year VMT Data and Retrieve Model-Year VMT Data

```
Call HCASModel.setGrowthRates([GrowthRates].Value)

Call HCASModel.setVMTByFC([VMTByFC].Value)

Call HCASModel.setBaseVMT([BaseVMT].Value)

Call HCASModel.setEvasion([Evasion].Value)
```

The next four lines send input data from the workbook to the HCASModule so that it can calculate model-year VMT.

Growth rates, from the *VMT Growth* tab, tell the model how fast VMT in each weight class is expected to grow between the base year (the most recent calendar year for which data are available) and the model year (the calendar year in the middle of the fiscal biennium being modeled).

VMT by functional class, from the *VMT by FC* tab, provides control totals for base-year VMT in each functional class.

Base VMT, from the *BASE VMT* tab, provides base-year VMT by weight class and tax class.

Evasion rates, from the *Revenues* tab, tell the model what evasion and avoidance rates to assume. Evasion and avoidance are combined.

```
vmtMaster = HCASModel.makeVMTMaster()

Sheets("VMT Master").Activate

[A3:D5117].Value = vmtMaster

modelVMT = HCASModel.makeVMTByVehicles()

Sheets("Model VMT").Activate

[A3:AB99].Value = modelVMT
```

The call to makeVMTMaster() tells the model to do its VMT calculations and send back a portion of the Master VMT table, which is pasted into the *VMT Master* tab. The call to makeVMTByVehicles() tells the model to calculate model-year VMT by weight and tax class and send those back, where they are pasted into the *Model VMT* tab.

Send Costs to Allocate and Retrieve Allocated Costs

```
Call HCASModel.setPath([Path].Value)
```

The path, defined in the *Policy* tab, defines the set of allocators to be applied to each work type. Each work type may have up to two allocators. If there are two, the proportion of costs in that work type to which each will be applied is also defined in the path. The proportions must add up to one.

```
Call HCASModel.setProjectCosts([ProjectCosts].Value)
```

```
Call HCASModel.setNonProjectCosts([NonProjectCosts].Value)

Call HCASModel.setLocalCosts([LocalCosts].Value)
```

The next three lines send costs to allocate to the model from the *Project Costs*, *Non-Project Costs*, and *Local Costs* tabs. Items (rows) in the lists of costs to allocate include information about the funding source, work type, functional class, and dollar amount. Project costs also include the bridge type, which is zero if not a bridge project.

```
Call HCASModel.setStuddedTire([StuddedTire].Value)
```

The next line sends studded-tire adjustments from the *Studded Tires* tab. These move costs from their original combination of funding source and work type into the studded tire work type with the same funding source.

```
Call HCASModel.setBridgeFactors([BridgeFactors].Value)
```

The next line sends bridge factors from the *Bridge Splits* tab. These factors are used to reassign bridge costs from their original work types to incremental cost work types so that incremental allocators may be applied. There will be a set of factors for each bridge type.

```
Call HCASModel.setBondFactor([BondFactor].Value)

Call HCASModel.setBiennium([Biennium].Value)
```

The next two lines send information necessary for the proper treatment of the expenditure of bond revenues. Both come from the *Control* tab.

```
Call HCASModel.setSummaryWorkTypes([SWT].Value)

Call HCASModel.setSummaryWeightClasses([SWC].Value)
```

The next two lines send information from the *Codes* tab that allows the model to tabulate allocated costs by summary work type and summary weight class for the report tables. These tabulations are done in the model, rather than the workbook, because it is faster, more reliable, and keeps the workbook size reasonable.

```
allocatedCosts = HCASModel.allocateCosts()

Sheets("Allocated Costs").Activate

[A3:I343].Value = allocatedCosts
```

The call to allocateCosts() tells the model to allocate costs and return the allocated costs by weight class and funding source, which are then pasted into the *Allocated Costs* tab.

Send Revenues and Rates and Retrieve Attributed Revenues

```
Call HCASModel.setRevenueTotals([RevenueTotals].Value)

Call HCASModel.setRates([Rates].Value)

Call HCASModel.setRUAFRates([RUAFRates].Value)

Call HCASModel.setFFRates([FFRates].Value)
```

The next four lines send information from the *Revenues* tab to the model. Revenue totals are the control totals by instrument from the budget. Rates are for instruments that vary by weight class (e.g., weight-mile tax rates) or not at all (e.g., fuel taxes). The two other types of rates have different dimensions, so are sent separately. RUAF rates extend to a much longer list of weight classes. Flat fee rates are by commodity and include information

about the average miles per month for each weight class and the distribution of VMT in each weight class to numbers of axles for weights over 80,000 pounds.

```
Call HCASModel.setMPG([MPG].Value)
```

The next line sends estimated miles per gallon by operating weight class from the *MPG* tab.

```
attributedRevenues = HCASModel.attributeRevenues()

Sheets("Attributed Revenues").Activate

[A1:K342].Value = attributedRevenues
```

The call to attributeRevenues() tells the model to attribute revenues and return the attributed revenues by weight class and revenue instrument, which are then pasted into the *Attributed Revenues* tab.

```
adjustedMPG = HCASModel.getAdjustedMPG()

Sheets("MPG").Activate

[D3:E100].Value = adjustedMPG
```

The call to getAdjustedMPG() tells the model to return the adjusted miles per gallon (already calculated as part of the revenue attribution calculations), which are then pasted into the "MPG" tab to the right of the initial MPG estimates. The initial estimates are adjusted to allow fuel tax revenues to add up the revenue control totals for fuel taxes.

Retrieve Summary Tabulations for Report Tables

```
AllocatedCostsbySWT = HCASModel.getAllocatedCostsByWorkType()

Sheets("Allocated Costs by SWT").Activate

[B3:J171].Value = AllocatedCostsbySWT
```

The call to getAllocatedCostsByWorkType() tells the model to send allocated costs by summary work type, funding source, and summary weight class, which are then pasted into the *Allocated Costs by SWT* tab.

```
CostsToAllocatebySWT = HCASModel.getCoststoAllocate()

Sheets("Costs to Allocate by SWT").Activate

[B3:I27].Value = CostsToAllocatebySWT
```

The call to getCostsToAllocate() tells the model to return costs to allocate by summary work type and funding source, which are then pasted into the *Costs to Allocate by SWT* tab.

Retrieve Scaled Allocation Vectors

```
AllocationVectors = HCASModel.getAllocationVectors()

Sheets("Allocation Vectors").Activate

[A2:T5117].Value = AllocationVectors
```

The call to getAllocationVectors tells the model to return the scaled allocation vectors. These are the allocation vectors after they have been weighted by model-year VMT and then scaled so they add up to one. They are pasted into the *Allocation Vectors* tab.

Send Alternative Rates and Retrieve Attributed Alternative Revenues

```
Call HCASModel.setAltRates([AltRates].Value)

Call HCASModel.setAltRUAFRates([AltRUAFRates].Value)

Call HCASModel.setAltFFRates([AltFFRates].Value)
```

The next three lines send alternative rates from the *Alt Rates* tab to the model. These alternative rates are used for policy analysis to test the effect on equity of proposed changes to revenue instruments. They do not require changes to revenue control totals, because they use the calibrated miles per gallon and miles per registration from the original revenue attribution calculations, which were calculated from the control totals and rates provided there.

```
attributedRevenues = HCASModel.attributeAltRevenues()

Sheets("Alt Revenues").Activate

[A1:L342].Value = attributedRevenues
```

The call to attributeAltRevenues() tells the model to attribute revenues using the alternative rate schedules and return results by weight class and revenue instrument. Those are pasted into the *Alt Revenues* tab.

```
Sheets("Summary").Activate
```

The last line of the HCAS() routine leaves the workbook with the *Summary* tab open so the user can see the summary results of the model run.

Table 1 describes the input ranges in various tabs of the HCASModel.xls workbook, listing the input range name, the tab it is located in, the data it contains, the units those data are in, the class method that moves the data to the external model code, and the name of the data structure in the external model code that accepts the data.

Table 2 describes the tab-delimited text files that contain input data for the external model code, listing the file name, what data each contains, the units the data are in, and the data structure in the external model code that accepts the data.

Table 3 describes the outputs from the external model code that are sent back to the HCASModel.xls workbook, listing the data structure in the external model code from which the data are extracted, the method called to calculate and retrieve the data, the tab into which the data are pasted, the upper-left corner of the cell range into which the data are pasted, and the contents of the data.

Table 4 describes the tab-delimited text files that are written when the external model code runs, listing the data structure in the external model code from which the data are extracted, the method called to calculate and write the data, the file names, and the contents of the data.

Table 1 Input Ranges

Excel Range	Tab	Contains	Units	Method to Send to Model	Model Data Structure
GrowthRates	VMT Growth	VMT growth rates	annual growth rate (e.g., 0.05 means 5% per year)	setGrowthRates()	self.growthRates
VMTByFC	VMT by FC	VMT by functional class and ownership	Base-year vehicle-miles traveled	setVMTByFC()	self.VMTbyFC
BaseVMT	Base VMT	Base-year VMT by weight class and tax class	Base-year vehicle-miles traveled	setBaseVMT()	self.baseVMT
Evasion	Revenue	assumptions for gas-tax avoidance, use-fuel tax evasion and avoidance, weight-mile tax evasion, share of basic VMT that burn diesel, registration rate per mile for RUAF vehicles, share of RUAF vehicles registered at 78,001-80,000 lbs, share of RUAF vehicles registered at 96,001-98,000 lbs, share of RUAF vehicles registered at 104,001-105,500 lbs, percent of flat-fee log truck miles that are empty, declared weight for empty log trucks	all are shares (e.g., 0.05 means 5%) except RUAF Registration Rate is in dollars per mile traveled and Empty Log Weight is in pounds	setEvasion()	self.gasEvasion, self.dieselEvasion, self.wmtEvasion, self.basicDiesel, self.ruafRegRate, self.ruafReg78, self.ruafReg96, self.ruafReg104, self.emptyLogPercent, self.emptyLogWeight
Path	Policy	Allocator(s) to use for each work type	names of allocators and shares	setPath()	self.path
ProjectCosts	Project Costs	Costs to allocate for construction projects	biennial dollars	setProjectCosts()	self.projectCosts
NonProjectCosts	Non-Project Costs	Other costs to allocate	biennial dollars	setNonProjectCosts()	self.nonProjectCosts
LocalCosts	Local Costs	Local-government costs to allocate	biennial dollars	setLocalCosts()	self.localCosts
StuddedTire	Studded Tires	Studded-tire adjustments	biennial dollars	setStuddedTire()	self.studdedTire
BridgeFactors	Bridge Splits	Incremental factors for bridge work types	shares	setBridgeFactors()	self.bridgeFactors
BondFactor	Control	Proportion of bonded expenditures to allocate in a biennium	share	setBondFactor()	self.bondFactor
Biennium	Control	First year of model biennium	four-digit year	setBiennium()	self.biennium
SWT	Codes	Definitions of summary work types	work type codes	setSummaryWorkTypes()	self.summaryWorkTypes
SWC	Codes	Definitions of summary weight classes	pounds	setSummaryWeightClasses()	self.summaryWeightClasses
RevenueTotals	Revenue	Control totals for revenues by instrument	biennial dollars	setRevenueTotals()	self.revenueTotals
Rates	Revenue	Current-law rates except RUAF and flat fee	dollars per whatever	setRates()	self.rates
RUAFRates	Revenue	Current-law RUAF rates	dollars per mile	setRUAFRates()	self.RUAFRates
FFRates	Revenue	Current-law flat fee rates	dollars per month, miles per month, and shares	setFFRates()	self.flatfee
MPG	MPG	Assumed miles per gallon	miles per gallon	setMPG()	self.MPG
AltRates	Alt Revenues	Alternative rates except RUAF and flat fee	dollars per whatever	setAltRates()	self.altRates
AltRUAFRates	Alt Revenues	Alternative RUAF rates	dollars per mile	setAltRUAFRates()	self.altRUAFRates
AltFFRates	Alt Revenues	Alternative flat fee rates	dollars per month, miles per month, and shares	setAltFFRates()	self.altFlatfee

Table 2 Input Text Files

Text File	Contains	Units	Model Data Structure
SeedData.txt	Used to populate a preliminary VMT Master table (VMTdata) for iterative proportional fitting (see below). Any seed values (except zeros) could be used to generate fitted results, but this particular set already contains data that reflect the relative proportions of different vehicle types on different functional classes, and so will produce a distribution that not only adds up to the correct totals for each weight class and each combination of functional class and ownership, but also reflects the fact that some functional classes carry higher proportions of heavy vehicles than others. There are five columns: facility class (combines functional class and ownership), functional class, ownership, weight class, axles, and VMT. The first four are keys.	unitless numbers	self.seedData
AxleShares.txt	Contains the shares of vehicles weighing more than 105,500 pounds with each number of axles (5 to 9+) by weight class. These data are developed from Special Weighings data. There are three columns: weight class, axles, and share. The first two are keys	shares (e.g., 0.5 means 50%)	self.shares
SimpleFactors.txt	Contains vectors of factors to be multiplied by VMT for simple allocators (different weight groupings of VMT.) These factors are mostly zeros and ones, reflecting the definition of the allocator. For example, the Under26 factor is one for all weight classes up to 26,000 pounds and zero for all weight classes over 26,000 pounds. There are ten columns: weight class, axles, AllVMT, BasicVMT, Over10VMT, Over26VMT, Over50VMT, Under26VMT, Over80VMT, Over106VMT, Snow, and AllAMT. The first two are keys; the rest are allocators.	shares	self.simpleFactors
PaveFactors.txt	Contains cost responsibility factors (by weight class, functional class, and number of axles) for wear and tear of flexible and rigid pavement projects. These factors are produced by the NAPHCAS-OR model (the Oregon version of the National Pavement Cost Model for Highway Cost Allocation developed by Roger Mingo). There are five columns: facility class (combines functional class and ownership), weight class, axles, flexible, and rigid. The first three are keys.	shares	self.paveFactors
PCEFactors.txt	Contains passenger car equivalents (PCEs) by weight class, functional class, and number of axles for vehicles on regular, uphill, and congested roadways. These factors represent the amount of roadway capacity a single vehicle of a particular weight class takes up as a proportion of the capacity consumed by a basic vehicle. These factors were developed from a study conducted as a part of the 1997 federal highway cost allocation study. There are six columns: facility class (combines functional class and ownership), weight class, axles, regularPCE, UphillPCE, and congestedPCE. The first three are keys.	shares	self.pceFactors
DeclaredRegistered.txt	Contains shares of vehicles in each declared weight class that are registered in each registered weight class. These data were developed from Motor Carrier registration data. There are three columns: declaredWeight, registeredWeight, and share. The first two are keys.	shares	self.declaredRegistered
DeclaredOperating.txt	Contains shares of vehicles in each declared weight class operating at each operating weight class. These data were developed from the Special Weighings data. There are five columns: declared, declaredAxles, operating, operatingAxles, and Share. The first four are keys.	shares	self.declaredOperating
BasicSharePeak.txt	Contains the basic-vehicle share of peak-hour VMT for each functional class. These data were developed from automatic traffic recorder data. There are two columns: functionalClass and share. The first is the key.	shares	self.peakShares
BondsYYYY-YYYY.txt	Contains allocated bonded expenditures from prior studies. Uses such files, if they exist, from the nine most recent prior biennia. Columns are declared weight class, declared number of axles, and dollars. The first two are keys. Actual files will have biennium beginning and ending years in place of "YYYY".	biennial dollars	self.priorBondAmount

Table 3 Outputs

Model Data Structure	Method to Retrieve	Tab	Upper Left	Contains
self.VMTMaster	makeVMTMaster()	VMT Master	A3	Model-year VMT by declared weight class, declared axles, functional class, and ownership
self.vmtByVehicles	makeVMTByVehicles()	Model VMT	A3	Model year VMT by weight class and tax class
self.fullAllocatedCosts	allocateCosts()	Allocated Costs	A3	Allocated costs by declared weight class, declared number of axles, and funding source
attributedRevenues	attributeRevenues()	Attributed Revenues	A1	Attributed revenues by declared weight class, declared number of axles, and revenue instrument
self.adjustedMPG	getAdjustedMPG()	MPG	D3	Calibrated estimates of miles per gallon by weight class
self.fullAllocatedCosts	getAllocatedCostsByWorkType()	Allocated Costs by SWT	B3	Allocated costs by funding source, summary work type, and summary weight class
self.projectCosts, self.nonProjectCosts, self.bondCosts, self.priorBondAmount	getCoststoAllocate()	Costs to Allocate by SWT	B3	Costs to allocate by funding source and summary work type
self.allocators	getAllocationVectors()	Allocation Vectors	A2	Allocation factors used in cost allocation by declared weight class, declared number of axles, and allocator
attributedRevenues	attributeAltRevenues()	Alt Revenues	A1	Attributed alternative revenues by declared weight class, declared number of axles, and revenue instrument

Table 4 Output Text Files

Model Data Structure	Method to Create	Contains	Units	File Name
self.fullAllocatedCosts	allocateCosts()	Contains allocated costs from current and prior bonded expenditures. Columns are funding source, work type, declared weight class, declared number of axles, and dollars. The first four are keys.	biennial dollars	allocatedCosts_bond.txt
self.fullAllocatedCosts	allocateCosts()	Contains allocated costs from the expenditure of federal funds by state government. Columns are funding source, work type, declared weight class, declared number of axles, and dollars. The first four are keys.	biennial dollars	allocatedCosts_federal.txt
self.fullAllocatedCosts	allocateCosts()	Contains allocated costs from the expenditure of federal funds by local government. Columns are funding source, work type, declared weight class, declared number of axles, and dollars. The first four are keys.	biennial dollars	allocatedCosts_local-federal.txt
self.fullAllocatedCosts	allocateCosts()	Contains allocated costs from the expenditure of local funds by local government. Columns are funding source, work type, declared weight class, declared number of axles, and dollars. The first four are keys.	biennial dollars	allocatedCosts_local-other.txt
self.fullAllocatedCosts	allocateCosts()	Contains allocated costs from the expenditure of state funds by local government. Columns are funding source, work type, declared weight class, declared number of axles, and dollars. The first four are keys.	biennial dollars	allocatedCosts_local-state.txt
self.fullAllocatedCosts	allocateCosts()	Not used. This may be ignored.	biennial dollars	allocatedCosts_other.txt
self.fullAllocatedCosts	allocateCosts()	Contains allocated costs from the expenditure of state funds by state government. Columns are funding source, work type, declared weight class, declared number of axles, and dollars. The first four are keys.	biennial dollars	allocatedCosts_state.txt
allocatedBonds	allocateCosts()	Contains allocated bonded expenditures from this study. Will be used for the next nine biennia as an input file. Columns are declared weight class, declared number of axles, and dollars. The first two are keys. Actual file name will have beginning and ending years of the model biennium in place of "YYYY".	biennial dollars	BondsYYYY-YYYY.txt
self.pavement	makeVMTMaster()	Contains pavement factors by facility class, declared weight class, and declared number of axles that are constructed from the raw pavement factors, which are by functional class, operating weight class, and actual number of axles. Columns are facility class, functional class, ownership, declared weight class, declared number of axles, flexible factor, and rigid factor. The first five are keys.	unitless factors	declared_pave_factors.txt
ffRevenue, asifWMTRevenue	allocateCosts()	Reports fees paid by flat-fee vehicles and the fees they would pay if they paid weight-mile tax. The ‘as-if‘ revenue is for comparison is to determine the flat fee difference. As of the 2011 study, flat fee vehicles are not considered alternative fee-paying vehicles. Columns are declared weight class, declared number of axles, log revenue, as-if log revenue, dump revenue, as-if dump revenue, chip revenue, and as-if chip revenue. The first two are keys.	biennial dollars	flat_fee_report.txt
N/A	makeVMTMaster()	Lists any errors encountered while attempting to make pavement factors by facility class, declared weight class, and declared number of axles from raw pavement factors, which are by functional class, operating weight class, and actual number of axles.	N/A	missing_pavement_factors.log
self.VMTMaster	makeVMTMaster()	Contains annual VMT. Columns are functional class, ownership, declared weight class, declared number of axles, and vehicle-miles traveled. The first four are keys.	annual vehicle-miles traveled	VMTMaster.txt
ffRevenue, regRevenue, ruafRevenue, wmtRevenue, gasTaxRevenue, dieselTaxRevenue, asifWMTRevenue	allocateCosts()	Contains calculated subsidies by subsidy type for WMT, Farm Registration, Tow Registration, Charitable Non-Profit Registration and E-Plate Registration for each weight class, and actual number of axles.	biennial dollars	SubsidiesbyVehClass.txt

Detailed Description of Class Methods in the Model

This part of the documentation serves two purposes: it describes in detail how the model does what it does and it provides a guide for following the source code. The class methods are described in the order they appear in the source code, which is the order in which they are called by the VBA subroutine. Line numbers from the version of the code included with the 2013 model distribution are included to facilitate following the source code.

Class Methods for Getting Data Into the Model

The class methods described in this section serve to get data into the HCAS model. Data that are not expected to be changed by the user are read in from tab-delimited text files. Data and assumptions that an analyst is more likely to want to change between model runs are transferred from the Excel workbook that runs the model.

Other class methods, described in later sections, make use of the data and return results to Excel. Some also write additional, more-detailed data to tab-delimited text files.

Note that variables beginning with "self." belong to the class object and are available to any class method to which the self reference has been passed. Other variables are available only within the method that creates them.

The readData() method (line 16) is run during initialization and imports the following data sets from tab-delimited text files, which are expected to be in the same directory as the model:

SeedData.txt is read into self.seedData and used to populate a preliminary VMT Master table (VMTdata) for iterative proportional fitting (see below). Any seed values (except zeros) could be used to generate fitted results, but this particular set already contains data that reflect the relative proportions of different vehicle types on different functional classes, and so will produce a distribution that not only adds up to the correct totals for each weight class and each combination of functional class and ownership, but also reflects the fact that some functional classes carry higher proportions of heavy vehicles than others. There are five columns: facility class (combines functional class and ownership), functional class, ownership, weight class, axles, and VMT. The first four are keys.

AxleShares.txt is read into self.shares and contains the shares of vehicles weighing more than 105,500 pounds with each number of axles (5 to 9+) by weight class. These data are developed from Special Weighings data. There are three columns: weight class, axles, and share. The first two are keys.

SimpleFactors.txt is read into self.simpleFactors and contains vectors of factors to be multiplied by VMT for simple allocators (different weight groupings of VMT). These factors are mostly zeros and ones, reflecting the definition of the allocator. For example, the Under26 factor is one for all weight classes up to 26,000 pounds and zero for all weight classes over 26,000 pounds. There are twelve columns: weight class, axles, AllVMT, BasicVMT, Over10VMT, Over26VMT, Over50VMT, Under26VMT, Over80VMT, Over106VMT, Snow, and AllAMT. The first two are keys; the rest are allocators.

PaveFactors.txt is read into self.paveFactors and contains cost responsibility factors (by weight class, functional class, and number of axles) for wear and tear of flexible and rigid pavement projects. These factors are produced by the NAPHCAS-OR model (the Oregon version of the National Pavement Cost Model for Highway Cost Allocation developed by Roger Mingo). There are five columns: facility class

(combines functional class and ownership), weight class, axles, flexible, and rigid. The first three are keys.

PCEFactors.txt is read into self.pceFactors and contains passenger car equivalents (PCEs) by weight class, functional class, and number of axles for vehicles on regular, uphill, and congested roadways. These factors represent the amount of roadway capacity a single vehicle of a particular weight class takes up as a proportion of the capacity consumed by a basic vehicle. These factors were developed from a study conducted as a part of the 1997 Federal Highway Cost Allocation Study. There are six columns: facility class (combines functional class and ownership), weight class, axles, regularPCE, uphillPCE, and congestedPCE. The first three are keys.

DeclaredOperating.txt is read into self.declaredOperating and contains shares of vehicles in each declared weight class operating at each operating weight class. These data were developed from the Special Weighings data. There are five columns: declared, declaredAxles, operating, operatingAxles, and share. The first four are keys.

DeclaredRegistered.txt is read into self.declaredRegistered and contains shares of vehicles in each declared weight class that are registered in each registered weight class. These data were developed from Motor Carrier registration data. There are three columns: declaredWeight, registeredWeight, and share. The first two are keys.

BasicSharePeak.txt is read into self.peakShares and contains the basic-vehicle share of peak-hour VMT for each functional class. These data were developed from automatic traffic recorder data. There are two columns: functionalClass and share. The first is the key.

The following class methods capture data from Excel (user inputs) for the VMT calculations. Excel calls these methods to give data to the model before it calls the makeVMTMaster method.

setGrowthRates() (line 70) captures VMT growth rates by weight class and puts them into self.growthRates. The key is weight class and values are annual growth rates for VMT.

setVMTByFC() (line 77) captures base-year VMT by functional class and ownership and puts them into self.VMTbyFC. The key is facility class (combination of functional class and ownership) and the values are base-year VMT. These data are developed from the state's HPMS submission and FWHA Highway Statistics reports.

setBaseVMT() (line 84) captures base-year VMT by weight class and tax class and puts them into self.baseVMT. self.baseVMT is a nested dictionary. The outer keys are weight classes (from the first column of the second and greater rows of the input data). The inner keys are vehicle tax classes from the contents of the second and greater columns of the first row. Values are base-year VMT in that combination of weight class and tax class. These data are typically developed from a variety of sources, including the ODOT Revenue Forecast, DMV registrations data, Motor Carrier registrations data, weight-mile tax reports, flat-fee reports, and road-use assessment fee reports.

setEvasion() (line 94) captures evasion and avoidance rates, along with some other assumptions used in revenue attribution, and puts them into:

- self.emptyLogWeight (the assumed declared weight of an empty log truck with its trailer decked)

- self.emptyLogPercent (the assumed share of log-truck VMT that are driven while empty and with the trailer decked)
- self.ruafReg104 (the assumed share of RUAF VMT by trucks with a registered weight of 104,001 to 105,500 pounds)
- self.ruafReg96 (the assumed share of RUAF VMT by trucks with a registered weight of 96,001 to 98,000 pounds)
- self.ruafReg78 (the assumed share of RUAF VMT by trucks with a registered weight of 78,001 to 80,000 pounds)
- self.ruafRegRate (the assumed per-mile registration fee paid by trucks that pay the RUAF)
- self.basicDiesel (the assumed proportion of basic VMT by diesel-powered cars and light trucks)
- self.wmtEvasion (the assumed percent of total miles traveled by WMT vehicles upon which taxes are not paid)
- self.dieselEvasion (the assumed percent of VMT by use-fuel-tax-paying vehicles for which the use-fuel tax was not paid; includes evasion and avoidance)
- self.gasEvasion (the assumed percent of VMT by gas-tax-paying vehicles for which the gas tax was not paid; probably is entirely avoidance)

These assumptions are specified by the analyst.

The following class methods capture data from Excel (user inputs) for the cost allocation calculations. Excel calls these methods to give data to the model before it calls the allocateCosts() method.

setPath() (line 114) captures allocation rules to be applied to each expenditure category (work type) and puts them into self.path. self.path is a nested dictionary. Outer keys are work-type codes and inner keys are allocator names. Values are shares of costs in that work type to which that allocator should be applied. These assumptions are specified by the analyst in conformance with the approach agreed upon by the Study Review Team.

setNonProjectCosts() (line 124) captures non-project costs to be allocated and puts them into self.nonProjectCosts. The key is a tuple consisting of funding source, work type, facility class (combination of functional class and ownership), and bridge type (always zero). The values are biennial dollars of costs to allocate. These are typically derived from the Agency Request Budget.

setProjectCosts() (line 134) captures project costs to be allocated and puts them into self.projectCosts. The key is a tuple consisting of funding source, work type, facility class (combination of functional class and ownership), and bridge type. The values are biennial dollars of costs to allocate. These are typically derived from the ODOT Cash Flow Model and Project Control System.

setLocalCosts() (line 144) captures local government costs to be allocated and puts them into self.localCosts. The key is a tuple consisting of funding source, work type, facility class (combination of functional class and ownership), and bridge type. The values are biennial dollars of costs to allocate. These are typically derived primarily from Local Roads and Streets Survey reports.

setStuddedTire() (line 154) captures studded tire costs to be allocated and puts them into self.studdedTire. The key is a tuple consisting of funding source, work type, facility class (combination of functional class and ownership), and bridge type (always zero). The values are biennial dollars of costs to allocate, which will later be

moved from the work types specified here into the work type for studded tire damage. These assumptions are supplied by the analyst.

setBridgeFactors() (line 163) captures cost shares used to distribute bridge expenditures for incremental cost allocation and puts them into self.bridgeFactors. self.BridgeFactors is a nested dictionary. The outer key is the bridge type and the inner key is a bridge-reclassification work type. Values are shares of costs for that bridge type to be allocated according to that work type. Shares for each bridge type must add up to one. The default values for these assumptions were developed from the 2002 OBEC Bridge Cost Allocation Study.

setBondFactor() (line 172) captures the bond factor, which is the proportion of bond-funded expenditures that will be repaid in a single biennium, and puts it into self.bondFactor. This assumption is specified by the analyst. It represents the biennial repayment amount as a proportion of the principal amount.

setBiennium() (line 177) captures the starting year of the model biennium and puts it into self.biennium. Specified by the analyst.

The following class methods capture data from Excel (user inputs) for the revenue attribution calculations. Excel calls these methods to give data to the model before calling the attributeRevenues() method.

setRevenueTotals() (line 188) captures revenue control totals and puts them into self.revenueTotals. The key is the name of the revenue instrument and the value is biennial dollars of revenue to attribute. These are typically derived from the Agency Request Budget and must be consistent with current-law rates and the VMT data and assumptions specified elsewhere.

setRates() (line 198) captures rates for each of gas tax, use-fuel tax, VMT tax, weight mile tax, normal registration, farm registration, tow registration, charitable/ nonprofit registration, e-plate registration, light-trailer registration, heavy-trailer registration, and title fees and puts them into self.rates. self.rates is a nested dictionary. The outer keys are revenue instruments and the inner keys are tuples of weight class and number of axles. Values are rates in dollars per VMT, gallon, or year, as appropriate. These are specified by the analyst based on current law and must match the assumptions used to develop the revenue control totals.

setRUAFRates() (line 222) captures current-law road-use assessment fee rates and puts them into self.RUAFRates. The key is a tuple consisting of weight class and number of axles and values are dollars per mile. These are specified by the analyst based on current law.

setFFRates() (line 236) captures current-law monthly flat-fee rates, average monthly miles, and axle distribution and puts them into self.flatfee. The key is one of 'Log Rate', 'Dump Rate', 'Chip Rate', 'Log VMT', 'Dump VMT', 'Chip VMT', 'Log Axles', 'Dump Axles', or 'Chip Axles' and the values are rates in dollars per month, average miles per month, or shares of VMT in that weight class accounted for by trucks with that number of axles, as appropriate. Rates are specified by the analyst based on current law and the assumptions about average miles per month and distribution of miles among numbers of axles are derived from flat fee reports from MCTD.

setMPG() (line 260) captures initial MPG assumptions by weight class and puts them into self.MPG. The key is operating weight class and values are miles per gallon. The default values for these assumptions were derived from a regression analysis of Vehicle Inventory and Use Statistics (VIUS) data.

The following class methods capture data from Excel (user inputs) for the alternative revenue attribution calculations. Excel calls these methods to give data to the model before calling the attributeAltRevenues() method.

setAltRates() (line 210) captures alternative rates for gas tax, use-fuel tax, VMT tax, weight mile tax, normal registration, farm registration, tow registration, charitable/ nonprofit registration, e-plate registration, light-trailer registration, heavy-trailer registration, and title fees and puts them into self.altRates. self.altRates is a nested dictionary. The outer keys are revenue instruments and the inner keys are tuples of weight class and number of axles. Values are rates in dollars per VMT, gallon, or year, as appropriate. These are specified by the analyst to test proposed changes to rates.

setAltRUAFRates() (line 229) captures alternative road-use assessment fee rates and puts them into self.altRUAFRates. The key is a tuple consisting of weight class and number of axles and values are dollars per mile. These are specified by the analyst to test proposed changes to rates.

setAltFFRates() (line 248) captures current-law monthly flat-fee rates, average monthly miles, and axle distribution and puts them into self.altFlatfee. The key is one of 'Log Rate', 'Dump Rate', 'Chip Rate', 'Log VMT', 'Dump VMT', 'Chip VMT', 'Log Axles', 'Dump Axles', or 'Chip Axles' and the values are rates in dollars per month, average miles per month, or shares of VMT in that weight class accounted for by trucks with that number of axles, as appropriate. These are specified by the analyst to test proposed changes to rates.

The following class methods capture data from Excel (user inputs) for use in tabulating summary tables of allocated costs and costs to allocate. Excel calls these methods to give data to the model before calling the getAllocatedCostsByWorkType() and getCostsToAllocate() methods.

setSummaryWorkTypes() (line 272) captures definitions of summary work types and puts them into self.summaryWorkTypes. The key is the work type and the value is the summary work type.

setSummaryWeightClasses() (line 279) captures definitions of summary weight classes and puts them into self.summaryWeightClasses. The key is the weight class and the value is the summary weight class.

VMT Analysis

The **makeVMTMaster()** method (line 292) returns VMT by functional class, ownership, weight class, and number of axles for the model year. It uses VMT by weight class and number of axles (VCTotals, obtained from self.baseVMT), VMT by functional class and ownership (FCTotals, obtained from self.VMTbyFC), and the seed data from self.seedData to create a VMT Master table.

Using iterative proportional fitting, the program repeatedly scales the seed data until each row sums to its corresponding VC total and each column sums to its corresponding FC total. The program stops fitting data once the sum of squared errors for the fitted values falls below a specified threshold.

Methods within makeVMTMaster

The following methods are defined and used within the makeVMTMaster class method:

findFCSums() (line 307) sums VMTData by functional class and ownership across weight classes and numbers of axles.

findVCSums() (line 315) sums VMTData by weight class and number of axles across functional class and ownership.

scaleToFC() (line 323) multiplies each value in VMTData by the ratio of its FCTotal control total to its current FCSum.

scaleToVC() (line 330) multiplies each value in the VMTData by the ratio of its VCTotal control total to its current VCSum.

findSSE() (line 337) calculates the sum of squared errors for the FCSums. (The SSE for VCSums will equal zero because the scaling process for VCSums runs after scaling for FCSums.) The "errors" are differences between the sums of VMT by individual facility class and the control total for that facility class. They are squared (multiplied by themselves) before adding up over facility classes for two reasons: positive and negative differences can't cancel each other out and a large difference in an individual facility class will be given greater weight than several small differences that add up to the large difference. It is important that none be off by a lot, but it is acceptable for many to be off by a tiny amount each.

How makeVMTMaster() works

VMTMaster is a matrix of vehicle-miles traveled (VMT) by vehicle classes and by road classes. Vehicle classes are combinations of 2,000-pound weight increments and numbers of axles. Road classes are combinations of functional classes (defined by the Federal Highway Administration) and ownership.

We start with base-year VMT by declared weight class by tax class to develop the row totals. Vehicles weighing 80,000 pounds and under are not classified by axles (axles=0). Base-year VMT by weight-mile-tax vehicles between 80,000 and 105,500 pounds are available by numbers of axles because the tax rate varies with the number of axles. Other vehicles in this range (e.g., farm, publicly-owned, or road-use assessment fee) are assumed to have the same distribution of miles by number of axles within each weight class as weight-mile tax vehicles.

Base-year VMT by road-use-assessment-fee vehicles weighing more than 105,500 pounds are distributed among numbers of axles according to the proportions specified in self.axleShares. A dictionary named VCTotals, keyed by weight class and number of axles, is built to contain the row totals for the VMT Master matrix.

The column totals are copied from self.VMTbyFC and scaled to add up to exactly the same total as the row totals.

The individual cells of the VMT Master matrix are initialized with the proportions from self.seedData. The columns initially sum to one.

The iterative proportional fitting follows the following steps:

1. Scale each column so that it adds up to its column control total (scaleToFC())
2. Sum each row (findVCSums())
3. Scale each row so that it adds up to its row control total (scaleToVC())
4. Sum each column (findFCSums())
5. Find the sum of squared differences between column totals and column control totals and compare to the threshold value (findSSE()). The threshold value is arbitrarily set to 48, meaning that if each of the 48 facility classes was off by less than one vehicle mile traveled (out of a total of more than 30 billion), it would be satisfied.

6. If the sum of squared errors is less than the threshold, stop. Otherwise, go back to Step 1.

Once iterative proportional fitting is complete, the growth rates for each weight class from self.growthRates are applied to the fitted base-year VMT data to bring it to the model year (the middle 12 months of the study biennium).

Three additional, summary facility classes are then added to the matrix. FC 0 is all state-owned roads, FC -1 is all roads, and FC -2 is all locally owned roads.

VMTMaster is copied to self.VMTMaster for use by other methods, is written to disk, and selected portions (FC -2 to FC 0, and all combinations of state ownership and functional class) are returned to Excel.

The key in self.VMTMaster is a tuple consisting of facility class, declared weight class, and declared number of axles. Values are model-year VMT.

Once VMTMaster is built, it is used to convert self.paveFactors, which are by operating weight, actual number of axles, and functional class, into factors by declared weight class, declared number of axles (zero if declared weight under 80,000 pounds and nine if nine or more), and facility class (combinations of functional class and ownership, including the aggregate facility classes for all roads, all state-owned roads, and all locally owned roads), which are stored in self.pavement and used in allocateCosts() to allocate pavement costs to declared weight classes. The factors in self.pavement are VMT-weighted averages of the factors in self.paveFactors. Factors are constructed for both flexible and rigid pavements.

self.pavement is a nested dictionary. The outer key is the pavement type (Flex or Rigid) and the inner key is a tuple consisting of facility class, declared weight class, and declared number of axles. The code for preparing the pavement factors is intermingled with the code for building VMTMaster to save repeated looping over the same data structures.

The makeVMTByVehicles() method (line 503) multiplies VMT values in self.baseVMT by the appropriate compounded growth rates to produce self.vmtByVehicles, which contains model-year VMT by weight class and tax class. These are returned to Excel. self.vmtByVehicles is a nested dictionary. The outer key is the tax class and the inner key is the weight class.

Cost Allocation

The allocateCosts() method (line 532) performs the following processes:

- Combine local costs data from self.localCosts with project costs data from self.projectCosts into self.projectCosts (line 537).
- Do bridge splits on project costs (line 541). For projects in work types 13, 14, 15, 19, 67, 68, 113, 114, 115, 119, 167, and 168 (bridge and interchange projects), the bridge type for each project is identified and the project's cost is split into multiple work types (60-65) using the bridge factors appropriate to the bridge type. Costs in the original work types are removed from self.projectCosts and the aggregated, split costs in work types 60-65 are inserted into self.projectCosts. Bridge projects that add capacity (work types 67, 68, 167, and 168) get their base increment allocated according to the allocator(s) specified in work type 65, so the portion of their costs that would go to work type 60 according to the bridge factors defined in the *Bridge Splits* tab of the workbook is instead assigned to work type 65.
- Separate bond projects and apply the bond factor (line 556). Projects where the funding source is "bond" are identified, their costs are multiplied by the bond factor, and they are removed from self.projectCosts and inserted into bondsToAllocate.

- Do studded tire adjustment (line 563). For each work type and corresponding dollar amount in self.studdedTire, the dollar amount is divided proportionally among all projects in that work type in self.projectCosts and moved out of those projects and into work type 39 or 139 (if the original work type was over 100, indicating work on locally owned roads).
- Set up allocation vector data structure (allocators) and build allocation vectors (line 586). There are allocation vectors for each combination of allocator, functional class, and ownership. Within each allocation vector, there is an element for each combination of weight class and number of axles.
- Build allocation vectors with the vector of allocation factors appropriate to the allocator. The allocation factors are proportional to costs imposed per VMT and come from self.simpleFactors, self.pavement, and self.pceFactors. Each allocation factor is then multiplied by the VMT in that combination of weight class and number of axles for the combination of functional class and ownership for which the allocation vector is being prepared, which come from self.VMTMaster. The VMT multiplied by the allocation factors for Congested PCE are adjusted using the shares from self.peakShares so that they represent VMT during the peak hour for that functional class.
- Scale allocation vectors so that the elements of each vector sum to one (line 640). The resulting allocation vectors may then be multiplied by a project cost and the result will be a vector of allocated costs with each element containing the dollar amount for that combination of weight class and number of axles. All the elements in the allocated costs vector sum to the original amount to be allocated. For this to work, it is necessary that there be non-zero VMT in the combination of functional class and ownership associated with the project. Incorrectly recorded functional classes (e.g., locally owned interstates) can cause costs to disappear during allocation.
- Apply allocation vectors to project costs to allocate (except for "other construction" and "other bridge" costs) as described above to generate allocated project costs (line 648).
- Make Other Bridge and Other Construction allocators (line 661). Once bridge project costs other than "other bridge" have been allocated, a special allocation vector is built to allocate these costs in proportion to all previously allocated bridge project costs. The same is done to create a special allocation vector to allocate "other construction" costs in proportion to all previously allocated construction project costs.
- Apply Other Bridge and Other Construction allocators to "other bridge" and "other construction" costs (line 705).
- Apply allocators to non-project costs (line 719). Any bond-funded projects found in self.nonProjectCosts are removed, multiplied by self.bondFactor, and added to bondsToAllocate. Remaining non-project costs have the appropriate allocation factors applied to them and are added to allocatedCosts.
- Apply allocation vectors to bonded costs to allocate (line 741). Applies the allocators to bondstoAllocate and stores the result in allocatedBonds.
- Store allocated bonded costs (line 757). Creates a text file of allocated bond costs (allocatedBonds) for use in future studies. (Future model runs will use this file to obtain prior allocated bond costs.)

- Get prior allocated bonds from files (line 773). Captures allocated, current payments due on bonds issued for projects in previous biennia (priorBonds).
- Add current and prior allocated bonded costs to allocatedCosts (line 795).
- Write out detailed allocation results to tab-delimited text files, one for each funding source (line 807). These are named allocatedCosts_federal.txt, allocatedCosts_state.txt, etc.
- Copy allocators to self.allocators and allocatedCosts to self.fullAllocatedCosts (line 823).
- Prepare a summary table of allocated costs and send it back to Excel (line 826). Columns are funding sources and rows are combinations of declared weight class and declared number of axles. Cells contain allocated biennial dollars.

The getAllocationVectors() method (line 846) gets the allocation vectors from self.allocators and returns them to Excel. Columns are allocators and rows are combinations of facility class, declared weight class, and declared number of axles.

The getAllocatedCostsByWorkType() method (line 877) gets allocated costs from self.fullAllocatedCosts and aggregates them by summary work type from self.summaryWorkTypes and by summary weight class from self.summaryWeightClasses and returns the aggregated allocated costs to Excel. Columns are summary weight classes and rows are combinations of funding source and summary work type. Cells contain allocated biennial dollars.

The getCostsToAllocate() method (line 913) gets costs to allocate from self.projectCosts (which now includes local costs and excludes bonded costs), self.nonProjectCosts (which now excludes bonded costs), self.bondCosts, and self.priorBondAmount and aggregates them by summary work type from self.summaryWorkTypes and returns the aggregated costs to allocate to Excel. Note that prior bond amounts do not contain information about their original work type and are put into their own summary work type (21). Columns are funding sources and rows are summary work types. Cells contain biennial dollars.

Revenue Attribution

The attributeRevenue() method (line 950) performs the following processes:

- Attribute road-use assessment fee (RUAF) revenue (line 950). RUAF revenues are attributed to weight classes by multiplying their model-year VMT in each combination of weight class and number of axles by the appropriate RUAF rate from self.RUAFRates. RUAF VMT are the total VMT in that combination of weight class and number of axles from self.VMTMaster times the ratio of RUAF VMT in that weight class to all VMT in that weight class from self.vmtByVehicles. This assumes that axle shares for RUAF vehicles under 105,500 pounds will be the same as for weight-mile tax vehicles in the same weight class, which has been determined to be a reasonable assumption. The resulting revenues are doubled to make them biennial. It is assumed that there is no evasion of road-use assessment fees. Attributed RUAF revenues are put into ruafRevenue, where the key is a tuple consisting of weight class and number of axles and the value is biennial dollars.
- Attribute weight-mile tax (WMT) revenue and as-if WMT revenue (line 966). WMT revenues are attributed to weight classes by multiplying their model-year VMT in each combination of weight class and number of axles form self.vmtByVehicles by the appropriate WMT rate from self.rates. The base-year VMT from which the model-year VMT were derived were adjusted upward from

base-year WMT reports to account for assumed evasion, so the reverse adjustment must be applied to estimate WMT revenue. This is accomplished by multiplying revenues by (1.0 - self.wmtEvasion). The resulting revenues are doubled to make them biennial and stored in wmtRevenue. For all VMT by vehicles in weight classes to which WMT rates apply, but do not pay the WMT, flat fee, or RUAF, the weight-mile taxes they would pay if they did pay the WMT are calculated and stored in asifWmtRevenue. As-if WMT revenues for those paying flat fees are calculated later, along with flat-fee revenues. The key in both wmtRevenue and asifWmtRevenue is a tuple consisting of declared weight class and declared axles.

- Attribute flat-fee revenue (line 993). For each flat-fee commodity (log, dump, and chip), for each combination of weight class and number of axles, divide the model-year VMT by the average VMT per month for that commodity and weight, and multiply the resulting number of vehicle-months by the appropriate monthly flat-fee rate. As-if weight-mile taxes for flat-fee-paying vehicles are calculated at the same time. For flat-fee log trucks, the model VMT must be adjusted prior to estimating as-if WMT revenues. When paying the WMT, log trucks can declare a lower weight when empty and traveling with their trailer decked. When estimating as-if WMT revenues for flat-fee log trucks, VMT in each weight class are multiplied by (1.0 - self.emptyLogPercent) and then by the WMT rate appropriate to that weight class. The VMT then are multiplied by self.emptyLogPercent and the WMT rate appropriate to self.emptyLogWeight. The flat-fee and as-if WMT revenues are doubled to make them biennial and stored in ffRevenue and asifWmtRevenue, respectively. A tab-delimited text file, flat_fee_report.txt, containing flat-fee VMT, revenues, and as-if WMT revenues by commodity and weight class is written out to disk.
- Attribute registration and title revenues (line 1023). Budgeted total DMV registration, Motor Carrier Apportioned, Motor Carrier Non-Apportioned, and title fee revenues are attributed to vehicle classes using fee-weighted VMT. VMT for vehicles over 26,000 pounds are adjusted using the declared-to-registered factors. VMT by tax class and weight class are multiplied by the registration fee that applies to that combination and the resulting amounts are scaled so that they add up to the total expected registration fee revenue. For vehicles over 26,000 pounds, registration fee revenues by registered weight are converted back to revenues by declared weight class using the same declared-to-registered factors. A further adjustment is made to give RUAF vehicles credit for the registration fees they pay.
- This method eliminates the need for forecasting vehicle counts and automatically accounts for the substantial registration revenues that are produced by fees other than the regular registration fee (e.g., temporary registrations, duplicates, etc.). It also eliminates the need for directly forecasting the number of titles that will be issued. There is an implicit assumption that vehicles in the different weight classes of heavy vehicles all travel the same number of miles per title issuance. "As-if" registration fees are estimated for alternative-fee-paying vehicles. As of the 2011 Study, Flat Fee vehicles are no longer treated as alternative fee-paying vehicles.
- The method loops over the rows (combinations of declared weight class and declared number of axles) in self.rates, which are the current-law rates entered in the *Revenues* tab of the workbook. It multiplies the fee per year by the VMT per year by the vehicles subject to that fee (as if the rate were per VMT). It then adds

up those (large) numbers for each instrument and divides the biennial revenue control total for that instrument by the sum of annual miles times annual fee for that instrument. It applies that ratio to the annual miles times annual fee for each combination of declared weight class and declared number of axles to get biennial revenues for that combination and instrument.

- For vehicles over 26,000 pounds, an individual vehicle will have one registered weight, but may have multiple declared weights, depending on configuration. When getting the annual VMT to multiply by each rate, self.declaredRegistered, which contains the proportion of VMT for each declared weight class that is in each registered weight class, is used.
- For vehicles over 80,000 pounds, the revenues are attributed to vehicles classes defined by both declared weight and number of axles, so axle shares for each weight class are calculated and used to spread the registration revenues (which vary only with weight) among the numbers of axles for each weight class.
- At the same time that registration revenues are attributed for "alternative" registration fees (e.g., farm, charitable/non-profit, publicly owned, etc.), "as-if" registration fees are calculated as if they paid the "normal" registration rate for their weight. Those are used later to calculate the "subsidy" amount.
- Make an adjustment to registration revenues to give RUAF vehicles some credit (line 1178). When a vehicle pays the road-use assessment fee, it is often operating at a weight above the maximum allowed declared or registered weight of 105,500 pounds. These vehicles do pay registration fees, but at a weight that does not correspond to the weight recorded in the RUAF data. Assumptions are specified in the *Revenues* tab of the workbook that allow RUAF vehicles to be credited with registration fees by transferring attributed fees from lower weight classes.
- Attribute fuel tax and VMT tax revenues (line 1200). Gasoline and diesel fuel tax revenues are attributed separately because the model allows for different tax rates and different evasion/avoidance assumptions. VMT by fuel type and weight class for fuel-tax paying vehicles are assembled and adjusted for evasion/ avoidance. A preliminary attribution is made by dividing the adjusted VMT in each combination of weight class and fuel type by the assumed miles per gallon for that weight class from the MPG data set and multiplying the resulting number of gallons by the per-gallon rate for that fuel type. The attribution to vehicles between 10,001 and 26,000 pounds is then adjusted to bring those weight classes, as a group, to equity (before considering subsidies). The attribution to basic vehicles (those 10,000 pounds and under) is adjusted to make the total revenues attributed add up to the forecast revenues from the budget. The implied miles per gallon after adjustment for each weight class is calculated and sent back to Excel where it may be examined for reasonableness. The reasons for using this approach are detailed in Issue Paper 6 from the 2005 study.
- The first step in attributing fuel tax revenues is finding the taxed VMT by weight class for the gas tax and for the use-fuel (diesel, etc.) tax, taking into account avoidance, evasion, the portion of basic vehicles that do not burn gasoline, and the fact that publicly owned vehicles such as transit and school buses do not have to pay the use-fuel tax.
- The taxed VMT for each weight class is divided by the assumed miles per gallon from self.MPG and multiplied by the tax rate per gallon to get revenues by weight class. The assumed miles per gallon for vehicles between 10,001 and 26,000 pounds are then adjusted to force those weight classes into perfect equity (before

the subsidy adjustment) and their attributed fuel-tax revenues are recalculated. The sum of attributed non-basic (over 10,001 pounds) fuel taxes are subtracted from their revenue control totals, leaving the amount from basic vehicles. The assumed average basic-vehicle is then recalculated so that basic vehicles will produce this amount of revenue and that amount is attributed to basic vehicles. The calibrated miles-per-gallon assumptions are stored in self.adjustedMPG.

- Attribute other motor carrier revenue (line 1282). Budgeted other motor carrier revenue is attributed to heavy vehicle weight classes on the basis of all RUAF and WMT VMT.
- Determine subsidy amount for each weight class (line 1316). These are calculated for each tax class by subtracting what they do pay in each revenue category from what they would pay if they paid the "regular" tax or fee. Subsidy amounts may be negative.
- Prepare a table of attributed revenues and subsidy amounts and send it back to Excel (line 1338).

getAdjustedMPG() (line 1360) returns the calibrated miles-per-gallon assumptions from self.adjustedMPG to Excel.

Alternative Revenue Attribution

attributeAltRevenues() (line 1376) repeats the revenue attribution process using alternative rates specified by the analyst in the *Alt Rates* tab of the workbook.

The process for alternative revenue attribution is essentially the same as for the primary revenue attribution, but there are important differences:

- When attributing registration and title fee revenues, assume that the revenues per VMT for each combination of instrument and weight class will change by the ratio of alternative rate to original rate. This allows estimating revenues from alternative registration and title fees without specifying the total revenue they will produce in advance.
- When attributing fuel-tax revenues, use the calibrated miles per gallon from the original revenue attribution. This allows estimating revenues from alternative fuel-tax rates without specifying the total revenue they will produce in advance.

Running the HCASModule as a Stand-Alone Program

When the HCASModule is run as a stand-alone program (by double-clicking HCASModule.py, from a command prompt, or through the "Run..." dialog), no class object is created and none of the methods described are run. Instead, the code on lines 1712 to 1716 runs and registers the module as an Active-X object in the Windows registry. This allows Excel to find and use the module and its methods. The module must be registered before the first use of the model and again any time the model and module code are moved to another directory in the user's hard drive (the entire directory must be kept together). The user who registers the module must have permission to write to the Windows registry. If registration doesn't work (a message will appear saying you don't have permission), ask your IT staff to do it for you. Once the module is registered, any user can use it.