State of Oregon Department of Environmental Quality

Additional Information for the Air Quality Permit Application

1) **Provide a new, approved Land Use Compatibility Statement for the proposed construction (the new LUCS is necessary since the application is for a new Standard ACDP for a new source).**

   - ***Enclosed as Attachment A is an approved LUCS for the terminal operations.***

2) **Provide a more detailed facility/process description addressing:**

   a) **Product receipt - railcar unloading procedures:**

      i) **Will all crude oils received by the facility have been stabilized to remove light-end hydrocarbons and sulfur compounds?**

         - ***Crude oil will be received at the facility from various sources which may contain variable fractions of light-end hydrocarbons and sulfur compounds. Some producers stabilize (de-gas) the crude oil to remove some of the light end hydrocarbon and sulfur compounds while others may not. The facility has been designed with a high efficiency combustion system for barge loadout emissions, the storage tanks are equipped with internal floating roofs, and the emission calculations conservatively assume a maximum true vapor pressure (MTVP), as defined and limited by New Source Performance Standard (NSPS) Subpart Kb, of 76.6 kilopascals (kPa) and 2,000 ppm hydrogen sulfide (relative to VOCs) in the off-gases from the terminal operations. These controls are sufficient to minimize emissions and meet the emission rates provided in the application, regardless of whether products received are degassed.***

      ii) **Describe acceptance specifications for crude oil at the facility and at what point was the material assayed to demonstrate those specifications.**

         - ***CPBR accepts materials that are compliant with material handling and environmental requirements and ships materials of API 30 or greater. An assay or certificate of analysis is provided before receipt.***

      iii) **Describe operating procedures for making system connections and railcar unloading.**

         - ***See attached CPBR Operating Checklist for "Offloading railcars with PFT (Bottoms First)" enclosed as Attachment B. As noted in the facility's Standard Operating Procedures Manual, this checklist is reviewed and updated periodically.***

      iv) **Is the dome hatch of each railcar opened to atmosphere for venting during unloading or is there something else in place to minimize/prevent fugitive emissions during unloading.**

         - ***The hatches are not opened to atmosphere during unloading. After pumping begins and a slight vacuum is created in the railcar headspace, the 2"vent valve is actuated.***

v) **Is a [drybreak] or a similar connection device utilized for connection to each railcar… describe.**

- *The hose configuration at CPBR does not have a dry break system like the connections used in gasoline terminal operations. This system at CPBR consists of quick connect camlock fittings to eliminate or minimize the potential for liquid or vapor releases. Additionally, CPBR will continue to operate consistent with the existing spill prevention control and countermeasures (SPCC) plan and stormwater pollution control plan (SWPCP).*

vi) How many railcars can be unloaded simultaneously?

- *At present – 12. Proposed – 60.*

b) The application recognizes the two railcar unloading tanks as process tanks and indicates they will be exempt from NSPS Subpart Kb under the subpart's exemption for process tanks (noted in the definition of "storage vessel"). Please provide DEQ with a copy of any previous EPA applicability determination recognizing tanks in similar use meet this exemption, if you are aware of one. [Will the operating pressure of the railcar unloading tanks be set at 205.0 kPa (29.7 psi) or higher to meet the NSPS Subpart Kb applicability exemption for pressure vessels?]

- *Enclosed as Attachment C is an EPA determination for process tanks. As noted in the determination the tanks must be within the process. In the case of the terminal operations, the process is the transfer of material. These two tanks are solely used for the transfer of material and not for storage. In addition, the tanks are designed to operate at 15 pounds per square inch (gauge), which is equivalent to 29.75 psia or 205.1 kPa. This is based on the EPA TANKS program which states that the barometric pressure in Astoria, Oregon averages 14.75 psia. Therefore, the tanks also meet the exemption from NSPS Subpart Kb as pressure vessels.*

c) Product loadout – marine vessel loadout procedures:

i) Describe operating procedures followed for marine vessel loadout.

- *Operating procedures are enclosed as Attachment D. As noted in the facility's Standard Operating Procedures Manual, these procedures are reviewed and updated periodically.*

ii) How will CPBR ensure that all marine vessels that are to be loaded are equipped with vapor collection connections that are compatible with the facility's control system?

- *All individual vessels are vetted and approved by the USCG for compatibility prior to arrival at the facility.*

iii) Will the facility have capability to load multiple marine vessels simultaneously?

- *The overall fill rate for the system is limited to an aggregate of 25,000 barrels per hour (bbls/hour), regardless of the number of vessels. This is the rate that will be achievable only after the proposed terminal construction project.*

d) **Does CPBR intend to keep the existing vapor recovery unit in service for use under the ethanol manufacturing facility's permit?**

- *In this permit application, CPBR is seeking approval to construct and operate the VCU for terminal operations. CPBR intends to decommission and remove the existing VRU after commissioning of the VCU and obtaining approval for the use of the VCU for the ethanol plant operations either through revision of the current ACDP (No. 05-0006) or an issued Title V operating permit.*

e) **Will alternative transloading procedures ever be used where storage tanks are bypassed and VOL is directly loaded onto marine vessels from process tanks or railcars?**

- *The loading of marine vessels directly from trains is not currently contemplated for the facility. If such an alternative transloading procedure were used, loading rates would be significantly reduced.*

3) **Provide at least five crude oil assays or certificates of analysis for Bakken crude oil, as received, documenting chemical constituents and hydrocarbon/HAP concentrations of the oil's off-gas.**

- *Off-gas chemical concentrations are not accurately estimated by assays. The most representative data for estimating off-gas composition is actual vapor sample data from storage/transportation vessels. See response to item 6 for the chemical analysis summary for vapors off a marine vessel.*

- *Enclosed as attachment E are assays for crude oil as provided by suppliers. The total HAP concentration for those samples represented in the assays is about 10.4 mole percent (0.104 mole fraction). The ACDP application used generally accepted calculation methods that assume roughly 11 mole percent (0.11 mole fraction) HAPs in the liquid.*

4) **If not addressed in the assay documentation above, provide test documentation of Bakken crude oil demonstrating RVPs as received at the facility.**

- *Enclosed as Attachment E are assays representative of materials received at CPBR and a calculation of the MTVP for the two highest RVP samples. As shown, the calculation method is generally conservative (high) but still demonstrates that these typical materials have a MTVP of well below 76.6 kPa for the VOC portion of the oil; as required by NSPS Subpart Kb for floating roof tanks.*

5) **Provide calculations and/or basis descriptions for engineering estimates used in the process emission rate estimates referenced in the application.**

- ***Below is a table of the engineering estimates that were used for the emission calculations along with an explanation of each factor. In preparation of this response it was determined that the H2S and SO2 emissions were being calculated relative to the controlled VOC for the VCU, rather than the pre-controlled VOC emissions. The corrected calculations and an updated AQ402 are enclosed as Attachment F.***

Source	***Pollutant***	***Emission Factor***	***Basis***
EP01 - VCU	*SO2*	*0.0045 lb/kgal*	*Assumes 0.2% H2S in vapor (relative to total VOC) and 90% conversion from H2S to SO2 emissions).* *Calculation:* *0.2%* VOC uncontrolled factor (1.559 lb/kgal * 85%)* 90% * 64/34*
EP01 – VCU	*VOC*	*0.0265 lb/kgal*	*Based on emission levels guaranteed by VCU vendor.*
EP01 – VCU	*GHG (CO2e)*	*0.004 lb/kgal*	*Assumes methane emissions are 0.743% (relative to THC emissions).* *Calculation:* *VOC emission factor (0.0265 lb/kgal) /(1-0.743%)*0.743%*21 CO2e/methane]*
EP01 – VCU	*H2S*	*2.7E-04 lb/kgal*	*Assumes 0.2% H2S relative to VOC emissions and 10% remains H2S* *Calculation:* *0.2%* VOC uncontrolled factor (1.559 lb/kgal * 85%)* (1-90%)*
FS01 – Storage Tanks	*GHGs*	*0.743% of VOC*	*GHG emissions assume 0.743% methane in total hydrocarbon emissions and 99.257% VOC. This conservatively includes the ethane portion in the VOC estimate.*
FS03 – Loadout Fugitives	*GHGs*	*0.003 lb/kgal*	*Assumes methane emissions are 0.743% (relative to THC emissions).* *Calculation:* *VOC emission factor (0.0172 lb/kgal) /(1-0.743%)*0.743%*21 CO2e/methane*
FS03 – Loadout Fugitives	*H2S*	*0.000034 lb/kgal*	*Assume 0.2% H2S relative to VOCs.* *Calculation:* *0.2%* VOC emission factor (0.0172 lb/kgal)*

6) **Provide copy of the engineering test and results documenting methane content of Bakken crude oil vapors as measured at the inlet of CPBR's existing vapor recovery unit (test reference on page 7 of 14 of application's Appendix B).**

- ***Test results are enclosed as Attachment G. The summary data below each "feed" heading represents a grab sample from the VRU inlet that was analyzed. This indicates an average methane concentration of about 5613 ppm (as methane) and 251,768 ppm (as propane). Assuming an approximate VOC to methane molecular weight ratio of 3 (which is conservative since VOCs are about 50 and methane is 16) these data yield a methane concentration of 0.743% [i.e., 5613/(251,768*3) = 0.743%]. As noted in the application, we believe these vapor samples to represent the potential methane from evaporative emission sources. Applying this emission factor results in estimated potential greenhouse gas emissions from fugitive evaporative sources of about 88.6 tons per year CO2e (0.13% of the total potential 68,814 tons per year CO2e for the entire facility).***

7) **Provide scaled engineering site plan drawing(s) showing the locations/layout of the transloading facility's associated process equipment and tanks.**

- ***Enclosed as Attachment H is a scaled site plan drawing showing the locations of the transloading equipment and a larger print of the plot plan that was included in the ACDP application.***

8) **Provide manufacturer's design drawings and specifications for process tanks, storage tanks and storage tank seal system.**

- ***Enclosed are the design drawings for the process tanks and storage tanks as Attachment I.***

9) **Provide manufacturer's design drawings and specifications for the vapor combustion unit including intended stack height and sampling port locations.**

- ***Manufacturer's design drawings for the VCU and stack are enclosed as Attachment J.***

Attachment A

Thank you for your payment!

This service has been provided by Columbia County, OR and Point & Pay. We value your business. Please keep this receipt for future reference.

You have made a payment to Columbia County. OR , your payment was processed at Land Development Services office . Columbia County Thanks You for your payment.

Name:	Don Cain
Address:	81200 Kallunki Road, Clatskanie OR, US, 97016
Contact:	5037287000
Comments:	Land Use Compatibility
Payment ID:	**11576348**
Date:	10/08/13 09:32 AM
Subtotal:	$35.00
Fee:	$2.00
Total:	$37.00
Method:	Credit or Debit Card(**********8932)

Item Purchased	Transaction Description	Account	Amount
Permits-LOS	Columbia Count	LUC 14-09	$35.00

Si!j!)aturevi 1 £V (lj, Date: /O 1-2j

/ c?\.Q/.__

By signing this receipt you agree to the terms and conditions of this service.

You will see one line item on your credit or debit card statement indicating the amount you paid and will be identified as *Columbia County* . If you have any questions about the charges please call 1-888-891-6064.

Print Receipt Close Window

COLUMBIA COUNTY COURTHOUSE
LAND DEVELOPMENT SERVICES
230 STRAND STREET
ST HELENS, OR 97051
(503) 397-1501

Receipt #: 11326 Receipt Date: 10/08/2013 09.36 AM
Station: 5 Cashier: WHEELEL
Receipt Name: DON CAIN

Comments: LAND USE COMPATIBILITY STATEMENT

P - P PLANNING PERMITS	Detail	Amount
Map #	840000000301	
Customer Name	DON CAIN	
Customer Address	81200 KALLUNKI RAOD	
Customer City/State/Zip	CLATSKANIE OR 97016	
Owner Name	COLUMBIA PACIFIC BIO REFINERY	
Situs Address	81200 KALLUNKI ROAD	
Situs City	CLATSKANIE	
Usage or purpose	LAND USE COMPATIBILITY STATEMENT	
Permit #	LUC 14-09	
Code Compl. Investig. Fee (Y/N	NO	
Zoning Compliance Stmt. (Y N)	=35 00	$35 00

ITEM TOTAL: $35.00

Thank You
Retain this receipt for your records

Receipt Total $35.00
CREDIT CARD 11576348 $35.00

Oregon Department of Environmental QuaJity
LAND USE COMPATIBILITY STATEMENT (LUCS)

SECTION 1-TO BE COMPLETED BY APPLICANT

A. Applicant Name: Cascade Kelly Holdings, LLC db<g	B. Project Name: CPBR Facility Improvement Project
Contact Name: Dan Luckett General Manager	Physical Address: 81200 Kallunki Rd.
Mailing Address: 81200 Kallunki Rd.	City, State, Zip: Clatskanie, OR, 97016
City, State, Zip: Clatskanie, OR, 97016	Tax Lot #: 8040000 301
Telephone: 503-728-7000	Township: 8 North Range: 4 West Section: 15
Tax Account #: 20-4790295	Latitude: 46 deg,10',16.3"
	Longitude: -123 deg,9',24.1"

C. Describe the project, include the type of development, business, or facility and services or products provided (attach additional information if necessary):

CPBR Facility Improvement Project

Replacement of Vapor Recovery Unit with A high Efficiency Vapor Combustion Unit, Addition of four 108,000 Barrel Storage tank farm, addition of rail off-load stations and two 36,000 gallon off-load process tanks for the rail off-load area.

D. Check the type of DEQ permit(s) or approval(s) being applied for at this time.

- O Air Quality Notice of Construction
- O Air Contaminant Discharge Permit *(excludes portable facility permits)*
- D Air Quality Title V Permit
- D Air Quality Indirect Source Permit
- Cl Parking/Traffic Circulation Plan
- D Solid Waste Land Disposal Site Permit
- D Solid Waste Treatment Facility Permit
- D Solid Waste Compost Facility Registration or Permit
- D Solid Waste Letter Authorization Permit
- D Solid Waste Material Recovery Facility Permit
- D Solid Waste Energy Recovery Facility Permit
- D Solid Waste Transfer Station Permit
- D Waste Tire Storage Site Permit
- D Pollution Control Bond Request
- D Hazardous Waste Treatment, Storage, or Disposal Permit
- D Clean Water State Revolving Fund Loan Request
- D Wastewater/Sewer Construction Plan/Specifications *(includes review of plan changes that require use of new land)*
- D Water Quality NPDES Individual Permit
- 0 Water Quality WPCF Individual Permit *(for onsite construction-installation permits use the DEQ Onsite LUCS [prm2*
- D Water Quality NPDES Stormwater General Permit *(1200-A, 1200-C, 1200-CA, 1200-COLS, and 1200-Z)*
- D Water Quality General Permit *(all general permits, except 600, 700-PM, 1700-A, and 1700-B when they are mobile.)*
- D Water Quality 40I Certification for federal permit or license

E. This application is for: 0 Permit Renewal ({]New Permit D Pennit Modification D Other:

SECTION 2 - TO BE COMPLETED BY CITY OR COUNTY PLANNING OFFICIAL

Instructions: Written findings of fact for all local decisions are required; written findings from previous actions are acceptable. For uses allowed outright by the acknowledged comprehensive plan, DEQ will accept written findings in the form of a reference to the specific plan policies, criteria, or standards that were relied upon in rendering the decision with an indication of why the decision is justified based on the plan policies, criteria, or standards.

A. The project proposal is located: 0 Inside city limits D Inside UGB Outside UGB

B. Name of the city or county that has land use jurisdiction *(the legal entity responsible for land use decisions for the subject property or land use);* (Z £ rb-£;

SECTION 2 - TO BE COMPLETED BY CITY OR COUNTY PLANNING OFFICIAL

Applicant Name: Cbtf,11'7B/...(/ Htcrf/C, Brc·lt6,91' Project Name: C.,pt3,R_ Gt"LIty tf'1-P/!6U€/"t:iD(',PA OJECT

C. Is the activity or use allowed under Measure 49? . Measure 49 is not applicable O Yes; if yes, then check one:

D Express; approved by DLCD order #:

D Conditional; approved by DLCD order #:

D Vested; approved by local government decision or court judgment docket or order #:

D. Is the activity or use compatible with your acknowledged comprehensive plan as required by OAR 660-031?
Please complete this form to address the activity or use for which the applicant is seeking approval (see I.C on the previous page). If the activity or use is to occur in multiple phases, please ensure that your approval addresses the phases described in J.C. For example, if the applicant's project is described in 1.C as a subdivision and the LUCS indicates that only clearing and grading are allowed outright but does not indicate whether the subdivision is approved, DEQ will delay permit issuance until approval for the subdivision is obtained from the local planning official.

D The activity or use is not regulated by the acknowledged comprehensive plan; explain:

D YES, the activity or use is pre-existing nonconfonning use allowed outright by *(provide reference for local ordinance):*

YES, the activity or use is allowed outright by *(provide reference for local ordinance):*

A-rJ-.J\ D J>-'...rrr.il.kbl {Lv ?hUJU.v{ 1-f', .(\PD 2utJe....

D YES, the activity or use received preliminary approval that includes requirements to fully comply with local requirements; findings are attached.

D YES, the activity or use is allowed; findings are attached.

D NO, see 2.C above, activity or use allowed under Measure 49; findings are attached.

D NO, *(complete below or attach findings for noncompliance and identify requirements the applicant must comply with before compatibility can be determined):*

Relevant specific plan policies, criteria, or standards:

Provide the reasons for the decision:

#####

Additional comments (attach additional infonnation as needed):#####

Planning Official Signature: J)L{,!Ji d lr Title: .PICtA--rJ rff

Print Name: ():/t.,rcA.. () . (_u J Telephone #: ')l)}-311- f2.-u Date: 10)1// ?

If necessary, depending upon city/county agreement on jurisdiction outside city limits but within UGB:

Planning Official Signature: Title:

Print Name: Telephone #: Date:

Attachment B

COLUMBIA PACIFIC BIO-REFINERY

DATE_____

Offloading Railcars with PFT (Bottoms First)

Make sure you have read MSDS before handling chemicals.

Wear appropriate PPE.

PROCEDURE

STEP		INITIAL	TIME
1	Ensure that all the piping is valved in to the appropriate storage tank from the PFT tanks.		
2	Ensure appropriate space for the unit train in the storage tanks and make provisions for when to switch tanks if necessary.		
3	Ensure that the valving for a clear path to TK-6104 and out of 6104 to PC6101 & 02 is done.		
4	Ensure that the valving path from PC-6101 and PC-6102 to the tank farm has been done.		
5	Notify the control room to monitor storage tank levels and to advise if levels get high.		
6	Pinch back the main PFT tank fill valves to 2 notches open.		
7	Once the cars are placed and the all clear is given, begin by hooking up the bottoms and opening the valves to fill the tank.		
8	The tops operator can open the domes and remove the vent plugs, but do not vent yet.		
9	Monitor the PFT control panel for the low tank		

DRAFT

COLUMBIA PACIFIC BIO-REFINERY

DATE_____

	level alarm to clear. Once clear start the pump.		
10	**The pump will start momentarily on low flow for the first 10 barrels of the transfer.**		
11	**Once the first 10 barrels are pumped, the system will switch to high flow.**		
12	**Once in high flow, begin slowly opening the main fill valves on the side of the tank until full open.**		
13	**Once the valves are open the top operator can test the vents for pressure.**		
14	**If pressure remains, close the vent and wait. Once there is no pressure or a slight vacuum, open the vents fully.**		
15	**Monitor the PFT for unusual noises or leaks. Note: PFT Operator will verify all cars are valved in appropriately, placards are on, and no noticeable defects with the railcars.**		
16	**Once TK-6104 gets to a 20% level start either PC-6101 or PC-6102 at 40%. Once started, begin ramping up the speed to 95%.**		
17	**The PFT pump will shut down once the low level switch is tripped in the PFT tank.**		
18	**Once the system shuts down, switch the flow control to low flow and restart the pump.**		
19	**Once the system shuts down on low level again, begin to monitor for empty cars by**		

DRAFT

COLUMBIA PACIFIC BIO-REFINERY

DATE_____

	checking the sight glass on each hose assembly for air pockets.		
20	**If air pockets are visible, climb to the top of the rail car and verify empty by looking into the rail car or using the level dip stick. Open the top man way only if needed.**		
21	**It may require additional runs of the pump to get the last remaining product. Once all cars are empty and done draining, the control panel should stay in a low level alarm state.**		
22	**Begin unhooking process**		

SIGNED **DATE**

NAME

SUPERVISOR

DRAFT

Attachment C

U.S. Environmental Protection Agency
Applicability Determination Index

Control Number: 0800041

Category:	NSPS
EPA Office:	CAMPD
Date:	11/20/2007
Title:	Process Tanks Defined
Recipient:	Cunningham, Lee
Author:	Alushin, Michael
Comments:	

Part 60, A	General Provisions	
	Kb	Storage Vessels for VOCs (post 7/23/84)

References:	60.110b(a) 60.111b

Abstract:

Q1: Do the process and alcohol day tanks at Archer Daniels Midland's (ADM) dry mill ethanol production facility at its existing corn wet mill in Columbus, Nebraska, meet the process tank definition which exempts them from the control requirements of 40 CFR part 60, subpart Kb?

A1: Yes. EPA finds that these tanks are used within the process, are process tanks, and are not considered storage vessels subject to NSPS subpart Kb

Q2: Is the alcohol QC tank also a process tank and not a storage vessel under NSPS subpart Kb?

A2: No. EPA finds that this tank does not engage in the type of unit operations or other functions described for process tanks, and is outside of the process. The sampling performed at the tank does not qualify this tank as a process tank. It is subject to NSPS subpart Kb as a storage vessel.

Q3: Is the alcohol reclaim tank a process tank and not a storage vessel under NSPS subpart Kb?

A3: No. EPA finds that this tank serves as a feed vessel for reintroduction of material back into the process. It is not within the process, and is a storage vessel subject to NSPS subpart Kb.

Letter:

Mr. Lee R. Cunningham
Corporate Environmental Counsel
Archer Daniels Midland Company
4666 Faries Parkway
P.O. Box 1470
Decatur, Illinois 62526

Dear Mr. Cunningham:

We have reviewed your inquiry of March 5, 2007, regarding the applicability of 40 CFR Part 60, Subpart Kb, Standards of Performance for Volatile Organic Liquid (VOL) Storage Vessels (NSPS Subpart Kb), to certain ethanol tanks at Archer Daniels Midland (ADM) Company's ethanol plants. In addition to your
March 5, 2007, request, we have considered electronic mail correspondence from your company dated April 19, 2007, and May 25, 2007, a May 23, 2007, conference call, and conversations with your staff and counsel as recently as September. Our determination of applicability is provided for the Columbus, Nebraska ethanol plant. Requests for applicability determinations for other plants must be submitted in writing to the appropriate delegated state agency.

According to your March 5, 2007, request, ADM received a PSD permit from the Nebraska Department of Environmental Quality on October 20, 2006, to construct a dry mill ethanol production facility at its existing corn wet mill in Columbus, Nebraska. The ethanol plant will include fermentation and distillation processes followed by a finishing process. The finishing will include dehydration, nitrogen stripping, blending with denaturant and corrosion inhibitor, and filtering, followed by quality assurance/quality control (QA/QC) of the material (sampling, testing and segregation). Any product that does not meet the quality specifications is recycled back into the process.

Your request for an applicability determination pertains to five "proof ethanol" tanks. Those tanks are listed below:

- one 100,000 gallon Process Tank (EU-DM 54)
- two 500,000 gallon Alcohol Day Tanks (EU-DM 41 & 42) - one 500,000 gallon Alcohol QC Tank (EU-DM 43)
- one 500,000 gallon Alcohol Reclaim Tank (EU-DM 40).

Following a distillation process, raw ethanol is pumped into the Process Tank, and then sent through dehydration and nitrogen stripping to increase proof and remove impurities. The ethanol is then pumped to the Alcohol Day Tanks. From the Alcohol Day Tanks, the ethanol is converted to fuel-use ethanol by adding denaturant and corrosion inhibitor. The denatured ethanol fuel is pumped to the Alcohol QC Tank where it is sampled and tested to ensure that the ADM quality specifications are met. Any material that does not meet the specifications is sent to the Alcohol Reclaim Tank where it is gradually blended back into the Alcohol Day Tanks to be reprocessed. Material that meets the product specifications is pumped from the Alcohol QC Tank to three storage tanks used for shipping purposes.

ADM agrees with the Nebraska Department of Environmental Quality that the three storage tanks that hold the denatured fuel ethanol that meets the ADM quality specifications are subject to NSPS Subpart Kb. However, ADM believes the other five tanks referenced above qualify as process tanks under NSPS Subpart Kb, and as such would be exempt from the requirements of Subpart Kb for storage vessels. The
United States Environmental Protection Agency (EPA or the Agency) agrees with ADM that the Process Tank and the two Alcohol Day Tanks are process tanks. However, EPA has determined that the Alcohol QC Tank and the Alcohol Reclaim Tank are storage vessels subject to NSPS Subpart Kb for reasons discussed below.

Regulatory Language

NSPS Subpart Kb applies to . . . each storage vessel with a capacity greater than or equal to 75 cubic meters that is used to store volatile organic liquids (VOL) for which construction, reconstruction, or modification is commenced after July 23, 1984.
40 CFR Section 60.110b(a). Certain exceptions apply. See 40 CFR Section 60.110b. A storage vessel generally includes each tank, reservoir, or container used for the storage of volatile organic liquids, but excludes certain enumerated structures.

40 CFR Section 60.111b.

On October 15, 2003, Subpart Kb was amended to exclude process tanks from the definition of storage vessel. 68 FR 59328. Subpart Kb defines process tank to mean:

a tank that is used within a process (including a solvent recovery or raw material recovery process) to collect material discharged from a feedstock storage vessel or equipment within the process before the material is transferred to other equipment within the process, to a product or by-product storage vessel,

or to a vessel used to store recovered solvent or raw material. In many process tanks, unit operations such as reactions and blending are conducted. Other process tanks, such as surge control vessels and bottoms receivers, however, may not involve unit operations. (Emphasis added.)

40 CFR Section 60.111b

To qualify as a process tank the tank in question must be "within the process."
The Subpart Kb regulations do not define process. However, EPA has provided examples in the definition, the preamble and the response to comments document of what types of activities occur within process tanks, which again must be within a process. The definition identifies reactions and blending as unit operations that might be conducted in process tanks. The preamble to the final rule also lists fermentation and distillation. 68 FR 59330. The June 2003 response to comments document1 expands on this latter list and includes the following: fermentation, distillation, mixing and blending, condensing, filtering, and extraction.

The definition of process tank indicates that certain tanks that do not include unit operations may also qualify as process tanks. The definition identifies surge control vessels and bottoms receivers as such tanks, and the preamble to the final rule includes vessels used for surge control of wastewater and/or sludge. 68 FR 59330. The response to comments document includes pipeline surge control vessels. Any of these vessels would need to be located "within a process" to be covered by the process tank exclusion.

The types of processes covered in the process tank definition include solvent or raw material recovery processes. However, the preamble to the final rule clarifies,

[t]he EPA considers vessels that receive and accumulate solvent or raw material from recovery processes to be storage vessels, not process tanks. Such vessels serve the same function as virgin solvent and raw material storage vessels . . .

68 FR 59330

Applicability of NSPS to the Ethanol Proof Tanks at the Columbus, Nebraska Source

Process Tank (EU-DM 54)

The Process Tank receives material directly from the distillation process. From there the material is sent to dehydration and then nitrogen stripping. Consistent with the definition of "process tank" at 40 CFR Section 60.111b, the Process Tank (EU-DM 54) is therefore ". . . tank that is used within a process to collect material discharged from" equipment within the process before the material is transferred to other equipment within the process. . . It is a process tank as defined in the regulations; therefore, it is not a storage vessel and is not subject to NSPS Subpart Kb.

Alcohol Day Tanks (EU-DM 41 & 42)

The Alcohol Day Tanks also fit the definition of process tanks. These tanks are located after the nitrogen strippers and prior to denaturing. They are used, consistent with the process tank definition, "to collect material discharged from" equipment within the process before the material is transferred to other equipment within the process. . . 40 CFR Section 60.111b. As such, these tanks are process tanks, and are not storage vessels, so they are not subject to Subpart Kb.

Alcohol QC Tank (EU-DM 43)

The Alcohol QC Tank at the Nebraska facility contains ethanol which has been through the fermentation, distillation, dehydration, nitrogen stripping and blending processes, and holds the product from these processes. If the sample taken from the Alcohol QC Tank shows that the product meets the ADM specifications, the product is pumped into three storage vessels used for shipping purposes. If the sample does not meet specifications, the material is pumped back into the process, via the Alcohol Reclaim Tank.

Operations at the Alcohol QC Tank do not involve the type of unit operations or other functions (e.g., surge control or bottoms receiving) that are described in the rule, the preamble, or in the response to comments document. The operation performed at the tank is sampling. Obtaining a sample from a vessel at the end of the chemical and physical processing does not constitute processing as described

by the rulemaking. A tank which holds a product or by-product, whether on or off spec for ADM, is not involved in the same type of process functions as described in the rulemaking, and is no longer within the process.

Although ADM has stated that the Alcohol QC Tank is engaged in blending and mixing, there is no blending or mixing equipment in the Alcohol QC Tank. The denaturant and the corrosion inhibitor are not added directly to the Alcohol QC Tank, but are added in the pipeline to material exiting the Alcohol Day Tanks. The primary blending occurs in the piping. We do not consider the incidental mixing that occurs as material enters the Alcohol QC Tank as a mixing or blending process. Further, if the material in the Alcohol QC Tank is found to be off spec, the material is generally sent to the Alcohol Reclaim Tank, from which point it is sent back into the process. Although it is possible that a problem may be corrected simply by changing the amount of denaturant or corrosion inhibitor flowing into the piping, mixing in the piping with material from the Alcohol Day Tanks, and then entering the Alcohol QC Tank, the material is not actively mixed in the Alcohol QC Tank since the tank does not include any mixing or blending equipment. The Alcohol QC Tank simply holds the product of the process, ready for sampling.

Therefore, the Alcohol QC Tank is not a process tank; rather, it is a storage vessel as defined in the regulations. Since the Alcohol QC Tank has a capacity of greater than (or equal to) 75 cubic meters, is used to store a VOL, and construction will commence after July 23, 1984, the tank is subject to NSPS Subpart Kb.

Alcohol Reclaim Tank (EU-DM 40)

Product at the Nebraska facility that does not meet the ADM product specifications is pumped to the Alcohol Reclaim Tank. From there it is gradually sent back into the Alcohol Day Tanks for re-processing by blending with other material coming from the dehydration and nitrogen stripping processes. The piping is configured to allow the Alcohol Reclaim Tank to receive material from the Alcohol Day Tanks in the event that additional storage capacity is temporarily needed such as may occur in the event of equipment malfunction. No processing occurs in the Alcohol Reclaim Tank. It would normally function as storage for material being sent from the Alcohol QC Tank to the Alcohol Day Tanks for processing.

The Alcohol Reclaim Tank therefore serves as a feed vessel for reintroduction of material back into the process. The Alcohol Reclaim Tank itself is not within the process. It is a storage vessel, not a process tank.

This interpretation is consistent with EPA's decision to treat vessels that receive and accumulate solvent or raw material from recovery processes as storage vessels, not process tanks, as indicated in the preamble to the final rule. 68 FR 59330. These recovery processes contain process tanks, and produce material which may be used as a feedstock in the process. The storage of that material, which may be sent back into the process, is outside of the recovery process itself, and the tanks that contain that material are not considered process tanks.

Therefore, the Alcohol Reclaim Tank at the Nebraska facility is a storage vessel as defined in the regulations. Since the Alcohol Reclaim Tank has a capacity of greater than (or equal to) 75 cubic meters, is used to store a VOL, and construction will commence after July 23, 1984, the tank is subject to NSPS Subpart Kb.

This determination for the five proof ethanol tanks at the Nebraska ADM facility has been coordinated with the Office of Air Quality Planning and Standards, the Office of General Counsel, and EPA Region 7. Questions on this determination may be directed to Sally Harmon of my staff at 202-564-7012.

Very truly yours,

Michael S. Alushin, Director
Compliance Assessment and Media Programs Division
Office of Compliance

cc: Peter Wyckoff, Pillsbury Winthrop Shaw Pittman Dean Frommelt, Archer Daniels Midland

Attachment D

UM A CIFIC

DATE_____

PIC Dock Operations Finishing a Barge

Make sure you have read MSDS before handling chemicals.

Wear appropriate PPE.

PROCEDURE

STEP		INITIAL	TIME
NOTE	Once you have been notified by the barge to stop pumping do the following.		
1	Call control room Operator to get a stop on PC-6105.		
2	Then ask for a close on the shore valve HV-61577.		
3	Close the air to the Emergency shut off valve and drain air from the valve to allow to close.		
4	Close the air to the PFT flow control valve and drain air so valve can close.		
5	Open high and low point on barge side of emergency stop valve to drain the hose to the barge.		
6	When the suction on the low point drain is getting low, close low point drain to allow the barge to pump the remainder of product in the hose to the barge.		
7	Close the high point drain		
8	Close the manual dock valve		

me

DATE

9	Disconnect Oil Product hose.
	Disconnect Oil Vapor hose
	Finish filling out PIC paperwork.
12	Print Barge ticket
	Clean up any oil around the PFT or dock hose. Make sure rags get double bagged and brought back to onsite dumpster.
	Clean up PIC shack and make sure coffee pot has been cleaned and turned off.
	Garbage's in PIC shack emptied and new bags replaced.
	Shutdown VRU. Should be ran up to a hour after unloading the barge.
17	Clean up any oil rags, spills, or garbage outside at the VRU
	Clean up the VRU MCC
NOTE	Make sure Dock computer gets brought back to Main Process and delivered to a Supervisor.

SIGNED DATE

NAME

SUPERVISOR

COLUMBIA PACIFIC

DATE ____

Completion of Barge Loading

Make sure you have read MSDS before handling chemicals.

Wear appropriate PPE.

PROCEDURE

STEP		INITIAL	TIME
Note	A. Procedure for Com leting the Transfer Oeration.		
1	Stop the Flow after achieving your agreed upon total by shutting down PC-6105, Vapor Control System, and closing the MOV.		
2	Verify with the vessels person in charge that transfer operations are shut down.		
3	Drain transfer hoses.		
4	Close valves on the vessel.		
5	Disconnect, drain, cap hose ends, and properly stow all equipment.		
6	Remove any discharged oil or hazardous material from the discharge containment system.		
7	Complete post-transfer section of the Work Safety Assessment in the Barge Loading Procedure.		
8	Store completed copies of all dock paperwork in the administration office.		

>LUM JF' C DATE

Note	B. To Shutdown in the Event of an Emergenc
1	Alert the vessels person in charge.
2	Activate the emergency shutdown to close all valves on the system.
3	Ensure the vessels valves are closed.
4	Secure any possible sources of ignition.

SIGNED DATE

NAME

SUPERVISOR

COLUMBIA PACIFIC B

DATE_

Barge Loading

Make sure you have read MSDS before handling chemicals.

Wear appropriate PPE.

PROCEDURE

STEP		INITIAL	TIME
Note	A. Check transfer site		
1	Secure and check the area around transfer area.		
2	Check availability of the spill response equipment, supplies, and have H2S monitor on at all times.		
3	Anticipate what to do and who to call in case of a spill.		
4	Identify drainage paths and locate nearby storm drains.		
5	Identify vessel person in charge.		
Note	B. Contact Vessel		
1	Ensure that vessel PIC and his crewmembers are aware of CPBR Dock Rules.		
2	Agree on the use of a common language for communications.		
3	Establish and test adequacy of communication devices.		
4	Check that the vessel moorings are secure.		

UMBIA PACIFIC B

DATE

5	Check for closed overboard discharges, including sea suction valve, on vessel.
Note	C. Check Eguiment and Make Connections
1	If any part of the transfer operation will be between sunset and sunrise ensure permanent dock lighting is operable. Portable lighting will not be used.
2	Inspect hoses for damages.
3	Deploy and support hose of sufficient length to reach the vessel manifold.
4	Make proper hose connections for the product and for vapors.
5	Start the Vapor control system and put it on standby from the dock MCC.
6	Check discharge containment and empty into a sealed container if necessary.
7	Align and check transfer piping valves.
Note	D. Pre-Transfer Conference
1	Hold face to face pre-transfer conference with vessel person in charge.
2	Agree on types and quantities of oil products to be transferred.
3	Agree on transfer rates.
4	Review vessel loading plan and need to stop while topping off or switching tanks.
5	Identify vessel personnel on-duty during

COI PACIFIC DATE

	transfer and time of any watch change.
6	Agree on emergency shutdown signals and procedures.
7	Complete and sign the DOI and Work Safety Assessment in the Barge Loading Operations Procedure.
8	Double check operability of communications systems
9	Agree with the vessel person in charge to begin transfer.
Note	E. Start Transfer
1	Begin transfer by opening the shore MOV which allows pump PC- 6106 to be started.
2	The dock operator will set the flow rate at 1,000 barrels per hour (17 barrels per minute) by the flow control valve.
3	After the cargo tank bottoms are wet, stop PC-6106 and start PC-6105
4	Then increase the pump rate to 4,400 barrels per hour.(74 barrels per minute)
Note	F. During Transfer Oeration
1	Monitor transfer operation continuously.
2	Check transfer pressure and adjust as necessary.
3	Check valves, fittings, and connections for leaks. The whole line from tank farm to barge.
4	Check water surface for signs of oil in the

CO ,M A P. FIC DATE_

	water.
	Monitor storage tank levels and the barge levels.
Note	G. StoQ the Transfer If
1	Oil is spilled outside of the containment onto the ground or into the water.
2	Communications or power is lost
3	Lighting becomes inadequate.
4	Weather turns bad. Such as a electrical storm.

SIGNED DATE

NAME

SUPERVISOR

Attachment E

4245 - INNES

Chemcial	Antoine's Constants A	B	C	mol fraction in liquid	RVP Saturated Vapor Pressure	Partial Pressure	MTVP Saturated Vapor Pressure	Partial Pressure	
		deg C	deg C	x_i	p_{i0} (psi)	p_i (psi)	p_{i0} (psi)	p_i (psi)	
Methane	6.69561	405.42	267.777	0.001	4521.298	3.165	3643.725	2.551	
Ethane	6.83452	663.7	256.47	0.005	733.664	3.815	500.736	2.604	
Propane	6.80398	803.81	246.99	0.026	185.312	4.763	112.946	2.903	
Isobutane	6.91048	946.35	246.68	0.009	74.178	0.631	41.356	0.352	
N-Butane	6.80896	935.86	238.73	0.033	51.410	1.712	27.855	0.928	
Isopentane	6.83315	1040.73	235.445	0.015	20.453	0.309	10.171	0.154	
N-Pentane	6.87632	1075.78	233.205	0.026	15.600	0.401	7.483	0.192	
Hexane	6.87024	1168.72	224.21	0.041	4.966	0.205	2.110	0.087	
Heptane	6.89385	1264.37	216.636	0.844	1.625	1.372	0.607	0.513	
					Total VP	16.372		**5.127**	**psia**
					RVP Calculated	**11.569**	**psia**	**35.334**	**kPa**
					RVP Calculated	**79.721**	**kPa**		
					RVP from Assay	**82.4**	**kPa**		

For RVP		For MTVP	
37.8	C	63.75	F
100.04	F	17.63889	C
310.95	K	290.7889	K

11593 - FORGET

Chemcial	Antoine's Constants A	B	C	mol fraction in liquid	RVP Saturated Vapor Pressure	Partial Pressure	MTVP Saturated Vapor Pressure	Partial Pressure
		deg C	deg C	x_i	p_{i0} (psi)	p_i (psi)	p_{i0} (psi)	p_i (psi)
Methane	6.69561	405.42	267.777	0.002	4521.298	9.947	3643.725	8.016
Ethane	6.83452	663.7	256.47	0.007	733.664	5.136	500.736	3.505
Propane	6.80398	803.81	246.99	0.040	185.312	7.394	112.946	4.507
Isobutane	6.91048	946.35	246.68	0.014	74.178	1.068	41.356	0.596
N-Butane	6.80896	935.86	238.73	0.065	51.410	3.362	27.855	1.822
Isopentane	6.83315	1040.73	235.445	0.028	20.453	0.573	10.171	0.285
N-Pentane	6.87632	1075.78	233.205	0.050	15.600	0.786	7.483	0.377
Hexane	6.87024	1168.72	224.21	0.072	4.966	0.356	2.110	0.151
Heptane	6.89385	1264.37	216.636	0.721	1.625	1.172	0.607	0.438
					Total VP	29.794		**8.175** psia
					RVP Calculated	**19.014** psia		**56.333** kPa

flGflT® Laboratories

HYDROCARBON LIQUID ANALYSIS

Container Identification
4245

Operator Name	Previous Number	Laboratory Number
CRESCENT POINT ENERGY	12CS632646G	13CS715721C

Unique Well Identifier	Well Name
05-05-008-09W2	INNES 5-5 BATTERY

Field or Area	Pool or zone	Samplers Company
INNES	NOT APPLICABLE	AGAT/ESTEVAN

Well License | Elevation | Test Type | Test No. | Name of Sampler

KB m | GR m | GC

Test Interval or Perts mKB		Sampling Point
		TREATER OIL LEG

	Separator	Reservoir	Source	Sampled	Received
Pressure (kPa)			220	220	100
Temperature			24	24	23

Date Sampled	Date Received	Date Analyzed	Date Reported	Location - Approved By - Title
May 14, 2013	May 15, 2013	May 27, 2013	May 27, 2013	Calgary - Binh Nguyen - Reporter

Other Information

RVP @ 37.8°C = 82.4 kPa (PB5C)

• Results relate only to the Items tested

COMP.	MOLE FRACTION	MASS FRACTION	VOLUME FRACTION
N2	TRACE	TRACE	TRACE
CO2	0.0003	0.0001	0.0001
H2S	0.0000	0.0000	0.0000
C1	0.0057	0.0007	0.0018
C2	0.0234	0.0052	0.0114
C3	0.0786	0.0257	0.0395
IC4	0.0196	0.0085	0.0117
NC4	0.0774	0.0333	0.0445
IC5	0.0282	0.0151	0.0188
NC5	0.0480	0.0257	0.0317
C6	0.0656	0.0413	0.0481
C7+	0.6532	0.8444	0.7924
TOTAL	1.0000	1.0000	1.0000

Comparibly different from most recent sample: C1,C2,C3,IC4,NC4,IC5,NC5

This analysis and calculations are based on GPA 2186, GPA 2286, ASTM 2597, and ASTM 5307

Observed Properties of C7+ Residue (15/15° C)

Density	Relative Density	API @ 15°
830.7 kg/m³	0.8314	38.7

Relative Molecular Mass
174.3

Calculated Properties of Total Sample (15/15° C)

Density	Relative Density	API @ 15°
779.5 kg/m³	0.7802	49.9

Relative Molecular Mass	Gas Equivalency
134.8	136.7

Calculations for C6 and CI are based on Boiling Point Grouping. If Carbon Number Grouping had been done, the mole fractions would be (C6: 0.1002) (CI+:0.6186)

flGflT®Laboratories

PROPERTIES OF C6+ FRACTION

File No.	Company	UWI / LSD
13CS715721C	CRESCENT POINT ENERGY	05-05-008-09W2

BOILING POINT RANGE (C)	COMPONENT		MOLE FRACTION	MASS FRACTION	VOLUME FRACTION
36.1 - 68.9	HEXANES	C6	0.0603	0.0385	0.0452
68.9 - 98.3	HEPTANES	C7	0.0843	0.0652	0.0674
98.3 - 125.6	OCTANES	CB	0.0826	0.0723	0.0734
125.6 - 150.6	NONANES	C9	0.0577	0.0570	0.0562
150.6 - 173.9	DECANES	C10	0.0529	0.0580	0.0562
173.9 - 196.1	UNDECANES	C11	0.0425	0.0512	0.0491
196.1 - 215.0	DODECANES	C12	0.0386	0.0507	0.0480
215.0 - 235.0	TRIDECANES	C13	0.0272	0.0387	0.0363
235.0 - 252.2	TETRADECANES	C14	0.0281	0.0429	0.0399
252.2 - 270.6	PENTADECANES	C15	0.0211	0.0346	0.0319
270.6 - 287.8	HEXADECANES	C16	0.0204	0.0356	0.0326
287.8 - 302.8	HEPTADECANES	C17	0.0214	0.0396	0.0361
302.8 - 317.2	OCTADECANES	C18	0.0130	0.0256	0.0232
317.2 - 330.0	NONADECANES	C19	0.0104	0.0216	0.0195
330.0 - 344.4	EICOSANES	C20	0.0112	0.0243	0.0219
344.4 - 357.2	HENEICOSANES	C21	0.0124	0.0283	0.0253
357.2 - 369.4	DOCOSANES	C22	0.0070	0.0167	0.0149
369.4 - 380.0	TRICOSANES	C23	0.0070	0.0176	0.0156
380.0 - 391.1	TETRACOSANES	C24	0.0094	0.0246	0.0218
391.1 - 401.7	PENTACOSANES	C25	0.0043	0.0116	0.0102
401.7 - 412.2	HEXACOSANES	C26	0.0062	0.0175	0.0154
412.2 - 422.2	HEPTACOSANES	C27	0.0043	0.0127	0.0112
422.2 - 431.7	OCTACOSANES	C28	0.0042	0.0128	0.0113
431.7 - 441.1	NONACOSANES	C29	0.0030	0.0095	0.0083
441.1 - PLUS	TRIACONTANES	C30+	0.0056	0.0183	0.0160

BOILING POINT RANGE (C)	Aromatics		MOLE FRACTION	MASS FRACTION	VOLUME FRACTION
80.0	BENZENE	C6	0.0019	0.0012	0.0009
110.6	TOLUENE	C7	0.0041	0.0029	0.0024
136.2	ETHYLBENZENE	C8	0.0040	0.0040	0.0032
138.4 - 144.4	XYLENES	CB	0.0105	0.0086	0.0070
168.9	1,2,4 TRIMETHYLBENZENE	C9	0.0067	0.0062	0.0050

BOILING POINT RANGE (C)	Naphthenes		MOLE FRACTION	MASS FRACTION	VOLUME FRACTION
48.9	CYCLOPENTANE	CC5	0.0053	0.0028	0.0029
72.2	METHYLCYCLOPENTANE	MCC5	0.0257	0.0167	0.0158
81.1	CYCLOHEXANE	CC6	0.0070	0.0045	0.0041
101.1	METHYLCYCLOHEXANE	MCC6	0.0177	0.0134	0.0123

The above hexanes plus values are based upon a measured mass fraction and a calculated mole fraction, and assume a total hydrocarbon recovery from the chromatographic system.

flGflT® Laboratories

HYDROCARBON LIQUID ANALYSIS

Container Identification
18099

Operator Name	Previous Number	Laboratory Number
CRESCENT POINT ENERGY	12CS632646N	13CS715721H

Unique Well Identifier	Well Name
08-25-007-11W2	INNES 8-25 BATTERY

Field or Area	Pool or zone	Sampler's company
INNES	NOT APPLICABLE	AGAT/ESTEVAN

Licence | Elevation | Test Type | Test No. | Name of sampler

KBm | GRDm

Test Interval or Perts mKB		Sampling Point
		TREATER OIL LEG

	Separator	Reservoir	Source	Sampled	Received
Pressure (kPa)			310	310	300
Temperature			29	29	23

Date Sampled	Date Received	Date Analyzed	Date Reported	Location - Approved By • Title
May 14, 2013	May 15, 2013	May 27, 2013	May 27, 2013	Calgary - Binh Nguyen - Reporter

Other Information

RVP @ 37.8°C = 72.8 kPa (PB16H)

• Results relate only to the Items tested

COMP.	MOLE FRACTION	MASS FRACTION	VOLUME FRACTION
N2	0.0001	TRACE	TRACE
CO2	0.0004	0.0001	0.0001
H2S	0.0000	0.0000	0.0000
C1	0.0152	0.0017	0.0045
C2	0.0231	0.0049	0.0107
C3	0.0597	0.0185	0.0286
IC4	0.0162	0.0066	0.0092
NC4	0.0616	0.0252	0.0339
IC5	0.0264	0.0134	0.0168
NC5	0.0415	0.0210	0.0262
C6	0.0657	0.0393	0.0462
C7+	0.6901	0.8693	0.8238
TOTAL	1.0000	1.0000	1.0000

Comparibly different from most recent sample: C1, C2, C3, IC4, NC4, CS, NC5

This analysis and calculations are based on GPA 2186, GPA 2286, ASTM 2597, and ASTM 5307

Observed Properties of C7+ Residue (15/15° C)

Density	Relative Density	API @ 15°
829.1 kg/m³	0.8298	39.0

Relative Molecular Mass
179.2

Calculated Properties of Total Sample (15/15° C)

Density	Relative Density	API @ 15°
785.6 kg/m³	0.7863	48.4

Relative Molecular Mass	Gas Equivalency
142.2	130.6

Calculations for C6 and C7 are based on Boiling Point Grouping. If Carbon Number Grouping had been done, the mole fractions would be (C6: 0.1078) (C7+: 0.6480)

flGAT® Laboratories

PROPERTIES OF C6+ FRACTION

File No.	Company	UWI / LSD
13CS715721H	CRESCENT POINT ENERGY	08-25-007-11W2

BOILING POINT RANGE (C)	COMPONENT		MOLE FRACTION	MASS FRACTION	VOLUME FRACTION
36.1 - 68.9	HEXANES	C6	0.0611	0.0370	0.0438
68.9 - 98.3	HEPTANES	C7	0.0883	0.0731	0.0760
98.3 - 125.6	OCTANES	CB	0.0922	0.0873	0.0883
125.6 - 150.6	NONANES	C9	0.0626	0.0664	0.0658
150.6 - 173.9	DECANES	C10	0.0588	0.0692	0.0674
173.9 - 196.1	UNDECANES	C11	0.0450	0.0581	0.0561
196.1 - 215.0	DODECANES	C12	0.0351	0.0494	0.0470
215.0 - 235.0	TRIDECANES	C13	0.0305	0.0465	0.0439
235.0 - 252.2	TETRADECANES	C14	0.0289	0.0474	0.0443
252.2 - 270.6	PENTADECANES	C15	0.0257	0.0450	0.0418
270.6 - 287.8	HEXADECANES	C16	0.0155	0.0290	0.0267
287.8 - 302.8	HEPTADECANES	C17	0.0169	0.0336	0.0308
302.8 - 317.2	OCTADECANES	C18	0.0130	0.0273	0.0249
317.2 - 330.0	NONADECANES	C19	0.0120	0.0266	0.0241
330.0 - 344.4	EICOSANES	C20	0.0086	0.0200	0.0181
344.4 - 357.2	HENEICOSANES	C21	0.0096	0.0235	0.0212
357.2 - 369.4	DOCOSANES	C22	0.0053	0.0136	0.0122
369.4 - 380.0	TRICOSANES	C23	0.0057	0.0153	0.0137
380.0 - 391.1	TETRACOSANES	C24	0.0048	0.0135	0.0120
391.1 - 401.7	PENTACOSANES	C25	0.0037	0.0108	0.0096
401.7 - 412.2	HEXACOSANES	C26	0.0029	0.0089	0.0079
412.2 - 422.2	HEPTACOSANES	C27	0.0019	0.0059	0.0052
422.2 - 431.7	OCTACOSANES	C2B	0.0005	0.0017	0.0015
431.7 - 441.1	NONACOSANES	C29	0.0001	0.0003	0.0003
441.1 - PLUS	TRIACONTANES	C30+	0.0002	0.0007	0.0006

BOILING POINT RANGE (C)	Aromatics		MOLE FRACTION	MASS FRACTION	VOLUME FRACTION
80.0	BENZENE	C6	0.0054	0.0035	0.0028
110.6	TOLUENE	C7	0.0177	0.0135	0.0111
136.2	ETHYLBENZENE	CB	0.0060	0.0053	0.0043
138.4 - 144.4	XYLENES	CB	0.0196	0.0172	0.0141
168.9	1,2,4 TRIMETHYLBENZENE	C9	0.0074	0.0073	0.0060

BOILING POINT RANGE (C)	Naphthenes		MOLE FRACTION	MASS FRACTION	VOLUME FRACTION
4B.9	CYCLOPENTANE	CC5	0.0046	0.0023	0.0024
72.2	METHYLCYCLOPENTANE	MCC5	0.0257	0.0179	0.0170
B1.1	CYCLOHEXANE	CC6	0.0110	0.0076	0.0070
101.1	METHYLCYCLOHEXANE	MCC6	0.0295	0.0239	0.0221

The above hexanes plus values are based upon a measured mass fraction and a calculated mole fraction, and assume a total hydrocarbon recovery from the chromatographic system.

flGAT®Laboratories

HYDROCARBON LIQUID ANALYSIS

Container Identification
8000018

Operator Name	Laboratory Number
CRESCENT POINT ENERGY	13CS715721K

Unique Well Identifier	Well Name
09-13-007-11W2	MIDALE 9-13 BATTERY

Field or Area	Pool or zone	Sampler's company
MIDALE	NOT APPLICABLE	AGAT/ESTEVAN

Well License	Elevation	Test Type	Test No.	Name of sampler
KB ml	GRD ml			GC

Test Interval or Perts mKB		Sampling Point
		DOWNSTREAM

	Separator	Reservoir	Source	Sampled	Received
Pressure (kPa)			150	150	100
Temperature			22	22	23

Date Sampled	Date Received	Date Analyzed	Date Reported	Location - Approved By - Title
May 14, 2013	May 15, 2013	May 27, 2013	May 27, 2013	Calgary - Binh Nguyen - Reporter

Other Information

DOWNSTREAM ENBRIDGE SHIPPING PUMP, RVP @ 37.8°C = 71.18 kPa (PB20K)

• Results relate only to the Items tested

COMP.	MOLE FRACTION	MASS FRACTION	VOLUME FRACTION
N2	TRACE	TRACE	TRACE
C02	TRACE	TRACE	TRACE
H2S	0.0000	0.0000	0.0000
C1	0.0001	TRACE	TRACE
C2	0.0029	0.0005	0.0012
C3	0.0358	0.0095	0.0154
IC4	0.0145	0.0051	0.0074
NC4	0.0611	0.0215	0.0302
IC5	0.0250	0.0109	0.0143
NC5	0.0431	0.0188	0.0245
C6	0.0596	0.0306	0.0375
C7+	0.7579	0.9031	0.8695
TOTAL	1.0000	1.0000	1.0000

This analysis and calculations are based on GPA 2186, GPA 2286, ASTM 2597, and ASTM 5307

Observed Properties of C7+ Residue (15/15° C)

Density	*Relative Density*	*API @ 15°*
852.8 kg/m³	0.8536	34.3

Relative Molecular Mass
196.9

Calculated Properties of Total Sample (15/15° C)

Density	*Relative Density*	*API @ 15°*
821.0 kg/m³	0.8217	40.7

Relative Molecular Mass	*Gas Equivalency*
1652	117.5

Calculations for C6 and C1 are based on Boiling Point Grouping. If Carbon Number Grouping had been done, the mole fractions would be (C6: 0.1033) (C7+: 0.7142)

flGflT®Laboratories

PROPERTIES OF C6+ FRACTION

File No.	Company	UWI / LSD
13CS715721K	CRESCENT POINT ENERGY	09-13-007-11W2

BOILING POINT RANGE (C)	COMPONENT		MOLE FRACTION	MASS FRACTION	VOLUME FRACTION
36.1 - 68.9	HEXANES	C6	0.0545	0.0284	0.0351
68.9 - 98.3	HEPTANES	C7	0.1017	0.0743	0.07B6
9B.3 - 125.6	OCTANES	C8	0.09B4	0.0820	O.OB47
125.6 - 150.6	NONANES	C9	0.06B3	0.0638	0.0643
150.6 - 173.9	DECANES	C10	0.0619	0.0642	0.0637
173.9 - 196.1	UNDECANES	C11	0.0490	0.0559	0.0548
196.1 - 215.0	DODECANES	C12	0.0445	0.0552	0.0535
215.0 - 235.0	TRIDECANES	C13	0.0327	0.0440	0.0423
235.0 - 252.2	TETRADECANES	C14	0.0311	0.0449	0.0427
252.2 - 270.6	PENTADECANES	C15	0.0244	0.0377	0.0356
270.6 - 2B7.8	HEXADECANES	C16	0.0213	0.0352	0.0330
2B7.8 - 302.B	HEPTADECANES	C17	0.0299	0.0524	0.0488
302.B - 317.2	OCTADECANES	C18	0.0114	0.0212	0.0197
317.2 - 330.0	NONADECANES	C19	0.011B	0.0230	0.0212
330.0 - 344.4	EICOSANES	C20	0.0124	0.0254	0.0234
344.4 - 357.2	HENEICOSANES	C21	0.0139	0.0301	0.0276
357.2 - 369.4	DOCOSANES	C22	0.007B	0.0177	0.0162
369.4 - 3BO.O	TRICOSANES	C23	0.0077	0.0182	0.0166
3BO.O - 391.1	TETRACOSANES	C24	0.008B	0.0217	0.0197
391.1 - 401.7	PENTACOSANES	C25	0.0057	0.0146	0.0132
401.7 - 412.2	HEXACOSANES	C26	0.0064	0.0172	0.0155
412.2 - 422.2	HEPTACOSANES	C27	0.0053	0.014B	0.0134
422.2 - 431.7	OCTACOSANES	C2B	0.0036	0.0104	0.0094
431.7 - 441. 1	NONACOSANES	C29	0.0030	0.0088	0.0079
441.1 - PLUS	TRIACONTANES	C30+	0.0014	0.0045	0.0040

BOILING POINT RANGE (C)	Aromatics		MOLE FRACTION	MASS FRACTION	VOLUME FRACTION
BO.O	BENZENE	C6	0.0024	0.0014	0.0011
110.6	TOLUENE	C7	0.0051	0.0034	0.0028
136.2	ETHYLBENZENE	CB	0.0062	0.004B	0.0040
13B.4 - 144.4	XYLENES	CB	0.0118	0.0091	0.0076
168.9	1,2,4 TRIMETHYLBENZENE	C9	0.0077	0.0068	0.0057

BOILING POINT RANGE (C)	Naphthenes		MOLE FRACTION	MASS FRACTION	VOLUME FRACTION
48.9	CYCLOPENTANE	CC5	0.0051	0.0022	0.0024
722	METHYLCYCLOPENTANE		0.0327	0.0200	0.0194
	MCC5 B1.1 CYCLOHEXANE		O.OOB6	0.0053	0.0049
	CC6 101.1 METHYLCYCLOHEXANE		0.0210	0.0151	0.0142
	MCC6				

The above hexanes plus values are based upon a measured mass fraction and a calculated mole fraction, and assume a total hydrocarbon recovery from the chromatographic system.

flGflT® Laboratories

HYDROCARBON LIQUID ANALYSIS

Container Identification
30554

Operator Name	Laboratory Number
CRESCENT POINT ENERGY	13CS7 15721N

Unique Well Identifier	Well Name
09-14-009-08W2	MELROSE 9-14 BATTERY

Field or Area	Pool or zone	sampler's company
MELROSE	NOT APPLICABLE	AGAT/ESTEVAN

Well License	KB m	Elev m	Test Type	Test No.	Name of Sampler

Test Interval or Perts mKB		Sampling Point
		TREATER OIL

	Separator	Reservoir	Source	Sampled	Received
Pressure (kPa)			80	80	100
Temperature			23	23	23

Date Sampled	Date Received	Date Analyzed	Date Reported	Location Approved By Title
May 14, 2013	May 15, 2013	May 27, 2013	May 27, 2013	Calgary - Binh Nguyen - Reporter

Other Information

RVP @ 37.8°C = 63.98 kPa

Results relate only to the items tested

COMP.	MOLE FRACTION	MASS FRACTION	VOLUME FRACTION
N2	TRACE	TRACE	TRACE
C02	0.0001	TRACE	TRACE
H2S	0.0000	0.0000	0.0000
C1	0.0031	0.0004	0.0009
C2	0.0144	0.0031	0.0069
C3	0.0716	0.0230	0.0355
IC4	0.0221	0.0093	0.0130
NC4	0.0753	0.0318	0.0428
IC5	0.0276	0.0145	0.0182
NC5	0.0450	0.0236	0.0294
C6	0.0613	0.0379	0.0445
C7+	0.6795	0.8564	0.8088
TOTAL	1.0000	1.0000	1.0000

This analysis and calculations are based on GPA 2186, GPA 2286, ASTM 2597, and ASTM 5307

Observed Properties of C7+ Residue (15/15° C)

Density	*Relative Density*	*API @ 15°*
830.9 kg/m³	0.8316	38.6

Relative Molecular Mass
173.2

Calculated Properties of Total Sample (15/15° C)

Density	*Relative Density*	*API @ 15°*
784.7 kg/m³	0.7855	48.7

Relative Molecular Mass	*Gas Equivalency*
137.4	135.0

Calculations for C6 and C7 are based on Boiling Point Grouping. If Carbon Number Grouping had been done, the mole fractions would be (C6: 0.0964) (C1+: 0.6444)

flGflT® Laboratories +

PROPERTIES OF C6+ FRACTION

File No.	Company	UWI/LSD
13CS715721N	CRESCENT POINT ENERGY	09-14-009-0aW2

BOILING POINT RANGE (C)	COMPONENT		MOLE FRACTION	MASS FRACTION	VOLUME FRACTION
36.1 - 6a.9	HEXANES	C6	0.0566	0.0355	0.0420
6a.9 - 9a.3	HEPTANES	C7	O.Oa77	0.0664	0.0691
9a.3 - 125.6	OCTANES	ca	o.oa11	0.0700	0.0707
125.6 - 150.6	NONANES	C9	0.0636	0.0615	0.0610
150.6 - 173.9	DECANES	C10	0.0521	0.0559	0.0545
173.9 - 196.1	UNDECANES	C11	0.0471	0.0555	0.0536
196.1 - 215.0	DODECANES	C12	0.0375	0.04a2	0.0459
215.0 - 235.0	TRIDECANES	C13	0.0321	0.0445	0.0421
235.0 - 252.2	TETRADECANES	C14	o.02a5	0.0426	0.039a
252.2 - 270.6	PENTADECANES	C15	0.0225	0.0359	0.0334
270.6 - 2a7.a	HEXADECANES	C16	0.0216	0.0368	0.0340
2a7.a - 302.a	HEPTADECANES	C17	0.0231	0.0419	0.03a4
302.a - 317.2	OCTADECANES	C1a	0.0142	0.0272	0.024a
317.2 - 330.0	NONADECANES	C19	0.0111	0.0224	0.0204
330.0 - 344.4	EICOSANES.	C20	0.0121	0.0258	0.0233
344.4 - 357.2	HENEICOSANES	C21	0.0129	0.0288	0.0260
357.2 - 369.4	DOCOSANES.	C22	0.0065	0.0153	0.0137
369.4 - 3ao.o	TRICOSANES.	C23	0.0084	0.0204	o.01a3
3ao.o - 391.1	TETRACOSANES	C24	0.0095	0.0242	0.0216
391.1 - 401.7	PENTACOSANES	C25	0.0043	0.0114	0.0101
401.7 - 412.2	HEXACOSANES	C26	0.0060	0.0166	0.0147
412.2 - 422.2	HEPTACOSANES	C27	0.0054	0.0154	0.0137
422.2 - 431.7	OCTACOSANES	C28	0.0041	0.0121	o.01oa
431.7 - 441.1	NONACOSANES	C29	0.0032	0.009a	o.ooa6
441.1 - PLUS	TRIACONTANES	C30+	0.0031	0.0098	o.ooa6

BOILING POINT RANGE (C)	Aromatics		MOLE FRACTION	MASS FRACTION	VOLUME FRACTION
ao.o	BENZENE	C6	0.0012	0.0007	0.0006
110.6	TOLUENE	C7	0.0104	0.0072	0.0059
136.2	ETHYLBENZENE..	CB	0.0022	0.0018	0.0015
13a.4 - 144.4	XYLENES	ca	0.0098	0.007a	0.0064
16a.9	1,2,4 TRIMETHYLBENZENE	C9	0.0064	0.005a	0.004a

BOILING POINT RANGE (C)	Naphthenes		MOLE FRACTION	MASS FRACTION	VOLUME FRACTION
4a.9	CYCLOPENTANE	CC5	0.0047	0.0024	0.0025
72.2	METHYLCYCLOPENTANE		0.0274	0.0174	0.0165
MCC5 a1.1	CYCLOHEXANE	CC6	0.0065	0.0041	0.003a
101.1	METHYLCYCLOHEXANE..		0.0179	0.0132	0.0122
	MCC6				

The above hexanes plus values are based upon a measured mass fraction and a calculated mole fraction, and assume a total hydrocarbon recovery from the chromatographic system.

Calgary AB, Ph:(403) 299-2000. Edmonton AB, Ph:(780) 469-0106. Grande Prairie AB, Ph:(780) 539-6500. Red Deer AB, Ph: (403) 346-6645.
Fort St. John BC, Ph:(250) 785-5500. Prince George BC, Ph: (250) 563-6011, Terrace BC, Ph:(250) 615-9288. Mississauga ON, Ph:(905) 501-9998.

flGflT®Laboratories

HYDROCARBON LIQUID ANALYSIS

Container Identification
11593

Operator Name	Previous Number	Laboratory Number
CRESCENT POINT ENERGY	12CS667985B	13CS715721L

Unique Well Identifier	Well Name
09-32-007-07W2	SOUTH FORGET 9-32 BATTERY

Field Area	Prior Zone	Sampler Company
FORGET	NOT APPLICABLE	AGAT/ESTEVAN

Well License	Elevation	Test Type	Test No.	Name of Sampler
			1	

K sml GRo mj GC

Test Interval or Perts mKB	Sampling Point		Separator	Reservoir	Source	Sampled	Received
	TREATER OIL	Pressure (kPa)			140	140	100
		Temperature			22	22	23

Date Sampled	Date Received	Date Analyzed	Date Reported	Location - Approved By - Title
May 14, 2013	May 15, 2013	May 27, 2013	May 27, 2013	Calgary - Binh Nguyen - Reporter

Other Information

RVP @ 37.8°C= 82.38 kPa (PB21L)

Results relate only to the items tested

COMP.	MOLE FRACTION	MASS FRACTION	VOLUME FRACTION
N2	TRACE	TRACE	TRACE
C02	TRACE	TRACE	TRACE
H2S	0.0000	0.0000	0.0000
C1	0.0022	0.0003	0.0007
C2	0.0070	0.0015	0.0033
C3	0.0399	0.0125	0.0194
IC4	0.0144	0.0060	0.0083
NC4	0.0654	0.0270	0.0364
IC5	0.0280	0.0144	0.0181
NC5	0.0504	0.0259	0.0322
C6	0.0717	0.0432	0.0508
C7+	0.7210	0.8692	0.8308
TOTAL	1.0000	1.0000	1.0000

This analysis and calculations are based on GPA 2186, GPA 2286, ASTM 25g7, and ASTM 5307

Observed Properties of C7+ Residue (15/15° C)

Density	Relative Density	API @ 15°
821.8 kg/m³	0.8225	40.5

Relative Molecular Mass
169.5

Calculated Properties of Total Sample (15/15° C)

Density	Relative Density	API @ 15°
785.6 kg/m³	0.7863	48.5

Relative Molecular Mass	Gas Equivalency
140.6	132.2

Calculations for C6 and CI are based on Boiling Point Grouping. If Carbon Number Grouping had been done, the mole fractions would be (C6: 0.1124) (C?+:0.6803)

flGflT®Laboratories

PROPERTIES OF C6+ FRACTION

File No.	Company	UWI / LSD
13CS715721L	CRESCENT POINT ENERGY	09-32-007-07W2

BOILING POINT RANGE (C)	COMPONENT		MOLE FRACTION	MASS FRACTION	VOLUME FRACTION
36.1 6B.9	HEXANES	C6	0.0654	0.0401	0.0475
6B.9 9B.3	HEPTANES	C7	0.0962	0.0718	0.0754
9B.3 - 125.6	OCTANES	CB	0.0949	0.0806	O.OB22
125.6 - 150.6	NONANES	C9	0.0655	0.0625	0.0625
150.6 - 173.9	DECANES	C10	0.0565	0.0597	0.05BB
173.9 - 196.1	UNDECANES	C11	0.0509	0.0591	0.0576
196.1 - 215.0	DODECANES	C12	0.0433	0.054B	0.0527
215.0 - 235.0	TRIDECANES	C13	0.0315	0.0432	0.0412
235.0 - 252.2	TETRADECANES	C14	0.0297	0.0438	0.0413
252.2 - 270.6	PENTADECANES	C15	0.0230	0.0362	0.0340
270.6 - 2B7.B	HEXADECANES	C16	0.021B	0.0366	0.0341
2B7.B - 302.B	HEPTADECANES	C17	0.022B	0.0408	0.0377
302.B - 317.2	OCTADECANES	C1B	0.0136	0.0257	0.0237
317.2 - 330.0	NONADECANES	C19	0.0106	0.0212	0.0194
330.0 - 344.4	EICOSANES	C20	0.0116	0.0244	0.0223
344.4 - 357.2	HENEICOSANES	C21	0.0112	0.0246	0.0224
357.2 - 369.4	DOCOSANES	C22	0.0070	0.0162	0.0147
369.4 - 3BO.O	TRICOSANES	C23	0.0077	0.01B5	0.0167
3BO.O - 391.1	TETRACOSANES	C24	O.OOB1	0.0205	0.01B5
391.1 - 401.7	PENTACOSANES	C25	0.0043	0.0111	0.0100
401.7 - 412.2	HEXACOSANES	C26	0.0057	0.0157	0.0140
412.2 - 422.2	HEPTACOSANES	C27	0.0045	0.0127	0.0113
422.2 - 431.7	OCTACOSANES	C28	0.003B	0.0111	0.0100
431.7 - 441. 1	NONACOSANES	C29	0.0022	0.0068	0.0061
441.1 - PLUS	TRIACONTANES	C30+	0.0020	0.0062	0.0055

BOILING POINT RANGE (C)	Aromatics		MOLE FRACTION	MASS FRACTION	VOLUME FRACTION
B0.0	BENZENE	C6	0.0022	0.0013	0.0011
110.6	TOLUENE	C7	0.0050	0.0034	0.002B
136.2	ETHYLBENZENE	CB	0.0060	0.0047	0.0039
13B.4 - 144.4	XY LENES	CB	0.0127	0.0100	O.OOB3
16B.9	1,2,4 TRIMETHYLBENZENE	C9	O.OOB1	0.0072	0.0060

BOILING POINT RANGE (C)	Naphthenes		MOLE FRACTION	MASS FRACTION	VOLUME FRACTION
4B.9	CYCLOPENTAN E	CC5	0.0063	0.0031	0.0033
72.2	METHYLCYCLOPENTANE	MCC5	0.0303	0.0190	0.01B2
B1.1	CYCLOHEXANE	CC6	0.0082	0.0051	0.0047
101.1	METHYLCYCLOHEXANE	MCC6	0.0201	0.0147	0.0137

The above hexanes plus values are based upon a measured mass fraction and a calculated mole fraction, and assume a total hydrocarbon recovery from the chromatographic system.

flGflT® Laboratories

HYDROCARBON LIQUID ANALYSIS

Container Identification
1244

Operator Name	Laboratory Number
CRESCENT POINT ENERGY	13CS715721E

Unique Well Identifier	Well Name
12-15-008-08W2	STOUGHTON 12-5 BATTERY

Field or Area	Pool or zone	Sampler Company
STOUGHTON	NOT APPLICABLE	AGAT/ESTEVAN

Live Well License	Elevation	Test Type	Test No.	Name of sampler
	Ksml IGRoml			

Test Interval or Perfs mKB		Sampling Point
		TREATER OIL LEG

	Separator	Reservoir	Source	Sampled	Received
Pressure (kPa)			235	235	100
Temperature			25	25	23

Date Sampled	Date Received	Date Analyzed	Date Reported	Location - Approved By - Title
May 14, 2013	May 15, 2013	May 27, 2013	May 27, 2013	Calgary - Binh Nguyen - Reporter

Other Information

RVP @ 37.8°C = 67.2 kPa (PB9E)

*Results relate only to the items tested

COMP.	MOLE FRACTION	MASS FRACTION	VOLUME FRACTION
N2	TRACE	TRACE	TRACE
C02	0.0001	TRACE	TRACE
H2S	0.0000	0.0000	0.0000
C1	0.0035	0.0004	0.0010
C2	0.0146	0.0031	0.0069
C3	0.0581	0.0182	0.0283
IC4	0.0165	0.0068	0.0096
NC4	0.0661	0.0273	0.0369
IC5	0.0261	0.0134	0.0169
NC5	0.0451	0.0231	0.0290
C6	0.0644	0.0388	0.0457
C7+	0.7055	0.8689	0.8257
TOTAL	1.0000	1.0000	1.0000

This analysis and calculations are based on GPA 2186, GPA 2286, ASTM 2597, and ASTM 5307

Observed Properties of C7+ Residue (15/15° C)

Density	Relative Density	API @ 15°
831.1 kg/m³	0.8318	38.6

Relative Molecular Mass
173.4

Calculated Properties of Total Sample (15/15° C)

Density	Relative Density	API @ 15°
789.7 kg/m³	0.7905	47.5

Relative Molecular Mass	Gas Equivalency
140.8	132.6

Calculations for C6 and CI are based on Boiling Point Grouping. If Carbon Number Grouping had been done, the mole fractions would be (C6: 0.1030) (CI+:0.6669)

flGflT®Laboratories

PROPERTIES OF C6+ FRACTION

File No.	Company	UWI / LSD
13CS715721E	CRESCENT POINT ENERGY	12-15-008-08W2

BOILING POINT RANGE (C)	COMPONENT		MOLE FRACTION	MASS FRACTION	VOLUME FRACTION
36.1 - 68.9	HEXANES	C6	0.0590	0.0361	0.0429
68.9 - 98.3	HEPTANES	C7	0.0907	0.0675	0.0706
98.3 - 125.6	OCTANES	C8	0.0896	0.0761	0.0778
125.6 - 150.6	NONANES	C9	0.0624	0.0595	0.0594
150.6 - 173.9	DECANES	C10	0.0577	0.0611	0.0599
173.9 - 196.1	UNDECANES	C11	0.0462	0.0537	0.0521
196.1 - 215.0	DODECANES	C12	0.0422	0.0535	0.0512
215.0 - 235.0	TRIDECANES	C13	0.0297	0.0408	0.0387
235.0 - 252.2	TETRADECANES	C14	0.0321	0.0474	0.0446
252.2 - 270.6	PENTADECANES	C15	0.0217	0.0342	0.0320
270.6 - 287.8	HEXADECANES	C16	0.0220	0.0371	0.0344
287.8 - 302.8	HEPTADECANES	C17	0.0233	0.0417	0.0384
302.8 - 317.2	OCTADECANES	C18	0.0141	0.0267	0.0245
317.2 - 330.0	NONADECANES	C19	0.0112	0.0224	0.0205
330.0 - 344.4	EICOSANES	C20	0.0121	0.0255	0.0232
344.4 - 357.2	HENEICOSANES	C21	0.0107	0.0235	0.0213
357.2 - 369.4	DOCOSANES	C22	0.0094	0.0218	0.0197
369.4 - 380.0	TRICOSANES	C23	0.0074	0.0180	0.0161
380.0 - 391.1	TETRACOSANES	C24	0.0086	0.0216	0.0194
391.1 - 401.7	PENTACOSANES	C25	0.0050	0.0132	0.0118
401.7 - 412.2	HEXACOSANES	C26	0.0067	0.0182	0.0162
412.2 - 422.2	HEPTACOSANES	C27	0.0048	0.0136	0.0121
422.2 - 431.7	OCTACOSANES	C28	0.0042	0.0124	0.0111
431.7 - 441.1	NONACOSANES	C29	0.0030	0.0090	0.0080
441.1 - PLUS	TRIACONTANES	C30+	0.0026	0.0081	0.0072

BOILING POINT RANGE (C)	Aromatics		MOLE FRACTION	MASS FRACTION	VOLUME FRACTION
80.0	BENZENE	C6	0.0029	0.0017	0.0014
110.6	TOLUENE	C7	0.0054	0.0037	0.0030
136.2	ETHYLBENZENE	C8	0.0060	0.0048	0.0039
138.4 - 144.4	XYLENES	C8	0.0119	0.0094	0.0078
168.9	1,2,4 TRIMETHYLBENZENE	C9	0.0073	0.0065	0.0054

BOILING POINT RANGE (C)	Naphthenes		MOLE FRACTION	MASS FRACTION	VOLUME FRACTION
48.9	CYCLOPENTANE	CC5	0.0054	0.0027	0.0028
72.2	METHYLCYCLOPENTANE	MCC5	0.0279	0.0175	0.0167
81.1	CYCLOHEXANE	CC6	0.0078	0.0049	0.0045
101.1	METHYLCYCLOHEXANE	MCC6	0.0189	0.0138	0.0128

The above hexanes plus values are based upon a measured mass fraction and a calculated mole fraction, and assume a total hydrocarbon recovery from the chromatographic system.

Attachment F

Facility Name: Columbia Pacific Bio-Refinery *Permit Number:* TBD

1. Emissions Point	Production Rates: 2. Short-term (Specify units)	Production Rates: 3. Annual (Specify units)	4. Pollutant	Emission Factors: 5. Short-term	Emission Factors: 6. Long-term	Emission Factors: 7. Reference(s)	Emissions: 8. Short-term (Specify units)	Emissions: 9. Annual (tons/year)
EP01-EU02	1.8 kgal/hr	15768 kgal/yr	PM/PM10/PM2.5	0.7 lb/kgal	0.7 lb/kgal	AP-42 Sec 1.4	1.24 lb/hr	**3.83**
EP01-EU02	1.8 kgal/hr	15768 kgal/yr	NO_x	2.128 lb/kgal	2.128 lb/kgal	Manufacturer	3.76 lb/hr	**11.64**
EP01-EU01	1,050 kgal/hr	1,839.6 kgal	SO2	0.0045 lb/kgal	0.0045 lb/kgal	Engineering Est	4.71 lb/hr	4.13
EP01-EU02	1.8 kgal/hr	15768 kgal/yr	SO2	0.100 lb/kgal	0.100 lb/kgal	AP-42 Sec 1.4	0.18 lb/hr	0.55
TOTAL			**SO2**					**4.7**
EP01-EU01	1,050 kgal/hr	1,839.6 kgal	VOC	0.0265 lb/kgal	0.0265 lb/kgal	Engineering Est	27.83 lb/hr	24.37
FS01	1,050 kgal/hr	1,839.6 kgal	VOC	11.75 lb/kgal	11.75 lb/kgal	AP-42 Sec 7.1	3,288.48 lb/hr	35.89
FS02	1 hour	8,760 hours	VOC	0.03 lb/hr	0.03 lb/hr	EPA-453/R95017	0.03 lb/hr	0.15
FS03	1,050 kgal/hr	1,839.6 kgal	VOC	0.0172 lb/kgal	0.0172 lb/kgal	AP-42 Sec 5.2	18.09 lb/hr	15.82
FS04	1 event	1 event	VOC	2520 lb/event	2520 lb/event	Engineering Est	2520 lb/event	1.26
TOTAL			**VOC**					**77.5**
EP01-EU01	1,050 kgal/hr	1,839.6 kgal	H2S	2.7E-4 lb/kgal	2.7E-4 lb/kgal	Engineering Est	0.28 lb/hr	0.02
FS01	1,050 kgal/hr	1,839.6 kgal	H2S	0.023 lb/kgal	0.023 lb/kgal	Tanks 4.0.9d	6.58 lb/hr	0.07
FS02	1 hour	8,760 hours	H2S	0.001 lb/hr	0.001 lb/hr	EPA-453/R95017	0.00 lb/hr	0.00
FS03	1,050 kgal/hr	1,839.6 kgal	H2S	3.4E-5 lb/kgal	3.4E-5 lb/kgal	Engineering Est	0.04 lb/hr	0.03
FS04	1 event	1 event	H2S	5.04 lb/event	5.04 lb/event	Engineering Est	5.04 lb/event	0.00
TOTAL			**H2S**					**0.12**
Example	200 tons of rock/hr	400,000 tons	PM	0.04 lb/ton	0.04 lb/ton	DEQ	8.0 lb/hr	8.0

COLUMBIA PACIFIC BIO-REFINERY
TERMINAL OPERATIONS - POTENTIAL EMISSIONS SUMMARY

EP#	CE#	EU#	Emission Unit Description	PM/PM10/PM2.5		NOx		SO2		VOC		CO		GHG (CO2e)		H2S		HAPs	
					limited		limited		limited		limited	limited			limited		limited		limited
				lb/hr	tpy	lb/hr	tpy	lb/hr	tpy	lb/hr	tpy	lb/hr	tpy	lb/hr	tpy	lb/hr	tpy	lb/hr	tpy
EP01	CE01	EU01	VCU (Vapor Destruction)	---	---	---	---	4.7	4.1	27.8	24.4	---	---	91.9	80.5	0.278	0.024	1.40	1.23
EP01	CE01	EU02	VCU (Propane Combustion)	1.2	3.8	3.8	11.6	0.2	0.5	---	---	1.6	5.1	22,210.3	68,725.5	---	---	0.28	1.22
FS01	---	TK6153-6158	Storage Tanks	---	---	---	---	---	---	3,288.5	35.9	---	---	513.2	5.6	6.58	7.2E-02	0.1	0.6
FS02	---	---	Tank Farm Equipment Leaks	---	---	---	---	---	---	0.0	0.1	---	---	0.0	0.0	6.7E-05	2.9E-04	negligible	negligible
FS03	---	---	Loadout Fugitives (Leaks)	---	---	---	---	---	---	18.1	15.8	---	---	2.8	2.5	0.0	0.0	0.91	0.80
FS04	---	---	Process Tanks	---	---	---	---	---	---	1,259.7	1.3	---	---	198.1	0.0	2.5	0.0	9.68	0.01
TOTAL				**PM/PM10/PM2.5**		**NOx**		**SO2**		**VOC**		**CO**		**GHG (CO2e)**		**H2S**		HAPs	
				lb/hr	**tpy**	**lb/hr**	**tpy**	**lb/hr**	**tpy**	**lb/hr**	**tpy**	**lb/hr**	**tpy**	**lb/hr**	**tpy**	**lb/hr**	**tpy**	**lb/hr**	**tpy**
				1.2	**3.8**	**3.8**	**11.6**	**4.9**	**4.7**	**4,594.2**	**77.5**	**1.6**	**5.1**	**23,016.3**	**68,814.1**	**9.4**	**0.1**	**12.4**	**3.9**

COLUMBIA PACIFIC BIO-REFINERY
WATER-BORNE VESSEL LOADOUT VAPOR COMBUSTION UNIT (VAPOR DESTRUCTION)

EP#	CE#	EU No.	Pollutant	CAS No.	Throughput		Emission Factor		Emission Factor Citation	Potential to Emit lb/hr	Potential to Emit TPY
EP01	CE01	EU01	SO2	7446-09-5	1,050.0	kgal/hr	0.0045	lb/kgal	Engineering Estimate	4.71	4.13
EP01	CE01	EU01	VOC	---	1,050.0	kgal/hr	0.03	lb/kgal	Engineering Estimate	27.83	24.37
EP01	CE01	EU01	GHG (CO2e)	---	1,050.0	kgal/hr	0.004	lb/kgal	Engineering Estimate	91.87	80.48
EP01	CE01	EU01	H2S	7783-06-4	1,050.0	kgal/hr	2.7E-04	lb/kgal	Engineering Estimate	0.28	0.02

* Relfects methane emissiosn in units of carbon dioxide equivalent (CO2e).

PROCESS DATA

Loading Rate:

25,000 bbl/hr 1,050 kgal/hr

Annual Unrestricted Throughput:

219,000,000 bbl/yr 9,198,000 kgal/yr

Limited Annual Throughput:

43,800,000 bbl/yr 1,839,600 kgal/yr

Water-borne vessel Vapor Composition

0.200% Sulfur (wt % of total VOC) - assumed to be all H2S

90% conversion of H2S to SO2

HAPs EMISSIONS FROM LOADOUT

Pollutant	Weight fraction in crude oil *	Potential To Emit Restricted Emissions **		
	w_i	lb/yr	tpy	lb/hr
n-hexane	0.4	195.00	0.10	0.02
Benzene	0.6	292.50	0.15	0.03
iso-octane {2,2,4 trimethylpentane}	0.1	48.75	0.02	0.01
toluene	1	487.49	0.24	0.06
ethylbenzene	0.4	195.00	0.10	0.02
xylenes *	1.4	682.49	0.34	0.08
cumene {isopropylbenzene}	0.1	48.75	0.02	0.01
1,2,4 trimethylbenzene	0.33	160.87	0.08	0.02
cyclohexane	0.7	341.25	0.17	0.04
Total HAP		**2452.09**	**1.23**	**0.28**

* From API's Manual of Petroleum Measurement Standards Chapter 19.4: Evaporative Loss Reference

** Assumes a capture efficiency of 98.7%.

Attachment G

Company	CPBR	Client #	Barge: Clatskanie, OR 0113-18
Analyst	MTH	Job #	
Parameters	EPA Method 18-type	# Samples	6 Canisters

Compound	Sample ID / Canister # / Sample Concentration (ppm)		
	Feed 1	***Feed 2***	***Feed 3***
	1341	***1042***	***1384***
Methane	4,996	4,895	6,947
Ethane	30,634	31,618	53,721
C2 as Ethane	0.601 ND	0.682 ND	0.592 ND
Propane	81,771	85,683	151,413
C3 as Propane	0.601 ND	0.682 ND	0.592 ND
Butane	31,904	33,653	57,591
C4 as Butane	11,755	12,363	20,612
Pentane	6,421	6,893	10,327
C5 as Pentane	5,244	5,676	8,488
Hexane	1,292	1,443	1,715
C6 as Hexane	3,075	3,379	4,412
Heptane	345	376	385
C7 as Heptane	2,585	2,969	3,049
Total VOCs as Propane	200,895	212,142	342,266
	Discharge 1	***Discharge 2***	***Discharge 3***
	1159	***1346***	***1016***
Methane	6,682	13,227	17,147
Ethane	41,818	54,065	72,899
C2 as Ethane	0.603 ND	0.748 ND	0.624 ND
Propane	58,084	30,562	28,706
C3 as Propane	0.603 ND	0.748 ND	0.624 ND
Butane	3,973	2,563	1,920
C4 as Butane	3,168	1,840	1,266
Pentane	50.8	27.0	24.3
C5 as Pentane	85.7	76.7	88.2
Hexane	4.13 J	2.13 J	1.89 J
C6 as Hexane	7.37 J	3.62 J	3.25 J
Heptane	0.603 ND	0.748 ND	0.624 ND
C7 as Heptane	2.88 J	1.01 J	2.24 J
Total VOCs as Propane	99,041	78,164	88,800

Attachment H

0 250 500 Feet

Future Tank

Existing Tank

Vapor Combustion Unit

Figure 1
Columbia Pacific Bio-Refinery
Terminal Operations Plot Plan
Clatskanie, OR

COLUMBIA PACIFIC BIO-REFINERY

Date: (10/21/2013) Source: Z:\ChemSA_DI\Consumers_Energy\Columbia_Pacific\bio_Refinery\ArcGIS\2013\10\Site_Update\CPBR_Figure_Update.mxd

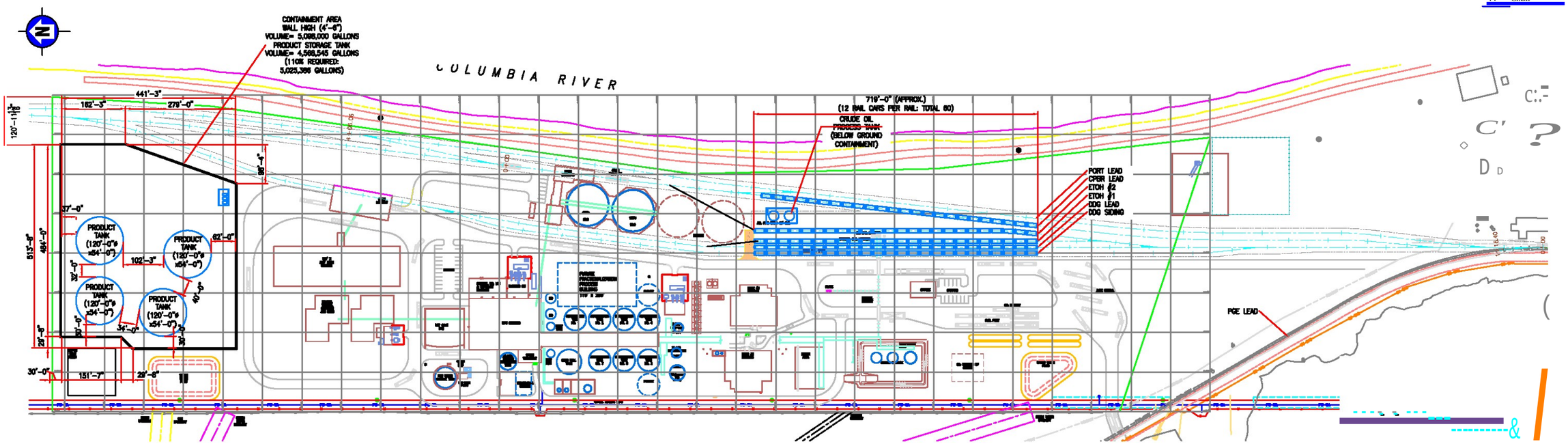

REV. No.	
Y M D	

NOT FOR CONSTRUCTION

INCREASE CAPACITY

PÖYRY

HI

SITE LAYOUT
TERMINAL OPERATIONS

		Y	M	D			Y	M	D
CHC. ENG.					DRWT.	D. CAIN	21	10	14
SUB. ENG.					DESIGN.	N. DI PIETRO	13	05	30
PROJ. ENG.	D. CAIN				CHECK.				

FRAME :	SCALE : 1" = 128'-0"
PROJECT CPBR-001	DRAWING No. 890 — 01 —9001
CONTRACT No.	CONTRACTOR No.
REV. C	

Attachment I

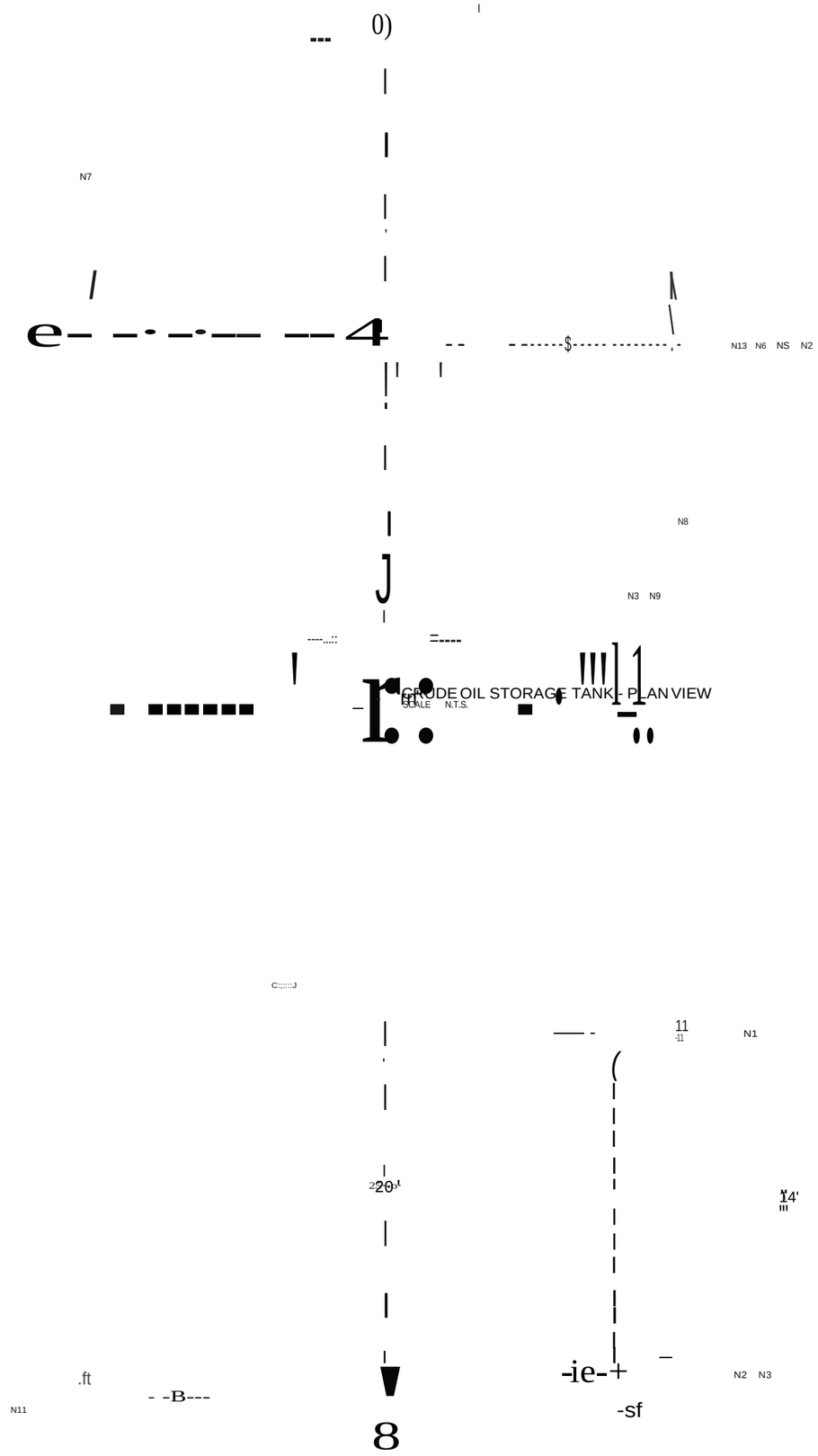

CRUDE OIL STORAGE TANK - PLAN VIEW
SCALE N.T.S.

GENERAL NOTES

1. THIS IS AN OJTUNE GUIDE DRAWING FOR SPECIFICATION PURPOSES OOLY, AND IS SUPERSEDED BY THE VENDOR'S FABRICATION DRAWINGS.
2. ALL INSERTS m BE INSTALLED TO ±Jmm (1/ n TOERANCE IN BOTH VERTICAL AND HORIZONAL PLANES FLANGES SHALL BE "TRUE AND SQUARE TO TANK CENTERLINES OR PLANT GRID LINES.
3. FLANGES ON VERTICAL N02ZLES (E.C. ROOF N022LES) TO BE INSTALLEDwm1 SOLT HOLES STRADDLING PLANT GRIDLINES, UNLESS N01EO On-!ERWISE
4. FLANGES ON Hef(I)ZDNTAL NOZZLES (E.G. SHELL NOZZLES) 10 BE INSTALLED WI"TH BOLT HOLES STRADDLING VERTICAL, UNLESS NOTED On1[RWIS[.
5. CLEAN ALL SURFACES OF PAINT, SCALE, WELD SPATTER. OXIOC. AND GREASE
6. WELDS TO EIE FULL AND CONTINUOUS UNLESS O"THERWISE NOTED.
7. FABRICATOO TO SEAL UNWELDED PORTIONS OF STITCH WEL[)]NG WIIH EPOXY PUTTY TO PREVENT CS CORROSIDN.
8. ALL INTERNAL WILDS TO BE GROUND SMOOTH AND BUFFED TO REMOVE COLOR.
9. SEE PLAN EW FOR PROPER NOZZLE ORIENTA"TION.
10. DRILLING TO CONFORM TO ANS-8 16.5 LATEST EDITION, WITH BOLT HOLES STRADDLING CENTERLINES UNLESS OTHERMSE NOTED.
11. FINAL ORIENTATION OF NOZZLES TO BE DETER INED AT VENDOR'S APPROVAL DRAWING STAGE.
12. PRODE CATHODIC PROTECTIC>< SYSTEM.
13. 10 ALLOW FULL DRAINAGE CF "TANK, LOW POINT NEAR OIJ"TLET SHALL BE PRDDED.

TANK /VESSEL SPECIFICATION

TANK NAE/EOUIP NO.	CRUDE m STORAGE TANK
CONTENTS NAME	CRUDE OI
CONTENTS SG	D.9
CONTENTS pH	7. 6
CONTENTS TENP	110"F
DE9GN CODE	API 6020
VOLUME – OPERATING	35 CIOD US !;AL
VOLUME – MAXIMUM	
OPERATING WEIGHT (LBS)	
TANK DESGN PRESSURE	15 psi
TANK DESIGN TEMPERA TURE	1"4-0"F
TANK LOCATION	OJTDOOR
A BIENT TEMPERATURE ATER IAL SPECIFICAMN	6-11D F CARBON STEEL
REINFORONG MATER1AL	
IN"TERNAL FINISH	MILL FINISH
VELD TREA"TM ENT	PER API 620
MIN WALL IHICKNESS CORROSIALLOWANC E	PER API 620 1/16"
II!:UCING	PER API 650
INSPECTION WNO LOAD	PER API 620
ROOC- LOAD	
SEISIIAIC LOAD	ZDNE 4
SURFACE PREP & PAINT	NEAR \M-iITE – 2 COAT EPOXY
NOZZLE PIPE SCHEDULE	PER API 650
BOLTING GASKET	
TESTING	H"IIIROSTATIC PER 620
INSULATION – ROOF	N/A
INSULATION – SHELL	N/A
AGHATOO WEIGHT (LBS)	N/A
AGI"TA TOO SUPPORT STEEL	N/A

NOZZLE SCHEDULE

NOZZLE NO.	SIZE [NPS/DN]	FLANGE	PRO.ECTIDN	DESCRIPTION	REMARKS
1	2.....	150#	9"	It.IANWAY	
2	24"	150#	9•	INLET	
3	4"	150N	8"	RECIRCULATION INLET	
4	12"	150#	8"	oun_n	
5	3/4"	30001		COUPLING TEMPERATJRE ELEMENT	
6	S"	1501	S"	LEVEL GAUGE	
7					
8					
9	20"	15D#		HATCH	
11	J"	15DI	FLUSH	LEVEL TRANSMITTER	
12	2<"	15D#	6"	FLOATING ROOF MANWAY	
15	12"	1501f		PSV	
		15DI	g"	VACUUM BREAKER	TO DRAINING SYSTEM
13	6"	1501	9"	GAUGE HATCH	
14					
16					
17					

A ICUENT

1E I1J D5 2J

LJ

NOT FDR CONSTRUCTION

GLDIAI. CIIIEHMIIUIIIhIIII'
POVAY

DATAIIHIE'
TMK
CRUDE OL
IIEQUIIIEDI

GENRERAL ARRANGEMENT
DRAWING

CI

CRUDE OIL STORAGE TANK - ELEVATION

SCALE NTS

N.T.S.

IR SOULARD

IR SOULARD

CPBR-001

900-01-9001

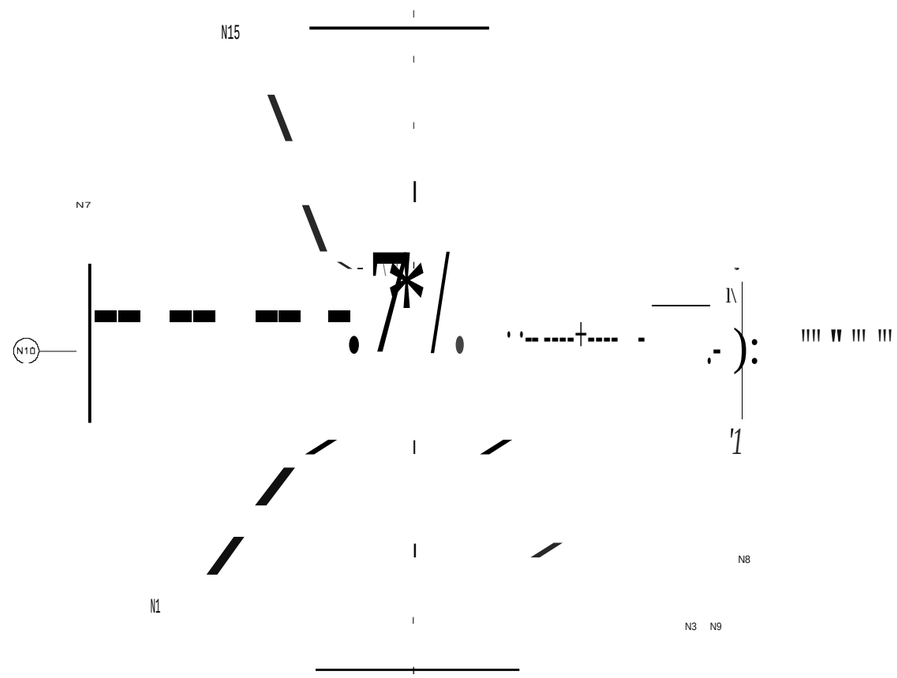

CRUDE OIL STORAGE TANK - PLAN VIEW

SCALE' N.T.S.

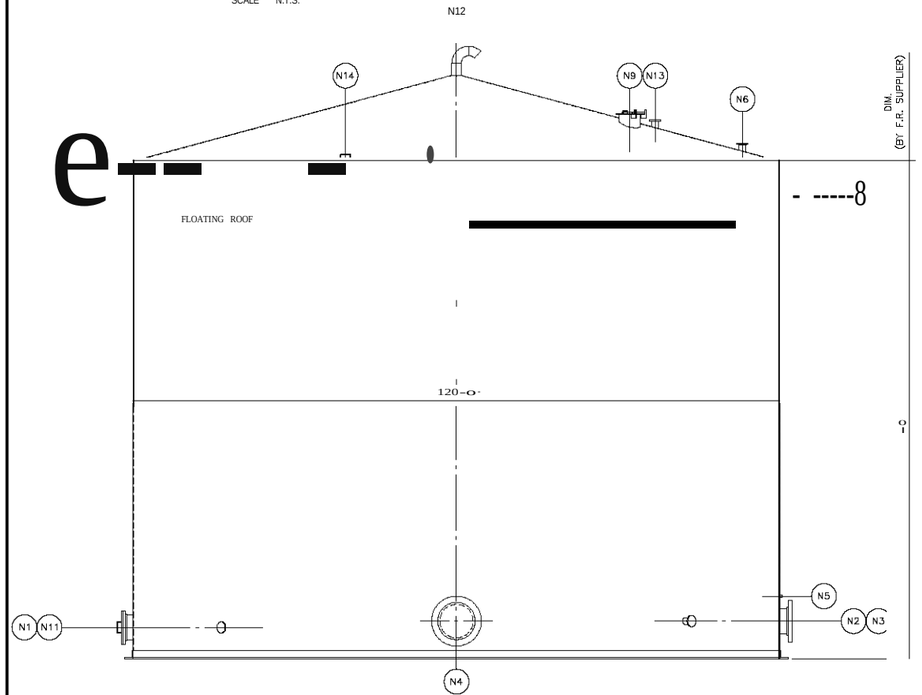

CRUDE OIL STORAGE TANK - ELEVATION

SCALE· NTS

GENERAL NOTES

1. THIS IS AN OJTUNE GUIDE DRAWING FOR SPECIFICATION PURPOSES OOLY, AND IS SUPERSEDED BY THE VENDOR'S FABRICATION DRAWINGS.
2. ALL INSERTS m BE INSTALLED TO ±Jmm (1/ n TQERANCE IN BOTH VERTICAL AND HORIZONAL PLANES FLANGES SHALL BE "TRUE AND SQUARE TO TANK CENTERLINES OR PLANT GRID LINES.
3. FLANGES ON VERTICAL N02ZLES (E.C. ROOF N022LES) TO BE INSTALLEDwm1 SOLT HOLES STRADDLING PLANT GRIDLINES, UNLESS N01EO On-:ERWISE
4. FLANGES ON Hef()ZDNTAL NOZZLES (E.G. SHELL NOZZLES) 10 BE INSTALLED WI'TH BOLT HOLES STRADDLING VERTICAL, UNLESS NOTED On1[RWIS[.
5. CLEAN ALL SURFACES OF PAINT, SCALE, WELD SPAHER. OXIOC. AND GREASE
6. WELDS TO EIE FULL AND CONTINUOUS UNLESS O"THERWISE NOTED.
7. FABRICATOO TO SEAL UNWELDED PORTIONS OF STITCH WfL[)]NG WIIH EPOXY PUTTY TO PREVENT CS CORROSIDN.
8. ALL INTERNAL W'LDS TO BE GROUND SMOOTH AND BUFFED TO REMOVE COLOR.
9. SEE PLAN EW FOR PROPER NOZZLE ORIENTA"TION.
10. DRILLING TO CONFORM TO ANS-8 16. LATEST EDITION, WITH BOLT HOLES STRADDLING CENTERLINES UNLESS GTHER'MSE NOTED.
11. FINAL ORIENTATION OF NOZZLES TO BE DETERMINED AT VENDOR'S APPROVAL DRAWING STAGE.
12. PRODE CATHODIC PROTECTIC>< SYSTEM.
13. 10 ALLOW FULL DRAINAGE Cf" "TANK, LOW POINT NEAR OIJ"TLET SHALL BE PRDDED.

TANK/VESSEL SPECIFICATION

TANK NAE/EOUIP NO.	CRUDE m STORAGE TANK
CONTENTS NAME	CRUDE OI
CONTENTS SG	D.9
][	]
CONTENTS TEN P	110"F
DE9GN CODE	API 600
VOLUME – OPERATINC	4 500 ODO US !;AL
VOLUME – MAXIMUM	
OPERATING WEIGHT (LBS)	
TANK DESGN PRESSURE	ATMOSPHERIC – FLDATIN G ROOF
TANK DESIGN TEMPERATURE	1"4-0'F
TANK LOCATION	OJTDOOR
ABIENT TEMPERATURE	6-110'F
ATERIAL SPECIFICAMN	CARBON STEEL
REINFORO NG MATER1AL	
IN"TERNAL FINISH	MILL FINISH
VELD TREA"TMENT	PER API 650
MIN WALL IHICKNESS	PER API 650
CORROSI ALLOWANCE	1/16"
III:UDING	PER API 650
INSPECTION	PER API 650
WNO LOAD	
~~ROOC~~ LOAD	
SEISMIC LOAD	ZDNE 4
SURFACE PREP & PAINT	NEAR \M-iITE – 2 COAT EPOXY
NOZZLE PIPE SCHEDULE	PER API 650
BOLTING	
GASKET	
TESTING	H'IIROSTATIC PER 65D
INSULATION – ROOF	N/A
INSULATION – SHELL	N/A
AGHATOO WEIGHT (LBS)	N/A
AGF'TATOO SUPPORT STEEL	N/A

NOZZLE SCHEDULE

NOZZLE NO.	SIZE [NPS/DN]	FLANGE	PRO.£CTIDN	DESCRIPTION	REMAR KS
1	2.....	150#	9"	ltLIANWAY	
2	24"	150#	9•	INLET	
3	4"	1so1		RECIRCULATION INLET	
4	.36"	150N		oun_n	
,	3/4"	30001	COUPLING	TEMPERATJRE ELEMENT	
S	S••	1501	S••	LEVEL GAUGE	
7	g x3ie·	1501	FAB	OVERFLOW/VENT	
B	g-x3ie"	15D#	FAB	OVERFLOW/VENT	
9	20"	15D#		HATCH	
10	4"	1SD#	6"	DRAIN	
11	••	15DI	FLUSH	LEVEL TRANSMITTER	
12	12·	15DI	••	ROCf" VENT	
13	6"	15DI	9"	GAUGE HATCH	
15	2.....	1501f	9"	ltLIANWAY	
16					
17					

2) DIFFUSER
.3) MANHCLE COVER MIXER
4) BAFFLES

A ICUENT

I1[113D5 21

DESCRIPTION OF REVISION | BY | APP.

LJ

GLDIAL CIJEIUIIIIUIIIhIIII'

POVAY

IIOO

DATAIIHIE'
TMK
CRUDE OL
(& IIEQUIIIEDI

N.T.S.

P:\Df-Greg\PROJECTS\GPBR-001\D-Mech\EquipData\900-01-9000.dwg/10/06/2013/Ros31

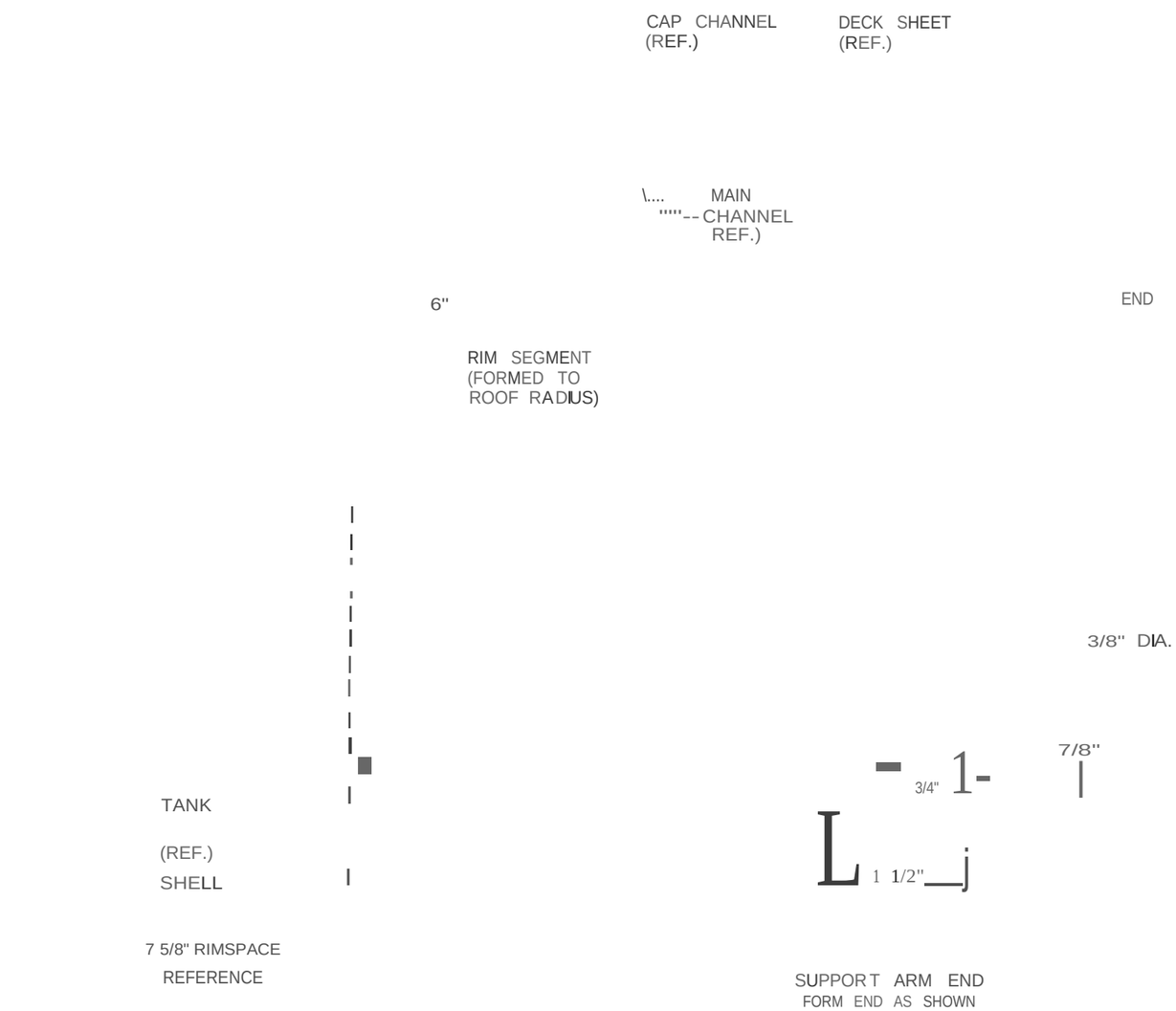

SHOE SEAL WI SECONDAR Y WIPER

FOR UNIDECK ROOF

LIST OF MATERIALS

PC. ARK	QTY.	DESCRIPTION	MATERIAL	PART NO.	WT.
1		SHOE, 18 GA. x 16" x 144"	S.S.	20825	32.00
2	2	SHOE CLIP 3 32" x 4 3 8" x 7 3 8"	ALU	22178	0.76
3	2	RIM CLIP WELDMENT, 3 32" x 7" x 22"	ALUM	43117	3.00
4	2	SUPPORT CHANNEL, 3 32" x 5" x 19"	ALUM	43118	1.70
5	2	SPRING BACKER PLATE,	ALUM	43056	0.44
6	2	PUSHER SPRING, 18 GA. x 3" x 36"	S.S.	43048	2.00
7	24	CHANNEL, RIM HOLDDOWN, 0.080" x 1 1/2" x 11 3/4"	ALUM	43040	2.40
8	16	CHANNEL, SHOE HOLDDOWN, 0.080" x 1 1/2" x 7 3/4"	ALUM	21503	2.08
9	1	SHOE LAP CHANNEL, LEFT, 0.080" x 1 1/2" x 9 1/8"	ALUM	21504	0.15
10		SHOE LAP CHANNEL, RIGHT, 0.080" x 1 5/8" x 9 1/8"	ALUM	21505	0.19
11		NEO SPONGE TAPE, 2" x 75'-0" ROLL	POLYETHYLENE	42509	
12	22	SOLT, CARRIAGE, 3 8" x 1"	300 SER. SS.	42274	0.20
13	22	NUT, HEX, 3/8"-16 UNC	ALUM	43070	0.11
14	22	FLAT WASHER, 3/8"	300 SER. S.S.	42067	0.05
15	4	CLEVIS PIN	300 SER. S.S.	21515	0.02
16	4	HAIR PIN	300 SER. S.S.	42187	0.01
17	10	BOLT, HEX TAP, 5 16"-18 x 1"	300 SER. S.S.	21154	0.14
18	106	NUT, HEX, 5/16 -18	ALUM	43127	0.05
19	68	FLAT WASHER, 5/16"	300 SER. S.S.	21048	0.03
20	48	BOLT, HEX TAP, 5 16"-18 x 1 1 2"	300 SER. S.S.	43124	0.14
21		PRIMARY FABRIC 10 MIL x 18"	PETROLAM	22110	1.82
22		TEFLON SPLICE KIT NOT SHOWN)		120532	
23	2	SUPPORT ANGLE, 3/32" x 1" x 1" x 48" CUT TO LENGTH IN FIELD	ALUM	43028	4.00
24		MOUNTING BRACKET, SECONDARY SEAL, 1/16" x 6" x 12" (ROLL TO RADIUS OF ROOF)	ALUM	43012	8.16
25		SPLICE PLATE. 1/16" X 5 1/2" x 6"	ALUM	43011	0.85
26	1	FABRIC SPLICE, 10 MIL x 6" x 12"	PETROLAM	22374	0.2
27	4	TEK SCREW, #14 x 3/4"	300 SER S.S.	43121	
28	12'	WIPER TIP, 12" WIDE	URETHANE	22050	20.77
29	5	TIE WRAP FOR WIPER SPLICE (NOT SHOWN)	PTFE	43048	0.02
30		INSERT TEE	ALUM	43049	0.05
31		1 NOT SHOWN)	CHANNEL BEAM, 56 3 4" ALUM	43035	2.70
32	2	FABRIC SUPPORT STRAP	HOPE	21037	0.20

LIST OF MATERIAL IS FOR ONE (1) 12'-0" SHOE
(33) SHOES REQUIRED

TOTAL WEIGHT = 84.24 LBS.

NOTES:

1. THE SHOE IS DESIGNED TO PERMIT ±4" OF RIM SPACE DEVIATION.
2. CUT SUPPORT ARM TO LENGTH, NOTCH, DRILL AND FORM IN THE FIELD

REVISION DWN CHKR

Thi• drot11ing ond InformaUon conto-ned on thl1 droNing ore the property of HMT ond ore funy protected by current U.S. ond Foreign potents ond/or Potent Applicotlons. This drawing is lo be used only h connection with \he performonce of woO< wori< by HMT. Reproductionh whole In of or OOJlhorizollon of or port for on)' other purpose is eKpressly forbidden.

RECIO. J08 NO.	12233432	ORA\\ BY	JBL	CHECKED BY	BOB
ENG. JOB HO.	041457	CATE riru:	12 19 2011	DATE	12/20/2011
TANK NO.					

3. U

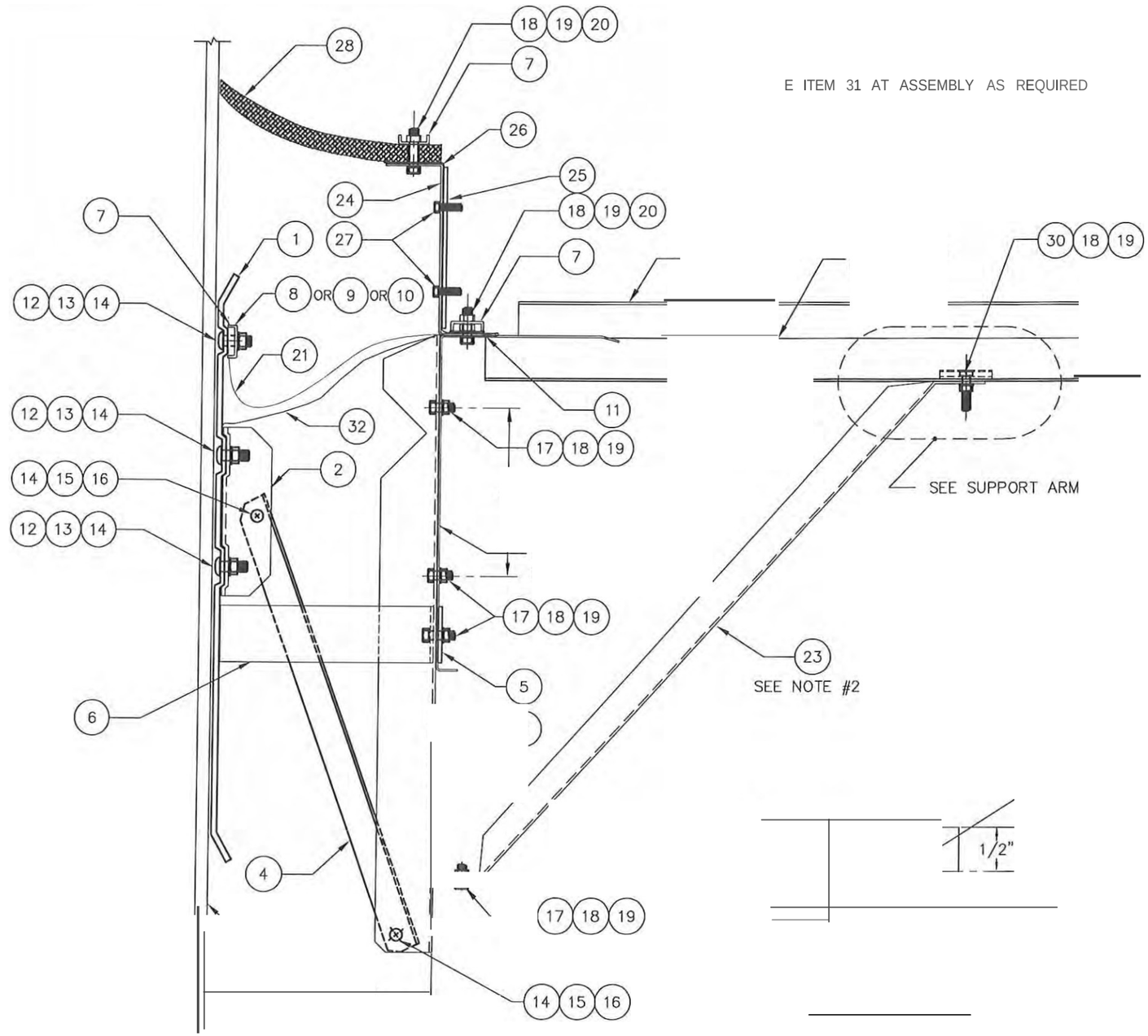

TANK SIZE			
1fo'-o" DIA. x 48'-o" TALL	SHOE SEAL W/ SUPPORT ANGLE & SECONDARY WPER		
OK	CUSTOMER	DRAWING NO.	REV.
	GLOBAL COMPANIES	041457-315	0

REFERENCE DWG: R00277

Attachment J

Vapor Recovery / Combustion Control Units
Engineering, Field Services,
and Parts

PROPOSAL

PREPARED FOR

COLUMBIA PACIFIC BIO-REFINERY

JORDAN TECHNOLOGIES MARINE VAPOR COMBUSTON SYSTEM USING LOW NOX CO TECHNOLOGY

FOR

Clatskanie Barge Dock Facility

PROPOSED BY

JORDAN TECHNOLOGIES, INC.
2820 South English Station Rd.
Louisville, KY 40299
Telephone 502-267-8344
Fax 502-267-8379

Date: April 4, 2013

Quote Number: 12-5536

Please note that the maximum thermal capacity of each CEB 1200 is 12 Megawatts or 40.9 MMBTU/hr. With this in mind, the maximum thermal capacity of a CEB 4800, which is made up of four CEB 1200 units is 48 Megawatts or 163.6 MMBTU/hr.

The following table shows the waste gas composition for the minimum case as well as Feed 1 and Feed 3, which were used for our sizing calculations. If the actual composition of your waste gas is significantly different than this, please let me know and we can revise our calculations.

Average waste gas composition:

Gas	**Minimum Case (% by volume)**	**Feed 1 (% by volume)**	**Feed 3 (% by volume)**
Methane	0	0.50	0.69
Ethane	0	3.06	5.37
Propane	0	8.18	15.14
Butane	0	3.19	5.76
Pentane	0	0.64	1.03
Hexane	0	0.13	0.17
Heptane	0	0.03	0.04
Air	100%	84.26	71.79
Total:		**100%**	**100%**

You also provided us with the anticipated fill rate of the barge, which you indicated would be 25,000 bph. We have added a 5% safety margin to this, which increased the fill rate to 26,250 bph. This is summarized in the following table. This data was also used to size the CEB® for this requirement:

Waste gas flow rates:

Input data		Min. Case	Feed 1	Feed 2
Max Fill rate:	Bph	26,250	26,250	26,250
Min Fill rate	Bph		2034	1134
Fill rate:	scfm	2,457	2,457	2,457
Fill rate	MMSCD	3.54	3.54	3.54
Gas Temp	°F	40	75	110
Inlet Pressure	Inches W.C.	40	60	80

In order to determine the proper size of the CEB® we used the minimum and maximum flow conditions from the above table in our sizing program. The following table shows the results of these calculations:

Waste gas data evaluation:

	Units	Minimum Case	Feed 1	Feed 3
Process gas flow	scfm	2,457	2,457	2,457
Calculated GHV	BTU/scf	0	437	784
Total capacity:	MMBTU/hr.	20.0	64.5	115.7
Total support gas usage (assuming propane):	scfm	123	0	0

Results of sizing calculation:

Based on the results of our sizing calculations, during normal operations, the thermal output of the system will range from 64.5 to 115.7 MMBTU/hr. We would normally recommend a CEB® 3600 for this application, which is made up of three CEB 1200s and has a thermal capacity of 4 to 122.7 MMBTU/hr.

Having said this, you've requested that we add one additional unit so you have an inline spare. With this in mind, we would recommend our CEB 4800, which is made up of four CEB 1200s and has a thermal capacity of 4 to 163.6 MMBTU/hr.

PLEASE NOTE: During the initial phase of the filling operation when the waste gas stream contains only air, the system will require a minimum of 123 scfm or 7,380 scfh of propane to operate. As the vapor concentration increases the temperature in the exhaust stacks will increase and the system will automatically shut the support gas flow control valve.

BASIS FOR DESIGN

The Jordan Technologies CEB is designed and based on the following terminal loading characteristics, product characteristics, and other design data as furnished by the customer. The basis for design follows:

CHARACTERISTICS OF THE PRODUCT LOADED:

Product Loaded (Marine)----------Crude

Design Vapor Concentration ----------40% VOC

Design Flow Rate ----------25000 bbl/h

UTILITY REQUIREMENTS:

Electrical Requirements ----------480 Volt/ 3 Phase/ 60 Hz
----------120 Volt/ 1 Phase/ 60 Hz

Electrical Area Classification for the VCU ----------Non-Classified

Pilot Gas ----------Min. 30 psi supply to skid

AMBIENT CONDITIONS:

Summer ----------100° F max
Winter ----------0° F min
Site Elevation----------150' above mean sea level
Design Wind Load----------150 mph
Earthquake Design----------Zone 4

REQUIRED INLET PRESSURE

At maximum design flow rate ----------40" WC

PROCESS DESCRIPTION

How the Jordan Technologies CEB® works:

- 100% of the combustion air is provided by a combustion air fan that is driven by a variable frequency drive
- The waste gas from your process enters the CEB through the waste gas injector where it will flow past static mixers. This is also where the support gas will enter the system, if needed. This causes the waste gas (and fuel) to flow turbulently across the air stream to start the mixing process
- The waste gas and air mixture is allowed to propagate up the diffuser and into the head of the burner. The head of the burner is covered with Bekaert Corporation's proprietary Bekinit® burner cloth.
- The Bekinit is made up of fibers of FeCr alloy that are knitted together like a wool sweater. This generates a material with millions of tortured paths for the gases to pass through. This is the final and most critical phase of the mixing process, just prior to combustion
- See the graphic below for more details:

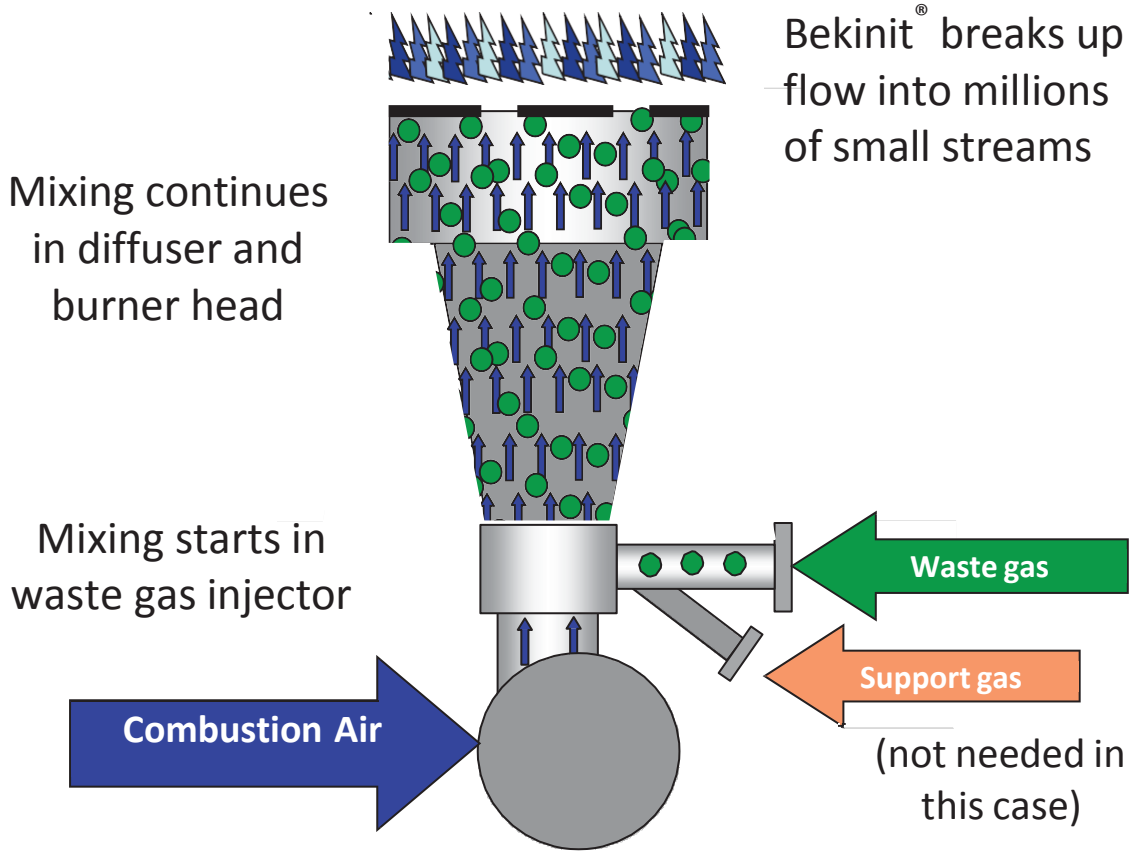

The CEB® 1200 has some unique features that make it ideal for your application:

- Ultra low emissions - the CEB's premix, surface combustion technology, which utilizes Bekaert Corporations proprietary Bekinit® burner cloth, ensures that the CEB will achieve:
    - DRE of up to 99.95%
    - NOx emissions of ≤15 ppmv at 3% oxygen (≤ 0.023 lbs. NOx/MMBTU)
    - CO emissions of ≤10 ppmv at 3% oxygen (≤ 0.01 lbs. CO/MMBTU).

- Smokeless operation – the premix surface combustion process of the CEB 1200 utilizes a dedicated combustion air fan to supply 100% of the combustion air requirements. This, in conjunction with the static mixer inside the burner, ensures that waste gas and combustion air streams form a homogeneous mixture before reaching the head of the burner. The mixture is then combusted evenly over the entire surface area of the head of the burner. This prevents the cracking of heavy hydrocarbons, which forms soot particles. It is the un-combusted soot particles that form the black smoke that can be seen with other flaring technologies.
- No visible flame – because of the superior mixing of the waste gas and combustion air, the combustion reaction is extremely efficient generating a blue flame that is less than 24" long.
- SCAQD approved solution – There are currently seven units in operation within the SCAQMD, with five more to be installed later this year.
- **Flare Industries now has its first unit permitted in the SJV APCD.**
- There are also CEB® units in operation in Ventura County Air Pollution Control District and one in Santa Barbara Air Pollution Control District.
- With over 60 CEB's installed globally, the CEB is the most widely used ultra-low emission flare in the world.

Our understanding of your process:
It is our understanding that the CEB®s will be burning vapors from crude oil marine loading operations. The gas flow is relatively stable and will be free of liquids and solids. Once the system is started it will run continuously.

Since each individual CEB 1200 burner is a completely independent unit, the operation of the entire system can be staged. This would allow you to start-up and operate just the number of units needed to meet your requirement at any given time.

Individual CEB 1200 burners may be added as needed. With this in mind, you can stage your investment in the control devices as needed.

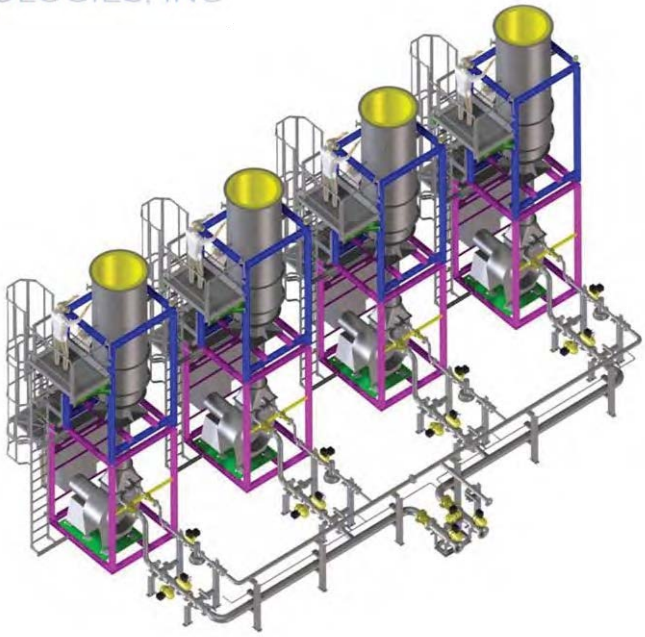

Flare Industries' scope of supply:

The following defines Jordan Technologies scope of supply, which includes:

- Each CEB 1200 will include the following:
  - One integrated combustion air fan with variable frequency drive, which will provide 100% of the combustion air for the combustion process. The blower motor will be rated for Class 1/Division 1 service. And there will be an air filter on the air intake of the fan.
  - Waste gas connection – 6" nominal ANSI 150 Lbs. flange
  - One waste gas injector – which injects the waste gas into the combustion air stream
  - One diffuser – which allows the mixing to propagate as the gases flow to the head of the burner
  - One premix chamber – this is the head of the burner and is cover with Bekaert's proprietary Bekinit® burner cloth, which provides the final mixing of the waste gas and combustion air
  - One Type-K thermocouple – used to monitor the temperature of the premix chamber
  - One pilot burner with its own dedicated pilot gas flow control train. Components in the flow control train will be rated for Class 1/Division 1 service.
  - One standard Insulated exhaust stack with two emission testing ports 2.5 times the internal diameter of the stack downstream of the last disturbance and 0.5 times upstream of the exhaust. The system will include a manually operated hydraulic lifting mechanism that will allow the stack to be lifted off the burner in order to provide access to the burner for maintenance.
  - One Type-S thermocouple – used to measure exhaust gas temperature
  - One caged ladder and two work platforms. The lower platform will allow access to the main burner, pilot burner and stack thermocouple. The upper platform will allow access to the emission testing ports.

- Process control panel will include an Allen-Bradley CompactLogix PLC. Control panel will be manufactured in Jordan Technologies UL Certified shop and will be UL Certified. Panel will include AC unit to keep components cool during summer operations. Panel will be rated for Class 1/Division 1 service.
- A nominal 6" waste gas flow control train, which will include the following items:
    - One 6" nominal manual isolation valve
    - One 6" nominal electric driven emergency shutdown (ESD) valve
    - One 6" nominal electric driven flow control valve
    - One 6" Enardo USCG approved detonation arrestor
    - One pressure gauge with separating ball valve.
- Includes wind and seismic calculations
- Standard 12 month warranty

- One (1) Liquid knock out and pressure reduction station sized for 2.5 MMSCFD and consisting of:
    - One knockout vessel with high and low liquid level switches and manual drain valve, ASME Code Stamped, carbon steel construction.
    - One nominal 6" pressure regulating valve
    - One pressure relief valve
    - Includes butterfly isolation valves with carbon steel bodies and stainless steel trim.
    - Inlet and outlet pressure gauges with stainless steel instrument isolation valves
    - All piping to be 304 stainless steel
    - The above components will be installed on a skid

The following items are ***NOT INCLUDED*** in Jordan Technologies scope of supply:

1. Shipping to the site
    a. Quotation is based on shipping terms of Ex-Works our facility in Austin, Texas and Louisville, KY per INCOTERMS 2010.

2. Offloading equipment at the site.

3. Installation of equipment at the site including all necessary foundations, piping, field wiring, power supply, compressed air supply (or nitrogen) and all necessary mechanical and electrical tie-ins between the customers facility and the CEB®. This includes the main header to the liquid knock out and pressure reduction station and from the liquid knock out and pressure reduction station to the CEBs.

Control Panel

One (1) Jordan Technologies control panel consisting of the following:

- A NEMA 4 enclosure.
  - Annunciated first out indication with the following features:
    1. Power on
    2. Pilot flame proven
    3. Pilot flame failure
    4. Emergency shutdown
    5. High temperature on the detonation arrestor
    6. Assist-air blower failure
    7. Reset alarm
    8. The proposed VCU is optionally designed to be a temperature management system with a panel-mounted temperature-indicating controller (TIC). Stack mounted thermocouples will provide input on temperatures within the stack.
  - Allen Bradley programmable logic controller (PLC) is complete with power supply, the required input and output modules, and man-machine interface (MMI).
- Assist-air motor starter and disconnect.
  - Control panel enclosure heater to prevent moisture accumulation.

Other Items

The system includes additional control items as follows:

- Pilot gas pressure regulator
- Pilot gas auto-block solenoid valve (fail close)
- Assist gas automatic control valve
- Pressure transmitter for burner staging.
- Pilot ignition transformer and flame scanner.
- Manual air vanes for air assist blower.
- Other hand valves, pressure gages, strainers, etc.

Electrical Fabrication

Electrical fabrication is done in accordance with the National Electric Code (NEC). If this is not acceptable or local codes required other or additional compliance, please notify Jordan Technologies.

Standard Paint Specification

Exterior carbon steel surface preparation and prime coat will be in accordance with Jordan Standard Specification.

Finish coat can be provided upon request at additional cost.

Stainless steel surfaces will not be painted.

Piping and Welding Standards

Piping shall be fabricated per ANSI B31.3, category D (no radiograph or testing). All pipe 1½" and smaller to be Sch. 80 A-106-B seamless. All pipe 2" and larger to be Sch. 40 A106-B seamless.

All structural steel including the stack and skid will be welded to conform to AWS D1.1

All plate and structural material to SA-36 or SA-5l6-70.

All stud bolts to be A-193-B7 with A-194-2H nuts (zinc plated).

Where applicable, the gaskets will be 1/16" thick Garlock 3400 or equal.

Packaging, Shop Test

All of the equipment will be packaged to the greatest practical extent including piping, electrical wiring, conduit, paint, and other miscellaneous materials requiring only minor field assembly. A shop operational test of the packaged system will be performed to test controls and safety devices. No hydrocarbon vapor will be introduced into the system for burning other than pilot gas to confirm the pilot's operation.

Vapor Inlet Pipe

Inlet Pipe Size	10 Inch

PART V

PERFORMANCE GUARANTEE

The Jordan Technologies Vapor Combustion Unit will effectively oxidize the hydrocarbon vapors from the air/hydrocarbon vapor mixture piped to it in compliance with the guaranteed emission limit stated below.

Jordan Technologies guarantees the hydrocarbon emissions from the proposed Vapor Combustion Unit not to exceed DRE of up to 99.9%, NOx emissions of ≤15 ppmv at 3% oxygen (≤ 0.023 lbs. NOx/MMBTU), CO emissions of ≤10 ppmv at 3% oxygen (≤ 0.01 lbs. CO/MMBTU). per liter of product loaded based on the following:

1. The system is maintained and operated per the manufacturer's operating and maintenance instructions.
2. The loading does not exceed the conditions as defined in Part II, "Basis for Design" of this proposal.
3. Hydrocarbons in the vapor are those hydrocarbons typically found in crude oil vapors when crude fuels are transferred and exclude methane and ethane.
4. Determination of compliance with this Guarantee, test procedures, calculation methods, etc. will be per the appropriate and generally accepted sampling and analyzing techniques per requirements of the U.S. EPA for bulk crude loading terminals (40 CFR 60, Subpart XX). Emissions are to be averaged over a 1-hour test period.
5. Emissions from other sources such as the vapor collection system piping, storage tanks, product loading operations, etc. are outside of the scope of this Guarantee and the owner/ operator bear total responsibility for these emissions.

DOCK SAFETY SKID ASSEMBLIES

Dock Safety Skid

The Dock Safety Equipment is electrically classed at Class I, Group C & D, Division II. The equipment will be skidded for installation. Dock Safety Skid consists of a 10” Enardo Detonation Arrestor this model is USCGA certified, one 10” basket strainer, one 10” filter assembly with cartridge, one 10” Fail close pressure control valve. DSS is sized assuming a maximum pressure of 1 psi allowable on the barge. DSS will control barge pressure at .8 psi or less. Pressure indicating transmitters will be placed around both the filter assembly and detonation arrestor. A vacuum safety valve is also included. See attached P&ID for further clarifications. Control Panel and Dock Skid Calibration Panel is included. All equipment including warning lights and beacons required to meet USCG certification is included. Certification of system per USCG regulation is not included in the scope of Jordan Technologies Inc and is the responsibility of customer to subcontract a third party certifying entity.

Blower Skid

The vapor blower skid (1 required) with two blowers each capable of moving 75% of the maximum flow is designed to move the vapors from the common vapor header connected to the dock safety skids. It will come with a VFD to control the speed of the blower to maintain a negative suction pressure on the vapor header and all components shown on the Blower PID submitted with this proposal. All components will be skid mounted, assembled and devices wired to junction boxes. The control of this skid will be done using the CEB PLC control system. All associated electrical hardware for the blower skid will be housed in the CEB control panel. Final sizing and selection of the blower is subject to change based on final vapor header design and total system pressure drop. Blowers selected meet all USCG non-sparking requirements. Sizing is based on USCG additional 25% safety margin.

Blower currently sized to:
2683 SCFM, -80" WG IN, 80" WG OUT
14.7 PSIA, 68 DEG F, 50% RH, 45 MW GAS VAPORS

Note: price is subject to change based on final vapor hydraulics

BILL OF MATERIALS				
ITEM	QTY	DESCRIPTION	SPEC	HEAT NO.
1	1	CEB 1200	CS/SST	
2	1	PLATFORM #1	A-36	
3	1	PLATFORM #2	A-36	
4	1	CAGED LADDER ASSEMBLY	A-36	
5	1	HYDRAULIC LIFT SYSTEM		
6	1	WASTE GAS CONNECTION SPOOL	304L	
7	3	HEX BOLT, 1/2" x 1 3/4" LG c/w (2)FW, (1)LW, (1)HH NUT EACH	A- 5/A-194-2H	
8	16	HEX BOLT, 3/34" x 2 1/2" LG c/w (2)FW, (1)LW, (1)HH NUT EACH	A-325/A-194-2H	
9	2	HEX BOLT, 3/8" x 1 1/4" LG c/w (2)FW, (1)LW, (1)HH NUT EACH	A-325/A-194-2H	

NOZZLE SCHEDULE					
ITEM	TYPE	SERVICE	SIZE	RATING	SPEC
TP01	RFWN	WASTE GAS	6"	150#	304L SS
TP02	NPT	PILOT GAS	1"	N/A	304L SS
TP03	RFWN	TEST PORT	4"	150#	304L SS
TP04	RFWN	TEST PORT	4"	150#	304L SS
TP05	RFWN	SUPPORT GAS	2"	150#	304L SS

NOTES: ***UNLESS OTHERWISE SPECIFIED,***

1. *ALL BOLT HOLES SHALL STRADDLE COMMON CENTERLINES.*
2. *SEE PLAN VIEW FOR TRUE ORIENTATIONS.*
3. *PAINT SPECIFICATIONS DO NOT APPLY TO STAINLESS STEEL MATERIALS.*
4. *ALL NOZZLES AND COUPLINGS TO BE CAPPED OR PLUGGED PRIOR TO SHIPPING.*
5. *PAINTED SURFACES PER FLARE INDUSTRIES STANDARDS.*
6. *LADDERS & PLATFORMS PER CAL-OSHA*
7. *QUANTITY IN BILL OF MATERIAL FOR (1) UNIT, (4) REQUIRED.*

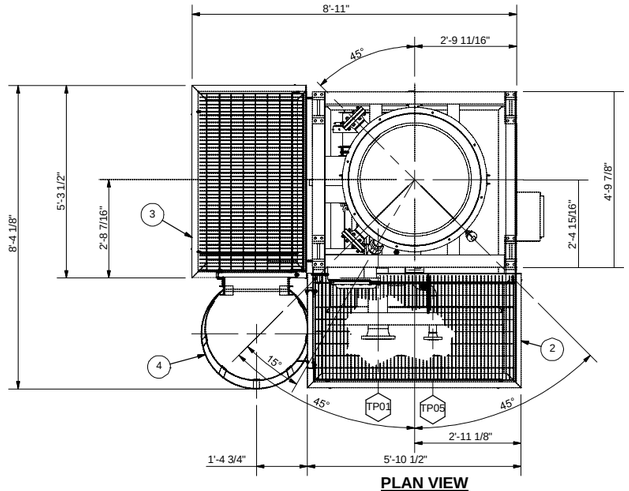

PLAN VIEW

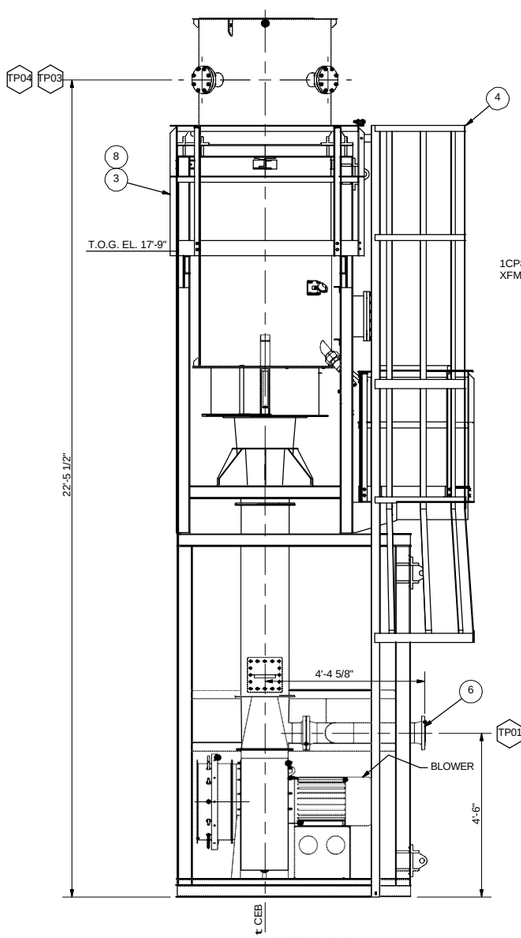

VIEW A-A

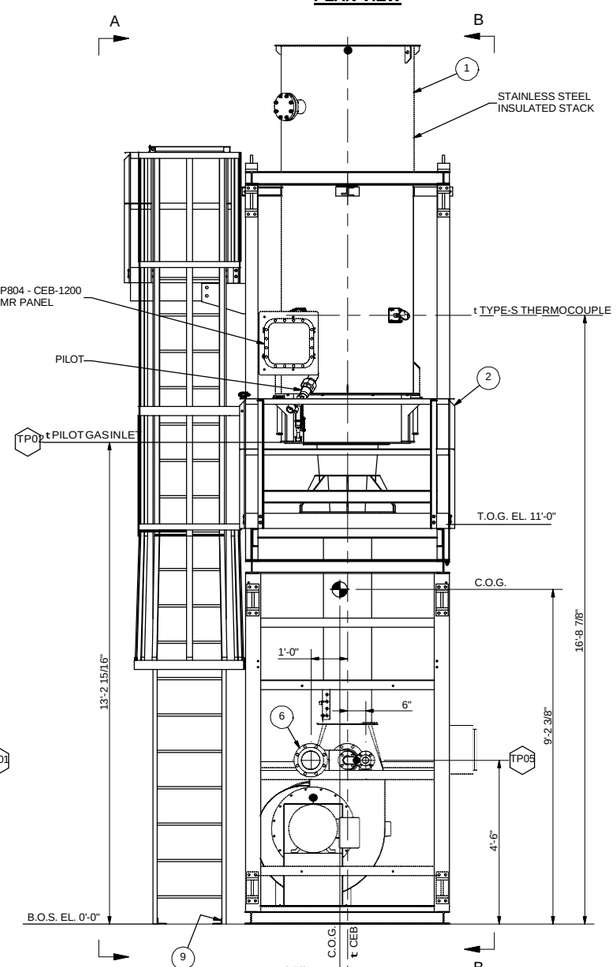

ELEVATION VIEW

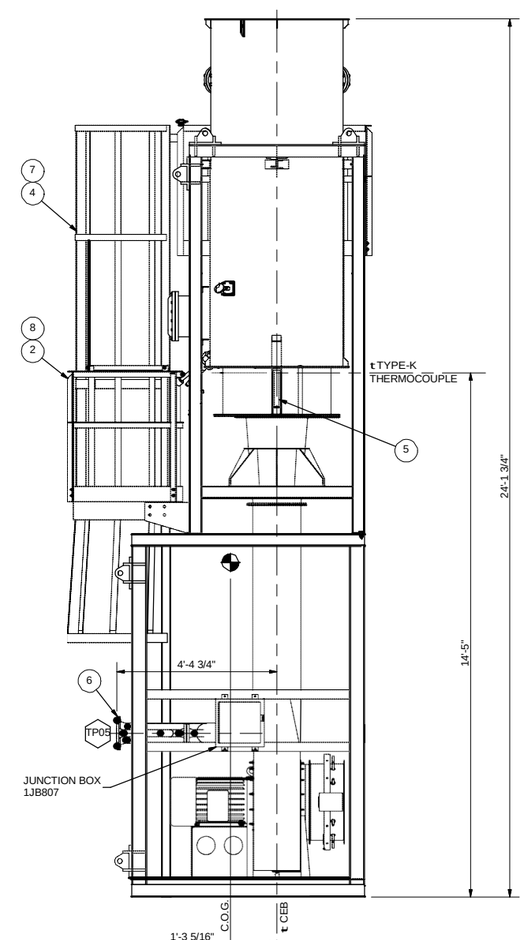

VIEW B-B

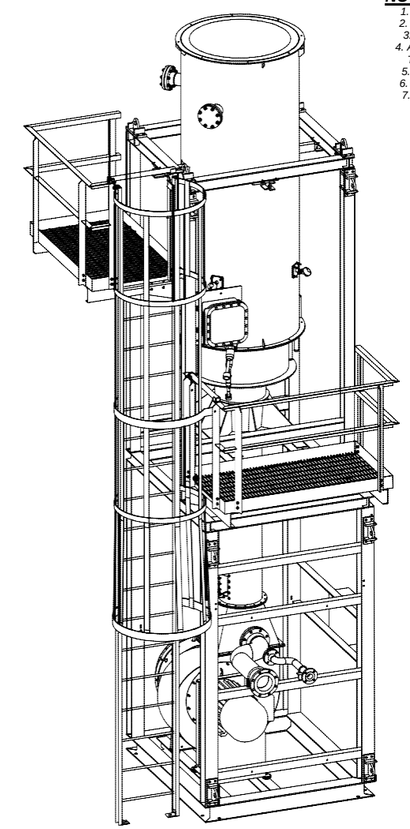

ISOMETRIC VIEW

REV	DATE	DESCRIPTION	BY	CHK'D	APPR
A	9/25/13	ISSUED FOR APPROVAL	DMR	TAE	GT

REVISION HISTORY

UNLESS OTHERWISE SPECIFIED ALL DIMENSIONS ARE IN INCHES. DO NOT SCALE DRAWING

TOLERANCE	
OVERALL ELEVATION	±1"
ROOF ELEVATION	±1/2"
GUYWIRE ELEVATION	±1"
FRACTIONS	±1/8"
DECIMALS .XX	±.06
DECIMALS .XXX	±.030
ANGLE	±1°
SQUARENESS	
ACROSS FACE	±1/16"
FLANGE ROTATION	±1/16" MAX.

THIRD ANGLE PROJECTION

PROPRIETARY INFORMATION

THIS DOCUMENT CONTAINS FLARE INDUSTRIES, LLC PROPRIETARY AND CONFIDENTIAL INFORMATION.

THE PROPERTY OF FLARE INDUSTRIES, LLC. IT MAY NOT BE REPRODUCED IN WHOLE OR IN PART WITHOUT THE PRIOR WRITTEN CONSENT OF FLARE INDUSTRIES, LLC. THIS DOCUMENT IS TO BE RETURNED UPON REQUEST AND IN ALL EVENTS WITH COMPLETION OF THE USE FOR WHICH IT WAS LOANED.

QTY REQD: 4

APPROX WEIGHT/LBS: 8300 lbs

CUSTOMER/LOCATION

COLUMBIA PACIFIC BIO REFINERY

CLATSKANIE BARGE DOCK FACILITY

TITLE

CEB-1200

GENERAL ARRANGEMENT

FLARE INDUSTRIES — INNOVATIVE COMBUSTION SOLUTIONS

SCALE

PROJECT NO. 13-0035

SHEET 1 OF 1

DWG NO. *130035-A-G02*

REV LEVEL A