I N T E R O F F I C E M E M O

TECHNICAL SERVICES
Bridge Engineering Section
Office Phone: (503) 986-4200
Fax Number: (503) 986-3407

DATE: April 20, 2014

TO: Craig Shike
Bridge Standards Managing Engineer

FROM: Scott Liesinger
Bridge Design Managing Engineer
ODOT
Phone#: 503-986-4324

SUBJECT: Proposed Revision to Bridge Design & Drafting Manual

RE: BDDM Section 1.9.1 – Deck Design & Detailing

Problem Statement:

This proposal changes the ODOT preferred deck orientation from longitudinal bars on top to transverse bars on top. ODOT had previously experimented with using longitudinal bars on top as a way to control shrinkage cracking. ODOT is now emphasizing other methods for controlling shrinkage cracking and therefore now prefers deck rebar be placed with the primary moment bars in their most efficient orientation.

Proposal:

Modify Section 1.9.1 as follows

1.9.1 Design and Detailing

Design

Design decks according to AASHTO *LRFD Bridge Design Specifications.*

Do not use the empirical design method for deck reinforcing steel. Excessive deck cracking, apparently due to under reinforcement, precludes the use of this method until further notice.

For additional deck requirements on Precast Prestressed elements, see *BDDM 1.5.6.1.*

For cast-in-place decks, discount 1/2 inch deck thickness when calculating composite properties for girder/slab systems. For a typical 8 inch deck, 7-1/2 inch would be considered structural and 1/2 inch would be considered a sacrificial wearing surface and included as non-composite dead load.

The preferred orientation of the top mat of deck steel will have the ~~longitudinal~~ transverse bars on top. ~~This orientation places the longitudinal bars closer to the surface and thereby helps reduce the size of deck shrinkage cracks. For the rare case when the primary concrete shrinkage is in the transverse direction, place the top longitudinal bars below the top transverse bars. Transverse on top orientation is also acceptable if necessary to meet deck overhang loading.~~

For skewed decks, orient transverse bars according to *LRFD 9.7.1.3*. In skewed box girders, orient bottom slab transverse bars the same as the deck transverse bars. See *BDDM 1.5.7.8* for additional bottom slab requirements. Note the intended bar placement on the bridge contract plans.

Do not use deck reinforcement larger than a #6 bar, except when needed to resist negative moment for continuous-span girders. When the top mat has longitudinal bars on top, any longitudinal reinforcement larger than a #6 bar will need to be placed in the bottom mat.

Unless a project specific deck reinforcement design is developed, use the "Concrete Deck Reinforcement (LRFD Design)", *Figure 1.9.1A, or 1.9.1B, ~~1.9.1C or 1.9.1D,~~* for design and detailing. ~~Separate figures are provided for longitudinal on top and transverse on top mat orientations.~~

Ensure project specific deck design conforms to the following minimum requirements:

- Section 4.6.2.1 in the AASHTO LRFD Bridge Design Specifications
- Concrete Class: HPC4000 – 1-1/2, 1 or 3/4 (except box girder decks that require greater strength)
- Reinforcement: Grade 60
- Reinforcement no larger than #6 bar
- Reinforcement spacing ≥ 5 inches and ≤ 8 inches
- Surface wear allowance = 1/2 inch
- Limit top of concrete compressive service stress due to positive moment in the deck (between girders) to 1650 psi.

Note that *LRFD 5.7.3.4* (Control of Cracking by Distribution of Reinforcement) is applicable for negative moment steel for bridges made continuous for live load, but is not applicable to bridge deck slab reinforcement. The 8 inch maximum bar spacing is adequate to control cracking in bridge decks.

Submit a design deviation request to the State Bridge Engineer for any concrete bridge deck designs not meeting any one of the minimum requirements in *Figures 1.9.1A, or 1.9.1B~~, 1.9.1C or 1.9.1D~~*. With the request, include the following:

- Design loading assumptions (dead, live, and future wearing surface)
- Documentation of which minimum requirements were met and which were ~~exceeded~~not met
- Orientation of the top mat (longitudinal on top or transverse on top)
- Deck thickness
- Maximum service stress in the top of the deck due to positive moment in the deck (between girders)
- Maximum service stress in the bottom of the deck due to negative moment in the deck (over a girder)

Use cast-in-place HPC concrete for all decks. Full-depth precast deck panels may be considered on a case by case basis. An exception letter from the State Bridge Engineer will be required before full-depth precast deck panels can be used. Partial-depth precast deck panels will not be permitted.

CONCRETE DECK REINFORCEMENT (LRFD DESIGN) with LONGITUDINAL BARS ON TOP
Steel Girders & Cast-in-Place Concrete box Girders - Simple Spans

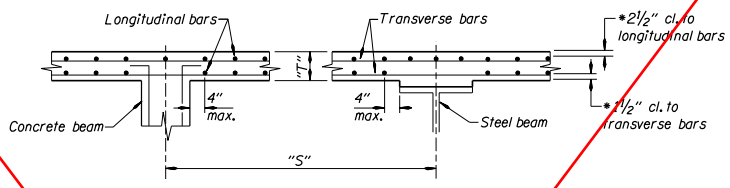

Delete chart

Assumptions

Specifications: AASHTO (Section 4.6.2.1)

Concrete Class: HPC 4000

Reinforcement: Grade 60

Top Mat Orientation: Longitudinal bars on top

Dead Load: 150 pcf + 50 psf future wearing surface

Deck DL moments: Negative -0.10wS^2
Positive +0.08wS^2

Live Load: Table A4-1 using 6" from ℄ of girder to the negative moment design section

*Design Moment: 1.25*DL + 1.5*DW +1.75*LL (Impact included in Table A4-1 live loads)*

Surface wear: ½" allowance for surface wear subtracted from positive moment "d"

Steel Girders: Top flange width not less than 24". Project specific design is required when top flange is less than 24".

Concrete Box Girders: Girder stem width not less than 12". For girder stem greater than or equal to 16", use Deck Design Chart for Precast P/S Concrete Members

> *Note:*
> *Additional reinforcement to accomodate rail loads at deck overhangs is not included in these details. The designer is responsible for design of overhangs.*

Note:
"S" is measured parallel to the transverse bars. Bar spacing is measured perpendicular to the bars.

Place bottom mat bars directly below and in line with a top mat bar. At expansion and construction joints, however, it is not neccessary for all bottom mat bars to be directly below a top mat bar.

** For coastal locations, specify 2" clear top and bottom. See also Section 1.1.25.3 for additional corrosion protection recommendations.*

Steel Girders & CIP Concrete Box Girders

Girder Spacing	Deck Thickness	Transverse Bars	Longitudinal Bars
5'-0"	8"	#4 @ 6½"	#4 @ 8"
5'-3"	8"	#4 @ 6½"	#4 @ 8"
5'-6"	8"	#4 @ 6½"	#4 @ 8"
5'-9"	8"	#4 @ 6½"	#4 @ 8"
6'-0"	8"	#4 @ 6½"	#4 @ 8"
6'-3"	8"	#4 @ 6"	#4 @ 8"
6'-6"	8"	#4 @ 6"	#4 @ 8"
6'-9"	8"	#4 @ 6"	#4 @ 8"
7'-0"	8"	#4 @ 5½"	#4 @ 8"
7'-3"	8"	#4 @ 5"	#4 @ 7"
7'-6"	8"	#5 @ 7½"	#5 @ 8"
7'-9"	8"	#5 @ 7"	#5 @ 8"
8'-0"	8"	#5 @ 7"	#5 @ 8"
8'-3"	8"	#5 @ 7"	#5 @ 8"
8'-6"	8"	#5 @ 6½"	#5 @ 8"
8'-9"	8"	#5 @ 6½"	#5 @ 8"
9'-0"	8¼"	#5 @ 6½"	#5 @ 8"
9'-3"	8¼"	#5 @ 6½"	#5 @ 8"
9'-6"	8½"	#5 @ 6½"	#5 @ 8"
9'-9"	8½"	#5 @ 6"	#5 @ 8"
10'-0"	8¾"	#5 @ 6"	#5 @ 8"
10'-3"	8¾"	#5 @ 6"	#5 @ 8"
10'-6"	8¾"	#5 @ 5½"	#5 @ 8"
10'-9"	9"	#5 @ 5½"	#5 @ 8"
11'-0"	9"	#5 @ 5"	#5 @ 7"
11'-3"	9"	#5 @ 5"	#5 @ 7"
11'-6"	9¼"	#5 @ 5"	#5 @ 7"
11'-9"	9¼"	#5 @ 5"	#5 @ 7"
12'-0"	9½"	#5 @ 5"	#5 @ 7"
12'-3"	9½"	#6 @ 6½"	#5 @ 7"
12'-6"	9¾"	#6 @ 6½"	#5 @ 7"
12'-9"	9¾"	#6 @ 6½"	#5 @ 7"
13'-0"	10"	#6 @ 6½"	#5 @ 7"
13'-3"	10"	#6 @ 6½"	#5 @ 7"
13'-6"	10¼"	#6 @ 6½"	#5 @ 7"
13'-9"	10¼"	#6 @ 6½"	#5 @ 7"
14'-0"	10¼"	#6 @ 6"	#5 @ 7"
14'-3"	10¼"	#6 @ 6"	#5 @ 7"
14'-6"	10½"	#6 @ 6"	#5 @ 7"
14'-9"	10½"	#6 @ 6"	#5 @ 7"
15'-0"	10¾"	#6 @ 6"	#5 @ 7"

~~**Figure 1.9.1A**~~

Formatted: Font: Bold, Condensed by 0.1 pt

CONCRETE DECK REINFORCEMENT (LRFD DESIGN) with LONGITUDINAL BARS ON TOP
Standard Precast Prestressed Concrete members - Simple Spans

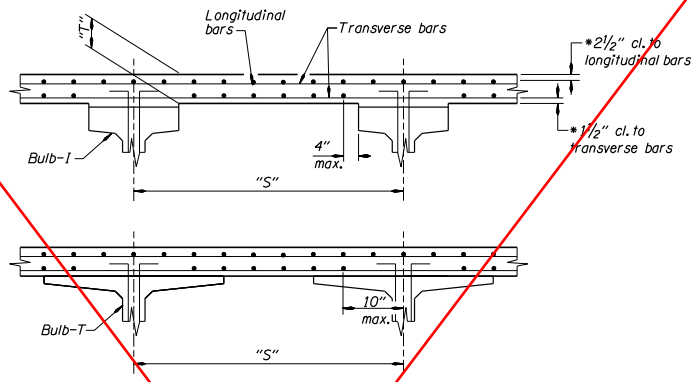

Assumptions

Specifications: AASHTO (Section 4.6.2.1)

Concrete Class: HPC 4000

Reinforcement: Grade 60

Top Mat Orientation: Longitudinal bars on top

Dead Load: 150 pcf + 50 psf future wearing surface

Deck DL moments: Negative -0.10wS°2 Positive +0.08wS°2

Live Load: Table A4-1 using 8" from ℄ of girder to the negative moment design section

Design Moment: 1.25*DL + 1.5*DW +1.75*LL (Impact included in Table A4-1 live loads

Surface wear: ½" allowance for surface wear subtracted from positive moment "d"

Note:
Additional reinforcement to accomodate rail loads at deck overhangs is not included in these details. The designer is responsible for design of overhangs.

Note:
"S" is measured parallel to the transverse bars. Bar spacing is measured perpendicular to the bars.

Place bottom mat bars directly below and in line with a top mat bar. At expansion and construction joints, however, it is not neccessary for all bottom mat bars to be directly below a top mat bar.

* For coastal locations, specify 2" clear top and bottom. See also Section 1.1.25.3 for additional corrosion protection recommendations.

Delete Chart

Precast Prestressed Concrete Members

Girder Spacing	Deck Thickness	Transverse Bars	Longitudinal Bars
2'-0"	8"	#4 @ 6½"	#4 @ 8"
5'-3"	8"	#4 @ 6½"	#4 @ 8"
5'-6"	8"	#4 @ 6½"	#4 @ 8"
5'-9"	8"	#4 @ 6½"	#4 @ 8"
6'-0"	8"	#4 @ 6½"	#4 @ 8"
6'-3"	8"	#4 @ 6"	#4 @ 8"
6'-6"	8"	#4 @ 6"	#4 @ 8"
6'-9"	8"	#4 @ 6"	#4 @ 8"
7'-0"	8"	#4 @ 5½"	#4 @ 8"
7'-3"	8"	#4 @ 5½"	#4 @ 8"
7'-6"	8"	#4 @ 5½"	#4 @ 8"
7'-9"	8"	#4 @ 5½"	#4 @ 8"
8'-0"	8"	#5 @ 7½"	#5 @ 8"
8'-3"	8"	#5 @ 7½"	#5 @ 8"
8'-6"	8"	#5 @ 7"	#5 @ 8"
8'-9"	8"	#5 @ 6½"	#5 @ 8"
9'-0"	8¼"	#5 @ 6½"	#5 @ 8"
9'-3"	8¼"	#5 @ 6½"	#5 @ 8"
9'-6"	8½"	#5 @ 6½"	#5 @ 8"
9'-9"	8½"	#5 @ 6½"	#5 @ 8"
10'-0"	8¾"	#5 @ 6½"	#5 @ 8"
10'-3"	8¾"	#5 @ 6½"	#5 @ 8"
10'-6"	8¾"	#5 @ 6"	#5 @ 8"
10'-9"	9"	#5 @ 6"	#5 @ 8"
11'-0"	9"	#5 @ 5½"	#5 @ 8"
11'-3"	9"	#5 @ 5½"	#5 @ 8"
11'-6"	9¼"	#5 @ 5½"	#5 @ 8"
11'-9"	9¼"	#5 @ 5"	#5 @ 7"
12'-0"	9½"	#5 @ 5"	#5 @ 7"

~~Figure 1.9.1B~~

Formatted: Font: Bold

CONCRETE DECK REINFORCEMENT (LRFD DESIGN) with TRANSVERSE BARS ON TOP

Steel Girders & Cast-in-Place Concrete box Girders - Simple Spans

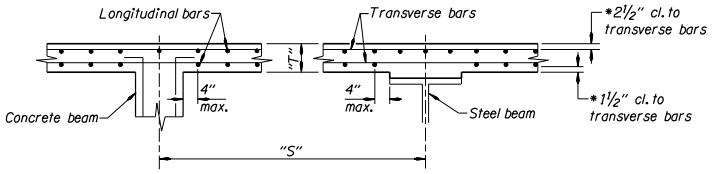

Assumptions

Specifications: AASHTO (Section 4.6.2.1)

Concrete Class: HPC 4000

Reinforcement: Grade 60

Top Mat Orientation: Transverse bars on top

Dead Load: 150 pcf + 50 psf future wearing surface

Deck DL moments: Negative -0.10wS°2
Positive +0.08wS°2

Live Load: Table A4-1 using 6" from ℄ of girder to the negative moment design section

Design Moment: 1.25*DL + 1.5*DW +1.75*LL
(Impact included in Table A4-1 live loads)

Surface wear: ½" allowance for surface wear subtracted from positive moment "d"

Steel Girders: Top flange width not less than 24". Project specific design is required when top flange is less than 24".

Concrete Box Girders: Girder stem width not less than 12". For girder stem greater than or equal to 16", use Deck Design Chart for Precast P/S Concrete Members

Note:
Additional reinforcement to accomodate rail loads at deck overhangs is not included in these details. The designer is responsible for design of overhangs.

Note:
"S" is measured parallel to the transverse bars. Bar spacing is measured perpendicular to the bars.

Place bottom mat bars directly below and in line with a top mat bar. At expansion and construction joints, however, it is not neccessary for all bottom mat bars to be directly below a top mat bar.

* For coastal locations, specify 2" clear top and bottom. See also Section 1.1.25.3 for additional corrosion protection recommendations.

Steel Girders & CIP Concrete Box Girders

Girder Spacing	Deck Thickness	Transverse Bars	Longitudinal Bars
5'-0"	8"	#4 @ 6½"	#4 @ 8"
5'-3"	8"	#4 @ 6½"	#4 @ 8"
5'-6"	8"	#4 @ 6½"	#4 @ 8"
5'-9"	8"	#4 @ 6½"	#4 @ 8"
6'-0"	8"	#4 @ 6"	#4 @ 8"
6'-3"	8"	#4 @ 6"	#4 @ 8"
6'-6"	8"	#4 @ 6"	#4 @ 8"
6'-9"	8"	#4 @ 6"	#4 @ 8"
7'-0"	8"	#4 @ 5½"	#4 @ 8"
7'-3"	8"	#4 @ 5½"	#4 @ 8"
7'-6"	8"	#4 @ 5½"	#4 @ 8"
7'-9"	8"	#4 @ 5½"	#4 @ 8"
8'-0"	8"	#5 @ 7½"	#5 @ 8"
8'-3"	8"	#5 @ 7½"	#5 @ 8"
8'-6"	8"	#5 @ 7½"	#5 @ 8"
8'-9"	8"	#5 @ 7"	#5 @ 8"
9'-0"	8¼"	#5 @ 7"	#5 @ 8"
9'-3"	8¼"	#5 @ 7"	#5 @ 8"
9'-6"	8½"	#5 @ 7"	#5 @ 8"
9'-9"	8½"	#5 @ 7"	#5 @ 8"
10'-0"	8¾"	#5 @ 7"	#5 @ 8"
10'-3"	8¾"	#5 @ 6½"	#5 @ 8"
10'-6"	8¾"	#5 @ 6½"	#5 @ 8"
10'-9"	9"	#5 @ 6½"	#5 @ 8"
11'-0"	9"	#5 @ 6"	#5 @ 8"
11'-3"	9"	#5 @ 5½"	#5 @ 8"
11'-6"	9¼"	#5 @ 5½"	#5 @ 8"
11'-9"	9¼"	#5 @ 5½"	#5 @ 8"
12'-0"	9½"	#5 @ 5½"	#5 @ 8"
12'-3"	9½"	#5 @ 5½"	#5 @ 8"
12'-6"	9¾"	#5 @ 5½"	#5 @ 8"
12'-9"	9¾"	#5 @ 5"	#5 @ 8"
13'-0"	10"	#5 @ 5"	#5 @ 8"
13'-3"	10"	#5 @ 5"	#5 @ 8"
13'-6"	10¼"	#5 @ 5"	#5 @ 8"
13'-9"	10¼"	#5 @ 5"	#5 @ 8"
14'-0"	10½"	#5 @ 5"	#5 @ 8"
14'-3"	10½"	#5 @ 5"	#5 @ 8"
14'-6"	10¾"	#5 @ 5"	#5 @ 8"
14'-9"	10¾"	#5 @ 5"	#5 @ 8"
15'-0"	11"	#5 @ 5"	#5 @ 8"

Figure 1.9.~~1C~~1A

CONCRETE DECK REINFORCEMENT (LRFD DESIGN) with TRANSVERSE BARS ON TOP
Standard Precast Prestressed Concrete members - Simple Spans

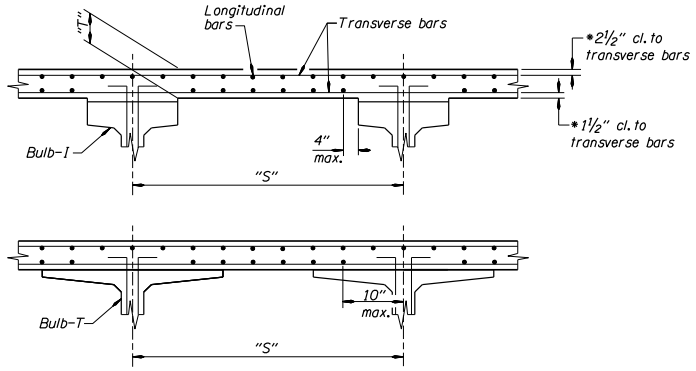

Assumptions

Specifications: AASHTO (Section 4.6.2.1)

Concrete Class: HPC 4000

Reinforcement: Grade 60

Top Mat Orientation: Transverse bars on top

Dead Load: 150 pcf + 50 psf future wearing surface

Deck DL moments: Negative -0.10wS°2 Positive +0.08wS°2

Live Load: Table A4-1 using 8" from ℄ of girder to the negative moment design section

Design Moment: 1.25*DL + 1.5*DW +1.75*LL (Impact included in Table A4-1 live loads

Surface wear: ½" allowance for surface wear subtracted from positive moment "d"

> Note:
> Additional reinforcement to accomodate rail loads at deck overhangs is not included in these details. The designer is responsible for design of overhangs.

Note:
"S" is measured parallel to the transverse bars. Bar spacing is measured perpendicular to the bars.

Place bottom mat bars directly below and in line with a top mat bar. At expansion and construction joints, however, it is not neccessary for all bottom mat bars to be directly below a top mat bar.

* For coastal locations, specify 2" clear top and bottom. See also Section 1.1.25.3 for additional corrosion protection recommendations.

Precast Prestressed Concrete Members

Girder Spacing	Deck Thickness	Transverse Bars	Longitudinal Bars
5'-0"	8"	#4 @ 6½"	#4 @ 8"
5'-3"	8"	#4 @ 6½"	#4 @ 8"
5'-6"	8"	#4 @ 6½"	#4 @ 8"
5'-9"	8"	#4 @ 6½"	#4 @ 8"
6'-0"	8"	#4 @ 6"	#4 @ 8"
6'-3"	8"	#4 @ 6"	#4 @ 8"
6'-6"	8"	#4 @ 6"	#4 @ 8"
6'-9"	8"	#4 @ 6"	#4 @ 8"
7'-0"	8"	#4 @ 5½"	#4 @ 8"
7'-3"	8"	#4 @ 5½"	#4 @ 8"
7'-6"	8"	#4 @ 5½"	#4 @ 8"
7'-9"	8"	#4 @ 5"	#4 @ 7"
8'-0"	8"	#5 @ 8"	#5 @ 8"
8'-3"	8"	#5 @ 7½"	#5 @ 8"
8'-6"	8"	#5 @ 7½"	#5 @ 8"
8'-9"	8"	#5 @ 7"	#5 @ 8"
9'-0"	8¼"	#5 @ 7"	#5 @ 8"
9'-3"	8¼"	#5 @ 7"	#5 @ 8"
9'-6"	8½"	#5 @ 7"	#5 @ 8"
9'-9"	8½"	#5 @ 7"	#5 @ 8"
10'-0"	8½"	#5 @ 7"	#5 @ 8"
10'-3"	8½"	#5 @ 6½"	#5 @ 8"
10'-6"	8¾"	#5 @ 6½"	#5 @ 8"
10'-9"	8¾"	#5 @ 6½"	#5 @ 8"
11'-0"	9"	#5 @ 6½"	#5 @ 8"
11'-3"	9"	#5 @ 6"	#5 @ 8"
11'-6"	9¼"	#5 @ 6"	#5 @ 8"
11'-9"	9¼"	#5 @ 6"	#5 @ 8"
12'-0"	9½"	#5 @ 6"	#5 @ 8"

Figure 1.9.~~1D~~1B

Analysis / Research / Other Supporting Data:

☒ None
☐ Attached:
- [name of attachment]
- [name of attachment]

[and/or enter text here]

Bridge Engineering Section Response:

☐ Accepted for consideration as submitted ☐ Accepted for consideration as noted ☐ Proposal tabled, see Remarks ☐ Proposal not accepted, see Remarks		
Remarks:		
[name of reviewer] Bridge Design Standards Reviewer		Date
Craig Shike Bridge Standards Managing Engineer		Date

Cc: file