Draft Final
South Hillsboro Focus Area Plan

June 2013

Prepared by:

DAVID EVANS AND ASSOCIATES INC.

Prepared for:

Hillsboro OREGON

Oregon Department of Transportation

Draft Final
South Hillsboro
Focus Area Plan

A plan to address anticipated future multimodal transportation needs in the Tualatin-Valley Highway (TV Hwy) Corridor Area

This project is partially funded by a grant from the Transportation and Growth Management (TGM) Program, a joint program of the Oregon Department of Transportation and the Oregon Department of Land Conservation and Development. This TGM grant is financed, in part, by the federal Safe, Accountable, Flexible, Efficient Transportation Equity Act: A Legacy for Users (SAFETEA-LU), local government, and the State of Oregon Funds.

Prepared by:

David Evans and Associates, Inc.
2100 SW River Parkway
Portland, Oregon 97201

Prepared for:

City of Hillsboro
150 East Main St.
Hillsboro, Oregon 97123-4028

and

Oregon Department of Transportation
123 NW Flanders Street
Portland, Oregon 97209

TABLE OF CONTENTS

LIST OF ACRONYMS ..... **III**

INTRODUCTION **1**

BACKGROUND **2**

South Hillsboro Community Plan 2
TV Highway Corridor Plan 3

FOCUS AREA PLAN MULTIMODAL NETWORK **4**

Motor Vehicle 5
Pedestrian and Bicycle Network 5
Transit 6

NEAR TERM IMPROVEMENTS WITHIN FOCUS PLAN PROJECT AREA **7**

FOCUS AREA PLAN TRANSPORTATION ANALYSIS **16**

Future Traffic Volume Development 16
Future Traffic Operations Analysis Methodology 17
Intersection Operations Improvements – without South Hillsboro 19
Intersection Operations Improvements – with South Hillsboro 20

FOCUS AREA PLAN TRANSPORTATION INFRASTRUTURE COST ESTIMATES **24**

Without south hillsboro Base case mitigation costs 25
With South Hillsboro Transportation Mitigation Costs 25

FOCUS AREA PLAN ACCESS MANAGEMENT POLICY **28**

IMPLEMENTATION AND NEXT STEPS **35**

LIST OF FIGURES

FOLLOWS PAGE

Figure 1: Focus Plan Project Area 2
Figure 2a: Typical Cross Section at TV Hwy and Brookwood Parkway - Existing 3
Figure 2b: Typical Cross Section at TV Hwy and Brookwood Parkway - Proposed 4
Figure 3: TVCP Near Term Actions within the Focus Area Plan Project Area 7
Figure 4: 2035 Without South Hillsboro Turning Movement Volumes AM & PM Peak Hour 17
Figure 5: 2035 With South Hillsboro Turning Movement Traffic Volumes AM & PM Peak Hour 17
Figure 6: 2035 Without South Hillsboro Base Case Traffic Operations AM Peak Hour 19
Figure 7: 2035 Without South Hillsboro Base Case Traffic Operations PM Peak Hour 19
Figure 8: 2035 Without South Hillsboro Mitigated Traffic Operations AM Peak Hour 19
Figure 9: 2035 Without South Hillsboro Mitigated Traffic Operations PM Peak Hour 19
Figure 10: 2035 With South Hillsboro No Mitigation Traffic Operations AM Peak Hour 23
Figure 11: 2035 With South Hillsboro No Mitigation Traffic Operations PM Peak Hour 23
Figure 12: 2035 With South Hillsboro Mitigated Traffic Operations AM Peak Hour 23
Figure 13: 2035 With South Hillsboro Mitigated Traffic Operations PM Peak Hour 23

LIST OF TABLES

Table 1: South Hillsboro Community Plan Comprehensive Plan Designations 3
Table 2: Recommended Focus Area Plan Near Term (0-15 years) Actions 8
Table 3: Summary of Operational Thresholds 19
Table 4: 2035 with 2012 UGB Build-out Without South Hillsboro Base Case Mitigated Traffic Operations 20
Table 5: 2035 with 2012 UGB Build-out With South Hillsboro Traffic Operations 21
Table 6: Comparison of Roadway Capacities 24
Table 7: Recommended Base Case Mitigation Projects 25
Table 8: South Hillsboro Plan Transportation Improvements 25
Table 9: TV Highway Approach Density in and near the Focus Plan Project Area 28
Table 10: OHP Approach Standards 30

APPENDICES

Appendix A: TV Highway Corridor Plan (TVCP) Goals
Appendix B: 2035 Traffic Volumes without South Hillsboro
Appendix C: 2035 Traffic Volumes with South Hillsboro
Appendix D: Arterial v. Throughway Issue Paper
Appendix E: 2035 Traffic Operations Base Case without South Hillsboro
Appendix F: 2035 Traffic Operations Mitigated without South Hillsboro
Appendix G: 2035 Traffic Operations with South Hillsboro
Appendix H: 2035 Traffic Operations Mitigated with South Hillsboro
Appendix I: Access management Plans, Policies and Code

LIST OF ACRONYMS

AADT	Annual Average Daily Traffic
APM	Analysis Procedures Manual
BPA	Bonneville Power Administration
CAC	Community Advisory Committee
City	City of Hillsboro
FAP	Focus Area Plan
FHWA	Federal Highway Administration
FTA	Federal Transit Administration
HCM	Highway Capacity Manual
HCS	Highway Capacity Software
HCT	High Capacity Transit
LOS	Level of Service
MPO	Metropolitan Planning Organization
NCHRP	National Cooperative Highway Research Program
NHS	National Highway System
OAR	Oregon Administrative Rule
ODOT	Oregon Department of Transportation
OHP	Oregon Highway Plan
ORS	Oregon Revised Statute
OTC	Oregon Transportation Commission
PG	Policy Group
PMT	Project Management Team
ROW	right-of-way
RTP	Regional Transportation Plan
SOV	Single-Occupant Vehicle
SPIS	Safety Priority Index System
TAC	Technical Advisory Committee
TEV	Total Entering Volume
TPR	Transportation Planning Rule
TSP	Transportation System Plan
TVCP	TV Highway Corridor Plan
TV Hwy	Tualatin-Valley Highway
UGB	Urban Growth Boundary
v/c	volume-to-capacity

This page intentionally left blank.

INTRODUCTION

Tualatin-Valley Highway (TV Hwy) is a key roadway in an area that experiences heavy levels of congestion, with many intersections operating above capacity. The TV Hwy Corridor also experiences conflicts between modes, such as at-grade rail crossings and pedestrian/bicycle highway crossings. In 2009, the City of Hillsboro (the City) was granted a Transportation and Growth Management Grant to develop solutions for both the TV Hwy Corridor and the South Hillsboro Focus Plan Project Area.

The Focus Area Plan (FAP) identifies the transportation system solutions for the transportation network within the Traffic Analysis Area (see **Figure 1**) necessary to address existing and future transportation system deficiencies with the build-out of the South Hillsboro Community Plan in addition to transportation system solutions provided in the TV Highway Corridor Plan (TVCP). The Traffic Analysis Area addressed in this report extends beyond the boundaries of the Focus Plan Project Area to evaluate any traffic impacts associated with South Hillsboro Community Plan that may impact the surrounding community.

The intent of this plan is to build upon the work done for the TVCP to identify improvements to facilitate development of a more complete, multimodal, and better connected network of streets and multi-use facilities to provide for a livable and sustainable community. The FAP also seeks to aid in implementing the goals and objectives of the South Hillsboro Community Plan.

The FAP was developed to be consistent with the TVCP goals adopted by the TVCP team, which are consistent with the Regional Transportation Plan (RTP) (see **Appendix A**). The FAP Project Management Team (PMT), composed of Oregon Department of Transportation (ODOT), City of Hillsboro, Washington County, and consultant staff, developed the FAP with consideration of input from the TVCP Technical Advisory Committee (TAC), the Community Advisory Committee (CAC), the Policy Group (PG), and the public (including input gathered at open houses and online). The FAP incorporates the TVCP recommended actions but includes further guidance on their timing and implementation. The FAP focuses on the near term actions (those to be completed in the next 15 years) recommended in the TVCP, while also considering ways to leverage funding and support for other worthwhile projects, such as those listed as part of the TVCP's opportunistic actions. The FAP will be completed concurrently with the Aloha-Reedville Study and Livable Community Plan and the Washington County Transportation System Plan update.[1]

Overall, the FAP is a concentrated examination of the transportation system within the Focus Plan Project Area (which is defined by 198th Avenue on the east, Brookwood Avenue/River Road on the west, Baseline Road on the north, and Farmington Road on the south) to identify needs and recommend improvements for all modes of transportation. To provide a succinct and functional assessment of the transportation system in the Focus Plan Project Area and clearly identify the improvements necessary to

[1] *The FAP is also consistent with the Transportation Overlay Section 31 of the South Hillsboro Community Plan (agreed upon by the City of Hillsboro and Washington County and adopted by City Council in September 2012), such that "no adoption of city zoning or approval of development shall be permitted by the city in the South Hillsboro Plan Area until such time as the requirements of Transportation Planning Rule (OAR 660-012-0060) (TPR) have been met for the entirety of the South Hillsboro Community Plan Area and amendments have been made to the City Transportation System Plan (TSP) to address transportation improvements required by the impacts of the development of the South Hillsboro Plan Area. The TSP shall allow phased implementation of identified transportation system improvements."*

support the implementation of the South Hillsboro Community Plan, this FAP is organized into seven sections:

- Background
- Focus Area Plan Multimodal Network
- Near Term Improvements within Focus Plan Project Area
- Focus Area Plan Transportation Analysis
- Focus Area Plan Transportation Infrastructure Cost Estimates
- Focus Area Plan Access Management Policy
- Implementation and Next Steps

BACKGROUND

The FAP support the implementation of the South Hillsboro Community Plan and TVCP.

SOUTH HILLSBORO COMMUNITY PLAN

On October 20, 2011, the Metro Council approved expansion of the region's urban growth boundary (UGB) including, but not limited to, a 1,063-acre area in South Hillsboro, east of Southwest 229th Avenue and south of TV Hwy. The additions to the UGB took effect on January 18, 2012. The land use plan that covers this South Hillsboro UGB expansion area is the South Hillsboro Community Plan.

In 2008, the City of Hillsboro Planning Commission and City Council endorsed by joint resolution the South Hillsboro Community Plan, which was prepared with direction from a citizen-led Task Force, the Technical Advisory Committee, the Hillsboro Planning Commission, a stakeholder advisory team, a consultant team, and City staff. City staff and service providers, in partnership with major property owners and other community members, a consulting team, and the Hillsboro Planning Commission, updated the plan in 2012. The South Hillsboro Community Plan provides the framework of values for land use and development of the South Hillsboro Community Plan Area.

The South Hillsboro Community Plan addresses approximately 1,400 acres within South Hillsboro Community Plan Area. The plan identifies land use designations and infrastructure needs consistent with Metro's 2040 Growth Concept designations for the area for a new town center surrounded by residential mixed use (of varying densities) that can accommodate: retail and service uses, employment opportunities, civic facilities, schools, community and neighborhood parks, and natural areas. Ultimately, as identified in the South Hillsboro Community Plan, there is a unique opportunity at the edge of an urbanized area to create a distinctive, livable community while protecting natural resources and to:

- Provide a coordinated transportation grid;
- Preserve green corridors and blend the corridors with other community assets; and
- Improve Hillsboro's housing/jobs balance.

The majority of the South Hillsboro Community Plan Area will be designated low and medium density residential, as shown in **Table 1**. However, more than 10 percent of the area will be open space and 7 percent will be mixed use.

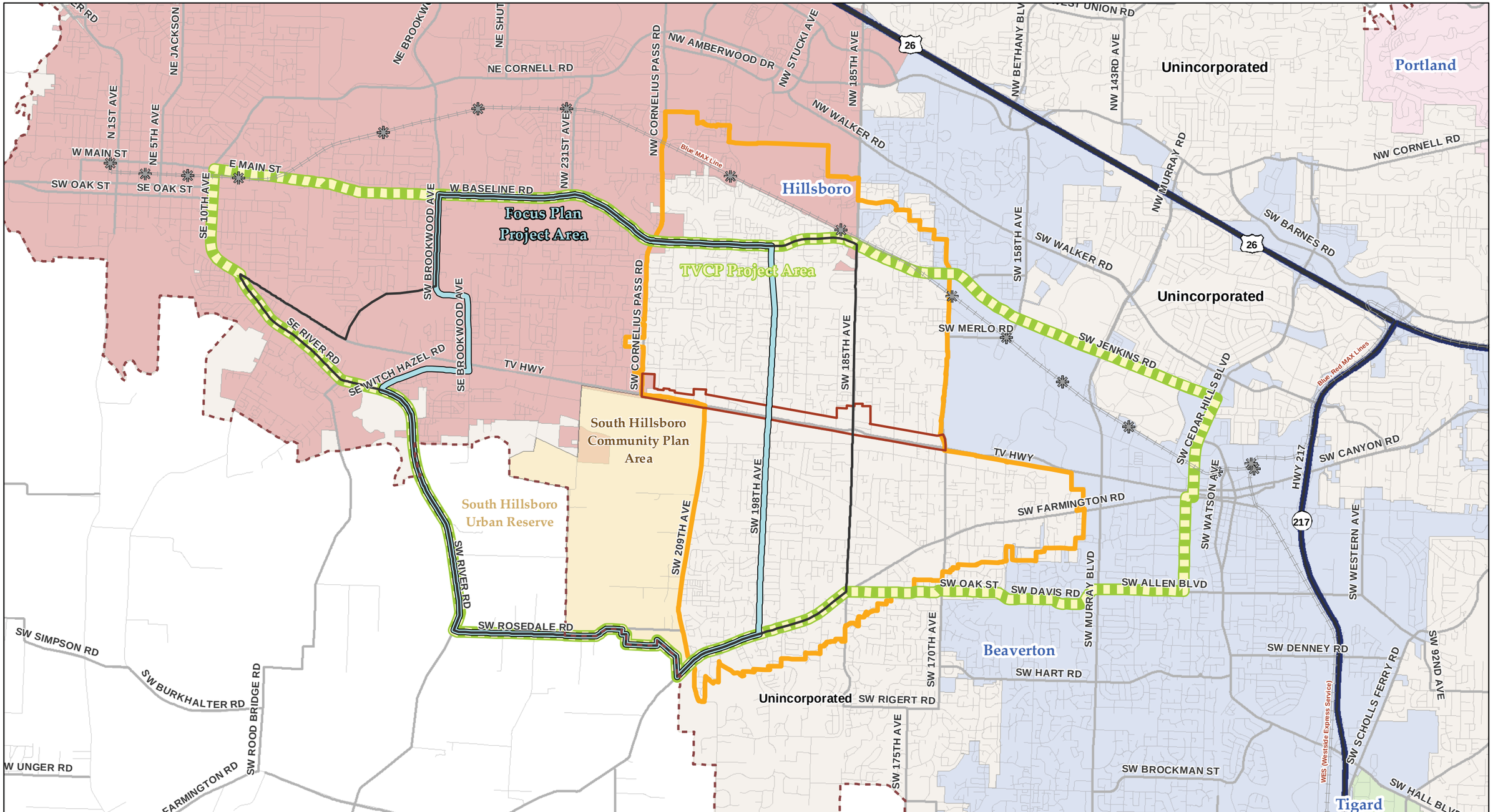

Hillsboro OREGON

Figure 1

Focus Plan Project Area

South Hillsboro Focus Area Plan

Document Path: P:\O\ODOT00000737\0600\INFO\GS\ArcMap\Focus Area Plan\Fig_01_Focus_Area_Study_Area.mxd
Date: 3/26/2013 Time: 10:52:26 AM User Name: mmf

Table 1: South Hillsboro Community Plan Comprehensive Plan Designations

COMPREHENSIVE PLAN DESIGNATION	GROSS ACRES	ACRES %	NET RESIDENTIAL ACRES	DWELLING UNITS	UNITS PER NET RESIDENTIAL ACRE
LOW DENSITY RESIDENTIAL	454	32%	324	2,426	7.5
MEDIUM DENSITY RESIDENTIAL	392	28%	329	5,265	16.0
HIGH DENSITY RESIDENTIAL	54	4%	48	1,023	21.2
MID-RISE DENSITY RESIDENTIAL	28	2%	24	693	28.7
MIXED USE COMMERCIAL (520,000 SQ. FT.)	17	1%	6	211	35.0
MIXED USE URBAN RESIDENTIAL	86	6%	39	1,633	42.0
PUBLIC FACILITY	133	10%	-	-	-
OPEN SPACE	167	12%	-	-	-
FLOODPLAIN	69	5%	-	-	-
TOTAL	**1,400**	**100%**	**770**	**11,251**	**-**

TV HIGHWAY CORRIDOR PLAN

To make travel within and through the area more safe and convenient for people who use different transportation modes, the TV Highway Corridor Plan (TVCP) identifies critical near term (within the next 15 years) transportation improvement actions and provides for the application of an adaptive and shared corridor management approach (through partnerships between stakeholder jurisdictions) to prioritize and develop future transportation solutions for the TV Hwy Corridor. While the TVCP Project Area extends beyond the Focus Plan Project Area, many of its projects are also located in the South Hillsboro Focus Plan Project Area.

The TVCP is a focused and intensive examination of the transportation system to identify needs and recommend improvements for all modes of transportation for the key purposes of:

- Improving mobility for multimodal travel;
- Enhancing safety, connectivity, and accessibility within the TV Hwy Corridor for all modes of travel;
- Strengthening and supporting economic vitality;
- Improving the visual appearance of TV Hwy;
- Improving air and water quality within the TV Hwy Corridor; and
- Reducing vehicle miles traveled within the corridor by expanding transportation choices (e.g., improving options for auto, public transit, freight, bike, and pedestrian mobility).

An overarching goal of the TVCP is to reflect community needs and desires for the corridor to evolve into a thriving, welcoming place that connects this vibrant, growing community now and for future generations. A joint effort with ODOT, Metro, the City of Hillsboro, and in partnership with the City of Beaverton and Washington County, the TVCP seeks to help advance the aspirations, goals, and objectives of previously adopted as well as concurrent public policy and community planning efforts.

The TVCP PMT, composed of ODOT, City of Hillsboro, Washington County, and consultant staff, developed the TVCP with consideration of input from the TVCP TAC, the CAC, the Policy Group, and the public (including input gathered at open houses and online).

FOCUS AREA PLAN MULTIMODAL NETWORK

The backbone of the Focus Area Plan transportation network is TV Hwy. Consistent with the TVCP Policy Group's policy direction[2] to maintain the design and function of TV Hwy as an urban arterial that will not exceed motorized vehicle capacity of two through travel lanes in each direction, proposed actions along TV Hwy will be developed during subsequent refinement planning and design work to maximize the use of the typical 100 feet to 107 feet of existing right-of-way (ROW) to serve multimodal travel, as shown in the proposed typical cross sections (**Figures 2a** and **2b**). The transportation network surrounding TV Hwy in the Focus Plan Project Area has a well-developed arterial and collector network to the north and a lack of one to the south. The following is a summary of the proposed improvements for TV Hwy as depicted in the TVCP [3,4] and surrounding network improvements necessary to provide a coordinated, multimodal transportation system in the Focus Plan Project Area.

Figure 2a: Typical Cross Section at TV Hwy and Brookwood Avenue - Existing

[2] *See Appendix D – Arterial v. Throughway Issue Paper.*

[3] *Note: Depending on each particular intersection, there would likely be some variation of the typical cross section profiles presented. Further study may indicate preference for raised multi-use path south of railroad ROW.*

[4] *ROW widths will be verified by agency technical staff.*

Figure 2b: Typical Cross Section at TV Hwy and Brookwood Avenue - Proposed

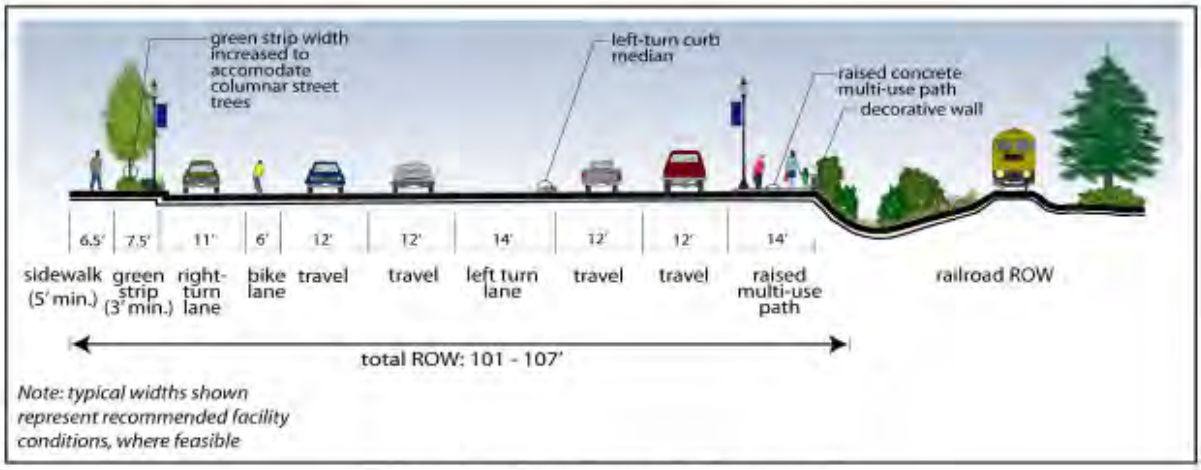

TV Hwy at Brookwood - *Proposed*

MOTOR VEHICLE

TV HIGHWAY

According to the TVCP, motor vehicle through travel lane widths would remain the same (12 feet), as would the number of lanes in each direction (two). However, the right-turn lane width could be reduced from 15 feet to 11 feet. The median left-turn lane would also remain the same width (14 feet); however, where turn movements are not permitted, and where feasible, the 14-foot-wide median turn lane could include a raised median with low landscaping. Additionally, the median turn lane area would include protected pedestrian crossings, including signage. Several intersections would be improved for safety, as outlined in the following section.

SURROUNDING NETWORK

Motor vehicle improvements within the Focus Plan Project Area are shown on **Figure 3** and listed in **Table 2**. In general, motor vehicle improvements are intended to increase safety while strengthening the collector and arterial circulation networks. Most of the roadway network improvements are in the South Hillsboro Community Plan Area. Additionally, the TVCP includes a project to reduce driving by promoting employer incentive programs.

PEDESTRIAN AND BICYCLE NETWORK

TV HIGHWAY

As shown in the cross sections, the existing 6.5 feet of sidewalk width on the north side of TV Hwy would remain, and sidewalk gaps would be infilled. Abutting the sidewalk would be a landscaped buffer strip between 3 feet and 7.5 feet wide, depending on available ROW, and there would be striped bicycle lanes 6 feet wide past the buffer strip. Where there is a right-turn lane, the bicycle lanes would be located between the through lanes and the right-turn lane. On the south side of TV Hwy, a raised 14-foot multi-use path and a functional wall with decorative elements separating the multi-use path from the railroad tracks are recommended to be constructed beyond the completion of the TVCP (in 15

years or more). Through the South Hillsboro area, a trail route south of the railroad tracks may also be considered. In the near term (next 15 years), several crossings of TV Hwy will have pedestrian and bicycle improvements.

SURROUNDING NETWORK

All of the arterial and collector recommended roadway improvements include sidewalks and bicycle lanes to provide a more interconnected bicycle and pedestrian network throughout the Focus Plan Project Area. Trails, as identified in the RTP north of TV Hwy, include Beaverton Creek/Bronson Creek Trail and Rock Creek Trail. Trails south of TV Hwy, as identified in the South Hillsboro Community Plan, would consist of the open space trail network in the Bonneville Power Administration (BPA) corridor that runs north/south between SW Cornelius Pass Road and SW 209th Avenue. Several east-to-west open space trails along riparian corridors are also shown in the South Hillsboro Community Plan.

TRANSIT

TV HIGHWAY

In addition to the roadway and street network improvements recommended for South Hillsboro in the FAP, the following transit-based recommendations should also improve mobility and livability within the area. This includes capital improvements (such as concrete landing pads, benches, and bus shelters) along the south side of TV Hwy and SE 40th Avenue, improved bus service along TV Hwy, and new north-south bus service along Century Boulevard. More frequent bus service along TV Hwy (bus route #57) may attract additional riders and allow for the movement of more people through the corridor. This recommended action would restore bus service on TV Hwy to run more frequently, especially at peak commute hours. Improving service, in combination with other functional improvements recommended (such as the implementation of Transit Signal Priority and/or the addition of bus pull-outs), may decrease the overall travel time for riders.

SURROUNDING NETWORK

New north-south bus service would connect the communities of South Hillsboro and Aloha-Reedville to the North Hillsboro, Tanasbourne/Amberglen, Bethany, and Sunset Corridor Employment areas, thereby reducing long-distance regional commute trips by Single-Occupant Vehicles (SOVs). The City of Hillsboro and TriMet are currently working on a Westside Transit Enhancement Study that evaluates the benefits of providing north-south bus service. To provide the additional benefit, the north-south transit lines should coordinate arrival times with the MAX line and reduce or eliminate the need for transfers by bringing users close to large business areas.

NEAR TERM IMPROVEMENTS WITHIN FOCUS PLAN PROJECT AREA

The following map (**Figure 3**) shows existing land uses, streets, and bicycle and pedestrian facilities as well as the recommended transportation improvements to be implemented within the near term (next 15 years). The maps include markings to show intersections and pedestrian crossings to be improved, recommended federal financially constrained Regional Transportation Plan (RTP) projects (Federal RTP) and local financially constrained (State RTP) projects, and other recommended actions in the corridor.[5] The Federal RTP has the smallest number of projects included in it. The State RTP adds projects that local agencies are confident will be funded based on historical state funding patterns.

The FAP provides further definition of additional improvements identified within the Focus Plan Project Area, based upon closer examination of transportation needs both with and without the planned development in the South Hillsboro Community Plan Area. **Table 2**, which corresponds to the map (**Figure 3**), shows the proposed near term projects recommended within the Focus Plan Project area, and numbers the projects according to their numbering on the map. **Table 2** indicates whether the improvement is a Base Case improvement (currently identified transportation need without the planned development in the South Hillsboro Community Plan Area), a Base Case mitigation (additional transportation need without the planned development in the South Hillsboro Community Plan Area beyond what is included in the Base Case), or a South Hillsboro mitigation (a transportation need with the planned development in the South Hillsboro Community Plan Area).

[5] *In order to receive federal funding through the U.S. Department of Transportation, Metropolitan Planning Organizations (MPOs) such as Metro are required to include a financial plan in the RTP. The financial plan estimates how the MPO reasonably expects to fund the projects included in the plan, including anticipated revenues from the Federal Highway Administration (FHWA), the Federal Transit Administration (FTA), state government, regional or local sources, the private sector, and user charges. The metropolitan transportation plan must demonstrate that there is a balance between the expected revenue sources for transportation investments and the estimated costs of the projects and programs described in the plan. In other words, a metropolitan plan must be fiscally (or financially) constrained.*

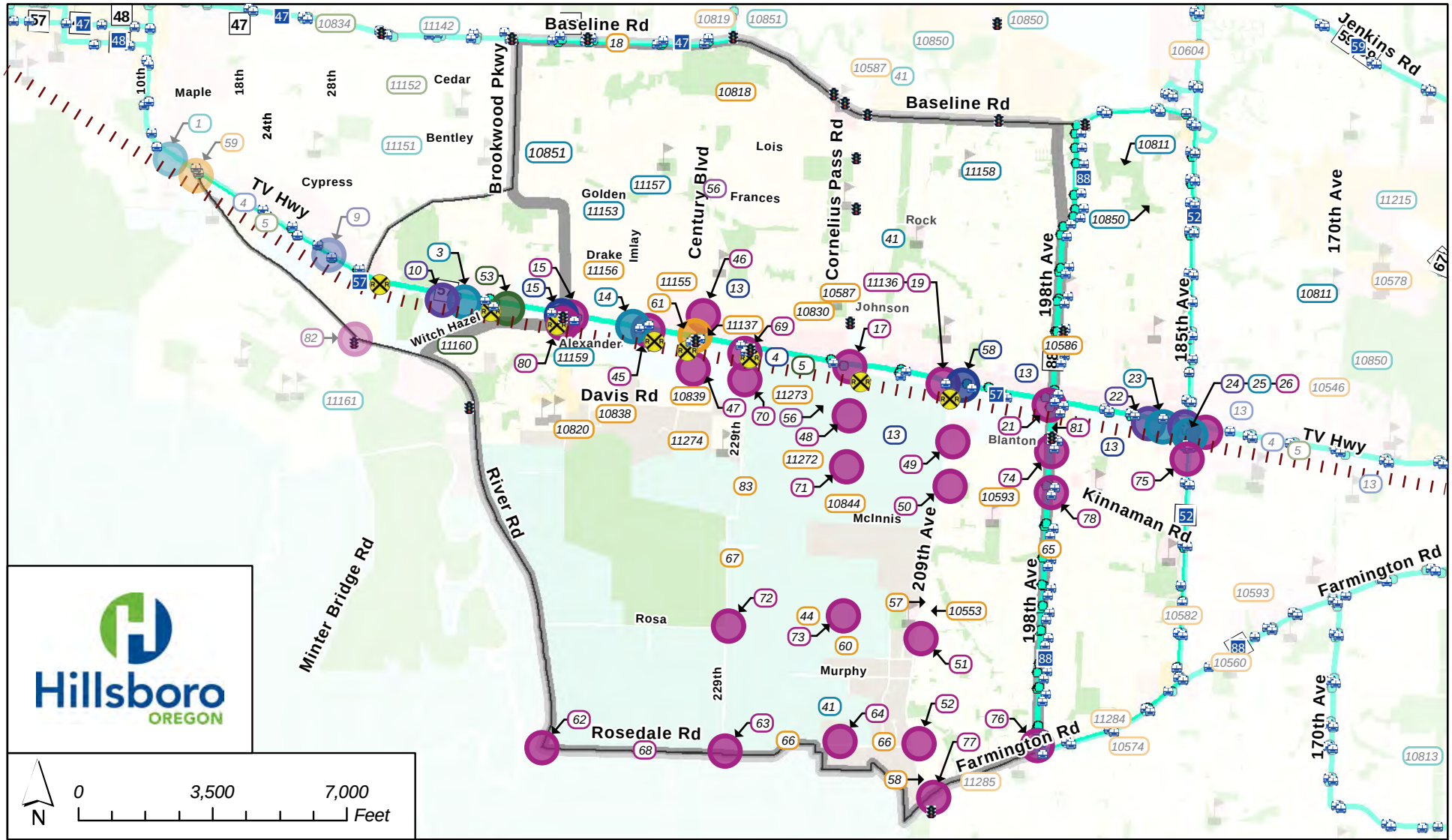

Railroad Corridor

TriMet Bus Route Number and Bus Stop

Railroad Crossing

Schools

Existing Signal (Implement Signal Timing)

Generalized Zoning

- Commercial
- Future Urban Develop.
- Industrial
- Multi-Family
- Mixed-Use Residential
- Parks & Open Spaces
- Rural
- Single Family

Intersection Improvements (Near Term)

- Bike Facilities
- Bike/Ped Facilities
- Motor Vehicle Facilities
- Multi-modal Facilities

Bus Stop Improvements (Near Term)

- Transit Facilities

Street/Trail Improvements (Near Term)

- Bike Facilities
- Pedestrian Facilities
- Motor Vehicle Facilities
- Multi-modal Facilities

Transit Improvements

- Transit Facilities

State RTP Financially Constrained Projects (Recommended/Near Term)

- Multi-modal Facilities

Federal RTP Financially Constrained Projects (Recommended/Near Term)

- Pedestrian Facilities
- Bike/Ped Facilities
- Multi-modal Facilities

Figure 2

TVCP Near Term Actions within the Focus Area Plan Project Area

TV Hwy Focus Area Plan

Document Path: P:\O\ODOT00000737\0600\INFO\GS\ArcMap\Focus Area Plan\BASE_Focus_Area.mxd
Date: 2/12/2013 Time: 3:16:09:53 PM User Name: mmf

COLOR KEY
MULTI-MODAL
BIKE
PEDESTRIAN
BIKE/PEDESTRIAN
TRANSIT
MOTOR VEHICLE/FREIGHT

Table 2: Recommended Focus Area Plan Near Term (0-15 years) Actions

RTP/Map Project Number	Location	Proposed Project	Base Case Improvement	Base Case Mitigation	South Hillsboro Mitigation	Implementation
1	13th Ave. at TV Hwy Intersection	Improve bike and pedestrian crossing of TV Hwy.	X			Near Term
3	40th Ave. at TV Hwy Intersection	Improve pedestrian and bicyclist crossing of TV Hwy.	X			Near Term
4	TV Hwy	Complete bike lanes on TV Hwy.	X			Near Term
5	TV Hwy	Fill gaps in sidewalks and add landscape buffer along TV Hwy	X			Near Term
9	SE 24th Ave. and TV Hwy (south side)	Improve bus stop.	X			Near Term
10	SE 40th Ave. and TV Hwy (south side)	Improve bus stop.	X			Near Term
11	TV Hwy	Reduce vehicle turn movements to/from driveways on TV Hwy.				Opportunistic
12	TVCP Project Area	Complete bike lanes and sidewalks within TVCP project area.				Opportunistic
13	TVCP Project Area	Develop continuous East-West parallel bike routes.	X			Near Term
14	Imlay Ave. at TV Hwy Intersection	Improve bike and pedestrian crossing of TV Hwy.	X			Near Term
15	Brookwood Pkwy at TV Hwy Intersection	Improve bike crossing of TV Hwy.	X			Near Term
15	Brookwood Pkwy at TV Hwy Intersection	Extend the southbound left-turn lane by 400 feet.		X		Near Term
17	Cornelius Pass Rd. and TV Hwy Intersection	Add protected northbound left-turn signal, add eastbound and westbound right-turn lanes, add dual left-turn lanes on all approaches. Northbound approach would have 2 left, 2 through and 1 right-turn lane. Southbound approach would have 2 left, 1 through, and 1 through/right-turn lane. New rail crossing.			X	Near Term
18	Baseline Rd. (231st Ave. to Brookwood)	Improve to 5 lanes with bike/ped facilities, storm drainage, and street lighting. MSTIP 18	X			Near Term
19	209th Ave. and TV Hwy Intersection	Add eastbound right -turn lane and signal timing adjustments. Part of RTP 11136		X		Near Term
19	209th Ave. and TV Hwy Intersection	Make northbound and southbound left turns protective/permissive (flashing yellow)	X			Near Term

COLOR KEY
MULTI-MODAL
BIKE
PEDESTRIAN
BIKE/PEDESTRIAN
TRANSIT
MOTOR VEHICLE/FREIGHT

Table 2: Recommended Focus Area Plan Near Term (0-15 years) Actions

RTP/Map Project Number	Location	Proposed Project	Base Case Improvement	Base Case Mitigation	South Hillsboro Mitigation	Implementation
21	SW 198th Ave. and TV Hwy Intersection	Add dual westbound left-turn lane and a southbound right-turn lane. Modify Signal. Make northbound and southbound left turns protective/permissive (flashing yellow). Convert northbound lanes to a left, through, and through/right.			X	Near Term
22	SW 192nd Ave. and TV Hwy (south side)	Improve bus stop.	X			Near Term
23	192nd Ave. at TV Hwy Intersection	Improve bike and pedestrian crossing of TV Hwy.	X			Near Term
24	TV Hwy and SW 185th Ave. (south side)	Improve bus stop.	X			Near Term
25	185th Ave. at TV Hwy Intersection	Improve bike and pedestrian crossing of TV Hwy.	X			Near Term
26	SW 185th Ave. and TV Hwy Intersection	Add eastbound, westbound, northbound, and southbound dual left-turn lanes. Add eastbound right-turn lane. Modify Signal.		X		Near Term
26	SW 185th Ave. and TV Hwy Intersection	Add westbound right-turn lane.			X	Near Term
44	SW Rosa Rd. Extension	Extend Rosa Rd. from 209th to 229th (including bike lanes and sidewalks).			X	Near Term
45	Imlay Ave. and TV Hwy Intersection	Install a new signal, as listed in the Signal Master Plan (Part of RTP 10841 project)	X			Near Term
46	Johnson St. and Century Blvd. Intersection	Install a new signal, as listed in the Signal Master Plan (Part of RTP 10841 project)	X			Near Term
47	Alexander St. and Century Blvd. Intersection	Install a new signal, as listed in the Signal Master Plan (Part of RTP 10841 project).			X	Near Term
48	Alexander St. and Cornelius Pass Rd. Intersection	Install a new signal, as listed in the Signal Master Plan (Part of RTP 10841 project). Add additional turn lanes where appropriate.			X	Near Term
49	Blanton St. and 209th Ave. Intersection	Install a new signal, as listed in the Signal Master Plan (Part of RTP 10841 project). Add westbound left-turn lane. Add second northbound and southbound through lanes.			X	Near Term
50	Kinnaman Rd. and 209th Ave. Intersection	Install a new signal, as listed in the Signal Master Plan (Part of RTP 10841 project). Add second northbound and southbound through lanes.			X	Near Term

COLOR KEY
MULTI-MODAL
BIKE
PEDESTRIAN
BIKE/PEDESTRIAN
TRANSIT
MOTOR VEHICLE/FREIGHT

Table 2: Recommended Focus Area Plan Near Term (0-15 years) Actions

RTP/Map Project Number	Location	Proposed Project	Base Case Improvement	Base Case Mitigation	South Hillsboro Mitigation	Implementation
51	Rosa Rd. and 209th Ave.	Signalize intersection. Add second northbound and southbound through lanes.			X	Near Term
52	Rosedale Rd. and 209th Ave.	Signalize intersection.			X	Near Term
52	Rosedale Rd. and 209th Ave.	Add eastbound right-turn lane.		X		Near Term
53	SE 44th Ave./SE 45th Ave. and TV Hwy	Install Rectangular Rapid Flash Beacon (RRFB). Potential ODOT Fix-it Project	X			Near Term
56	Century Blvd.	Improve North-South bus service along Century Blvd.	X			Near Term
57	209th Ave. (TV Hwy to Farmington)	Widen to a 5 lane facility with bike lanes/sidewalks.			X	Near Term
58	209th Ave. and TV Hwy Intersection	Improve bike crossing of TV Hwy.		X		Near Term
59	River Rd. and TV Hwy Intersection	Add second northbound left-turn lane and modify rail crossing. Add protective/permissive (flashing yellow) to eastbound and westbound left turns.	X			Near Term
60	Cornelius Pass Rd. (Rosa Rd. to Rosedale Extension)	Extend as a 5 lane facility with bike lanes/sidewalks. Add turn lanes where appropriate			X	Near Term
61	TV Hwy/Century Blvd. Intersection	Add protective/permissive phasing in all directions.			X	Near Term
62	River Rd. and Rosedale Rd.	Install Roundabout.			X	Near Term
63	Rosedale Rd. and 229th Ave.	Add eastbound left-turn lane.			X	Near Term
64	Rosedale Rd. and Cornelius Pass Rd.	Install Roundabout.			X	Near Term
65	198th Ave. (Farmington to TV Hwy)	Revised scope includes 1) Phase of full 3-lane improvement or 2) possible interim safety/capacity spot improvements. Include bike/ped facilities, storm drainage and street lighting as appropriate. MSTIP 28	X			Near Term

COLOR KEY
MULTI-MODAL
BIKE
PEDESTRIAN
BIKE/PEDESTRIAN
TRANSIT
MOTOR VEHICLE/FREIGHT

Table 2: Recommended Focus Area Plan Near Term (0-15 years) Actions

RTP/Map Project Number	Location	Proposed Project	Base Case Improvement	Base Case Mitigation	South Hillsboro Mitigation	Implementation
66	Rosedale Rd. Widening	Widen to 3-lanes from 209th Ave. to 229th Ave. with bike lanes and sidewalks.			X	Near Term
67	229th Ave.	Widen to 3-lanes with bike lanes and sidewalks from McInnis to Rosedale.			X	Near Term
68	Rosedale Rd.	Add rural shoulder improvements from River Rd to 229th Ave.			X	Near Term
69	229th Ave. and TV Hwy Intersection	Close south leg of intersection to extend Cornelius Pass Rd south. Remove roadway and build a cul-de-sac.			X	Near Term
70	Alexander St. and 229th Ave.	Add eastbound left-turn lane. Change to northbound/southbound stop control.			X	Near Term
71	Kinnaman Rd. and Cornelius Pass Rd.	Signalize intersection.			X	Near Term
72	Rosa Rd. and 229th Ave.	Install Roundabout.			X	Near Term
73	Rosa Rd. and Cornelius Pass Rd.	Signalize intersection.			X	Near Term
74	198th Ave. and Blanton St. (North & South)	Realign and/or Signalize offset intersections.		X		Near Term
75	185th Ave. and Blanton St. (North & South)	Realign and/or Signalize offset intersections.		X		Near Term
76	185th Ave. and Farmington Rd.	Modify signal and extend 5-lane section of 185th south for 1500 feet. Add northbound and southbound protective/permissive (flashing yellow).		X		Near Term
77	209th Ave. and Farmington Rd.	Add second southbound left-turn lane, add southbound right-turn lane, and modify signal.			X	Near Term
78	198th Ave. and Kinnaman Rd. (North & South)	Realign and/or Signalize offset intersections.			X	Near Term
80	Brookwood Ave. and Witch Hazel Rd.	Intersection improvements and/or access management		X		Near Term
81	SW 198th Ave.	Widen to five lanes from TV Hwy to SW Alexander St.			X	Near Term
82	River Rd. and Minter Bridge Rd.	Add northbound right-turn lane.	X			Near Term
83	229th Ave.	Widen to include bike lanes and sidewalks from McInnis Ln. to Alexander St.			X	Near Term

COLOR KEY
MULTI-MODAL
BIKE
PEDESTRIAN
BIKE/PEDESTRIAN
TRANSIT
MOTOR VEHICLE/FREIGHT

Table 2: Recommended Focus Area Plan Near Term (0-15 years) Actions

RTP/Map Project Number	Location	Proposed Project	Base Case Improvement	Base Case Mitigation	South Hillsboro Mitigation	Implementation
10553	209th Ave. Improvements (TV Hwy to Farmington Rd.)	Widen and realign to three lanes with bike lanes and sidewalks. RTP 10553	X			Near Term
10560	Farmington Rd. (170th Ave. to 185th Ave.)	Widen roadway to five lanes with bike lanes and sidewalks. RTP 10560	X			Near Term
10574	Farmington Rd. (185th Ave. to 198th Ave.)	Widen from two to three lanes with bike lanes and sidewalks. RTP 10574	X			Near Term
10582	185th Ave. Improvements (TV Hwy to Farmington Rd.)	Widen to five lanes with bike lanes and sidewalks. Local RTP 10582	X			Near Term
10586	198th Ave. Improvements (TV Hwy to Baseline Rd.)	Widen to three lanes with bike lanes and sidewalks. Local RTP 10586	X			Near Term
10587	Cornelius Pass Rd. (Frances St. to TV Hwy)	Widen to five lanes with bike lanes and sidewalks. RTP 10587	X			Near Term
10593	Kinnaman Rd. (Farmington Rd. to 209th Ave.)	Widen to three lanes with bike lanes and sidewalks. RTP 10593	X			Near Term
10604	185th Ave. (Baseline Rd. to Hwy 26)	Install integrated surveillance and management equipment. RTP 10604	X			Near Term
10811	Beaverton Creek Trail (Regional) between SW 194th Ave. and Fanno Creek Trail	Design and construct a regional trail multi-use segment in a utility corridor, 10'-12' wide paved. RTP 10811	X			Near Term
10818	231st Ave./Century Blvd. (Baseline Rd. to Lois Rd.)	Build bridge and three lanes with bike lanes and sidewalk. RTP 10818	X			Near Term
10819	231st Ave./Century Blvd. (Baseline Rd. to Cornell Rd.)	Widen to three lanes with bike lanes and sidewalks. RTP 10819	X			Near Term
10820	Brookwood/247th Ave.(Alexander St. to South UGB)	Widen two lanes with on-street parking and sidewalks (Alexander St. to Davis Rd.); widen to three lanes with bike lanes and sidewalks (Davis Rd. to South UGB). RTP 10820	X			Near Term

COLOR KEY
MULTI-MODAL
BIKE
PEDESTRIAN
BIKE/PEDESTRIAN
TRANSIT
MOTOR VEHICLE/FREIGHT

Table 2: Recommended Focus Area Plan Near Term (0-15 years) Actions

RTP/Map Project Number	Location	Proposed Project	Base Case Improvement	Base Case Mitigation	South Hillsboro Mitigation	Implementation
10830	Johnson (Cornelius Pass to Century Blvd)	Widen to three lanes with bike lanes and sidewalks. RTP 10830	X			Near Term
10838	Davis Rd. (Brookwood to Century Blvd.)	Extend three-lane road with bike lanes/sidewalks. RTP 10838	X			Near Term
10839	Century Blvd. (Alexander St. to South UGB)	Extend three-lane road with bike lanes/sidewalks from Alexander St. to South UGB. RTP 10839	X			Near Term
10844	Cornelius Pass Rd. (TV Hwy to Rosa Rd. Extension)	Extend as a five-lane facility with bike lanes/sidewalks. Add turn lanes at TV Hwy. Local RTP 10844			X	Near Term
10850	Beaverton Creek Trail, Bronson Creek Trail	Construct bike/ped trail between Baseline Rd, 185th Ave. and Rock Creek Trail. RTP 10850	X			Near Term
10851	Rock Creek Trail	Construct bike/ped trail between River Rd. and Orchard Park (east of Cornelius Pass Rd.) RTP 10851	X			Near Term
11136	209th Ave. and TV Hwy Intersection	Modify RTP 11136, widen and adjust grade for northbound approach. Modify northbound lane configuration from RTP dual left-turn lanes and shared through/right-turn lane to a left-turn lane, through lane, and right-turn lane. Modify rail crossing and add second southbound lane.			X	Near Term
11137	TV Hwy/Century Blvd. Intersection	Add second southbound lane, add northbound through lane, widen rail crossing, add off-road bike lanes on Century Blvd. from TV Hwy to Alexander St. RTP 11137			X	Near Term
11142	37th Ave. (Main St. and Brodgden Ave.)	Widen to provide sidewalks and Bikeway Network signage access to LRT and fairgrounds. RTP 11142	X			Near Term
11152	Cedar St. (32nd Ave. to Brookwood Ave.)	Construct sidewalks. RTP 11152	X			Near Term
11153	Golden Rd. (Brookwood Ave. to Imlay Ave.)	Widen to provide bike lanes and sidewalks. RTP 11153	X			Near Term
11155	Drake St. (Imlay Ave. to 67th Ave.)	Widen to provide two or three lanes with bike lanes and sidewalks. RTP 11155	X			Near Term
11156	Drake St. (Brookwood Ave. to Imlay Ave.)	Widen to provide two or three lanes with bike lanes and sidewalks. RTP 11156	X			Near Term

COLOR KEY
MULTI-MODAL
BIKE
PEDESTRIAN
BIKE/PEDESTRIAN
TRANSIT
MOTOR VEHICLE/FREIGHT

Table 2: Recommended Focus Area Plan Near Term (0-15 years) Actions

RTP/Map Project Number	Location	Proposed Project	Base Case Improvement	Base Case Mitigation	South Hillsboro Mitigation	Implementation
11157	Imlay Ave. (TV Hwy to Lois St.)	Widen to provide bike lanes and sidewalks. RTP 11157	X			Near Term
11158	206th Ave. (Baseline Rd. to Rock Rd.)	Widen to provide bike lanes and sidewalks. RTP 11158	X			Near Term
11159	Alexander St. (Brookwood (247th Ave.) to 56th Ct.)	Widen to provide bike lanes and sidewalks. RTP 11159	X			Near Term
11160	Witch Hazel Rd. (River Rd. to Brookwood [247th Ave.])	Widen to provide sidewalks. RTP 11160	X			Near Term
11161	Rood Bridge Rd. (River Rd. to South UGB)	Widen to provide bike lanes and sidewalks. RTP 11161	X			Near Term
11272	Kinnaman Rd. Extension (209th Ave. to Century Blvd. Extension)	Construct three lanes with bike lanes and sidewalks. Local RTP 11272			X	Near Term
11273	Alexander St. Extension (209th Ave. to 229th Ave. at Blanton St.)	Construct three lanes with bike lanes and sidewalks. Local RTP 11273			X	Near Term
11274	Century Blvd. Extension (Area 71 UGB to 229th Ave.)	Construct three lanes with bike lanes and sidewalks. Local RTP 11274			X	Near Term
11284	Farmington Rd. (185th Ave. to 198th Ave.)	Widen to five lanes with bike lanes and sidewalks. Local RTP 11284		X		Near Term
11285	Farmington Rd. (198th Ave. to 209th Ave.)	Widen to five lanes with bike lanes and sidewalks. Local RTP 11285			X	Near Term
Not Mapped	TVCP Project Area	Add directional wayfinding signs.	X			Near Term
Not Mapped	TVCP Project Area	Support and promote employer incentive programs to reduce driving.	X			Near Term
Not Mapped	TV Hwy	Add street lighting on TV Hwy.	X			Near Term

COLOR KEY
MULTI-MODAL
BIKE
PEDESTRIAN
BIKE/PEDESTRIAN
TRANSIT
MOTOR VEHICLE/FREIGHT

Table 2: Recommended Focus Area Plan Near Term (0-15 years) Actions

RTP/Map Project Number	Location	Proposed Project	Base Case Improvement	Base Case Mitigation	South Hillsboro Mitigation	Implementation
Not Mapped	TV Hwy	Complete planning and conceptual plan for a multi-use path on south side of TV Hwy.	X			Near Term Planning, Longer Term Implementing
Not Mapped	TV Hwy	More detailed study to determine long-term transit solutions for TV Hwy.	X			Near Term
Not Mapped	TVCP Project Area	Improve existing #57 bus service.	X			Near Term
Not Mapped	TVCP Project Area	Public community rail safety education.	X			Near Term

The proposed actions described in this section will address critical existing needs, including multimodal system completeness and safety, and can reasonably be expected to be built in the next 15 years with a strong commitment from one or more of the partner agencies that have jurisdiction over subject transportation facilities.

FUTURE TRAFFIC VOLUME DEVELOPMENT

Future (year 2035 with a 2012 UGB build-out) traffic volume forecasts were developed for both with and without the planned South Hillsboro development using the regional travel demand forecasting model, which is based on long-range population and land use assumptions. These forecasts are consistent with the RTP. The travel demand forecasting process is described briefly below.

TRAVEL DEMAND FORECASTING MODELS

The future traffic volumes were developed from travel demand forecasting models. Travel demand models employ a market-based approach by considering both transportation supply and travel demand for producing traffic forecasts. The model relies on socioeconomic data (e.g., households and employment) to determine travel demand and system attributes (e.g., roadway capacity, speeds, and distances) to represent the transportation supply.

The regional travel demand model is based on locally established estimates of build-out land uses and densities in accordance with the local agency allocation of Metro land use totals. The land uses in the travel demand model include the expansions in Metro's 2011 growth management decision for North Hillsboro, South Hillsboro, South Cooper Mountain, and Roy Rogers West. These land uses were consolidated by the City of Hillsboro and run on the Washington County Westside Focus Area Travel Demand Model, which is a subarea model of the Metro State RTP model. The travel demand model was developed for a base year of 2010 and a forecast future year of 2035.

Future traffic forecasts for the Focus Plan Project Area intersections were developed from the 2010 and 2035 regional travel demand models and the 2011 existing traffic data. The process followed the procedures from ODOT's Analysis Procedures Manual (APM) for those intersections that exist today.[6] To convert travel demand model link (roadway) volumes to design hour intersection turning-movement volumes, the link-based post-processing method outlined in the APM was used.

The APM instructs the user to use the two most commonly used link-based methods for determining future traffic volumes—the growth method and the difference method. The growth method uses growth equations to calculate future design hour volumes. Caution must be taken with this method, because it may severely overestimate growth on links that have little volume in the base year and large volumes in the future year. The difference method should be used in areas where large differences in base and future model link volumes exist. The APM states that both methods should be compared in a spreadsheet, and areas with large percentage or absolute differences should use the difference method, while areas that have similar base and future model link volumes can use one or the other method, or an average of the two methods.

Therefore, when the difference between the growth and difference methods was large (greater than 10 percent), the difference method was used. When the difference between the two methods was small (less than 10 percent), the average of the growth and difference methods was used. This technique is

[6] *Analysis Procedures Manual, Oregon Department of Transportation, Transportation Development Division Planning Section, Transportation Planning and Analysis Unit, Salem, Oregon, April 2006, Section 4.64. Updated January 2011.*

consistent with the preferred method identified in the National Cooperative Highway Research Program (NCHRP) Report 255. The forecasted approach (link) volumes and existing turn-movement volumes were then input into a NCHRP Report 255 spreadsheet and, through an iterative process, future base case 2035 turning-movement volumes were calculated.

For intersections that do not exist today, the difference method was applied to intersection turn movements. For new approaches to existing intersections or at intersections that do not currently exist, turn movements from the travel demand models were used for determining future turn movement volumes.

FUTURE TRAFFIC VOLUMES – WITHOUT SOUTH HILLSBORO

Using the methodology described, 2035 AM and PM peak hour volumes were forecast without the planned development in South Hillsboro. **Figure 4** depicts 2035 AM and PM traffic volumes with 2012 UGB build-out without the South Hillsboro development at 24 intersections in and surrounding the South Hillsboro Community Plan Area. The FAP traffic analysis area is focused on intersections within the area bounded by Baseline Road to the north, Farmington Road to the south, River Road to the west, and 185th Avenue to the east. The FAP traffic analysis area is shown on **Figure 1**. The volume development worksheets are provided in **Appendix B**.

FUTURE TRAFFIC VOLUMES – WITH SOUTH HILLSBORO

Forecast traffic volumes with the planned South Hillsboro development were forecast using the same methodology as the without South Hillsboro volumes. **Figure 5** depicts 2035 AM and PM traffic volumes with 2012 UGB build-out with the planned South Hillsboro development at 35 intersections in and surrounding the South Hillsboro Community Plan Area. New intersections within the South Hillsboro Community Plan Area were added for the purpose of evaluating the transportation needs of the South Hillsboro development. The volume development worksheets are provided in **Appendix C**.

The street network assumes new roadways would be constructed within the South Hillsboro Community Plan Area. Cornelius Pass Road would be extended south to Rosedale Road, and the rail crossing at SW 229th Avenue would be closed pending approval from rail authorities. Century Boulevard/234th Avenue would be extended south and would tie into 229th Avenue just north of The Reserve golf course. Alexander Street would be extended from 229th Avenue to 209th Avenue at Blanton Street. Kinnaman Road would be extended from 209th Avenue to the extension of Century Boulevard/234th Avenue, and Rosa Road would be extended from 209th Avenue to 229th Avenue.

FUTURE TRAFFIC OPERATIONS ANALYSIS METHODOLOGY

OPERATIONAL CRITERIA

Transportation engineers have established various methods for measuring traffic operations of roadways and intersections. Most jurisdictions use either volume-to-capacity (v/c) ratio or level of service (LOS) to establish performance criteria. Both the LOS and v/c ratio concepts require consideration of factors that include traffic demand, capacity of the intersection or roadway, delay, frequency of interruptions in traffic flow, relative freedom for traffic maneuvers, driving comfort, convenience, and operating cost.

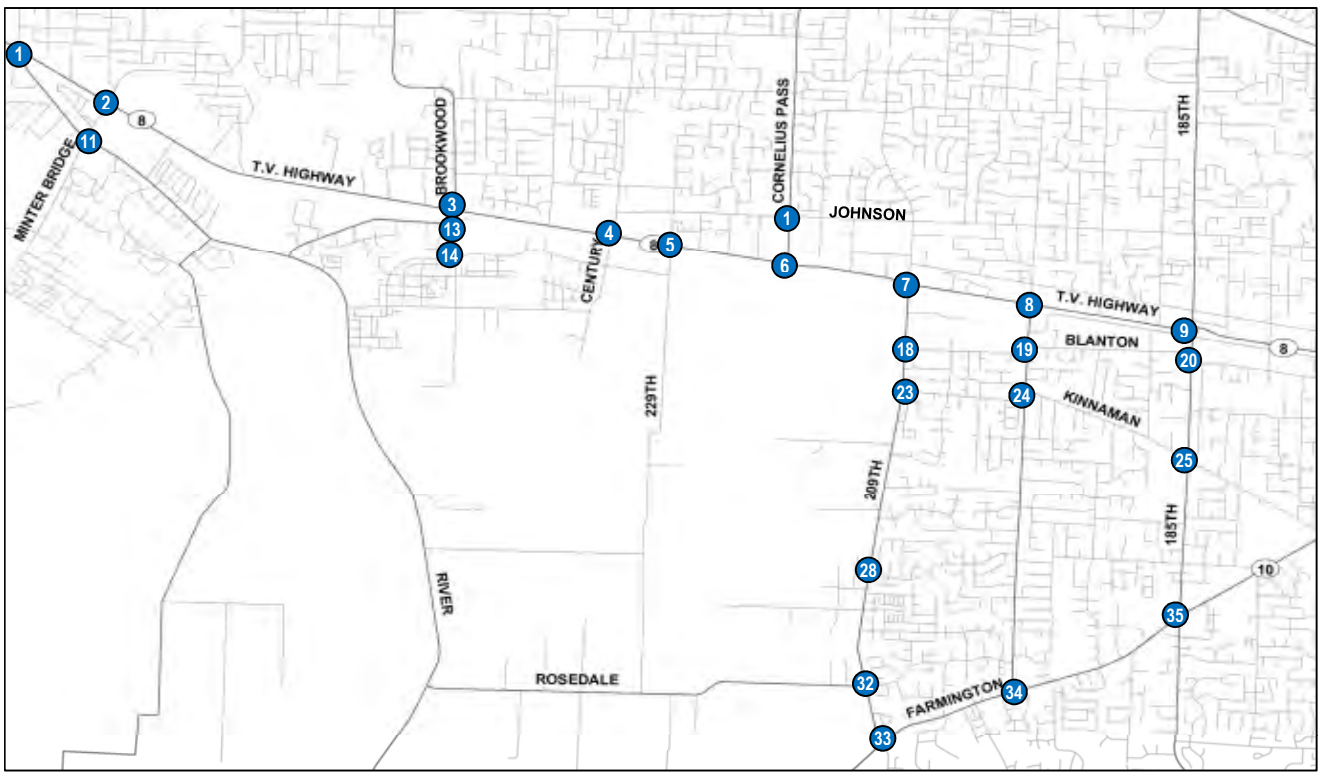

TV Hwy @ River
1
- 5 (25), 100 (125), 45 (55)
- 35 (85), 1185 (1055), 30 (40)
- 5 (15), 705 (1200), 275 (465)
- 315 (240), 255 (135), 35 (25)

TEV: 2990 (3465)

TV Hwy @ Minter Bridge/Cypress
2
- 50 (155), 210 (360), 105 (165)
- 80 (90), 900 (920), 100 (150)
- 60 (120), 620 (1220), 65 (135)
- 150 (155), 285 (265), 140 (160)

TEV: 2765 (3895)

TV Hwy @ Brookwood
3
- 130 (115), 185 (425), 200 (225)
- 165 (175), 1290 (1185), 160 (300)
- 75 (150), 1005 (1245), 70 (45)
- 100 (55), 345 (200), 270 (180)

TEV: 3995 (4300)

TV Hwy @ Century
4
- 105 (160), 65 (165), 115 (95)
- 25 (95), 1365 (1345), 75 (140)
- 275 (125), 1300 (1395), 65 (110)
- 75 (70), 60 (115), 155 (140)

TEV: 3680 (3955)

TV Hwy @ 67th/229th
5
- 35 (35), 25 (90), 80 (75)
- 110 (85), 1210 (1450), 75 (30)
- 50 (45), 1295 (1490), 60 (50)
- 120 (70), 130 (40), 105 (60)

TEV: 3295 (3520)

TV Hwy @ Cornelius Pass
6
- 190 (210), 530 (600)
- 690 (305), 1175 (1450)
- 180 (155), 1230 (1395)

TEV: 3995 (4115)

TV Hwy @ 209th
7
- 15 (90), 100 (270), 40 (40)
- 25 (65), 1295 (1560), 65 (145)
- 10 (20), 1465 (1410), 260 (540)
- 520 (150), 360 (225), 90 (90)

TEV: 4245 (4605)

TV Hwy @ 198th
8
- 45 (95), 165 (255), 210 (225)
- 120 (170), 1020 (1400), 175 (200)
- 35 (145), 1300 (1300), 165 (230)
- 275 (205), 440 (190), 330 (120)

TEV: 4280 (4535)

TV Hwy @ 185th
9
- 125 (160), 485 (710), 185 (210)
- 135 (140), 960 (1450), 120 (385)
- 175 (180), 1535 (1180), 170 (365)
- 325 (300), 1010 (610), 160 (150)

TEV: 5385 (5840)

Cornelius Pass @ Johnson
10
- 40 (45), 295 (585), 20 (145)
- 160 (40), 65 (65), 290 (120)
- 80 (75), 95 (65), 145 (150)
- 150 (85), 675 (220), 80 (165)

TEV: 2095 (1760)

River @ Minter Bridge
11
- 30 (85), 175 (315), 135 (275)
- 180 (200), 460 (310), 30 (50)
- 40 (145), 230 (560), 165 (150)
- 145 (60), 360 (290), 50 (35)

TEV: 2000 (2475)

River @ Davis
12
Intersection not analyzed in this scenario

Witch Hazel @ Brookwood
13
- 260 (315), 150 (450), 5 (5)
- 5 (5), 5 (5), 5 (5)
- 325 (225), 5 (5), 15 (15)
- 10 (15), 385 (205), 5 (5)

TEV: 1175 (1255)

Alexander @ Brookwood
14
- 30 (105), 150 (250), 80 (90)
- 35 (100), 15 (40), 10 (25)
- 175 (35), 90 (30), 5 (5)
- 5 (5), 200 (85), 45 (35)

TEV: 840 (805)

Alexander @ Century
15
Intersection not analyzed in this scenario

Alexander @ 229th
16
Intersection not analyzed in this scenario

Alexander @ Cornelius Pass
17
Intersection not analyzed in this scenario

Blanton @ 209th
18
- 390 (920), 35 (80)
- 140 (40), 10 (30)
- 830 (465), 30 (20)

TEV: 1435 (1555)

Blanton (North) @ 198th
19-N
- 275 (510), 280 (215)
- 300 (215), 65 (200)
- 740 (290), 95 (75)

TEV: 1755 (1505)

Blanton (South) @ 198th
19-S
- 190 (235), 150 (475)
- 200 (130), 150 (200)
- 160 (150), 635 (235)

TEV: 1485 (1425)

Blanton (North) @ 185th
20-N
- 100 (275), 675 (1185)
- 225 (195), 90 (160)
- 135 (85), 1270 (865)

TEV: 2495 (2765)

Blanton (South) @ 185th
20-S
- 625 (1170), 140 (175)
- 215 (210), 75 (160)
- 1190 (740), 155 (60)

TEV: 2400 (2515)

Kinnaman @ Century
21
Intersection not analyzed in this scenario

Kinnaman @ Cornelius Pass
22
Intersection not analyzed in this scenario

Kinnaman @ 209th
23
- 400 (845), 5 (105)
- 165 (30), 30 (10)
- 695 (455), 20 (10)

TEV: 1315 (1455)

Kinnaman (North) @ 198th
24-N
- 185 (455), 145 (270)
- 200 (170), 45 (50)
- 625 (305), 145 (90)

TEV: 1345 (1340)

Kinnaman (South) @ 198th
24-S
- 50 (130), 180 (375)
- 170 (130), 50 (20)
- 100 (25), 600 (265)

TEV: 1150 (945)

Kinnaman @ 185th
25
- 125 (60), 315 (950), 135 (280)
- 285 (165), 300 (255), 115 (105)
- 175 (115), 345 (280), 65 (160)
- 135 (80), 850 (590), 70 (45)

TEV: 2915 (3085)

Rosa @ 229th
26
Intersection not analyzed in this scenario

Rosa @ Cornelius Pass
27
Intersection not analyzed in this scenario

Rosa @ 209th
28
- 360 (655), 70 (200)
- 185 (70), 60 (10)
- 530 (445), 10 (40)

TEV: 1215 (1420)

River @ Rosedale
29
Intersection not analyzed in this scenario

Rosedale @ 229th
30
Intersection not analyzed in this scenario

Rosedale @ Cornelius Pass
31
Intersection not analyzed in this scenario

Rosedale @ 209th
32
- 125 (40), 280 (625), 15 (20)
- 15 (15), 15 (20), 5 (5)
- 20 (60), 10 (25), 95 (375)
- 340 (180), 520 (465), 5 (30)

TEV: 1445 (1860)

Farmington @ 209th
33
- 100 (210), 120 (525), 160 (270)
- 245 (335), 240 (475), 25 (50)
- 115 (155), 375 (400), 10 (20)
- 25 (5), 505 (185), 150 (65)

TEV: 2070 (2695)

Farmington @ 198th
34
- 95 (110), 5 (5), 250 (210)
- 250 (365), 490 (870), 5 (5)
- 205 (140), 640 (660), 5 (5)
- 5 (5), 5 (5), 5 (5)

TEV: 1960 (2385)

Farmington @ 185th
35
- 125 (335), 210 (695), 130 (180)
- 95 (110), 450 (1000), 45 (150)
- 270 (155), 775 (605), 120 (170)
- 180 (230), 680 (365), 130 (65)

TEV: 3210 (4060)

Legend

Lane Configuration

123 Peak Hour Volume

AM (PM)

TEV: Total Entering Volume

Figure 4

Traffic Volumes
2035 with 2012 UGB Build-out
Without South Hillsboro

South Hillsboro Focus Area Plan

DRAFT -
FINAL
3-26-2013

Hillsboro OREGON

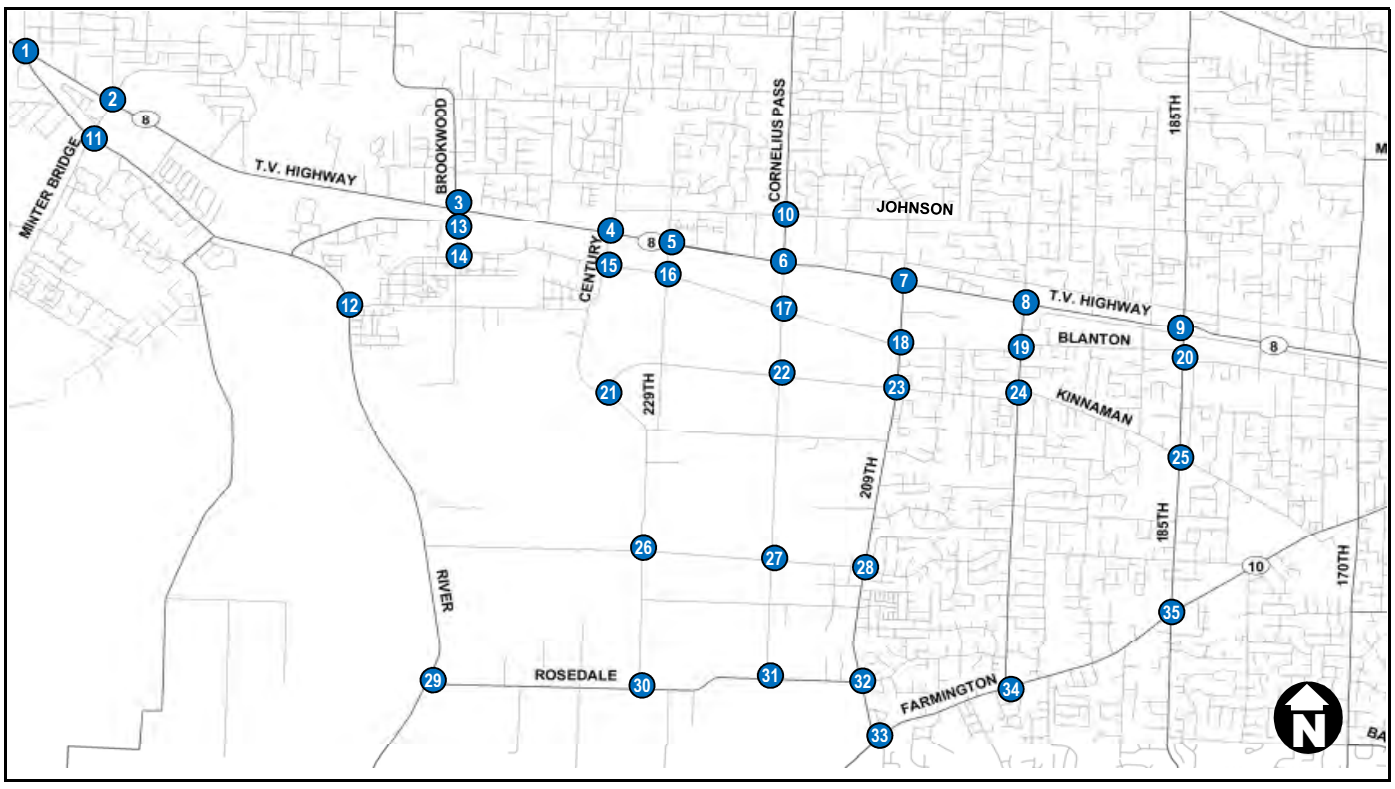

TV Hwy @ River — 1
5 (25) / 70 (170) / 60 (95)
45 (110) / 1355 (1130) / 115 (65)
5 (20) / 905 (1250) / 250 (505)
405 (240) / 95 (140) / 155 (35)
TEV: 3465 (3785)

TV Hwy @ Minter Bridge/Cypress — 2
50 (155) / 210 (360) / 105 (165)
65 (90) / 1295 (920) / 115 (150)
120 (120) / 820 (1220) / 65 (135)
150 (155) / 315 (265) / 145 (160)
TEV: 3455 (3895)

TV Hwy @ Brookwood — 3
160 (115) / 195 (510) / 200 (165)
165 (175) / 1400 (1185) / 160 (350)
80 (205) / 1005 (1455) / 85 (230)
220 (75) / 450 (235) / 345 (170)
TEV: 4465 (4870)

TV Hwy @ Century — 4
180 (225) / 140 (315) / 30 (25)
25 (120) / 1310 (1330) / 60 (170)
275 (165) / 1230 (1395) / 165 (270)
315 (125) / 285 (180) / 400 (170)
TEV: 4415 (4490)

TV Hwy @ 67th/229th — 5
35 (95) / 105 (200)
110 (85) / 1240 (1540)
60 (50) / 1425 (1575)
TEV: 2975 (3545)

TV Hwy @ Cornelius Pass — 6
200 (150) / 300 (1145) / 310 (400)
360 (255) / 990 (1345) / 270 (340)
160 (165) / 1230 (1020) / 125 (590)
200 (230) / 990 (435) / 300 (230)
TEV: 5435 (6305)

TV Hwy @ 209th — 7
15 (90) / 100 (440) / 55 (90)
50 (90) / 1295 (1630) / 155 (260)
10 (20) / 1550 (1410) / 265 (360)
225 (150) / 450 (230) / 165 (165)
TEV: 4335 (4935)

TV Hwy @ 198th — 8
50 (120) / 170 (335) / 235 (285)
150 (185) / 1050 (1545) / 175 (200)
50 (150) / 1490 (1330) / 165 (230)
285 (205) / 515 (190) / 330 (120)
TEV: 4665 (4895)

TV Hwy @ 185th — 9
135 (175) / 485 (800) / 185 (210)
135 (140) / 970 (1450) / 120 (400)
210 (190) / 1560 (1200) / 170 (370)
365 (320) / 1050 (610) / 205 (150)
TEV: 5590 (6015)

Cornelius Pass @ Johnson — 10
40 (45) / 295 (1180) / 40 (145)
160 (50) / 65 (65) / 290 (180)
80 (75) / 150 (65) / 170 (260)
165 (85) / 1070 (465) / 220 (195)
TEV: 2745 (2810)

River @ Minter Bridge — 11
30 (85) / 225 (315) / 135 (290)
200 (200) / 525 (310) / 65 (50)
40 (145) / 230 (550) / 200 (140)
155 (70) / 375 (300) / 70 (50)
TEV: 2250 (2505)

River @ Davis — 12
210 (630) / 120 (180)
235 (55) / 155 (250)
620 (365) / 225 (220)
TEV: 1565 (1700)

Witch Hazel @ Brookwood — 13
140 (340) / 300 (750)
65 (90)
230 (250)
950 (480) / 15 (60)
TEV: 1700 (1970)

Alexander @ Brookwood — 14
35 (230) / 200 (300) / 110 (220)
225 (115) / 25 (45) / 10 (10)
210 (55) / 95 (45) / 5 (10)
5 (10) / 345 (115) / 45 (30)
TEV: 1310 (1185)

Alexander @ Century — 15
75 (120) / 170 (475) / 120 (205)
425 (210) / 35 (30) / 15 (45)
150 (70) / 25 (195) / 10 (65)
130 (10) / 425 (200) / 30 (50)
TEV: 1610 (1675)

Alexander @ 229th — 16
5 (5) / 5 (5) / 5 (5)
5 (5) / 405 (250) / 30 (105)
5 (5) / 135 (495) / 65 (55)
125 (45) / 5 (5) / 10 (35)
TEV: 800 (1015)

Alexander @ Cornelius Pass — 17
240 (295) / 280 (1435) / 175 (345)
155 (195) / 220 (250) / 5 (80)
240 (295) / 85 (285) / 5 (50)
50 (10) / 1130 (375) / 40 (10)
TEV: 2625 (3625)

Blanton @ 209th — 18
90 (170) / 420 (800) / 40 (110)
105 (35) / 80 (250) / 60 (115)
250 (160) / 200 (105) / 60 (175)
185 (100) / 600 (465) / 140 (65)
TEV: 2230 (2550)

Blanton (North) @ 198th — 19-N
135 (90) / 140 (445) / 280 (215)
300 (225) / 60 (205) / 50 (30)
235 (5) / 195 (75) / 150 (200)
160 (150) / 590 (250) / 20 (10)
TEV: 2315 (1900)

Blanton (South) @ 198th — 19-S
Intersection Realigned with Blanton North (19-N). Final alignment of combined intersection to be determined.

Blanton (North) @ 185th — 20-N
Intersection Realigned with Blanton South (20-S). Final alignment of combined intersection to be determined.

Blanton (South) @ 185th — 20-S
100 (325) / 600 (1120) / 75 (125)
195 (190) / 35 (165) / 75 (195)
260 (195) / 90 (155) / 40 (230)
140 (70) / 1165 (705) / 220 (75)
TEV: 2995 (3550)

Kinnaman @ Century — 21
150 (580) / 10 (105)
45 (25) / 30 (120)
540 (250) / 95 (55)
TEV: 870 (1135)

Kinnaman @ Cornelius Pass — 22
20 (85) / 175 (1010) / 40 (280)
185 (80) / 160 (105) / 5 (60)
65 (50) / 40 (200) / 25 (50)
35 (45) / 1075 (255) / 20 (30)
TEV: 1845 (2250)

Kinnaman @ 209th — 23
50 (165) / 470 (735) / 35 (150)
135 (55) / 135 (135) / 70 (70)
200 (75) / 50 (200) / 40 (150)
185 (70) / 575 (465) / 165 (45)
TEV: 2110 (2315)

Kinnaman (North) @ 198th — 24-N
225 (465) / 145 (290)
275 (225) / 265 (190)
520 (290) / 295 (215)
TEV: 1725 (1675)

Kinnaman (South) @ 198th — 24-S
225 (210) / 265 (445)
345 (240) / 75 (25)
110 (30) / 470 (265)
TEV: 1490 (1215)

Kinnaman @ 185th — 25
145 (90) / 315 (1045) / 135 (315)
235 (165) / 435 (350) / 125 (115)
175 (125) / 430 (375) / 90 (200)
200 (100) / 960 (590) / 80 (55)
TEV: 3325 (3525)

Rosa @ 229th — 26
45 (185) / 75 (175)
275 (125) / 10 (10)
105 (85) / 35 (10)
TEV: 545 (590)

Rosa @ Cornelius Pass — 27
110 (260) / 55 (525) / 70 (265)
245 (105) / 140 (90) / 5 (5)
190 (120) / 90 (100) / 5 (5)
10 (5) / 500 (115) / 5 (5)
TEV: 1425 (1600)

Rosa @ 209th — 28
80 (180) / 430 (685) / 25 (70)
80 (20) / 75 (140) / 45 (10)
170 (85) / 175 (125) / 60 (70)
70 (30) / 570 (405) / 15 (30)
TEV: 1795 (1850)

River @ Rosedale — 29
285 (580) / 60 (270)
330 (160) / 95 (95)
495 (385) / 45 (140)
TEV: 1310 (1630)

Rosedale @ 229th — 30
110 (25) / 25 (85)
105 (80) / 315 (190)
40 (35) / 130 (375)
TEV: 725 (790)

Rosedale @ Cornelius Pass — 31
10 (45) / 125 (425)
285 (135) / 320 (225)
50 (55) / 130 (365)
TEV: 920 (1250)

Rosedale @ 209th — 32
65 (25) / 485 (805) / 15 (20)
15 (25) / 15 (30) / 50 (55)
25 (65) / 10 (25) / 220 (615)
420 (295) / 665 (640) / 5 (10)
TEV: 1990 (2610)

Farmington @ 209th — 33
145 (310) / 220 (580) / 390 (585)
350 (465) / 310 (515) / 40 (50)
250 (235) / 415 (445) / 25 (20)
25 (15) / 445 (245) / 155 (75)
TEV: 2770 (3540)

Farmington @ 198th — 34
95 (110) / 5 (5) / 325 (270)
250 (315) / 530 (1125) / 5 (5)
205 (145) / 915 (960) / 5 (5)
5 (5) / 5 (5) / 5 (5)
TEV: 2350 (2955)

Farmington @ 185th — 35
150 (340) / 225 (695) / 130 (225)
115 (110) / 465 (1135) / 45 (160)
380 (210) / 1130 (755) / 150 (235)
205 (260) / 700 (365) / 330 (70)
TEV: 4025 (4560)

Legend

Lane Configuration

123 Peak Hour Volume

AM (PM)

TEV: Total Entering Volume

Intersection Volumes Shown

DRAFT -
FINAL
3-26-2013

Hillsboro OREGON

Figure 5

Traffic Volumes
2035 with 2012 UGB Build-out
With South Hillsboro

South Hillsboro Focus Area Plan

VOLUME-TO-CAPACITY (V/C) RATIO

A comparison of traffic volume demand to intersection capacity is one method of evaluating how well an intersection is operating. This comparison is presented as a v/c ratio. A v/c ratio of less than 1.00 indicates that the volume is less than capacity. When the v/c ratio is closer to zero, traffic conditions are generally good, with little congestion and low delays for most intersection movements. As the v/c ratio approaches 1.00, traffic becomes more congested and unstable, with longer delays.

LEVEL OF SERVICE (LOS)

Level of service is also a widely recognized and accepted measure and descriptor of traffic operations. At both STOP-controlled and signalized intersections, LOS is a function of control delay, which includes initial deceleration delay, queue move-up time, stopped delay, and final acceleration delay. Six standards have been established, ranging from LOS A, where there is little or no delay, to LOS F, where there is delay of more than 50 seconds at unsignalized intersections, or more than 80 seconds at signalized intersections.

It should be noted that, although delays can sometimes be long for some movements at a STOP-controlled intersection, the v/c ratio may indicate that there is adequate capacity to process the demand for that movement. Similarly, at signalized intersections, some movements, particularly side street approaches or left turns onto side streets, may experience longer delays because they receive only a small portion of the green time during a signal cycle, but their v/c ratio may be relatively low. For these reasons, it is important to examine both v/c ratio and LOS when evaluating overall intersection operations. Both are reported in the following section.

OPERATIONAL STANDARDS

The Oregon Highway Plan (OHP) has established several policies that provide general objectives and approaches for maintaining highway mobility. Of these policies, the Highway Mobility Targets (Policy 1F) establish desirable v/c ratios for peak hour operating conditions for all highways in Oregon based on the location and classification of the highway segment being examined. The OHP policy also specifies that the v/c ratio targets be maintained for ODOT facilities through a 20-year horizon. However, recent guidance suggests that the Portland Metropolitan Area has a large amount of urban development that results in high levels of congestion. Many areas within this region are already exceeding current v/c thresholds, with many locations on the State Highway System operating over capacity during peak hours. In many cases these desired under-capacity conditions, promoted by v/c ratio standards, cannot reasonably be met due to land use, environmental, and financial constraints. Because of this, alternative performance targets could be considered in addition to or as an alternative to the v/c ratio standards. These alternative performance targets would provide more comprehensive or alternative means for evaluating transportation system performance.

Hillsboro, Washington County, and Metro also have their own adopted performance standards. Hillsboro uses LOS as a performance standard, while Washington County and Metro use v/c ratio standards. For the future traffic analysis, **Table 3** provides a summary of applicable operational standards for each jurisdiction. These standards are outlined in their corresponding Transportation System Plans (TSPs) and master plans.

Table 3: Summary of Operational Thresholds

JURISDICTION	DESIRED MOBILITY THRESHOLD
ODOT[1]	VARIES
TV HWY	0.99 V/C
FARMINGTON ROAD	0.99 V/C
CITY OF HILLSBORO[2]	LOS D (0.99 V/C by Movement)
WASHINGTON COUNTY[3]	0.99 V/C
METRO[4]	0.99 V/C (1ST Hour)

1. Existing and base case requirements outlined in 1999 OHP and based on v/c.
2. City of Hillsboro operating preference outlined in the Hillsboro Comprehensive Plan, Section 13.D. Future code revision will utilize 0.99 V/C by movement.
3. Washington County operating standards outlined in Washington County Comprehensive Transportation Plan.
4. Metro interim regional mobility policy standards as outlined in the 2035 RTP, Table 2.4.

PROCEDURES

All operations were evaluated using the methodology outlined in the *2000 Highway Capacity Manual* (HCM) along with the procedures outlined in ODOT's APM. The Synchro analysis software was selected to perform the intersection analysis, since it can provide the v/c ratio and LOS output of the HCM.

Synchro is a macroscopic model similar to the Highway Capacity Software (HCS), and like the HCS, is based on the 2000 HCM. The Synchro model explicitly evaluates traffic operations under coordinated and uncoordinated systems of signalized and unsignalized intersections. The v/c ratios and LOS presented in this report are based on the Synchro model output. Simulation analysis using the SimTraffic software tool was used at key locations to help identify additional needs where queuing was expected.

INTERSECTION OPERATIONS IMPROVEMENTS – WITHOUT SOUTH HILLSBORO

This section summarizes the results of the traffic operations analysis for the 2035 without South Hillsboro development. Twenty-four intersections in and surrounding the South Hillsboro Community Plan Area were evaluated. The street network for the Base Case includes projects identified and listed in **Table 2**.

Table 4 presents the critical movement v/c ratios and LOS performance for intersections that fail to meet applicable standards in the Base Case scenario. The Base Case findings reflect the current signal timing plans implemented along TV Hwy, unless the intersection geometry changed from existing conditions, in which case the timing was optimized (per ODOT's APM methodology). **Figures 6** and **7** show the v/c ratio and LOS for the AM and PM peak hour at all 24 Base Case intersections by lane group, and the critical v/c ratio and LOS for the intersection. Detailed Base Case analysis worksheets are presented in **Appendix E**.

In the 2035 with 2012 UGB Build-out without South Hillsboro Base Case development, eight of the 24 intersections are expected to fail to meet the applicable mobility thresholds in either the AM and/or PM peak hour. **Table 4** lists the possible improvements for each of these intersections for them to meet the applicable operating standard. Improvements that cause widening to the approaches crossing the rail line will require additional coordination with ODOT Rail Division and may result in changes to the intersection lane configurations. In addition, the upcoming South Hillsboro Master Plan may further refine the identified transportation needs after further study of the area. **Figures 8** and **9** show the v/c ratio and LOS for the AM and PM peak hour at all 24 intersections, with the possible improvements

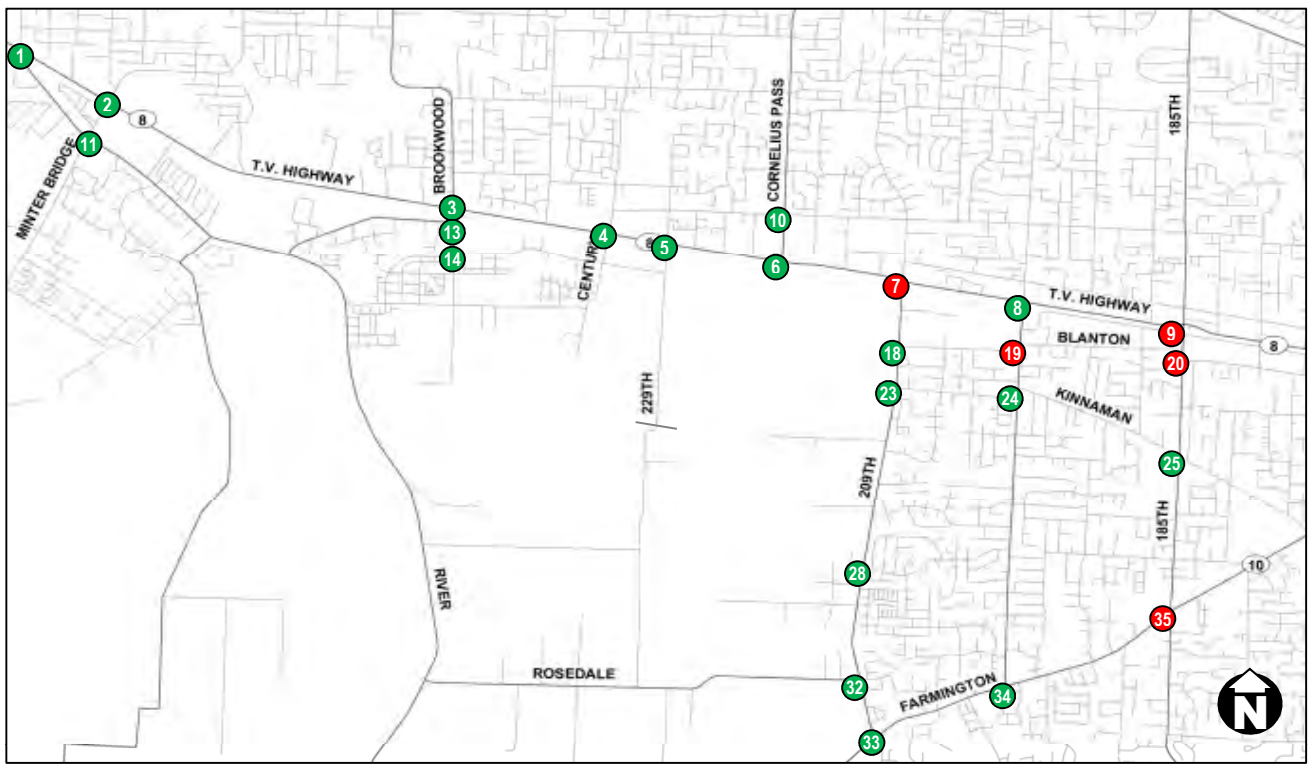

TV Hwy @ River — 1
- D (0.27), E (0.63)
- B (0.60), A (0.09)
- B (0.04), B (0.53)
- D (0.71), D (0.67)

V/C: 0.63 | LOS: C

TV Hwy @ Minter Bridge/Cypress — 2
- C (0.03), D (0.73), D (0.38)
- B (0.05), B (0.53), D (0.45)
- E (0.62), C (0.49)
- D (0.76), D (0.09)

V/C: 0.59 | LOS: C

TV Hwy @ Brookwood — 3
- D (0.36), F (0.95)
- B (0.10), B (0.68), D (0.78)
- E (0.59), C (0.58), B (0.04)
- E (0.61), D (0.66), C (0.46)

V/C: 0.73 | LOS: C

TV Hwy @ Century — 4
- D (0.44), E (0.72)
- C (0.80), E (0.56)
- F (1.29), B (0.69), A (0.06)
- E (0.60), D (0.62)

V/C: 0.83 | LOS: D

TV Hwy @ 67th/229th — 5
- D (0.02), F (1.04)
- A (0.09), B (0.48), E (0.58)
- D (0.47), B (0.55)
- F (>2.0)

V/C: 0.75 | LOS: E

TV Hwy @ Cornelius Pass — 6
- C (0.27), D (0.82)
- B (0.91)
- E (0.87), A (0.46)

V/C: 0.89 | LOS: C

TV Hwy @ 209th — 7
- D (0.32), F (0.85)
- B (0.02), C (0.68), E (0.45)
- F (0.91), F (1.08)
- F (>2.0), E (0.89)

V/C: 1.16 | LOS: F

TV Hwy @ 198th — 8
- E (0.75), D (0.64)
- B (0.11), C (0.58), E (0.80)
- F (0.47), B (0.87), A (0.14)
- E (0.86), F (1.59), D (0.61)

V/C: 0.98 | LOS: E

TV Hwy @ 185th — 9
- D (0.26), E (0.83), F (1.12)
- D (0.78), F (1.00)
- E (0.83), F (1.07)
- F (0.94), F (1.07), C (0.28)

V/C: 1.07 | LOS: F

Cornelius Pass @ Johnson — 10
- C (0.42), C (0.12)
- B (0.24), B (0.53)
- C (0.24), C (0.58)
- B (0.35), C (0.65)

V/C: 0.57 | LOS: C

River @ Minter Bridge — 11
- C (0.47), D (0.58)
- D (0.91), D (0.32)
- D (0.43), B (0.55)
- D (0.59), D (0.79), C (0.03)

V/C: 0.75 | LOS: C

River @ Davis — 12
Intersection not analyzed in this scenario

Witch Hazel @ Brookwood — 13
- -- (0.15), -- (0.09), A (0.01)
- B (0.04)
- E (0.77), B (0.03)
- A (0.01), -- (0.23)

V/C: 0.77 | LOS: E

Alexander @ Brookwood — 14
- A (0.24)
- A (0.08)
- A (0.33)
- A (0.32)

V/C: 0.33 | LOS: A

Alexander @ Century — 15
Intersection not analyzed in this scenario

Alexander @ 229th — 16
Intersection not analyzed in this scenario

Alexander @ Cornelius Pass — 17
Intersection not analyzed in this scenario

Blanton @ 209th — 18
- -- (0.23), A (0.04)
- C (0.44)
- -- (0.51)

V/C: 0.44 | LOS: C

Blanton (North) @ 198th — 19-N
- -- (0.16), B (0.35)
- F (1.65)
- -- (0.49)

V/C: 1.65 | LOS: F

Blanton (South) @ 198th — 19-S
- -- (0.11), -- (0.09)
- F (1.15)
- A (0.13), -- (0.37)

V/C: 1.15 | LOS: F

Blanton (North) @ 185th — 20-N
- -- (0.26)
- F (0.92)
- A (0.14), -- (0.37)

V/C: 0.92 | LOS: F

Blanton (South) @ 185th — 20-S
- -- (0.18), B (0.28)
- F (>2.0)
- -- (0.47)

V/C: >2.0 | LOS: F

Kinnaman @ Century — 21
Intersection not analyzed in this scenario

Kinnaman @ Cornelius Pass — 22
Intersection not analyzed in this scenario

Kinnaman @ 209th — 23
- -- (0.24), A (0.01)
- C (0.38), C (0.13)
- -- (0.42)

V/C: 0.38 | LOS: C

Kinnaman (North) @ 198th — 24-N
- -- (0.11), B (0.17)
- C (0.45), D (0.25)
- -- (0.45)

V/C: 0.45 | LOS: C

Kinnaman (South) @ 198th — 24-S
- -- (0.14)
- E (0.69), A (0.06)
- A (0.07), -- (0.35)

V/C: 0.69 | LOS: E

Kinnaman @ 185th — 25
- C (0.38), D (0.69)
- D (0.85), E (0.70)
- E (0.83), C (0.54)
- C (0.39), D (0.83)

V/C: 0.85 | LOS: D

Rosa @ 229th — 26
Intersection not analyzed in this scenario

Rosa @ Cornelius Pass — 27
Intersection not analyzed in this scenario

Rosa @ 209th — 28
- -- (0.21), A (0.07)
- C (0.47)
- -- (0.32)

V/C: 0.47 | LOS: C

River @ Rosedale — 29
Intersection not analyzed in this scenario

Rosedale @ 229th — 30
Intersection not analyzed in this scenario

Rosedale @ Cornelius Pass — 31
Intersection not analyzed in this scenario

Rosedale @ 209th — 32
- -- (0.24), A (0.01)
- C (0.16)
- C (0.36)
- A (0.29), -- (0.31)

V/C: 0.36 | LOS: C

Farmington @ 209th — 33
- B (0.22), E (0.77)
- C (0.15), D (0.60), D (0.35)
- D (0.64), D (0.74)
- D (0.35), D (0.86)

V/C: 0.78 | LOS: D

Farmington @ 198th — 34
- C (0.06), C (0.65)
- B (0.21), C (0.71), D (0.12)
- C (0.60), B (0.64)
- D (0.18)

V/C: 0.65 | LOS: C

Farmington @ 185th — 35
- C (0.08), C (0.34), F (1.23)
- C (0.06), E (0.93), E (0.47)
- F (1.05), F (1.19), C (0.11)
- E (0.69), F (1.06)

V/C: 1.13 | LOS: F

DRAFT - FINAL 3-26-2013

Legend

V/C: 0.01	LOS: A	Overall Intersection Operations [2]

A (0.01) — Lane Group LOS (V/C)
V/C: — Volume-to-Capacity Ratio
LOS: — Level of Service
-- — No LOS for free movement
Existing Lane Configuration
Base Case Lane Configuration

Signalized intersection
Roundabout
STOP-Controlled Approach
Intersection performance meets operational standard
Intersection performance fails operational standard

1. Operations based on average hour (PHF = 1.00)
2. Overall STOP-controlled intersection operations reported for worst STOP-controlled movement

Hillsboro OREGON

Figure 6

AM Movement Operations[1]
2035 with 2012 UGB Build-out
Without South Hillsboro -
Not Mitigated

South Hillsboro Focus Area Plan

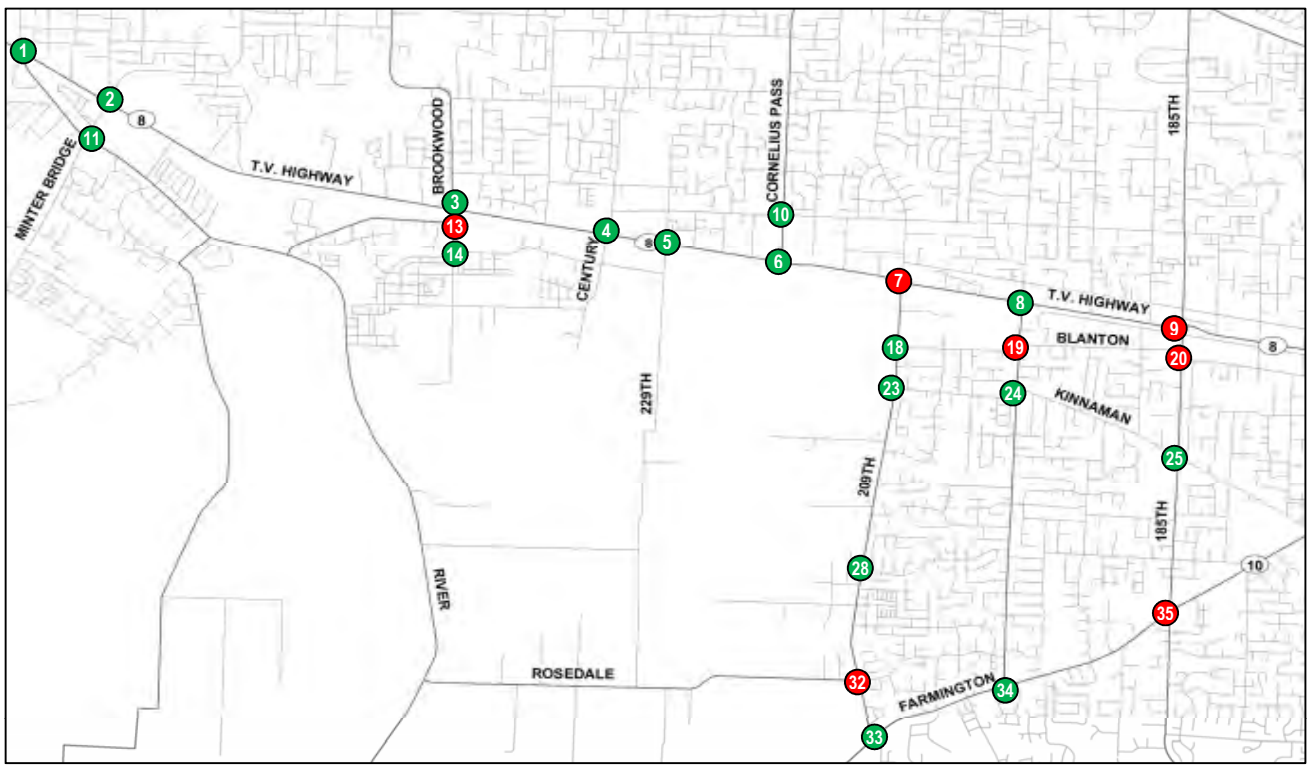

TV Hwy @ River — 1
NB: D (0.48), E (0.61)
SB: A (0.53), B (0.30)
EB: B (0.07), C (0.85)
WB: F (0.98), D (0.46)
V/C: 0.72 | LOS: C

TV Hwy @ Minter Bridge/Cypress — 2
NB: C (0.10), D (0.86), C (0.41)
SB: B (0.06), C (0.67), F (1.39)
EB: E (0.86), C (0.95)
WB: D (0.74), D (0.10)
V/C: 0.87 | LOS: D

TV Hwy @ Brookwood — 3
NB: D (0.74), E (0.78)
SB: B (0.11), B (0.66), F (1.03)
EB: E (0.75), C (0.78), B (0.03)
WB: E (0.50), D (0.54), D (0.33)
V/C: 0.78 | LOS: D

TV Hwy @ Century — 4
NB: E (0.84), E (0.66)
SB: C (0.83), F (0.85)
EB: E (0.71), C (0.80), B (0.10)
WB: E (0.63), D (0.69)
V/C: 0.79 | LOS: D

TV Hwy @ 67th/229th — 5
NB: D (0.02), F (0.98)
SB: A (0.07), B (0.57), E (0.30)
EB: D (0.44), A (0.60)
WB: F (1.36)
V/C: 0.70 | LOS: C

TV Hwy @ Cornelius Pass — 6
NB: C (0.35), E (0.86)
SB: B (0.84)
EB: E (0.78), A (0.53)
WB:
V/C: 0.84 | LOS: B

TV Hwy @ 209th — 7
NB: E (0.86), E (0.45)
SB: A (0.06), A (0.77), C (0.49)
EB: F (0.69), F (1.34)
WB: F (1.55), D (0.73)
V/C: 1.09 | LOS: F

TV Hwy @ 198th — 8
NB: F (1.17), E (0.76)
SB: C (0.19), D (0.94), F (0.99)
EB: E (0.67), B (0.79), A (0.18)
WB: E (0.83), E (0.76), D (0.07)
V/C: 0.95 | LOS: D

TV Hwy @ 185th — 9
NB: D (0.41), F (1.17), F (1.16)
SB: D (0.95), F (1.98)
EB: E (0.76), D (0.87)
WB: F (1.66), F (1.00), D (0.26)
V/C: 1.22 | LOS: F

Cornelius Pass @ Johnson — 10
NB: B (0.31), B (0.22)
SB: D (0.43), E (0.59)
EB: D (0.32), E (0.64)
WB: B (0.22), A (0.18)
V/C: 0.38 | LOS: C

River @ Minter Bridge — 11
NB: C (0.68), E (0.93)
SB: C (0.80), D (0.56)
EB: D (0.66), D (0.94)
WB: E (0.76), D (0.79), C (0.02)
V/C: 0.90 | LOS: D

River @ Davis — 12
Intersection not analyzed in this scenario

Witch Hazel @ Brookwood — 13
NB: -- (0.19), -- (0.26), F (0.07)
SB: F (>2.0)
EB: F (>2.0), F (0.85)
WB: A (0.02), -- (0.12)
V/C: >2.0 | LOS: F

Alexander @ Brookwood — 14
NB: A (0.42)
SB: A (0.17)
EB: A (0.09)
WB: A (0.13)
V/C: 0.42 | LOS: A

Alexander @ Century — 15
Intersection not analyzed in this scenario

Alexander @ 229th — 16
Intersection not analyzed in this scenario

Alexander @ Cornelius Pass — 17
Intersection not analyzed in this scenario

Blanton @ 209th — 18
NB: -- (0.54), A (0.07)
SB: D (0.33)
EB:
WB: -- (0.29)
V/C: 0.33 | LOS: D

Blanton (North) @ 198th — 19-N
NB: -- (0.30), A (0.18)
SB: F (1.67)
EB:
WB: -- (0.21)
V/C: 1.67 | LOS: F

Blanton (South) @ 198th — 19-S
NB: -- (0.14), -- (0.28)
SB:
EB: F (0.93)
WB: A (0.17), -- (0.14)
V/C: 0.93 | LOS: F

Blanton (North) @ 185th — 20-N
NB: -- (0.46)
SB:
EB: F (1.15)
WB: B (0.17), -- (0.25)
V/C: 1.15 | LOS: F

Blanton (South) @ 185th — 20-S
NB: -- (0.34), B (0.21)
SB: F (>2.0)
EB:
WB: -- (0.29)
V/C: >2.0 | LOS: F

Kinnaman @ Century — 21
Intersection not analyzed in this scenario

Kinnaman @ Cornelius Pass — 22
Intersection not analyzed in this scenario

Kinnaman @ 209th — 23
NB: -- (0.50), A (0.10)
SB: B (0.05), E (0.08)
EB:
WB: -- (0.27)
V/C: 0.08 | LOS: E

Kinnaman (North) @ 198th — 24-N
NB: -- (0.27), A (0.23)
SB: B (0.24), E (0.38)
EB:
WB: -- (0.23)
V/C: 0.38 | LOS: E

Kinnaman (South) @ 198th — 24-S
NB: -- (0.30)
SB:
EB: C (0.35), B (0.03)
WB: A (0.02), -- (0.16)
V/C: 0.35 | LOS: C

Kinnaman @ 185th — 25
NB: C (0.76), C (0.82)
SB: D (0.67), E (0.67)
EB: E (0.69), D (0.69)
WB: C (0.47), C (0.55)
V/C: 0.72 | LOS: C

Rosa @ 229th — 26
Intersection not analyzed in this scenario

Rosa @ Cornelius Pass — 27
Intersection not analyzed in this scenario

Rosa @ 209th — 28
NB: -- (0.39), A (0.18)
SB: B (0.16)
EB:
WB: -- (0.29)
V/C: 0.16 | LOS: B

River @ Rosedale — 29
Intersection not analyzed in this scenario

Rosedale @ 229th — 30
Intersection not analyzed in this scenario

Rosedale @ Cornelius Pass — 31
Intersection not analyzed in this scenario

Rosedale @ 209th — 32
NB: -- (0.39), A (0.02)
SB: F (0.70)
EB: F (1.17)
WB: A (0.19), -- (0.29)
V/C: 1.17 | LOS: F

Farmington @ 209th — 33
NB: D (0.93), D (0.75)
SB: C (0.34), D (0.86), E (0.53)
EB: E (0.78), C (0.64)
WB: D (0.11), D (0.51)
V/C: 0.89 | LOS: D

Farmington @ 198th — 34
NB: C (0.07), D (0.70)
SB: B (0.34), C (0.91), D (0.14)
EB: D (0.64), B (0.58)
WB: D (0.20)
V/C: 0.80 | LOS: C

Farmington @ 185th — 35
NB: C (0.39), F (1.05), E (0.76)
SB: C (0.14), F (1.62), E (0.83)
EB: F (1.15), F (1.06), C (0.13)
WB: F (1.09), D (0.70)
V/C: 1.23 | LOS: F

DRAFT - FINAL 3-26-2013

Legend

V/C: 0.01	LOS: A	Overall Intersection Operations [2]

A (0.01) — Lane Group LOS (V/C)
V/C: — Volume-to-Capacity Ratio
LOS: — Level of Service
-- — No LOS for free movement
Existing Lane Configuration
Base Case Lane Configuration

Signalized intersection
Roundabout
STOP-Controlled Approach
Intersection performance meets operational standard
Intersection performance fails operational standard

1. Operations based on average hour (PHF = 1.00)
2. Overall STOP-controlled intersection operations reported for worst STOP-controlled movement

Hillsboro OREGON

Figure 7

PM Movement Operations[1]
2035 with 2012 UGB Build-out
Without South Hillsboro -
Not Mitigated

South Hillsboro Focus Area Plan

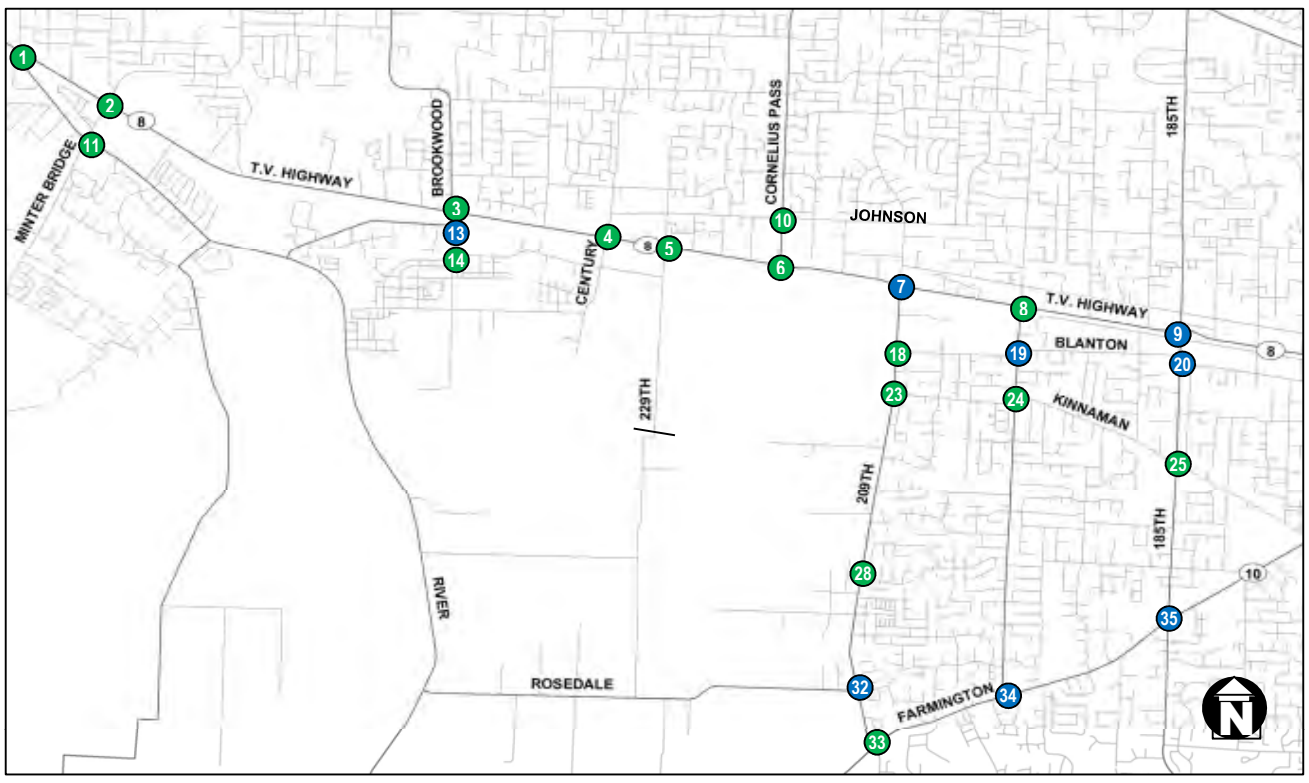

TV Hwy @ River — 1
D (0.27), E (0.63); B (0.60), A (0.09); B (0.04), B (0.53); D (0.71), D (0.67)
V/C: 0.63 | LOS: C

TV Hwy @ Minter — 2
C (0.03), D (0.73), D (0.38); B (0.05), B (0.53), D (0.45); E (0.62), C (0.49); D (0.76), D (0.09)
V/C: 0.59 | LOS: C

TV Hwy @ Brookwood — 3
D (0.37), F (0.95); B (0.10), B (0.68), D (0.78); E (0.59), C (0.58), B (0.04); E (0.68), D (0.65), C (0.46)
V/C: 0.71 | LOS: C

TV Hwy @ Century — 4
D (0.44), E (0.72); C (0.80), E (0.56); F (1.29), B (0.69), A (0.06); E (0.60), D (0.62)
V/C: 0.83 | LOS: D

TV Hwy @ 67th/229th — 5
D (0.02), F (1.04); A (0.09), B (0.48), E (0.58); D (0.47), B (0.55); F (>2.0)
V/C: 0.75 | LOS: E

TV Hwy @ Cornelius Pass — 6
C (0.27), D (0.82); B (0.91); E (0.87), A (0.46)
V/C: 0.89 | LOS: C

TV Hwy @ 209th — 7
D (0.32), D (0.32); B (0.02), C (0.69), E (0.49); F (0.91), D (0.90), C (0.20); F (1.27), E (0.88)
V/C: 0.99 | LOS: E

TV Hwy @ 198th — 8
E (0.76), F (0.93); B (0.12), C (0.61), E (0.82); F (0.65), C (0.95), A (0.16); D (0.70), E (0.96), D (0.45)
V/C: 0.93 | LOS: D

TV Hwy @ 185th* — 9
C (0.17), D (0.59), F (0.87); C (0.71), E (0.78); E (0.66), D (0.91), B (0.16); E (0.73), E (0.95), C (0.28)
V/C: 0.92 | LOS: D

Cornelius Pass @ Johnson — 10
C (0.42), C (0.12); B (0.24), B (0.53); C (0.24), C (0.58); B (0.35), C (0.65)
V/C: 0.57 | LOS: C

River @ Minter Bridge — 11
C (0.47), D (0.58); D (0.91), D (0.32); D (0.43), B (0.55); D (0.59), D (0.79), C (0.03)
V/C: 0.75 | LOS: C

River @ Davis — 12
Intersection not analyzed in this scenario

Witch Hazel @ Brookwood — 13
-- (0.15), -- (0.09); B (0.04); B (0.39); -- (0.43)
V/C: 0.39 | LOS: B

Alexander @ Brookwood — 14
A (0.54); A (0.11); B (0.46); B (0.45)
V/C: 0.54 | LOS: A

Alexander @ Century — 15
Intersection not analyzed in this scenario

Alexander @ 229th — 16
Intersection not analyzed in this scenario

Alexander @ Cornelius Pass — 17
Intersection not analyzed in this scenario

Blanton @ 209th — 18
-- (0.23), A (0.04); C (0.44); -- (0.51)
V/C: 0.44 | LOS: C

Blanton (North) @ 198th — 19-N
B (0.09), B (0.16), D (0.78); D (0.65), C (0.04); C (0.67), C (0.14); B (0.28), D (0.93)
V/C: 0.79 | LOS: D

Blanton (South) @ 198th — 19-S
Intersection realigned with Blanton North (19-N). Final alignment of combined intersection to be determined.

Blanton (North) @ 185th — 20-N
Intersectin realigned with Blanton North (20-S). Final alignment of combined intersection to be determined.

Blanton (South) @ 185th — 20-S
B (0.48), B (0.33); C (0.25), C (0.26); C (0.60), C (0.17); B (0.31), C (0.84)
V/C: 0.69 | LOS: C

Kinnaman @ Century — 21
Intersection not analyzed in this scenario

Kinnaman @ Cornelius Pass — 22
Intersection not analyzed in this scenario

Kinnaman @ 209th — 23
-- (0.24), A (0.01); C (0.38); C (0.13); -- (0.42)
V/C: 0.38 | LOS: C

Kinnaman (North) @ 198th — 24-N
-- (0.11), B (0.17); C (0.45); D (0.25); -- (0.45)
V/C: 0.45 | LOS: C

Kinnaman (South) @ 198th — 24-S
-- (0.14); E (0.69); A (0.06); A (0.07), -- (0.35)
V/C: 0.69 | LOS: E

Kinnaman @ 185th — 25
C (0.38), D (0.69); D (0.85), E (0.70); E (0.83), C (0.54); C (0.39), D (0.83)
V/C: 0.85 | LOS: D

Rosa @ 229th — 26
Intersection not analyzed in this scenario

Rosa @ Cornelius Pass — 27
Intersection not analyzed in this scenario

Rosa @ 209th — 28
-- (0.21), A (0.07); C (0.47); -- (0.32)
V/C: 0.47 | LOS: C

River @ Rosedale — 29
Intersection not analyzed in this scenario

Rosedale @ 229th — 30
Intersection not analyzed in this scenario

Rosedale @ Cornelius Pass — 31
Intersection not analyzed in this scenario

Rosedale @ 209th — 32
-- (0.24), A (0.01); C (0.16); C (0.22), C (0.13); A (0.29), -- (0.31)
V/C: 0.22 | LOS: C

Farmington @ 209th — 33
B (0.22), E (0.77); C (0.15), D (0.60), D (0.35); D (0.64), D (0.74); D (0.35), D (0.86)
V/C: 0.78 | LOS: D

Farmington @ 198th — 34
C (0.06), C (0.66); B (0.15), C (0.68), D (0.13); C (0.62), B (0.33); D (0.25)
V/C: 0.65 | LOS: C

Farmington @ 185th — 35
C (0.32), D (0.62); C (0.70), D (0.48); D (0.70), C (0.67); D (0.65), C (0.81)
V/C: 0.72 | LOS: C

DRAFT - FINAL 3-26-2013

Legend

V/C: 0.01	LOS: A	Overall Intersection Operations

A (0.01) — Lane Group LOS (V/C)
V/C: — Volume-to-Capacity Ratio
LOS: — Level of Service
-- — No LOS for free movement
ExistingLane Configuration
Proposed Lane Configuration
Base Case Lane Configuration

Signalized intersection
Roundabout
STOP-Controlled Approach
Intersection performance meets operational standard
Intersection performance fails operational standard
Intersection mitigated from base case
Proposed Signalized intersection
Proposed Roundabout

1. Operations based on average hour (PHF = 1.00)
2. Overall STOP-controlled intersection operations reported for worst STOP-controlled movement
3. Signal phasing changed between Not-Mitigated and Mitigated
4. Mitigation goal was to meet governing intersection operational standard
** Intersection identified for potential grade separation long term*

Hillsboro OREGON

Figure 8

AM Movement Operations[1]
2035 with 2012 UGB Build-out
Without South Hillsboro - Mitigated[4]

South Hillsboro Focus Area Plan

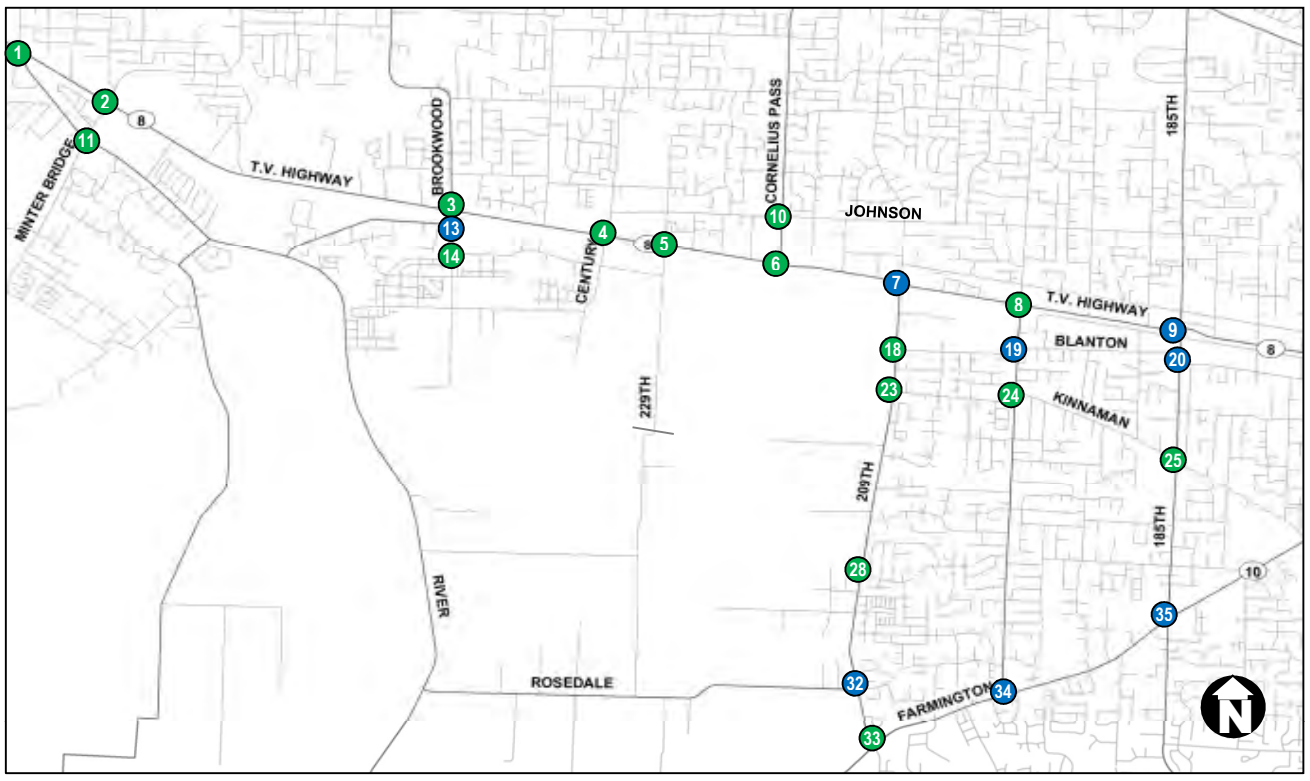

TV Hwy @ River — 1
D (0.48), E (0.61); A (0.53), B (0.30); B (0.07), C (0.85); F (0.98), D (0.46)
V/C: 0.72 | LOS: C

TV Hwy @ Minter Bridge/Cypress — 2
C (0.10), D (0.86), C (0.41); B (0.06), C (0.67), F (1.39); E (0.86), D (0.95); D (0.74), D (0.10)
V/C: 0.87 | LOS: D

TV Hwy @ Brookwood — 3
D (0.78), E (0.76); B (0.11), B (0.67), F (1.05); E (0.75), C (0.78), B (0.03); E (0.61), D (0.54), D (0.33)
V/C: 0.82 | LOS: D

TV Hwy @ Century — 4
E (0.84), E (0.66); C (0.83), F (0.85); E (0.71), C (0.80), B (0.10); E (0.63), D (0.69)
V/C: 0.79 | LOS: D

TV Hwy @ 67th/229th — 5
D (0.02), F (0.98); A (0.07), B (0.57), E (0.30); D (0.44), A (0.60); F (1.36)
V/C: 0.70 | LOS: C

TV Hwy @ Cornelius Pass — 6
C (0.35), E (0.86); B (0.84); E (0.78), A (0.53)
V/C: 0.84 | LOS: C

TV Hwy @ 209th — 7
E (0.86), C (0.21); A (0.06), B (0.77), D (0.49); F (0.69), E (0.95), D (0.53); F (0.91), D (0.73)
V/C: 0.86 | LOS: D

TV Hwy @ 198th — 8
F (0.96), D (0.68); B (0.18), D (0.91), F (0.88); F (0.93), B (0.85), A (0.20); F (0.94), E (0.76), D (0.07)
V/C: 0.93 | LOS: D

TV Hwy @ 185th* — 9
C (0.31), E (0.88), E (0.68); D (0.93), E (0.84); E (0.79), D (0.78), B (0.42); E (0.86), D (0.71), C (0.22)
V/C: 0.88 | LOS: D

Cornelius Pass @ Johnson — 10
B (0.31), B (0.22); D (0.43), E (0.59); D (0.32), E (0.64); B (0.22), A (0.18)
V/C: 0.38 | LOS: C

River @ Minter Bridge — 11
C (0.68), E (0.93); C (0.80), D (0.56); D (0.66), D (0.94); E (0.76), D (0.79), C (0.02)
V/C: 0.90 | LOS: D

River @ Davis — 12
Intersection not analyzed in this scenario

Witch Hazel @ Brookwood — 13
-- (0.19), -- (0.27); F (0.92); B (0.37); -- (0.27)
V/C: 0.92 | LOS: F

Alexander @ Brookwood — 14
A (0.64); A (0.21); A (0.11); A (0.16)
V/C: 0.64 | LOS: A

Alexander @ Century — 15
Intersection not analyzed in this scenario

Alexander @ 229th — 16
Intersection not analyzed in this scenario

Alexander @ Cornelius Pass — 17
Intersection not analyzed in this scenario

Blanton @ 209th — 18
-- (0.54), A (0.07); D (0.33); -- (0.29)
V/C: 0.33 | LOS: D

Blanton (North) @ 198th — 19-N
B (0.04), D (0.83), B (0.43); C (0.73), C (0.10); B (0.29), C (0.34); B (0.47), C (0.39)
V/C: 0.70 | LOS: C

Blanton (South) @ 198th — 19-S
Intersection realigned with Blanton North (19-N). Final alignment of combined intersection to be determined.

Blanton (North) @ 185th — 20-N
Intersection realigned with Blanton North (20-S). Final alignment of combined intersection to be determined.

Blanton (South) @ 185th — 20-S
C (0.86), B (0.33); C (0.22), C (0.44); C (0.55), C (0.48); B (0.34), B (0.47)
V/C: 0.63 | LOS: C

Kinnaman @ Century — 21
Intersection not analyzed in this scenario

Kinnaman @ Cornelius Pass — 22
Intersection not analyzed in this scenario

Kinnaman @ 209th — 23
-- (0.50), A (0.10); B (0.05); E (0.08); -- (0.27)
V/C: 0.08 | LOS: E

Kinnaman (North) @ 198th — 24-N
-- (0.27), A (0.23); B (0.24); E (0.38); -- (0.23)
V/C: 0.38 | LOS: E

Kinnaman (South) @ 198th — 24-S
-- (0.30); C (0.35); B (0.03); A (0.02), -- (0.16)
V/C: 0.35 | LOS: C

Kinnaman @ 185th — 25
C (0.76), C (0.82); D (0.67), E (0.67); E (0.69), D (0.69); C (0.47), C (0.55)
V/C: 0.72 | LOS: C

Rosa @ 229th — 26
Intersection not analyzed in this scenario

Rosa @ Cornelius Pass — 27
Intersection not analyzed in this scenario

Rosa @ 209th — 28
-- (0.39), A (0.18); B (0.16); -- (0.29)
V/C: 0.16 | LOS: B

River @ Rosedale — 29
Intersection not analyzed in this scenario

Rosedale @ 229th — 30
Intersection not analyzed in this scenario

Rosedale @ Cornelius Pass — 31
Intersection not analyzed in this scenario

Rosedale @ 209th — 32
-- (0.39), A (0.02); F (0.55); D (0.79), D (0.79); A (0.19), -- (0.29)
V/C: 0.79 | LOS: D

Farmington @ 209th — 33
D (0.93), D (0.75); C (0.34), D (0.86), E (0.53); E (0.78), C (0.64); D (0.11), D (0.51)
V/C: 0.89 | LOS: D

Farmington @ 198th — 34
C (0.07), D (0.67); B (0.25), C (0.88), D (0.13); E (0.84), A (0.31); D (0.19)
V/C: 0.80 | LOS: C

Farmington @ 185th — 35
E (0.96), D (0.69); D (0.93), E (0.77); F (0.91), D (0.67); F (0.93), C (0.42)
V/C: 0.87 | LOS: D

DRAFT - FINAL 3-26-2013

Legend

V/C: 0.01	LOS: A	Overall Intersection Operations
	A (0.01)	Lane Group LOS (V/C)
	V/C:	Volume-to-Capacity Ratio
	LOS:	Level of Service
	--	No LOS for free movement
		ExistingLane Configuration
		Proposed Lane Configuration
		Base Case Lane Configuration

Signalized intersection
Roundabout
STOP-Controlled Approach
Intersection performance meets operational standard
Intersection performance fails operational standard
Intersection mitigated from base case
Proposed Signalized intersection
Proposed Roundabout

1. Operations based on average hour (PHF = 1.00)
2. Overall STOP-controlled intersection operations reported for worst STOP-controlled movement
3. Signal phasing changed between Not-Mitigated and Mitigated
4. Mitigation goal was to meet governing intersection operational standard
** Intersection identified for potential grade separation long term*

Hillsboro OREGON

Figure 9

PM Movement Operations[1]
2035 with 2012 UGB Build-out
Without South Hillsboro - Mitigated[4]

South Hillsboro Focus Area Plan

listed in **Table 4**. Improvements to meet ODOT mobility targets are shaded in gray. Detailed mitigated analysis worksheets are presented in **Appendix F**.

Table 4: 2035 with 2012 UGB Build-out Without South Hillsboro Base Case Mitigated Traffic Operations

INTERSECTION[1,3]	ACTION TO ADDRESS EXISTING MOBILITY STANDARD WITHOUT SOUTH HILLSBORO DEVELOPMENT	BASE CASE OPERATIONS (MITIGATED OPERATIONS; V/C ≤ 0.99)			
		AM		PM	
		V/C*	LOS**	V/C	LOS
3. SW BROOKWOOD AVE. & TV HWY[2]	• EXTEND SOUTHBOUND LEFT-TURN STORAGE TO 500 FEET	0.73 (0.71)	C (C)	0.78 (0.82)	D (D)
7. SW 209th AVE. & TV Hwy	• ADD EASTBOUND RIGHT-TURN LANE	1.16 (0.99)	F (E)	1.09 (0.86)	F (D)
9. SW 185TH AVE. & TV HWY	• ADD DUAL LEFT-TURN LANES FOR EASTBOUND, WESTBOUND, NORTHBOUND, AND SOUTHBOUND • ADD EASTBOUND RIGHT-TURN LANE	1.07 (0.92)	F (D)	1.22 (0.88)	F (D)
13. SE WITCH HAZEL RD. & SW BROOKWOOD AVE.	• CONVERT UNSIGNALIZED INTERSECTION TO RIGHT-IN/RIGHT-OUT OR NEW SIGNAL OR ALTERNATIVE ACCESS (Right-In/Right-Out used for analysis)	0.77 (0.39)	E (B)	>2.0 (0.92)	F (F)
19-N. SW 198TH AVE. & SW BLANTON ST. (NORTH)	• REALIGN AND SIGNALIZE BLANTON NORTH AND BLANTON SOUTH INTERSECTIONS • PROVIDE LEFT-TURN LANES ON ALL APPROACHES • MAKE ALL LEFT TURNS PROTECTIVE/PERMISSIVE (FLASHING YELLOW)	1.65 (0.79)	F (D)	1.67 (0.70)	F (C)
19-S. SW 198TH AVE. & SW BLANTON ST. (SOUTH)	• REALIGNED WITH BLANTON NORTH. SEE 19-N FOR MITIGATED OPERATIONS.	1.15 (N/A)	F (N/A)	0.93 (N/A)	F (N/A)
20-N. SW 185TH AVE. & SW BLANTON ST. (NORTH)	• REALIGNED WITH BLANTON NORTH. SEE 20-N FOR MITIGATED OPERATIONS.	0.92 (N/A)	F (N/A)	1.15 (N/A)	F (N/A)
20-S. SW 185TH AVE. & SW BLANTON ST. (SOUTH)	• REALIGN AND SIGNALIZE BLANTON NORTH AND BLANTON SOUTH INTERSECTIONS • PROVIDE LEFT-TURN LANES ON ALL APPROACHES • MAKE ALL LEFT TURNS PROTECTIVE/PERMISSIVE (FLASHING YELLOW)	>2.0 (0.69)	F (C)	>2.0 (0.63)	F (C)
32. SW 209TH AVE. & SW ROSEDALE RD.	• ADD EASTBOUND RIGHT-TURN LANE	0.36 (0.22)	C (C)	1.17 (0.79)	F (D)
35. SW 185TH AVE. & SW FARMINGTON RD.	• EXTEND 5-LANE SECTION OF SW 185TH AVE. SOUTH OF THE INTERSECTION FOR 1,500 FEET • EXTEND 5-LANE SECTION OF FARMINGTON RD. TO 198TH AVE. • INCREASE CYCLE LENGTH TO 120 SECONDS • MAKE NORTHBOUND AND SOUTHBOUND LEFT TURNS PROTECTIVE/PERMISSIVE (FLASHING YELLOW)	1.13 (0.72)	F (C)	1.23 (0.87)	F (D)

*v/c = volume-to-capacity ratio.
**LOS = Level of Service.
1. Intersection number corresponds to intersection ID number on Figures 6 through 9.
2. Mitigation based on a queuing analysis and is not driven by intersection v/c ratio.
3. Improvements to meet ODOT mobility targets are shaded in gray

INTERSECTION OPERATIONS IMPROVEMENTS – WITH SOUTH HILLSBORO

This section summarizes the results of the traffic operations analysis for 2035 with 2012 UGB Build-out with the planned South Hillsboro development. The intersections evaluated include the intersections that were analyzed for the analysis without the South Hillsboro development and 11 additional intersections within the South Hillsboro Community Plan Area for a total of 35 intersections in the Focus Plan Project Area. The street network for the "with South Hillsboro development" analysis includes the possible improvements listed in **Table 4**, along with the Cornelius Pass Road, Century Boulevard/234th Avenue, Alexander-Blanton, Kinnaman Road, and Rosa Road extensions, and the closure of the rail crossing at SW 229th Avenue.

Table 5 presents the critical movement v/c ratios and LOS performance for intersections that fail to meet applicable standards, with the South Hillsboro development, in 2035. The findings reflect the signal timing plans and intersection geometry for the without South Hillsboro development mitigated condition. **Figures 10** and **11** show the v/c ratio and LOS for the AM and PM peak hour at all 35 nonmitigated intersections by lane group, and the critical v/c and LOS for the intersections. Detailed analysis worksheets for traffic operations with the South Hillsboro development and with no additional mitigation beyond what was identified for the without South Hillsboro development scenario are presented in **Appendix G**.

In the 2035 "with South Hillsboro development" scenario, 19 of 35 traffic analysis area intersections are expected to need mitigation to meet the applicable mobility thresholds in either the AM and/or PM peak hour as a result of development in the South Hillsboro Community Plan Area. Of the 19 intersections, 17 are intersections that did not require improvements for the "without South Hillsboro development" scenario. Two of the intersections require additional improvements beyond what was proposed for the "without South Hillsboro development" analysis. **Table 5** lists the possible improvements for each of these intersections for them to maintain adequate operating conditions for motorists. These improvements are needed as a result of the South Hillsboro planned development. Improvements that cause widening to the approaches crossing the rail line will require additional coordination with ODOT Rail Division and may result in changes to the intersection lane configurations. Improvements to meet ODOT mobility targets are shaded in gray. In addition, the upcoming South Hillsboro Master Plan may further refine the identified transportation needs after further study of the area. **Figures 12** and **13** show the v/c ratio and LOS for the AM and PM peak hour at all 17 intersections with the possible improvements listed in **Table 5**. Detailed worksheets for the mitigated with South Hillsboro development analysis are presented in **Appendix H**.

Table 5: 2035 with 2012 UGB Build-out With South Hillsboro Traffic Operations

		NO MITIGATION OPERATIONS (MITIGATED OPERATIONS; V/C ≤ 0.99)			
		AM		PM	
INTERSECTION[1,3]	**ACTION TO ADDRESS EXISTING MOBILITY STANDARD AS A RESULT OF SOUTH HILLSBORO DEVELOPMENT**	**V/C***	**LOS****	**V/C**	**LOS**
4. SE CENTURY BLVD./SW 234TH AVE. & TV HWY	• MAKE ALL LEFT TURNS PROTECTIVE/PERMISSIVE (FLASHING YELLOW) • ADD SECOND NORTHBOUND & SOUTHBOUND THROUGH LANE • WIDEN RAIL CROSSING • ADD OFF-RD. BIKE LANES FROM TV HWY TO ALEXANDER ST.	1.16 (0.95)	F (D)	1.00 (0.77)	F (D)
5. SW 229TH AVE. & TV HWY[2]	• CLOSE SOUTH LEG (SW 229TH AVE.) TO EXTEND SW CORNELIUS PASS RD. ACROSS THE RAILROAD • BUILD CUL-DE-SAC ON 229TH AVE.	N/A (0.50)	N/A (A)	N/A (0.64)	N/A (A)
6. SW CORNELIUS PASS RD. & TV HWY	• EXTEND SW CORNELIUS PASS RD. SOUTH • DUAL LEFT-TURN LANES ON ALL APPROACHES • ADD RIGHT-TURN LANES TO THE EASTBOUND AND WESTBOUND APPROACHES • NORTHBOUND APPROACH WOULD HAVE TWO THROUGH AND ONE RIGHT-TURN LANE • SOUTHBOUND APPROACH WOULD HAVE ONE THROUGH AND ONE THROUGH/RIGHT-TURN LANE • NEW RAIL CROSSING	N/A (0.92)	N/A (D)	N/A (0.97)	N/A (E)

Table 5: 2035 with 2012 UGB Build-out With South Hillsboro Traffic Operations

INTERSECTION[1]	ACTION TO ADDRESS EXISTING MOBILITY STANDARD AS A RESULT OF SOUTH HILLSBORO DEVELOPMENT	NO MITIGATION OPERATIONS (MITIGATED OPERATIONS; V/C ≤ 0.99)			
		AM		PM	
		V/C*	LOS**	V/C	LOS
7. SW 209TH AVE. & TV HWY	• CHANGE NORTHBOUND APPROACH TO A LEFT-TURN, A THROUGH, AND A RIGHT-TURN LANE • ADD SECOND SOUTBOUND THROUGH LANE • WIDEN AND ADJUST GRADE FOR NORTHBOUND APPROACH • MODIFY RAIL CROSSING	1.01 (0.91)	F (C)	0.95 (0.89)	D (C)
8. SW 198TH AVE. & TV HWY	• ADD A SECOND WESTBOUND LEFT-TURN LANE • ADD A SOUTHBOUND RIGHT-TURN LANE • MAKE NORTHBOUND AND SOUTHBOUND LEFT TURNS PROTECTIVE/PERMISSIVE (FLASHING YELLOW) • CONVERT NORTHBOUND APPROACH TO A LEFT, THROUGH, AND THROUGH/RIGHT	1.06 (0.88)	F (D)	1.05 (0.93)	F (D)
9. SW 185TH AVE. & TV HWY[1]	• ADD A WESTBOUND RIGHT-TURN LANE	0.92 (0.91)	D (D)	0.92 (0.88)	D (D)
15. SE CENTURY BLVD./SW 234TH AVE. & SE ALEXANDER ST.	• INSTALL A NEW SIGNAL	>2.00 (0.68)	F (B)	>2.00 (0.71)	F (B)
16. SW 229TH AVE. & SE ALEXANDER ST.	• CHANGE STOP CONTROL FROM EASTBOUND TO NORTHBOUND-SOUTHBOUND • ADD EASTBOUND LEFT-TURN LANE	N/A (0.36)	N/A (C)	N/A (0.31)	N/A (C)
17. SW CORNELIUS PASS RD. & SE ALEXANDER ST.	• CONSTRUCT NEW SIGNALIZED INTERSECTION	N/A (0.84)	N/A (D)	N/A (0.90)	N/A (C)
18. SW 209TH AVE. & SW BLANTON ST.	• INSTALL A NEW SIGNAL • ADD WESTBOUND LEFT-TURN LANE • CONSTRUCT WEST LEG OF INTERSECTION • ADD SECOND NORTHBOUND AND SOUTHBOUND THROUGH LANE	>2.00 (0.55)	F (B)	>2.00 (0.68)	F (C)
21. SW CENTURY BLVD./234TH AVE. & SW KINNAMAN RD.	• CONSTRUCT A NEW STOP-CONTROLLED INTERSECTION	N/A (0.09)	N/A (B)	N/A (0.31)	N/A (C)
22. SW CORNELIUS PASS RD. & SW KINNAMAN RD.	• CONSTUCT A NEW SIGNALIZED INTERSECTION	N/A (0.62)	N/A (B)	N/A (0.58)	N/A (B)
23. SW 209TH AVE. & SW KINNAMAN RD.	• INSTALL A NEW SIGNAL • CONSTRUCT WEST LEG OF INTERSECTION • ADD SECOND NORTHBOUND AND SOUTHBOUND THROUGH LANE	>2.00 (0.52)	F (B)	>2.00 (0.62)	F (B)
24-N. SW 198TH AVE. & SW KINNAMAN RD. (NORTH)	• REALIGN AND SIGNALIZE KINNAMAN NORTH AND KINNAMAN SOUTH INTERSECTIONS	1.77 (0.78)	F (C)	1.77 (0.53)	F (B)
24-S. SW 198TH AVE. & SW KINNAMAN RD. (SOUTH)	• REALIGN WITH KINNAMAN NORTH (SEE 13-N FOR MITIGATED OPERATIONS)	0.68 (N/A)	D (N/A)	0.68 (N/A)	D (N/A)
26. SW 229TH AVE. & SW ROSA RD.	• CONSTRUCT A NEW ROUNDABOUT	N/A (0.28)	N/A (A)	N/A (0.33)	N/A (A)
27. SW CORNELIUS PASS RD. & SW ROSA RD.	• CONSTRUCT A NEW SIGNALIZED INTERSECTION	N/A (0.66)	N/A (B)	N/A (0.55)	N/A (B)
28. SW 209TH AVE. & SW ROSA RD.	• INSTALL A NEW SIGNAL • CONSTRUCT WEST LEG OF INTERSECTION • ADD SECOND NORTHBOUND AND SOUTHBOUND THROUGH LANE	1.49 (0.64)	F (B)	1.02 (0.52)	F (B)
29. SW RIVER RD. & SW ROSEDALE RD.	• CONSTRUCT A NEW ROUNDABOUT	0.92 (0.62)	F (B)	1.32 (0.84)	F (C)
30. SW 229TH AVE. & SW ROSEDALE RD.	• ADD EASTBOUND LEFT-TURN LANE	0.21 (0.21)	B (B)	0.24 (0.24)	C (C)

Table 5: 2035 with 2012 UGB Build-out With South Hillsboro Traffic Operations

INTERSECTION[1,3]	ACTION TO ADDRESS EXISTING MOBILITY STANDARD AS A RESULT OF SOUTH HILLSBORO DEVELOPMENT	NO MITIGATION OPERATIONS (MITIGATED OPERATIONS; V/C ≤ 0.99)			
		AM		PM	
		V/C*	LOS**	V/C	LOS
31. SW CORNELIUS PASS RD. & SW ROSEDALE RD.	• CONSTRUCT A NEW ROUNDABOUT	N/A (0.56)	N/A (A)	N/A (0.57)	N/A (B)
32.SW 209TH AVE. & SW ROSEDALE RD.	• INSTALL A SIGNAL	>2.0 (0.51)	F (B)	>2.0 (0.64)	F (C)
33. SW 209TH AVE. & SW FARMINGTON RD.	• ADD SECOND SOUTHBOUND LEFT-TURN LANE • ADD SOUTHBOUND RIGHT-TURN LANE • MODIFY SIGNAL	1.01 (0.84)	F (D)	1.04 (0.85)	F (D)
34. SW 198TH AVE. & SW FARMINGTON RD.	• EXTEND 5-LANE SECTION OF FARMINGTON RD. TO SW 209TH AVE.	0.72 (0.65)	C (C)	0.96 (0.76)	D (C)

*v/c = volume-to-capacity ratio.
**LOS = Level of Service.

1. Intersection number corresponds to intersection ID number on Figures 10 through 13.
2. ODOT Rail is requiring the closure of the existing 229th rail crossing to allow the proposed Cornelius Pass Road rail crossing.
3. Improvements to meet ODOT mobility targets are shaded in gray

All intersections have been mitigated to operate at or below a v/c ratio of 0.99. Arterial roadways are expected to be congested in the future. Additional mitigations that will improve operations while limiting ROW impacts should be considered for beyond the 15-year near term time frame.

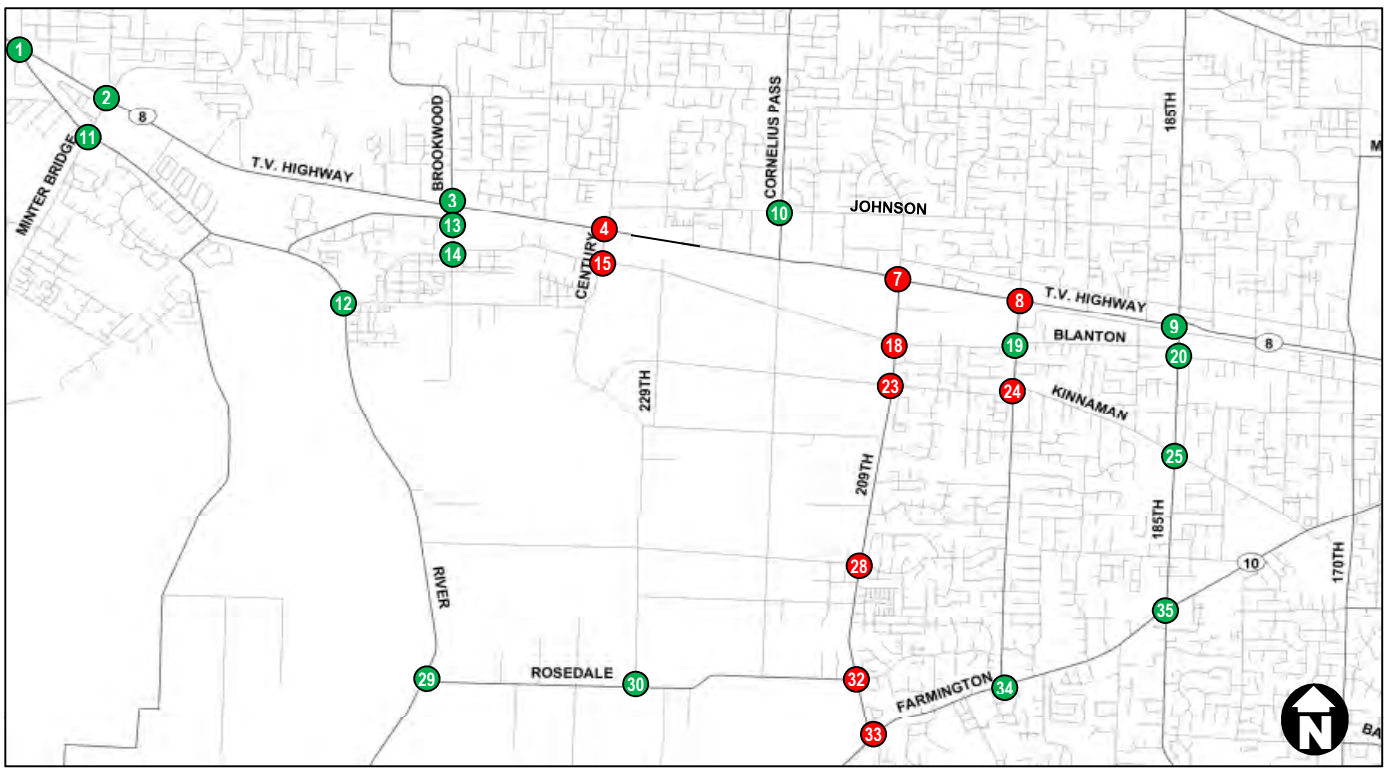

TV Hwy @ River
1
D (0.32) E (0.67) C (0.65) D (0.35) B (0.05) B (0.64) E (0.96) D (0.59)
V/C: 0.68 | LOS: D

TV Hwy @ Minter Bridge/Cypress
2
C (0.03) D (0.73) D (0.38) B (0.06) D (0.92) D (0.46) D (0.53) C (0.68) D (0.78) D (0.10)
V/C: 0.80 | LOS: D

TV Hwy @ Brookwood
3
D (0.43) F (0.95) B (0.10) C (0.78) E (0.83) E (0.61) C (0.61) B (0.05) F (0.97) D (0.74) D (0.59)
V/C: 0.77 | LOS: D

TV Hwy @ Century
4
D (0.67) F (0.86) F (1.18) F (0.88) F (1.29) C (0.88) B (0.18) F (1.18) F (1.12)
V/C: 1.16 | LOS: F

TV Hwy @ 67th/229th
5
Intersection not analyzed in this scenario

TV Hwy @ Cornelius Pass
6
Intersection not analyzed in this scenario

TV Hwy @ 209th
7
D (0.25) D (0.46) B (0.05) C (0.76) F (0.91) F (0.91) F (1.13) A (0.22) C (0.48) F (1.04)
V/C: 1.01 | LOS: E

TV Hwy @ 198th
8
E (0.77) F (1.04) C (0.16) C (0.68) F (0.99) F (0.54) F (1.08) A (0.17) D (0.69) F (1.05) D (0.47)
V/C: 1.06 | LOS: F

TV Hwy @ 185th*
9
C (0.20) D (0.60) F (0.88) C (0.73) E (0.79) E (0.76) D (0.93) B (0.16) E (0.78) E (0.97) C (0.37)
V/C: 0.92 | LOS: D

Cornelius Pass @ Johnson
10
C (0.28) C (0.37) C (0.24) C (0.66) C (0.25) D (0.78) B (0.34) D (0.90)
V/C: 0.81 | LOS: C

River @ Minter Bridge
11
C (0.65) D (0.71) D (0.94) D (0.43) D (0.43) C (0.59) D (0.65) D (0.84) C (0.05)
V/C: 0.82 | LOS: D

River @ Davis
12
A (0.17) C (0.49) B (0.15) B (0.40) B (0.76) B (0.21)
V/C: 0.61 | LOS: B

Witch Hazel @ Brookwood
13
-- (0.08) -- (0.18) C (0.21) B (0.29) -- (0.57)
V/C: 0.29 | LOS: B

Alexander @ Brookwood
14
A (0.49) B (0.48) A (0.45) C (0.64)
V/C: 0.64 | LOS: C

Alexander @ Century
15
-- (0.14) A (0.11) F (1.06) F (>2.0) A (0.11) -- (0.27)
V/C: >2.0 | LOS: F

Alexander @ 229th
16
Intersection not analyzed in this scenario

Alexander @ Cornelius Pass
17
Intersection not analyzed in this scenario

Blanton @ 209th
18
-- (0.30) A (0.05) F (>2.0) F (>2.0) F (>2.0) A (0.17) -- (0.44)
V/C: >2.0 | LOS: F

Blanton (North) @ 198th
19-N
B (0.09) B (0.17) D (0.78) D (0.75) C (0.25) D (0.77) D (0.67) B (0.28) D (0.92)
V/C: 0.82 | LOS: D

Blanton (South) @ 198th
19-S
Intersection Realigned with Blanton North (19-N). Final alignment of combined intersection to be determined.

Blanton (North) @ 185th
20-N
Intersection Realigned with Blanton South (20-S). Final alignment of combined intersection to be determined.

Blanton (South) @ 185th
20-S
B (0.48) B (0.42) D (0.41) C (0.31) D (0.78) C (0.27) B (0.37) C (0.90)
V/C: 0.76 | LOS: C

Kinnaman @ Century
21
Intersection not analyzed in this scenario

Kinnaman @ Cornelius Pass
22
Intersection not analyzed in this scenario

Kinnaman @ 209th
23
-- (0.31) A (0.04) F (1.96) F (>2.0) F (>2.0) F (0.73) A (0.18) -- (0.44)
V/C: >2.0 | LOS: F

Kinnaman (North) @ 198th
24-N
-- (0.27) A (0.27) B (0.34) F (1.77) -- (0.30)
V/C: 1.77 | LOS: F

Kinnaman (South) @ 198th
24-S
-- (0.39) D (0.68) B (0.05) A (0.03) -- (0.10)
V/C: 0.68 | LOS: D

Kinnaman @ 185th
25
D (0.39) D (0.72) E (0.95) E (0.75) F (0.85) D (0.68) C (0.58) E (0.94)
V/C: 0.93 | LOS: D

Rosa @ 229th
26
Intersection not analyzed in this scenario

Rosa @ Cornelius Pass
27
Intersection not analyzed in this scenario

Rosa @ 209th
28
-- (0.30) A (0.03) D (0.63) F (1.49) A (0.07) -- (0.34)
V/C: 1.49 | LOS: F

River @ Rosedale
29
A (0.06) F (0.92) -- (0.32)
V/C: 0.92 | LOS: F

Rosedale @ 229th
30
B (0.21) -- (0.25) A (0.03)
V/C: 0.21 | LOS: B

Rosedale @ Cornelius Pass
31
Intersection not analyzed in this scenario

Rosedale @ 209th
32
-- (0.32) A (0.02) F (>2.0) D (0.52) D (0.39) B (0.41) -- (0.39)
V/C: >2.0 | LOS: F

Farmington @ 209th
33
B (0.41) F (1.87) C (0.28) D (0.73) D (0.45) F (1.33) D (0.83) D (0.35) C (0.82)
V/C: 1.01 | LOS: F

Farmington @ 198th
34
C (0.06) D (0.79) B (0.15) C (0.74) D (0.13) D (0.66) B (0.48) D (0.18)
V/C: 0.72 | LOS: C

Farmington @ 185th
35
C (0.34) E (0.79) D (0.70) D (0.46) E (0.91) D (0.88) E (0.76) D (0.94)
V/C: 0.86 | LOS: D

DRAFT - FINAL 3-26-2013

Legend

V/C: 0.01	LOS: A	Overall Intersection Operations [2]

A (0.01) Lane Group LOS (V/C)
V/C: Volume-to-Capacity Ratio
LOS: Level of Service
-- No LOS for free movement
Existing Lane Configuration
Base Case Lane Configuration

Signalized intersection
Roundabout
STOP-Controlled Approach
Intersection performance meets operational standard
Intersection performance fails operational standard

1. Operations based on average hour (PHF = 1.00)
2. Overall STOP-controlled intersection operations reported for worst STOP-controlled movement

Hillsboro OREGON

Figure 10

AM Movement Operations[1]
2035 with 2012 UGB Build-out
With South Hillsboro -
Not Mitigated

South Hillsboro Focus Area Plan

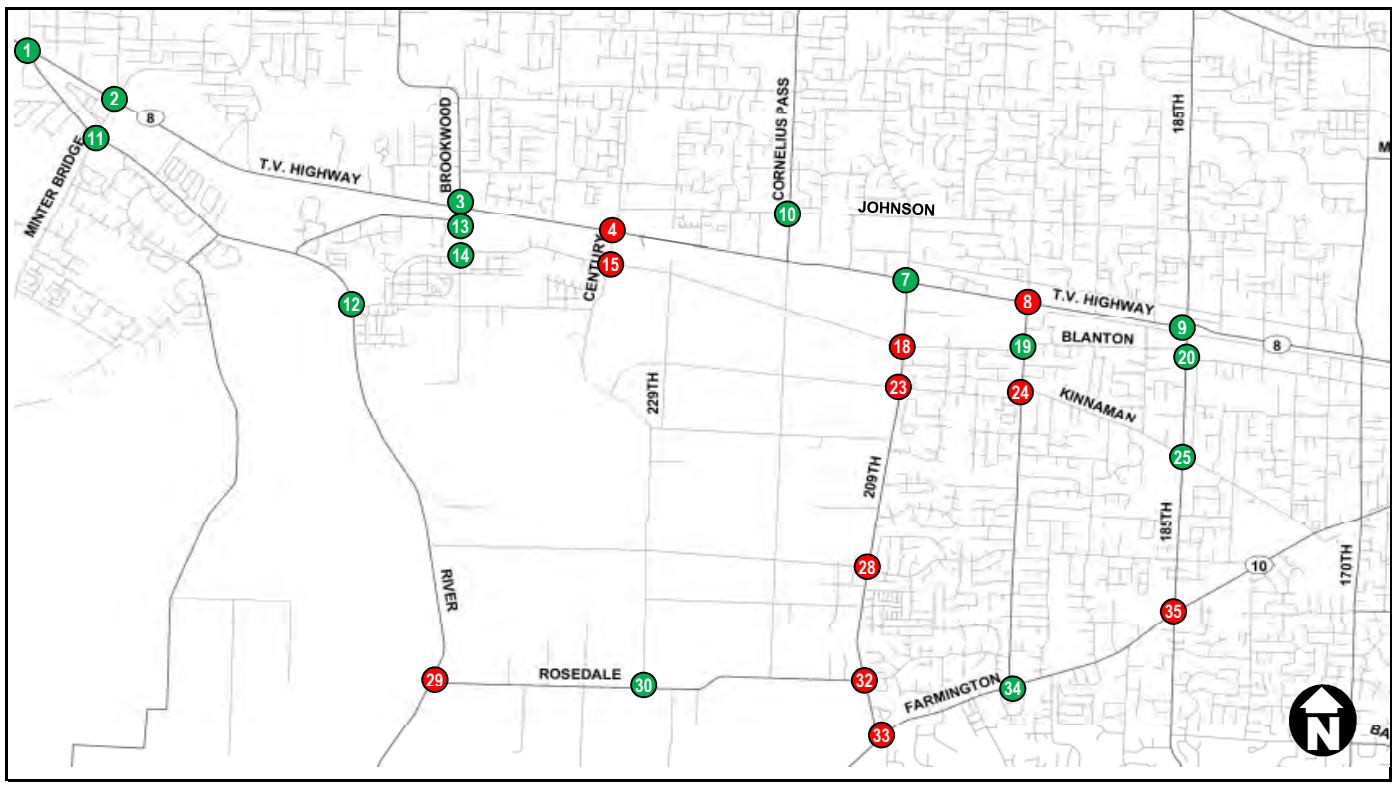

TV Hwy @ River — 1
B (0.11) C (0.89) | D (0.68) E (0.62) | B (0.56) D (0.49) | E (0.75) D (0.59)
V/C: 0.81 | LOS: C

TV Hwy @ Minter Bridge/Cypress — 2
F (0.86) D (0.95) | C (0.10) D (0.86) C (0.41) | B (0.06) C (0.67) F (1.39) | D (0.74) D (0.10)
V/C: 0.87 | LOS: D

TV Hwy @ Brookwood — 3
F (0.92) D (0.90) C (0.18) | E (0.96) D (0.50) | B (0.11) C (0.73) F (1.55) | E (0.82) D (0.60) D (0.29)
V/C: 0.99 | LOS: E

TV Hwy @ Century — 4
F (1.02) F (1.02) C (0.31) | F (1.00) E (0.57) | F (1.05) F (1.04) | F (0.94) C (0.54)
V/C: 1.00 | LOS: F

TV Hwy @ 67th/229th — 5
Intersection not analyzed in this scenario

TV Hwy @ Cornelius Pass — 6
Intersection not analyzed in this scenario

TV Hwy @ 209th — 7
F (0.69) D (0.97) B (0.42) | F (1.21) D (0.54) | A (0.09) B (0.82) E (0.87) | F (0.94) E (0.92)
V/C: 0.95 | LOS: D

TV Hwy @ 198th — 8
F (1.00) B (0.90) A (0.21) | F (1.08) E (0.78) | C (0.21) F (1.04) F (0.90) | F (1.05) E (0.76) D (0.07)
V/C: 1.05 | LOS: F

TV Hwy @ 185th* — 9
E (0.83) D (0.82) B (0.44) | C (0.33) E (0.95) E (0.68) | D (0.95) E (0.86) | F (0.90) D (0.68) C (0.22)
V/C: 0.92 | LOS: D

Cornelius Pass @ Johnson — 10
D (0.25) E (0.73) | C (0.65) B (0.27) | D (0.42) E (0.82) | B (0.50) A (0.40)
V/C: 0.66 | LOS: C

River @ Minter Bridge — 11
D (0.76) D (0.93) | C (0.68) E (0.91) | C (0.79) D (0.56) | E (0.73) D (0.82) C (0.03)
V/C: 0.86 | LOS: C

River @ Davis — 12
A (0.57) B (0.44) | B (0.03) B (0.52) | B (0.69) B (0.15)
V/C: 0.62 | LOS: B

Witch Hazel @ Brookwood — 13
D (0.59) | -- (0.20) -- (0.44) | F (<1.00) | -- (0.32)
V/C: <1.00 | LOS: F

Alexander @ Brookwood — 14
A (0.21) | D (0.94) | A (0.23) | A (0.24)
V/C: 0.94 | LOS: D

Alexander @ Century — 15
F (>2.0) | -- (0.35) A (0.16) | F (>2.0) | A (0.01) -- (0.15)
V/C: >2.0 | LOS: F

Alexander @ 229th — 16
Intersection not analyzed in this scenario

Alexander @ Cornelius Pass — 17
Intersection not analyzed in this scenario

Blanton @ 209th — 18
F (>2.0) F (>2.0) | -- (0.57) A (0.11) | F (>2.0) | B (0.14) -- (0.31)
V/C: >2.0 | LOS: F

Blanton (North) @ 198th — 19-N
B (0.03) B (0.38) | B (0.06) C (0.80) B (0.42) | C (0.75) B (0.10) | B (0.43) C (0.52)
V/C: 0.62 | LOS: C

Blanton (South) @ 198th — 19-S
Intersection Realigned with Blanton North (19-N). Final alignment of combined intersection to be determined.

Blanton (South) @ 198th — 19-S
Intersection Realigned with Blanton South (20-S). Final alignment of combined intersection to be determined.

Blanton (South) @ 185th — 20-S
C (0.69) E (0.89) | D (0.93) B (0.40) | E (0.88) D (0.74) | C (0.46) C (0.52)
V/C: 0.79 | LOS: D

Kinnaman @ Century — 21
Intersection not analyzed in this scenario

Kinnaman @ Cornelius Pass — 22
Intersection not analyzed in this scenario

Kinnaman @ 209th — 23
F (>2.0) F (>2.0) | -- (0.53) A (0.14) | F (>2.0) F (>2.0) | B (0.09) -- (0.30)
V/C: >2.0 | LOS: F

Kinnaman (North) @ 198th — 24-N
-- (0.30) | -- (0.27) A (0.27) | B (0.34) F (1.77)
V/C: 1.77 | LOS: F

Kinnaman (South) @ 198th — 24-S
D (0.68) B (0.05) | -- (0.39) | A (0.03) -- (0.10)
V/C: 0.68 | LOS: D

Kinnaman @ 185th — 25
E (0.80) D (0.88) | D (0.86) D (0.85) | D (0.79) E (0.76) | C (0.61) D (0.64)
V/C: 0.82 | LOS: D

Rosa @ 229th — 26
Intersection not analyzed in this scenario

Rosa @ Cornelius Pass — 27
Intersection not analyzed in this scenario

Rosa @ 209th — 28
F (1.02) | -- (0.51) A (0.06) | E (0.68) | A (0.04) -- (0.26)
V/C: 1.02 | LOS: F

River @ Rosedale — 29
-- (0.31) | A (0.26) | F (1.32)
V/C: 1.32 | LOS: F

Rosedale @ 229th — 30
A (0.03) | C (0.24) | -- (0.16)
V/C: 0.24 | LOS: C

Rosedale @ Cornelius Pass — 31
Intersection not analyzed in this scenario

Rosedale @ 209th — 32
F (1.87) F (1.63) | -- (0.49) A (0.02) | F (>2.0) | B (0.37) -- (0.38)
V/C: >2.0 | LOS: F

Farmington @ 209th — 33
F (1.08) D (0.76) | F (1.03) F (1.04) | D (0.59) F (1.08) E (0.57) | E (0.26) E (0.90)
V/C: 1.04 | LOS: F

Farmington @ 198th — 34
F (0.97) A (0.40) | D (0.07) F (0.97) | B (0.24) D (0.98) E (0.18) | E (0.25)
V/C: 0.96 | LOS: D

Farmington @ 185th — 35
F (1.07) D (0.76) | F (1.07) E (0.78) | E (0.98) F (0.88) | F (1.08) D (0.52)
V/C: 1.03 | LOS: F

DRAFT - FINAL 3-26-2013

Legend

V/C: 0.01	LOS: A	Overall Intersection Operations [2]

A (0.01) Lane Group LOS (V/C)
V/C: Volume-to-Capacity Ratio
LOS: Level of Service
-- No LOS for free movement
Existing Lane Configuration
Base Case Lane Configuration

Signalized intersection
Roundabout
STOP-Controlled Approach
Intersection performance meets operational standard
Intersection performance fails operational standard

1. Operations based on average hour (PHF = 1.00)
2. Overall STOP-controlled intersection operations reported for worst STOP-controlled movement

Hillsboro OREGON

Figure 11

PM Movement Operations[1]
2035 with 2012 UGB Build-out
With South Hillsboro -
Not Mitigated

South Hillsboro Focus Area Plan

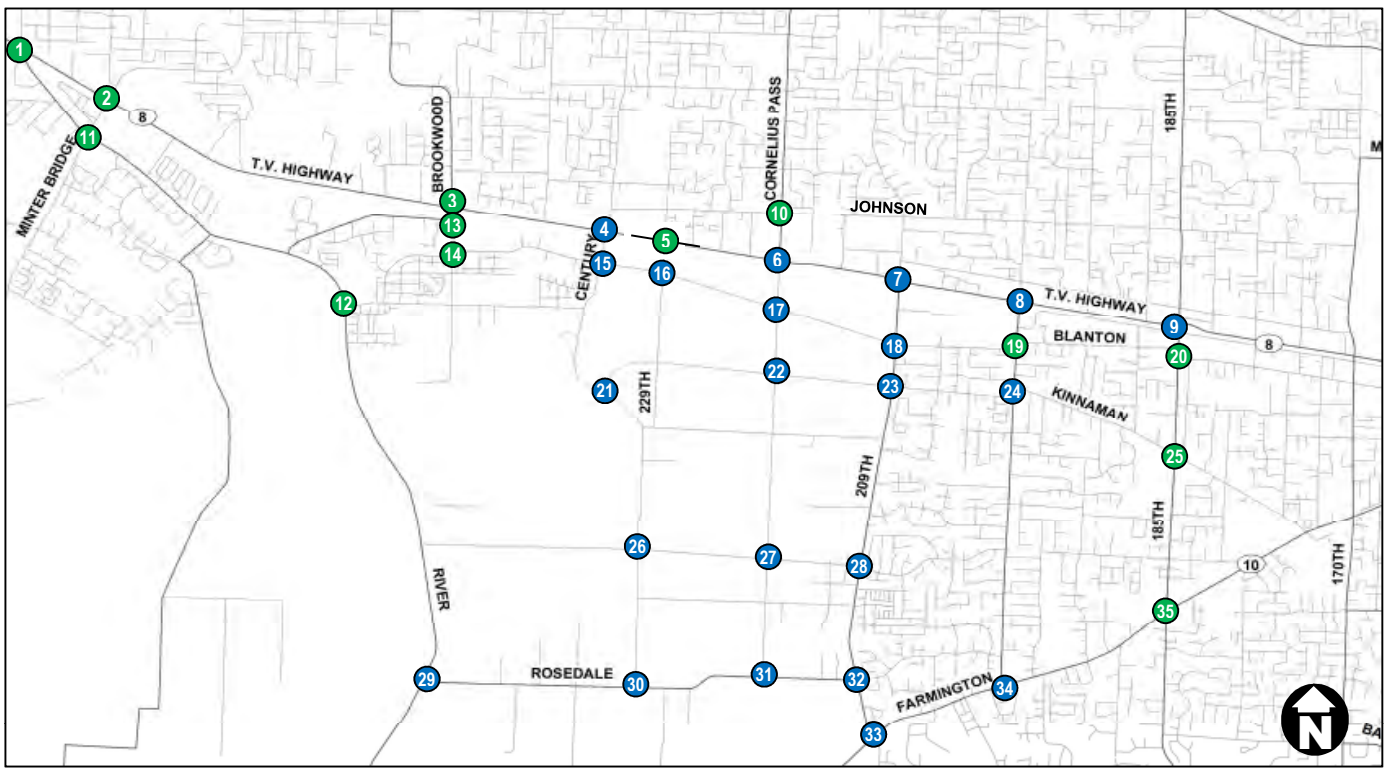

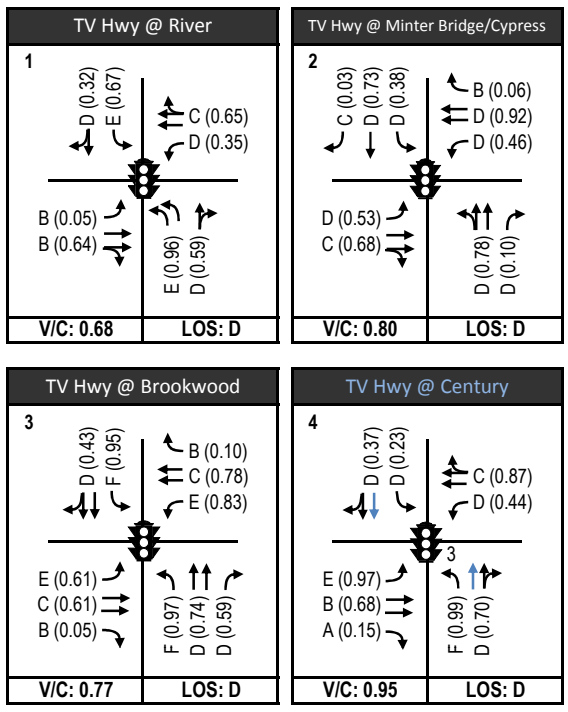

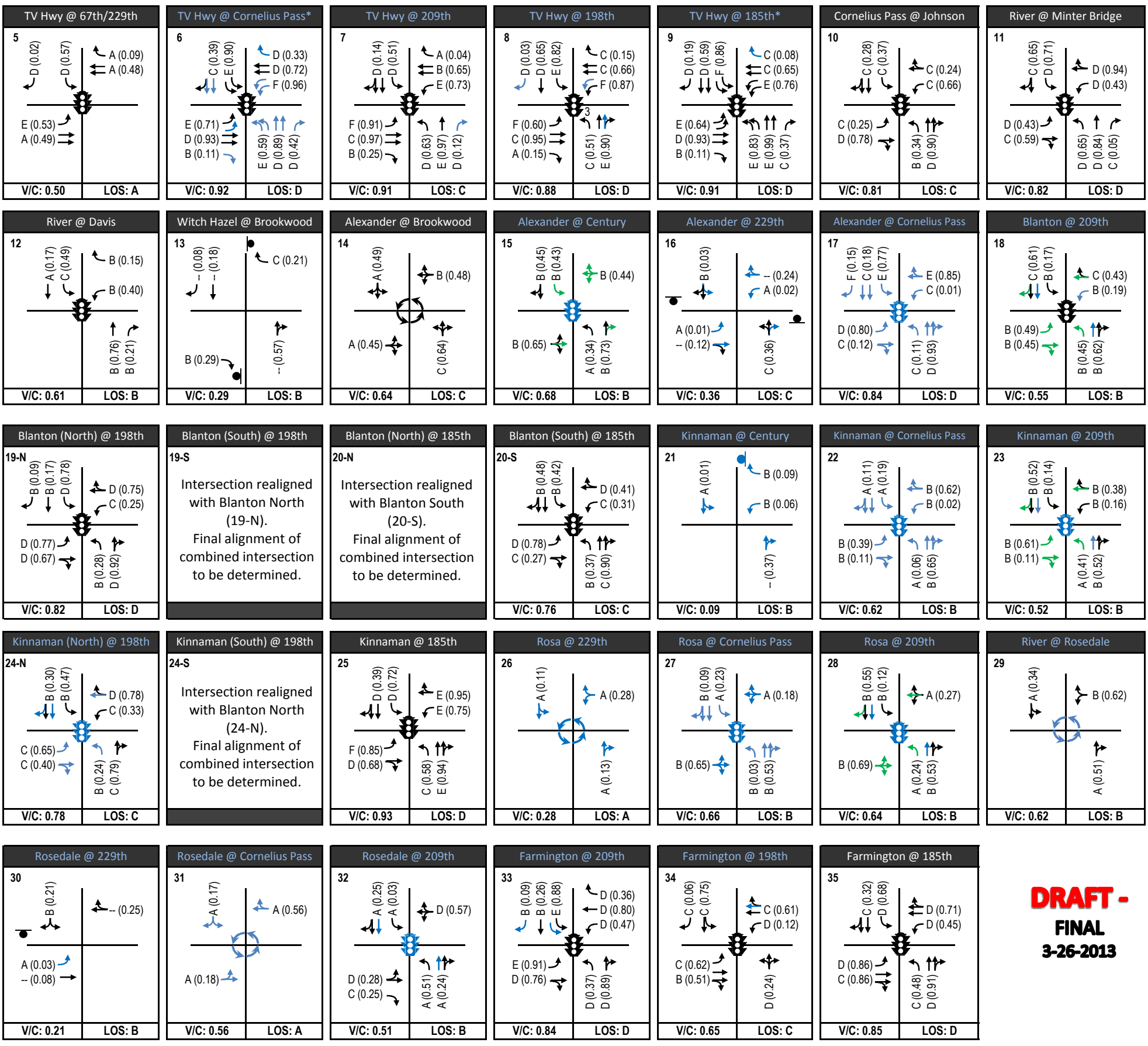

DRAFT - FINAL 3-26-2013

Legend

V/C: 0.01	LOS: A	Overall Intersection Operations
	A (0.01)	Lane Group LOS (V/C)
	V/C:	Volume-to-Capacity Ratio
	LOS:	Level of Service
	--	No LOS for free movement
		ExistingLane Configuration
		Proposed Lane Configuration
		Base Case Lane Configuration

Signalized intersection
Roundabout
STOP-Controlled Approach
Proposed Signalized intersection
Proposed Roundabout
Intersection performance meets operational standard
Intersection performance fails operational standard
Intersection mitigated from base case

1. Operations based on average hour (PHF = 1.00)
2. Overall STOP-controlled intersection operations reported for worst STOP-controlled movement
3. Signal phasing changed between Not-Mitigated and Mitigated
4. Mitigation goal was to meet governing intersection operational standard
** Intersection identified for potential grade separation long term*

Hillsboro OREGON

Figure 12

AM Movement Operations[1]
2035 with 2012 UGB Build-out
With South Hillsboro - Mitigated[4]

South Hillsboro Focus Area Plan

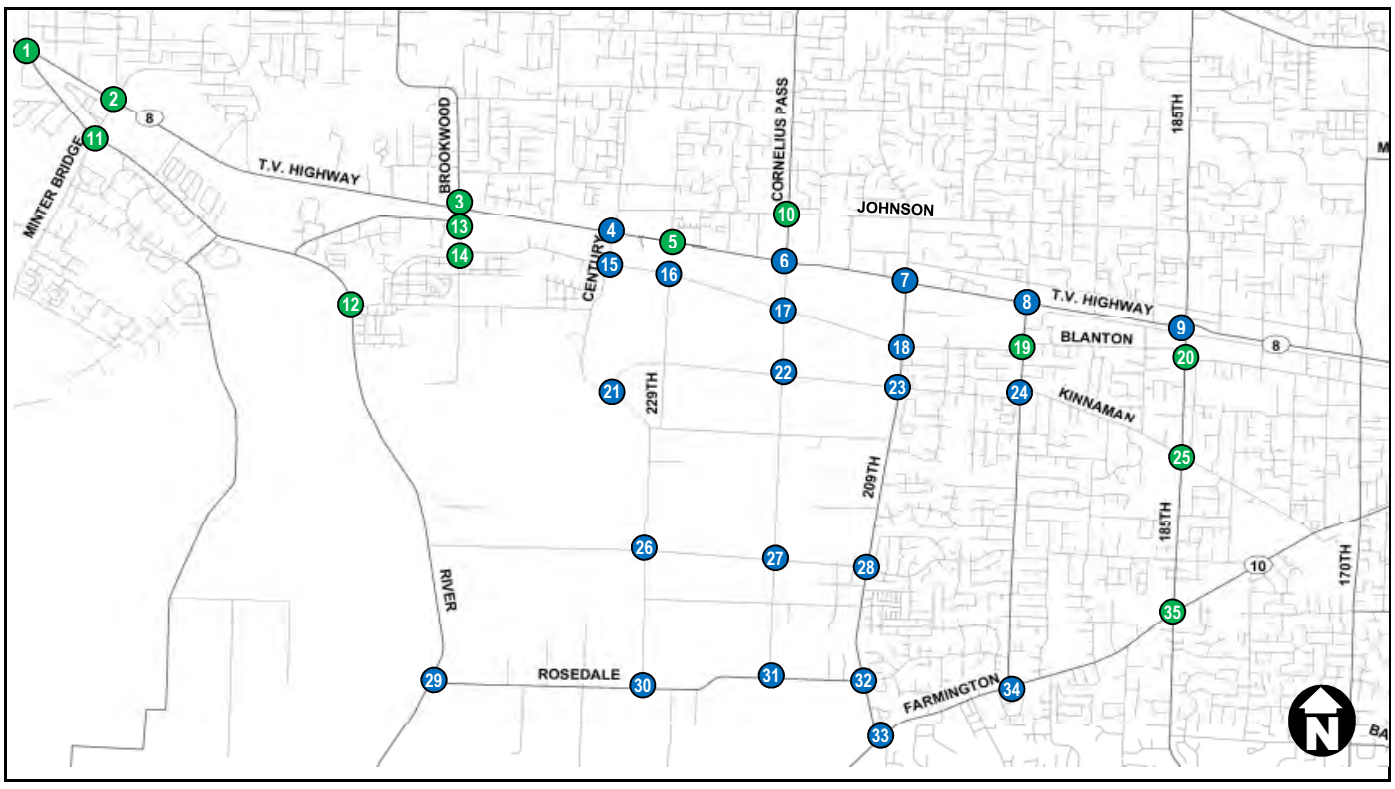

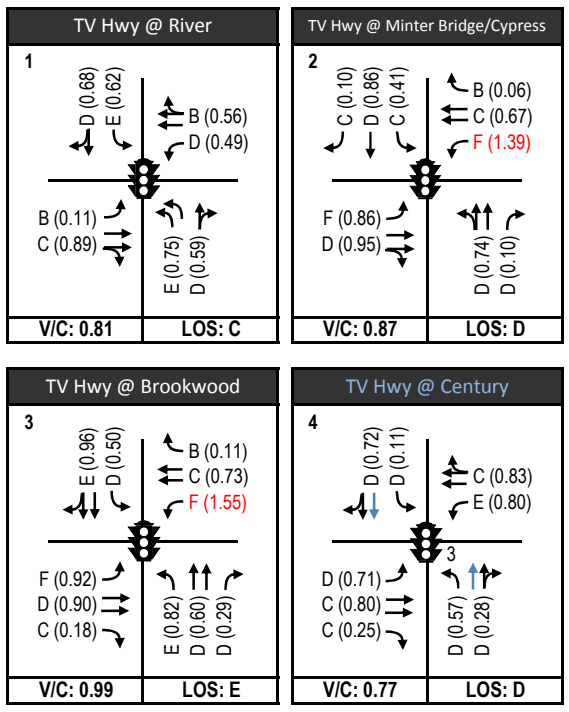

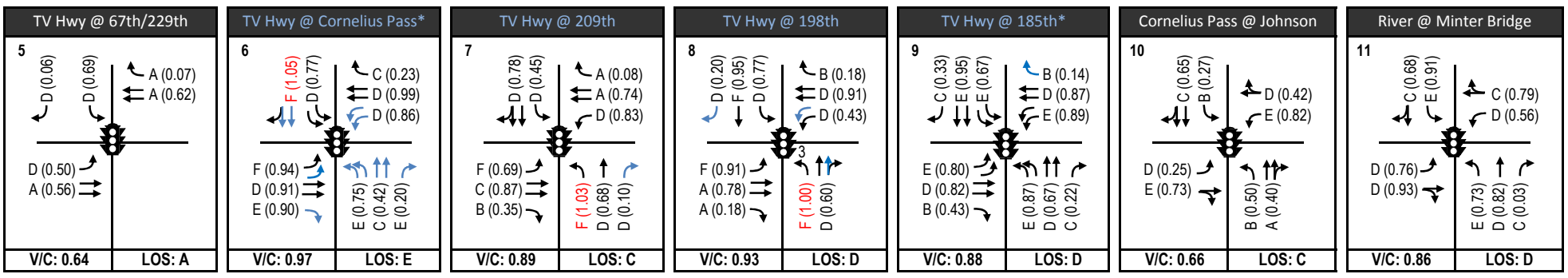

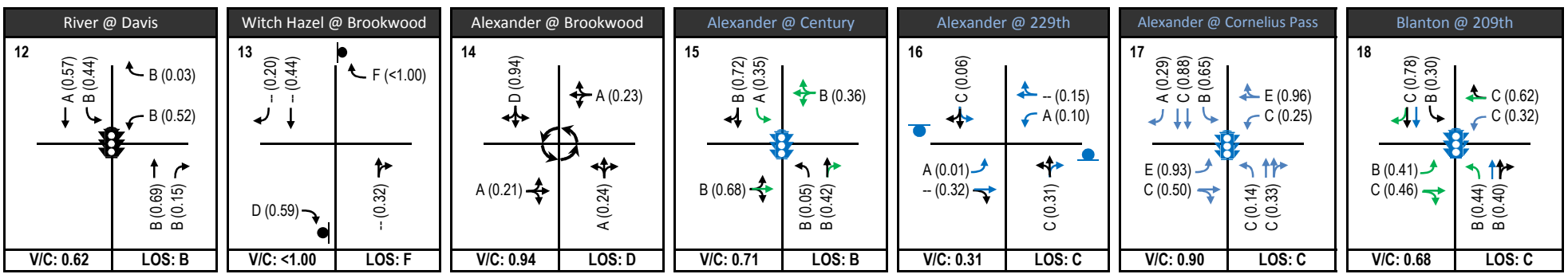

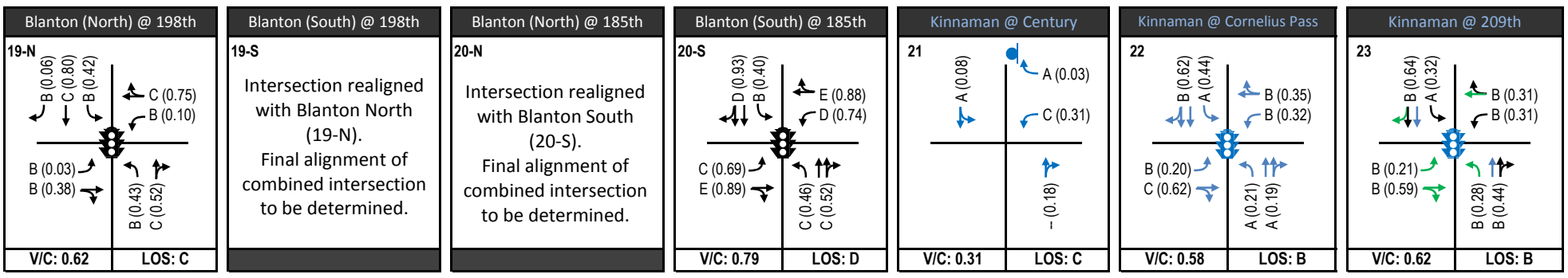

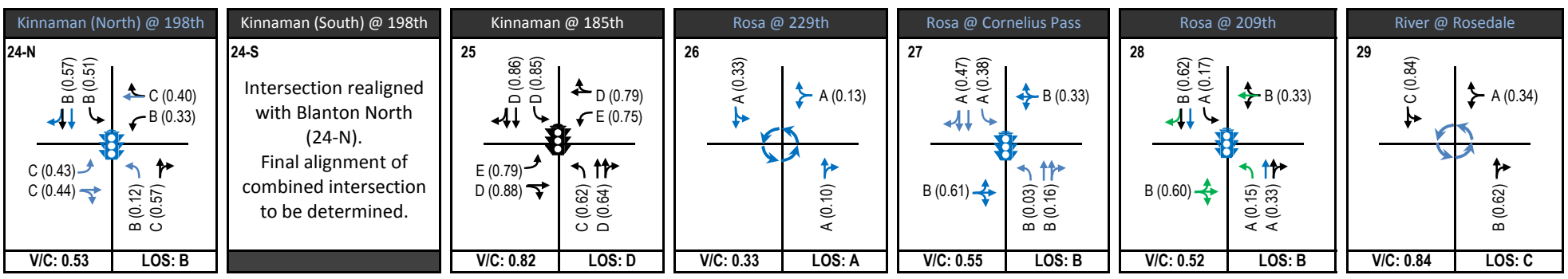

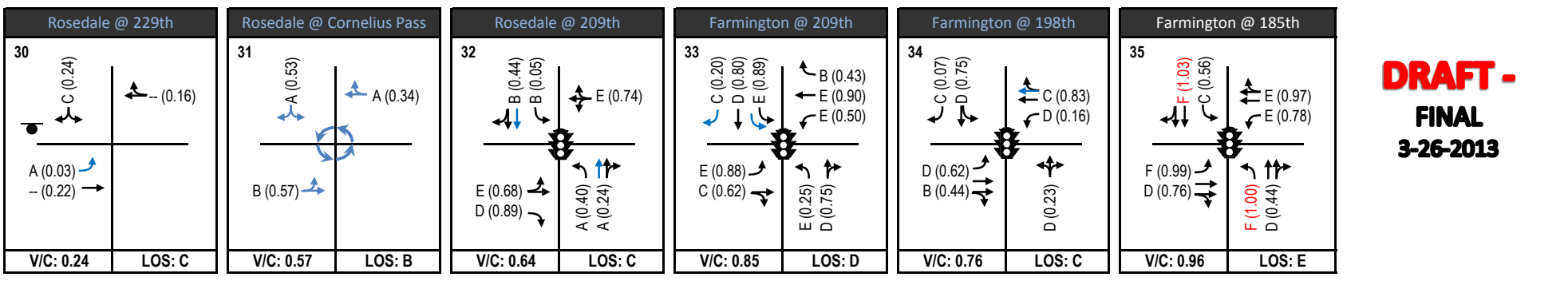

DRAFT - FINAL 3-26-2013

Legend

V/C: 0.01	LOS: A	Overall Intersection Operations
A (0.01)		Lane Group LOS (V/C)
V/C:		Volume-to-Capacity Ratio
LOS:		Level of Service
--		No LOS for free movement
		ExistingLane Configuration
		Proposed Lane Configuration
		Base Case Lane Configuration

Signalized intersection
Roundabout
STOP-Controlled Approach
Proposed Signalized intersection
Proposed Roundabout
Intersection performance meets operational standard
Intersection performance fails operational standard
Intersection mitigated from base case

1. Operations based on average hour (PHF = 1.00)
2. Overall STOP-controlled intersection operations reported for worst STOP-controlled movement
3. Signal phasing changed between Not-Mitigated and Mitigated
4. Mitigation goal was to meet governing intersection operational standard
** Intersection identified for potential grade separation long term*

Hillsboro OREGON

Figure 13

PM Movement Operations[1]
2035 with 2012 UGB Build-out
With South Hillsboro - Mitigated[4]

South Hillsboro Focus Area Plan

As shown in **Table 6**, the roadway capacity serving the evaluated intersections surrounding South Hillsboro remains primarily the same with and without the planned South Hillsboro development. The exception is the need for additional capacity on Century Boulevard between TV Hwy and Alexander Street and on 209th Avenue between TV Hwy and Farmington Road, and Farmington Road between 185th Avenue and 209th Avenue. The road classification will remain unchanged for these roadways even with the proposed additional capacity. The estimated Annual Average Daily Traffic (AADT) for each roadway is shown in the table next to the number of lanes under each scenario.

Table 6: Comparison of Roadway Capacities

ROADWAY	EXISTING FUNCTIONAL CLASSIFICATION[1]	AADT LOCATION	EXISTING LANES (AADT[3])	WITHOUT SOUTH HILLSBORO LANES (AADT)	WITH SOUTH HILLSBORO LANES (AADT)
TV HWY	ARTERIAL (PER TVCP)	E of Cornelius Pass Rd.	5 (36,100)	5 (38,000)	5 (35,200)
JOHNSON RD.	COLLECTOR	E of Cornelius Pass Rd.	2 (4,500)	3 (6,000)	3 (7,000)
BLANTON ST.	NEIGHBORHOOD ROUTE	E of 209th Ave.	2 (1,200)	2 (1,700)	2 (6,800)
KINNAMAN RD.	COLLECTOR	Between 185th & 198th Aves.	2 (7,700)	3 (7,700)	3 (10,500)
FARMINGTON RD.	ARTERIAL	Between 198th & 209th Aves.	2/3 (10,800)	3/5 (17,200)	3/5 (23,500)
RIVER RD.	ARTERIAL	Between TV Hwy & Minter Bridge Rd.	2/3 (8,400)	2/3 (10,300)	2/3 (11,600)
MINTER BRIDGE RD./ CYPRESS ST.	ARTERIAL	Between TV Hwy & River Rd.	3 (9,400)	3 (12,300)	3 (12,300)
BROOKWOOD AVE.	COLLECTOR/ARTERIAL[2]	Between TV Hwy & Alexander St.	2/3 (8,100)	3 (12,100)	3 (15,700)
CENTURY BLVD.	COLLECTOR	Between TV Hwy & Alexander St.	2/3 (4,500)	2/3 (7,400)	3/5 (12,300)
229TH AVE.	COLLECTOR	Between TV Hwy & Alexander St.	2 (2,100)	2/3 (3,400)	2/3 (2,500)
CORNELIUS PASS RD.	ARTERIAL	Between TV Hwy & Johnson Rd.	3 (11,000)	5 (12,700)	5 (25,500)
209TH AVE.	ARTERIAL	Between TV Hwy & Blanton St.	2/3 (12,100)	3 (14,200)	5 (16,100)
198TH AVE.	COLLECTOR	Between TV Hwy & Blanton St.	2/3 (14,100)	3 (15,500)	3 (16,400)
185TH AVE.	ARTERIAL	Between TV Hwy & Kinnaman Rd.	3/5 (16,300)	5 (25,200)	5 (26,500)

[1]Source: Washington County Functional Classification System.

[2]Brookwood Avenue is an Arterial north of TV Hwy and a Collector south of TV Hwy.

[3]AADT estimate based on the peak hour representing approximately 10 percent of the daily traffic.

FOCUS AREA PLAN TRANSPORTATION INFRASTRUTURE COST ESTIMATES

The Focus Area Plan also identifies the necessary infrastructure improvements to support build-out of the South Hillsboro Community Plan Area.

WITHOUT SOUTH HILLSBORO BASE CASE MITIGATION COSTS

Table 7 shows recommended Base Case mitigation projects and their construction costs that are needed to meet operational standards without development in the South Hillsboro Community Plan Area.

Table 7: Recommended Base Case Mitigation Projects

RTP/MAP PROJECT #	LOCATION	PROPOSED BASE CASE MITIGATION PROJECT	CONCEPT-LEVEL ESTIMATED COST (with Contingency)
15	TV HWY @ BROOKWOOD	EXTEND SOUTHBOUND LEFT-TURN STORAGE	$51,000
RTP 11136, 58	TV HWY @ 209TH AVE.	ADD EASTBOUND RIGHT-TURN LANE AND MODIFY SIGNAL ACCORDINGLY	$355,000
26	TV HWY @ 185TH AVE.	ADD DUAL LEFT-TURN LANES ON ALL APPROACHES, ADD EASTBOUND RIGHT-TURN LANE, AND MODIFY SIGNAL ACCORDINGLY	$11,967,000
80	WITCH HAZEL @ BROOKWOOD	IMPROVE INTERSECTION CAPACITY – NEW SIGNAL RIGHT-IN/RIGHT-OUT, OR ALTERNATIVE ACCESS (SIGNAL ASSUMED FOR COST)	$423,000
74	BLANTON ST. (NORTH & SOUTH) @ 198TH AVE.	COMBINE NORTH AND SOUTH INTERSECTIONS INTO SINGLE FOUR-LEG SIGNALIZED INTERSECTION WITH LEFT-TURN LANES ON ALL APPROACHES	$3,782,000
75	BLANTON ST. (NORTH & SOUTH) @ 185TH AVE.	COMBINE NORTH AND SOUTH INTERSECTIONS INTO SINGLE FOUR-LEG SIGNALIZED INTERSECTION WITH LEFT-TURN LANES ON ALL APPROACHES	$5,639,000
52	ROSEDALE RD. @ 209TH AVE.	ADD EASTBOUND RIGHT-TURN LANE	$134,000
76	FARMINGTON RD. @ 185TH AVE.	EXTEND FIVE-LANE SECTION OF 185TH AVE. TO THE SOUTH OF FARMINGTON RD. FOR 1,500 FEET AND MODIFY SIGNAL ACCORDINGLY	$3,136,000
RTP 11284	FARMINGTON RD.	WIDEN TO FIVE LANES WITH BIKE LANES AND SIDEWALKS BETWEEN 185TH AND 198TH AVENUES	$10,845,000
TOTAL COST			**$36,332,000**

WITH SOUTH HILLSBORO TRANSPORTATION MITIGATION COSTS

Table 8 shows recommended mitigation projects and their construction costs that are needed to meet operational standards with build-out development in the South Hillsboro Community Plan Area.

Table 8: South Hillsboro Plan Transportation Improvements

RTP/MAP PROJECT #	LOCATION	PROPOSED SOUTH HILLSBORO MITIGATION PROJECT	CONCEPT-LEVEL ESTIMATED COST (with Contingency)
RTP 11137, 61	TV HWY @ CENTURY BLVD./234TH AVE.	EXTENSIVE SIGNAL MODIFICATION AND MODIFY RAIL CROSSING	$756,000
69	TV HWY @ 229TH AVE.	CLOSE SOUTH LEG OF INTERSECTION (REMOVE ROADWAY AND BUILD CUL-DE-SAC) AND MODIFY SIGNAL ACCORDINGLY	$793,000
17	TV HWY @ CORNELIUS PASS RD.	ADD DUAL LEFT-TURN LANES ON ALL APPROACHES, ADD EASTBOUND, WESTBOUND AND NORTHBOUND RIGHT-TURN LANES, WIDEN AND ADJUST GRADE FOR NORTHBOUND APPROACH, AND MODIFY RAIL CROSSING AND SIGNAL ACCORDINGLY	$7,206,000

Table 8: South Hillsboro Plan Transportation Improvements

RTP/MAP PROJECT #	LOCATION	PROPOSED SOUTH HILLSBORO MITIGATION PROJECT	CONCEPT-LEVEL ESTIMATED COST (with Contingency)
19	TV HWY @ 209TH AVE.	WIDEN AND ADJUST GRADE FOR NORTHBOUND APPROACH, MODIFY RAIL CROSSING; NORTHBOUND APPROACH WOULD HAVE ONE LEFT, ONE THROUGH, ONE RIGHT, AND ADDED SECOND SOUTHBOUND THROUGH LANE	$2,393,000
47	ALEXANDER ST. @ CENTURY BLVD.	SIGNALIZE INTERSECTION	$420,000
70	ALEXANDER ST. @ 229TH AVE.	ADD EASTBOUND LEFT-TURN LANE	$531,000
48	ALEXANDER ST. @ CORNELIUS PASS RD.	ADD TURN LANE AND SIGNALIZE INTERSECTION	$577,000
49	BLANTON ST.@ 209TH AVE.	ADD WESTBOUND LEFT-TURN LANE AND SIGNALIZE INTERSECTION	$2,276,000
71	KINNAMAN RD. @ CORNELIUS PASS RD.	SIGNALIZE INTERSECTION	$420,000
50	KINNAMAN RD. @ 209TH AVE.	SIGNALIZE INTERSECTION	$420,000
72	ROSA RD. @ 229TH AVE.	INSTALL ROUNDABOUT	$2,595,000
73	ROSA RD. @ CORNELIUS PASS RD.	SIGNALIZE INTERSECTION	$420,000
51	ROSA RD. @ 209TH AVE.	SIGNALIZE INTERSECTION	$420,000
62	RIVER RD. @ ROSEDALE RD.	INSTALL ROUNDABOUT	$2,555,000
63	ROSEDALE RD. @ 229TH AVE.	ADD EASTBOUND LEFT-TURN LANE	$318,000
64	ROSEDALE RD. @ CORNELIUS PASS RD.	INSTALL ROUNDABOUT	$2,603,000
52	ROSEDALE RD. @ 209TH AVE.	SIGNALIZE INTERSECTION	$420,000
77	FARMINGTON RD. @ 209TH AVE.	ADD SECOND SOUTHBOUND LEFT-TURN LANE, ADD SOUTHBOUND RIGHT-TURN LANE, AND MODIFY SIGNAL ACCORDINGLY	$496,000
21	TV HWY @ 198TH AVE.	ADD A SECOND WESTBOUND LEFT-TURN LANE, ADD A SOUTHBOUND RIGHT-TURN LANE, CONVERT NORTHBOUND TO A LEFT-TURN LANE, THROUGH LANE, AND THROUGH/RIGHT-TURN LANE, AND MODIFY SIGNAL ACCORDINGLY	$1,307,000
26	TV HWY @ 185TH AVE.	ADD WESTBOUND RIGHT-TURN LANE	$126,000
78	KINNAMAN RD. (NORTH & SOUTH) @ 198TH AVE.	COMBINE NORTH AND SOUTH INTERSECTIONS INTO SINGLE FOUR-LEG SIGNALIZED INTERSECTION	$4,342,000
N/A	MISCELLANEOUS INTERSECTIONS	SIGNALIZE INTERSECTION	$6,300,000
RTP 10844, 60	CORNELIUS PASS RD.	EXTEND FIVE-LANE SECTION FROM TV HWY TO ROSEDALE RD.	$26,373,000
RTP 11137, 61	CENTURYBLVD./ 234TH AVE.	WIDEN FROM THREE/FOUR LANES TO FIVE LANES FROM JOHNSON TO ALEXANDER ST.	$989,000

Table 8: South Hillsboro Plan Transportation Improvements

RTP/MAP PROJECT #	LOCATION	PROPOSED SOUTH HILLSBORO MITIGATION PROJECT	CONCEPT-LEVEL ESTIMATED COST (with Contingency)
RTP 11274	CENTURY BLVD./234TH AVE.	NEW THREE-LANE ROAD FROM MICINNIS TO DAVIS	$5,394,000
57	209TH AVE.	WIDEN FROM TWO/THREE LANES TO FIVE LANES FROM TV HWY TO FARMINGTON RD.	$27,391,000
RTP 11273	ALEXANDER ST./BLANTON ST.	EXTEND THREE-LANE ROAD FROM 229TH TO 209TH AVENUES	$11,141,000
RTP 11272	KINNAMAN RD.	EXTEND THREE-LANE ROAD FROM CENTURY BLVD./234TH TO 209TH AVENUES	$14,468,000
44	ROSA RD.	EXTEND TWO-LANE ROAD FROM 229TH TO 209TH AVENUES.	$8,304,000
RTP 11285	FARMINGTON RD.	WIDEN FROM TWO/THREE LANES TO FIVE LANES WITH BIKE LANES AND SIDEWALKS FROM 198TH TO 209TH AVENUES	$6,590,000
81	198TH AVE.	WIDEN TO FIVE LANES FROM TV HWY TO ALEXANDER ST.	$745,000
67	229TH AVE.	WIDEN TO THREE LANES FROM MCINNIS TO ROSEDALE RD.	$4,842,000
83	229TH AVE.	ADD BIKE LANES AND SIDEWALKS FROM MCINNIS TO ALEXANDER ST.	$3,276,000
66	ROSEDALE RD.	WIDEN TO THREE LANES FROM 229TH TO 209TH AVENUES	$9,530,000
68	ROSEDALE RD.	ADD RURAL SHOULDER IMPROVEMENTS FROM RIVER RD. TO 229TH AVE.	$6,450,000
N/A	GORDON CREEK CROSSINGS	ADD TWO BOX CULVERTS	$745,000
N/A	BUTTERNUT CREEK CROSSINGS	ADD TWO NEW BRIDGES AND WIDEN ONE EXISTING BRIDGE	$16,800,000
N/A	BUTTERNUT CREEK TRIBUTARY CROSSINGS	ADD TWO BOX CULVERTS AND WIDEN ONE EXISTING CULVERT	$1,092,000
N/A	ROSEDALE CREEK CROSSING	ADD ONE BOX CULVERT	$420,000
TOTAL COST			**$182,244,000**

FOCUS AREA PLAN ACCESS MANAGEMENT POLICY

DEFINITION AND PURPOSE

Access management is a set of measures and techniques that the state can use to control access to a highway that extend the operational life of the facility by reducing congestion, improving traffic flow, reducing crashes, and reducing conflicting vehicle movements. Access management is an essential tool for maintaining capacity, traffic flow, and safety of the highway system. Implementation of effective access management has two primary effects: (1) protecting the public investment in highway facilities, and (2) enabling them to accommodate traffic volumes safely and efficiently into the future while ensuring circulation necessary for good access to the highway. This policy acknowledges the vital need of property owners adjacent to TV Hwy to maintain roadway access to their businesses and residences. However, a proliferation of driveways and minor street intersections along a highway can drastically increase conflicts and safety issues, causing operational problems, reducing the capacity of intersections, and generally degrading service for all system users. Hence, the access management policy must balance the competing needs of compatible land uses, private access, and the function of the transportation system.

Although access management imposes some restrictions and reduction of access for property along this highway, access management actions in this plan do not prevent the properties from being used and developed in a manner consistent with their adopted comprehensive planning designations. Access management instead will help to ensure that property owners continue to be able to utilize site advantages of the properties by improving traffic circulation, mobility, and safety.

The access management measures identified in this plan represent medium- and long-term actions that may be triggered as land use changes occur (new development or redevelopment), as future transportation facility improvement projects are implemented, or as safety and operational issues arise.

EXISTING APPROACHES ALONG TV HIGHWAY IN THE FOCUS PLAN AREA

TV Hwy has 35 to 45 mile per hour (mph) speed limits along the segments covered by the FAP. The majority of the land use along TV Hwy, especially on the north side, has been developed with approaches directly off of TV Hwy. There are 23 approaches in the Focus Plan Project Area on the north side of TV Hwy and 12 on the south side. **Table 9** provides a summary of the average approach density along TV Hwy.

Table 9: TV Highway Approach Density in and near the Focus Plan Project Area

		NORTH SIDE AVERAGE ACCESS DENSITY	SOUTH SIDE AVERAGE ACCESS DENSITY
FROM	TO		
MAIN ST.	BROOKWOOD AVE.	21 APPROACHES PER MILE	<5 APPROACHES PER MILE
BROOKWOOD AVE.	209TH AVE.	11 APPROACHES PER MILE	6 APPROACHES PER MILE
209TH AVE.	170TH AVE.	30 APPROACHES PER MILE	4 APPROACHES PER MILE

STATE STANDARDS

The 1999 Oregon Highway Plan (OHP—March 2012[7]) and Oregon Administrative Rule (OAR) 734-051 (Division 51): Highway Approaches, Access Control, Spacing Standards, and Medians[8] contain minimum spacing standards for private driveway and public road approach spacing based on highway classifications and speeds.

In terms of highway classification, the OHP designates TV Hwy as a Statewide National Highway System (NHS) highway. TV Hwy is on the National Network. Oregon Revised Statute (ORS) 366.215 (2) establishes that "the vehicle-carrying capacity of an identified freight route [may not be reduced] when altering, relocating, changing or realigning a state highway unless safety or access considerations require the reduction." The statutes do not define "vehicle-carrying capacity," but the intent is to maintain overall corridor operations and acceptable geometric conditions to ensure that truck freight and oversized loads using the TV Hwy Corridor currently will be able to use it in the future and that TV Hwy is consistent with local and regional freight goals and the state statute.

The OARs governing approaches and access control specify that the spacing standards do not apply to approaches in existence prior to January 1, 2012, except for changes in use, new approach requests, infill development or redevelopment, and highway construction projects. The specific language from Division 51 is:

> *OAR 734-051-4020, Standards and Criteria for Approval of Private Approaches:*
>
> > *(8)(c) The spacing standards in Tables 3 through 6 do not apply to approaches in existence prior to January 1, 2012, except when:*
> >
> > > *(A) A new approach road is requested or an existing approach permit is subject to change of use under ORS 374.312 and*
> > >
> > > *(B) Where infill development or infill redevelopment occurs the approach road spacing standards will be a department determination; the department shall determine whether the approach road spacing or safety is improved by moving in the direction of the spacing standards in Tables 3 through 6; and*
> > >
> > > *(C) Where a highway or interchange project occurs the approach road spacing standard will be a department determination; the department shall consider whether the approach road spacing or safety is improved by moving in the direction of the applicable spacing standards in Tables 3 through 6.*

Under these circumstances, ODOT "shall determine whether the approach road spacing or safety is improved by moving in the direction of the spacing standards." All of the approaches onto TV Hwy within the Focus Plan Project Area existed prior to January 1, 2012.

Table 10 identifies the applicable spacing standards for TV Hwy in the Focus Plan Project Area. However, the standards only apply when there is no acting management plan for the area decided on between

[7] *1999 Oregon Highway Plan Revisions to Address Senate Bill 264 (2011) Policy 3A, website: http://www.oregon.gov/ODOT/TD/TP/docs/ohp_am/accessm.pdf*

[8] *Oregon Administrative Rules Chapter 734, Division 51, Highway Approaches, Access Control, Spacing Standards, and Medians, Temporary Rules Effective January 1, 2012, Amended May 3, 2012, website: http://www.oregon.gov/ODOT/HWY/ACCESSMGT/docs/pdf/734-051.pdf*

ODOT and the local jurisdiction.[9] Until an access management plan is adopted for TV Hwy within the Focus Plan Project Area, the standards from the OHP, shown in **Table 10**, apply.

Table 10: OHP Approach Standards

POSTED SPEED	APPROACH SPACING
30 TO 35 MPH	500 FEET
40 TO 45 MPH	800 FEET

WASHINGTON COUNTY STANDARDS

Washington County designates TV Hwy as a Truck Route and Principal Arterial. Within the Focus Plan Project Area, the north side of TV Hwy between SW 198th and SW 209th Avenues is subject to the Washington County Aloha-Reedville-Cooper Mountain Community Plan Access Management Plan (see **Appendix I**). The spacing standards are 240 feet in zones posted for 35 mph and 360 feet for 45 mph. There is a 150-foot intermediate standard that allows shared access. Driveways must be more than 200 feet from major signalized intersections. The application of these standards is triggered by new development or redevelopment, as defined in the plan.

Section 501-8.5 of the Washington County Community Development Code includes access spacing standards:

> *B. Roadway Access:*
> *No use will be permitted to have direct access to a street or road except as specified below, or as provided in Section 501-8.5 E. (Interim Access). Access spacing shall be measured from existing or approved accesses on either side of a street or road.*
>
> > *4) Arterials*
> > *Direct access to arterial roads shall be from collector or other arterial streets. Exceptions for local streets and private accesses may be allowed through a Type II process when collector access is found to be unavailable and impracticable by the Director. Access to arterials shall comply with the following standards:*
> >
> > > *(a) Arterials*
> > > *Direct access to an arterial will be permitted provided that Point 'A' of such access is more than six hundred (600) feet from any intersection Point 'A' or other access to that minor arterial (Point 'C').*
> > >
> > > *(b) Principal Arterials*
> > > *Principal Arterials shall be designed and developed as limited access facilities. Access to a Principal Arterial is subject to approval by ODOT through the State's Access Management Policy and its implementing measures. Access to Tualatin Valley Highway, between SW 170th and SW 209th Avenues, is subject to the provisions of the TV Highway Access*

[9] Oregon Highway Plan, Appendix C, Access Management Standards Revisions – 2011, Table 14: Access Management Spacing Standards For Statewide Highways With Annual Average Daily Traffic (AADT) Of More Than 5,000.

Management Plan contained in the Aloha-Reedville-Cooper Mountain Community Plan.

CITY OF HILLSBORO STANDARDS

The City of Hillsboro designates TV Hwy as a Principal Arterial and a Transit/Mixed-Use Corridor. The City of Hillsboro TSP and zoning ordinance do not outline specific access spacing standards for TV Hwy. However, existing TSP policies and ordinance provisions do provide a framework for implementing state standards. TSP policies provide standards of jurisdictional coordination. The ordinance establishes traffic impact analysis requirements that require identification of access improvements as mitigation, if necessary. **Appendix I** includes applicable Washington County standards and provides excerpts from City of Hillsboro plans and codes that may provide implementation of access management in the development review process.

ACCESS MANAGEMENT TECHNIQUES AND IMPLEMENTATION

Access management techniques applicable to the FAP include:

- ***Managing Driveway Spacing to Meet Standards***: Fewer driveways spaced farther apart can allow for more orderly merging of traffic and present fewer challenges to drivers.
- ***Adding Turning Lanes***: Dedicated left- and right-turn lanes keep through-traffic flowing.
- ***Installing Median Treatments***: Two-way left-turn lanes and non-traversable, raised medians are some of the most effective means to regulate access and reduce accidents.
- ***Improving the Local Street Network***: Local system improvements provide access to property, ensure sufficient capacity for development to occur, and can reduce the demand of local traffic on the highway system.

The FAP and the TVCP call for local street network enhancements north and south of TV Hwy. Directing and redirecting access to the local street network will greatly increase the distance between the approach points, thus reducing access conflicts and improving safety along TV Hwy. It also provides the framework to allow land in the Focus Plan Project Area to redevelop with more intense land uses, as identified in the South Hillsboro Community Plan and City of Hillsboro and Washington County zoning and development codes. Although the FAP does not include preliminary design that will be needed to develop specific access management applications at an individual property level, it does recommend plan and code amendments to enable future applications of access management techniques.

Proposed development and improvement projects and land use changes along TV Hwy will require approach permits from ODOT. Permit applicants must demonstrate compliance or movement towards compliance with the standards applicable to this corridor. In accordance with Division 51, access management plans, where adopted, must be used to evaluate development proposals and may be used to determine mitigation for development proposals.

Access management should be considered when any of the following two conditions are met:

- Properties develop or redevelop and when reasonable access can be provided with a single approach point or via a local street.
- The annual crash rate is 20 percent greater than the statewide rate for similar roadways or a section has an ODOT Safety Priority Index System (SPIS) rating in the top 10 percent.

Ideally, a project will include provisions by which access within the project limits can be made fully compliant with the applicable spacing standards. In many instances, however, access needed for existing development will not allow these standards to be met. When the requirements and standards cannot be met, progress toward meeting the applicable standards must be demonstrated. Requests for deviations from these standards can be made, and the process is outlined in OAR 734-051-3050[10].

POTENTIAL PLAN AND CODE AMENDMENTS

ODOT, the City, and Washington County should review access management and high capacity transit needs for the Focus Plan Project Area before adopting local plan amendments or as part of local land use actions.

CITY OF HILLSBORO TSP ACCESS MANAGEMENT PLAN AMENDMENT

The following provision (underlined) in Policy 4 is recommended to be added to the TSP that would be further implemented through the development code and the development review process.

Policy 4. Implement access management standards for arterial and collector roadways consistent with city, county and state requirements.

(i) The City of Hillsboro shall coordinate with ODOT…. (ii) The function of the Cornelius Pass….

<u>(iii) The City of Hillsboro shall coordinate with ODOT in the evaluation of any land use applications that would affect a state transportation facility. The following access management standards will apply: a). No new driveway approach onto a state transportation facility, except when no alternative access is available. b). Where a property abuts a state transportation facility and another roadway, the access for the property shall be located on the other roadway, not on the state transportation facility, unless an approach on the other roadway would create safety or operations problems, in which case the approach shall be right-in, right-out. c). Limit driveways to right-in, right-out (where appropriate) through raised medians or other barriers to restrict left turns. d). Create shared approaches for multiple properties, where appropriate, to reduce the number of driveways with access to a state transportation facility.</u>

CITY OF HILLSBORO ZONING ORDINANCE

The following development code language (underlined) could be used to implement access management standards for state transportation facilities as part of the development review process.

Hillsboro Zoning Ordinance No. 1945: Volume I

Section 95. Access. Every lot zoned R-7, R-8.5, R-10, or A-1 shall abut a public street other than an alley for a width of at least 12 feet. When two to six adjacent single-family residential lots are proposed, then each lot must abut a public street other than an alley for a width of at least 8 feet. When two to four adjacent lots zoned A-1 are proposed, each lot shall abut a public street other than an alley for a width of at least 10 feet. Every lot zoned A-2, A-4, A-3, C-4, C-F, C-2, C-1, M-2, and M-P shall abut a public street other than an alley for a width of at least 25 feet. Property abutting the end of a public street not terminating in a cul-de-sac shall not be considered as having access. The

[10] *OAR 734-051-3050 Deviations from Approach Road Spacing, Sight Distance, and Channelization Standards for a Private Approach.*

minimum width of the access strip portion of every lot must equal the frontage requirement applicable as set forth herein. (Amended by Ord. No. 3288/12-81.)

Section 95.a Access Management onto a State Transportation Facility

The purpose of this section is to promote the development of safe, convenient, and economic transportation system and to preserve the safety and capacity of the street system by limiting conflicts resulting from uncontrolled driveway access, street intersections, and turning movements while providing for appropriate access for all properties.

(1) Applicability

(a) This chapter applies to all developments, permit approvals, land use approvals, partitions, subdivisions, or any other actions taken by the City pertaining to property abutting any state transportation facility. In addition, any parcel not abutted by a state transportation facility, but having access to a state transportation facility by any easement or prescriptive right, shall be treated as if it did abut the state transportation facility and this section applies.

(2) Approval Process for Access onto a State Transportation Facility

(a) All requests for access onto state transportation facilities will go through the process outlined in Section 133 Development Review.

(3) Existing Driveways and Access

(a) Existing driveways with access to a state transportation facility on the date this chapter was originally adopted shall be allowed to remain. If additional development occurs on properties with existing driveways with access onto a state transportation facility, then this chapter applies and the entire site shall be made to conform to the requirements of this chapter.

(b) The City Engineer may restrict existing driveways and street intersections to right-in and right-out by construction of raised median barriers or other means.

(c). Alternate Access. All properties which abut a state transportation facility and another public road or street shall not have access on the state transportation facility unless approved by the City Engineer.

HIGH CAPACITY TRANSIT AND OTHER PLANNED TRANSPORTATION SYSTEM IMPROVEMENTS

The Metro 2035 RTP identifies Beaverton to Hillsboro in the vicinity of TV Hwy as a next phase regional priority High Capacity Transit (HCT) corridor. Metro defines next phase regional priority corridors as *corridors where future HCT investment may be viable if recommended planning and policy actions are implemented*. Metro defines HCT as follows:

> *High capacity transit is defined by its function: to carry high volumes of passengers quickly and efficiently from one place to another. Other defining characteristics of HCT service include the ability to bypass traffic and avoid delay by operating in exclusive or semi-*

exclusive rights of way, faster overall travel speeds due to wide station spacing, frequent service. High capacity transit includes options such as light rail, commuter rail and bus rapid transit; these and others will be examined as part of the High Capacity Transit System Plan.

TV Hwy is also designated as a Metro 2040 Transit Mixed-Use Corridor which is shown on the City of Hillsboro TSP Pedestrian Master Plan, Figure 1-2.

The City of Hillsboro TSP states on page 4-18:

The City of Hillsboro Development Code regulations should require new development in the pedestrian districts and transit/mixed use corridors to comply with the RTP….

The TVCP establishes the function and design of TV Hwy as a five-lane arterial, with recommended addition of supplemental turn lanes at multiple intersections. The TVCP also recommends an Alternatives Analysis to study and determine the appropriate long-term HCT solution for the TV Hwy corridor. With the TVCP's proposed reduction from the City of Hillsboro's and Washington County's future seven-lane designation, the City and County need a policy-based mechanism to ensure that adequate ROW will be available to accommodate implementation of HCT and intersection improvements along TV Hwy.

In order to preserve potential ROW for HCT prior to and during the TVCP recommended HCT study, the setbacks along TV Hwy should be incorporated into the City's South Hillsboro Community Plan implementation and into the County's TSP. Suggested plan amendment provisions are provided below.

TV Highway High Capacity Transit and Intersection Upgrades Setback Implementation.

A. Purpose. It is the purpose of this provision to enable and establish appropriate right-of-way for reservation and for future dedication to protect the vested interest of the public and future ability of TV Highway to effectively function as a High Capacity Transit Corridor, to implement the TV Highway Corridor Plan (TVCP), and to minimize property impacts and acquisitions associated with implementation. i) For property abutting the north side of TV Highway, additional building setbacks may be required based on the necessary increased right-of-way width to accommodate future High Capacity Transit and supporting uses. ii) For properties abutting both sides of TV Highway 500 feet from intersecting arterial roadways, additional width may be required to accommodate planned intersection improvements.
B. Where required. i) On all sites abutting the north side of TV Highway regardless of base zone; and ii) properties abutting both sides of TV Highway 500 feet from intersecting arterial roadways regardless of base zone.

   Standards. i) For a lot or parcel abutting the north side TV Highway, the minimum right-of-way width for development setback purposes shall be 61 feet from the TV Highway centerline. ii) For a lot or parcel abutting either side of TV Highway within 500 feet of an intersecting arterial roadway, the minimum right-of-way width for development setback purposes shall be determined through more detailed engineering study or specified by the Planning Director. The building setback line will be measured from these points based on the standard of the applicable underlying zone or other applicable zoning unless otherwise specified by the Planning Director. These special setbacks apply to buildings and parking to fulfill zoning or development code requirements, but do not apply to temporary or accessory structures such as food carts, fences, landscaping, or supplemental parking.

IMPLEMENTATION AND NEXT STEPS

Adoption of the FAP will enable the City of Hillsboro and partner agencies to comply with applicable agency planning requirements and provide for the future planning, development, and management of the transportation system within the Focus Plan Project Area. This FAP will be used by the City, Washington County, and ODOT as a planning tool to guide the future planning and management of the transportation system in the Focus Plan Project Area. The FAP will allow the City to accommodate growth in the Focus Plan Project Area with a better connected network of streets and provide for a livable community. ODOT does not need to take any implementation actions regarding the FAP. The Oregon Transportation Commission (OTC) will adopt the TVCP as a facility plan. Metro does not need to take any implementation actions regarding the FAP. Metro will amend the RTP to change the functional classification of TV Hwy from a Principal Arterial to an Arterial. Washington County does not need to take any implementation actions regarding the FAP, because its access management provisions are adequate and implementation of the HCT setbacks will occur with the adoption of the TVCP into Washington County's TSP. Washington County will coordinate with City of Hillsboro on the financing strategy to satisfy the Transportation Overlay. Washington County will also incorporate the FAP's proposed roads, roadway alignment changes, and lane number changes into its Transportation System Plan (TSP) update process, with adoption in 2014. The City of Hillsboro implementation actions are to:

- Integrate the FAP into the TSP update that the City will conduct soon, including the new access management provision for Policy 4;
- Effectively adopt the FAP when it adopts the TSP update;
- Develop a comprehensive funding strategy required to satisfy the Transportation Overlay (Hillsboro Comprehensive Plan Section 31(I);
- Amend Hillsboro Zoning Ordinance No. 1945: Volume I, Section 95, to include the language proposed in the access management section of this FAP; and
- Recommend for the federally financially constrained plan the improvements needed to meet ODOT mobility targets (shaded in gray in Table 4 and Table 5).

Draft Final South Hillsboro Focus Area Plan APPENDICES

A plan to address anticipated future multimodal transportation needs in the Tualatin-Valley Highway (TV Hwy) Corridor Area

This project is partially funded by a grant from the Transportation and Growth Management (TGM) Program, a joint program of the Oregon Department of Transportation and the Oregon Department of Land Conservation and Development. This TGM grant is financed, in part, by the federal Safe, Accountable, Flexible, Efficient Transportation Equity Act: A Legacy for Users (SAFETEA-LU), local government, and the State of Oregon Funds.

Prepared by:

David Evans and Associates, Inc.
2100 SW River Parkway
Portland, Oregon 97201

Prepared for:

City of Hillsboro
150 East Main St.
Hillsboro, Oregon 97123-4028

and

Oregon Department of Transportation
123 NW Flanders Street
Portland, Oregon 97209

June 2013

CONTENTS

Appendix A: TV Highway Corridor Plan (TVCP) Goals
Appendix B: 2035 Traffic Volumes without South Hillsboro
Appendix C: 2035 Traffic Volumes with South Hillsboro
Appendix D: Arterial v. Throughway Issue Paper
Appendix E: 2035 Traffic Operations Base Case without South Hillsboro
Appendix F: 2035 Traffic Operations Mitigated without South Hillsboro
Appendix G: 2035 Traffic Operations with South Hillsboro
Appendix H: 2035 Traffic Operations Mitigated with South Hillsboro
Appendix I: Access management Plans, Policies and Code

Appendix A: TV Highway Corridor Plan (TVCP) Goals

The TV Highway Corridor Plan (TVCP) is consistent with:

- The Oregon Transportation Planning Rule (TPR)
- Oregon Highway Plan (OHP)
- Regional Transportation Plan (RTP) Congestion Management Process (section 6.4)
- RTP Mobility Corridor #24 Strategy (section 4.2.25)
- Regional Transportation Functional Plan (RTFP), including Title 1 System Design and Section 3.08.220 Transportation Solutions

The TVCP was developed to support the nine TVCP implementation goals that the TVCP (PG) adopted and that are consistent with the RTP (see Table 1).

Table 1: TVCP Goals and Objectives

TVCP Implementation Goals	Objectives	Applicable RTP Goal(s)
1. Improve mobility for multimodal travel through and within the TVCP Project Area	1A. Provide travel time reliability for transit 1B. Provide travel time reliability for autos and trucks 1C. Maintain mobility for trucks and over-dimensional vehicles on TV Hwy 1D. Maintain rail corridor for freight operations 1E. Minimize travel times for autos, trucks, transit, bicyclists, and pedestrians	*Goal 2: Sustain Economic Competitiveness and Prosperity* *Goal 3: Expand Transportation Choices* *Goal 4: Emphasize Effective and Efficient Management of the Transportation System*
2. Enhance connectivity and accessibility to key destinations within the TVCP Project Area for pedestrians, bicyclists, transit, automobile, and freight users	2A. Provide a well-connected network of streets, pedestrian, and bicycle facilities to safely and comfortably accommodate all users (see RTFP 3.08.110-140 for guidance) 2B. Complete the arterial, collector, and local street system (see RTFP 3.08.110 for guidance) 2C. Complete the pedestrian system (sidewalks, crossings, and pathways) (see RTFP 3.08.130 for guidance) 2D. Complete the bicycle system (on-street and off-street bikeways and crossings) (see RTFP 3.08.140 for guidance) 2E. Complete the regional transit system (see RTFP 3.08.120 for guidance)	*Goal 2: Sustain Economic Competitiveness and Prosperity* *Goal 3: Expand Transportation Choices* *Goal 5: Enhance Safety and Security*
3. Enhance safety for all users and modes along and across TV Hwy	3A. Increase community awareness of safety issues and safe travel behavior in the TVCP Project Area 3B. Reduce potential for severe crashes for all modes 3C. Enhance conditions for reliable emergency service responsiveness	*Goal 2: Sustain Economic Competitiveness and Prosperity* *Goal 3: Expand Transportation Choices* *Goal 5: Enhance Safety and Security* *Goal 9: Ensure Fiscal Stewardship*
4. Strengthen and support economic vitality and well-being	4A. Develop solutions that support economic vitality 4B. Improve freight and worker access to industrial and employment areas	*Goal 2: Sustain Economic Competitiveness and Prosperity* *Goal 9: Ensure Fiscal Stewardship*
5. Improve the visual appearance of TV Hwy	5. Incorporate visual amenities (i.e., streetscaping and vegetation/landscaping) within the TV Hwy right-of-way	*Goal 1: Foster Vibrant Communities and Efficient Urban Form* *Goal 6: Promote Environmental Stewardship*

TVCP Implementation Goals	Objectives	Applicable RTP Goal(s)
6. Promote environmental stewardship	6A. Improve the air quality in the corridor 6B. Minimize impacts to stream corridors, wetlands, and upland habitat 6C. Improve water quality in the corridor	*Goal 6: Promote Environmental Stewardship*
7. Reduce per person and/or overall vehicle miles traveled (VMT) in the TVCP Project Area	7A. Increase pedestrian mode share compared to 2010 7B. Increase bicycle mode share compared to 2010 7C. Increase transit mode share compared to 2010 7D. Reduce travel share by single-occupant vehicles (SOVs)	*Goal 3: Expand Transportation Choices*
8. Demonstrate fiscal and financial responsibility	8. Develop cost-effective solutions (comprehensive and long-term, considering capital, operations, maintenance, and other applicable Least Cost Planning factors)	*Goal 9: Ensure Fiscal Stewardship*
9. Be consistent with state and regional comprehensive strategies to reduce greenhouse gas (GHG) emissions	9. Reduce transportation-related GHG emissions in the TVCP Project Area	*Goal 6: Promote Environmental Stewardship* *Goal 7: Enhance Human Health*

Appendix B: 2035 Traffic Volumes without South Hillsboro

Project: South Hillsboro Focus Area Plan
Job #: ODOT 0000-0737
Subject: ***AM Build Turning Movement Volumes***
Created: 6/8/2011
Rev. Date: 3/4/2013

Less than Existing Less than TV Hwy Base

Int No.	Synchro ID	Intersection	Direction	Movement	2,011 Existing BALANCED DHV 1-Hr Volume AM Peak	2010 Hillsboro Model Turn Volumes	41,316 2035 w/o SoHi Model Turn Volumes	2035 SoHi - 2010 Turn Vol Diff	2035 SoHi Network Unbalanced	Difference (Volume Adjustment)	2035 SoHi Network Adjusted	Vol Balance - Combined Internal + External	2035 SoHi Network Balanced w/229th
1	10	TV Highway @ SE River Rd.*		EBL	5	0	0	0	5		5		5
	10	2 hr AM Turning Movement Count	EB	EBT	695	597	607	10	705		705		705
	10	Count Date: 5/25/2010		EBR	275	242	244	2	275		275		275
	10	2010		WBL	30	0	0	0	30		30		30
	10		WB	WBT	905	843	1,124	281	1,185		1,185		1,185
	10			WBR	20	20	35	15	35		35		35
	10			NBL	290	381	406	25	315		315		315
	10		NB	NBT	95	137	296	159	255		255		255
	10			NBR	10	83	110	27	35		35		35
	10			SBL	45	34	26	(8)	35	10	45		45
	10		SB	SBT	95	20	19	(1)	95	5	100		100
	10			SBR	5	0	0	0	5		5		5
			TEV	**TEV**	**2,470**	**2,357**	**2,867**	**510**	**2,975**	**15**	**2,990**	**0**	**2,990**
13	25	Witch Hazel at Brookwood		EBL			369		370		370	(45)	325
	25		EB	EBT			0	5	5		5	0	5
	25	This intersection was balanced off the		EBR			16		15		15	0	15
	25	neighboring intersections and the combination		WBL			0	5	5		5	0	5
	25	of the surrounding SoHi area as well as the	WB	WBT			0	5	5		5	0	5
	25	SoHi area as well as the internal area. It did not		WBR			0	5	5		5	0	5
	25	go through the volume development process.		NBL			10		10		10	0	10
	25		NB	NBT			467		465		465	(80)	385
	25			NBR			0	5	5		5	0	5
	25			SBL			0	5	5		5	0	5
	25		SB	SBT			165		165		165	(15)	150
	25			SBR			280		280		280	(20)	260
			TEV	**TEV**	**0**	**0**	**1,307**	**30**	**1,335**	**0**	**1,335**	**(160)**	**1,175**
14	80	SE Alexander St. @ SE Brookwood Rd.		EBL	85	0	117	117	200		200		200
	80	2 hr AM Turning Movement Count	EB	EBT	90	0	10	10	100		100		100
	80	Count Date: 5/24/2011		EBR	5	0	0	0	5		5		5
	80	2011		WBL	5	0	3	3	10		10		10
	80		WB	WBT	15	0	0	0	15		15		15
	80			WBR	35	85	66	(19)	15	20	35		35
	80			NBL	0	0	0	0	0		0		0
	80		NB	NBT	140	207	293	86	225		225		225
	80			NBR	40	0	33	33	75		75		75
	80			SBL	35	28	74	46	80		80		80
	80		SB	SBT	145	158	107	(51)	95	55	150		150
	80			SBR	30	0	0	0	30		30		30
			TEV	**TEV**	**625**	**478**	**703**	**225**	**850**	**75**	**925**	**0**	**925**
18	120	SW 209th Ave. @ SW Blanton Rd.		EBL	0	0	0	0	0		0	0	0
	120	2 hr PM Turning Movement Count	EB	EBT	0	0	0	0	0		0	0	0
	120	Count Date: 5/20/2010		EBR	0	0	0	0	0		0	0	0
	120	2010		WBL	10	0	2	2	10		10	0	10
	120		WB	WBT	0	0	0	0	0		0	0	0
	120			WBR	35	0	99	99	135		135	5	140
	120			NBL	0	0	0	0	0		0	0	0
	120		NB	NBT	590	599	791	192	780		780	50	830
	120			NBR	30	0	2	2	30		30	0	30
	120			SBL	35	0	7	7	40		40	(5)	35
	120		SB	SBT	390	347	319	(28)	360	30	390	0	390
	120			SBR	0	0	0	0	0		0	0	0
			TEV	**TEV**	**1,090**	**946**	**1,220**	**274**	**1,355**	**30**	**1,385**	**50**	**1,435**
23	150	SW 209th Ave. @ SW Kinnaman Rd.		EBL	0	0	0	0	0		0	0	0
	150	2 hr PM Turning Movement Count	EB	EBT	0	0	0	0	0		0	0	0
	150	Count Date: 5/18/2010		EBR	0	0	0	0	0		0	0	0
	150	2010		WBL	15	6	1	(5)	10	5	15	15	30
	150		WB	WBT	0	0	0	0	0		0	0	0
	150			WBR	60	94	197	103	165		165	0	165
	150			NBL	0	0	0	0	0		0	0	0
	150		NB	NBT	550	472	568	96	645		645	50	695
	150			NBR	20	7	3	(4)	15	5	20	0	20
	150			SBL	0	24	24	0	0		0	0	0
	150		SB	SBT	360	182	163	(19)	340	20	360	40	400
	150			SBR	0	0	0	0	0		0	0	0
			TEV	**TEV**	**1,005**	**785**	**956**	**171**	**1,175**	**30**	**1,205**	**105**	**1,310**

Project: South Hillsboro Focus Area Plan
Job #: ODOT 0000-0737
Subject: ***AM Build Turning Movement Volumes***
Created: 6/8/2011
Rev. Date: 3/4/2013

Less than Existing Less than TV Hwy Base

Int No.	Synchro ID	Intersection	Direction	Movement	2,011 Existing BALANCED DHV 1-Hr Volume AM Peak	2010 Hillsboro Model Turn Volumes	41,316 2035 w/o SoHi Model Turn Volumes	2035 SoHi - 2010 Turn Vol Diff	2035 SoHi Network Unbalanced	Difference (Volume Adjustment)	2035 SoHi Network Adjusted	Vol Balance - Combined Internal + External	2035 SoHi Network Balanced w/229th
28	180	SW 209th Ave. @ SW Rosa Rd.		EBL	0	0	0	0	0		0	0	0
	180	2 hr AM Turning Movement Count	EB	EBT	0	0	0	0	0		0	0	0
	180	Count Date: 4/1/2008		EBR	0	0	0	0	0		0	0	0
	180	2008		WBL	40	4	25	21	60		60	0	60
	180		WB	WBT	0	0	0	0	0		0	0	0
	180			WBR	70	0	113	113	185		185	0	185
	180			NBL	0	0	0	0	0		0	0	0
	180		NB	NBT	565	474	449	(25)	540	25	565	(35)	530
	180			NBR	10	4	0	(4)	5	5	10	0	10
	180			SBL	25	0	47	47	70		70	0	70
	180		SB	SBT	375	187	116	(71)	305	75	380	(20)	360
	180			SBR	0	0	0	0	0		0	0	0
			TEV	**TEV**	**1,085**	**669**	**750**	**81**	**1,165**	**105**	**1,270**	**(55)**	**1,215**
32	220	SW Rosedale Rd. @ SW 209th Ave.		EBL	20	23	23	0	20		20	0	20
	220	2 hr AM Turning Movement Count	EB	EBT	10	0	0	0	10		10	0	10
	220	Count Date: 5/18/2010		EBR	60	151	185	34	95		95	0	95
	220	2010		WBL	5	0	0	0	5		5	0	5
	220		WB	WBT	15	0	0	0	15		15	0	15
	220			WBR	15	0	0	0	15		15	0	15
	220			NBL	195	293	440	147	340		340	0	340
	220		NB	NBT	375	356	439	83	460		460	60	520
	220			NBR	5	0	0	0	5		5	0	5
	220			SBL	15	0	0	0	15		15	0	15
	220		SB	SBT	290	221	115	(106)	185	105	290	(10)	280
	220			SBR	60	109	173	64	125		125	0	125
			TEV	**TEV**	**1,065**	**1,153**	**1,375**	**222**	**1,290**	**105**	**1,395**	**50**	**1,445**

Project: South Hillsboro Focus Area Plan
Job #: ODOT 0000-0737
Subject: *AM Turning Movement Volumes*
Created: 7/21/2012
Rev. Date: 3/4/2013

Int. No	Synchro ID	Intersection	Direction	Movement	2011 Final Balanced Volumes for Synchro - AM Peak	Direction Correction: 2035 Baseline NCHRP 255-Link Unbalanced	2010 UGB: 2035 Baseline NCHRP 255-Link Unbalanced	No Hi + South Cooper Mtn Volumes	2035 Unbalanced	Vol Balance	2035 Balanced Volumes	Vol Balance - Combined Internal + External	2035 SoHi Network Balanced w/229th
2	13	TV Highway @ SE Cypress St.		EBL	45	60	60	0	60	0	60		60
	13	2 hr AM Turning Movement Count	EB	EBT	620	598	620	0	620	0	620		620
	13	Count Date: 5/20/2010		EBR	50	64	65	0	65	0	65		65
	13	2010		WBL	90	92	90	0	90	10	100		100
	13		WB	WBT	675	876	875	0	875	25	900		900
	13			WBR	45	48	50	0	50	30	80		80
	13			NBL	90	151	150	0	150	0	150		150
	13		NB	NBT	205	286	285	0	285	0	285		285
	13			NBR	140	141	140	0	140	0	140		140
	13			SBL	105	65	105	0	105	0	105		105
	13		SB	SBT	210	172	210	0	210	0	210		210
	13			SBR	45	47	50	0	50	0	50		50
			TEV		**2,320**	**2,600**	**2,700**	**0**	**2,700**	**65**	**2,765**	**0**	**2,765**
3	20	TV Highway @ SE Brookwood Ave.		EBL	75	69	75	0	75	0	75		75
	20	2 hr AM Turning Movement Count	EB	EBT	1,005	934	1,005	0	1,005	0	1,005		1,005
	20	Count Date: 1/30/2008		EBR	55	70	70	0	70	0	70		70
	20	2008		WBL	140	159	160	0	160	0	160		160
	20		WB	WBT	1,100	1,288	1,290	0	1,290	0	1,290		1,290
	20			WBR	165	136	165	0	165	0	165		165
	20			NBL	45	98	100	0	100	0	100		100
	20		NB	NBT	200	306	305	0	305	0	305	40	345
	20			NBR	175	271	270	0	270	0	270		270
	20			SBL	200	175	200	0	200	0	200		200
	20		SB	SBT	155	184	185	0	185	0	185		185
	20			SBR	105	129	130	0	130	0	130		130
			TEV		**3,420**	**3,817**	**3,955**	**0**	**3,955**	**0**	**3,955**	**40**	**3,995**
4	30	TV Highway @ SE Century Blvd./234th		EBL	65	46	275	0	275	0	275		275
	30	2 hr AM Turning Movement Count	EB	EBT	1,225	1,170	1,300	0	1,300	0	1,300		1,300
	30	Count Date: 9/27/2006		EBR	65	106	65	0	65	0	65		65
	30	2006		WBL	75	127	75	0	75	0	75		75
	30		WB	WBT	1,175	1,199	1,365	0	1,365	0	1,365		1,365
	30			WBR	30	22	25	0	25	0	25		25
	30			NBL	40	75	75	0	75	0	75		75
	30		NB	NBT	45	61	60	0	60	0	60		60
	30			NBR	85	156	155	0	155	0	155		155
	30			SBL	105	113	115	0	115	0	115		115
	30		SB	SBT	65	119	65	0	65	0	65		65
	30			SBR	95	105	105	0	105	0	105		105
			TEV		**3,070**	**3,299**	**3,680**	**0**	**3,680**	**0**	**3,680**	**0**	**3,680**
5	40	TV Highway @ SW 67th/229th Ave.		EBL	15	51	50	0	50	0	50		50
	40	2 hr AM Turning Movement Count	EB	EBT	1,280	1,296	1,295	0	1,295	0	1,295		1,295
	40	Count Date: 5/20/2010		EBR	60	13	60	0	60	0	60		60
	40	2010		WBL	75	11	75	0	75	0	75		75
	40		WB	WBT	1,220	1,212	1,165	0	1,165	45	1,210		1,210
	40			WBR	55	127	110	0	110	0	110		110
	40			NBL	40	91	90	0	90	30	120		120
	40		NB	NBT	25	132	130	0	130	0	130		130
	40			NBR	65	103	105	0	105	0	105		105
	40			SBL	80	104	80	0	80	0	80		80
	40		SB	SBT	25	7	25	0	25	0	25		25
	40			SBR	25	46	35	0	35	0	35		35
			TEV		**2,965**	**3,192**	**3,220**	**0**	**3,220**	**75**	**3,295**	**0**	**3,295**
6	50	TV Highway @ Cornelius Pass Rd./SW 219th A		EBL	110	159	160	0	160	20	180		180
	50	2 hr AM Turning Movement Count	EB	EBT	1,220	1,203	1,220	0	1,220	10	1,230		1,230
	50	Count Date: 5/25/2010		EBR	1	1	0	0	0	0	0		0
	50	2010		WBL	1	2	0	0	0	0	0		0
	50		WB	WBT	1,175	1,152	1,175	0	1,175	0	1,175		1,175
	50			WBR	330	587	590	100	690	0	690		690
	50			NBL	1	1	0	0	0	0	0		0
	50		NB	NBT	1	2	0	0	0	0	0		0
	50			NBR	1	1	0	0	0	0	0		0
	50			SBL	380	482	530	0	530	0	530		530
	50		SB	SBT	1	2	0	0	0	0	0		0
	50			SBR	150	154	190	0	190	0	190		190
			TEV		**3,371**	**3,746**	**3,865**	**100**	**3,965**	**30**	**3,995**	**0**	**3,995**
7	60	TV Highway @ SW 209th Ave./Anthony Dr		EBL	5	11	10	0	10	0	10		10
	60	2 hr AM Turning Movement Count	EB	EBT	1,410	1,466	1,465	0	1,465	0	1,465		1,465
	60	Count Date: 9/30/2009		EBR	255	261	260	0	260	0	260		260
	60	2009		WBL	65	46	65	0	65	0	65		65
	60		WB	WBT	1,270	1,439	1,300	0	1,300	(5)	1,295		1,295
	60			WBR	15	23	25	0	25	0	25		25
	60			NBL	305	418	420	100	520	0	520		520
	60		NB	NBT	195	362	360	0	360	0	360		360
	60			NBR	90	79	90	0	90	0	90		90
	60			SBL	35	39	40	0	40	0	40		40
	60		SB	SBT	70	76	100	0	100	0	100		100
	60			SBR	25	43	15	0	15	0	15		15
			TEV		**3,740**	**4,264**	**4,150**	**100**	**4,250**	**(5)**	**4,245**	**0**	**4,245**

Project: South Hillsboro Focus Area Plan
Job #: ODOT 0000-0737
Subject: *AM Turning Movement Volumes*
Created: 7/21/2012
Rev. Date: 3/4/2013

Int. No	Synchro ID	Intersection	Direction	Movement	2011 Final Balanced Volumes for Synchro - AM Peak	Direction Correction: 2035 Baseline NCHRP 255-Link Unbalanced	2010 UGB: 2035 Baseline NCHRP 255-Link Unbalanced	No Hi + South Cooper Mtn Volumes	2035 Unbalanced	Vol Balance	2035 Balanced Volumes	Vol Balance - Combined Internal + External	2035 SoHi Network Balanced w/229th
8	65	TV Highway @ SW 198th Ave.		EBL	20	37	35	0	35	0	35		35
	65	2 hr AM Turning Movement Count	EB	EBT	1,295	1,299	1,300	0	1,300	0	1,300		1,300
	65	Count Date: 5/20/2010		EBR	150	163	165	0	165	0	165		165
	65	2010		WBL	175	153	175	0	175	0	175		175
	65		WB	WBT	935	1,018	1,020	0	1,020	0	1,020		1,020
	65			WBR	80	120	120	0	120	0	120		120
	65			NBL	270	308	310	0	310	(35)	275		275
	65		NB	NBT	290	456	455	50	505	(65)	440		440
	65			NBR	385	326	385	0	385	(55)	330		330
	65			SBL	180	207	210	0	210	0	210		210
	65		SB	SBT	135	168	165	0	165	0	165		165
	65			SBR	30	46	45	0	45	0	45		45
			TEV		**3,945**	**4,302**	**4,385**	**50**	**4,435**	**(155)**	**4,280**	**0**	**4,280**
9	111	TV Highway @ SW 185th Ave.		EBL	165	176	175	0	175	0	175		175
	111	2 hr AM Turning Movement Count	EB	EBT	1,535	1,400	1,535	0	1,535	0	1,535		1,535
	111	Count Date: 5/25/2010		EBR	95	178	170	0	170	0	170		170
	111	2010		WBL	95	138	120	0	120	0	120		120
	111		WB	WBT	910	859	960	0	960	0	960		960
	111			WBR	155	129	135	0	135	0	135		135
	111			NBL	180	351	350	0	350	(25)	325		325
	111		NB	NBT	515	886	970	150	1,120	(110)	1,010		1,010
	111			NBR	135	198	200	0	200	(40)	160		160
	111			SBL	235	162	185	0	185	0	185		185
	111		SB	SBT	345	488	485	0	485	0	485		485
	111			SBR	125	114	125	0	125	0	125		125
			TEV		**4,490**	**5,080**	**5,410**	**150**	**5,560**	**(175)**	**5,385**	**0**	**5,385**
11	12	SE River Rd. @ SE Minter Bridge Rd.		EBL	35	41	40	0	40	0	40		40
	12	2 hr AM Turning Movement Count	EB	EBT	230	224	230	0	230	0	230		230
	12	Count Date: 5/24/2011		EBR	135	167	165	0	165	0	165		165
	12	2011		WBL	25	32	30	0	30	0	30		30
	12		WB	WBT	305	462	460	0	460	0	460		460
	12			WBR	150	181	180	0	180	0	180		180
	12			NBL	90	146	145	0	145	0	145		145
	12		NB	NBT	280	362	360	0	360	0	360		360
	12			NBR	45	49	50	0	50	0	50		50
	12			SBL	135	113	135	0	135	0	135		135
	12		SB	SBT	165	176	175	0	175	0	175		175
	12			SBR	25	31	30	0	30	0	30		30
			TEV		**1,620**	**1,984**	**2,000**	**0**	**2,000**	**0**	**2,000**	**0**	**2,000**
33	230	Farmington @ 209th		EBL	115	115	115	0	115	0	115		115
	230		EB	EBT	255	376	375	0	375	0	375		375
	230			EBR	10	7	10	0	10	0	10		10
	230			WBL	25	26	25	0	25	0	25		25
	230		WB	WBT	160	238	240	0	240	0	240		240
	230			WBR	160	246	245	0	245	0	245		245
	230			NBL	20	27	25	0	25	0	25		25
	230		NB	NBT	295	405	405	100	505	0	505		505
	230			NBR	50	101	100	50	150	0	150		150
	230			SBL	100	159	160	0	160	0	160		160
	230		SB	SBT	165	121	120	0	120	0	120		120
	230			SBR	95	99	100	0	100	0	100		100
			TEV		**1,450**	**1,919**	**1,920**	**150**	**2,070**	**0**	**2,070**	**0**	**2,070**
24-N	48	Kinnaman (north) @ 198th		EBL	0	0	0	0	0	0	0		0
	48		EB	EBT	0	0	0	0	0	0	0		0
	48			EBR	0	0	0	0	0	0	0		0
	48			WBL	35	45	45	0	45	0	45		45
	48		WB	WBT	0	0	0	0	0	0	0		0
	48			WBR	200	323	325	0	325	(125)	200		200
	48			NBL	0	0	0	0	0	0	0		0
	48		NB	NBT	625	633	635	50	685	(60)	625		625
	48			NBR	145	121	145	0	145	0	145		145
	48			SBL	145	139	145	0	145	0	145		145
	48		SB	SBT	180	168	180	0	180	5	185		185
	48			SBR	0	0	0	0	0	0	0		0
			TEV		**1,330**	**1,431**	**1,475**	**50**	**1,525**	**(180)**	**1,345**	**0**	**1,345**
24-S	4	Kinnaman (south) @ 198th		EBL	70	62	70	0	70	100	170		170
	4		EB	EBT	0	0	0	0	0	0	0		0
	4			EBR	50	52	50	0	50	0	50		50
	4			WBL	0	0	0	0	0	0	0		0
	4		WB	WBT	0	0	0	0	0	0	0		0
	4			WBR	0	0	0	0	0	0	0		0
	4			NBL	45	97	95	0	95	5	100		100
	4		NB	NBT	365	357	365	50	415	185	600		600
	4			NBR	0	0	0	0	0	0	0		0
	4			SBL	0	0	0	0	0	0	0		0
	4		SB	SBT	180	160	180	0	180	0	180		180
	4			SBR	30	50	50	0	50	0	50		50
			TEV		**740**	**779**	**810**	**50**	**860**	**290**	**1,150**	**0**	**1,150**

Project: South Hillsboro Focus Area Plan
Job #: ODOT 0000-0737
Subject: *AM Turning Movement Volumes*
Created: 7/21/2012
Rev. Date: 3/4/2013

Int. No	Synchro ID	Intersection	Direction	Movement	2011 Final Balanced Volumes for Synchro - AM Peak	Direction Correction: 2035 Baseline NCHRP 255-Link Unbalanced	2010 UGB: 2035 Baseline NCHRP 255-Link Unbalanced	No Hi + South Cooper Mtn Volumes	2035 Unbalanced	Vol Balance	2035 Balanced Volumes	Vol Balance - Combined Internal + External	2035 SoHi Network Balanced w/229th
25	49	Kinnaman @ 185th		EBL	135	141	140	0	140	35	175		175
	49		EB	EBT	345	318	345	0	345	0	345		345
	49			EBR	65	63	65	0	65	0	65		65
	49			WBL	75	114	115	0	115	0	115		115
	49		WB	WBT	290	404	405	0	405	(105)	300		300
	49			WBR	145	237	235	0	235	50	285		285
	49			NBL	85	165	165	0	165	(30)	135		135
	49		NB	NBT	395	900	395	150	545	305	850		850
	49			NBR	35	70	70	0	70	(0)	70		70
	49			SBL	90	134	135	0	135	0	135		135
	49		SB	SBT	200	315	315	0	315	0	315		315
	49			SBR	100	144	145	0	145	(20)	125		125
			TEV		**1,960**	**3,006**	**2,531**	**150**	**2,681**	**234**	**2,915**	**0**	**2,915**
34	235	Farmington @ 198th		EBL	125	173	175	50	225	(20)	205		205
	235		EB	EBT	440	739	740	0	740	(100)	640		640
	235			EBR	0	0	5	0	5	0	5		5
	235			WBL	0	0	5	0	5	0	5		5
	235		WB	WBT	355	489	490	0	490	0	490		490
	235			WBR	140	215	215	0	215	35	250		250
	235			NBL	0	0	5	0	5	0	5		5
	235		NB	NBT	0	0	5	0	5	0	5		5
	235			NBR	0	0	5	0	5	0	5		5
	235			SBL	200	313	315	0	315	(65)	250		250
	235		SB	SBT	0	0	5	0	5	0	5		5
	235			SBR	80	93	95	0	95	0	95		95
			TEV		**1,340**	**2,022**	**2,060**	**50**	**2,110**	**(150)**	**1,960**	**0**	**1,960**
35	237	Farmington Rd @ 185th		EBL	115	319	320	0	320	(50)	270		270
	237		EB	EBT	630	1,175	1,175	0	1,175	(400)	775		775
	237			EBR	105	123	125	0	125	(5)	120		120
	237			WBL	35	46	45	0	45	0	45		45
	237		WB	WBT	240	448	450	0	450	0	450		450
	237			WBR	30	93	95	0	95	0	95		95
	237			NBL	180	177	180	0	180	0	180		180
	237		NB	NBT	325	530	530	150	680	0	680		680
	237			NBR	120	132	130	0	130	0	130		130
	237			SBL	75	132	130	0	130	0	130		130
	237		SB	SBT	190	209	210	0	210	0	210		210
	237			SBR	80	126	125	0	125	0	125		125
			TEV		**2,125**	**3,509**	**3,515**	**150**	**3,665**	**(455)**	**3,210**	**0**	**3,210**
10	51	Cornelius Pass Rd @ Johnson St		EBL	20	79	80	0	80	0	80		80
	51		EB	EBT	50	95	95	0	95	0	95		95
	51			EBR	145	147	145	0	145	0	145		145
	51			WBL	250	290	290	0	290	0	290		290
	51		WB	WBT	15	63	65	0	65	0	65		65
	51			WBR	35	158	160	0	160	0	160		160
	51			NBL	85	148	150	0	150	0	150		150
	51		NB	NBT	310	573	575	100	675	0	675		675
	51			NBR	80	71	80	0	80	0	80		80
	51			SBL	15	21	20	0	20	0	20		20
	51		SB	SBT	295	221	295	0	295	0	295		295
	51			SBR	15	41	40	0	40	0	40		40
			TEV		**1,315**	**1,907**	**1,995**	**100**	**2,095**	**0**	**2,095**	**0**	**2,095**
19-S	16	198th Ave @ Blanton St (South)		EBL	485	465	485	0	485	(285)	200		200
	16		EB	EBT	0	0	0	0	0	0	0		0
	16			EBR	150	131	150	0	150	0	150		150
	16			WBL	0	0	0	0	0	0	0		0
	16		WB	WBT	0	0	0	0	0	0	0		0
	16			WBR	0	0	0	0	0	0	0		0
	16			NBL	150	157	160	0	160	0	160		160
	16		NB	NBT	315	376	375	50	425	210	635		635
	16			NBR	0	0	0	0	0	0	0		0
	16			SBL	0	0	0	0	0	0	0		0
	16		SB	SBT	145	145	145	0	145	5	150		150
	16			SBR	180	173	180	0	180	10	190		190
			TEV		**1,425**	**1,447**	**1,495**	**50**	**1,545**	**(60)**	**1,485**	**0**	**1,485**
19-N	63	198th Ave @ Blanton St (North)		EBL	0	0	0	0	0	0	0		0
	63		EB	EBT	0	0	0	0	0	0	0		0
	63			EBR	0	0	0	0	0	0	0		0
	63			WBL	50	65	65	0	65	(0)	65		65
	63		WB	WBT	0	0	0	0	0	0	0		0
	63			WBR	255	301	300	0	300	0	300		300
	63			NBL	0	0	0	0	0	0	0		0
	63		NB	NBT	700	799	800	50	850	(110)	740		740
	63			NBR	100	104	105	0	105	(10)	95		95
	63			SBL	280	246	280	0	280	0	280		280
	63		SB	SBT	255	274	275	0	275	0	275		275
	63			SBR	0	0	0	0	0	0	0		0
			TEV		**1,640**	**1,788**	**1,825**	**50**	**1,875**	**(120)**	**1,755**	**0**	**1,755**

Project: South Hillsboro Focus Area Plan
Job #: ODOT 0000-0737
Subject: ***AM Turning Movement Volumes***
Created: 7/21/2012
Rev. Date: 3/4/2013

Int. No	Synchro ID	Intersection	Direction	Movement	2011 Final Balanced Volumes for Synchro - AM Peak	Direction Correction: 2035 Baseline NCHRP 255-Link Unbalanced	2010 UGB: 2035 Baseline NCHRP 255-Link Unbalanced	No Hi + South Cooper Mtn Volumes	2035 Unbalanced	Vol Balance	2035 Balanced Volumes	Vol Balance - Combined Internal + External	2035 SoHi Network Balanced w/229th
20-S	66	185th Ave @ Blanton (South)		EBL	0	0	0	0	0	0	0		0
	66		EB	EBT	0	0	0	0	0	0	0		0
	66			EBR	0	0	0	0	0	0	0		0
	66			WBL	60	75	75	0	75	0	75		75
	66		WB	WBT	0	0	0	0	0	0	0		0
	66			WBR	155	214	215	0	215	0	215		215
	66			NBL	0	0	0	0	0	0	0		0
	66		NB	NBT	685	1,330	1,330	150	1,480	(290)	1,190		1,190
	66			NBR	135	157	155	0	155	0	155		155
	66			SBL	130	131	130	0	130	10	140		140
	66		SB	SBT	430	648	650	0	650	(25)	625		625
	66			SBR	0	0	0	0	0	0	0		0
			TEV		**1,595**	**2,554**	**2,554**	**150**	**2,704**	**(304)**	**2,400**	**0**	**2,400**
20-N	39	185th Ave @ Blanton (North)		EBL	225	206	225	0	225	0	225		225
	39		EB	EBT	0	0	0	0	0	0	0		0
	39			EBR	90	70	90	0	90	0	90		90
	39			WBL	0	0	0	0	0	0	0		0
	39		WB	WBT	0	0	0	0	0	0	0		0
	39			WBR	0	0	0	0	0	0	0		0
	39			NBL	110	137	135	0	135	0	135		135
	39		NB	NBT	640	1,280	1,280	150	1,430	(160)	1,270		1,270
	39			NBR	0	0	0	0	0	0	0		0
	39			SBL	0	0	0	0	0	0	0		0
	39		SB	SBT	460	699	700	0	700	(25)	675		675
	39			SBR	110	123	125	0	125	(25)	100		100
			TEV		**1,635**	**2,515**	**2,555**	**150**	**2,705**	**(210)**	**2,495**	**0**	**2,495**

Project: South Hillsboro Focus Area Plan
Job #: ODOT0000-0737
Subject: **AM Turning Movement Volumes**
Created: 7/21/2012
Rev. Date: 3/4/2013

Table 2: 2035 Link Volume Calculations for the AM Peak Period

Road	From	To	Direction	Volumes 2011	Model 2010	Interpolated Model 2011	Model 2035	2011-2035 Model Comparison: Annual Growth	Total Growth	Volume Difference	2035 Volume Estimates: Difference Volume	Growth Volume	Absolute Difference	Average	Forecast Used	Method Used	Comments
River Road	South of TV Hwy	TV Hwy	NB	400	592	601	808	1.5%	35.0%	207	607	540	12%	574	**607**	Difference Method	Absolute difference >10% --> Used difference only
	TV Hwy	South of TV Hwy	SB	435	258	258	263	0.1%	1.9%	5	440	443	1%	441	**440**	Difference Method	To be consistent with method used for opposing direction
	TV Hwy	North of TV Hwy	NB	235	168	175	339	4.1%	97.7%	164	399	465	15%	432	**399**	Difference Method	Absolute difference >10% --> Used difference only
	North of TV Hwy	TV Hwy	SB	150	54	54	48	-0.4%	-10.7%	-6	144	134	7%	139	**144**	Difference Method	To be consistent with method used for opposing direction
Minter Bridge@Cypress	South of River Road	River Road	NB	415	343	349	487	1.7%	40.3%	138	553	582	5%	568	**568**	Average of Difference and Growth	
	River Road	South of River Road	SB	325	263	265	310	0.7%	17.2%	45	370	381	3%	375	**375**	Average of Difference and Growth	
	River Road	South of TV Hwy	NB	465	475	480	600	1.1%	25.3%	120	585	582	0%	584	**584**	Average of Difference and Growth	
	TV Hwy	River Road	SB	325	283	283	286	0.0%	1.0%	3	328	328	0%	328	**328**	Average of Difference and Growth	
	TV Hwy	North of TV Hwy	NB	295	537	541	640	0.8%	18.4%	99	394	349	12%	372	**394**	Difference Method	
	North of TV Hwy	TV Hwy	SB	360	384	381	308	-0.8%	-19.0%	-73	287	292	2%	289	**287**	Difference Method	To be consistent with method used for opposing direction
Brookwood Blvd	Witch Hazel	TV Hwy	NB	420	505	516	789	2.2%	54.0%	273	693	647	7%	670	**670**	Average of Difference and Growth	
	TV Hwy	Witch Hazel	SB	350	369	372	436	0.7%	17.4%	64	414	411	1%	413	**413**	Average of Difference and Growth	
	TV Hwy	Frewing	NB	440	592	595	677	0.6%	13.8%	82	522	501	4%	511	**511**	Average of Difference and Growth	
	Frewing	TV Hwy	SB	460	456	457	481	0.2%	5.3%	24	484	484	0%	484	**484**	Average of Difference and Growth	
Century/234th Ave	Alexander	TV Hwy	NB	170	269	274	395	1.9%	45.0%	121	291	246	17%	269	**291**	Difference Method	Absolute difference >10% --> Used difference only
	TV Hwy	Alexander	SB	205	88	94	241	7.0%	166.9%	147	352	547	43%	450	**352**	Difference Method	Absolute difference >10% --> Used difference only
	TV Hwy	Johnson	NB	140	434	433	417	-0.2%	-3.8%	-16	124	135	9%	129	**129**	Average of Difference and Growth	
	Johnson	TV Hwy	SB	265	250	253	322	1.2%	27.6%	69	334	338	1%	336	**336**	Average of Difference and Growth	
229th/67th	Alexander	TV Hwy	NB	130	257	265	462	3.2%	76.6%	197	327	230	35%	278	**327**	Difference Method	Absolute difference >10% --> Used difference only
	TV Hwy	Alexander	SB	160	290	285	156	-1.8%	-44.4%	-129	31	89	96%	60	**31**	Difference Method	Absolute difference >10% --> Used difference only
	TV Hwy	Johnson	NB	95	68	77	291	13.1%	314.8%	214	309	394	24%	352	**309**	Difference Method	Absolute difference >10% --> Used difference only
	Johnson	TV Hwy	SB	130	29	30	59	4.1%	99.3%	29	159	259	48%	209	**159**	Difference Method	Absolute difference >10% --> Used difference only
Cornelius Pass	South of TV Hwy	TV Hwy	NB	3	1	1	3	8.0%	192.0%	2	5	9	55%	7	**5**	Difference Method	Absolute difference >10% --> Used difference only
	TV Hwy	South of TV Hwy	SB	3	1	1	3	8.0%	192.0%	2	5	9	55%	7	**5**	Difference Method	Absolute difference >10% --> Used difference only
	TV Hwy	Johnson	NB	475	524	536	822	2.3%	54.6%	286	761	734	4%	748	**748**	Average of Difference and Growth	
	Johnson	TV Hwy	SB	690	559	558	529	-0.2%	-5.2%	-29	661	654	1%	658	**658**	Average of Difference and Growth	
	Johnson	North of Johnson	NB	365	525	544	988	3.5%	84.7%	444	809	674	18%	742	**809**	Difference Method	Absolute difference >10% --> Used difference only
	North of Johnson	Johnson	SB	325	519	517	459	-0.5%	-11.1%	-58	267	289	8%	278	**267**	Difference Method	To be consistent with method used for opposing direction
209th Ave	South of Farmington	Farmington	NB	365	434	441	614	1.7%	39.8%	173	538	510	5%	524	**538**	Difference Method	To be consistent with method used for opposing direction
	Farmington	South of Farmington	SB	200	328	326	280	-0.6%	-14.0%	-46	154	172	11%	163	**154**	Difference Method	Absolute difference >10% --> Used difference only
	Farmington	Rosedale	NB	570	654	663	872	1.3%	32.0%	209	779	752	4%	766	**766**	Average of Difference and Growth	To be consistent with method used for opposing direction
	Rosedale	Farmington	SB	360	277	278	297	0.3%	6.9%	19	379	385	2%	382	**382**	Average of Difference and Growth	
	Blanton	TV Hwy	NB	590	599	610	875	1.8%	44.2%	265	855	851	0%	853	**853**	Average of Difference and Growth	
	TV Hwy	Blanton	SB	390	337	337	331	-0.1%	-1.7%	-6	384	383	0%	384	**384**	Average of Difference and Growth	
	TV Hwy	Alexander	NB	215	426	434	615	1.8%	42.6%	181	396	307	26%	352	**396**	Difference Method	Absolute difference >10% --> Used difference only
	Alexander	TV Hwy	SB	130	246	247	276	0.5%	11.7%	29	159	145	9%	152	**159**	Difference Method	To be consistent with method used for opposing direction
198th Ave	Farmington	North of Farmington	NB	265	330	335	458	1.6%	37.2%	123	388	364	6%	376	**388**	Difference Method	To be consistent with method used for opposing direction
	North of Farmington	Farmington	SB	280	428	433	562	1.3%	30.1%	129	409	364	12%	386	**409**	Difference Method	Absolute difference >10% --> Used difference only
	South of Kinnaman (south)	Kinnaman (south)	NB	410	488	490	537	0.4%	9.6%	47	457	450	2%	453	**453**	Average of Difference and Growth	
	Kinnaman (south)	South of Kinnaman (south)	SB	230	110	110	98	-0.4%	-10.5%	-12	218	206	6%	212	**212**	Average of Difference and Growth	
	Kinnaman (south)	North of Kinnaman (south)	NB	435	621	620	602	-0.1%	-2.9%	-18	417	422	1%	419	**419**	Average of Difference and Growth	
	North of Kinnaman (south)	Kinnaman (south)	SB	210	168	168	167	0.0%	-0.6%	-1	209	209	0%	209	**209**	Average of Difference and Growth	
	South of Kinnaman (north)	Kinnaman (north)	NB	770	621	620	602	-0.1%	-2.9%	-18	752	747	1%	750	**750**	Average of Difference and Growth	
	Kinnaman (north)	South of Kinnaman (north)	SB	215	168	168	167	0.0%	-0.6%	-1	214	214	0%	214	**214**	Average of Difference and Growth	
	Kinnaman (north)	North of Kinnaman (north)	NB	825	774	779	907	0.7%	16.5%	128	953	961	1%	957	**957**	Average of Difference and Growth	
	North of Kinnaman (north)	Kinnaman (north)	SB	325	239	238	222	-0.3%	-6.8%	-16	309	303	2%	306	**306**	Average of Difference and Growth	
	South of Blanton (south)	Blanton (south)	NB	465	774	779	907	0.7%	16.5%	128	593	542	9%	567	**567**	Average of Difference and Growth	
	Blanton (south)	South of Blanton (south)	SB	295	239	238	222	-0.3%	-6.8%	-16	279	275	1%	277	**277**	Average of Difference and Growth	
	Blanton (south)	Blanton (north)	NB	800	687	689	726	0.2%	5.4%	37	837	844	1%	841	**841**	Average of Difference and Growth	
	Blanton (north)	Blanton (south)	SB	325	389	390	405	0.2%	3.9%	15	340	338	1%	339	**339**	Average of Difference and Growth	
	Blanton (north)	TV Hwy	NB	945	524	529	639	0.9%	21.1%	110	1055	1144	8%	1100	**1100**	Average of Difference and Growth	
	TV Hwy	Blanton (north)	SB	460	398	399	421	0.2%	5.5%	22	482	486	1%	484	**484**	Average of Difference and Growth	
	TV Hwy	Alexander	NB	390	383	392	614	2.4%	57.9%	222	612	616	1%	614	**614**	Average of Difference and Growth	
	Alexander	TV Hwy	SB	345	350	353	434	1.0%	23.0%	81	426	424	0%	425	**425**	Average of Difference and Growth	
Farmington Rd	West of 209th	209th	EB	380	438	443	575	1.3%	30.0%	132	512	494	3%	503	**503**	Average of Difference and Growth	
	209th	East of 209th	EB	405	349	359	590	2.8%	66.3%	231	636	673	6%	655	**636**	Difference Method	To be consistent with method used for opposing direction
	East of 209th	209th	WB	345	535	542	712	1.3%	31.8%	170	515	455	12%	485	**515**	Difference Method	
	209th	West of 209th	WB	275	353	357	456	1.2%	28.0%	99	374	352	6%	363	**363**	Average of Difference and Growth	
	West of 198th	198th	EB	565	558	573	924	2.6%	63.0%	351	916	921	0%	919	**919**	Average of Difference and Growth	
	198th	East of 198th	EB	640	678	696	1120	2.6%	62.6%	424	1064	1041	2%	1052	**1052**	Average of Difference and Growth	
	East of 198th	198th	WB	495	562	572	800	1.7%	40.7%	228	723	696	4%	710	**710**	Average of Difference and Growth	
	198th	West of 198th	WB	435	539	546	708	1.3%	30.1%	162	597	566	5%	582	**582**	Average of Difference and Growth	
	West of 185th	185th	EB	850	717	747	1472	4.2%	101.1%	725	1575	1709	8%	1642	**1642**	Average of Difference and Growth	
	185th	East of 185th	EB	825	655	681	1294	3.9%	93.7%	613	1438	1598	10%	1518	**1438**	Difference Method	Absolute difference >10% --> Used difference only
	East of 185th	185th	WB	305	424	436	727	2.9%	68.6%	291	596	514	15%	555	**596**	Difference Method	Absolute difference >10% --> Used difference only
	185th	West of 185th	WB	500	508	518	769	2.1%	49.3%	251	751	747	1%	749	**751**	Difference Method	To be consistent with method used for opposing direction

Project: South Hillsboro Focus Area Plan
Job #: ODOT0000-0737
Subject: **AM Turning Movement Volumes**
Created: 7/21/2012
Rev. Date: 3/4/2013

Table 2: 2035 Link Volume Calculations for the AM Peak Period

Road	From	To	Direction	Volumes 2011	Model 2010	Interpolated Model 2011	Model 2035	2011-2035 Model Comparison: Annual Growth	Total Growth	Volume Difference	2035 Volume Estimates: Difference Volume	Growth Volume	Absolute Difference	Average	Forecast Used	Method Used	Comments
185th Ave	South of Farmington	Farmington	NB	625	711	721	963	1.4%	34.0%	242	867	838	3%	852	**852**	Average of Difference and Growth	
	Farmington	South of Farmington	SB	330	371	373	424	0.6%	13.7%	51	381	375	1%	378	**378**	Average of Difference and Growth	
	Farmington	Rosa	NB	470	630	650	1122	3.1%	75.0%	472	942	822	14%	882	**942**	Difference Method	Absolute difference >10% --> Used difference only
	Rosa	Farmington	SB	345	312	317	447	1.7%	41.5%	130	475	488	3%	481	**475**	Difference Method	To be consistent with method used for opposing direction
	South of Kinnaman	Kinnaman	NB	515	675	701	1327	3.9%	92.7%	626	1141	993	14%	1067	**1141**	Difference Method	Absolute difference >10% --> Used difference only
	Kinnaman	South of Kinnaman	SB	340	316	322	475	2.0%	48.3%	153	493	504	2%	498	**493**	Difference Method	To be consistent with method used for opposing direction
	Kinnaman	North of Kinnaman	NB	675	743	769	1401	3.5%	85.0%	632	1307	1249	5%	1278	**1278**	Average of Difference and Growth	
	North of Kinnaman	Kinnaman	SB	390	363	371	569	2.3%	54.5%	198	588	602	2%	595	**595**	Average of Difference and Growth	
	South of Blanton (south)	Blanton (south)	NB	820	743	769	1401	3.5%	85.0%	632	1452	1517	4%	1484	**1484**	Average of Difference and Growth	
	Blanton (south)	South of Blanton (south)	SB	490	363	371	569	2.3%	54.5%	198	688	757	10%	722	**722**	Average of Difference and Growth	
	Blanton (south)	North of Blanton (south)	NB	840	713	742	1446	4.1%	98.7%	704	1544	1669	8%	1606	**1544**	Difference Method	To be consistent with method used for opposing direction
	North of Blanton (south)	Blanton (south)	SB	560	409	418	637	2.2%	53.5%	219	779	860	10%	819	**779**	Difference Method	Absolute difference >10% --> Used difference only
	South of Blanton (north)	Blanton (north)	NB	750	713	742	1446	4.1%	98.7%	704	1454	1490	2%	1472	**1454**	Difference Method	To be consistent with method used for opposing direction
	Blanton (north)	South of Blanton (north)	SB	550	409	418	637	2.2%	53.5%	219	769	844	9%	807	**769**	Difference Method	To be consistent with method used for opposing direction
	Blanton (north)	N of Blanton (north)	NB	865	991	1019	1682	2.8%	66.9%	663	1528	1444	6%	1486	**1486**	Average of Difference and Growth	
	N of Blanton (north)	Blanton (north)	SB	570	487	498	754	2.2%	52.6%	256	826	870	5%	848	**848**	Average of Difference and Growth	
	S of TV Hwy	TV Hwy	NB	830	991	1019	1682	2.8%	66.9%	663	1493	1386	7%	1439	**1439**	Average of Difference and Growth	
	TV Hwy	S of TV Hwy	SB	535	487	498	754	2.2%	52.6%	256	791	817	3%	804	**804**	Average of Difference and Growth	
	TV Hwy	Alexander	NB	835	1269	1284	1640	1.2%	28.1%	356	1191	1069	11%	1130	**1191**	Difference Method	Absolute difference >10% --> Used difference only
	Alexander	TV Hwy	SB	705	995	998	1059	0.3%	6.2%	61	766	749	2%	757	**766**	Difference Method	To be consistent with method used for opposing direction
Kinnaman (south)	West of 198th	198th	EB	120	158	158	152	-0.2%	-3.6%	-6	114	116	1%	115	**114**	Difference Method	
	198th	West of 198th	WB	75	82	85	157	3.7%	87.8%	72	147	141	4%	144	**147**	Difference Method	
Kinnaman (north)	East of 198th	198th	WB	235	320	325	457	1.7%	41.1%	132	367	332	10%	349	**367**	Difference Method	
	198th	East of 198th	EB	290	237	236	206	-0.5%	-12.6%	-30	260	254	3%	257	**260**	Difference Method	To be consistent with method used for opposing direction
Kinnaman	West of 185th	185th	EB	545	318	317	296	-0.3%	-6.6%	-21	524	509	3%	516	**524**	Difference Method	
	185th	West of 185th	WB	530	396	404	587	1.9%	46.3%	183	713	775	8%	744	**713**	Difference Method	
	185th	East of 185th	EB	470	298	300	352	0.7%	17.4%	52	522	552	6%	537	**522**	Difference Method	
	East of 185th	185th	WB	510	397	406	623	2.3%	54.6%	217	727	789	8%	758	**758**	Average of Difference and Growth	
Johnson St	West of Cornelius pass	Cornelius Pass	EB	215	123	127	215	3.0%	71.8%	88	303	369	20%	336	**303**	Difference Method	Absolute difference >10% --> Used difference only
	Cornelius Pass	West of Cornelius pass	WB	115	94	100	237	6.1%	146.0%	137	252	283	11%	268	**252**	Difference Method	Absolute difference >10% --> Used difference only
	Cornelius Pass	East of Cornelius Pass	EB	145	82	84	126	2.1%	51.5%	42	187	220	16%	203	**187**	Difference Method	Absolute difference >10% --> Used difference only
	East of Cornelius Pass	Cornelius Pass	WB	300	194	202	384	3.9%	94.0%	182	482	582	19%	532	**482**	Difference Method	Absolute difference >10% --> Used difference only
TV Highway	River Road	Cypress/Minter Br	EB	715	727	728	743	0.1%	2.1%	15	730	730	0%	730	**730**	Average of Difference and Growth	
	Cypress/Minter Br	River Road	WB	810	875	886	1160	1.3%	31.3%	274	1084	1063	2%	1073	**1073**	Average of Difference and Growth	
	Cypress/Minter Br	E of Cypress/Minter Br	EB	865	981	978	914	-0.3%	-6.6%	-64	801	808	1%	804	**804**	Average of Difference and Growth	
	E of Cypress/Minter Br	Cypress/Minter Br	WB	810	1091	1101	1348	0.9%	22.6%	247	1057	993	6%	1025	**1025**	Average of Difference and Growth	
	W of Brookwood Blvd	Brookwood Blvd	EB	1135	981	978	914	-0.3%	-6.6%	-64	1071	1061	1%	1066	**1066**	Average of Difference and Growth	
	Brookwood Blvd	W of Brookwood Blvd	WB	1250	1091	1101	1348	0.9%	22.6%	247	1497	1533	2%	1515	**1515**	Average of Difference and Growth	
	Brookwood Blvd	E of Brookwood	EB	1380	1216	1216	1215	0.0%	-0.1%	-1	1379	1379	0%	1379	**1379**	Average of Difference and Growth	
	E of Brookwood	Brookwood Blvd	WB	1405	1326	1333	1492	0.5%	12.0%	159	1564	1574	1%	1569	**1569**	Average of Difference and Growth	
	W of Century/234th	Century/234th	EB	1355	1199	1198	1163	-0.1%	-2.9%	-35	1320	1316	0%	1318	**1318**	Average of Difference and Growth	
	Century/234th	W of Century/234th	WB	1310	1248	1251	1318	0.2%	5.4%	67	1377	1381	0%	1379	**1379**	Average of Difference and Growth	
	Century/234th	E of Century/234th	EB	1415	1317	1318	1341	0.1%	1.7%	23	1438	1440	0%	1439	**1439**	Average of Difference and Growth	
	E of Century/234th	Century/234th	WB	1280	1369	1372	1438	0.2%	4.8%	66	1346	1342	0%	1344	**1344**	Average of Difference and Growth	
	W of 229th/67th	229th/67th	EB	1355	1317	1318	1341	0.1%	1.7%	23	1378	1379	0%	1378	**1378**	Average of Difference and Growth	
	229th/67th	W of 229th/67th	WB	1285	1369	1372	1438	0.2%	4.8%	66	1351	1347	0%	1349	**1349**	Average of Difference and Growth	
	229th/67th	E of 229th/67th	EB	1425	1333	1336	1411	0.2%	5.6%	75	1500	1505	0%	1502	**1502**	Average of Difference and Growth	
	E of 229th/67th	229th/67th	WB	1350	1456	1455	1435	-0.1%	-1.4%	-20	1330	1331	0%	1331	**1331**	Average of Difference and Growth	
	W of Corn Pass	Cornelius Pass	EB	1331	1333	1336	1411	0.2%	5.6%	75	1406	1406	0%	1406	**1406**	Average of Difference and Growth	
	Cornelius Pass	W of Corn Pass	WB	1326	1456	1455	1435	-0.1%	-1.4%	-20	1306	1308	0%	1307	**1307**	Average of Difference and Growth	
	Cornelius Pass	E fo Cornelius pass	EB	1601	1500	1503	1586	0.2%	5.5%	83	1684	1689	0%	1686	**1686**	Average of Difference and Growth	
	E fo Cornelius pass	Cornelius Pass	WB	1506	1589	1601	1901	0.8%	18.8%	300	1806	1790	1%	1798	**1798**	Average of Difference and Growth	
	W of 209th	209th	EB	1670	1500	1503	1586	0.2%	5.5%	83	1753	1762	1%	1757	**1757**	Average of Difference and Growth	
	209th	W of 209th	WB	1600	1589	1601	1901	0.8%	18.8%	300	1900	1902	0%	1901	**1901**	Average of Difference and Growth	
	209th	E of 209th	EB	1535	1396	1398	1444	0.1%	3.3%	46	1581	1586	0%	1583	**1583**	Average of Difference and Growth	
	E of 209th	209th	WB	1350	1402	1408	1554	0.4%	10.4%	146	1496	1491	0%	1493	**1493**	Average of Difference and Growth	
	W of 198th	198th	EB	1465	1396	1398	1444	0.1%	3.3%	46	1511	1513	0%	1512	**1512**	Average of Difference and Growth	
	198th	W of 198th	WB	1235	1402	1408	1554	0.4%	10.4%	146	1381	1364	1%	1372	**1372**	Average of Difference and Growth	
	198th	E of 198th	EB	1860	1631	1630	1604	-0.1%	-1.6%	-26	1834	1830	0%	1832	**1832**	Average of Difference and Growth	
	E of 198th	198th	WB	1190	1545	1550	1675	0.3%	8.1%	125	1315	1286	2%	1300	**1300**	Average of Difference and Growth	
	W of 185th	185th	EB	1795	1640	1639	1604	-0.1%	-2.1%	-35	1760	1757	0%	1759	**1759**	Average of Difference and Growth	
	185th	W of 185th	WB	1215	1547	1552	1675	0.3%	7.9%	123	1338	1312	2%	1325	**1325**	Average of Difference and Growth	
	185th	E of 185th	EB	1905	1905	1899	1754	-0.3%	-7.6%	-145	1760	1760	0%	1760	**1760**	Average of Difference and Growth	
	E of 185th	185th	WB	1160	1658	1656	1620	-0.1%	-2.2%	-36	1124	1134	1%	1129	**1129**	Average of Difference and Growth	

Project: South Hillsboro Focus Area Plan
Job #: ODOT0000-0737
Subject: **AM Turning Movement Volumes**
Created: 7/21/2012
Rev. Date: 3/4/2013

Table 2: 2035 Link Volume Calculations for the AM Peak Period

Road	From	To	Direction	Volumes 2011	Model 2010	Interpolated Model 2011	Model 2035	2011-2035 Model Comparison: Annual Growth	Total Growth	Volume Difference	2035 Volume Estimates: Difference Volume	Growth Volume	Absolute Difference	Average	Forecast Used	Method Used	Comments
River Road	W of Minter Br	Minter Br	EB	400	299	300	336	0.5%	11.9%	36	436	448	3%	442	**442**	Average of Difference and Growth	
	Minter Br	W of Minter Br	WB	420	463	473	702	2.1%	49.6%	229	649	628	3%	639	**639**	Average of Difference and Growth	
	Minter Br	E fo Minter Br	EB	410	178	177	163	-0.3%	-8.1%	-14	396	377	5%	386	**386**	Average of Difference and Growth	
	E fo Minter Br	Minter Br	WB	480	454	462	666	1.9%	44.8%	204	684	695	2%	689	**689**	Average of Difference and Growth	
Blanton (south)	209th	198th	EB	635	635	610	9	-3.9%	-94.6%	-601	34	34	0%	34	**635**	Average of Difference and Growth	Road already present although not in 2010 model
	198th	209th	WB	330	330	321	108	-2.7%	-64.6%	-213	117	117	0%	117	**330**	Average of Difference and Growth	Volume not in 2035 model
	185th	E of 185th	EB	265	156	157	180	0.6%	14.8%	23	288	304	5%	296	**288**	Difference Method	To be consistent with method used for opposing direction
	E of 185th	185th	WB	215	80	83	156	3.8%	91.2%	73	288	411	35%	350	**288**	Difference Method	Absolute difference >10% --> Used difference only
Blanton (north)	198th	E of 198th	EB	380	221	220	189	-0.6%	-13.9%	-31	349	327	7%	338	**349**	Difference Method	To be consistent with method used for opposing direction
	E of 198th	198th	WB	305	49	51	87	3.1%	74.4%	36	341	532	44%	437	**341**	Difference Method	Absolute difference >10% --> Used difference only
	W of 185th	185th	EB	315	269	268	236	-0.5%	-11.8%	-32	283	278	2%	281	**283**	Difference Method	To be consistent with method used for opposing direction
	185th	W of 185th	WB	220	56	58	98	3.0%	72.0%	40	260	378	37%	319	**260**	Difference Method	Absolute difference >10% --> Used difference only

Intersection does not currently exist

Greater than 10% difference between difference and growth methods

Insert data into cells with blue font : HEADER INFO, BASE YEAR TURN MOVEMENTS, FUTURE YEAR LINK VOLUMES

OUTPUT DATA IS IN BOLD PRINT.

INTERSECTION :	TV Hwy @ Cypress/Minter Bridge		
SCENARIO :	2035 with 2012 UGB Buildout - Without South Hillsboro		
PEAK HOUR :	AM		
BASE YEAR :	2011	EAST-WEST ROAD:	TV Hwy
FUTURE YEAR :	2035	NORTH-SOUTH ROAD:	Cypress/Minter Bridge

	PEAK HOUR TURNING MOVEMENTS											
	NORTHBOUND			SOUTHBOUND			EASTBOUND			WESTBOUND		
YEAR	Left	Thru	Right	Left	Thru	Right	Left	Thru	Right	Left	Thru	Right
BASE YEAR	90	205	140	105	210	45	45	620	50	90	675	45
OUTPUT FUTURE	**151**	**286**	**141**	**65**	**172**	**47**	**60**	**598**	**64**	**92**	**876**	**48**

	PEAK HOUR DIRECTIONAL LINK VOLUMES									
	SOUTHLEG		NORTHLEG		WESTLEG		EASTLEG		ALL LEGS	
YEAR	In	Out	In	Out	In	Out	In	Out	In	Out
BASE YEAR	435	350	360	295	715	810	810	865	2,320	2,320
OUTPUT FUTURE	**578**	**328**	**284**	**394**	**722**	**1,073**	**1,016**	**804**	2,600	2,600
INPUT FUTURE	584	328	287	394	730	1,073	1,025	804	2,626	2,600
									-26.06	

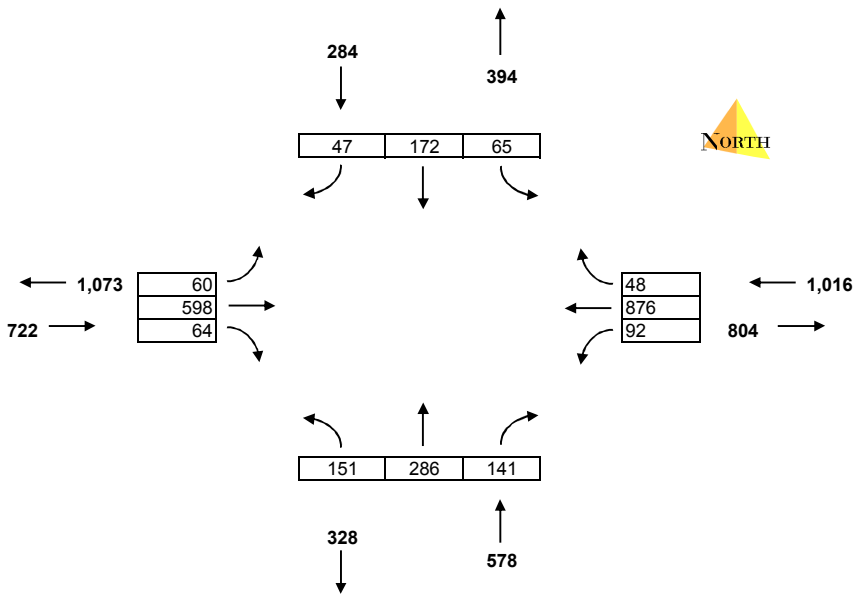

* Turn Calculation Output from NCHRP 255

Insert data into cells with blue font : HEADER INFO, BASE YEAR TURN MOVEMENTS, FUTURE YEAR LINK VOLUMES

OUTPUT DATA IS IN BOLD PRINT.

INTERSECTION :	TV Hwy @ Brookwood		
SCENARIO :	2035 with 2012 UGB Buildout - Without South Hillsboro		
PEAK HOUR :	AM		
BASE YEAR :	2011	EAST-WEST ROAD:	TV Hwy
FUTURE YEAR :	2035	NORTH-SOUTH ROAD:	Brookwood

	PEAK HOUR TURNING MOVEMENTS											
	NORTHBOUND			SOUTHBOUND			EASTBOUND			WESTBOUND		
YEAR	Left	Thru	Right	Left	Thru	Right	Left	Thru	Right	Left	Thru	Right
BASE YEAR	45	200	175	200	155	105	75	1,005	55	140	1,100	165
OUTPUT FUTURE	**98**	**306**	**271**	**175**	**184**	**129**	**69**	**934**	**70**	**159**	**1,288**	**136**

	PEAK HOUR DIRECTIONAL LINK VOLUMES									
	SOUTHLEG		NORTHLEG		WESTLEG		EASTLEG		ALL LEGS	
YEAR	In	Out	In	Out	In	Out	In	Out	In	Out
BASE YEAR	420	350	460	440	1,135	1,250	1,405	1,380	3,420	3,420
OUTPUT FUTURE	**674**	**413**	**488**	**511**	**1,072**	**1,515**	**1,583**	**1,379**	3,817	3,817
INPUT FUTURE	670	413	484	511	1,066	1,515	1,569	1,379	3,789	3,817
									28.92	

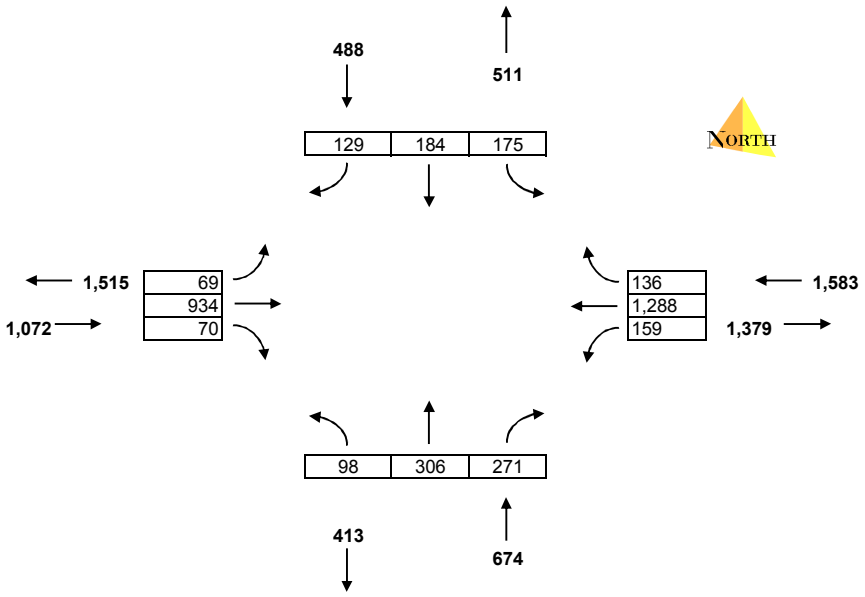

* Turn Calculation Output from NCHRP 255

Insert data into cells with blue font : HEADER INFO, BASE YEAR TURN MOVEMENTS, FUTURE YEAR LINK VOLUMES

OUTPUT DATA IS IN BOLD PRINT.

INTERSECTION :	TV Hwy @ Century Dr/234th		
SCENARIO :	2035 with 2012 UGB Buildout - Without South Hillsboro		
PEAK HOUR :	AM		
BASE YEAR :	2011	EAST-WEST ROAD:	TV Hwy
FUTURE YEAR :	2035	NORTH-SOUTH ROAD:	Century Drve/234th

	PEAK HOUR TURNING MOVEMENTS											
	NORTHBOUND			SOUTHBOUND			EASTBOUND			WESTBOUND		
YEAR	Left	Thru	Right	Left	Thru	Right	Left	Thru	Right	Left	Thru	Right
BASE YEAR	40	45	85	105	65	95	65	1,225	65	75	1,175	30
OUTPUT FUTURE	**75**	**61**	**156**	**113**	**119**	**105**	**46**	**1,170**	**106**	**127**	**1,199**	**22**

	PEAK HOUR DIRECTIONAL LINK VOLUMES									
	SOUTHLEG		NORTHLEG		WESTLEG		EASTLEG		ALL LEGS	
YEAR	In	Out	In	Out	In	Out	In	Out	In	Out
BASE YEAR	170	205	265	140	1,355	1,310	1,280	1,415	3,070	3,070
OUTPUT FUTURE	**292**	**352**	**337**	**129**	**1,321**	**1,379**	**1,349**	**1,439**	3,299	3,299
INPUT FUTURE	291	352	336	129	1,318	1,379	1,344	1,439	3,289	3,299
									9.422	

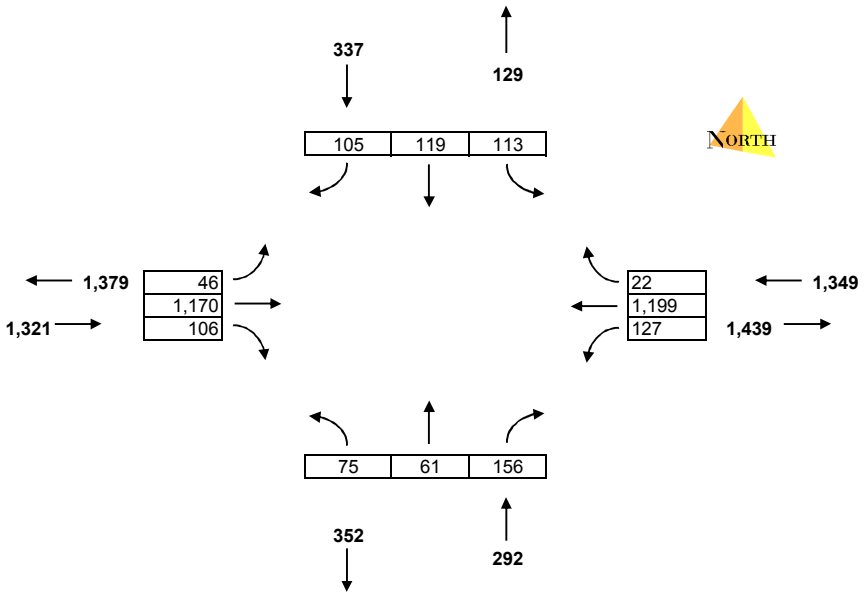

* Turn Calculation Output from NCHRP 255

Insert data into cells with blue font : HEADER INFO, BASE YEAR TURN MOVEMENTS, FUTURE YEAR LINK VOLUMES

OUTPUT DATA IS IN BOLD PRINT.

INTERSECTION :	TV Hwy @ 229th		
SCENARIO :	2035 with 2012 UGB Buildout - Without South Hillsboro		
PEAK HOUR :	AM		
BASE YEAR :	2011	EAST-WEST ROAD:	TV Hwy
FUTURE YEAR :	2035	NORTH-SOUTH ROAD:	229th

	PEAK HOUR TURNING MOVEMENTS											
	NORTHBOUND			SOUTHBOUND			EASTBOUND			WESTBOUND		
YEAR	Left	Thru	Right	Left	Thru	Right	Left	Thru	Right	Left	Thru	Right
BASE YEAR	40	25	65	80	25	25	15	1,280	60	75	1,220	55
OUTPUT FUTURE	**91**	**132**	**103**	**104**	**7**	**46**	**51**	**1,296**	**13**	**11**	**1,212**	**127**

	PEAK HOUR DIRECTIONAL LINK VOLUMES									
	SOUTHLEG		NORTHLEG		WESTLEG		EASTLEG		ALL LEGS	
YEAR	In	Out	In	Out	In	Out	In	Out	In	Out
BASE YEAR	130	160	130	95	1,355	1,285	1,350	1,425	2,965	2,965
OUTPUT FUTURE	**325**	**31**	**157**	**309**	**1,360**	**1,349**	**1,350**	**1,502**	3,192	3,192
INPUT FUTURE	327	31	159	309	1,378	1,349	1,349	1,502	3,213	3,192
									-21.07	

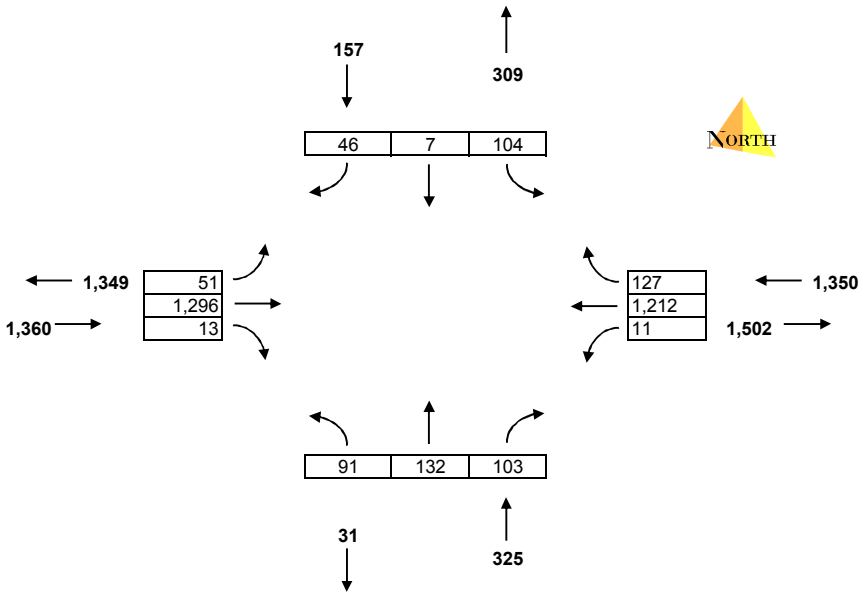

* Turn Calculation Output from NCHRP 255

Insert data into cells with blue font : HEADER INFO, BASE YEAR TURN MOVEMENTS, FUTURE YEAR LINK VOLUMES

OUTPUT DATA IS IN BOLD PRINT.

INTERSECTION :	TV Hwy @ Cornelius Pass		
SCENARIO :	2035 with 2012 UGB Buildout - Without South Hillsboro		
PEAK HOUR :	AM		
BASE YEAR :	2011	EAST-WEST ROAD:	TV Hwy
FUTURE YEAR :	2035	NORTH-SOUTH ROAD:	Cornelius Pass

	PEAK HOUR TURNING MOVEMENTS											
	NORTHBOUND			SOUTHBOUND			EASTBOUND			WESTBOUND		
YEAR	Left	Thru	Right	Left	Thru	Right	Left	Thru	Right	Left	Thru	Right
BASE YEAR	1	1	1	380	1	150	110	1,220	1	1	1,175	330
OUTPUT FUTURE	**1**	**2**	**1**	**482**	**2**	**154**	**159**	**1,203**	**1**	**2**	**1,152**	**587**

	PEAK HOUR DIRECTIONAL LINK VOLUMES									
	SOUTHLEG		NORTHLEG		WESTLEG		EASTLEG		ALL LEGS	
YEAR	In	Out	In	Out	In	Out	In	Out	In	Out
BASE YEAR	3	3	531	441	1,331	1,326	1,506	1,601	3,371	3,371
OUTPUT FUTURE	**5**	**5**	**638**	**748**	**1,363**	**1,307**	**1,741**	**1,686**	3,746	3,746
INPUT FUTURE	5	5	658	748	1,406	1,307	1,798	1,686	3,866	3,746
										-120.6

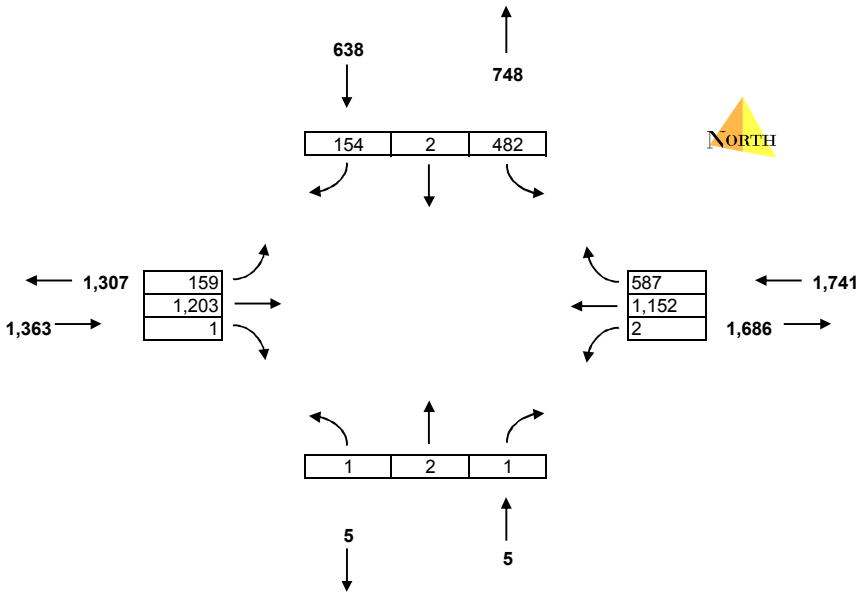

* Turn Calculation Output from NCHRP 255

Insert data into cells with blue font : HEADER INFO, BASE YEAR TURN MOVEMENTS, FUTURE YEAR LINK VOLUMES

OUTPUT DATA IS IN BOLD PRINT.

INTERSECTION :	TV Hwy @ 209th Av e		
SCENARIO :	2035 with 2012 UGB Buildout - Without South Hillsboro		
PEAK HOUR :	AM		
BASE YEAR :	2011	EAST-WEST ROAD:	TV Hwy
FUTURE YEAR :	2035	NORTH-SOUTH ROAD:	209

	PEAK HOUR TURNING MOVEMENTS											
	NORTHBOUND			SOUTHBOUND			EASTBOUND			WESTBOUND		
YEAR	Left	Thru	Right	Left	Thru	Right	Left	Thru	Right	Left	Thru	Right
BASE YEAR	305	195	90	35	70	25	5	1,410	255	65	1,270	15
OUTPUT FUTURE	**418**	**362**	**79**	**39**	**76**	**43**	**11**	**1,466**	**261**	**46**	**1,439**	**23**

	PEAK HOUR DIRECTIONAL LINK VOLUMES									
	SOUTHLEG		NORTHLEG		WESTLEG		EASTLEG		ALL LEGS	
YEAR	In	Out	In	Out	In	Out	In	Out	In	Out
BASE YEAR	590	390	130	215	1,670	1,600	1,350	1,535	3,740	3,740
OUTPUT FUTURE	**859**	**384**	**158**	**396**	**1,739**	**1,901**	**1,508**	**1,583**	4,264	4,264
INPUT FUTURE	853	384	159	396	1,757	1,901	1,493	1,583	4,262	4,264
									1.936	

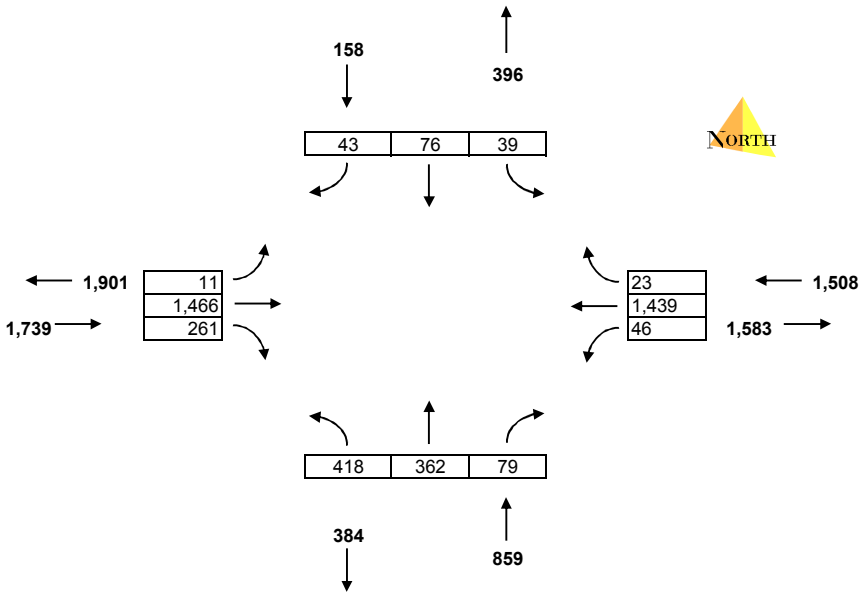

* Turn Calculation Output from NCHRP 255

Insert data into cells with blue font : HEADER INFO, BASE YEAR TURN MOVEMENTS, FUTURE YEAR LINK VOLUMES

OUTPUT DATA IS IN BOLD PRINT.

INTERSECTION :	TV Hwy @ 198th		
SCENARIO :	2035 with 2012 UGB Buildout - Without South Hillsboro		
PEAK HOUR :	AM		
BASE YEAR :	2011	EAST-WEST ROAD:	TV Hwy
FUTURE YEAR :	2035	NORTH-SOUTH ROAD:	198

	PEAK HOUR TURNING MOVEMENTS											
	NORTHBOUND			SOUTHBOUND			EASTBOUND			WESTBOUND		
YEAR	Left	Thru	Right	Left	Thru	Right	Left	Thru	Right	Left	Thru	Right
BASE YEAR	270	290	385	180	135	30	20	1,295	150	175	935	80
OUTPUT FUTURE	**308**	**456**	**326**	**207**	**168**	**46**	**37**	**1,299**	**163**	**153**	**1,018**	**120**

	PEAK HOUR DIRECTIONAL LINK VOLUMES									
	SOUTHLEG		NORTHLEG		WESTLEG		EASTLEG		ALL LEGS	
YEAR	In	Out	In	Out	In	Out	In	Out	In	Out
BASE YEAR	945	460	345	390	1,465	1,235	1,190	1,860	3,945	3,945
OUTPUT FUTURE	**1,091**	**484**	**421**	**614**	**1,499**	**1,372**	**1,291**	**1,832**	4,302	4,302
INPUT FUTURE	1,100	484	425	614	1,512	1,372	1,300	1,832	4,337	4,302
									-35.42	

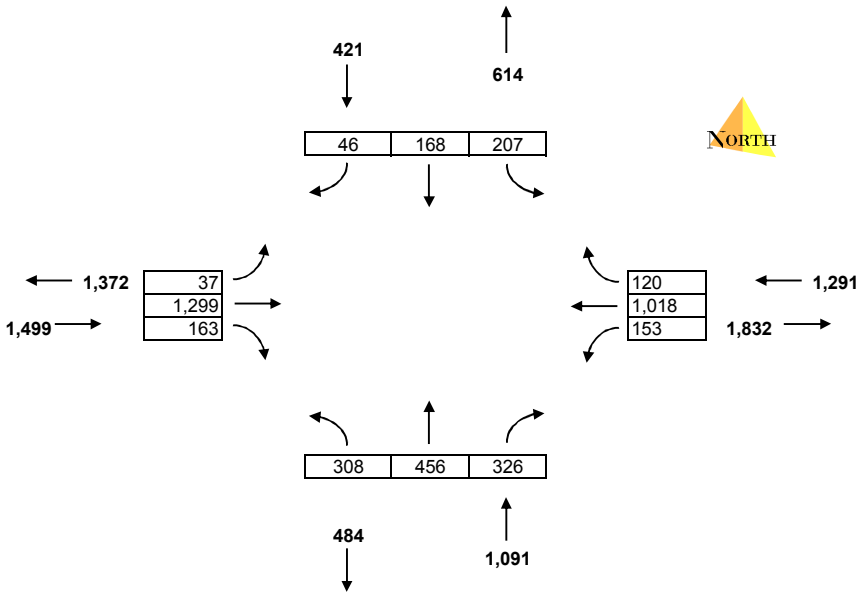

* Turn Calculation Output from NCHRP 255

Insert data into cells with blue font : HEADER INFO, BASE YEAR TURN MOVEMENTS, FUTURE YEAR LINK VOLUMES

OUTPUT DATA IS IN BOLD PRINT.

INTERSECTION :	TV Hwy @ 185th Ave		
SCENARIO :	2035 with 2012 UGB Buildout - Without South Hillsboro		
PEAK HOUR :	AM		
BASE YEAR :	2011	EAST-WEST ROAD:	TV Hwy
FUTURE YEAR :	2035	NORTH-SOUTH ROAD:	185

	PEAK HOUR TURNING MOVEMENTS											
	NORTHBOUND			SOUTHBOUND			EASTBOUND			WESTBOUND		
YEAR	Left	Thru	Right	Left	Thru	Right	Left	Thru	Right	Left	Thru	Right
BASE YEAR	180	515	135	235	345	125	165	1,535	95	95	910	155
OUTPUT FUTURE	**351**	**886**	**198**	**162**	**488**	**114**	**176**	**1,400**	**178**	**138**	**859**	**129**

	PEAK HOUR DIRECTIONAL LINK VOLUMES									
	SOUTHLEG		NORTHLEG		WESTLEG		EASTLEG		ALL LEGS	
YEAR	In	Out	In	Out	In	Out	In	Out	In	Out
BASE YEAR	830	535	705	835	1,795	1,215	1,160	1,905	4,490	4,490
OUTPUT FUTURE	**1,436**	**804**	**764**	**1,191**	**1,754**	**1,325**	**1,126**	**1,760**	5,080	5,080
INPUT FUTURE	1,439	804	766	1,191	1,759	1,325	1,129	1,760	5,094	5,080
									-13.87	

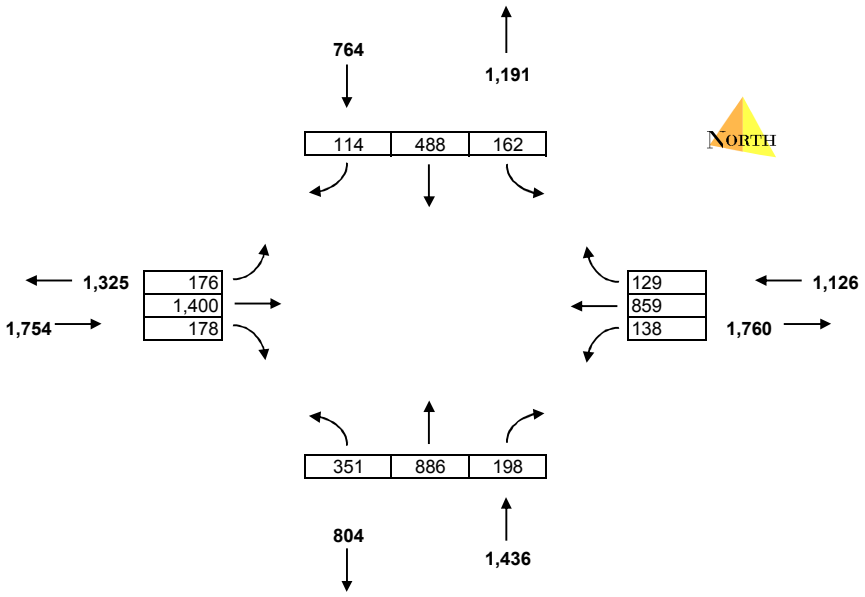

* Turn Calculation Output from NCHRP 255

Insert data into cells with blue font : HEADER INFO, BASE YEAR TURN MOVEMENTS, FUTURE YEAR LINK VOLUMES

OUTPUT DATA IS IN BOLD PRINT.

INTERSECTION :	River Rd @ Minter Bridge		
SCENARIO :	2035 with 2012 UGB Buildout - Without South Hillsboro		
PEAK HOUR :	AM		
BASE YEAR :	2011	EAST-WEST ROAD:	River Rd
FUTURE YEAR :	2035	NORTH-SOUTH ROAD:	Minter Br

	PEAK HOUR TURNING MOVEMENTS											
	NORTHBOUND			SOUTHBOUND			EASTBOUND			WESTBOUND		
YEAR	Left	Thru	Right	Left	Thru	Right	Left	Thru	Right	Left	Thru	Right
BASE YEAR	90	280	45	135	165	25	35	230	135	25	305	150
OUTPUT FUTURE	**146**	**362**	**49**	**113**	**176**	**31**	**41**	**224**	**167**	**32**	**462**	**181**

	PEAK HOUR DIRECTIONAL LINK VOLUMES									
	SOUTHLEG		NORTHLEG		WESTLEG		EASTLEG		ALL LEGS	
YEAR	In	Out	In	Out	In	Out	In	Out	In	Out
BASE YEAR	415	325	325	465	400	420	480	410	1,620	1,620
OUTPUT FUTURE	**556**	**375**	**321**	**584**	**432**	**639**	**675**	**386**	1,984	1,984
INPUT FUTURE	568	375	328	584	442	639	689	386	2,027	1,984
									42.53	

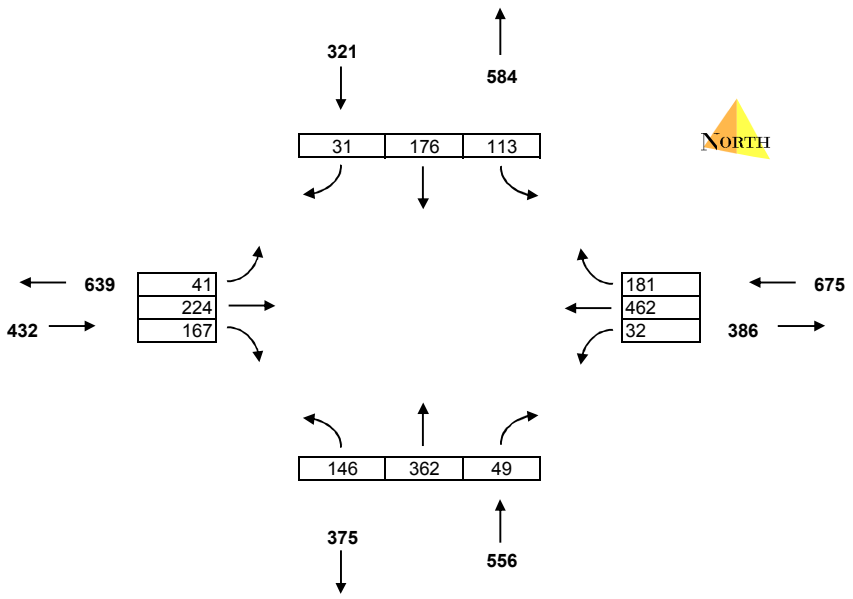

* Turn Calculation Output from NCHRP 255

Insert data into cells with blue font : HEADER INFO, BASE YEAR TURN MOVEMENTS, FUTURE YEAR LINK VOLUMES

OUTPUT DATA IS IN BOLD PRINT.

INTERSECTION :	Farmington @ 209th		
SCENARIO :	2035 with 2012 UGB Buildout - Without South Hillsboro		
PEAK HOUR :	AM		
BASE YEAR :	2011	EAST-WEST ROAD:	Farmington
FUTURE YEAR :	2035	NORTH-SOUTH ROAD:	209

	PEAK HOUR TURNING MOVEMENTS											
	NORTHBOUND			SOUTHBOUND			EASTBOUND			WESTBOUND		
YEAR	Left	Thru	Right	Left	Thru	Right	Left	Thru	Right	Left	Thru	Right
BASE YEAR	20	295	50	100	165	95	115	255	10	25	160	160
OUTPUT FUTURE	**27**	**405**	**101**	**159**	**121**	**99**	**115**	**376**	**7**	**26**	**238**	**246**

	PEAK HOUR DIRECTIONAL LINK VOLUMES									
	SOUTHLEG		NORTHLEG		WESTLEG		EASTLEG		ALL LEGS	
YEAR	In	Out	In	Out	In	Out	In	Out	In	Out
BASE YEAR	365	200	360	570	380	275	345	405	1,450	1,450
OUTPUT FUTURE	**533**	**154**	**378**	**766**	**498**	**363**	**510**	**636**	1,919	1,919
INPUT FUTURE	538	154	382	766	503	363	515	636	1,938	1,919
									-18.53	

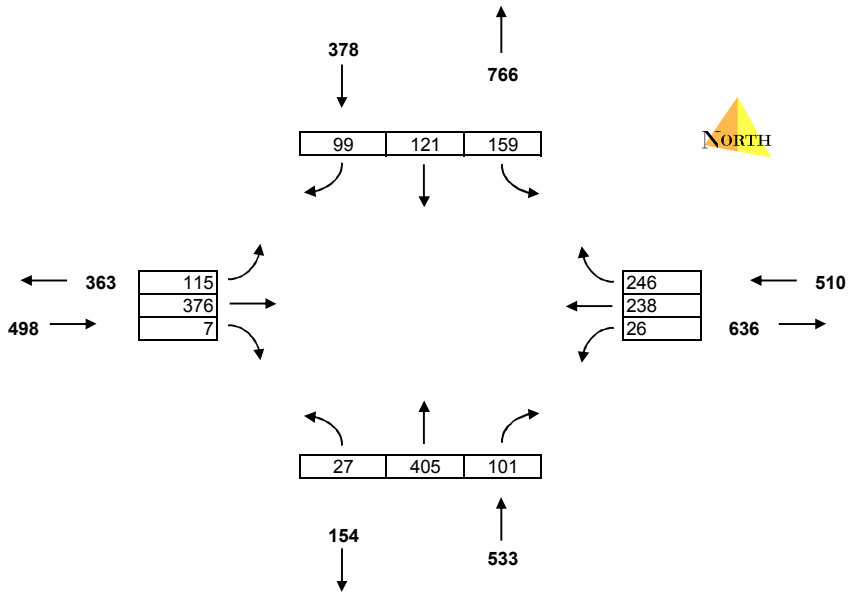

* Turn Calculation Output from NCHRP 255

Insert data into cells with blue font : HEADER INFO, BASE YEAR TURN MOVEMENTS, FUTURE YEAR LINK VOLUMES

OUTPUT DATA IS IN BOLD PRINT.

INTERSECTION :	Kinnaman (north) @ 198th		
SCENARIO :	2035 with 2012 UGB Buildout - Without South Hillsboro		
PEAK HOUR :	AM		
BASE YEAR :	2011	EAST-WEST ROAD:	Kinnaman (n)
FUTURE YEAR :	2035	NORTH-SOUTH ROAD:	198

	PEAK HOUR TURNING MOVEMENTS											
	NORTHBOUND			SOUTHBOUND			EASTBOUND			WESTBOUND		
YEAR	Left	Thru	Right	Left	Thru	Right	Left	Thru	Right	Left	Thru	Right
BASE YEAR	0	625	145	145	180	0	0	0	0	35	0	200
OUTPUT FUTURE	**0**	**633**	**121**	**139**	**168**	**0**	**0**	**0**	**0**	**45**	**0**	**323**

	PEAK HOUR DIRECTIONAL LINK VOLUMES									
	SOUTHLEG		NORTHLEG		WESTLEG		EASTLEG		ALL LEGS	
YEAR	In	Out	In	Out	In	Out	In	Out	In	Out
BASE YEAR	770	215	325	825	0	0	235	290	1,330	1,330
OUTPUT FUTURE	**755**	**214**	**308**	**957**	**0**	**0**	**369**	**260**	1,431	1,431
INPUT FUTURE	750	214	306	957	0	0	367	260	1,422	1,431
									9.197	

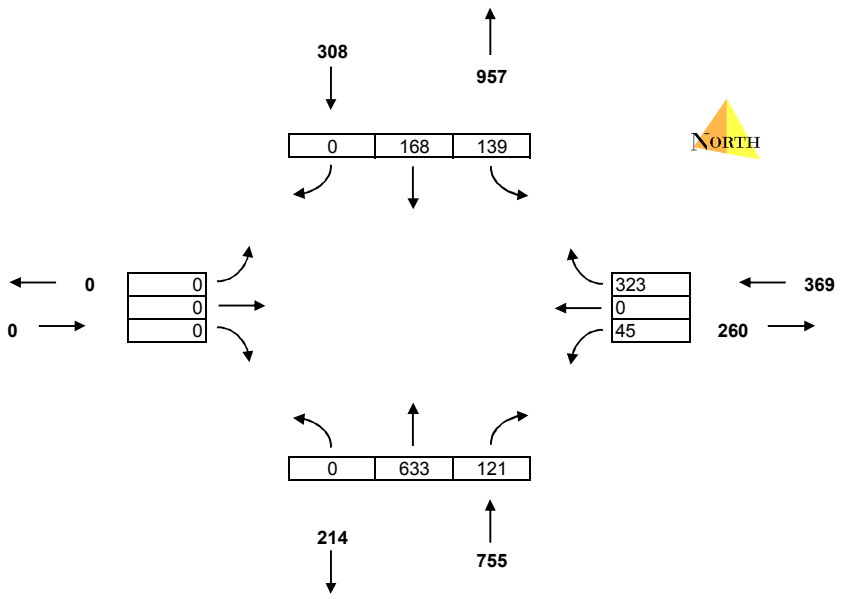

* Turn Calculation Output from NCHRP 255

Insert data into cells with blue font : HEADER INFO, BASE YEAR TURN MOVEMENTS, FUTURE YEAR LINK VOLUMES

OUTPUT DATA IS IN BOLD PRINT.

INTERSECTION :	Kinnaman @ 198th		
SCENARIO :	2035 with 2012 UGB Buildout - Without South Hillsboro		
PEAK HOUR :	AM		
BASE YEAR :	2011	EAST-WEST ROAD:	Kinnaman
FUTURE YEAR :	2035	NORTH-SOUTH ROAD:	198

	PEAK HOUR TURNING MOVEMENTS											
	NORTHBOUND			SOUTHBOUND			EASTBOUND			WESTBOUND		
YEAR	Left	Thru	Right	Left	Thru	Right	Left	Thru	Right	Left	Thru	Right
BASE YEAR	45	365	0	0	180	30	70	0	50	0	0	0
OUTPUT FUTURE	**97**	**357**	**0**	**0**	**160**	**50**	**62**	**0**	**52**	**0**	**0**	**0**

	PEAK HOUR DIRECTIONAL LINK VOLUMES									
	SOUTHLEG		NORTHLEG		WESTLEG		EASTLEG		ALL LEGS	
YEAR	In	Out	In	Out	In	Out	In	Out	In	Out
BASE YEAR	410	230	210	435	120	75	0	0	740	740
OUTPUT FUTURE	**454**	**212**	**210**	**419**	**115**	**147**	**0**	**0**	779	779
INPUT FUTURE	453	212	209	419	114	147	0	0	776	779
									2.247	

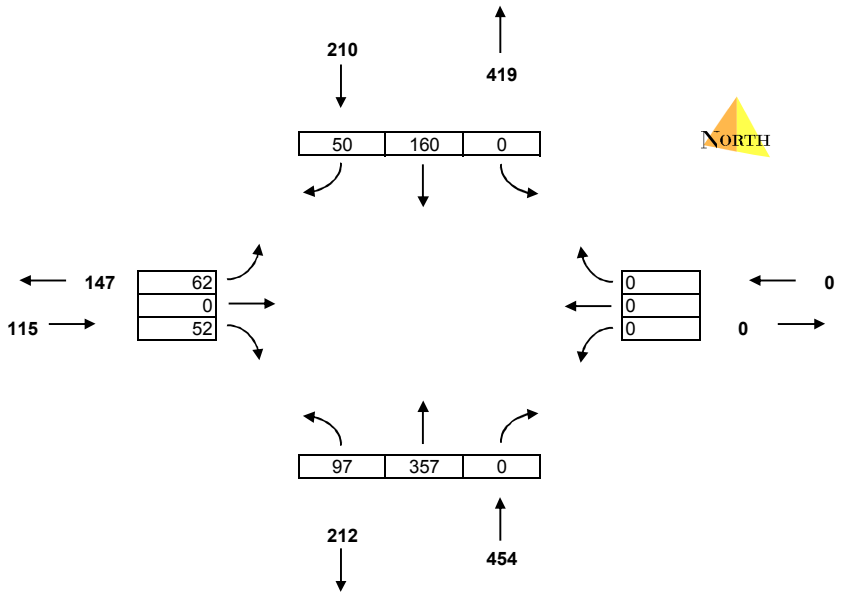

* Turn Calculation Output from NCHRP 255

Insert data into cells with blue font : HEADER INFO, BASE YEAR TURN MOVEMENTS, FUTURE YEAR LINK VOLUMES

OUTPUT DATA IS IN BOLD PRINT.

INTERSECTION :	Kinnaman @ 185th		
SCENARIO :	2035 with 2012 UGB Buildout - Without South Hillsboro		
PEAK HOUR :	AM		
BASE YEAR :	2011	EAST-WEST ROAD:	Kinnaman
FUTURE YEAR :	2035	NORTH-SOUTH ROAD:	185

	PEAK HOUR TURNING MOVEMENTS											
	NORTHBOUND			SOUTHBOUND			EASTBOUND			WESTBOUND		
YEAR	Left	Thru	Right	Left	Thru	Right	Left	Thru	Right	Left	Thru	Right
BASE YEAR	85	395	35	90	200	100	135	345	65	75	290	145
OUTPUT FUTURE	**165**	**900**	**70**	**134**	**315**	**144**	**141**	**318**	**63**	**114**	**404**	**237**

	PEAK HOUR DIRECTIONAL LINK VOLUMES									
	SOUTHLEG		NORTHLEG		WESTLEG		EASTLEG		ALL LEGS	
YEAR	In	Out	In	Out	In	Out	In	Out	In	Out
BASE YEAR	515	340	390	675	545	475	510	470	1,960	1,960
OUTPUT FUTURE	**1,136**	**493**	**593**	**1,278**	**522**	**713**	**755**	**522**	3,006	3,006
INPUT FUTURE	1,141	493	595	1,278	524	713	758	522	3,018	3,006
									-12.14	

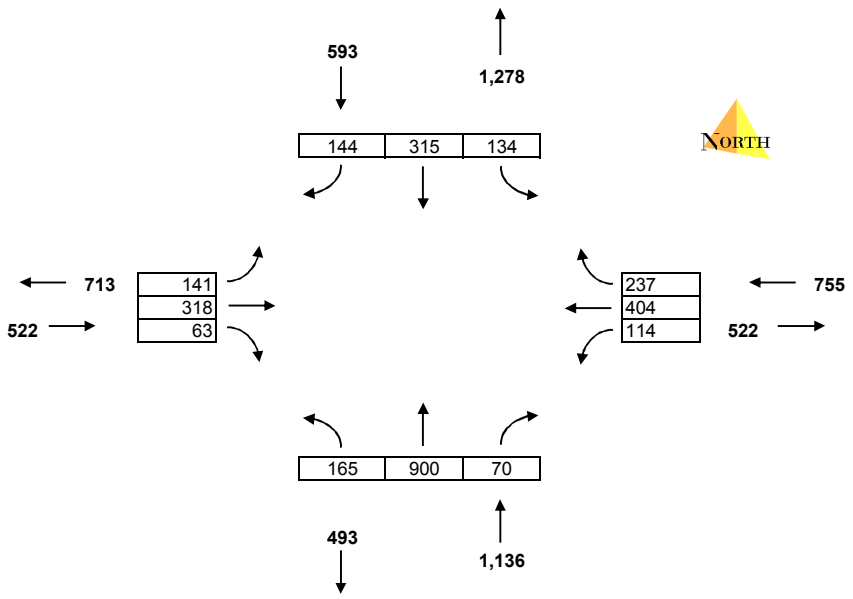

* Turn Calculation Output from NCHRP 255

Insert data into cells with blue font : HEADER INFO, BASE YEAR TURN MOVEMENTS, FUTURE YEAR LINK VOLUMES

OUTPUT DATA IS IN BOLD PRINT.

INTERSECTION :	Farmington @ 198th		
SCENARIO :	2035 with 2012 UGB Buildout - Without South Hillsboro		
PEAK HOUR :	AM		
BASE YEAR :	2011	EAST-WEST ROAD:	Farmington
FUTURE YEAR :	2035	NORTH-SOUTH ROAD:	198

	PEAK HOUR TURNING MOVEMENTS											
	NORTHBOUND			SOUTHBOUND			EASTBOUND			WESTBOUND		
YEAR	Left	Thru	Right	Left	Thru	Right	Left	Thru	Right	Left	Thru	Right
BASE YEAR	0	0	0	200	0	80	125	440	0	0	355	140
OUTPUT FUTURE	**0**	**0**	**0**	**313**	**0**	**93**	**173**	**739**	**0**	**0**	**489**	**215**

	PEAK HOUR DIRECTIONAL LINK VOLUMES									
	SOUTHLEG		NORTHLEG		WESTLEG		EASTLEG		ALL LEGS	
YEAR	In	Out	In	Out	In	Out	In	Out	In	Out
BASE YEAR	0	0	280	265	565	435	495	640	1,340	1,340
OUTPUT FUTURE	**0**	**0**	**406**	**388**	**912**	**582**	**704**	**1,052**	2,022	2,022
INPUT FUTURE	0	0	409	388	919	582	710	1,052	2,037	2,022
									-15.17	

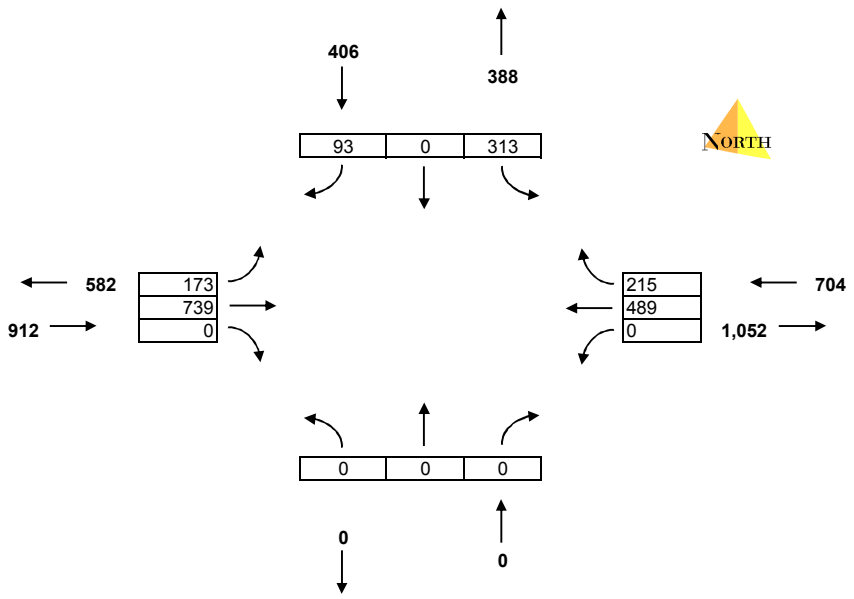

* Turn Calculation Output from NCHRP 255

Insert data into cells with blue font : HEADER INFO, BASE YEAR TURN MOVEMENTS, FUTURE YEAR LINK VOLUMES

OUTPUT DATA IS IN BOLD PRINT.

INTERSECTION :	Farmington @ 185th		
SCENARIO :	2035 with 2012 UGB Buildout - Without South Hillsboro		
PEAK HOUR :	AM		
BASE YEAR :	2011	EAST-WEST ROAD:	Farmington
FUTURE YEAR :	2035	NORTH-SOUTH ROAD:	185

	PEAK HOUR TURNING MOVEMENTS											
	NORTHBOUND			SOUTHBOUND			EASTBOUND			WESTBOUND		
YEAR	Left	Thru	Right	Left	Thru	Right	Left	Thru	Right	Left	Thru	Right
BASE YEAR	180	325	120	75	190	80	115	630	105	35	240	30
OUTPUT FUTURE	**177**	**530**	**132**	**132**	**209**	**126**	**319**	**1,175**	**123**	**46**	**448**	**93**

	PEAK HOUR DIRECTIONAL LINK VOLUMES									
	SOUTHLEG		NORTHLEG		WESTLEG		EASTLEG		ALL LEGS	
YEAR	In	Out	In	Out	In	Out	In	Out	In	Out
BASE YEAR	625	330	345	470	850	500	305	825	2,125	2,125
OUTPUT FUTURE	**839**	**378**	**467**	**942**	**1,617**	**751**	**587**	**1,438**	3,509	3,509
INPUT FUTURE	852	378	475	942	1,642	751	596	1,438	3,565	3,509
									-55.4	

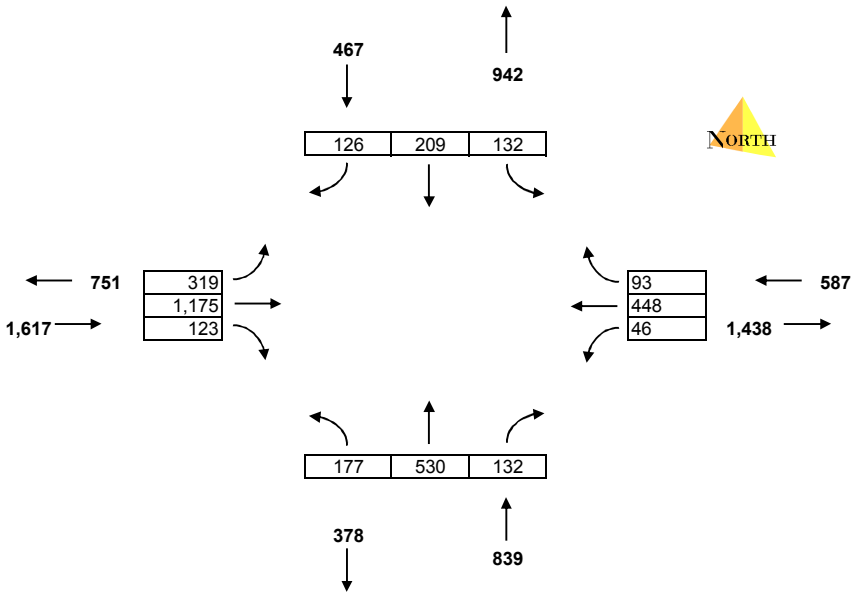

* Turn Calculation Output from NCHRP 255

Insert data into cells with blue font : HEADER INFO, BASE YEAR TURN MOVEMENTS, FUTURE YEAR LINK VOLUMES

OUTPUT DATA IS IN BOLD PRINT.

INTERSECTION :	Cornelius Pass Rd @ johnson St		
SCENARIO :	2035 with 2012 UGB Buildout - Without South Hillsboro		
PEAK HOUR :	AM		
BASE YEAR :	2011	EAST-WEST ROAD:	Johnson St
FUTURE YEAR :	2035	NORTH-SOUTH ROAD:	Cornelius Pass

	PEAK HOUR TURNING MOVEMENTS											
	NORTHBOUND			SOUTHBOUND			EASTBOUND			WESTBOUND		
YEAR	Left	Thru	Right	Left	Thru	Right	Left	Thru	Right	Left	Thru	Right
BASE YEAR	85	310	80	15	295	15	20	50	145	250	15	35
OUTPUT FUTURE	**148**	**573**	**71**	**21**	**221**	**41**	**79**	**95**	**147**	**290**	**63**	**158**

	PEAK HOUR DIRECTIONAL LINK VOLUMES									
	SOUTHLEG		NORTHLEG		WESTLEG		EASTLEG		ALL LEGS	
YEAR	In	Out	In	Out	In	Out	In	Out	In	Out
BASE YEAR	475	690	325	365	215	115	300	145	1,315	1,315
OUTPUT FUTURE	**792**	**658**	**283**	**809**	**321**	**252**	**511**	**187**	1,907	1,907
INPUT FUTURE	748	658	267	809	303	252	482	187	1,801	1,907
									-106	

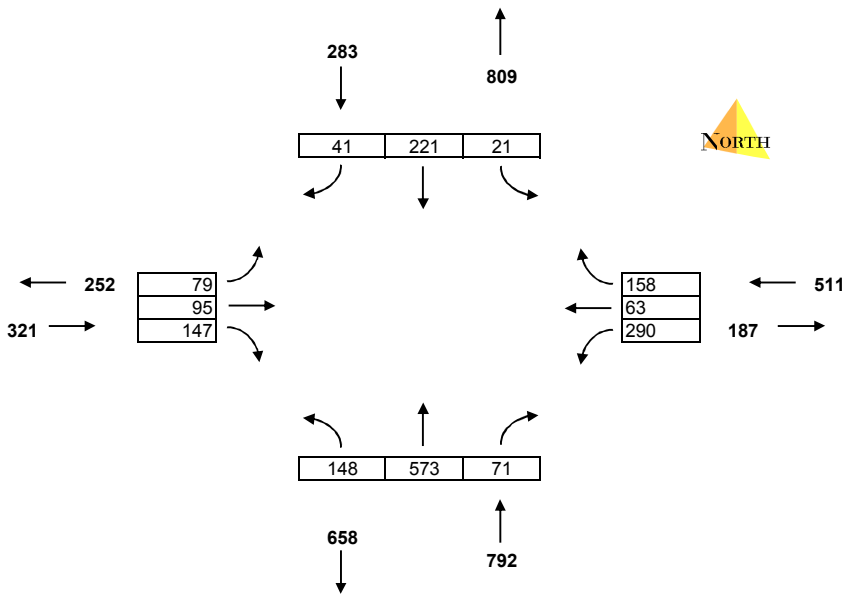

* Turn Calculation Output from NCHRP 255

Insert data into cells with blue font : HEADER INFO, BASE YEAR TURN MOVEMENTS, FUTURE YEAR LINK VOLUMES

OUTPUT DATA IS IN BOLD PRINT.

INTERSECTION :	198th Ave @ Blanton (south)		
SCENARIO :	2035 with 2012 UGB Buildout - Without South Hillsboro		
PEAK HOUR :	AM		
BASE YEAR :	2011	EAST-WEST ROAD:	Blanton (South)
FUTURE YEAR :	2035	NORTH-SOUTH ROAD:	198

	PEAK HOUR TURNING MOVEMENTS											
	NORTHBOUND			SOUTHBOUND			EASTBOUND			WESTBOUND		
YEAR	Left	Thru	Right	Left	Thru	Right	Left	Thru	Right	Left	Thru	Right
BASE YEAR	150	315	0	0	145	180	485	0	150	0	0	0
OUTPUT FUTURE	**157**	**376**	**0**	**0**	**145**	**173**	**465**	**0**	**131**	**0**	**0**	**0**

	PEAK HOUR DIRECTIONAL LINK VOLUMES									
	SOUTHLEG		NORTHLEG		WESTLEG		EASTLEG		ALL LEGS	
YEAR	In	Out	In	Out	In	Out	In	Out	In	Out
BASE YEAR	465	295	325	800	635	330	0	0	1,425	1,425
OUTPUT FUTURE	**533**	**277**	**318**	**841**	**596**	**330**	**0**	**0**	1,447	1,447
INPUT FUTURE	567	277	339	841	635	330	0	0	1,541	1,447

94

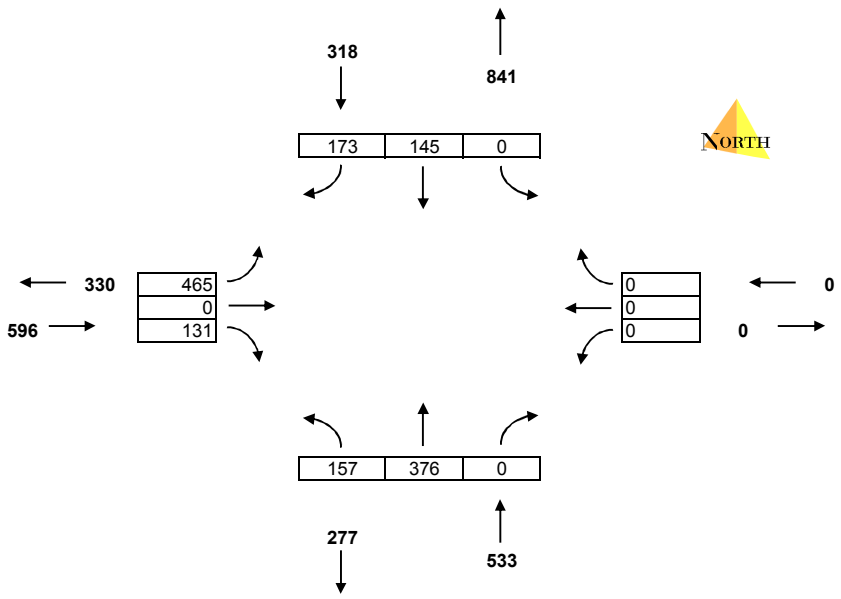

* Turn Calculation Output from NCHRP 255

Insert data into cells with blue font : HEADER INFO, BASE YEAR TURN MOVEMENTS, FUTURE YEAR LINK VOLUMES

OUTPUT DATA IS IN BOLD PRINT.

INTERSECTION :	198th Ave @ Blanton St North		
SCENARIO :	2035 with 2012 UGB Buildout - Without South Hillsboro		
PEAK HOUR :	AM		
BASE YEAR :	2011	EAST-WEST ROAD:	Blanton St (North)
FUTURE YEAR :	2035	NORTH-SOUTH ROAD:	198

	PEAK HOUR TURNING MOVEMENTS											
	NORTHBOUND			SOUTHBOUND			EASTBOUND			WESTBOUND		
YEAR	Left	Thru	Right	Left	Thru	Right	Left	Thru	Right	Left	Thru	Right
BASE YEAR	0	700	100	280	255	0	0	0	0	50	0	255
OUTPUT FUTURE	**0**	**799**	**104**	**246**	**274**	**0**	**0**	**0**	**0**	**65**	**0**	**301**

	PEAK HOUR DIRECTIONAL LINK VOLUMES									
	SOUTHLEG		NORTHLEG		WESTLEG		EASTLEG		ALL LEGS	
YEAR	In	Out	In	Out	In	Out	In	Out	In	Out
BASE YEAR	800	305	535	955	0	0	305	380	1,640	1,640
OUTPUT FUTURE	**902**	**339**	**519**	**1,100**	**0**	**0**	**367**	**349**	1,788	1,788
INPUT FUTURE	841	339	484	1,100	0	0	341	349	1,666	1,788
									-122.3	

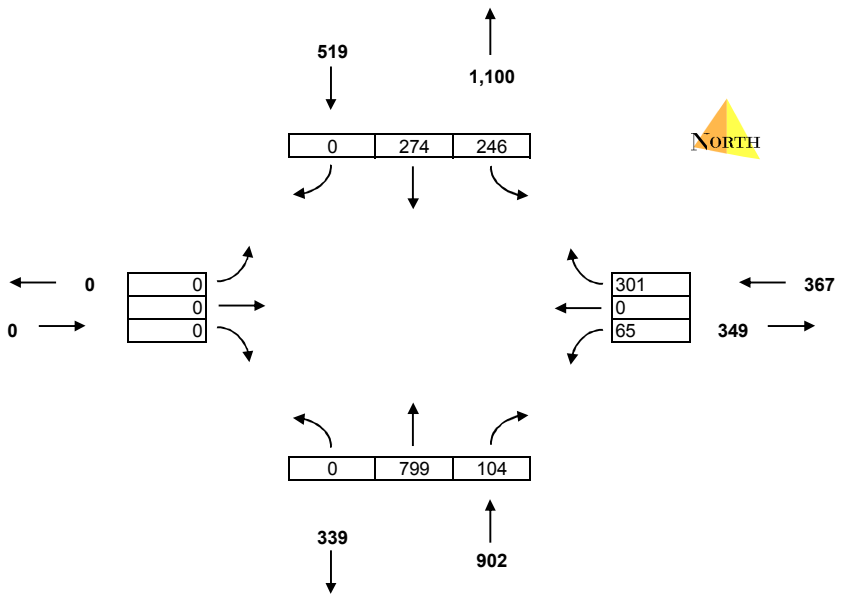

* Turn Calculation Output from NCHRP 255

Insert data into cells with blue font : HEADER INFO, BASE YEAR TURN MOVEMENTS, FUTURE YEAR LINK VOLUMES

OUTPUT DATA IS IN BOLD PRINT.

INTERSECTION :	185th Ave @ Blanton St (South)		
SCENARIO :	2035 with 2012 UGB Buildout - Without South Hillsboro		
PEAK HOUR :	AM		
BASE YEAR :	2011	EAST-WEST ROAD:	Blanton (South)
FUTURE YEAR :	2035	NORTH-SOUTH ROAD:	185

	PEAK HOUR TURNING MOVEMENTS											
	NORTHBOUND			SOUTHBOUND			EASTBOUND			WESTBOUND		
YEAR	Left	Thru	Right	Left	Thru	Right	Left	Thru	Right	Left	Thru	Right
BASE YEAR	0	685	135	130	430	0	0	0	0	60	0	155
OUTPUT FUTURE	**0**	**1,330**	**157**	**131**	**648**	**0**	**0**	**0**	**0**	**75**	**0**	**214**

	PEAK HOUR DIRECTIONAL LINK VOLUMES									
	SOUTHLEG		NORTHLEG		WESTLEG		EASTLEG		ALL LEGS	
YEAR	In	Out	In	Out	In	Out	In	Out	In	Out
BASE YEAR	820	490	560	840	0	0	215	265	1,595	1,595
OUTPUT FUTURE	**1,487**	**722**	**778**	**1,544**	**0**	**0**	**288**	**288**	2,554	2,554
INPUT FUTURE	1,484	722	779	1,544	0	0	288	288	2,551	2,554
									-2.823	

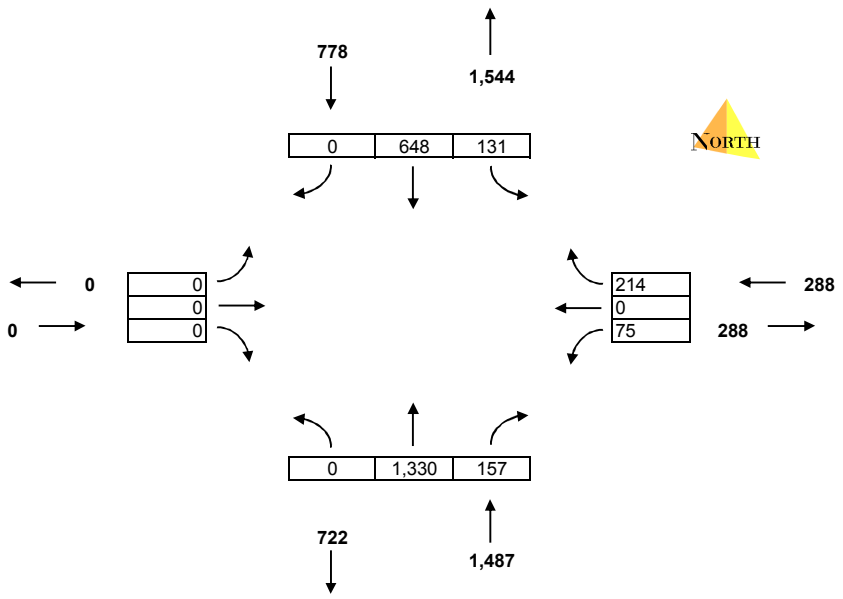

* Turn Calculation Output from NCHRP 255

Insert data into cells with blue font : HEADER INFO, BASE YEAR TURN MOVEMENTS, FUTURE YEAR LINK VOLUMES

OUTPUT DATA IS IN BOLD PRINT.

INTERSECTION :	185th Ave @ Blanton North		
SCENARIO :	2035 with 2012 UGB Buildout - Without South Hillsboro		
PEAK HOUR :	AM		
BASE YEAR :	2011	EAST-WEST ROAD:	Blanton (north)
FUTURE YEAR :	2035	NORTH-SOUTH ROAD:	185

	PEAK HOUR TURNING MOVEMENTS											
	NORTHBOUND			SOUTHBOUND			EASTBOUND			WESTBOUND		
YEAR	Left	Thru	Right	Left	Thru	Right	Left	Thru	Right	Left	Thru	Right
BASE YEAR	110	640	0	0	460	110	225	0	90	0	0	0
OUTPUT FUTURE	**137**	**1,280**	**0**	**0**	**699**	**123**	**206**	**0**	**70**	**0**	**0**	**0**

	PEAK HOUR DIRECTIONAL LINK VOLUMES									
	SOUTHLEG		NORTHLEG		WESTLEG		EASTLEG		ALL LEGS	
YEAR	In	Out	In	Out	In	Out	In	Out	In	Out
BASE YEAR	750	550	570	865	315	220	0	0	1,635	1,635
OUTPUT FUTURE	**1,417**	**769**	**823**	**1,486**	**276**	**260**	**0**	**0**	2,515	2,515
INPUT FUTURE	1,454	769	848	1,486	283	260	0	0	2,585	2,515
									69.77	

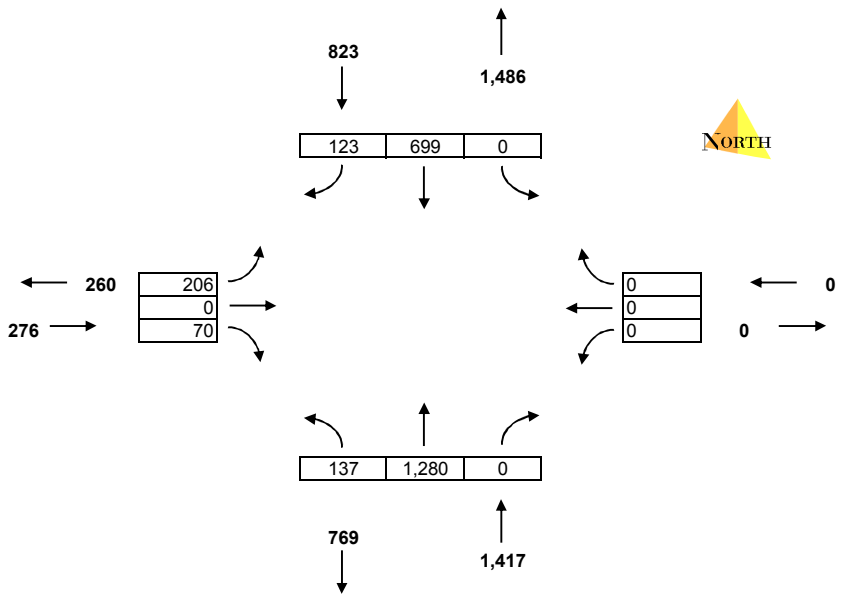

* Turn Calculation Output from NCHRP 255

Project: South Hillsboro Focus Area Plan
Job #: ODOT0000-0737
Subject: ***PM Build Turning Movement Volumes***
Created: 6/8/2011
Rev. Date: 3/5/2013

Less than Existing Less than TV Hwy Base

Int No.	Synchro ID	Intersection	Direction	Movement	2,011 Existing BALANCED DHV 1-Hr Volume PM Peak	2010 Hillsboro Model Turn Volumes	41,316 2035 w/o SoHi Model Turn Volumes	2035 SoHi - 2010 Turn Vol Diff	2035 SoHi Network Unbalanced	Difference (Volume Adjustment)	2035 SoHi Network Adjusted	Vol Balance - Combined Internal + External	2035 SoHi Network Balanced w/229th
1	10	TV Highway @ SE River Rd.*		EBL	15	0	0	0	15		15	0	15
	10	2 hr PM Turning Movement Count	EB	EBT	1,185	1,006	1,191	185	1,370		1,370	(170)	1,200
	10	Count Date: 5/20/2010		EBR	340	313	437	124	465		465	0	465
	10	2010		WBL	25	31	44	13	40		40	0	40
	10		WB	WBT	1,040	826	843	17	1,055		1,055	0	1,055
	10			WBR	85	76	48	(28)	55	30	85	0	85
	10			NBL	240	303	288	(15)	225	15	240	0	240
	10		NB	NBT	135	85	45	(40)	95	40	135	0	135
	10			NBR	25	3	0	(3)	20	5	25	0	25
	10			SBL	55	45	15	(30)	25	30	55	0	55
	10		SB	SBT	70	157	264	107	175		175	(50)	125
	10			SBR	25	0	0	0	25		25	0	25
			TEV	**TEV**	**3,240**	**2,845**	**3,175**	**330**	**3,565**	**120**	**3,685**	**(220)**	**3,465**
12	70	Witch Hazel at Brookwood		EBL			247		245		245	(20)	225
	70		EB	EBT			0	5	5		5	0	5
	70	This intersection was balanced off the		EBR			15		15		15	0	15
	70	neighboring intersections and the combination		WBL			0	5	5		5	0	5
	70	of the surrounding SoHi area as well as the	WB	WBT			0	5	5		5	0	5
	70	SoHi area as well as the internal area. It did not		WBR			0	5	5		5	0	5
	70	go through the volume development process.		NBL			15		15		15	0	15
	70		NB	NBT			226		225		225	(20)	205
	70			NBR			0	5	5		5	0	5
	70			SBL			0	5	5		5	0	5
	70		SB	SBT			498		500		500	(50)	450
	70			SBR			339		340		340	(25)	315
			TEV	**TEV**	**0**	**0**	**1,340**	**30**	**1,370**	**0**	**1,370**	**(115)**	**1,255**
13	75	SE Alexander St. @ SE Brookwood Rd.		EBL	25	0	9	9	35		35		35
	75	2 hr PM Turning Movement Count	EB	EBT	30	0	1	1	30		30		30
	75	Count Date: 5/24/2011		EBR	0	0	0	0	0		0		0
	75	2011		WBL	10	0	16	16	25		25		25
	75		WB	WBT	40	0	0	0	40		40		40
	75			WBR	75	56	79	23	100		100		100
	75			NBL	0	0	0	0	0		0		0
	75		NB	NBT	85	173	153	(20)	65	20	85		85
	75			NBR	25	0	9	9	35		35		35
	75			SBL	45	36	80	44	90		90		90
	75		SB	SBT	95	243	396	153	250		250		250
	75			SBR	70	0	37	37	105		105		105
			TEV	**TEV**	**500**	**508**	**780**	**272**	**775**	**20**	**795**	**0**	**795**
18	120	SW 209th Ave. @ SW Blanton Rd.		EBL	0	0	0	0	0		0	0	0
	120	2 hr PM Turning Movement Count	EB	EBT	0	0	0	0	0		0	0	0
	120	Count Date: 5/18/2010		EBR	0	0	0	0	0		0	0	0
	120	2010		WBL	15	0	3	3	20		20	10	30
	120		WB	WBT	0	0	0	0	0		0	0	0
	120			WBR	35	0	10	10	45		45	0	40
	120			NBL	0	0	0	0	0		0	0	0
	120		NB	NBT	460	467	482	15	475		475	(10)	465
	120			NBR	20	0	0	0	20		20	0	20
	120			SBL	45	0	36	36	80		80	0	80
	120		SB	SBT	750	590	759	169	920		920	0	920
	120			SBR	0	0	0	0	0		0	0	0
			TEV	**TEV**	**1,325**	**1,057**	**1,290**	**233**	**1,560**	**0**	**1,560**	**0**	**1,555**
23	150	SW 209th Ave. @ SW Kinnaman Rd.		EBL	0	0	0	0	0		0	0	0
	150	2 hr PM Turning Movement Count	EB	EBT	0	0	0	0	0		0	0	0
	150	Count Date: 5/18/2010		EBR	0	0	0	0	0		0	0	0
	150	2010		WBL	10	10	4	(6)	5	5	10	0	10
	150		WB	WBT	0	0	0	0	0		0	0	0
	150			WBR	30	40	42	2	30		30	0	30
	150			NBL	0	0	0	0	0		0	0	0
	150		NB	NBT	445	297	308	11	455		455	0	455
	150			NBR	10	9	7	(2)	10		10	0	10
	150			SBL	45	72	131	59	105		105	0	105
	150		SB	SBT	700	438	585	147	845		845	0	845
	150			SBR	0	0	0	0	0		0	0	0
			TEV	**TEV**	**1,240**	**866**	**1,077**	**211**	**1,450**	**5**	**1,455**	**0**	**1,455**

Project: South Hillsboro Focus Area Plan
Job #: ODOT0000-0737
Subject: ***PM Build Turning Movement Volumes***
Created: 6/8/2011
Rev. Date: 3/5/2013

Less than Existing Less than TV Hwy Base

Int No.	Synchro ID	Intersection	Direction	Movement	Existing BALANCED DHV 1-Hr Volume PM Peak (2,011)	2010 Hillsboro Model Turn Volumes	2035 w/o SoHi Model Turn Volumes (41,316)	2035 SoHi - 2010 Turn Vol Diff	2035 SoHi Network Unbalanced	Difference (Volume Adjustment)	2035 SoHi Network Adjusted	Vol Balance - Combined Internal + External	2035 SoHi Network Balanced w/229th
28	180	SW 209th Ave. @ SW Rosa Rd.		EBL	0	0	0	0	0		0	0	0
	180	2 hr PM Turning Movement Count	EB	EBT	0	0	0	0	0		0	0	0
	180	Count Date: 4/1/2008		EBR	0	0	0	0	0		0	0	0
	180	2008		WBL	10	8	5	(3)	5	5	10	0	10
	180		WB	WBT	0	0	0	0	0		0	0	0
	180			WBR	20	0	48	48	70		70	0	70
	180			NBL	0	0	0	0	0		0	0	0
	180		NB	NBT	370	305	265	(40)	330	40	370	75	445
	180			NBR	30	2	6	4	35		35	5	40
	180			SBL	70	0	133	133	205		205	(5)	200
	180		SB	SBT	650	442	435	(7)	645	10	655	0	655
	180			SBR	0	0	0	0	0		0	0	0
			TEV	**TEV**	**1,150**	**757**	**892**	**135**	**1,290**	**55**	**1,345**	**75**	**1,420**
32	220	SW Rosedale Rd. @ SW 209th Ave.		EBL	35	95	121	26	60		60	0	60
	220	2 hr PM Turning Movement Count	EB	EBT	25	0	0	0	25		25	0	25
	220	Count Date: 5/18/2010		EBR	165	263	466	203	370		370	5	375
	220	2010		WBL	0	0	0	0	0		0	5	5
	220		WB	WBT	20	0	0	0	20		20	0	20
	220			WBR	15	0	0	0	15		15	0	15
	220			NBL	125	177	223	46	170		170	10	180
	220		NB	NBT	330	285	254	(31)	300	30	330	135	465
	220			NBR	10	0	0	0	10		10	20	30
	220			SBL	20	0	0	0	20		20	0	20
	220		SB	SBT	480	328	431	103	585		585	40	625
	220			SBR	35	57	50	(7)	30	10	40	0	40
			TEV	**TEV**	**1,260**	**1,205**	**1,545**	**340**	**1,605**	**40**	**1,645**	**215**	**1,860**

Project: South Hillsboro Focus Area Plan
Job #: ODOT0000-0737
Subject: *PM Turning Movement Volumes*
Created: 7/21/2012
Rev. Date: 3/5/2013

	Synchro ID	Intersection	Direction	Movement	2011 Final Balanced Volumes for Synchro - PM Peak	Direction Correctio 2035 Baseline NCHRP 255-Link Unbalanced	2010 UGB 2035 Baseline NCHRP 255-Link Unbalanced	No Hi + South Cooper Mtn Volumes	2035 Unbalanced	Vol Balance	2035 Balanced Volumes	Vol Balance - Combined Internal + External	2035 SoHi Network Balanced w/229th
2	13	TV Highway @ SE Cypress St.		EBL	120	117	120	0	120	0	120		120
	13	2 hr AM Turning Movement Count	EB	EBT	985	1,086	1,085	0	1,085	135	1,220		1,220
	13	Count Date: 5/20/2010		EBR	115	175	135	0	135	0	135		135
	13	2010		WBL	125	153	150	0	150	0	150		150
	13		WB	WBT	845	781	845	0	845	75	920		920
	13			WBR	90	70	90	0	90	0	90		90
	13			NBL	135	184	155	0	155	0	155		155
	13		NB	NBT	245	284	265	0	265	0	265		265
	13			NBR	120	158	160	0	160	0	160		160
	13			SBL	115	107	115	0	115	50	165		165
	13		SB	SBT	265	340	340	0	340	20	360		360
	13			SBR	125	121	125	0	125	30	155		155
			TEV		**3,285**	**3,575**	**3,585**	**0**	**3,585**	**310**	**3,895**	0	**3,895**
3	20	TV Highway @ SE Brookwood Ave.		EBL	140	161	160	0	160	(10)	150		150
	20	2 hr AM Turning Movement Count	EB	EBT	1,245	1,338	1,340	0	1,340	(95)	1,245		1,245
	20	Count Date: 1/30/2008		EBR	20	40	40	0	40	(5)	35	10	45
	20	2008		WBL	195	311	310	0	310	(10)	300		300
	20		WB	WBT	1,185	1,112	1,185	0	1,185	0	1,185		1,185
	20			WBR	210	194	195	0	195	(20)	175		175
	20			NBL	45	56	55	0	55	0	55		55
	20		NB	NBT	165	201	200	0	200	0	200		200
	20			NBR	150	170	170	0	170	0	170	10	180
	20			SBL	230	225	225	0	225	0	225		225
	20		SB	SBT	230	416	415	0	415	0	415	10	425
	20			SBR	110	117	115	0	115	0	115		115
			TEV		**3,925**	**4,342**	**4,410**	**0**	**4,410**	**(140)**	**4,270**	30	**4,300**
4	30	TV Highway @ SE Century Blvd./234th		EBL	120	127	125	0	125	0	125		125
	30	2 hr AM Turning Movement Count	EB	EBT	1,390	1,395	1,395	0	1,395	0	1,395		1,395
	30	Count Date: 9/27/2006		EBR	80	111	110	0	110	0	110		110
	30	2006		WBL	80	141	140	0	140	0	140		140
	30		WB	WBT	1,345	1,261	1,345	0	1,345	0	1,345		1,345
	30			WBR	70	94	95	0	95	0	95		95
	30			NBL	50	69	70	0	70	0	70		70
	30		NB	NBT	60	118	115	0	115	0	115		115
	30			NBR	95	177	140	0	140	0	140		140
	30			SBL	85	126	95	0	95	0	95		95
	30		SB	SBT	80	165	165	0	165	0	165		165
	30			SBR	145	160	160	0	160	0	160		160
			TEV		**3,600**	**3,943**	**3,955**	**0**	**3,955**	**0**	**3,955**	0	**3,955**
5	40	TV Highway @ SW 67th/229th Ave.		EBL	20	44	45	0	45	0	45		45
	40	2 hr AM Turning Movement Count	EB	EBT	1,435	1,489	1,490	0	1,490	0	1,490		1,490
	40	Count Date: 5/20/2010		EBR	20	52	50	0	50	0	50		50
	40	2010		WBL	30	53	30	0	30	0	30		30
	40		WB	WBT	1,430	1,424	1,430	0	1,430	20	1,450		1,450
	40			WBR	85	127	85	0	85	0	85		85
	40			NBL	20	13	70	0	70	0	70		70
	40		NB	NBT	40	38	40	0	40	0	40		40
	40			NBR	60	27	60	0	60	0	60		60
	40			SBL	115	119	75	0	75	0	75		75
	40		SB	SBT	35	90	90	0	90	0	90		90
	40			SBR	25	36	35	0	35	0	35		35
			TEV		**3,315**	**3,512**	**3,500**	**0**	**3,500**	**20**	**3,520**	0	**3,520**
6	50	TV Highway @ Cornelius Pass Rd./SW 219th A		EBL	155	131	130	0	130	25	155		155
	50	2 hr AM Turning Movement Count	EB	EBT	1,345	1,395	1,395	0	1,395	0	1,395		1,395
	50	Count Date: 5/25/2010		EBR	1	1	0	0	0	0	0		0
	50	2010		WBL	1	2	0	0	0	0	0		0
	50		WB	WBT	1,450	1,453	1,455	0	1,455	(5)	1,450		1,450
	50			WBR	255	303	305	0	305	0	305		305
	50			NBL	1	1	0	0	0	0	0		0
	50		NB	NBT	1	2	0	0	0	0	0		0
	50			NBR	1	2	0	0	0	0	0		0
	50			SBL	505	908	910	100	1,010	(410)	600		600
	50		SB	SBT	1	2	0	0	0	0	0		0
	50			SBR	185	229	230	0	230	(20)	210		210
			TEV		**3,901**	**4,430**	**4,425**	**100**	**4,525**	**(410)**	**4,115**	0	**4,115**
7	60	TV Highway @ SW 209th Ave./Anthony Dr		EBL	30	42	30	0	30	(10)	20		20
	60	2 hr AM Turning Movement Count	EB	EBT	1,355	1,655	1,410	0	1,410	0	1,410		1,410
	60	Count Date: 9/30/2009		EBR	440	592	440	100	540	0	540		540
	60	2009		WBL	140	145	145	0	145	0	145		145
	60		WB	WBT	1,545	1,559	1,560	0	1,560	0	1,560		1,560
	60			WBR	60	64	65	0	65	0	65		65
	60			NBL	170	189	170	0	170	(20)	150		150
	60		NB	NBT	190	225	225	0	225	0	225		225
	60			NBR	85	88	90	0	90	0	90		90
	60			SBL	30	40	40	0	40	0	40		40
	60		SB	SBT	185	270	270	0	270	0	270		270
	60			SBR	65	92	90	0	90	0	90		90
			TEV		**4,295**	**4,962**	**4,535**	**100**	**4,635**	**(30)**	**4,605**	0	**4,605**

Project: South Hillsboro Focus Area Plan
Job #: ODOT0000-0737
Subject: ***PM Turning Movement Volumes***
Created: 7/21/2012
Rev. Date: 3/5/2013

	Synchro ID	Intersection	Direction	Movement	2011 Final Balanced Volumes for Synchro - PM Peak	Direction Correctio 2035 Baseline NCHRP 255-Link Unbalanced	2010 UGB 2035 Baseline NCHRP 255-Link Unbalanced	No Hi + South Cooper Mtn Volumes	2035 Unbalanced	Vol Balance	2035 Balanced Volumes	Vol Balance - Combined Internal + External	2035 SoHi Network Balanced w/229th
8	65	TV Highway @ SW 198th Ave.		EBL	75	165	150	0	150	(5)	145		145
	65	2 hr AM Turning Movement Count	EB	EBT	1,140	1,415	1,330	0	1,330	(30)	1,300		1,300
	65	Count Date: 5/20/2010		EBR	300	241	230	0	230	0	230		230
	65	2010		WBL	240	110	200	0	200	0	200		200
	65		WB	WBT	1,350	1,396	1,400	0	1,400	0	1,400		1,400
	65			WBR	140	175	170	0	170	0	170		170
	65			NBL	255	166	205	0	205	0	205		205
	65		NB	NBT	205	161	190	0	190	0	190		190
	65			NBR	220	98	120	0	120	0	120		120
	65			SBL	140	226	225	0	225	0	225		225
	65		SB	SBT	250	261	275	50	325	(70)	255		255
	65			SBR	40	94	95	0	95	0	95		95
			TEV		**4,355**	**4,508**	**4,590**	**50**	**4,640**	**(105)**	**4,535**	0	**4,535**
9	111	TV Highway @ SW 185th Ave.		EBL	180	175	180	0	180	0	180		180
	111	2 hr AM Turning Movement Count	EB	EBT	1,125	1,221	1,200	0	1,200	(20)	1,180		1,180
	111	Count Date: 5/25/2010		EBR	195	363	365	0	365	0	365		365
	111	2010		WBL	195	306	400	0	400	(15)	385		385
	111		WB	WBT	1,450	1,296	1,450	0	1,450	0	1,450		1,450
	111			WBR	140	115	140	0	140	0	140		140
	111			NBL	190	310	310	0	310	(10)	300		300
	111		NB	NBT	415	622	610	0	610	0	610		610
	111			NBR	100	167	150	0	150	0	150		150
	111			SBL	220	203	210	0	210	0	210		210
	111		SB	SBT	535	847	725	150	875	(165)	710		710
	111			SBR	160	144	160	0	160	0	160		160
			TEV		**4,905**	**5,770**	**5,900**	**150**	**6,050**	**(210)**	**5,840**	0	**5,840**
11	12	SE River Rd. @ SE Minter Bridge Rd.		EBL	60	144	145	0	145	0	145		145
	12	2 hr AM Turning Movement Count	EB	EBT	380	558	560	0	560	0	560		560
	12	Count Date: 5/24/2011		EBR	90	152	150	0	150	0	150		150
	12	2011		WBL	50	40	50	0	50	0	50		50
	12		WB	WBT	310	297	310	0	310	0	310		310
	12			WBR	175	198	200	0	200	0	200		200
	12			NBL	50	62	60	0	60	0	60		60
	12		NB	NBT	195	288	290	0	290	0	290		290
	12			NBR	35	32	35	0	35	0	35		35
	12			SBL	220	275	275	0	275	0	275		275
	12		SB	SBT	220	315	315	0	315	0	315		315
	12			SBR	50	86	85	0	85	0	85		85
			TEV		**1,835**	**2,447**	**2,475**	**0**	**2,475**	**0**	**2,475**	0	**2,475**
33	230	Farmington @ 209th		EBL	105	156	155	0	155	0	155		155
	230		EB	EBT	215	361	360	0	360	40	400		400
	230			EBR	20	34	35	0	35	(15)	20		20
	230			WBL	50	76	75	50	125	(75)	50		50
	230		WB	WBT	265	375	375	0	375	100	475		475
	230			WBR	170	226	225	0	225	110	335		335
	230			NBL	5	4	5	0	5	0	5		5
	230		NB	NBT	185	128	185	0	185	0	185		185
	230			NBR	45	35	45	0	45	20	65		65
	230			SBL	185	271	270	0	270	0	270		270
	230		SB	SBT	285	427	425	100	525	0	525		525
	230			SBR	150	208	210	0	210	0	210		210
			TEV		**1,680**	**2,302**	**2,365**	**150**	**2,515**	**180**	**2,695**	0	**2,695**
24-N	48	Kinnaman (north) @ 198th		EBL	0	0	0	0	0	0	0		0
	48		EB	EBT	0	0	0	0	0	0	0		0
	48			EBR	0	0	0	0	0	0	0		0
	48			WBL	20	51	50	0	50	0	50		50
	48		WB	WBT	0	0	0	0	0	0	0		0
	48			WBR	170	148	170	0	170	0	170		170
	48			NBL	0	0	0	0	0	0	0		0
	48		NB	NBT	290	299	300	0	300	5	305		305
	48			NBR	25	90	90	0	90	0	90		90
	48			SBL	250	291	290	0	290	(20)	270		270
	48		SB	SBT	445	436	445	50	495	(40)	455		455
	48			SBR	0	0	0	0	0	0	0		0
			TEV		**1,200**	**1,315**	**1,345**	**50**	**1,395**	**(55)**	**1,340**	0	**1,340**
24-S	4	Kinnaman (south) @ 198th		EBL	75	130	130	0	130	0	130		130
	4		EB	EBT	0	0	0	0	0	0	0		0
	4			EBR	20	6	20	0	20	0	20		20
	4			WBL	0	0	0	0	0	0	0		0
	4		WB	WBT	0	0	0	0	0	0	0		0
	4			WBR	0	0	0	0	0	0	0		0
	4			NBL	25	6	25	0	25	0	25		25
	4		NB	NBT	240	264	265	0	265	0	265		265
	4			NBR	0	0	0	0	0	0	0		0
	4			SBL	0	0	0	0	0	0	0		0
	4		SB	SBT	285	303	305	50	355	20	375		375
	4			SBR	70	107	105	0	105	25	130		130
			TEV		**715**	**816**	**850**	**50**	**900**	**45**	**945**	0	**945**

Project: South Hillsboro Focus Area Plan
Job #: ODOT0000-0737
Subject: ***PM Turning Movement Volumes***
Created: 7/21/2012
Rev. Date: 3/5/2013

	Synchro ID	Intersection	Direction	Movement	2011 Final Balanced Volumes for Synchro - PM Peak	Direction Correctio	2010 UGB						
						2035 Baseline NCHRP 255-Link Unbalanced	2035 Baseline NCHRP 255-Link Unbalanced	No Hi + South Cooper Mtn Volumes	2035 Unbalanced	Vol Balance	2035 Balanced Volumes	Vol Balance - Combined Internal + External	2035 SoHi Network Balanced w/229th
25	49	Kinnaman @ 185th		EBL	80	113	115	0	115	0	115		115
	49		EB	EBT	240	280	280	0	280	0	280		280
	49			EBR	85	161	160	0	160	0	160		160
	49			WBL	65	106	105	0	105	0	105		105
	49		WB	WBT	255	244	255	0	255	0	255		255
	49			WBR	135	164	165	0	165	0	165		165
	49			NBL	60	78	80	0	80	0	80		80
	49		NB	NBT	360	591	590	0	590	0	590		590
	49			NBR	35	47	45	0	45	0	45		45
	49			SBL	205	281	280	0	280	0	280		280
	49		SB	SBT	500	1,114	1,115	150	1,265	(315)	950		950
	49			SBR	45	59	60	0	60	0	60		60
			TEV		**2,065**	**3,239**	**3,250**	**150**	**3,400**	**(315)**	**3,085**	0	**3,085**
34	235	Farmington @ 198th		EBL	75	142	140	0	140	0	140		140
	235		EB	EBT	440	739	740	0	740	(80)	660		660
	235			EBR	0	0	5	0	5	0	5		5
	235			WBL	0	0	5	0	5	0	5		5
	235		WB	WBT	550	868	870	0	870	0	870		870
	235			WBR	130	317	315	0	315	50	365		365
	235			NBL	0	0	5	0	5	0	5		5
	235		NB	NBT	0	0	5	0	5	0	5		5
	235			NBR	0	0	5	0	5	0	5		5
	235			SBL	160	211	210	0	210	0	210		210
	235		SB	SBT	0	0	5	0	5	0	5		5
	235			SBR	85	82	85	50	135	(25)	110		110
			TEV		**1,440**	**2,360**	**2,390**	**50**	**2,440**	**(55)**	**2,385**	0	**2,385**
35	237	Farmington Rd @ 185th		EBL	100	187	185	0	185	(30)	155		155
	237		EB	EBT	405	647	645	0	645	(40)	605		605
	237			EBR	150	190	190	0	190	(20)	170		170
	237			WBL	110	150	150	0	150	0	150		150
	237		WB	WBT	650	1,200	1,200	0	1,200	(200)	1,000		1,000
	237			WBR	55	111	110	0	110	0	110		110
	237			NBL	205	229	230	0	230	0	230		230
	237		NB	NBT	245	299	300	0	300	65	365		365
	237			NBR	60	63	65	0	65	0	65		65
	237			SBL	105	226	225	0	225	(45)	180		180
	237		SB	SBT	300	511	510	150	660	35	695		695
	237			SBR	145	334	335	0	335	0	335		335
			TEV		**2,530**	**4,146**	**4,145**	**150**	**4,295**	**(235)**	**4,060**	0	**4,060**
10	51	Cornelius Pass Rd @ Johnson St		EBL	15	77	75	0	75	0	75		75
	51		EB	EBT	15	67	65	0	65	0	65		65
	51			EBR	125	237	235	0	235	(85)	150		150
	51			WBL	115	119	120	0	120	0	120		120
	51		WB	WBT	50	66	65	0	65	0	65		65
	51			WBR	15	42	40	0	40	0	40		40
	51			NBL	85	51	85	0	85	0	85		85
	51		NB	NBT	175	222	220	0	220	0	220		220
	51			NBR	150	166	165	0	165	0	165		165
	51			SBL	35	143	145	0	145	0	145		145
	51		SB	SBT	455	783	785	100	885	(300)	585		585
	51			SBR	20	44	45	0	45	0	45		45
			TEV		**1,255**	**2,017**	**2,045**	**100**	**2,145**	**(385)**	**1,760**	0	**1,760**
19-S	16	198th Ave @ Blanton St (South)		EBL	130	37	130	0	130	0	130		130
	16		EB	EBT	0	0	0	0	0	0	0		0
	16			EBR	150	6	150	0	150	50	200		200
	16			WBL	0	0	0	0	0	0	0		0
	16		WB	WBT	0	0	0	0	0	0	0		0
	16			WBR	0	0	0	0	0	0	0		0
	16			NBL	150	2	150	0	150	0	150		150
	16		NB	NBT	120	236	235	0	235	0	235		235
	16			NBR	0	0	0	0	0	0	0		0
	16			SBL	0	0	0	0	0	0	0		0
	16		SB	SBT	205	375	375	50	425	50	475		475
	16			SBR	285	27	285	0	285	(50)	235		235
			TEV		**1,040**	**683**	**1,325**	**50**	**1,375**	**50**	**1,425**	0	**1,425**
19-N	63	198th Ave @ Blanton St (North)		EBL	0	0	0	0	0	0	0		0
	63		EB	EBT	0	0	0	0	0	0	0		0
	63			EBR	0	0	0	0	0	0	0		0
	63			WBL	100	92	100	0	100	100	200		200
	63		WB	WBT	0	0	0	0	0	0	0		0
	63			WBR	215	215	215	0	215	0	215		215
	63			NBL	0	0	0	0	0	0	0		0
	63		NB	NBT	200	211	210	0	210	80	290		290
	63			NBR	50	72	75	0	75	0	75		75
	63			SBL	135	214	215	0	215	0	215		215
	63		SB	SBT	390	419	420	50	470	40	510		510
	63			SBR	0	0	0	0	0	0	0		0
			TEV		**1,090**	**1,222**	**1,235**	**50**	**1,285**	**220**	**1,505**	0	**1,505**

Project: South Hillsboro Focus Area Plan
Job #: ODOT0000-0737
Subject: ***PM Turning Movement Volumes***
Created: 7/21/2012
Rev. Date: 3/5/2013

	Synchro ID	Intersection	Direction	Movement	2011 Final Balanced Volumes for Synchro - PM Peak	Direction Correctio	2010 UGB						
						2035 Baseline NCHRP 255-Link Unbalanced	2035 Baseline NCHRP 255-Link Unbalanced	No Hi + South Cooper Mtn Volumes	2035 Unbalanced	Vol Balance	2035 Balanced Volumes	Vol Balance - Combined Internal + External	2035 SoHi Network Balanced w/229th
20-S	66	185th Ave @ Blanton (South)		EBL	0	0	0	0	0	0	0		0
	66		EB	EBT	0	0	0	0	0	0	0		0
	66			EBR	0	0	0	0	0	0	0		0
	66			WBL	135	159	160	0	160	0	160		160
	66		WB	WBT	0	0	0	0	0	0	0		0
	66			WBR	150	207	210	0	210	0	210		210
	66			NBL	0	0	0	0	0	0	0		0
	66		NB	NBT	515	777	775	0	775	(35)	740		740
	66			NBR	60	55	60	0	60	0	60		60
	66			SBL	175	224	225	0	225	(50)	175		175
	66		SB	SBT	785	1,419	1,420	150	1,570	(400)	1,170		1,170
	66			SBR	0	0	0	0	0	0	0		0
			TEV		**1,820**	**2,841**	**2,850**	**150**	**3,000**	**(485)**	**2,515**	0	**2,515**
20-N	39	185th Ave @ Blanton (North)		EBL	135	197	175	0	175	20	195		195
	39		EB	EBT	0	0	0	0	0	0	0		0
	39			EBR	110	162	185	0	185	(25)	160		160
	39			WBL	0	0	0	0	0	0	0		0
	39		WB	WBT	0	0	0	0	0	0	0		0
	39			WBR	0	0	0	0	0	0	0		0
	39			NBL	90	83	90	0	90	(5)	85		85
	39		NB	NBT	575	897	920	0	920	(55)	865		865
	39			NBR	0	0	0	0	0	0	0		0
	39			SBL	0	0	0	0	0	0	0		0
	39		SB	SBT	760	1,362	840	150	990	195	1,185		1,185
	39			SBR	265	277	790	0	790	(515)	275		275
			TEV		**1,935**	**2,978**	**3,000**	**150**	**3,150**	**(385)**	**2,765**	0	**2,765**

Project: South Hillsboro Focus Area Plan
Job #: ODOT0000-0737
Subject: **PM Turning Movement Volumes**
Created: 7/21/2012
Rev. Date: 3/5/2013

Table 2: 2035 Link Volume Calculations for the PM Peak Period

Road	From	To	Direction	Volumes 2011	Model 2010	Interpolated Model 2011	Model 2035	2011-2035 Model Comparison: Annual Growth	Total Growth	Volume Difference	2035 Volume Estimates: Difference Volume	Growth Volume	Absolute Difference	Average	Forecast Used	Method Used	Comments
River Road	South of TV Hwy	TV Hwy	NB	400	392	390	348	-0.4%	-10.8%	-42	358	357	0%	357	**357**	Average of Difference and Growth	
	TV Hwy	South of TV Hwy	SB	435	508	517	730	1.7%	42.0%	213	648	617	5%	633	**633**	Average of Difference and Growth	
	TV Hwy	North of TV Hwy	NB	235	160	157	93	-1.7%	-40.2%	-64	171	141	19%	156	**171**	Difference Method	Absolute difference >10% --> Used difference only
	North of TV Hwy	TV Hwy	SB	150	206	208	261	1.1%	25.6%	53	203	188	7%	196	**203**	Difference Method	To be consistent with method used for opposing direction
Minter Bridge@Cypress	South of River Road	River Road	NB	280	284	288	386	1.4%	34.5%	98	378	377	0%	377	**377**	Average of Difference and Growth	
	River Road	South of River Road	SB	360	390	396	549	1.6%	39.1%	153	513	501	2%	507	**507**	Average of Difference and Growth	
	River Road	TV Hwy	NB	500	395	400	515	1.2%	29.2%	115	615	646	5%	631	**631**	Average of Difference and Growth	
	TV Hwy	River Road	SB	505	485	492	651	1.4%	32.9%	159	664	671	1%	668	**668**	Average of Difference and Growth	
	TV Hwy	North of TV Hwy	NB	455	395	396	410	0.2%	3.6%	14	469	472	0%	470	**470**	Average of Difference and Growth	
	North of TV Hwy	TV Hwy	SB	505	609	612	686	0.5%	12.1%	74	579	566	2%	573	**573**	Average of Difference and Growth	
Brookwood Blvd	Witch Hazel	TV Hwy	NB	360	396	399	471	0.8%	18.2%	72	432	425	2%	429	**429**	Average of Difference and Growth	
	TV Hwy	Witch Hazel	SB	445	469	483	813	2.9%	70.4%	330	775	758	2%	767	**767**	Average of Difference and Growth	
	TV Hwy	Frewing	NB	515	558	560	603	0.3%	7.7%	43	558	555	1%	557	**557**	Average of Difference and Growth	
	Frewing	TV Hwy	SB	570	557	565	753	1.4%	33.8%	188	758	763	1%	760	**760**	Average of Difference and Growth	
Century/234th Ave	Alexander	TV Hwy	NB	205	193	199	352	3.3%	79.1%	153	358	367	3%	362	**362**	Average of Difference and Growth	
	TV Hwy	Alexander	SB	240	191	198	355	3.4%	82.4%	157	397	438	10%	418	**418**	Average of Difference and Growth	
	TV Hwy	Johnson	NB	250	411	415	503	0.9%	21.5%	88	338	304	11%	321	**338**	Difference Method	Absolute difference >10% --> Used difference only
	Johnson	TV Hwy	SB	310	279	285	425	2.1%	50.2%	140	450	466	3%	458	**450**	Difference Method	To be consistent with method used for opposing direction
229th/67th	Alexander	TV Hwy	NB	120	232	230	189	-0.7%	-17.8%	-41	79	99	22%	89	**79**	Difference Method	Absolute difference >10% --> Used difference only
	TV Hwy	Alexander	SB	85	399	404	513	1.1%	27.4%	109	194	108	57%	151	**194**	Difference Method	Absolute difference >10% --> Used difference only
	TV Hwy	Johnson	NB	145	33	36	100	8.1%	194.9%	64	209	428	69%	318	**209**	Difference Method	Absolute difference >10% --> Used difference only
	Johnson	TV Hwy	SB	175	148	151	222	2.0%	48.0%	71	246	259	5%	253	**246**	Difference Method	To be consistent with method used for opposing direction
Cornelius Pass	South of TV Hwy	TV Hwy	NB	3	1	1	3	8.0%	192.0%	2	5	9	55%	7	**5**	Difference Method	Absolute difference >10% --> Used difference only
	TV Hwy	South of TV Hwy	SB	3	1	1	3	8.0%	192.0%	2	5	9	55%	7	**5**	Difference Method	Absolute difference >10% --> Used difference only
	TV Hwy	Johnson	NB	410	531	532	562	0.2%	5.6%	30	440	433	2%	436	**436**	Average of Difference and Growth	
	Johnson	TV Hwy	SB	695	651	669	1098	2.7%	65.9%	429	1124	1153	3%	1139	**1139**	Average of Difference and Growth	
	Johnson	North of Johnson	NB	205	438	444	580	1.3%	31.1%	136	341	269	24%	305	**341**	Difference Method	Absolute difference >10% --> Used difference only
	North of Johnson	Johnson	SB	510	630	649	1103	3.0%	72.1%	454	964	878	9%	921	**964**	Difference Method	To be consistent with method used for opposing direction
209th Ave	South of Farmington	Farmington	NB	235	370	367	300	-0.8%	-18.2%	-67	168	192	14%	180	**168**	Difference Method	Absolute difference >10% --> Used difference only
	Farmington	South of Farmington	SB	355	452	460	642	1.7%	40.4%	182	537	498	8%	518	**537**	Difference Method	To be consistent with method used for opposing direction
	Farmington	Rosedale	NB	460	427	429	477	0.5%	11.2%	48	508	512	1%	510	**510**	Average of Difference and Growth	
	Rosedale	Farmington	SB	620	579	591	872	2.0%	48.6%	281	901	921	2%	911	**911**	Average of Difference and Growth	
	Blanton	TV Hwy	NB	445	433	435	489	0.5%	12.4%	54	499	500	0%	500	**500**	Average of Difference and Growth	
	TV Hwy	Blanton	SB	765	580	589	798	1.5%	36.1%	209	974	1041	7%	1008	**1008**	Average of Difference and Growth	
	TV Hwy	Alexander	NB	280	385	387	447	0.6%	15.5%	60	340	323	5%	331	**331**	Average of Difference and Growth	
	Alexander	TV Hwy	SB	280	388	394	532	1.5%	35.6%	138	418	380	10%	399	**399**	Average of Difference and Growth	
198th Ave	Farmington	North of Farmington	NB	205	339	350	604	3.1%	75.0%	254	459	359	25%	409	**459**	Difference Method	Absolute difference >10% --> Used difference only
	North of Farmington	Farmington	SB	245	399	402	463	0.6%	15.4%	61	306	283	8%	295	**306**	Difference Method	To be consistent with method used for opposing direction
	South of Kinnaman (south	Kinnaman (south)	NB	265	170	171	191	0.5%	11.9%	20	285	296	4%	291	**291**	Average of Difference and Growth	
	Kinnaman (south)	South of Kinnaman (south)	SB	305	435	435	439	0.0%	0.9%	4	309	308	0%	308	**308**	Average of Difference and Growth	
	Kinnaman (south)	Kinnaman (north)	NB	315	269	272	345	1.1%	27.1%	73	388	400	3%	394	**394**	Average of Difference and Growth	
	Kinnaman (north)	Kinnaman (south)	SB	465	576	577	602	0.2%	4.3%	25	490	485	1%	488	**488**	Average of Difference and Growth	
	Kinnaman (north)	North of Kinnaman (north)	NB	460	398	397	385	-0.1%	-3.1%	-12	448	446	0%	447	**447**	Average of Difference and Growth	
	North of Kinnaman (north)	Kinnaman (north)	SB	695	654	655	689	0.2%	5.1%	34	729	731	0%	730	**730**	Average of Difference and Growth	
	South of Blanton (south)	Blanton (south)	NB	270	398	397	385	-0.1%	-3.1%	-12	258	262	2%	260	**260**	Average of Difference and Growth	
	Blanton (south)	South of Blanton (south)	SB	355	654	655	689	0.2%	5.1%	34	389	373	4%	381	**381**	Average of Difference and Growth	
	Blanton (south)	Blanton (north)	NB	250	553	554	586	0.2%	5.7%	32	282	264	6%	273	**273**	Average of Difference and Growth	
	Blanton (north)	Blanton (south)	SB	490	651	652	676	0.2%	3.7%	24	514	508	1%	511	**511**	Average of Difference and Growth	
	Blanton (north)	TV Hwy	NB	415	485	485	497	0.1%	2.4%	12	427	425	0%	426	**426**	Average of Difference and Growth	
	TV Hwy	Blanton (north)	SB	525	592	596	688	0.6%	15.6%	92	617	607	2%	612	**612**	Average of Difference and Growth	
	TV Hwy	Alexander	NB	420	427	430	512	0.8%	19.1%	82	502	500	0%	501	**501**	Average of Difference and Growth	
	Alexander	TV Hwy	SB	430	400	406	555	1.6%	37.2%	149	579	590	2%	584	**584**	Average of Difference and Growth	
Farmington Rd	West of 209th	209th	EB	340	371	380	605	2.5%	60.5%	225	565	546	3%	555	**555**	Average of Difference and Growth	
	209th	East of 209th	EB	445	490	500	733	2.0%	47.6%	233	678	657	3%	668	**668**	Average of Difference and Growth	
	East of 209th	209th	WB	485	464	472	664	1.7%	41.4%	192	677	686	1%	681	**681**	Average of Difference and Growth	
	209th	West of 209th	WB	420	416	423	589	1.7%	39.9%	166	586	588	0%	587	**587**	Average of Difference and Growth	
	West of 198th	198th	EB	655	536	546	784	1.9%	44.4%	238	893	946	6%	920	**920**	Average of Difference and Growth	
	198th	East of 198th	EB	600	611	623	900	1.9%	45.4%	277	877	872	1%	875	**875**	Average of Difference and Growth	
	East of 198th	198th	WB	680	645	668	1213	3.5%	84.5%	545	1225	1255	2%	1240	**1240**	Average of Difference and Growth	
	198th	West of 198th	WB	635	630	643	957	2.1%	49.8%	314	949	951	0%	950	**950**	Average of Difference and Growth	
	West of 185th	185th	EB	655	576	590	934	2.5%	59.7%	344	999	1046	5%	1022	**1022**	Average of Difference and Growth	
	185th	East of 185th	EB	570	526	541	891	2.8%	66.6%	350	920	950	3%	935	**935**	Average of Difference and Growth	
	East of 185th	185th	WB	815	702	727	1324	3.5%	85.1%	597	1412	1508	7%	1460	**1460**	Average of Difference and Growth	
	185th	West of 185th	WB	1000	796	824	1500	3.5%	84.9%	676	1676	1849	10%	1762	**1762**	Average of Difference and Growth	

Project: South Hillsboro Focus Area Plan
Job #: ODOT0000-0737
Subject: **PM Turning Movement Volumes**
Created: 7/21/2012
Rev. Date: 3/5/2013

Table 2: 2035 Link Volume Calculations for the PM Peak Period

Road	From	To	Direction	Volumes 2011	Model 2010	Interpolated Model 2011	Model 2035	2011-2035 Model Comparison: Annual Growth	Total Growth	Volume Difference	2035 Volume Estimates: Difference Volume	Growth Volume	Absolute Difference	Average	Forecast Used	Method Used	Comments
185th Ave	South of Farmington	Farmington	NB	510	551	554	637	0.6%	15.0%	83	593	586	1%	589	**589**	Average of Difference and Growth	
	Farmington	South of Farmington	SB	560	607	620	923	2.1%	50.0%	303	863	840	3%	852	**852**	Average of Difference and Growth	
	Farmington	Rosa	NB	400	430	438	642	2.0%	47.3%	204	604	589	2%	596	**596**	Average of Difference and Growth	
	Rosa	Farmington	SB	550	531	552	1063	4.0%	96.2%	511	1061	1079	2%	1070	**1070**	Average of Difference and Growth	
	South of Kinnaman	Kinnaman	NB	455	444	455	708	2.4%	57.1%	253	708	715	1%	712	**712**	Average of Difference and Growth	
	Kinnaman	South of Kinnaman	SB	650	590	619	1315	4.9%	118.0%	696	1346	1417	5%	1381	**1381**	Average of Difference and Growth	
	Kinnaman	North of Kinnaman	NB	575	515	527	804	2.2%	53.9%	277	852	885	4%	869	**869**	Average of Difference and Growth	
	North of Kinnaman	Kinnaman	SB	750	683	710	1369	4.0%	96.4%	659	1409	1473	4%	1441	**1441**	Average of Difference and Growth	
	South of Blanton (south)	Blanton (south)	NB	575	515	527	804	2.2%	53.9%	277	852	885	4%	869	**852**	Difference Method	To be consistent with method used for opposing direction
	Blanton (south)	South of Blanton (south)	SB	920	683	710	1369	4.0%	96.4%	659	1579	1807	13%	1693	**1579**	Difference Method	Absolute difference >10% --> Used difference only
	Blanton (south)	North of Blanton (south)	NB	665	565	578	897	2.4%	56.4%	319	984	1040	6%	1012	**984**	Difference Method	To be consistent with method used for opposing direction
	North of Blanton (south)	Blanton (south)	SB	960	774	801	1455	3.5%	84.5%	654	1614	1771	9%	1692	**1692**	Average of Difference and Growth	
	South of Blanton (north)	Blanton (north)	NB	665	565	578	897	2.4%	56.4%	319	984	1040	6%	1012	**984**	Difference Method	
	Blanton (north)	South of Blanton (north)	SB	870	774	801	1455	3.5%	84.5%	654	1524	1605	5%	1564	**1524**	Difference Method	
	Blanton (north)	N of Blanton (north)	NB	710	733	749	1140	2.2%	53.3%	391	1101	1088	1%	1095	**1095**	Average of Difference and Growth	
	N of Blanton (north)	Blanton (north)	SB	1025	969	994	1599	2.6%	62.4%	605	1630	1665	2%	1647	**1647**	Average of Difference and Growth	
	S of TV Hwy	TV Hwy	NB	705	733	749	1140	2.2%	53.3%	391	1096	1081	1%	1088	**1088**	Average of Difference and Growth	
	TV Hwy	S of TV Hwy	SB	925	969	994	1599	2.6%	62.4%	605	1530	1502	2%	1516	**1516**	Average of Difference and Growth	
	TV Hwy	Alexander	NB	735	1094	1103	1314	0.8%	19.3%	211	946	877	8%	912	**912**	Average of Difference and Growth	
	Alexander	TV Hwy	SB	915	1264	1277	1586	1.0%	24.5%	309	1224	1139	7%	1181	**1181**	Average of Difference and Growth	
Kinnaman (south)	West of 198th	198th	EB	95	103	105	158	2.1%	51.3%	53	148	144	3%	146	**146**	Average of Difference and Growth	
	198th	West of 198th	WB	95	144	145	167	0.6%	15.3%	22	117	110	7%	113	**113**	Average of Difference and Growth	
Kinnaman (north)	East of 198th	198th	WB	190	236	236	248	0.2%	4.9%	12	202	199	1%	200	**202**	Difference Method	To be consistent with method used for opposing direction
	198th	East of 198th	EB	275	185	189	295	2.4%	57.1%	106	381	432	13%	406	**381**	Difference Method	Absolute difference >10% --> Used difference only
Kinnaman	West of 185th	185th	EB	405	279	285	430	2.2%	52.0%	145	550	615	11%	583	**550**	Difference Method	Absolute difference >10% --> Used difference only
	185th	West of 185th	WB	360	349	350	371	0.3%	6.1%	21	381	382	0%	381	**381**	Difference Method	To be consistent with method used for opposing direction
	185th	East of 185th	EB	480	392	397	512	1.2%	29.4%	115	595	621	4%	608	**608**	Average of Difference and Growth	
	East of 185th	185th	WB	455	439	441	496	0.5%	12.5%	55	510	512	0%	511	**511**	Average of Difference and Growth	
Johnson St	West of Cornelius pass	Cornelius Pass	EB	155	114	123	348	8.2%	197.1%	225	380	460	19%	420	**380**	Difference Method	Absolute difference >10% --> Used difference only
	Cornelius Pass	West of Cornelius pass	WB	155	173	173	179	0.1%	3.3%	6	161	160	0%	160	**161**	Difference Method	To be consistent with method used for opposing direction
	Cornelius Pass	East of Cornelius Pass	EB	200	229	237	425	3.4%	82.2%	188	388	364	6%	376	**376**	Average of Difference and Growth	
	East of Cornelius Pass	Cornelius Pass	WB	180	216	218	268	1.0%	23.1%	50	230	222	4%	226	**226**	Average of Difference and Growth	
TV Highway	River Road	Cypress/Minter Br	EB	1220	1053	1059	1215	0.6%	14.8%	156	1376	1400	2%	1388	**1388**	Average of Difference and Growth	
	Cypress/Minter Br	River Road	WB	1105	932	931	914	-0.1%	-1.9%	-17	1088	1085	0%	1086	**1086**	Average of Difference and Growth	
	Cypress/Minter Br	E of Cypress/Minter Br	EB	1220	1379	1385	1523	0.4%	10.0%	138	1358	1342	1%	1350	**1350**	Average of Difference and Growth	
	E of Cypress/Minter Br	Cypress/Minter Br	WB	1060	1134	1132	1082	-0.2%	-4.4%	-50	1010	1013	0%	1012	**1012**	Average of Difference and Growth	
	W of Brookwood Blvd	Brookwood Blvd	EB	1405	1379	1385	1523	0.4%	10.0%	138	1543	1546	0%	1545	**1545**	Average of Difference and Growth	
	Brookwood Blvd	W of Brookwood Blvd	WB	1340	1134	1132	1082	-0.2%	-4.4%	-50	1290	1281	1%	1286	**1286**	Average of Difference and Growth	
	Brookwood Blvd	E of Brookwood	EB	1625	1504	1508	1612	0.3%	6.9%	104	1729	1737	0%	1733	**1733**	Average of Difference and Growth	
	E of Brookwood	Brookwood Blvd	WB	1590	1334	1335	1363	0.1%	2.1%	28	1618	1623	0%	1621	**1621**	Average of Difference and Growth	
	W of Century/234th	Century/234th	EB	1590	1425	1426	1459	0.1%	2.3%	33	1623	1626	0%	1625	**1625**	Average of Difference and Growth	
	Century/234th	W of Century/234th	WB	1540	1228	1226	1181	-0.2%	-3.7%	-45	1495	1483	1%	1489	**1489**	Average of Difference and Growth	
	Century/234th	E of Century/234th	EB	1570	1445	1450	1573	0.4%	8.5%	123	1693	1704	1%	1698	**1698**	Average of Difference and Growth	
	E of Century/234th	Century/234th	WB	1495	1378	1378	1376	0.0%	-0.1%	-2	1493	1493	0%	1493	**1493**	Average of Difference and Growth	
	W of 229th/67th	229th/67th	EB	1475	1445	1450	1573	0.4%	8.5%	123	1598	1600	0%	1599	**1599**	Average of Difference and Growth	
	229th/67th	W of 229th/67th	WB	1475	1378	1378	1376	0.0%	-0.1%	-2	1473	1473	0%	1473	**1473**	Average of Difference and Growth	
	229th/67th	E of 229th/67th	EB	1610	1458	1459	1483	0.1%	1.6%	24	1634	1637	0%	1635	**1635**	Average of Difference and Growth	
	E of 229th/67th	229th/67th	WB	1545	1444	1446	1490	0.1%	3.1%	44	1589	1592	0%	1591	**1591**	Average of Difference and Growth	
	W of Corn Pass	Cornelius Pass	EB	1501	1458	1459	1483	0.1%	1.6%	24	1525	1526	0%	1525	**1525**	Average of Difference and Growth	
	Cornelius Pass	W of Corn Pass	WB	1636	1444	1446	1490	0.1%	3.1%	44	1680	1686	0%	1683	**1683**	Average of Difference and Growth	
	Cornelius Pass	E fo Cornelius pass	EB	1851	1715	1733	2170	1.1%	25.5%	437	2288	2322	2%	2305	**2305**	Average of Difference and Growth	
	E fo Cornelius pass	Cornelius Pass	WB	1706	1581	1583	1640	0.1%	3.6%	57	1763	1767	0%	1765	**1765**	Average of Difference and Growth	
	W of 209th	209th	EB	1825	1715	1733	2170	1.1%	25.5%	437	2262	2290	1%	2276	**2276**	Average of Difference and Growth	
	209th	W of 209th	WB	1780	1581	1583	1640	0.1%	3.6%	57	1837	1844	0%	1840	**1840**	Average of Difference and Growth	
	209th	E of 209th	EB	1470	1470	1483	1796	0.9%	21.3%	313	1783	1783	0%	1783	**1783**	Average of Difference and Growth	
	E of 209th	209th	WB	1745	1479	1479	1490	0.0%	0.7%	11	1756	1757	0%	1757	**1757**	Average of Difference and Growth	
	W of 198th	198th	EB	1515	1470	1483	1796	0.9%	21.3%	313	1828	1838	1%	1833	**1833**	Average of Difference and Growth	
	198th	W of 198th	WB	1645	1479	1479	1490	0.0%	0.7%	11	1656	1657	0%	1656	**1656**	Average of Difference and Growth	
	198th	E of 198th	EB	1500	1563	1573	1817	0.7%	15.6%	244	1744	1734	1%	1739	**1739**	Average of Difference and Growth	
	E of 198th	198th	WB	1730	1706	1704	1658	-0.1%	-2.7%	-46	1684	1683	0%	1684	**1684**	Average of Difference and Growth	
	W of 185th	185th	EB	1500	1562	1572	1817	0.7%	15.7%	245	1745	1735	1%	1740	**1740**	Average of Difference and Growth	
	185th	W of 185th	WB	1800	1708	1706	1658	-0.1%	-2.8%	-48	1752	1749	0%	1751	**1751**	Average of Difference and Growth	
	185th	E of 185th	EB	1445	1726	1733	1892	0.4%	9.2%	159	1604	1578	2%	1591	**1591**	Average of Difference and Growth	
	E of 185th	185th	WB	1785	1918	1914	1826	-0.2%	-4.6%	-88	1697	1703	0%	1700	**1700**	Average of Difference and Growth	

Project: South Hillsboro Focus Area Plan
Job #: ODOT0000-0737
Subject: **PM Turning Movement Volumes**
Created: 7/21/2012
Rev. Date: 3/5/2013

Table 2: 2035 Link Volume Calculations for the PM Peak Period

Road	From	To	Direction	Volumes 2011	Model 2010	Interpolated Model 2011	Model 2035	2011-2035 Model Comparison: Annual Growth	Total Growth	Volume Difference	2035 Volume Estimates: Difference Volume	Growth Volume	Absolute Difference	Average	Forecast Used	Method Used	Comments
River Road	W of Minter Br	Minter Br	EB	530	440	452	736	2.7%	64.6%	284	814	872	7%	843	**843**	Average of Difference and Growth	
	Minter Br	W of Minter Br	WB	410	410	411	447	0.4%	8.7%	36	446	446	0%	446	**446**	Average of Difference and Growth	
	Minter Br	E fo Minter Br	EB	635	368	378	607	2.6%	62.3%	229	864	1031	18%	948	**864**	Difference Method	Absolute difference >10% --> Used difference only
	E fo Minter Br	Minter Br	WB	535	354	354	346	-0.1%	-2.2%	-8	527	523	1%	525	**527**	Difference Method	To be consistent with method used for opposing direction
Blanton (south)	209th	198th	EB	280	280	270	38	-3.5%	-83.0%	-232	48	48	0%	48	**48**	Average of Difference and Growth	Road already present although not in 2010 model
	198th	209th	WB	435	435	418	12	-3.9%	-93.4%	-406	29	29	0%	29	**29**	Average of Difference and Growth	
	185th	E of 185th	EB	235	130	132	176	1.4%	34.0%	44	279	315	12%	297	**279**	Difference Method	Absolute difference >10% --> Used difference only
	E of 185th	185th	WB	285	88	92	183	4.3%	103.6%	91	376	580	43%	478	**376**	Difference Method	Absolute difference >10% --> Used difference only
Blanton (north)	198th	E of 198th	EB	185	156	160	252	2.5%	59.1%	92	277	294	6%	286	**286**	Average of Difference and Growth	
	E of 198th	198th	WB	315	165	164	152	-0.3%	-7.6%	-12	303	291	4%	297	**297**	Average of Difference and Growth	
	W of 185th	185th	EB	245	154	159	275	3.1%	75.4%	116	361	430	17%	395	**361**	Difference Method	Absolute difference >10% --> Used difference only
	185th	W of 185th	WB	355	184	184	189	0.1%	2.6%	5	360	364	1%	362	**360**	Difference Method	To be consistent with method used for opposing direction

Intersection does not currently exist

Greater than 10% difference between difference and growth methods

Insert data into cells with blue font : HEADER INFO, BASE YEAR TURN MOVEMENTS, FUTURE YEAR LINK VOLUMES

OUTPUT DATA IS IN BOLD PRINT.

INTERSECTION :	TV Hwy @ Cypress/Minter Bridge		
SCENARIO :	2035 with 2012 UGB Buildout - Without South Hillsboro		
PEAK HOUR :	PM		
BASE YEAR :	2011	EAST-WEST ROAD:	TV Hwy
FUTURE YEAR :	2035	NORTH-SOUTH ROAD:	Cypress/Minter Bridge

	PEAK HOUR TURNING MOVEMENTS											
	NORTHBOUND			SOUTHBOUND			EASTBOUND			WESTBOUND		
YEAR	Left	Thru	Right	Left	Thru	Right	Left	Thru	Right	Left	Thru	Right
BASE YEAR	135	245	120	115	265	125	120	985	115	125	845	90
OUTPUT FUTURE	**184**	**284**	**158**	**107**	**340**	**121**	**117**	**1,086**	**175**	**153**	**781**	**70**

	PEAK HOUR DIRECTIONAL LINK VOLUMES									
	SOUTHLEG		NORTHLEG		WESTLEG		EASTLEG		ALL LEGS	
YEAR	In	Out	In	Out	In	Out	In	Out	In	Out
BASE YEAR	500	505	505	455	1,220	1,105	1,060	1,220	3,285	3,285
OUTPUT FUTURE	**626**	**668**	**568**	**470**	**1,377**	**1,086**	**1,004**	**1,350**	3,575	3,575
INPUT FUTURE	631	668	573	470	1,388	1,086	1,012	1,350	3,603	3,575
									-28.15	

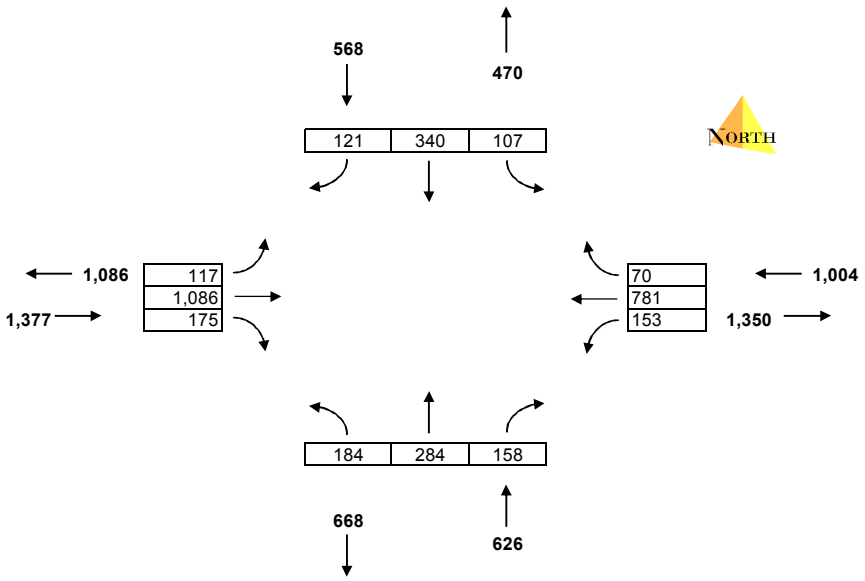

* Turn Calculation Output from NCHRP 255

Insert data into cells with blue font : HEADER INFO, BASE YEAR TURN MOVEMENTS, FUTURE YEAR LINK VOLUMES

OUTPUT DATA IS IN BOLD PRINT.

INTERSECTION :	TV Hwy @ Brookwood		
SCENARIO :	2035 with 2012 UGB Buildout - Without South Hillsboro		
PEAK HOUR :	PM		
BASE YEAR :	2011	EAST-WEST ROAD:	TV Hwy
FUTURE YEAR :	2035	NORTH-SOUTH ROAD:	Brookwood

	PEAK HOUR TURNING MOVEMENTS											
	NORTHBOUND			SOUTHBOUND			EASTBOUND			WESTBOUND		
YEAR	Left	Thru	Right	Left	Thru	Right	Left	Thru	Right	Left	Thru	Right
BASE YEAR	45	165	150	230	230	110	140	1,245	20	195	1,185	210
OUTPUT FUTURE	**56**	**201**	**170**	**225**	**416**	**117**	**161**	**1,338**	**40**	**311**	**1,112**	**194**

	PEAK HOUR DIRECTIONAL LINK VOLUMES									
	SOUTHLEG		NORTHLEG		WESTLEG		EASTLEG		ALL LEGS	
YEAR	In	Out	In	Out	In	Out	In	Out	In	Out
BASE YEAR	360	445	570	515	1,405	1,340	1,590	1,625	3,925	3,925
OUTPUT FUTURE	**427**	**767**	**758**	**557**	**1,539**	**1,286**	**1,617**	**1,733**	4,342	4,342
INPUT FUTURE	429	767	760	557	1,545	1,286	1,621	1,733	4,354	4,342
									-12.42	

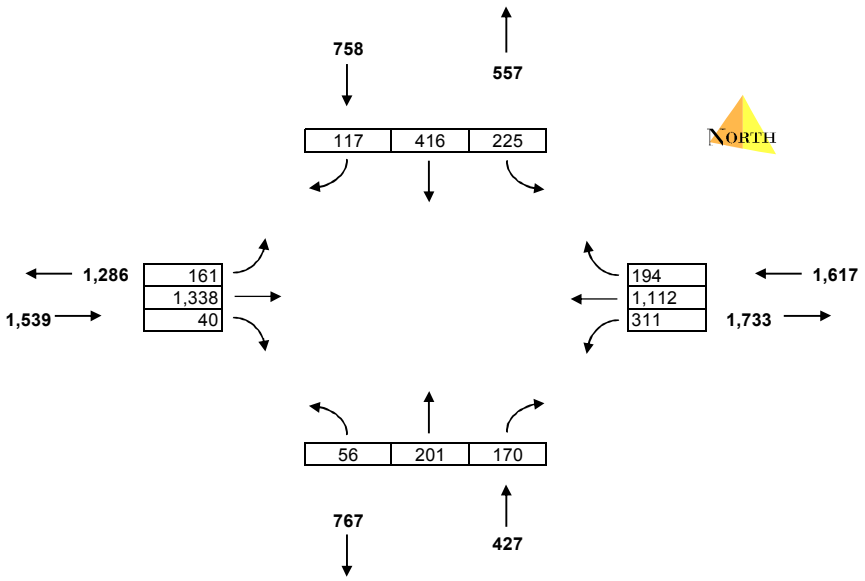

* Turn Calculation Output from NCHRP 255

Insert data into cells with blue font : HEADER INFO, BASE YEAR TURN MOVEMENTS, FUTURE YEAR LINK VOLUMES

OUTPUT DATA IS IN BOLD PRINT.

INTERSECTION :	TV Hwy @ Century Dr/234th		
SCENARIO :	2035 with 2012 UGB Buildout - Without South Hillsboro		
PEAK HOUR :	PM		
BASE YEAR :	2011	EAST-WEST ROAD:	TV Hwy
FUTURE YEAR :	2035	NORTH-SOUTH ROAD:	Century Drve/234th

	PEAK HOUR TURNING MOVEMENTS											
	NORTHBOUND			SOUTHBOUND			EASTBOUND			WESTBOUND		
YEAR	Left	Thru	Right	Left	Thru	Right	Left	Thru	Right	Left	Thru	Right
BASE YEAR	50	60	95	85	80	145	120	1,390	80	80	1,345	70
OUTPUT FUTURE	**69**	**118**	**177**	**126**	**165**	**160**	**127**	**1,395**	**111**	**141**	**1,261**	**94**

	PEAK HOUR DIRECTIONAL LINK VOLUMES									
	SOUTHLEG		NORTHLEG		WESTLEG		EASTLEG		ALL LEGS	
YEAR	In	Out	In	Out	In	Out	In	Out	In	Out
BASE YEAR	205	240	310	250	1,590	1,540	1,495	1,570	3,600	3,600
OUTPUT FUTURE	**364**	**418**	**451**	**338**	**1,633**	**1,489**	**1,495**	**1,698**	3,943	3,943
INPUT FUTURE	362	418	450	338	1,625	1,489	1,493	1,698	3,930	3,943
									13.22	

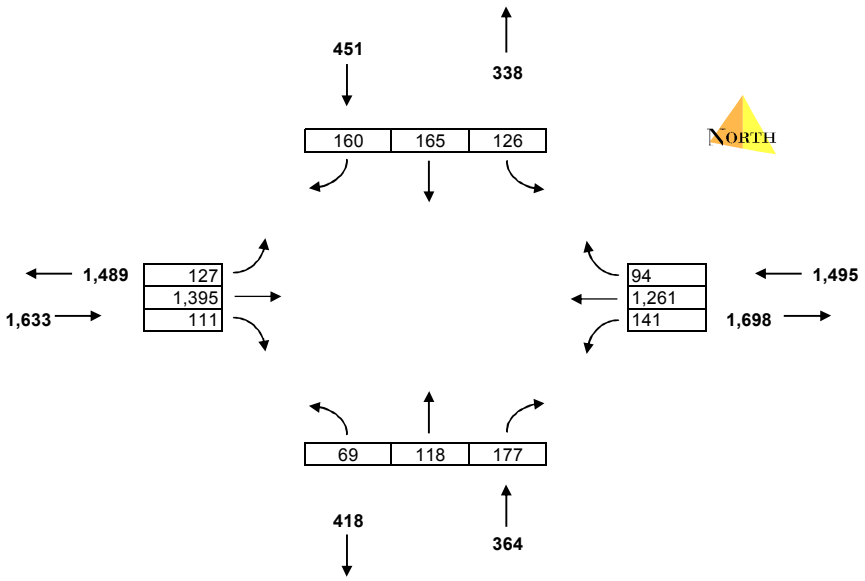

* Turn Calculation Output from NCHRP 255

Insert data into cells with blue font : HEADER INFO, BASE YEAR TURN MOVEMENTS, FUTURE YEAR LINK VOLUMES

OUTPUT DATA IS IN BOLD PRINT.

INTERSECTION :	TV Hwy @ Century Dr/229th		
SCENARIO :	2035 with 2012 UGB Buildout - Without South Hillsboro		
PEAK HOUR :	PM		
BASE YEAR :	2011	EAST-WEST ROAD:	TV Hwy
FUTURE YEAR :	2035	NORTH-SOUTH ROAD:	SW 67th/229th

	PEAK HOUR TURNING MOVEMENTS											
	NORTHBOUND			SOUTHBOUND			EASTBOUND			WESTBOUND		
YEAR	Left	Thru	Right	Left	Thru	Right	Left	Thru	Right	Left	Thru	Right
BASE YEAR	20	40	60	115	35	25	20	1,435	20	30	1,430	85
OUTPUT FUTURE	**13**	**38**	**27**	**119**	**90**	**36**	**44**	**1,489**	**52**	**53**	**1,424**	**127**

	PEAK HOUR DIRECTIONAL LINK VOLUMES									
	SOUTHLEG		NORTHLEG		WESTLEG		EASTLEG		ALL LEGS	
YEAR	In	Out	In	Out	In	Out	In	Out	In	Out
BASE YEAR	120	85	175	145	1,475	1,475	1,545	1,610	3,315	3,315
OUTPUT FUTURE	**79**	**194**	**245**	**209**	**1,584**	**1,473**	**1,604**	**1,635**	3,512	3,512
INPUT FUTURE	79	194	246	209	1,599	1,473	1,591	1,635	3,515	3,512
									-2.596	

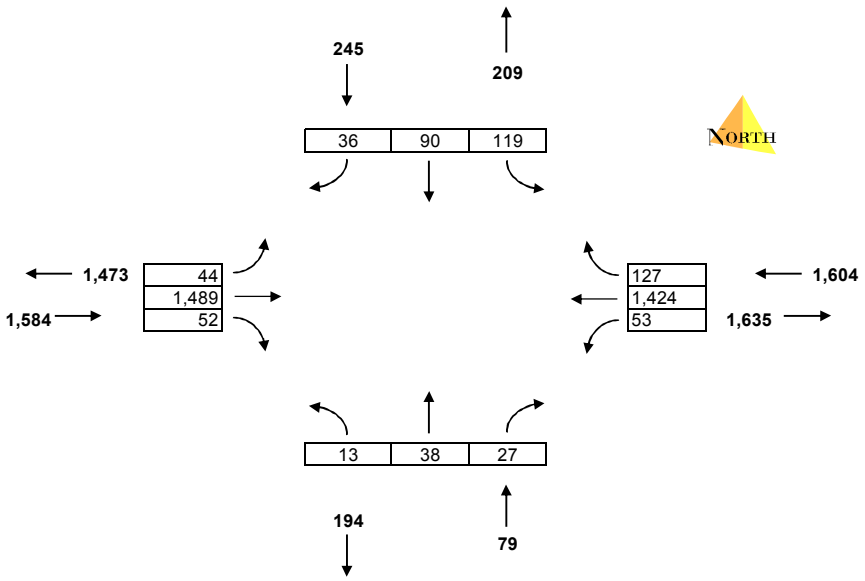

* Turn Calculation Output from NCHRP 255

Insert data into cells with blue font : HEADER INFO, BASE YEAR TURN MOVEMENTS, FUTURE YEAR LINK VOLUMES

OUTPUT DATA IS IN BOLD PRINT.

INTERSECTION :	TV Hwy @ Cornelius Pass		
SCENARIO :	2035 with 2012 UGB Buildout - Without South Hillsboro		
PEAK HOUR :	PM		
BASE YEAR :	2011	EAST-WEST ROAD:	TV Hwy
FUTURE YEAR :	2035	NORTH-SOUTH ROAD:	Cornelius Pass

	PEAK HOUR TURNING MOVEMENTS											
	NORTHBOUND			SOUTHBOUND			EASTBOUND			WESTBOUND		
YEAR	Left	Thru	Right	Left	Thru	Right	Left	Thru	Right	Left	Thru	Right
BASE YEAR	1	1	1	505	1	185	155	1,345	1	1	1,450	255
OUTPUT FUTURE	**1**	**2**	**2**	**908**	**2**	**229**	**131**	**1,395**	**1**	**2**	**1,453**	**303**

	PEAK HOUR DIRECTIONAL LINK VOLUMES									
	SOUTHLEG		NORTHLEG		WESTLEG		EASTLEG		ALL LEGS	
YEAR	In	Out	In	Out	In	Out	In	Out	In	Out
BASE YEAR	3	3	691	411	1,501	1,636	1,706	1,851	3,901	3,901
OUTPUT FUTURE	**5**	**5**	**1,139**	**436**	**1,527**	**1,683**	**1,758**	**2,305**	4,430	4,430
INPUT FUTURE	5	5	1,139	436	1,525	1,683	1,765	2,305	4,434	4,430
									-4.27	

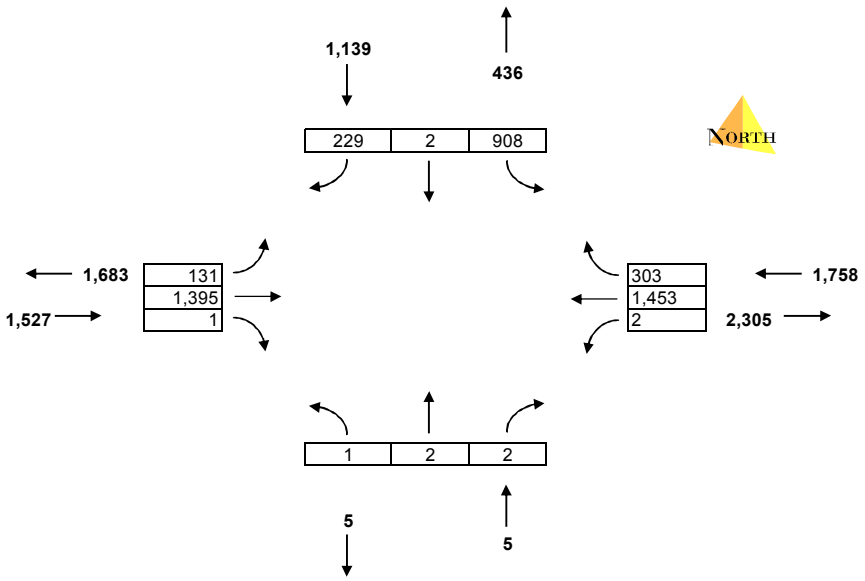

* Turn Calculation Output from NCHRP 255

Insert data into cells with blue font : HEADER INFO, BASE YEAR TURN MOVEMENTS, FUTURE YEAR LINK VOLUMES

OUTPUT DATA IS IN BOLD PRINT.

INTERSECTION :	TV Hwy @ 209th Av e		
SCENARIO :	2035 with 2012 UGB Buildout - Without South Hillsboro		
PEAK HOUR :	PM		
BASE YEAR :	2011	EAST-WEST ROAD:	TV Hwy
FUTURE YEAR :	2035	NORTH-SOUTH ROAD:	209

	PEAK HOUR TURNING MOVEMENTS											
	NORTHBOUND			SOUTHBOUND			EASTBOUND			WESTBOUND		
YEAR	Left	Thru	Right	Left	Thru	Right	Left	Thru	Right	Left	Thru	Right
BASE YEAR	170	190	85	30	185	65	30	1,355	440	140	1,545	60
OUTPUT FUTURE	**189**	**225**	**88**	**40**	**270**	**92**	**42**	**1,655**	**592**	**145**	**1,559**	**64**

	PEAK HOUR DIRECTIONAL LINK VOLUMES									
	SOUTHLEG		NORTHLEG		WESTLEG		EASTLEG		ALL LEGS	
YEAR	In	Out	In	Out	In	Out	In	Out	In	Out
BASE YEAR	445	765	280	280	1,825	1,780	1,745	1,470	4,295	4,295
OUTPUT FUTURE	**503**	**1,008**	**401**	**331**	**2,289**	**1,840**	**1,769**	**1,783**	4,962	4,962
INPUT FUTURE	500	1,008	399	331	2,276	1,840	1,757	1,783	4,931	4,962

31.4

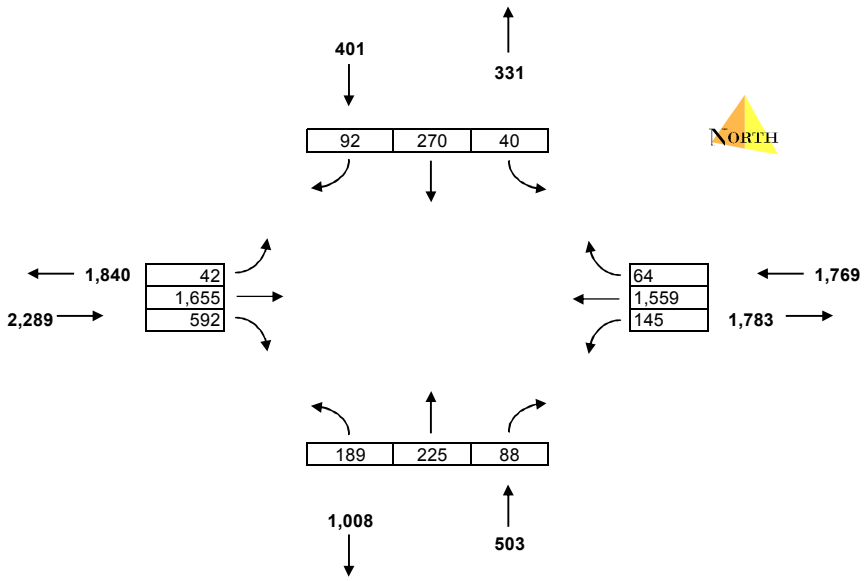

* Turn Calculation Output from NCHRP 255

Insert data into cells with blue font : HEADER INFO, BASE YEAR TURN MOVEMENTS, FUTURE YEAR LINK VOLUMES

OUTPUT DATA IS IN BOLD PRINT.

INTERSECTION :	TV Hwy @ 198th		
SCENARIO :	2035 with 2012 UGB Buildout - Without South Hillsboro		
PEAK HOUR :	PM		
BASE YEAR :	2011	EAST-WEST ROAD:	TV Hwy
FUTURE YEAR :	2035	NORTH-SOUTH ROAD:	198

	PEAK HOUR TURNING MOVEMENTS											
	NORTHBOUND			SOUTHBOUND			EASTBOUND			WESTBOUND		
YEAR	Left	Thru	Right	Left	Thru	Right	Left	Thru	Right	Left	Thru	Right
BASE YEAR	255	205	220	140	250	40	75	1,140	300	240	1,350	140
OUTPUT FUTURE	**166**	**161**	**98**	**226**	**261**	**94**	**165**	**1,415**	**241**	**110**	**1,396**	**175**

	PEAK HOUR DIRECTIONAL LINK VOLUMES									
	SOUTHLEG		NORTHLEG		WESTLEG		EASTLEG		ALL LEGS	
YEAR	In	Out	In	Out	In	Out	In	Out	In	Out
BASE YEAR	680	790	430	420	1,515	1,645	1,730	1,500	4,355	4,355
OUTPUT FUTURE	**424**	**612**	**581**	**501**	**1,821**	**1,656**	**1,681**	**1,739**	4,508	4,508
INPUT FUTURE	426	612	584	501	1,833	1,656	1,684	1,739	4,526	4,508
									-18.46	

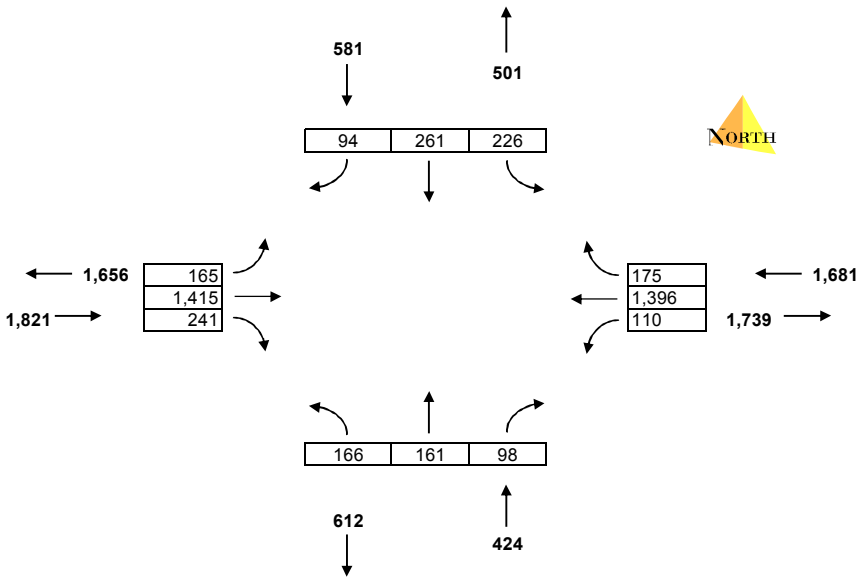

* Turn Calculation Output from NCHRP 255

Insert data into cells with blue font : HEADER INFO, BASE YEAR TURN MOVEMENTS, FUTURE YEAR LINK VOLUMES

OUTPUT DATA IS IN BOLD PRINT.

INTERSECTION :	TV Hwy @ 185th Ave		
SCENARIO :	2035 with 2012 UGB Buildout - Without South Hillsboro		
PEAK HOUR :	PM		
BASE YEAR :	2011	EAST-WEST ROAD:	TV Hwy
FUTURE YEAR :	2035	NORTH-SOUTH ROAD:	185

	PEAK HOUR TURNING MOVEMENTS											
	NORTHBOUND			SOUTHBOUND			EASTBOUND			WESTBOUND		
YEAR	Left	Thru	Right	Left	Thru	Right	Left	Thru	Right	Left	Thru	Right
BASE YEAR	190	415	100	220	535	160	180	1,125	195	195	1,450	140
OUTPUT FUTURE	**310**	**622**	**167**	**203**	**847**	**144**	**175**	**1,221**	**363**	**306**	**1,296**	**115**

	PEAK HOUR DIRECTIONAL LINK VOLUMES									
	SOUTHLEG		NORTHLEG		WESTLEG		EASTLEG		ALL LEGS	
YEAR	In	Out	In	Out	In	Out	In	Out	In	Out
BASE YEAR	705	925	915	735	1,500	1,800	1,785	1,445	4,905	4,905
OUTPUT FUTURE	**1,100**	**1,516**	**1,194**	**912**	**1,759**	**1,751**	**1,717**	**1,591**	5,770	5,770
INPUT FUTURE	1,088	1,516	1,181	912	1,740	1,751	1,700	1,591	5,709	5,770
									60.32	

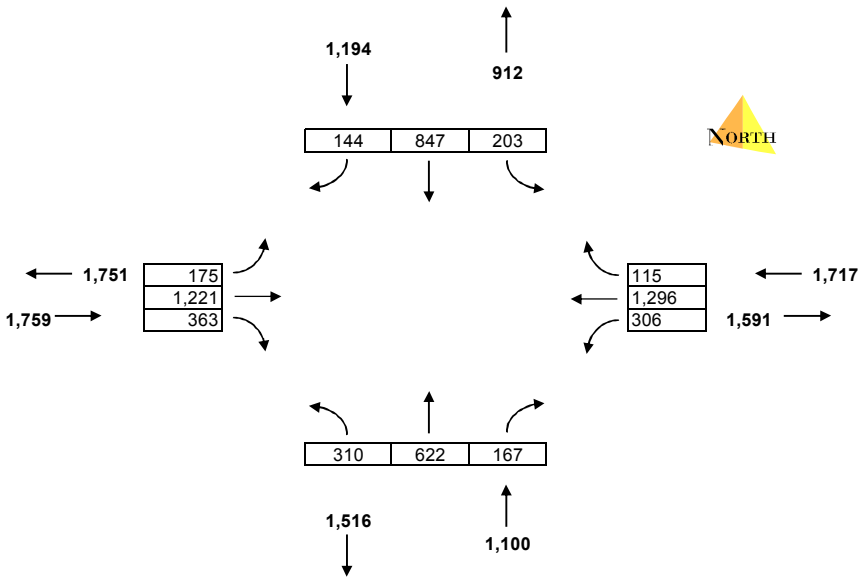

* Turn Calculation Output from NCHRP 255

Insert data into cells with blue font : HEADER INFO, BASE YEAR TURN MOVEMENTS, FUTURE YEAR LINK VOLUMES

OUTPUT DATA IS IN BOLD PRINT.

INTERSECTION :	River Rd @ Minter Bridge		
SCENARIO :	2035 with 2012 UGB Buildout - Without South Hillsboro		
PEAK HOUR :	PM		
BASE YEAR :	2011	EAST-WEST ROAD:	River Rd
FUTURE YEAR :	2035	NORTH-SOUTH ROAD:	Minter Br

	PEAK HOUR TURNING MOVEMENTS											
	NORTHBOUND			SOUTHBOUND			EASTBOUND			WESTBOUND		
YEAR	Left	Thru	Right	Left	Thru	Right	Left	Thru	Right	Left	Thru	Right
BASE YEAR	50	195	35	220	220	50	60	380	90	50	310	175
OUTPUT FUTURE	**62**	**288**	**32**	**275**	**315**	**86**	**144**	**558**	**152**	**40**	**297**	**198**

	PEAK HOUR DIRECTIONAL LINK VOLUMES									
	SOUTHLEG		NORTHLEG		WESTLEG		EASTLEG		ALL LEGS	
YEAR	In	Out	In	Out	In	Out	In	Out	In	Out
BASE YEAR	280	360	490	430	530	410	535	635	1,835	1,835
OUTPUT FUTURE	**382**	**507**	**676**	**631**	**854**	**446**	**535**	**864**	2,447	2,447
INPUT FUTURE	377	507	668	631	843	446	527	864	2,415	2,447
									-31.82	

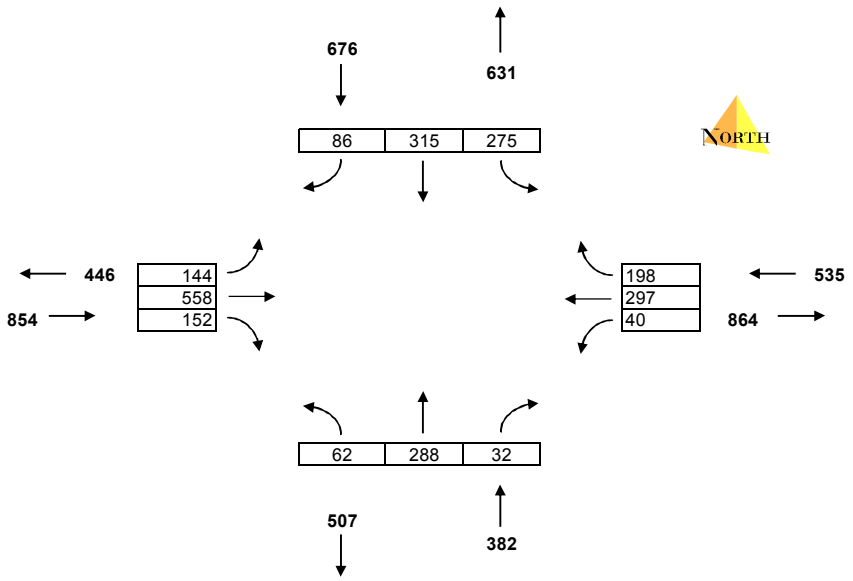

* Turn Calculation Output from NCHRP 255

Insert data into cells with blue font : HEADER INFO, BASE YEAR TURN MOVEMENTS, FUTURE YEAR LINK VOLUMES

OUTPUT DATA IS IN BOLD PRINT.

INTERSECTION :	Farmington @ 209th		
SCENARIO :	2035 with 2012 UGB Buildout - Without South Hillsboro		
PEAK HOUR :	PM		
BASE YEAR :	2011	EAST-WEST ROAD:	Farmington
FUTURE YEAR :	2035	NORTH-SOUTH ROAD:	209

	PEAK HOUR TURNING MOVEMENTS											
	NORTHBOUND			SOUTHBOUND			EASTBOUND			WESTBOUND		
YEAR	Left	Thru	Right	Left	Thru	Right	Left	Thru	Right	Left	Thru	Right
BASE YEAR	5	185	45	185	285	150	105	215	20	50	265	170
OUTPUT FUTURE	**4**	**128**	**35**	**271**	**427**	**208**	**156**	**361**	**34**	**76**	**375**	**226**

	PEAK HOUR DIRECTIONAL LINK VOLUMES									
	SOUTHLEG		NORTHLEG		WESTLEG		EASTLEG		ALL LEGS	
YEAR	In	Out	In	Out	In	Out	In	Out	In	Out
BASE YEAR	235	355	620	460	340	420	485	445	1,680	1,680
OUTPUT FUTURE	**167**	**537**	**906**	**510**	**552**	**587**	**677**	**668**	2,302	2,302
INPUT FUTURE	168	537	911	510	555	587	681	668	2,316	2,302
									-13.94	

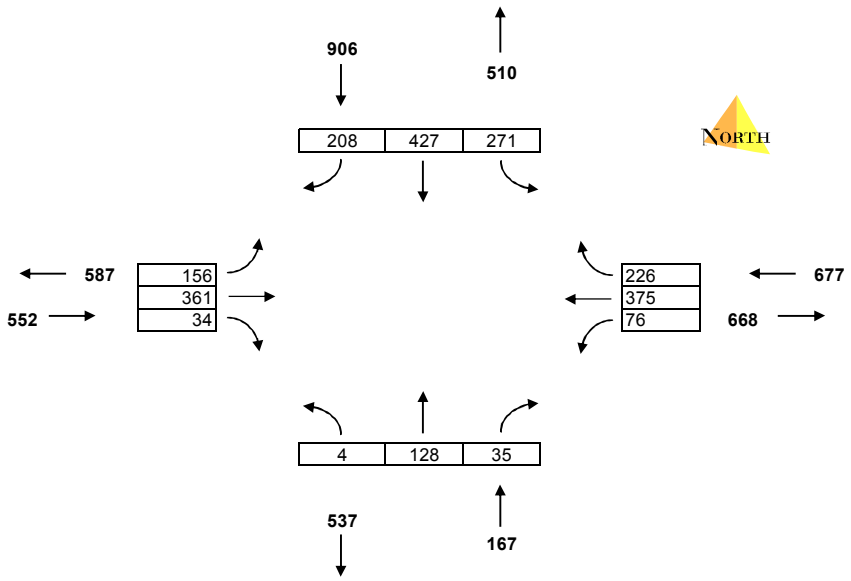

* Turn Calculation Output from NCHRP 255

Insert data into cells with blue font : HEADER INFO, BASE YEAR TURN MOVEMENTS, FUTURE YEAR LINK VOLUMES

OUTPUT DATA IS IN BOLD PRINT.

INTERSECTION :	Kinnaman (north) @ 198th		
SCENARIO :	2035 with 2012 UGB Buildout - Without South Hillsboro		
PEAK HOUR :	PM		
BASE YEAR :	2011	EAST-WEST ROAD:	Kinnaman (north)
FUTURE YEAR :	2035	NORTH-SOUTH ROAD:	198

	PEAK HOUR TURNING MOVEMENTS											
	NORTHBOUND			SOUTHBOUND			EASTBOUND			WESTBOUND		
YEAR	Left	Thru	Right	Left	Thru	Right	Left	Thru	Right	Left	Thru	Right
BASE YEAR	0	290	25	250	445	0	0	0	0	20	0	170
OUTPUT FUTURE	**0**	**299**	**90**	**291**	**436**	**0**	**0**	**0**	**0**	**51**	**0**	**148**

	PEAK HOUR DIRECTIONAL LINK VOLUMES									
	SOUTHLEG		NORTHLEG		WESTLEG		EASTLEG		ALL LEGS	
YEAR	In	Out	In	Out	In	Out	In	Out	In	Out
BASE YEAR	315	465	695	460	0	0	190	275	1,200	1,200
OUTPUT FUTURE	**389**	**488**	**727**	**447**	**0**	**0**	**199**	**381**	1,315	1,315
INPUT FUTURE	394	488	730	447	0	0	202	381	1,325	1,315
									-10.67	

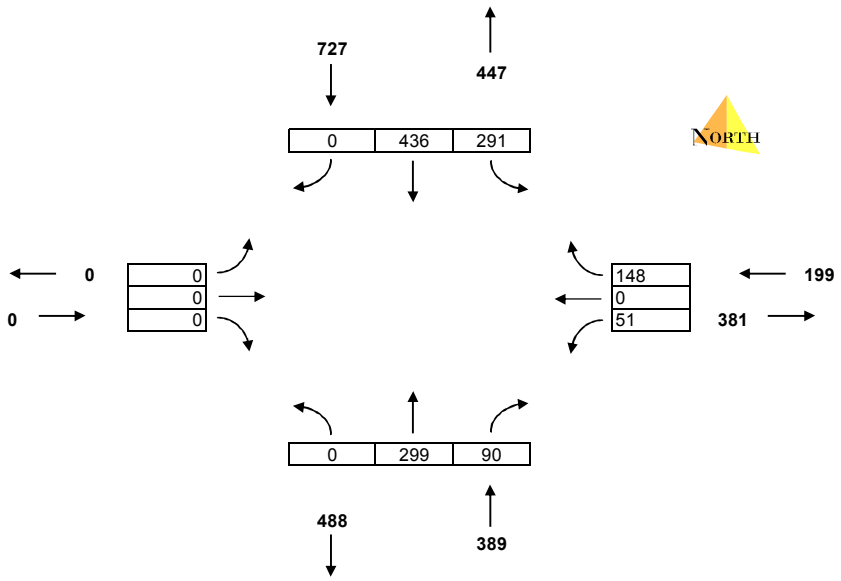

* Turn Calculation Output from NCHRP 255

Insert data into cells with blue font : HEADER INFO, BASE YEAR TURN MOVEMENTS, FUTURE YEAR LINK VOLUMES

OUTPUT DATA IS IN BOLD PRINT.

INTERSECTION :	Kinnaman (south) @ 198th		
SCENARIO :	2035 with 2012 UGB Buildout - Without South Hillsboro		
PEAK HOUR :	PM		
BASE YEAR :	2011	EAST-WEST ROAD:	Kinnaman (south)
FUTURE YEAR :	2035	NORTH-SOUTH ROAD:	198

	PEAK HOUR TURNING MOVEMENTS											
	NORTHBOUND			SOUTHBOUND			EASTBOUND			WESTBOUND		
YEAR	Left	Thru	Right	Left	Thru	Right	Left	Thru	Right	Left	Thru	Right
BASE YEAR	25	240	0	0	285	70	75	0	20	0	0	0
OUTPUT FUTURE	**6**	**264**	**0**	**0**	**303**	**107**	**130**	**0**	**6**	**0**	**0**	**0**

	PEAK HOUR DIRECTIONAL LINK VOLUMES									
	SOUTHLEG		NORTHLEG		WESTLEG		EASTLEG		ALL LEGS	
YEAR	In	Out	In	Out	In	Out	In	Out	In	Out
BASE YEAR	265	305	355	315	95	95	0	0	715	715
OUTPUT FUTURE	**271**	**308**	**409**	**394**	**135**	**113**	**0**	**0**	816	816
INPUT FUTURE	291	308	488	394	146	113	0	0	924	816
									-108.3	

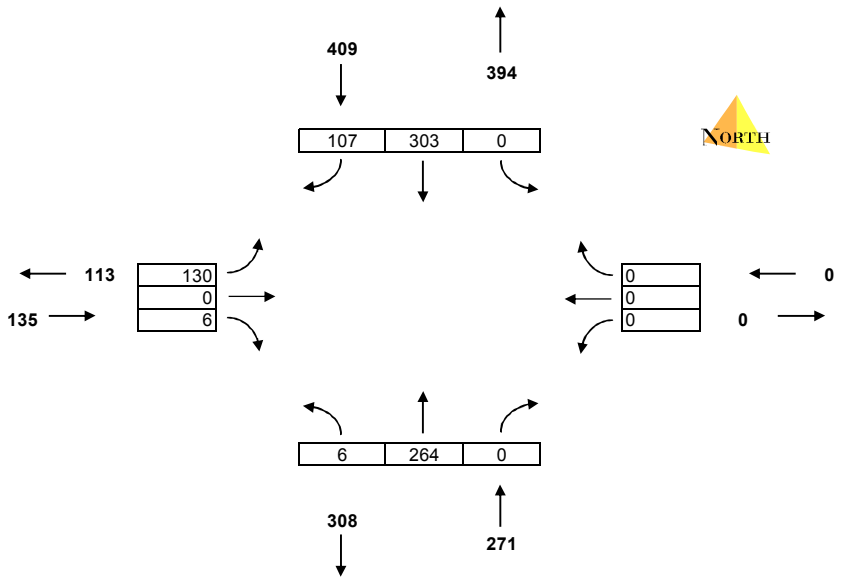

* Turn Calculation Output from NCHRP 255

Insert data into cells with blue font : HEADER INFO, BASE YEAR TURN MOVEMENTS, FUTURE YEAR LINK VOLUMES

OUTPUT DATA IS IN BOLD PRINT.

INTERSECTION :	Kinnaman @ 185th		
SCENARIO :	2035 with 2012 UGB Buildout - Without South Hillsboro		
PEAK HOUR :	PM		
BASE YEAR :	2011	EAST-WEST ROAD:	Kinnaman
FUTURE YEAR :	2035	NORTH-SOUTH ROAD:	185

	PEAK HOUR TURNING MOVEMENTS											
	NORTHBOUND			SOUTHBOUND			EASTBOUND			WESTBOUND		
YEAR	Left	Thru	Right	Left	Thru	Right	Left	Thru	Right	Left	Thru	Right
BASE YEAR	60	360	35	205	500	45	80	240	85	65	255	135
OUTPUT FUTURE	**78**	**591**	**47**	**281**	**1,114**	**59**	**113**	**280**	**161**	**106**	**244**	**164**

	PEAK HOUR DIRECTIONAL LINK VOLUMES									
	SOUTHLEG		NORTHLEG		WESTLEG		EASTLEG		ALL LEGS	
YEAR	In	Out	In	Out	In	Out	In	Out	In	Out
BASE YEAR	455	650	750	575	405	360	455	480	2,065	2,065
OUTPUT FUTURE	**717**	**1,381**	**1,454**	**869**	**555**	**381**	**515**	**608**	3,239	3,239
INPUT FUTURE	712	1,381	1,441	869	550	381	511	608	3,213	3,239
									26.12	

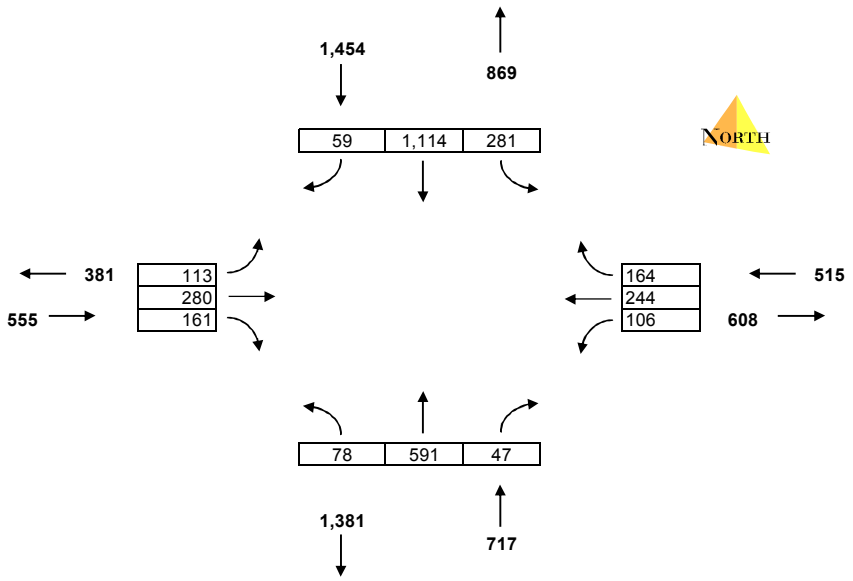

* Turn Calculation Output from NCHRP 255

Insert data into cells with blue font : HEADER INFO, BASE YEAR TURN MOVEMENTS, FUTURE YEAR LINK VOLUMES

OUTPUT DATA IS IN BOLD PRINT.

INTERSECTION :	Farmington @ 198th		
SCENARIO :	2035 with 2012 UGB Buildout - Without South Hillsboro		
PEAK HOUR :	PM		
BASE YEAR :	2011	EAST-WEST ROAD:	Farmington
FUTURE YEAR :	2035	NORTH-SOUTH ROAD:	198

	PEAK HOUR TURNING MOVEMENTS											
	NORTHBOUND			SOUTHBOUND			EASTBOUND			WESTBOUND		
YEAR	Left	Thru	Right	Left	Thru	Right	Left	Thru	Right	Left	Thru	Right
BASE YEAR	0	0	0	160	0	85	75	440	0	0	550	130
OUTPUT FUTURE	**0**	**0**	**0**	**211**	**0**	**82**	**142**	**739**	**0**	**0**	**868**	**317**

	PEAK HOUR DIRECTIONAL LINK VOLUMES									
	SOUTHLEG		NORTHLEG		WESTLEG		EASTLEG		ALL LEGS	
YEAR	In	Out	In	Out	In	Out	In	Out	In	Out
BASE YEAR	0	0	245	205	515	635	680	600	1,440	1,440
OUTPUT FUTURE	**0**	**0**	**294**	**459**	**881**	**950**	**1,185**	**950**	2,360	2,360
INPUT FUTURE	0	0	306	459	920	950	1,240	950	2,466	2,360
									-106.3	

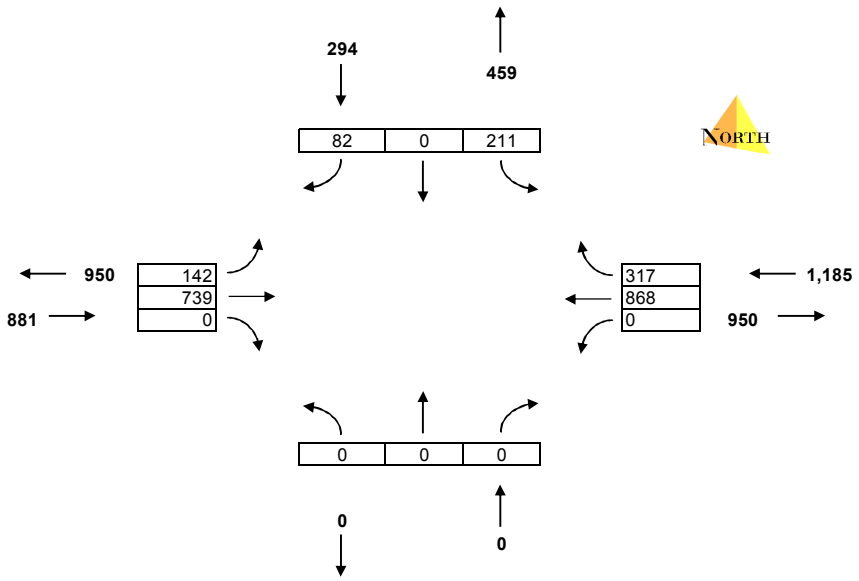

* Turn Calculation Output from NCHRP 255

Insert data into cells with blue font : HEADER INFO, BASE YEAR TURN MOVEMENTS, FUTURE YEAR LINK VOLUMES

OUTPUT DATA IS IN BOLD PRINT.

INTERSECTION :	Farmington @ 185th		
SCENARIO :	2035 with 2012 UGB Buildout - Without South Hillsboro		
PEAK HOUR :	PM		
BASE YEAR :	2011	EAST-WEST ROAD:	Farmington
FUTURE YEAR :	2035	NORTH-SOUTH ROAD:	185

	PEAK HOUR TURNING MOVEMENTS											
	NORTHBOUND			SOUTHBOUND			EASTBOUND			WESTBOUND		
YEAR	Left	Thru	Right	Left	Thru	Right	Left	Thru	Right	Left	Thru	Right
BASE YEAR	205	245	60	105	300	145	100	405	150	110	650	55
OUTPUT FUTURE	**229**	**299**	**63**	**226**	**511**	**334**	**187**	**647**	**190**	**150**	**1,200**	**111**

	PEAK HOUR DIRECTIONAL LINK VOLUMES									
	SOUTHLEG		NORTHLEG		WESTLEG		EASTLEG		ALL LEGS	
YEAR	In	Out	In	Out	In	Out	In	Out	In	Out
BASE YEAR	510	560	550	400	655	1,000	815	570	2,530	2,530
OUTPUT FUTURE	**590**	**852**	**1,071**	**596**	**1,023**	**1,762**	**1,462**	**935**	4,146	4,146
INPUT FUTURE	589	852	1,070	596	1,022	1,762	1,460	935	4,142	4,146
									3.761	

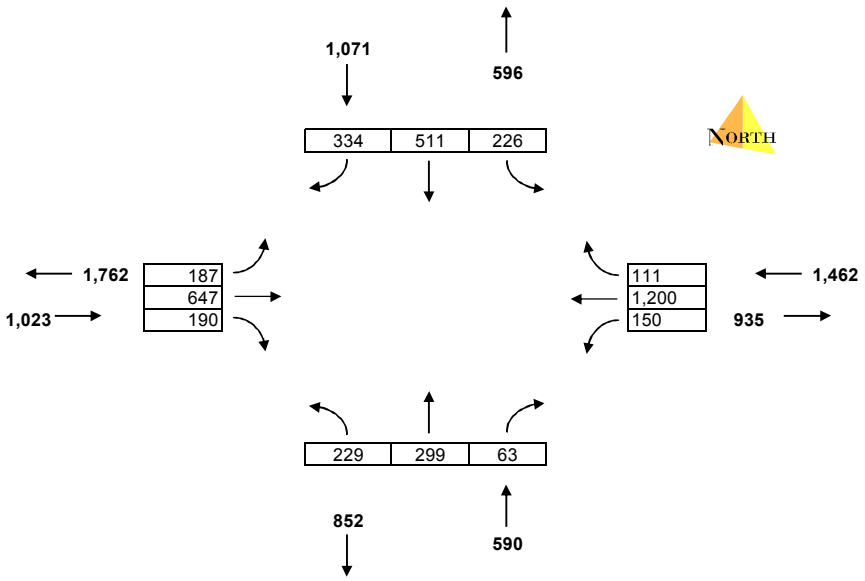

* Turn Calculation Output from NCHRP 255

Insert data into cells with blue font : HEADER INFO, BASE YEAR TURN MOVEMENTS, FUTURE YEAR LINK VOLUMES

OUTPUT DATA IS IN BOLD PRINT.

INTERSECTION :	Cornelius Pass Rd @ johnson St		
SCENARIO :	2035 with 2012 UGB Buildout - Without South Hillsboro		
PEAK HOUR :	PM		
BASE YEAR :	2011	EAST-WEST ROAD:	Johnson St
FUTURE YEAR :	2035	NORTH-SOUTH ROAD:	Cornelius Pass

	PEAK HOUR TURNING MOVEMENTS											
	NORTHBOUND			SOUTHBOUND			EASTBOUND			WESTBOUND		
YEAR	Left	Thru	Right	Left	Thru	Right	Left	Thru	Right	Left	Thru	Right
BASE YEAR	85	175	150	35	455	20	15	15	125	115	50	15
OUTPUT FUTURE	**51**	**222**	**166**	**143**	**783**	**44**	**77**	**67**	**237**	**119**	**66**	**42**

	PEAK HOUR DIRECTIONAL LINK VOLUMES									
	SOUTHLEG		NORTHLEG		WESTLEG		EASTLEG		ALL LEGS	
YEAR	In	Out	In	Out	In	Out	In	Out	In	Out
BASE YEAR	410	695	510	205	155	155	180	200	1,255	1,255
OUTPUT FUTURE	**439**	**1,139**	**969**	**341**	**382**	**161**	**227**	**376**	2,017	2,017
INPUT FUTURE	436	1,139	964	341	380	161	226	376	2,006	2,017

-11.1

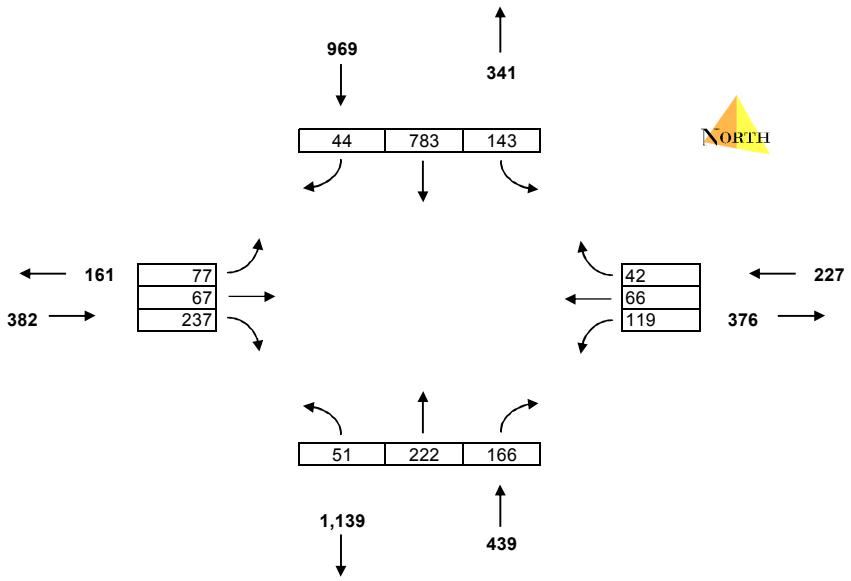

* Turn Calculation Output from NCHRP 255

Insert data into cells with blue font : HEADER INFO, BASE YEAR TURN MOVEMENTS, FUTURE YEAR LINK VOLUMES

OUTPUT DATA IS IN BOLD PRINT.

INTERSECTION :	198th Ave @ Blanton (south)		
SCENARIO :	2035 with 2012 UGB Buildout - Without South Hillsboro		
PEAK HOUR :	PM		
BASE YEAR :	2011	EAST-WEST ROAD:	Blanton (South)
FUTURE YEAR :	2035	NORTH-SOUTH ROAD:	198

	PEAK HOUR TURNING MOVEMENTS											
	NORTHBOUND			SOUTHBOUND			EASTBOUND			WESTBOUND		
YEAR	Left	Thru	Right	Left	Thru	Right	Left	Thru	Right	Left	Thru	Right
BASE YEAR	150	120	0	0	205	285	130	0	150	0	0	0
OUTPUT FUTURE	**2**	**236**	**0**	**0**	**375**	**27**	**37**	**0**	**6**	**0**	**0**	**0**

	PEAK HOUR DIRECTIONAL LINK VOLUMES									
	SOUTHLEG		NORTHLEG		WESTLEG		EASTLEG		ALL LEGS	
YEAR	In	Out	In	Out	In	Out	In	Out	In	Out
BASE YEAR	270	355	490	250	280	435	0	0	1,040	1,040
OUTPUT FUTURE	**238**	**381**	**402**	**273**	**43**	**29**	**0**	**0**	683	683
INPUT FUTURE	260	381	511	273	48	29	0	0	818	683
									135.4	

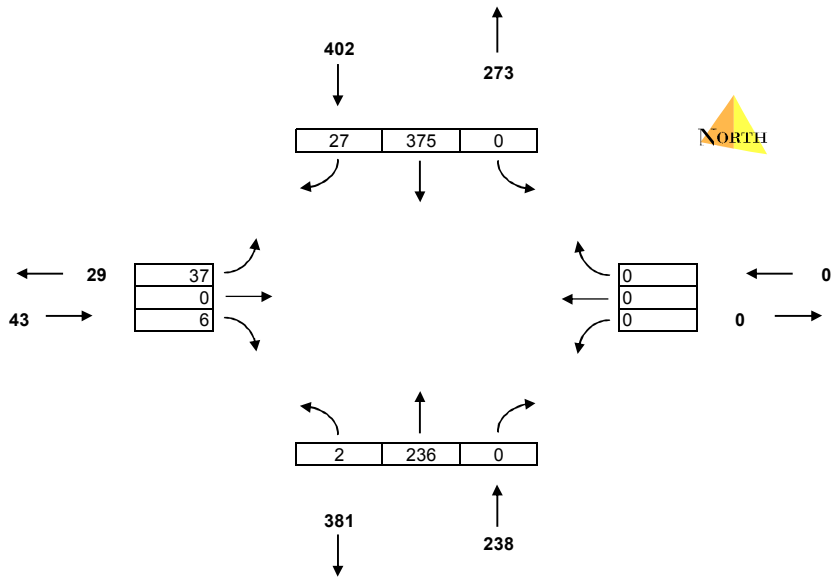

* Turn Calculation Output from NCHRP 255

Insert data into cells with blue font : HEADER INFO, BASE YEAR TURN MOVEMENTS, FUTURE YEAR LINK VOLUMES

OUTPUT DATA IS IN BOLD PRINT.

INTERSECTION :	198th Ave @ Blanton St North		
SCENARIO :	2035 with 2012 UGB Buildout - Without South Hillsboro		
PEAK HOUR :	PM		
BASE YEAR :	2011	EAST-WEST ROAD:	Blanton St (North)
FUTURE YEAR :	2035	NORTH-SOUTH ROAD:	198

	PEAK HOUR TURNING MOVEMENTS											
	NORTHBOUND			SOUTHBOUND			EASTBOUND			WESTBOUND		
YEAR	Left	Thru	Right	Left	Thru	Right	Left	Thru	Right	Left	Thru	Right
BASE YEAR	0	200	50	135	390	0	0	0	0	100	0	215
OUTPUT FUTURE	**0**	**211**	**72**	**214**	**419**	**0**	**0**	**0**	**0**	**92**	**0**	**215**

	PEAK HOUR DIRECTIONAL LINK VOLUMES									
	SOUTHLEG		NORTHLEG		WESTLEG		EASTLEG		ALL LEGS	
YEAR	In	Out	In	Out	In	Out	In	Out	In	Out
BASE YEAR	250	490	525	415	0	0	315	185	1,090	1,090
OUTPUT FUTURE	**282**	**511**	**633**	**426**	**0**	**0**	**307**	**286**	1,222	1,222
INPUT FUTURE	273	511	612	426	0	0	297	286	1,182	1,222
									-40.65	

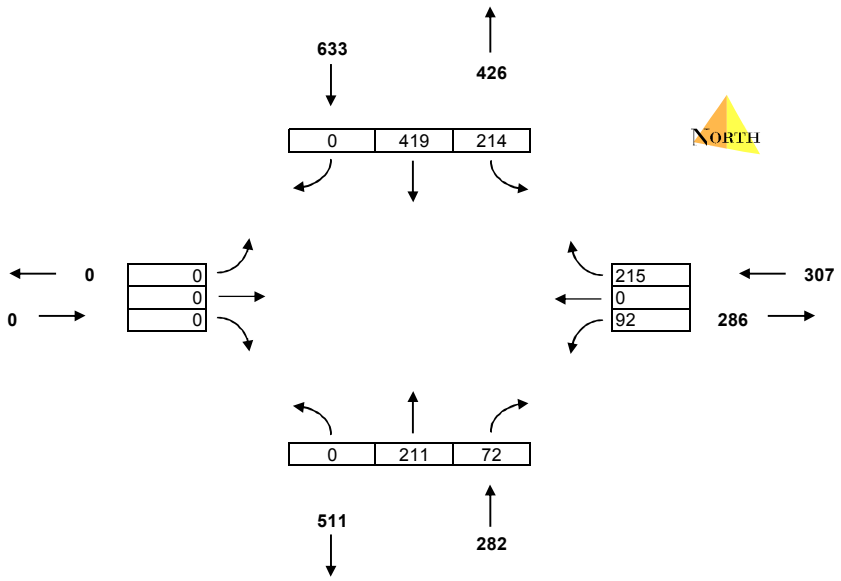

* Turn Calculation Output from NCHRP 255

Insert data into cells with blue font : HEADER INFO, BASE YEAR TURN MOVEMENTS, FUTURE YEAR LINK VOLUMES

OUTPUT DATA IS IN BOLD PRINT.

INTERSECTION :	185th Ave @ Blanton St (South)		
SCENARIO :	2035 with 2012 UGB Buildout - Without South Hillsboro		
PEAK HOUR :	PM		
BASE YEAR :	2011	EAST-WEST ROAD:	Blanton (South)
FUTURE YEAR :	2035	NORTH-SOUTH ROAD:	185

	PEAK HOUR TURNING MOVEMENTS											
	NORTHBOUND			SOUTHBOUND			EASTBOUND			WESTBOUND		
YEAR	Left	Thru	Right	Left	Thru	Right	Left	Thru	Right	Left	Thru	Right
BASE YEAR	0	515	60	175	785	0	0	0	0	135	0	150
OUTPUT FUTURE	**0**	**777**	**55**	**224**	**1,419**	**0**	**0**	**0**	**0**	**159**	**0**	**207**

	PEAK HOUR DIRECTIONAL LINK VOLUMES									
	SOUTHLEG		NORTHLEG		WESTLEG		EASTLEG		ALL LEGS	
YEAR	In	Out	In	Out	In	Out	In	Out	In	Out
BASE YEAR	575	920	960	665	0	0	285	235	1,820	1,820
OUTPUT FUTURE	**832**	**1,579**	**1,643**	**984**	**0**	**0**	**366**	**279**	2,841	2,841
INPUT FUTURE	852	1,579	1,692	984	0	0	376	279	2,921	2,841
									79.51	

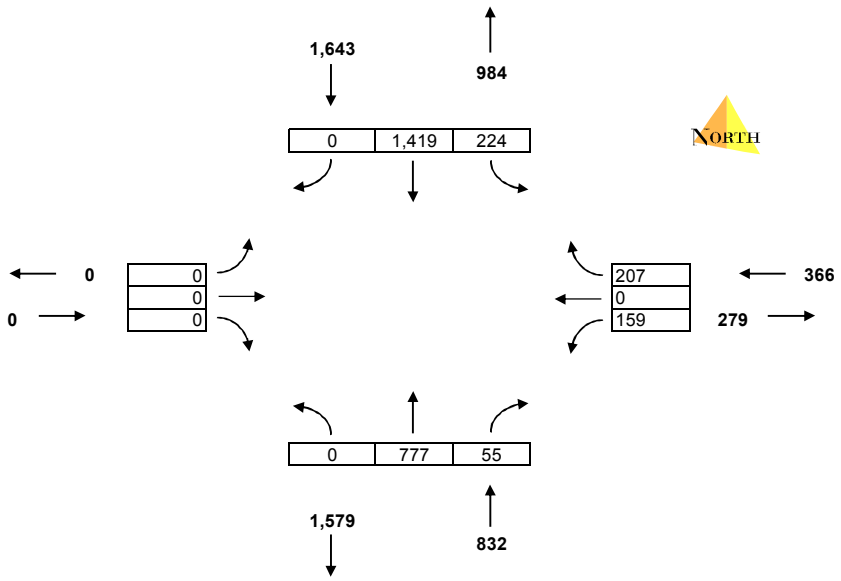

* Turn Calculation Output from NCHRP 255

Insert data into cells with blue font : HEADER INFO, BASE YEAR TURN MOVEMENTS, FUTURE YEAR LINK VOLUMES

OUTPUT DATA IS IN BOLD PRINT.

INTERSECTION :	185th Ave @ Blanton North		
SCENARIO :	2035 with 2012 UGB Buildout - Without South Hillsboro		
PEAK HOUR :	PM		
BASE YEAR :	2011	EAST-WEST ROAD:	Blanton (north)
FUTURE YEAR :	2035	NORTH-SOUTH ROAD:	185

	PEAK HOUR TURNING MOVEMENTS											
	NORTHBOUND			SOUTHBOUND			EASTBOUND			WESTBOUND		
YEAR	Left	Thru	Right	Left	Thru	Right	Left	Thru	Right	Left	Thru	Right
BASE YEAR	90	575	0	0	760	265	135	0	110	0	0	0
OUTPUT FUTURE	**83**	**897**	**0**	**0**	**1,362**	**277**	**197**	**0**	**162**	**0**	**0**	**0**

	PEAK HOUR DIRECTIONAL LINK VOLUMES									
	SOUTHLEG		NORTHLEG		WESTLEG		EASTLEG		ALL LEGS	
YEAR	In	Out	In	Out	In	Out	In	Out	In	Out
BASE YEAR	665	870	1,025	710	245	355	0	0	1,935	1,935
OUTPUT FUTURE	**980**	**1,524**	**1,639**	**1,095**	**360**	**360**	**0**	**0**	2,978	2,978
INPUT FUTURE	984	1,524	1,647	1,095	361	360	0	0	2,992	2,978

14.01

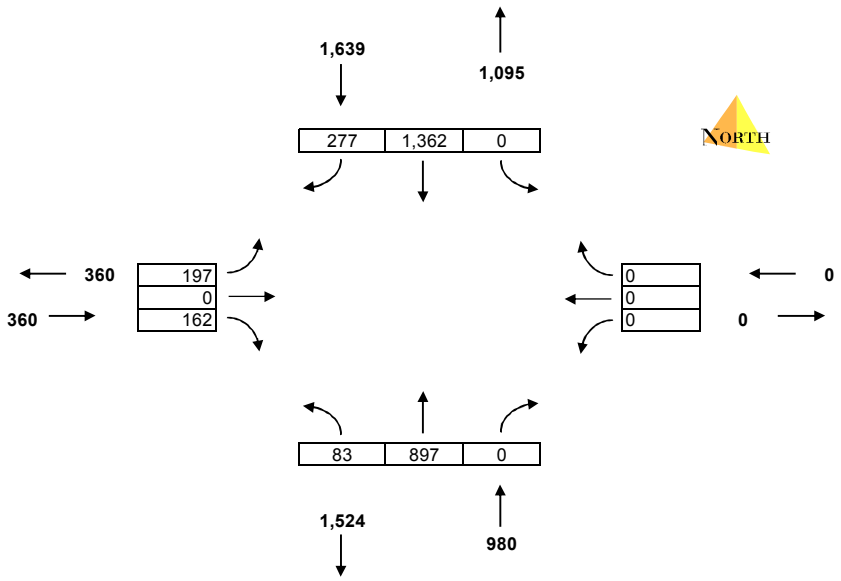

* Turn Calculation Output from NCHRP 255

Appendix C: 2035 Traffic Volumes with South Hillsboro

Project: South Hillsboro Focus Area Plan
Job #: ODOT0000-0737
Subject: ***AM Build Turning Movement Volumes***
Created: 6/8/2011
Rev. Date: 3/5/2013

Less than Existing Less than TV Hwy Base

Int No.	Synchro ID	Intersection	Direction	Movement	2011 Existing BALANCED DHV 1-Hr Volume AM Peak	2010 Hillsboro Model Turn Volumes	Jun-12 2035 SoHi Model Turn Volumes w/229th	2035 SoHi - 2010 Turn Vol Diff	2035 SoHi Network Unbalanced	Difference (Volume Adjustment)	2035 SoHi Network Adjusted	Difference (Volume Balancing)	2035 SoHi Network Balanced w/229th	Oct-12 2035 SoHi Network Rerun Turn Vol w/o 229th	Oct-June Difference (Volume Balancing)	2035 Volume Adjustments	June 2035 SoHi Balanced Volumes w/o 229th	Adjusted to SoHi Internal and Surrounding area	Final Combined Volumes
1	10	TV Highway @ SE River Rd.*		EBL	5	0	0	0	5		5		5	0	0	0	5	0	5
	10	2 hr AM Turning Movement Count	EB	EBT	695	597	656	59	755	150	905		905	682	26	25	930	(25)	905
	10	Count Date: 5/25/2010		EBR	275	242	243	1	275	(25)	250		250	188	(55)	(50)	200	50	250
	10	2010		WBL	30	0	4	4	35	80	115		115	0	(4)	(5)	110	5	115
	10		WB	WBT	905	843	1295	452	1355		1355		1355	1263	(32)	5	1360	(5)	1355
	10			WBR	20	20	35	15	35	10	45		45	53	18	0	45	0	45
	10			NBL	290	381	502	121	410		410		410	436	(66)	(65)	345	60	405
	10		NB	NBT	95	137	362	225	320	(110)	210		210	317	(45)	(45)	165	(70)	95
	10			NBR	10	83	116	33	45	110	155		155	48	(68)	(25)	130	25	155
	10			SBL	45	34	30	(4)	40	20	60		60	32	2	0	60	0	60
	10		SB	SBT	95	20	21	1	95	(20)	75		75	15	(6)	0	75	(5)	70
	10			SBR	5	0	0	0	5		5		5	2	2	0	5	0	5
			TEV	**TEV**	**2470**	**2357**	**3264**	**907**	**3375**	**215**	**3590**	**0**	**3590**	**3036**	**(228)**	**(160)**	**3430**	**35**	**3465**
12	70	SW River Rd. @ SE Davis Rd.		EBL	0	0	0	0	0		0		0	0	0	0	0	0	0
	70	12 hr AM Turning Movement Count	EB	EBT	0	0	0	0	0		0		0	0	0	0	0	0	0
	70	Count Date: 5/24/2011		EBR	0	0	0	0	0		0		0	0	0	0	0	0	0
	70	2011		WBL	60	99	192	93	155		155		155	189	(3)	0	155	0	155
	70		WB	WBT	0	0	0	0	0		0		0	0	0	0	0	0	0
	70			WBR	100	48	183	135	235		235		235	196	13	0	235	0	235
	70			NBL	0	0	0	0	0		0		0	0	0	0	0	0	0
	70		NB	NBT	405	422	638	216	620		620		620	646	8	0	620	0	620
	70			NBR	125	184	283	99	225		225		225	279	(4)	0	225	0	225
	70			SBL	105	121	132	11	115	5	120		120	102	(30)	0	120	0	120
	70		SB	SBT	210	175	140	(35)	175	35	210		210	139	(1)	0	210	0	210
	70			SBR	0	0	0	0	0		0		0	0	0	0	0	0	0
			TEV	**TEV**	**1005**	**1049**	**1568**	**519**	**1525**	**40**	**1565**	**0**	**1565**	**1551**	**(17)**	**0**	**1565**	**0**	**1565**
13	25	Witch Hazel at Brookwood		EBL		0	124	124	125		125		125	126	2	85	210	(210)	0
	25		EB	EBT		0	3	3	5		5		5	3	0	90	95	(95)	0
	25	This intersection was balanced off the		EBR		0	0	0	0		0		0	0	0	5	5	225	230
	25	neighboring intersections and the combination		WBL		0	0	0	0	5	5		5	0	0	5	10	(10)	0
	25	of the surrounding SoHi area as well as the	WB	WBT		0	0	0	0	10	10		10	0	0	15	25	(25)	0
	25	SoHi area as well as the internal area. It did not		WBR		85	221	136	135		135	55	190	265	44	35	225	(160)	65
	25	go through the volume development process.		NBL		0	0	0	0		0	5	5	0	0	0	5	(5)	0
	25		NB	NBT		207	407	200	200		200	5	205	396	(11)	140	345	605	950
	25			NBR		0	3	3	5		5		5	2	(1)	40	45	(30)	15
	25			SBL		28	40	12	10		10	65	75	36	(4)	35	110	(110)	0
	25		SB	SBT		158	178	20	20		20	40	60	162	(16)	145	205	95	300
	25			SBR		0	0	0	0		0	5	5	0	0	30	35	105	140
			TEV	**TEV**	**0**	**478**	**976**	**498**	**500**	**15**	**515**	**175**	**690**	**990**	**14**	**625**	**1315**	**385**	**1700**
14	80	SE Alexander St. @ SE Brookwood Rd.		EBL	85	0	124	124	210		210		210	126	2	0	210	0	210
	80	2 hr AM Turning Movement Count	EB	EBT	90	0	3	3	95		95		95	3	0	0	95	0	95
	80	Count Date: 5/24/2011		EBR	5	0	0	0	5		5		5	0	0	0	5	0	5
	80	2011		WBL	5	0	0	0	5	5	10		10	0	0	0	10	0	10
	80		WB	WBT	15	0	0	0	15	10	25		25	0	0	0	25	0	25
	80			WBR	35	85	221	136	170		170	55	225	265	44	0	225	0	225
	80			NBL	0	0	0	0	0		0	5	5	0	0	0	5	0	5
	80		NB	NBT	140	207	407	200	340		340	5	345	396	(11)	0	345	0	345
	80			NBR	40	0	3	3	45		45		45	2	(1)	0	45	0	45
	80			SBL	35	28	40	12	45		45	65	110	36	(4)	0	110	0	110
	80		SB	SBT	145	158	178	20	165		165	40	205	162	(16)	0	205	(5)	200
	80			SBR	30	0	0	0	30		30	5	35	0	0	0	35	0	35
			TEV	**TEV**	**625**	**478**	**976**	**498**	**1125**	**15**	**1140**	**175**	**1315**	**990**	**14**	**0**	**1315**	**(5)**	**1310**

Project: South Hillsboro Focus Area Plan
Job #: ODOT0000-0737
Subject: ***AM Build Turning Movement Volumes***
Created: 6/8/2011
Rev. Date: 3/5/2013

Less than Existing Less than TV Hwy Base

Int No.	Synchro ID	Intersection	Direction	Movement	2011 Existing BALANCED DHV 1-Hr Volume AM Peak	2010 Hillsboro Model Turn Volumes	Jun-12 2035 SoHi Model Turn Volumes w/229th	2035 SoHi - 2010 Turn Vol Diff	2035 SoHi Network Unbalanced	Difference (Volume Adjustment)	2035 SoHi Network Adjusted	Difference (Volume Balancing)	2035 SoHi Network Balanced w/229th	Oct-12 2035 SoHi Network Rerun Turn Vol w/o 229th	Oct-June Difference (Volume Balancing)	2035 Volume Adjustments	June 2035 SoHi Balanced Volumes w/o 229th	Adjusted to SoHi Internal and Surrounding area	Final Combined Volumes
15	90	SE Alexander St. @ SE 234th Ave.		EBL	75	54	170	116	190		190	20	210	181	11	35	245	(95)	150
	90	12 hr AM Turning Movement Count	EB	EBT	40	10	31	21	60		60		60	21	(10)	(35)	25	0	25
	90	Count Date: 4/1/2008		EBR	5	0	0	0	5	5	10		10	0	0	0	10	0	10
	90	2011		WBL	10	22	50	28	40		40		40	43	(7)	(25)	15	0	15
	90		WB	WBT	30	165	168	3	35		35		35	201	33	0	35	0	35
	90			WBR	40	6	182	176	215		215	20	235	237	55	190	425	0	425
	90			NBL	0	0	128	128	130		130		130	95	(33)	0	130	0	130
	90		NB	NBT	15	222	517	295	310		310		310	642	125	115	425	0	425
	90			NBR	5	10	150	140	145		145		145	34	(116)	(115)	30	0	30
	90			SBL	35	0	21	21	55		55		55	98	77	65	120	0	120
	90		SB	SBT	25	15	160	145	170		170		170	180	20	25	195	(25)	170
	90			SBR	65	70	81	11	75		75		75	126	45	0	75	0	75
			TEV	**TEV**	**345**	**574**	**1658**	**1084**	**1430**	**5**	**1435**	**40**	**1475**	**1858**	**200**	**255**	**1730**	**(120)**	**1610**
16	100	SE Alexander St. @ SE 229th Ave.		EBL	35	16	130	114	150		150		150	0	(130)	(145)	5	0	5
	100	12 hr AM Turning Movement Count	EB	EBT	0	0	72	72	70		70		70	153	81	65	135	0	135
	100	Count Date: 5/24/2011		EBR	65	3	0	(3)	60	5	65		65	0	0	0	65	0	65
	100	2011		WBL	0	0	1	1	0	5	5		5	4	3	25	30	0	30
	100		WB	WBT	0	0	314	314	315		315		315	418	104	90	405	0	405
	100			WBR	0	0	172	172	170		170		170	0	(172)	(165)	5	0	5
	100			NBL	65	58	18	(40)	25		25		25	63	45	100	125	0	125
	100		NB	NBT	125	239	214	(25)	100		100		100	0	(214)	(95)	5	0	5
	100			NBR	0	0	11	11	10		10		10	23	12	0	10	0	10
	100			SBL	0	0	99	99	100		100	55	155	0	(99)	(150)	5	0	5
	100		SB	SBT	120	156	7	(149)	120	(100)	20	5	25	0	(7)	(20)	5	0	5
	100			SBR	40	134	69	(65)	40	(20)	20	5	25	0	(69)	(20)	5	0	5
			TEV	**TEV**	**450**	**606**	**1107**	**501**	**1160**	**(110)**	**1050**	**65**	**1115**	**661**	**(446)**	**(315)**	**800**	**0**	**800**
17	110	SE Alexander St. @ Cornelius Pass Rd		EBL		0	348	348	350		350	(10)	340	351	3	0	340	(75)	265
	110		EB	EBT		0	134	134	135		135		135	159	25	(50)	85	0	85
	110			EBR		0	2	2	0		0	45	45	3	1	(40)	5	0	5
	110			WBL		0	0	0	0		0	5	5	0	0	0	5	0	5
	110		WB	WBT		0	282	282	280		280		280	259	(23)	(60)	220	0	220
	110			WBR		0	193	193	195		195		195	216	23	60	255	(75)	180
	110			NBL		0	72	72	70		70		70	60	(12)	(20)	50	0	50
	110		NB	NBT		0	1208	1208	1210		1210		1210	1270	62	20	1230	(25)	1205
	110			NBR		0	2	2	0		0	40	40	5	3	0	40	0	40
	110			SBL		0	94	94	95		95	30	125	105	11	50	175	0	175
	110		SB	SBT		0	193	193	195		195	35	230	199	6	40	270	10	280
	110			SBR		0	191	191	190		190	30	220	195	4	20	240	0	240
			TEV	**TEV**	**0**	**0**	**2719**	**2719**	**2720**	**0**	**2720**	**175**	**2895**	**2822**	**103**	**20**	**2915**	**(165)**	**2750**
18	120	SW 209th Ave. @ SW Blanton Rd.		EBL	0	0	249	249	250		250		250	269	20	0	250	0	250
	120	2 hr PM Turning Movement Count	EB	EBT	0	0	201	201	200		200		200	205	4	0	200	0	200
	120	Count Date: 5/20/2010		EBR	0	0	58	58	60		60		60	69	11	0	60	0	60
	120	2010		WBL	10	0	48	48	60		60		60	58	10	0	60	0	60
	120		WB	WBT	0	0	82	82	80		80		80	89	7	0	80	0	80
	120			WBR	35	0	68	68	105		105		105	59	(9)	0	105	0	105
	120			NBL	0	0	186	186	185		185		185	169	(17)	0	185	0	185
	120		NB	NBT	590	599	608	9	600		600		600	636	28	0	600	0	600
	120			NBR	30	0	112	112	140		140		140	132	20	0	140	0	140
	120			SBL	35	0	2	2	35	5	40		40	2	0	0	40	0	40
	120		SB	SBT	390	347	377	30	420		420		420	370	(7)	0	420	0	420
	120			SBR	0	0	90	90	90		90		90	99	9	0	90	0	90
			TEV	**TEV**	**1090**	**946**	**2081**	**1135**	**2225**	**5**	**2230**	**0**	**2230**	**2157**	**76**	**0**	**2230**	**0**	**2230**

Project: South Hillsboro Focus Area Plan
Job #: ODOT0000-0737
Subject: ***AM Build Turning Movement Volumes***
Created: 6/8/2011
Rev. Date: 3/5/2013

Less than Existing Less than TV Hwy Base

Int No.	Synchro ID	Intersection	Direction	Movement	2011 Existing BALANCED DHV 1-Hr Volume AM Peak	2010 Hillsboro Model Turn Volumes	Jun-12 2035 SoHi Model Turn Volumes w/229th	2035 SoHi - 2010 Turn Vol Diff	2035 SoHi Network Unbalanced	Difference (Volume Adjustment)	2035 SoHi Network Adjusted	Difference (Volume Balancing)	2035 SoHi Network Balanced w/229th	Oct-12 2035 SoHi Network Rerun Turn Vol w/o 229th	Oct-June Difference (Volume Balancing)	2035 Volume Adjustments	June 2035 SoHi Balanced Volumes w/o 229th	Adjusted to SoHi Internal and Surrounding area	Final Combined Volumes
21	130	SE Century Blvd. @ SW Kinnaman Rd.		EBL		0	0	0	0		0		0	0	0	0	0	0	0
	130		EB	EBT		0	0	0	0		0		0	0	0	0	0	0	0
	130			EBR		0	0	0	0		0		0	0	0	0	0	0	0
	130			WBL		0	8	8	10		10	20	30	8	0	0	30	0	30
	130		WB	WBT		0	0	0	0		0		0	0	0	0	0	0	0
	130			WBR		0	17	17	15		15	30	45	19	2	0	45	0	45
	130			NBL		0	0	0	0		0		0	0	0	0	0	0	0
	130		NB	NBT		0	710	710	710		710	(170)	540	707	(3)	0	540	0	540
	130			NBR		0	95	95	95		95		95	61	(34)	0	95	0	95
	130			SBL		0	11	11	10		10		10	9	(2)	0	10	0	10
	130		SB	SBT		0	152	152	150		150		150	140	(12)	0	150	0	150
	130			SBR		0	0	0	0		0		0	0	0	0	0	0	0
			TEV	**TEV**	**0**	**0**	**993**	**993**	**990**	**0**	**990**	**(120)**	**870**	**944**	**(49)**	**0**	**870**	**0**	**870**
22	140	Cornelius Pass Rd. @ SW Kinnaman Rd.		EBL		0	63	63	65		65		65	121	58	0	65	0	65
	140		EB	EBT		0	42	42	40		40		40	42	0	0	40	0	40
	140			EBR		0	65	65	65		65	(40)	25	67	2	0	25	0	25
	140			WBL		0	12	12	10		10	(5)	5	13	1	0	5	0	5
	140		WB	WBT		0	158	158	160		160		160	136	(22)	0	160	0	160
	140			WBR		0	185	185	185		185		185	181	(4)	0	185	0	185
	140			NBL		0	35	35	35		35		35	14	(21)	0	35	0	35
	140		NB	NBT		0	1034	1034	1035		1035	40	1075	1032	(2)	0	1075	0	1075
	140			NBR		0	62	62	60		60	(40)	20	83	21	0	20	0	20
	140			SBL		0	42	42	40		40		40	43	1	0	40	0	40
	140		SB	SBT		0	131	131	130		130	45	175	138	7	0	175	0	175
	140			SBR		0	22	22	20		20		20	22	0	0	20	0	20
			TEV	**TEV**	**0**	**0**	**1851**	**1851**	**1845**	**0**	**1845**	**0**	**1845**	**1892**	**41**	**0**	**1845**	**0**	**1845**
23	150	SW 209th Ave. @ SW Kinnaman Rd.		EBL	0	0	202	202	200		200		200	222	20	0	200	0	200
	150	2 hr PM Turning Movement Count	EB	EBT	0	0	51	51	50		50		50	59	8	0	50	0	50
	150	Count Date: 5/18/2010		EBR	0	0	38	38	40		40		40	37	(1)	0	40	0	40
	150	2010		WBL	15	6	62	56	70		70		70	62	0	0	70	0	70
	150		WB	WBT	0	0	135	135	135		135		135	119	(16)	0	135	0	135
	150			WBR	60	94	168	74	135		135		135	175	7	0	135	0	135
	150			NBL	0	0	184	184	185		185		185	171	(13)	0	185	0	185
	150		NB	NBT	550	472	495	23	575		575		575	501	6	0	575	0	575
	150			NBR	20	7	152	145	165		165		165	148	(4)	0	165	0	165
	150			SBL	0	24	29	5	5		5		5	30	1	0	5	0	5
	150		SB	SBT	360	182	291	109	470		470		470	299	8	0	470	0	470
	150			SBR	0	0	4	4	5		5		5	9	5	0	5	0	5
			TEV	**TEV**	**1005**	**785**	**1811**	**1026**	**2035**	**0**	**2035**	**0**	**2035**	**1832**	**21**	**0**	**2035**	**0**	**2035**
26	160	SW Rosa Rd. @ SW 229th Ave.		EBL	0	0	0	0	0		0		0			0	0	0	0
	160	2 hr AM Turning Movement Count	EB	EBT	0	0	0	0	0		0		0			0	0	0	0
	160	Count Date: 5/26/2011		EBR	0	0	0	0	0		0		0			0	0	0	0
	160	2011		WBL	0	0	0	0	0	10	10		10			0	10	0	10
	160		WB	WBT	0	0	0	0	0		0		0			0	0	0	0
	160			WBR	0	0	274	274	275		275		275			0	275	0	275
	160			NBL	0	0	0	0	0		0		0			0	0	0	0
	160		NB	NBT	105	315	265	(50)	55	50	105		105			0	105	0	105
	160			NBR	0	0	0	0	0		0	35	35			0	35	0	35
	160			SBL	0	0	72	72	70		70	5	75			0	75	0	75
	160		SB	SBT	30	117	100	(17)	15	30	45		45			0	45	0	45
	160			SBR	0	0	0	0	0		0		0			0	0	0	0
			TEV	**TEV**	**135**	**432**	**711**	**279**	**415**	**90**	**505**	**40**	**545**	**0**		**0**	**545**	**0**	**545**

Project: South Hillsboro Focus Area Plan
Job #: ODOT0000-0737
Subject: ***AM Build Turning Movement Volumes***
Created: 6/8/2011
Rev. Date: 3/5/2013

Less than Existing Less than TV Hwy Base

Int No.	Synchro ID	Intersection	Direction	Movement	2011 Existing BALANCED DHV 1-Hr Volume AM Peak	2010 Hillsboro Model Turn Volumes	Jun-12 2035 SoHi Model Turn Volumes w/229th	2035 SoHi - 2010 Turn Vol Diff	2035 SoHi Network Unbalanced	Difference (Volume Adjustment)	2035 SoHi Network Adjusted	Difference (Volume Balancing)	2035 SoHi Network Balanced w/229th	Oct-12 2035 SoHi Network Rerun Turn Vol w/o 229th	Oct-June Difference (Volume Balancing)	2035 Volume Adjustments	June 2035 SoHi Balanced Volumes w/o 229th	Adjusted to SoHi Internal and Surrounding area	Final Combined Volumes
27	170	Cornelius Pass Rd. @ SW Rosa Rd.		EBL		0	191	191	190		190		190			0	190	0	190
	170		EB	EBT		0	90	90	90		90		90			0	90	0	90
	170			EBR		0	0	0	0		0	5	5			0	5	0	5
	170			WBL		0	7	7	5		5		5			0	5	0	5
	170		WB	WBT		0	139	139	140		140		140			0	140	0	140
	170			WBR		0	247	247	245		245		245			0	245	0	245
	170			NBL		0	0	0	0		0	10	10			0	10	0	10
	170		NB	NBT		0	514	514	515		515	(15)	500			0	500	0	500
	170			NBR		0	2	2	0		0	5	5			0	5	0	5
	170			SBL		0	72	72	70		70		70			0	70	0	70
	170		SB	SBT		0	6	6	5		5	50	55			0	55	0	55
	170			SBR		0	112	112	110		110		110			0	110	0	110
			TEV	**TEV**	**0**	**0**	**1380**	**1380**	**1370**	**0**	**1370**	**55**	**1425**	**0**		**0**	**1425**	**0**	**1425**
28	180	SW 209th Ave. @ SW Rosa Rd.		EBL	0	0	169	169	170		170		170			0	170	0	170
	180	2 hr AM Turning Movement Count	EB	EBT	0	0	175	175	175		175		175			0	175	0	175
	180	Count Date: 4/1/2008		EBR	0	0	62	62	60		60		60			0	60	0	60
	180	2008		WBL	40	4	0	(4)	35	10	45		45			0	45	0	45
	180		WB	WBT	0	0	75	75	75		75		75			0	75	0	75
	180			WBR	70	0	11	11	80		80		80			0	80	0	80
	180			NBL	0	0	72	72	70		70		70			0	70	0	70
	180		NB	NBT	565	474	471	(3)	560	10	570		570			0	570	0	570
	180			NBR	10	4	0	(4)	5	10	15		15			0	15	0	15
	180			SBL	25	0	0	0	25		25		25			0	25	0	25
	180		SB	SBT	375	187	243	56	430		430		430			0	430	0	430
	180			SBR	0	0	82	82	80		80		80			0	80	0	80
			TEV	**TEV**	**1085**	**669**	**1360**	**691**	**1765**	**30**	**1795**	**0**	**1795**	**0**		**0**	**1795**	**0**	**1795**
29	190	SW River Rd. @ SW Rosedale Rd.		EBL	0	0	0	0	0		0		0			0	0	0	0
	190	2 hr AM Turning Movement Count	EB	EBT	0	0	0	0	0		0		0			0	0	0	0
	190	Count Date: 5/18/2010		EBR	0	0	0	0	0		0		0			0	0	0	0
	190	2010		WBL	15	47	127	80	95		95		95			0	95	0	95
	190		WB	WBT	0	0	0	0	0		0		0			0	0	0	0
	190			WBR	160	214	386	172	330		330		330			0	330	0	330
	190			NBL	0	0	0	0	0		0		0			0	0	0	0
	190		NB	NBT	350	380	523	143	495		495		495			0	495	0	495
	190			NBR	30	120	135	15	45		45		45			0	45	0	45
	190			SBL	55	86	91	5	60		60		60			0	60	0	60
	190		SB	SBT	230	190	245	55	285		285		285			0	285	0	285
	190			SBR	0	0	0	0	0		0		0			0	0	0	0
			TEV	**TEV**	**840**	**1037**	**1507**	**470**	**1310**	**0**	**1310**	**0**	**1310**	**0**		**0**	**1310**	**0**	**1310**
30	200	SW Rosedale Rd. @ SW 229th Ave.		EBL	35	124	73	(51)	35	5	40		40			0	40	0	40
	200	2 hr AM Turning Movement Count	EB	EBT	60	95	164	69	130		130		130			0	130	0	130
	200	Count Date: 5/18/2010		EBR	0	0	0	0	0		0		0			0	0	0	0
	200	2010		WBL	0	0	0	0	0		0		0			0	0	0	0
	200		WB	WBT	165	212	372	160	325		325	(10)	315			0	315	0	315
	200			WBR	105	191	69	(122)	105		105		105			0	105	0	105
	200			NBL	0	0	0	0	0		0		0			0	0	0	0
	200		NB	NBT	0	0	0	0	0		0		0			0	0	0	0
	200			NBR	0	0	0	0	0		0		0			0	0	0	0
	200			SBL	25	71	27	(44)	25		25		25			0	25	0	25
	200		SB	SBT	0	0	0	0	0		0		0			0	0	0	0
	200			SBR	15	47	140	93	110		110		110			0	110	0	110
			TEV	**TEV**	**405**	**740**	**845**	**105**	**730**	**5**	**735**	**(10)**	**725**	**0**		**0**	**725**	**0**	**725**

Project: South Hillsboro Focus Area Plan
Job #: ODOT0000-0737
Subject: *AM Build Turning Movement Volumes*
Created: 6/8/2011
Rev. Date: 3/5/2013

Less than Existing Less than TV Hwy Base

Int No.	Synchro ID	Intersection	Direction	Movement	2011 Existing BALANCED DHV 1-Hr Volume AM Peak	2010 Hillsboro Model Turn Volumes	Jun-12 2035 SoHi Model Turn Volumes w/229th	2035 SoHi - 2010 Turn Vol Diff	2035 SoHi Network Unbalanced	Difference (Volume Adjustment)	2035 SoHi Network Adjusted	Difference (Volume Balancing)	2035 SoHi Network Balanced w/229th	Oct-12 2035 SoHi Network Rerun Turn Vol w/o 229th	Oct-June Difference (Volume Balancing)	2035 Volume Adjustments	June 2035 SoHi Balanced Volumes w/o 229th	Adjusted to SoHi Internal and Surrounding area	Final Combined Volumes
31	210	SW Rosedale Rd. @ Cornelius Pass Rd.		EBL	0	0	48	48	50		50		50			0	50	0	50
	210		EB	EBT	90	177	217	40	130		130		130			0	130	0	130
	210			EBR	0	0	0	0	0		0		0			0	0	0	0
	210			WBL	0	0	0	0	0		0		0			0	0	0	0
	210		WB	WBT	270	404	431	27	295		295	25	320			0	320	0	320
	210			WBR	0	0	187	187	185		185	100	285			0	285	0	285
	210			NBL	0	0	0	0	0		0		0			0	0	0	0
	210		NB	NBT	0	0	0	0	0		0		0			0	0	0	0
	210			NBR	0	0	0	0	0		0		0			0	0	0	0
	210			SBL	0	0	124	124	125		125		125			0	125	0	125
	210		SB	SBT	0	0	0	0	0		0		0			0	0	0	0
	210			SBR	0	0	9	9	10		10		10			0	10	0	10
			TEV	**TEV**	**360**	**581**	**1016**	**435**	**795**	**0**	**795**	**125**	**920**	**0**		**0**	**920**	**0**	**920**
32	220	SW Rosedale Rd. @ SW 209th Ave.		EBL	20	23	15	(8)	10	15	25		25			0	25	0	25
	220	2 hr AM Turning Movement Count	EB	EBT	10	0	0	0	10		10		10			0	10	0	10
	220	Count Date: 5/18/2010		EBR	60	151	340	189	250	(15)	235	(15)	220			0	220	0	220
	220	2010		WBL	5	0	0	0	5		5	45	50			0	50	0	50
	220		WB	WBT	15	0	0	0	15		15		15			0	15	0	15
	220			WBR	15	0	0	0	15		15		15			0	15	0	15
	220			NBL	195	293	521	228	425		425	(5)	420			0	420	0	420
	220		NB	NBT	375	356	645	289	665		665		665			0	665	0	665
	220			NBR	5	0	0	0	5		5		5			0	5	0	5
	220			SBL	15	0	0	0	15		15		15			0	15	0	15
	220		SB	SBT	290	221	415	194	485	(40)	445	40	485			0	485	0	485
	220			SBR	60	109	75	(34)	25	40	65		65			0	65	0	65
			TEV	**TEV**	**1065**	**1153**	**2011**	**858**	**1925**	**0**	**1925**	**65**	**1990**	**0**		**0**	**1990**	**0**	**1990**

Project: South Hillsboro Focus Area Plan
Job #: ODOT0000-0737
Subject: *AM Turning Movement Volumes*
Created: 7/21/2012
Rev. Date: 3/5/2013

	Synchro ID	Intersection	Direction	Movement	2011 Final Balanced Volumes for Synchro - AM Peak	Direction Correctio	2012 UGB						
						2035 Baseline NCHRP 255-Link Unbalanced	2035 Adjusted Volumes	229th Closure Adjustments	Unbalanced Volumes	Volume Balance	Balanced 2035 Baseline Volumes	Adjusted to SoHi Internal and Surrounding area	Final Combined Volumes
2	13	TV Highway @ SE Cypress St.		EBL	45	68	70		70	0	70	50	120
	13	2 hr AM Turning Movement Count	EB	EBT	620	616	620		620	0	620	200	820
	13	Count Date: 5/20/2010		EBR	50	65	65		65	0	65	0	65
	13	2010		WBL	90	114	115		115	0	115	0	115
	13		WB	WBT	675	1,005	1,005		1,005	100	1,105	190	1,295
	13			WBR	45	66	65		65	0	65	0	65
	13			NBL	90	140	150		150	0	150	0	150
	13		NB	NBT	205	314	315		315	0	315	0	315
	13			NBR	140	141	145		145	0	145	0	145
	13			SBL	105	65	105		105	0	105	0	105
	13		SB	SBT	210	171	210		210	0	210	0	210
	13			SBR	45	43	50		50	0	50	0	50
			TEV		**2,320**	**2,809**	**2,915**	**0**	**2,915**	**100**	**3,015**	**440**	**3,455**
3	20	TV Highway @ SE Brookwood Ave.		EBL	75	79	80		80	0	80	0	80
	20	2 hr AM Turning Movement Count	EB	EBT	1,005	921	1,005		1,005	0	1,005	0	1,005
	20	Count Date: 1/30/2008		EBR	55	83	85		85	0	85	0	85
	20	2008		WBL	140	146	160		160	0	160	0	160
	20		WB	WBT	1,100	1,399	1,400		1,400	0	1,400	0	1,400
	20			WBR	165	121	165		165	0	165	0	165
	20			NBL	45	176	175		175	0	175	45	220
	20		NB	NBT	200	450	450		450	0	450	0	450
	20			NBR	175	343	345		345	0	345	0	345
	20			SBL	200	153	200		200	0	200	0	200
	20		SB	SBT	155	195	195		195	0	195	0	195
	20			SBR	105	160	160		160	0	160	0	160
			TEV		**3,420**	**4,226**	**4,420**	**0**	**4,420**	**0**	**4,420**	**45**	**4,465**
4	30	TV Highway @ SE Century Blvd./234th		EBL	65	74	275	25	300	(25)	275	0	275
	30	2 hr AM Turning Movement Count	EB	EBT	1,225	1,084	1,300	(90)	1,210	20	1,230	0	1,230
	30	Count Date: 9/27/2006		EBR	65	40	75		75	90	165	0	165
	30	2006		WBL	75	33	35		35	25	60	0	60
	30		WB	WBT	1,175	1,233	1,400	(70)	1,330	(20)	1,310	0	1,310
	30			WBR	30	24	25	70	95	(70)	25	0	25
	30			NBL	40	223	225	90	315	0	315	0	315
	30		NB	NBT	45	195	195	90	285	0	285	0	285
	30			NBR	85	288	290	110	400	0	400	0	400
	30			SBL	105	120	120		120	(90)	30	0	30
	30		SB	SBT	65	52	50	90	140	0	140	0	140
	30			SBR	95	179	180	(90)	90	90	180	0	180
			TEV		**3,070**	**3,544**	**4,170**	**225**	**4,395**	**20**	**4,415**	**0**	**4,415**
5	40	TV Highway @ SW 67th/229th Ave.		EBL	15	61	60		60	0	60	0	60
	40	2 hr AM Turning Movement Count	EB	EBT	1,280	1,217	1,315	110	1,425	0	1,425	0	1,425
	40	Count Date: 5/20/2010		EBR	60	159	160	(160)	0	0	0	0	0
	40	2010		WBL	75	96	95	(95)	0	0	0	0	0
	40		WB	WBT	1,220	1,165	1,165	75	1,240	0	1,240	0	1,240
	40			WBR	55	108	110		110	0	110	0	110
	40			NBL	40	142	140	(140)	0	0	0	0	0
	40		NB	NBT	25	182	180	(180)	0	0	0	0	0
	40			NBR	65	111	110	(110)	0	0	0	0	0
	40			SBL	80	56	55	50	105	0	105	0	105
	40		SB	SBT	25	49	50	(50)	0	0	0	0	0
	40			SBR	25	36	35		35	0	35	0	35
			TEV		**2,965**	**3,381**	**3,475**	**(500)**	**2,975**	**0**	**2,975**	**0**	**2,975**
6	50	TV Highway @ Cornelius Pass Rd./SW 219th Ave.		EBL	110	174	160		160	0	160	0	160
	50	2 hr AM Turning Movement Count	EB	EBT	1,220	935	1,230		1,230	0	1,230	0	1,230
	50	Count Date: 5/25/2010		EBR	1	138	75	50	125	0	125	0	125
	50	2010		WBL	1	123	200	70	270	0	270	0	270
	50		WB	WBT	1,175	804	1,060	(70)	990	0	990	0	990
	50			WBR	330	467	360		360	0	360	0	360
	50			NBL	1	407	150	50	200	0	200	0	200
	50		NB	NBT	1	843	900	90	990	0	990	0	990
	50			NBR	1	407	300		300	0	300	0	300
	50			SBL	380	383	310		310	0	310	0	310
	50		SB	SBT	1	181	300		300	0	300	0	300
	50			SBR	150	151	200		200	0	200	0	200
			TEV		**3,371**	**5,015**	**5,245**	**190**	**5,435**	**0**	**5,435**	**0**	**5,435**
7	60	TV Highway @ SW 209th Ave./Anthony Dr		EBL	5	7	10		10	0	10	0	10
	60	2 hr AM Turning Movement Count	EB	EBT	1,410	1,550	1,550		1,550	0	1,550	0	1,550
	60	Count Date: 9/30/2009		EBR	255	263	265		265	0	265	0	265
	60	2009		WBL	65	154	155		155	0	155	0	155
	60		WB	WBT	1,270	1,295	1,295		1,295	0	1,295	0	1,295
	60			WBR	15	48	50		50	0	50	0	50
	60			NBL	305	224	225		225	0	225	0	225
	60		NB	NBT	195	449	450		450	0	450	0	450
	60			NBR	90	164	165		165	0	165	0	165
	60			SBL	35	54	55		55	0	55	0	55
	60		SB	SBT	70	101	100		100	0	100	0	100
	60			SBR	25	16	15		15	0	15	0	15
			TEV		**3,740**	**4,325**	**4,335**	**0**	**4,335**	**0**	**4,335**	**0**	**4,335**

Project: South Hillsboro Focus Area Plan
Job #: ODOT0000-0737
Subject: *AM Turning Movement Volumes*
Created: 7/21/2012
Rev. Date: 3/5/2013

	Synchro ID	Intersection	Direction	Movement	2011 Final Balanced Volumes for Synchro - AM Peak	Direction Correctio	2012 UGB						
						2035 Baseline NCHRP 255-Link Unbalanced	2035 Adjusted Volumes	229th Closure Adjustments	Unbalanced Volumes	Volume Balance	Balanced 2035 Baseline Volumes	Adjusted to SoHi Internal and Surrounding area	Final Combined Volumes
8	65	TV Highway @ SW 198th Ave.		EBL	20	48	50		50	0	50	0	50
	65	2 hr AM Turning Movement Count	EB	EBT	1,295	1,488	1,490		1,490	0	1,490	0	1,490
	65	Count Date: 5/20/2010		EBR	150	164	165		165	0	165	0	165
	65	2010		WBL	175	152	175		175	0	175	0	175
	65		WB	WBT	935	1,050	1,050		1,050	0	1,050	0	1,050
	65			WBR	80	152	150		150	0	150	0	150
	65			NBL	270	284	285		285	0	285	0	285
	65		NB	NBT	290	515	515		515	0	515	0	515
	65			NBR	385	328	330		330	0	330	0	330
	65			SBL	180	236	235		235	0	235	0	235
	65		SB	SBT	135	168	170		170	0	170	0	170
	65			SBR	30	49	50		50	0	50	0	50
			TEV		**3,945**	**4,634**	**4,665**	**0**	**4,665**	**0**	**4,665**	**0**	**4,665**
9	66	TV Highway @ SW 185th Ave.		EBL	165	209	210		210	0	210	0	210
	66	2 hr AM Turning Movement Count	EB	EBT	1,535	1,559	1,560		1,560	0	1,560	0	1,560
	66	Count Date: 5/25/2010		EBR	95	170	170		170	0	170	0	170
	66	2010		WBL	95	119	120		120	0	120	0	120
	66		WB	WBT	910	871	970		970	0	970	0	970
	66			WBR	155	137	135		135	0	135	0	135
	66			NBL	180	365	365		365	0	365	0	365
	66		NB	NBT	515	965	1,050		1,050	0	1,050	0	1,050
	66			NBR	135	203	205		205	0	205	0	205
	66			SBL	235	187	185		185	0	185	0	185
	66		SB	SBT	345	484	485		485	0	485	0	485
	66			SBR	125	134	135		135	0	135	0	135
			TEV		**4,490**	**5,404**	**5,590**	**0**	**5,590**	**0**	**5,590**	**0**	**5,590**
11	12	SE River Rd. @ SE Minter Bridge Rd.		EBL	35	26	40		40	0	40	0	40
	12	2 hr AM Turning Movement Count	EB	EBT	230	194	230		230	0	230	0	230
	12	Count Date: 5/24/2011		EBR	135	202	200		200	0	200	0	200
	12	2011		WBL	25	67	65		65	0	65	0	65
	12		WB	WBT	305	527	525		525	0	525	0	525
	12			WBR	150	202	200		200	0	200	0	200
	12			NBL	90	156	155		155	0	155	0	155
	12		NB	NBT	280	377	375		375	0	375	0	375
	12			NBR	45	68	70		70	0	70	0	70
	12			SBL	135	103	135		135	0	135	0	135
	12		SB	SBT	165	223	225		225	0	225	0	225
	12			SBR	25	22	30		30	0	30	0	30
			TEV		**1,620**	**2,168**	**2,250**	**0**	**2,250**	**0**	**2,250**	**0**	**2,250**
33	230	Farmington @ 209th		EBL	115	189	190		190	60	250	0	250
	230		EB	EBT	255	489	490		490	(75)	415	0	415
	230			EBR	10	7	10		10	15	25	0	25
	230			WBL	25	22	25		25	15	40	0	40
	230		WB	WBT	160	215	240		240	70	310	0	310
	230			WBR	160	338	340		340	10	350	0	350
	230			NBL	20	20	25		25	0	25	0	25
	230		NB	NBT	295	459	460		460	(15)	445	0	445
	230			NBR	50	91	100		100	55	155	0	155
	230			SBL	100	339	340		340	50	390	(100)	290
	230		SB	SBT	165	204	205		205	15	220	0	220
	230			SBR	95	176	175		175	(30)	145	0	145
			TEV		**1,450**	**2,547**	**2,600**	**0**	**2,600**	**170**	**2,770**	**(100)**	**2,670**
24-N	48	Kinnaman (north) @ 198th		EBL	0	0	0		0	0	0	195	195
	48		EB	EBT	0	0	0		0	0	0	150	150
	48			EBR	0	0	0		0	0	0	75	75
	48			WBL	35	138	140		140	125	265	(125)	140
	48		WB	WBT	0	0	0		0	0	0	125	125
	48			WBR	200	301	325		325	(50)	275	0	275
	48			NBL	0	0	0		0	0	0	110	110
	48		NB	NBT	625	615	635		635	(115)	520	(195)	325
	48			NBR	145	327	325		325	(30)	295	(150)	145
	48			SBL	145	132	145		145	0	145	0	145
	48		SB	SBT	180	186	185		185	40	225	(100)	125
	48			SBR	0	0	0		0	0	0	100	100
			TEV		**1,330**	**1,700**	**1,755**	**0**	**1,755**	**(30)**	**1,725**	**185**	**1,910**
24-S	240	Kinnaman (south) @ 198th		EBL	70	212	210		210	135	345	(345)	0
	240		EB	EBT	0	0	0		0	0	0	0	0
	240			EBR	50	75	75		75	0	75	(75)	0
	240			WBL	0	0	0		0	0	0	0	0
	240		WB	WBT	0	0	0		0	0	0	0	0
	240			WBR	0	0	0		0	0	0	0	0
	240			NBL	45	107	110		110	0	110	(110)	0
	240		NB	NBT	365	354	365		365	105	470	(470)	0
	240			NBR	0	0	0		0	0	0	0	0
	240			SBL	0	0	0		0	0	0	0	0
	240		SB	SBT	180	169	180		180	85	265	(265)	0
	240			SBR	30	139	140		140	85	225	(225)	0
			TEV		**740**	**1,056**	**1,080**	**0**	**1,080**	**410**	**1,490**	**(1,490)**	**0**

Project: South Hillsboro Focus Area Plan
Job #: ODOT0000-0737
Subject: *AM Turning Movement Volumes*
Created: 7/21/2012
Rev. Date: 3/5/2013

	Synchro ID	Intersection	Direction	Movement	2011 Final Balanced Volumes for Synchro - AM Peak	Direction Correctio	2012 UGB						
						2035 Baseline NCHRP 255-Link Unbalanced	2035 Adjusted Volumes	229th Closure Adjustments	Unbalanced Volumes	Volume Balance	Balanced 2035 Baseline Volumes	Adjusted to SoHi Internal and Surrounding area	Final Combined Volumes
25	49	Kinnaman @ 185th		EBL	135	176	175		175	0	175	0	175
	49		EB	EBT	345	428	430		430	0	430	0	430
	49			EBR	65	91	90		90	0	90	0	90
	49			WBL	75	123	125		125	0	125	0	125
	49		WB	WBT	290	436	435		435	0	435	0	435
	49			WBR	145	222	235		235	0	235	0	235
	49			NBL	85	198	200		200	0	200	0	200
	49		NB	NBT	395	938	940		940	20	960	0	960
	49			NBR	35	79	80		80	0	80	0	80
	49			SBL	90	121	135		135	0	135	0	135
	49		SB	SBT	200	304	315		315	0	315	0	315
	49			SBR	100	139	145		145	0	145	0	145
			TEV		**1,960**	**3,256**	**3,305**	**0**	**3,305**	**20**	**3,325**	**0**	**3,325**
34	235	Farmington @ 198th		EBL	125	189	190		190	15	205	0	205
	235		EB	EBT	440	988	990		990	(75)	915	0	915
	235			EBR	0	0	5		5	0	5	0	5
	235			WBL	0	0	5		5	0	5	0	5
	235		WB	WBT	355	541	540		540	(10)	530	0	530
	235			WBR	140	237	240		240	10	250	0	250
	235			NBL	0	0	5		5	0	5	0	5
	235		NB	NBT	0	0	5		5	0	5	0	5
	235			NBR	0	0	5		5	0	5	0	5
	235			SBL	200	327	325		325	0	325	0	325
	235		SB	SBT	0	0	5		5	0	5	0	5
	235			SBR	80	80	95		95	0	95	0	95
			TEV		**1,340**	**2,362**	**2,410**	**0**	**2,410**	**(60)**	**2,350**	**0**	**2,350**
35	237	Farmington Rd @ 185th		EBL	115	382	380		380	0	380	0	380
	237		EB	EBT	630	1,329	1,330		1,330	(200)	1,130	0	1,130
	237			EBR	105	152	150		150	0	150	0	150
	237			WBL	35	43	45		45	0	45	0	45
	237		WB	WBT	240	466	465		465	0	465	0	465
	237			WBR	30	84	95		95	20	115	0	115
	237			NBL	180	203	205		205	0	205	0	205
	237		NB	NBT	325	529	530		530	170	700	0	700
	237			NBR	120	124	130		130	200	330	0	330
	237			SBL	75	128	130		130	0	130	0	130
	237		SB	SBT	190	223	225		225	0	225	0	225
	237			SBR	80	149	150		150	0	150	0	150
			TEV		**2,125**	**3,813**	**3,835**	**0**	**3,835**	**190**	**4,025**	**0**	**4,025**
10	51	Cornelius Pass Rd @ Johnson St		EBL	20	76	80		80	0	80	0	80
	51		EB	EBT	50	152	150		150	0	150	0	150
	51			EBR	145	170	170		170	0	170	0	170
	51			WBL	250	276	290		290	0	290	0	290
	51		WB	WBT	15	30	65		65	0	65	0	65
	51			WBR	35	125	160		160	0	160	0	160
	51			NBL	85	164	165		165	0	165	0	165
	51		NB	NBT	310	1,071	1,070		1,070	0	1,070	0	1,070
	51			NBR	80	221	220		220	0	220	0	220
	51			SBL	15	39	40		40	0	40	0	40
	51		SB	SBT	295	295	295		295	0	295	0	295
	51			SBR	15	27	40		40	0	40	0	40
			TEV		**1,315**	**2,646**	**2,745**	**0**	**2,745**	**0**	**2,745**	**0**	**2,745**
19-S	62	198th Ave @ Blanton St (South)		EBL	485	580	580		580	(150)	430	(430)	0
	62		EB	EBT	0	0	0		0	0	0	0	0
	62			EBR	150	104	150		150	0	150	(150)	0
	62			WBL	0	0	0		0	0	0	0	0
	62		WB	WBT	0	0	0		0	0	0	0	0
	62			WBR	0	0	0		0	0	0	0	0
	62			NBL	150	117	160		160	0	160	(160)	0
	62		NB	NBT	315	460	460		460	150	610	(610)	0
	62			NBR	0	0	0		0	0	0	0	0
	62			SBL	0	0	0		0	0	0	0	0
	62		SB	SBT	145	185	185		185	5	190	(190)	0
	62			SBR	180	213	215		215	(20)	195	(195)	0
			TEV		**1,425**	**1,659**	**1,750**	**0**	**1,750**	**(15)**	**1,735**	**(1,735)**	**0**
19-N	520	198th Ave @ Blanton St (North)		EBL	0	0	0		0	0	0	235	235
	520		EB	EBT	0	0	0		0	0	0	195	195
	520			EBR	0	0	0		0	0	0	150	150
	520			WBL	50	108	110		110	0	110	(60)	50
	520		WB	WBT	0	0	0		0	0	0	60	60
	520			WBR	255	263	300		300	0	300	0	300
	520			NBL	0	0	0		0	0	0	160	160
	520		NB	NBT	700	858	860		860	(35)	825	(235)	590
	520			NBR	100	216	215		215	0	215	(195)	20
	520			SBL	280	240	280		280	0	280	0	280
	520		SB	SBT	255	261	275		275	0	275	(135)	140
	520			SBR	0	0	0		0	0	0	135	135
			TEV		**1,640**	**1,947**	**2,040**	**0**	**2,040**	**(35)**	**2,005**	**310**	**2,315**

Project: South Hillsboro Focus Area Plan
Job #: ODOT0000-0737
Subject: ***AM Turning Movement Volumes***
Created: 7/21/2012
Rev. Date: 3/5/2013

Synchro ID		Intersection	Direction	Movement	2011 Final Balanced Volumes for Synchro - AM Peak	Direction Correctio	2012 UGB						
						2035 Baseline NCHRP 255-Link Unbalanced	2035 Adjusted Volumes	229th Closure Adjustments	Unbalanced Volumes	Volume Balance	Balanced 2035 Baseline Volumes	Adjusted to SoHi Internal and Surrounding area	Final Combined Volumes
20-S	66	185th Ave @ Blanton (South)		EBL	0	0	0		0	0	0	260	260
	66		EB	EBT	0	0	0		0	0	0	90	90
	66			EBR	0	0	0		0	0	0	40	40
	66			WBL	60	77	75		75	0	75	0	75
	66		WB	WBT	0	0	0		0	0	0	35	35
	66			WBR	155	229	230		230	0	230	(35)	195
	66			NBL	0	0	0		0	0	0	140	140
	66		NB	NBT	685	1,282	1,330		1,330	(25)	1,305	(140)	1,165
	66			NBR	135	219	220		220	0	220	0	220
	66			SBL	130	186	185		185	(20)	165	(90)	75
	66		SB	SBT	430	613	650		650	(10)	640	(40)	600
	66			SBR	0	0	0		0	0	0	100	100
			TEV		**1,595**	**2,606**	**2,690**	**0**	**2,690**	**(55)**	**2,635**	**360**	**2,995**
20-N	37	185th Ave @ Blanton (North)		EBL	225	259	260		260	0	260	(260)	0
	37		EB	EBT	0	0	0		0	0	0	0	0
	37			EBR	90	128	130		130	0	130	(130)	0
	37			WBL	0	0	0		0	0	0	0	0
	37		WB	WBT	0	0	0		0	0	0	0	0
	37			WBR	0	0	0		0	0	0	0	0
	37			NBL	110	178	180		180	(5)	175	(175)	0
	37		NB	NBT	640	1,291	1,290		1,290	(90)	1,200	(1,200)	0
	37			NBR	0	0	0		0	0	0	0	0
	37			SBL	0	0	0		0	0	0	0	0
	37		SB	SBT	460	699	700		700	(25)	675	(675)	0
	37			SBR	110	109	125		125	(25)	100	(100)	0
			TEV		**1,635**	**2,663**	**2,685**	**0**	**2,685**	**(145)**	**2,540**	**(2,540)**	**0**

Project: South Hillsboro Focus Area Plan
Job #: ODOT0000-0737
Subject: **AM Turning Movement Volumes**
Created: 7/21/2012
Rev. Date: 3/5/2013

Table 2: 2035 Link Volume Calculations for the AM Peak Period

Road	From	To	Direction	Volumes 2011	Model 2010	Interpolated Model 2011	Model 2035	2011-2035 Model Comparison: Annual Growth	Total Growth	Volume Difference	2035 Volume Estimates: Difference Volume	Growth Volume	Absolute Difference	Average	Forecast Used	Method Used	Comments
River Road	South of TV Hwy	TV Hwy	NB	400	592	604	889	2.0%	48.2%	285	685	593	14%	639	**685**	Difference Method	Absolute difference >10% --> Used difference only
	TV Hwy	South of TV Hwy	SB	435	258	258	261	0.0%	1.1%	3	438	440	0%	439	**438**	Difference Method	To be consistent with method used for opposing direction
	TV Hwy	North of TV Hwy	NB	235	168	176	375	4.9%	118.3%	199	434	513	17%	473	**434**	Difference Method	Absolute difference >10% --> Used difference only
	North of TV Hwy	TV Hwy	SB	150	54	54	46	-0.6%	-14.2%	-8	142	129	10%	135	**142**	Difference Method	Absolute difference >10% --> Used difference only
Minter Bridge@Cypress	South of River Road	River Road	NB	415	343	350	525	2.1%	50.9%	175	590	626	6%	608	**608**	Average of Difference and Growth	
	River Road	South of River Road	SB	325	263	269	419	2.4%	56.9%	150	475	510	7%	492	**492**	Average of Difference and Growth	
	River Road	South of TV Hwy	NB	465	475	481	623	1.2%	29.9%	142	607	604	0%	606	**606**	Average of Difference and Growth	
	TV Hwy	River Road	SB	325	283	284	308	0.4%	8.5%	24	349	353	1%	351	**351**	Average of Difference and Growth	
	TV Hwy	North of TV Hwy	NB	295	537	545	743	1.5%	36.8%	198	493	404	20%	448	**448**	Average of Difference and Growth	
	North of TV Hwy	TV Hwy	SB	360	384	381	303	-0.8%	-20.3%	-78	282	287	2%	285	**285**	Average of Difference and Growth	
Brookwood Blvd	Witch Hazel	TV Hwy	NB	420	505	528	1078	4.5%	108.9%	550	970	877	10%	924	**970**	Difference Method	Absolute difference >10% --> Used difference only
	TV Hwy	Witch Hazel	SB	350	369	372	446	0.8%	20.0%	74	424	420	1%	422	**424**	Difference Method	To be consistent with method used for opposing direction
	TV Hwy	Frewing	NB	440	592	602	843	1.7%	40.7%	241	681	619	10%	650	**650**	Average of Difference and Growth	
	Frewing	TV Hwy	SB	460	456	458	505	0.4%	10.3%	47	507	507	0%	507	**507**	Average of Difference and Growth	
Century/234th Ave	Alexander	TV Hwy	NB	260	269	289	771	7.5%	179.2%	482	742	726	2%	734	**734**	Average of Difference and Growth	
	TV Hwy	Alexander	SB	125	88	88	88	0.0%	0.0%	0	125	125	0%	125	**125**	Average of Difference and Growth	
	TV Hwy	Johnson	NB	140	434	440	593	1.5%	35.2%	153	293	189	43%	241	**293**	Difference Method	Absolute difference >10% --> Used difference only
	Johnson	TV Hwy	SB	265	250	254	353	1.6%	39.6%	99	364	370	2%	367	**364**	Difference Method	To be consistent with method used for opposing direction
229th/67th	Alexander	TV Hwy	NB	130	257	269	569	4.9%	116.5%	300	430	282	42%	356	**430**	Difference Method	Absolute difference >10% --> Used difference only
	TV Hwy	Alexander	SB	160	290	296	439	2.1%	49.3%	143	303	239	24%	271	**303**	Difference Method	Absolute difference >10% --> Used difference only
	TV Hwy	Johnson	NB	95	68	79	335	15.7%	376.9%	256	351	453	25%	402	**351**	Difference Method	Absolute difference >10% --> Used difference only
	Johnson	TV Hwy	SB	130	29	29	39	1.4%	33.1%	10	140	173	21%	156	**140**	Difference Method	Absolute difference >10% --> Used difference only
Cornelius Pass	TV Hwy	Johnson	NB	475	524	566	1575	8.0%	192.5%	1009	1484	1390	7%	1437	**1484**	Difference Method	To be consistent with method used for opposing direction
	Johnson	TV Hwy	SB	690	559	561	612	0.4%	9.1%	51	741	753	2%	747	**741**	Difference Method	To be consistent with method used for opposing direction
	Johnson	North of Johnson	NB	365	525	563	1470	7.2%	172.8%	907	1272	996	24%	1134	**1272**	Difference Method	Absolute difference >10% --> Used difference only
	North of Johnson	Johnson	SB	325	519	521	565	0.4%	8.5%	44	369	353	5%	361	**369**	Difference Method	To be consistent with method used for opposing direction
209th Ave	South of Farmington	Farmington	NB	365	434	443	662	2.1%	50.4%	219	584	549	6%	566	**566**	Average of Difference and Growth	
	Farmington	South of Farmington	SB	200	328	330	371	0.5%	12.6%	41	241	225	7%	233	**233**	Average of Difference and Growth	
	Farmington	Rosedale	NB	570	654	671	1086	2.6%	63.4%	415	985	931	6%	958	**985**	Difference Method	To be consistent with method used for opposing direction
	Rosedale	Farmington	SB	360	277	292	646	5.3%	127.9%	354	714	820	14%	767	**714**	Difference Method	Absolute difference >10% --> Used difference only
	Blanton	TV Hwy	NB	590	599	609	858	1.7%	41.5%	249	839	835	0%	837	**837**	Average of Difference and Growth	
	TV Hwy	Blanton	SB	390	337	342	461	1.5%	35.3%	119	509	528	4%	518	**518**	Average of Difference and Growth	
	TV Hwy	Alexander	NB	215	426	438	727	2.8%	67.8%	289	504	361	33%	432	**504**	Difference Method	To be consistent with method used for opposing direction
	Alexander	TV Hwy	SB	130	246	248	287	0.7%	16.0%	39	169	151	12%	160	**169**	Difference Method	Absolute difference >10% --> Used difference only
198th Ave	Farmington	North of Farmington	NB	265	330	337	498	2.0%	48.9%	161	426	395	8%	410	**426**	Difference Method	To be consistent with method used for opposing direction
	North of Farmington	Farmington	SB	280	428	433	564	1.3%	30.5%	131	411	365	12%	388	**411**	Difference Method	Absolute difference >10% --> Used difference only
	South of Kinnaman (south)	Kinnaman (south)	NB	410	488	491	556	0.6%	13.4%	65	475	465	2%	470	**475**	Difference Method	
	Kinnaman (south)	South of Kinnaman (south)	SB	230	110	111	125	0.5%	13.1%	14	244	260	6%	252	**244**	Difference Method	
	Kinnaman (south)	North of Kinnaman (south)	NB	435	621	627	781	1.0%	24.7%	154	589	543	8%	566	**566**	Average of Difference and Growth	
	North of Kinnaman (south)	Kinnaman (south)	SB	210	168	172	268	2.4%	57.1%	96	306	330	8%	318	**318**	Average of Difference and Growth	
	South of Kinnaman (north)	Kinnaman (north)	NB	770	621	627	781	1.0%	24.7%	154	924	960	4%	942	**942**	Average of Difference and Growth	
	Kinnaman (north)	South of Kinnaman (north)	SB	215	168	172	268	2.4%	57.1%	96	311	338	8%	324	**324**	Average of Difference and Growth	
	Kinnaman (north)	North of Kinnaman (north)	NB	825	774	778	866	0.5%	11.4%	88	913	919	1%	916	**916**	Average of Difference and Growth	
	North of Kinnaman (north)	Kinnaman (north)	SB	325	239	239	233	-0.1%	-2.4%	-6	319	317	1%	318	**318**	Average of Difference and Growth	
	South of Blanton (south)	Blanton (south)	NB	465	774	778	866	0.5%	11.4%	88	553	518	7%	536	**536**	Average of Difference and Growth	
	Blanton (south)	South of Blanton (south)	SB	295	239	239	233	-0.1%	-2.4%	-6	289	288	0%	289	**289**	Average of Difference and Growth	
	Blanton (south)	Blanton (north)	NB	800	687	696	918	1.3%	32.3%	222	1022	1058	4%	1040	**1040**	Average of Difference and Growth	
	Blanton (north)	Blanton (south)	SB	325	389	391	439	0.5%	12.3%	48	373	365	2%	369	**369**	Average of Difference and Growth	
	Blanton (north)	TV Hwy	NB	945	524	531	708	1.4%	33.7%	177	1122	1264	12%	1193	**1122**	Difference Method	Absolute difference >10% --> Used difference only
	TV Hwy	Blanton (north)	SB	460	398	399	423	0.3%	6.0%	24	484	488	1%	486	**484**	Difference Method	To be consistent with method used for opposing direction
	TV Hwy	Alexander	NB	390	383	396	718	3.5%	84.0%	322	712	717	1%	715	**715**	Average of Difference and Growth	
	Alexander	TV Hwy	SB	345	350	354	461	1.3%	30.4%	107	452	450	0%	451	**451**	Average of Difference and Growth	
Farmington Rd	West of 209th	209th	EB	380	438	451	774	3.1%	73.6%	323	703	660	6%	681	**681**	Average of Difference and Growth	
	209th	East of 209th	EB	405	349	370	884	6.1%	147.2%	514	919	1001	9%	960	**919**	Difference Method	To be consistent with method used for opposing direction
	East of 209th	209th	WB	345	535	544	772	1.8%	42.5%	228	573	492	15%	532	**573**	Difference Method	
	209th	West of 209th	WB	275	353	359	512	1.8%	43.2%	153	428	394	8%	411	**411**	Average of Difference and Growth	
	West of 198th	198th	EB	565	558	584	1203	4.6%	111.0%	619	1184	1192	1%	1188	**1188**	Average of Difference and Growth	
	198th	East of 198th	EB	640	678	707	1402	4.3%	102.5%	695	1335	1296	3%	1316	**1316**	Average of Difference and Growth	
	East of 198th	198th	WB	495	562	575	886	2.3%	55.3%	311	806	769	5%	787	**787**	Average of Difference and Growth	
	198th	West of 198th	WB	435	539	548	753	1.6%	38.1%	205	640	601	6%	621	**621**	Average of Difference and Growth	
	West of 185th	185th	EB	850	717	757	1723	5.6%	134.7%	966	1816	1995	9%	1905	**1905**	Average of Difference and Growth	
	185th	East of 185th	EB	825	655	687	1443	4.8%	115.5%	756	1581	1778	12%	1680	**1581**	Difference Method	Absolute difference >10% --> Used difference only
	East of 185th	185th	WB	305	424	437	738	3.0%	71.1%	301	606	522	15%	564	**606**	Difference Method	Absolute difference >10% --> Used difference only
	185th	West of 185th	WB	500	508	521	840	2.6%	62.7%	319	819	814	1%	816	**819**	Difference Method	To be consistent with method used for opposing direction

Project: South Hillsboro Focus Area Plan
Job #: ODOT0000-0737
Subject: **AM Turning Movement Volumes**
Created: 7/21/2012
Rev. Date: 3/5/2013

Table 2: 2035 Link Volume Calculations for the AM Peak Period

				Volumes	Model	Interpolated Model	Model	2011-2035 Model Comparison			2035 Volume Estimates						
Road	From	To	Direction	2011	2010	2011	2035	Annual Growth	Total Growth	Volume Difference	Difference Volume	Growth Volume	Absolute Difference	Average	Forecast Used	Method Used	Comments
185th Ave	South of Farmington	Farmington	NB	625	711	722	989	1.6%	37.5%	267	892	860	4%	876	**876**	Average of Difference and Growth	
	Farmington	South of Farmington	SB	330	371	375	467	1.0%	24.8%	92	422	412	2%	417	**417**	Average of Difference and Growth	
	Farmington	Rosa	NB	470	630	652	1178	3.5%	83.5%	526	996	862	14%	929	**996**	Difference Method	
	Rosa	Farmington	SB	345	312	319	477	2.1%	50.8%	158	503	520	3%	512	**512**	Average of Difference and Growth	
	South of Kinnaman	Kinnaman	NB	515	675	704	1408	4.3%	104.2%	704	1219	1052	15%	1135	**1219**	Difference Method	
	Kinnaman	South of Kinnaman	SB	340	316	323	495	2.3%	54.4%	172	512	525	3%	518	**518**	Average of Difference and Growth	
	Kinnaman	North of Kinnaman	NB	675	743	772	1465	3.9%	93.3%	693	1368	1305	5%	1336	**1336**	Average of Difference and Growth	
	North of Kinnaman	Kinnaman	SB	390	363	370	540	2.0%	46.8%	170	560	573	2%	566	**566**	Average of Difference and Growth	
	South of Blanton (south)	Blanton (south)	NB	820	743	772	1465	3.9%	93.3%	693	1513	1585	5%	1549	**1549**	Average of Difference and Growth	
	Blanton (south)	South of Blanton (south)	SB	490	363	370	540	2.0%	46.8%	170	660	719	9%	690	**690**	Average of Difference and Growth	
	Blanton (south)	Blanton (north)	NB	750	713	745	1506	4.4%	106.8%	761	1511	1551	3%	1531	**1511**	Difference Method	To be consistent with method used for opposing direction
	Blanton (north)	Blanton (south)	SB	550	409	421	697	2.8%	67.6%	276	826	922	11%	874	**826**	Difference Method	Absolute difference >10% --> Used difference only
	Blanton (north)	N of Blanton (north)	NB	865	991	1021	1753	3.1%	73.8%	732	1597	1504	6%	1550	**1550**	Average of Difference and Growth	
	N of Blanton (north)	Blanton (north)	SB	570	487	497	735	2.0%	48.9%	238	808	849	5%	828	**828**	Average of Difference and Growth	
	S of TV Hwy	TV Hwy	NB	830	991	1021	1753	3.1%	73.8%	732	1562	1443	8%	1502	**1562**	Difference Method	To be consistent with method used for opposing direction
	TV Hwy	S of TV Hwy	SB	535	487	497	735	2.0%	48.9%	238	773	797	3%	785	**773**	Difference Method	To be consistent with method used for opposing direction
	TV Hwy	Alexander	NB	835	1269	1289	1765	1.6%	37.5%	476	1311	1148	13%	1230	**1311**	Difference Method	Absolute difference >10% --> Used difference only
	Alexander	TV Hwy	SB	705	995	1000	1116	0.5%	11.7%	116	821	787	4%	804	**821**	Difference Method	To be consistent with method used for opposing direction
Kinnaman (south)	West of 198th	198th	EB	120	158	165	341	4.6%	111.2%	176	296	253	15%	275	**296**	Difference Method	Absolute difference >10% --> Used difference only
	198th	West of 198th	WB	75	82	89	260	8.7%	208.4%	171	246	231	6%	239	**246**	Difference Method	To be consistent with method used for opposing direction
Kinnaman (north)	East of 198th	198th	WB	235	320	329	533	2.7%	63.9%	204	439	385	13%	412	**439**	Difference Method	Absolute difference >10% --> Used difference only
	198th	East of 198th	EB	290	237	244	413	3.0%	71.3%	169	459	497	8%	478	**459**	Difference Method	To be consistent with method used for opposing direction
Kinnaman	West of 185th	185th	EB	545	318	324	477	2.0%	48.0%	153	698	807	14%	752	**698**	Difference Method	Absolute difference >10% --> Used difference only
	185th	West of 185th	WB	530	396	406	649	2.6%	61.3%	243	773	855	10%	814	**773**	Difference Method	Absolute difference >10% --> Used difference only
	185th	East of 185th	EB	470	298	305	463	2.2%	53.2%	158	628	720	14%	674	**628**	Difference Method	Absolute difference >10% --> Used difference only
	East of 185th	185th	WB	510	397	407	647	2.5%	60.5%	240	750	818	9%	784	**784**	Average of Difference and Growth	
Johnson St	West of Cornelius pass	Cornelius Pass	EB	215	123	131	323	6.5%	156.1%	192	407	551	30%	479	**407**	Difference Method	Absolute difference >10% --> Used difference only
	Cornelius Pass	West of Cornelius pass	WB	115	94	98	204	4.7%	112.3%	106	221	244	10%	232	**221**	Difference Method	Absolute difference >10% --> Used difference only
	Cornelius Pass	East of Cornelius Pass	EB	145	82	93	360	13.6%	325.5%	267	412	617	40%	514	**412**	Difference Method	Absolute difference >10% --> Used difference only
	East of Cornelius Pass	Cornelius Pass	WB	300	194	200	341	3.0%	72.7%	141	441	518	16%	480	**441**	Difference Method	Absolute difference >10% --> Used difference only
TV Highway	River Road	Cypress/Minter Br	EB	715	727	729	779	0.3%	6.9%	50	765	764	0%	765	**765**	Average of Difference and Growth	
	Cypress/Minter Br	River Road	WB	810	875	891	1284	1.9%	44.9%	393	1203	1173	2%	1188	**1188**	Average of Difference and Growth	
	Cypress/Minter Br	E of Cypress/Minter Br	EB	865	981	979	933	-0.2%	-4.7%	-46	819	824	1%	822	**822**	Average of Difference and Growth	
	E of Cypress/Minter Br	Cypress/Minter Br	WB	810	1091	1110	1562	1.7%	41.4%	452	1262	1146	10%	1204	**1204**	Average of Difference and Growth	
	W of Brookwood Blvd	Brookwood Blvd	EB	1135	981	979	933	-0.2%	-4.7%	-46	1089	1082	1%	1085	**1085**	Average of Difference and Growth	
	Brookwood Blvd	W of Brookwood Blvd	WB	1250	1091	1110	1562	1.7%	41.4%	452	1702	1768	4%	1735	**1735**	Average of Difference and Growth	
	Brookwood Blvd	E of Brookwood	EB	1380	1216	1217	1252	0.1%	2.8%	35	1415	1419	0%	1417	**1417**	Average of Difference and Growth	
	E of Brookwood	Brookwood Blvd	WB	1405	1326	1336	1586	0.8%	18.8%	250	1655	1669	1%	1662	**1662**	Average of Difference and Growth	
	W of Century/234th	Century/234th	EB	1355	1199	1195	1096	-0.3%	-8.2%	-99	1256	1243	1%	1250	**1250**	Average of Difference and Growth	
	Century/234th	W of Century/234th	WB	1310	1248	1261	1578	1.1%	25.4%	317	1627	1643	1%	1635	**1635**	Average of Difference and Growth	
	Century/234th	E of Century/234th	EB	1415	1317	1320	1394	0.2%	5.6%	74	1489	1494	0%	1492	**1492**	Average of Difference and Growth	
	E of Century/234th	Century/234th	WB	1280	1369	1372	1432	0.2%	4.4%	60	1340	1337	0%	1339	**1339**	Average of Difference and Growth	
	W of 229th/67th	229th/67th	EB	1355	1317	1320	1394	0.2%	5.6%	74	1429	1431	0%	1430	**1430**	Average of Difference and Growth	
	229th/67th	W of 229th/67th	WB	1285	1369	1372	1432	0.2%	4.4%	60	1345	1342	0%	1344	**1344**	Average of Difference and Growth	
	229th/67th	E of 229th/67th	EB	1425	1333	1331	1291	-0.1%	-3.0%	-40	1385	1382	0%	1383	**1383**	Average of Difference and Growth	
	E of 229th/67th	229th/67th	WB	1350	1456	1458	1496	0.1%	2.6%	38	1388	1386	0%	1387	**1387**	Average of Difference and Growth	
	W of Corn Pass	Cornelius Pass	EB	1331	1333	1331	1291	-0.1%	-3.0%	-40	1291	1291	0%	1291	**1291**	Average of Difference and Growth	
	Cornelius Pass	W of Corn Pass	WB	1326	1456	1458	1496	0.1%	2.6%	38	1364	1361	0%	1363	**1363**	Average of Difference and Growth	
	Cornelius Pass	E fo Cornelius pass	EB	1601	1500	1505	1626	0.3%	8.1%	121	1722	1730	0%	1726	**1726**	Average of Difference and Growth	
	E fo Cornelius pass	Cornelius Pass	WB	1506	1589	1586	1521	-0.2%	-4.1%	-65	1441	1444	0%	1442	**1442**	Average of Difference and Growth	
	W of 209th	209th	EB	1670	1500	1505	1626	0.3%	8.1%	121	1791	1805	1%	1798	**1798**	Average of Difference and Growth	
	209th	W of 209th	WB	1600	1589	1586	1521	-0.2%	-4.1%	-65	1535	1534	0%	1534	**1534**	Average of Difference and Growth	
	209th	E of 209th	EB	1535	1396	1405	1627	0.7%	15.9%	222	1757	1779	1%	1768	**1768**	Average of Difference and Growth	
	E of 209th	209th	WB	1350	1402	1409	1566	0.5%	11.2%	157	1507	1502	0%	1505	**1505**	Average of Difference and Growth	
	W of 198th	198th	EB	1465	1396	1405	1627	0.7%	15.9%	222	1687	1698	1%	1692	**1692**	Average of Difference and Growth	
	198th	W of 198th	WB	1235	1402	1409	1566	0.5%	11.2%	157	1392	1374	1%	1383	**1383**	Average of Difference and Growth	
	198th	E of 198th	EB	1860	1631	1638	1818	0.5%	11.0%	180	2040	2065	1%	2052	**2052**	Average of Difference and Growth	
	E of 198th	198th	WB	1190	1545	1552	1728	0.5%	11.4%	176	1366	1325	3%	1345	**1345**	Average of Difference and Growth	
	W of 185th	185th	EB	1795	1640	1647	1818	0.4%	10.4%	171	1966	1982	1%	1974	**1974**	Average of Difference and Growth	
	185th	W of 185th	WB	1215	1547	1554	1728	0.5%	11.2%	174	1389	1351	3%	1370	**1370**	Average of Difference and Growth	
	185th	E of 185th	EB	1905	1905	1907	1951	0.1%	2.3%	44	1949	1949	0%	1949	**1949**	Average of Difference and Growth	
	E of 185th	185th	WB	1160	1658	1657	1643	0.0%	-0.9%	-14	1146	1150	0%	1148	**1148**	Average of Difference and Growth	

Project: South Hillsboro Focus Area Plan
Job #: ODOT0000-0737
Subject: **AM Turning Movement Volumes**
Created: 7/21/2012
Rev. Date: 3/5/2013

Table 2: 2035 Link Volume Calculations for the AM Peak Period

Road	From	To	Direction	Volumes 2011	Model 2010	Interpolated Model 2011	Model 2035	2011-2035 Model Comparison: Annual Growth	Total Growth	Volume Difference	2035 Volume Estimates: Difference Volume	Growth Volume	Absolute Difference	Average	Forecast Used	Method Used	Comments
River Road	W of Minter Br	Minter Br	EB	400	299	300	322	0.3%	7.4%	22	422	430	2%	426	**426**	Average of Difference and Growth	
	Minter Br	W of Minter Br	WB	420	463	475	774	2.7%	64.5%	299	719	691	4%	705	**705**	Average of Difference and Growth	
	Minter Br	E fo Minter Br	EB	410	178	176	131	-1.1%	-25.3%	-45	365	306	18%	335	**365**	Difference Method	Absolute difference >10% --> Used difference only
	E fo Minter Br	Minter Br	WB	480	454	468	793	3.0%	71.7%	325	805	824	2%	815	**805**	Difference Method	To be consistent with method used for opposing direction
Blanton (south)	209th	198th	EB	635	635	621	286	-2.2%	-52.8%	-335	300	300	0%	300	**635**	manual	Road already present although not in 2010 model
	198th	209th	WB	330	330	323	163	-2.0%	-48.6%	-160	170	170	0%	170	**330**	manual	volume not in 2035 model
	185th	E of 185th	EB	265	156	162	302	3.7%	89.8%	140	405	503	22%	454	**405**	Difference Method	Absolute difference >10% --> Used difference only
	E of 185th	185th	WB	215	80	84	185	5.3%	126.0%	101	316	486	42%	401	**316**	Difference Method	Absolute difference >10% --> Used difference only
Blanton (north)	198th	E of 198th	EB	380	221	224	300	1.4%	34.3%	76	456	510	11%	483	**456**	Difference Method	Absolute difference >10% --> Used difference only
	E of 198th	198th	WB	305	49	51	106	4.7%	111.7%	55	360	646	57%	503	**360**	Difference Method	Absolute difference >10% --> Used difference only
	W of 185th	185th	EB	315	269	272	355	1.3%	30.7%	83	398	412	3%	405	**398**	Difference Method	To be consistent with method used for opposing direction
	185th	W of 185th	WB	220	56	59	125	4.9%	118.3%	66	286	480	51%	383	**286**	Difference Method	Absolute difference >10% --> Used difference only

Intersection does not currently exist

Greater than 10% difference between difference and growth methods

Insert data into cells with blue font : HEADER INFO, BASE YEAR TURN MOVEMENTS, FUTURE YEAR LINK VOLUMES

OUTPUT DATA IS IN BOLD PRINT.

INTERSECTION :	TV Hwy @ Cypress/Minter Bridge		
SCENARIO :	2035 with 2012 UGB Buildout - With South Hillsboro		
PEAK HOUR :	AM		
BASE YEAR :	2011	EAST-WEST ROAD:	TV Hwy
FUTURE YEAR :	2035	NORTH-SOUTH ROAD:	Cypress/Minter Bridge

	PEAK HOUR TURNING MOVEMENTS											
	NORTHBOUND			SOUTHBOUND			EASTBOUND			WESTBOUND		
YEAR	Left	Thru	Right	Left	Thru	Right	Left	Thru	Right	Left	Thru	Right
BASE YEAR	90	205	140	105	210	45	45	620	50	90	675	45
OUTPUT FUTURE	**140**	**314**	**141**	**65**	**171**	**43**	**68**	**616**	**65**	**114**	**1,005**	**66**

	PEAK HOUR DIRECTIONAL LINK VOLUMES									
	SOUTHLEG		NORTHLEG		WESTLEG		EASTLEG		ALL LEGS	
YEAR	In	Out	In	Out	In	Out	In	Out	In	Out
BASE YEAR	435	350	360	295	715	810	810	865	2,320	2,320
OUTPUT FUTURE	**595**	**351**	**280**	**448**	**750**	**1,188**	**1,185**	**822**	2,809	2,809
INPUT FUTURE	606	351	285	448	765	1,188	1,204	822	2,859	2,809
									-50.01	

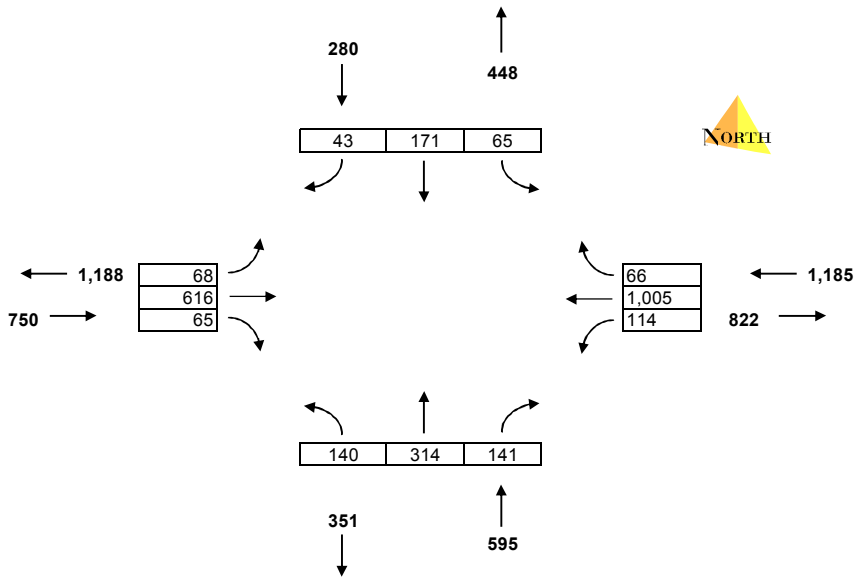

* Turn Calculation Output from NCHRP 255

Insert data into cells with blue font : HEADER INFO, BASE YEAR TURN MOVEMENTS, FUTURE YEAR LINK VOLUMES

OUTPUT DATA IS IN BOLD PRINT.

INTERSECTION :	TV Hwy @ Brookwood		
SCENARIO :	2035 with 2012 UGB Buildout - With South Hillsboro		
PEAK HOUR :	AM		
BASE YEAR :	2011	EAST-WEST ROAD:	TV Hwy
FUTURE YEAR :	2035	NORTH-SOUTH ROAD:	Brookwood

	PEAK HOUR TURNING MOVEMENTS											
	NORTHBOUND			SOUTHBOUND			EASTBOUND			WESTBOUND		
YEAR	Left	Thru	Right	Left	Thru	Right	Left	Thru	Right	Left	Thru	Right
BASE YEAR	45	200	175	200	155	105	75	1,005	55	140	1,100	165
OUTPUT FUTURE	**176**	**450**	**343**	**153**	**195**	**160**	**79**	**921**	**83**	**146**	**1,399**	**121**

	PEAK HOUR DIRECTIONAL LINK VOLUMES									
	SOUTHLEG		NORTHLEG		WESTLEG		EASTLEG		ALL LEGS	
YEAR	In	Out	In	Out	In	Out	In	Out	In	Out
BASE YEAR	420	350	460	440	1,135	1,250	1,405	1,380	3,420	3,420
OUTPUT FUTURE	**970**	**424**	**507**	**650**	**1,083**	**1,735**	**1,666**	**1,417**	4,226	4,226
INPUT FUTURE	970	424	507	650	1,085	1,735	1,662	1,417	4,225	4,226
										1.28

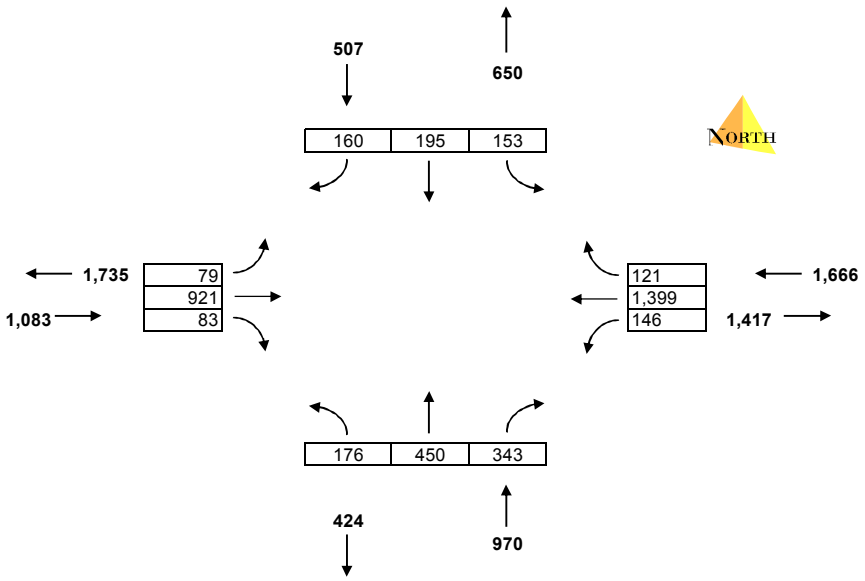

* Turn Calculation Output from NCHRP 255

Insert data into cells with blue font : HEADER INFO, BASE YEAR TURN MOVEMENTS, FUTURE YEAR LINK VOLUMES

OUTPUT DATA IS IN BOLD PRINT.

INTERSECTION :	TV Hwy @ Century Dr/234th		
SCENARIO :	2035 with 2012 UGB Buildout - With South Hillsboro		
PEAK HOUR :	AM		
BASE YEAR :	2011	EAST-WEST ROAD:	TV Hwy
FUTURE YEAR :	2035	NORTH-SOUTH ROAD:	Century Drve/234th

	PEAK HOUR TURNING MOVEMENTS											
	NORTHBOUND			SOUTHBOUND			EASTBOUND			WESTBOUND		
YEAR	Left	Thru	Right	Left	Thru	Right	Left	Thru	Right	Left	Thru	Right
BASE YEAR	40	45	85	105	65	95	65	1,225	65	75	1,175	30
OUTPUT FUTURE	**223**	**195**	**288**	**120**	**52**	**179**	**74**	**1,084**	**40**	**33**	**1,233**	**24**

	PEAK HOUR DIRECTIONAL LINK VOLUMES									
	SOUTHLEG		NORTHLEG		WESTLEG		EASTLEG		ALL LEGS	
YEAR	In	Out	In	Out	In	Out	In	Out	In	Out
BASE YEAR	170	205	265	140	1,355	1,310	1,280	1,415	3,070	3,070
OUTPUT FUTURE	**705**	**125**	**350**	**293**	**1,198**	**1,635**	**1,291**	**1,492**	3,544	3,544
INPUT FUTURE	734	125	364	293	1,250	1,635	1,339	1,492	3,686	3,544

-142

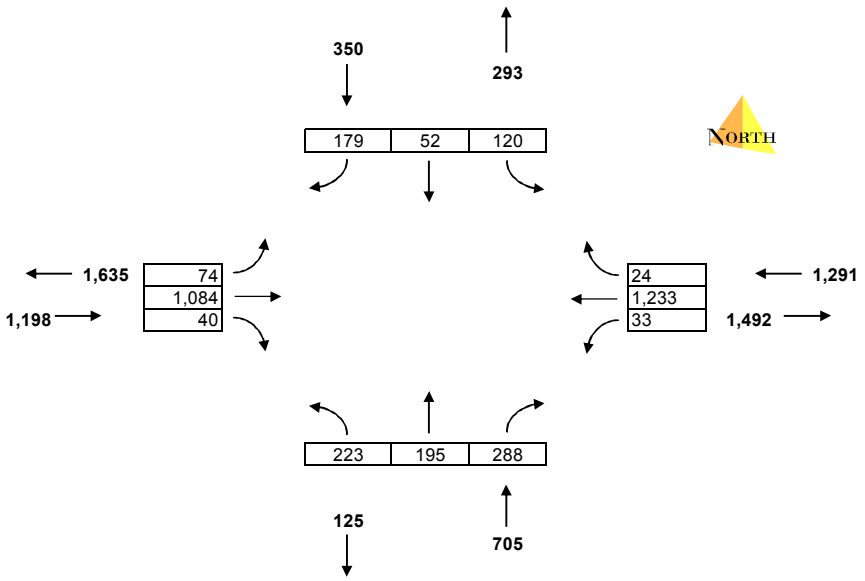

* Turn Calculation Output from NCHRP 255

Insert data into cells with blue font : HEADER INFO, BASE YEAR TURN MOVEMENTS, FUTURE YEAR LINK VOLUMES

OUTPUT DATA IS IN BOLD PRINT.

INTERSECTION :	TV Hwy @ 229th		
SCENARIO :	2035 with 2012 UGB Buildout - With South Hillsboro		
PEAK HOUR :	AM		
BASE YEAR :	2011	EAST-WEST ROAD:	TV Hwy
FUTURE YEAR :	2035	NORTH-SOUTH ROAD:	229th

	PEAK HOUR TURNING MOVEMENTS											
	NORTHBOUND			SOUTHBOUND			EASTBOUND			WESTBOUND		
YEAR	Left	Thru	Right	Left	Thru	Right	Left	Thru	Right	Left	Thru	Right
BASE YEAR	40	25	65	80	25	25	15	1,280	60	75	1,220	55
OUTPUT FUTURE	**142**	**182**	**111**	**56**	**49**	**36**	**61**	**1,217**	**159**	**96**	**1,165**	**108**

	PEAK HOUR DIRECTIONAL LINK VOLUMES									
	SOUTHLEG		NORTHLEG		WESTLEG		EASTLEG		ALL LEGS	
YEAR	In	Out	In	Out	In	Out	In	Out	In	Out
BASE YEAR	130	160	130	95	1,355	1,285	1,350	1,425	2,965	2,965
OUTPUT FUTURE	**435**	**303**	**141**	**351**	**1,436**	**1,344**	**1,369**	**1,383**	3,381	3,381
INPUT FUTURE	430	303	140	351	1,430	1,344	1,344	1,383	3,343	3,381
									38.54	

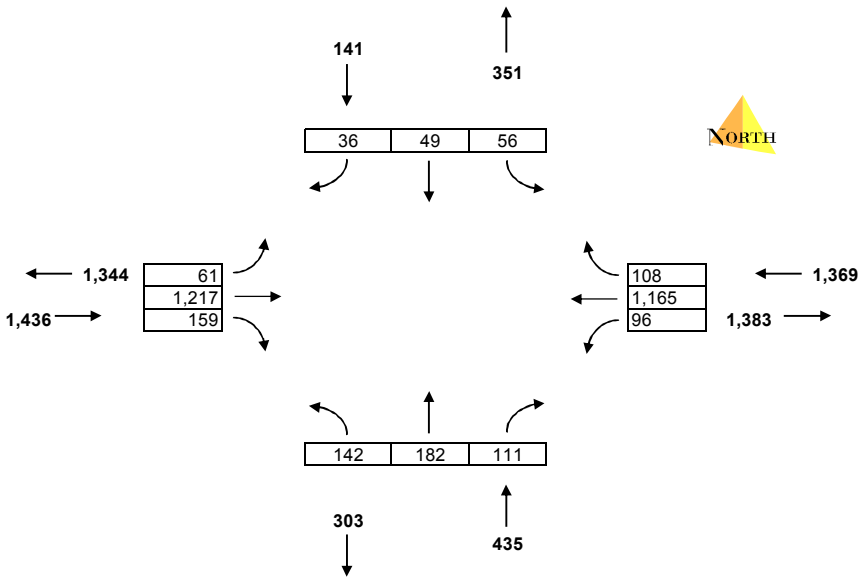

* Turn Calculation Output from NCHRP 255

Insert data into cells with blue font : HEADER INFO, BASE YEAR TURN MOVEMENTS, FUTURE YEAR LINK VOLUMES

OUTPUT DATA IS IN BOLD PRINT.

INTERSECTION :	TV Hwy @ Cornelius Pass		
SCENARIO :	2035 with 2012 UGB Buildout - With South Hillsboro		
PEAK HOUR :	AM		
BASE YEAR :	2011	EAST-WEST ROAD:	TV Hwy
FUTURE YEAR :	2035	NORTH-SOUTH ROAD:	Cornelius Pass

	PEAK HOUR TURNING MOVEMENTS											
	NORTHBOUND			SOUTHBOUND			EASTBOUND			WESTBOUND		
YEAR	Left	Thru	Right	Left	Thru	Right	Left	Thru	Right	Left	Thru	Right
BASE YEAR	1	1	1	380	1	150	110	1,220	1	1	1,175	330
OUTPUT FUTURE	**407**	**843**	**407**	**383**	**181**	**151**	**174**	**935**	**138**	**123**	**804**	**467**

	PEAK HOUR DIRECTIONAL LINK VOLUMES									
	SOUTHLEG		NORTHLEG		WESTLEG		EASTLEG		ALL LEGS	
YEAR	In	Out	In	Out	In	Out	In	Out	In	Out
BASE YEAR	3	3	531	441	1,331	1,326	1,506	1,601	3,371	3,371
OUTPUT FUTURE	**1,657**	**442**	**716**	**1,484**	**1,247**	**1,363**	**1,394**	**1,726**	5,015	5,015
INPUT FUTURE	1,715	442	741	1,484	1,291	1,363	1,442	1,726	5,189	5,015
									-174.3	

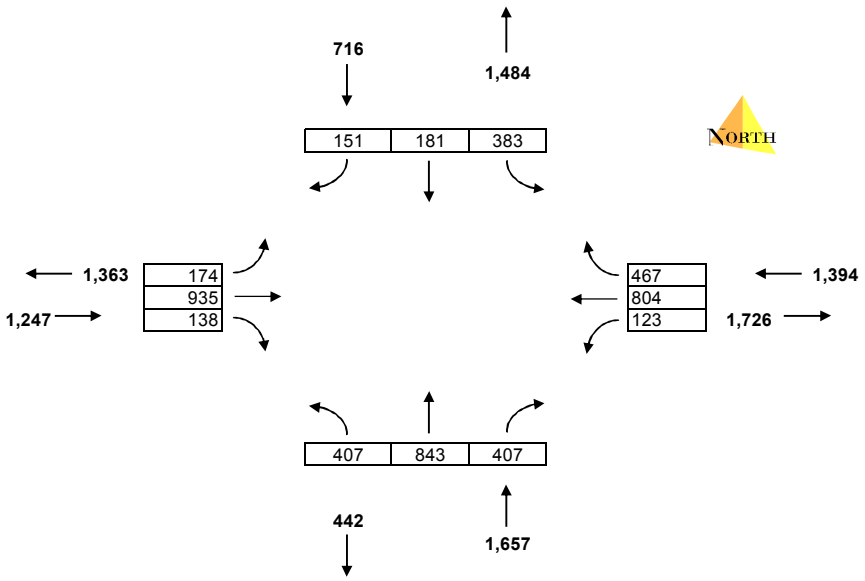

* Turn Calculation Output from NCHRP 255

Insert data into cells with blue font : HEADER INFO, BASE YEAR TURN MOVEMENTS, FUTURE YEAR LINK VOLUMES

OUTPUT DATA IS IN BOLD PRINT.

INTERSECTION :	TV Hwy @ 209th Av e		
SCENARIO :	2035 with 2012 UGB Buildout - With South Hillsboro		
PEAK HOUR :	AM		
BASE YEAR :	2011	EAST-WEST ROAD:	TV Hwy
FUTURE YEAR :	2035	NORTH-SOUTH ROAD:	209

	PEAK HOUR TURNING MOVEMENTS											
	NORTHBOUND			SOUTHBOUND			EASTBOUND			WESTBOUND		
YEAR	Left	Thru	Right	Left	Thru	Right	Left	Thru	Right	Left	Thru	Right
BASE YEAR	305	195	90	35	70	25	5	1,410	255	65	1,270	15
OUTPUT FUTURE	**224**	**449**	**164**	**54**	**101**	**16**	**7**	**1,550**	**263**	**154**	**1,295**	**48**

	PEAK HOUR DIRECTIONAL LINK VOLUMES									
	SOUTHLEG		NORTHLEG		WESTLEG		EASTLEG		ALL LEGS	
YEAR	In	Out	In	Out	In	Out	In	Out	In	Out
BASE YEAR	590	390	130	215	1,670	1,600	1,350	1,535	3,740	3,740
OUTPUT FUTURE	**837**	**518**	**171**	**504**	**1,821**	**1,534**	**1,497**	**1,768**	4,325	4,325
INPUT FUTURE	837	518	169	504	1,798	1,534	1,505	1,768	4,308	4,325

16.19

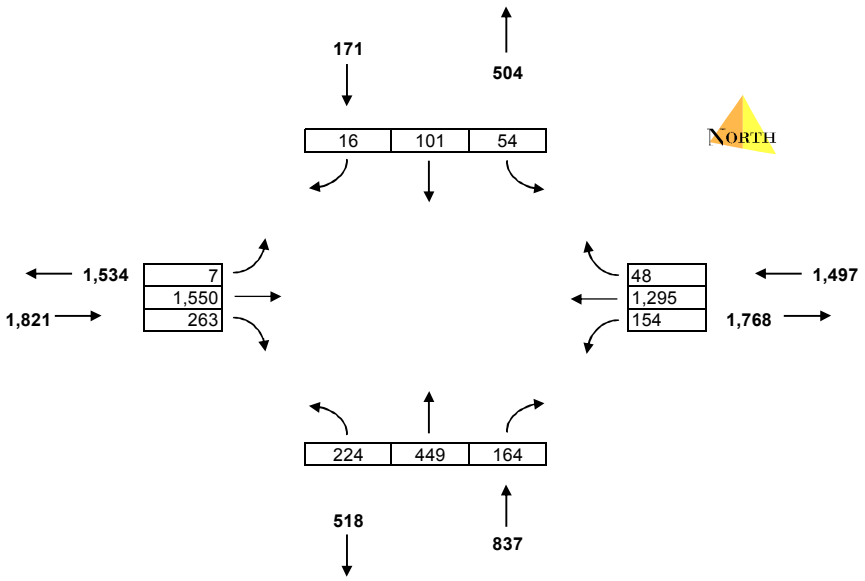

* Turn Calculation Output from NCHRP 255

Insert data into cells with blue font : HEADER INFO, BASE YEAR TURN MOVEMENTS, FUTURE YEAR LINK VOLUMES

OUTPUT DATA IS IN BOLD PRINT.

INTERSECTION :	TV Hwy @ 198th		
SCENARIO :	2035 with 2012 UGB Buildout - With South Hillsboro		
PEAK HOUR :	AM		
BASE YEAR :	2011	EAST-WEST ROAD:	TV Hwy
FUTURE YEAR :	2035	NORTH-SOUTH ROAD:	198

	PEAK HOUR TURNING MOVEMENTS											
	NORTHBOUND			SOUTHBOUND			EASTBOUND			WESTBOUND		
YEAR	Left	Thru	Right	Left	Thru	Right	Left	Thru	Right	Left	Thru	Right
BASE YEAR	270	290	385	180	135	30	20	1,295	150	175	935	80
OUTPUT FUTURE	**284**	**515**	**328**	**236**	**168**	**49**	**48**	**1,488**	**164**	**152**	**1,050**	**152**

	PEAK HOUR DIRECTIONAL LINK VOLUMES									
	SOUTHLEG		NORTHLEG		WESTLEG		EASTLEG		ALL LEGS	
YEAR	In	Out	In	Out	In	Out	In	Out	In	Out
BASE YEAR	945	460	345	390	1,465	1,235	1,190	1,860	3,945	3,945
OUTPUT FUTURE	**1,128**	**484**	**453**	**715**	**1,700**	**1,383**	**1,354**	**2,052**	4,634	4,634
INPUT FUTURE	1,122	484	451	715	1,692	1,383	1,345	2,052	4,610	4,634
									23.55	

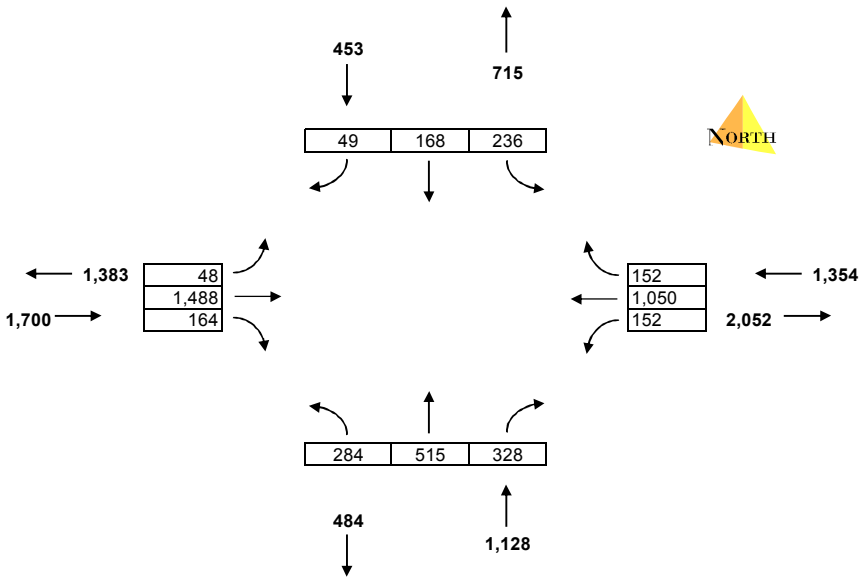

* Turn Calculation Output from NCHRP 255

Insert data into cells with blue font : HEADER INFO, BASE YEAR TURN MOVEMENTS, FUTURE YEAR LINK VOLUMES

OUTPUT DATA IS IN BOLD PRINT.

INTERSECTION :	TV Hwy @ 185th Ave		
SCENARIO :	2035 with 2012 UGB Buildout - With South Hillsboro		
PEAK HOUR :	AM		
BASE YEAR :	2011	EAST-WEST ROAD:	TV Hwy
FUTURE YEAR :	2035	NORTH-SOUTH ROAD:	185

	PEAK HOUR TURNING MOVEMENTS											
	NORTHBOUND			SOUTHBOUND			EASTBOUND			WESTBOUND		
YEAR	Left	Thru	Right	Left	Thru	Right	Left	Thru	Right	Left	Thru	Right
BASE YEAR	180	515	135	235	345	125	165	1,535	95	95	910	155
OUTPUT FUTURE	**365**	**965**	**203**	**187**	**484**	**134**	**209**	**1,559**	**170**	**119**	**871**	**137**

	PEAK HOUR DIRECTIONAL LINK VOLUMES									
	SOUTHLEG		NORTHLEG		WESTLEG		EASTLEG		ALL LEGS	
YEAR	In	Out	In	Out	In	Out	In	Out	In	Out
BASE YEAR	830	535	705	835	1,795	1,215	1,160	1,905	4,490	4,490
OUTPUT FUTURE	**1,533**	**773**	**806**	**1,311**	**1,937**	**1,370**	**1,127**	**1,949**	5,404	5,404
INPUT FUTURE	1,562	773	821	1,311	1,974	1,370	1,148	1,949	5,504	5,404
									-100.9	

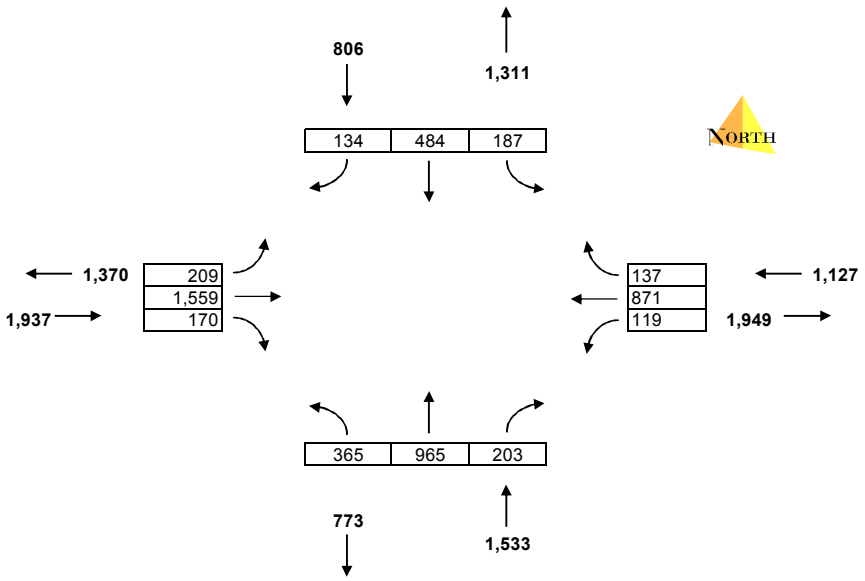

* Turn Calculation Output from NCHRP 255

Insert data into cells with blue font : HEADER INFO, BASE YEAR TURN MOVEMENTS, FUTURE YEAR LINK VOLUMES

OUTPUT DATA IS IN BOLD PRINT.

INTERSECTION :	River Rd @ Minter Bridge		
SCENARIO :	2035 with 2012 UGB Buildout - With South Hillsboro		
PEAK HOUR :	AM		
BASE YEAR :	2011	EAST-WEST ROAD:	River Rd
FUTURE YEAR :	2035	NORTH-SOUTH ROAD:	Minter Br

	PEAK HOUR TURNING MOVEMENTS											
	NORTHBOUND			SOUTHBOUND			EASTBOUND			WESTBOUND		
YEAR	Left	Thru	Right	Left	Thru	Right	Left	Thru	Right	Left	Thru	Right
BASE YEAR	90	280	45	135	165	25	35	230	135	25	305	150
OUTPUT FUTURE	**156**	**377**	**68**	**103**	**223**	**22**	**26**	**194**	**202**	**67**	**527**	**202**

	PEAK HOUR DIRECTIONAL LINK VOLUMES									
	SOUTHLEG		NORTHLEG		WESTLEG		EASTLEG		ALL LEGS	
YEAR	In	Out	In	Out	In	Out	In	Out	In	Out
BASE YEAR	415	325	325	465	400	420	480	410	1,620	1,620
OUTPUT FUTURE	**601**	**492**	**348**	**606**	**422**	**705**	**796**	**365**	2,168	2,168
INPUT FUTURE	608	492	351	606	426	705	805	365	2,190	2,168
									22.52	

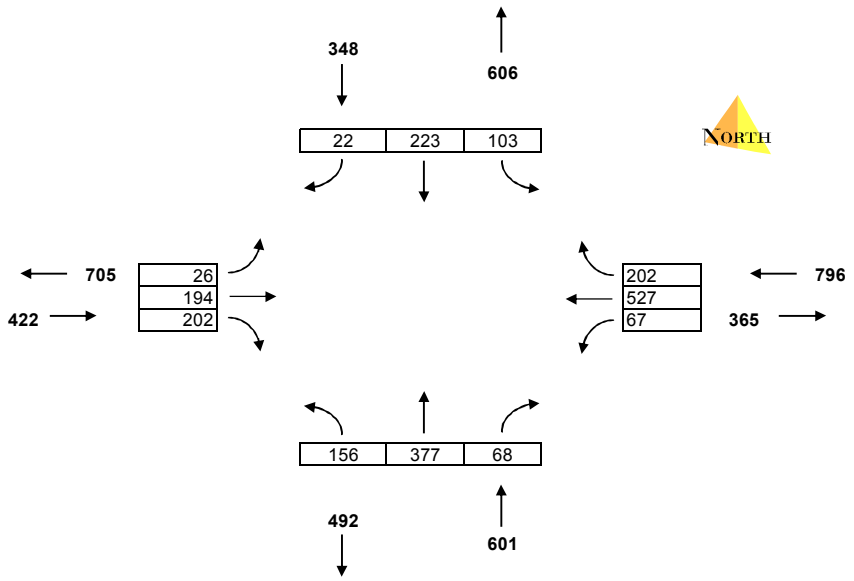

* Turn Calculation Output from NCHRP 255

Insert data into cells with blue font : HEADER INFO, BASE YEAR TURN MOVEMENTS, FUTURE YEAR LINK VOLUMES

OUTPUT DATA IS IN BOLD PRINT.

INTERSECTION :	Farmington @ 209th		
SCENARIO :	2035 with 2012 UGB Buildout - With South Hillsboro		
PEAK HOUR :	AM		
BASE YEAR :	2011	EAST-WEST ROAD:	Farmington
FUTURE YEAR :	2035	NORTH-SOUTH ROAD:	209

	PEAK HOUR TURNING MOVEMENTS											
	NORTHBOUND			SOUTHBOUND			EASTBOUND			WESTBOUND		
YEAR	Left	Thru	Right	Left	Thru	Right	Left	Thru	Right	Left	Thru	Right
BASE YEAR	20	295	50	100	165	95	115	255	10	25	160	160
OUTPUT FUTURE	**20**	**459**	**91**	**339**	**204**	**176**	**189**	**489**	**7**	**22**	**215**	**338**

	PEAK HOUR DIRECTIONAL LINK VOLUMES									
	SOUTHLEG		NORTHLEG		WESTLEG		EASTLEG		ALL LEGS	
YEAR	In	Out	In	Out	In	Out	In	Out	In	Out
BASE YEAR	365	200	360	570	380	275	345	405	1,450	1,450
OUTPUT FUTURE	**569**	**233**	**718**	**985**	**685**	**411**	**575**	**919**	2,547	2,547
INPUT FUTURE	566	233	714	985	681	411	573	919	2,534	2,547
									12.88	

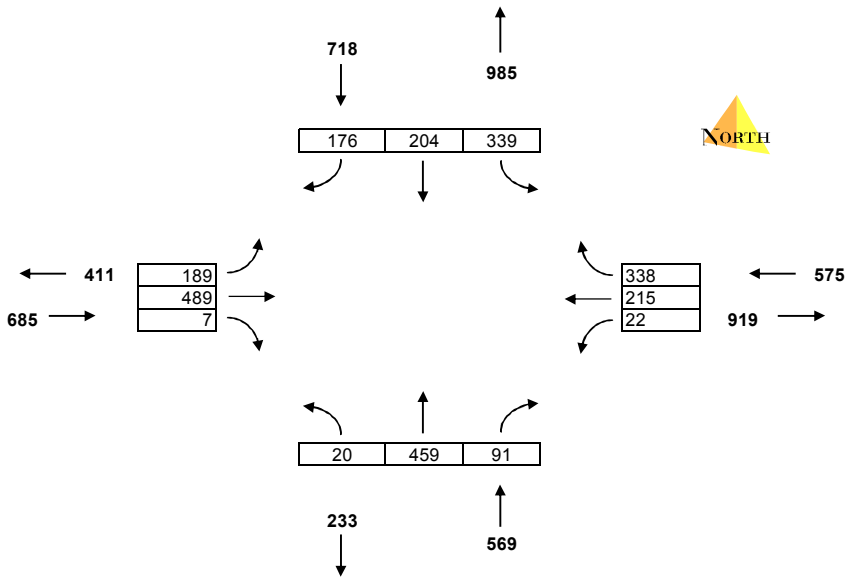

* Turn Calculation Output from NCHRP 255

Insert data into cells with blue font : HEADER INFO, BASE YEAR TURN MOVEMENTS, FUTURE YEAR LINK VOLUMES

OUTPUT DATA IS IN BOLD PRINT.

INTERSECTION :	Kinnaman (north) @ 198th		
SCENARIO :	2035 with 2012 UGB Buildout - With South Hillsboro		
PEAK HOUR :	AM		
BASE YEAR :	2011	EAST-WEST ROAD:	Kinnaman (n)
FUTURE YEAR :	2035	NORTH-SOUTH ROAD:	198

	PEAK HOUR TURNING MOVEMENTS											
	NORTHBOUND			SOUTHBOUND			EASTBOUND			WESTBOUND		
YEAR	Left	Thru	Right	Left	Thru	Right	Left	Thru	Right	Left	Thru	Right
BASE YEAR	0	625	145	145	180	0	0	0	0	35	0	200
OUTPUT FUTURE	**0**	**615**	**327**	**132**	**186**	**0**	**0**	**0**	**0**	**138**	**0**	**301**

	PEAK HOUR DIRECTIONAL LINK VOLUMES									
	SOUTHLEG		NORTHLEG		WESTLEG		EASTLEG		ALL LEGS	
YEAR	In	Out	In	Out	In	Out	In	Out	In	Out
BASE YEAR	770	215	325	825	0	0	235	290	1,330	1,330
OUTPUT FUTURE	**942**	**324**	**318**	**916**	**0**	**0**	**439**	**459**	1,700	1,700
INPUT FUTURE	942	324	318	916	0	0	439	459	1,700	1,700
									-0.092	

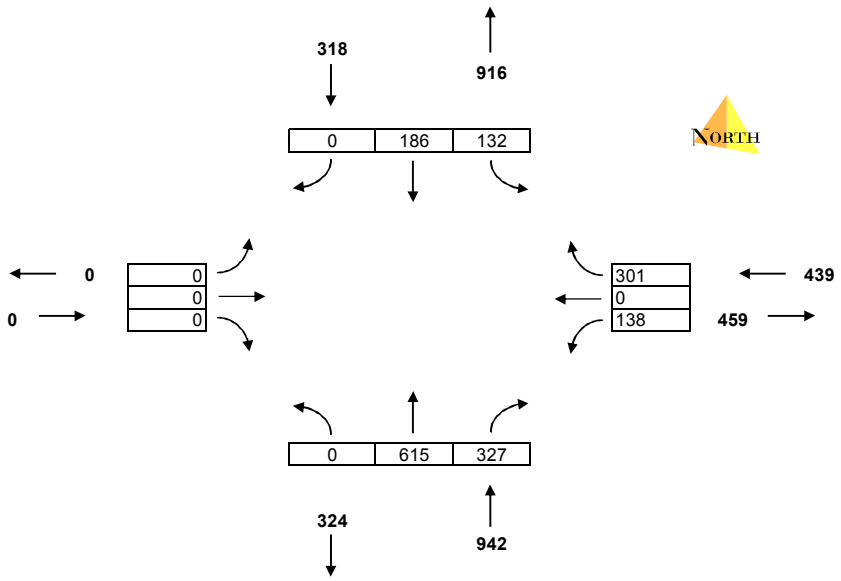

* Turn Calculation Output from NCHRP 255

Insert data into cells with blue font : HEADER INFO, BASE YEAR TURN MOVEMENTS, FUTURE YEAR LINK VOLUMES

OUTPUT DATA IS IN BOLD PRINT.

INTERSECTION :	Kinnaman @ 198th		
SCENARIO :	2035 with 2012 UGB Buildout - With South Hillsboro		
PEAK HOUR :	AM		
BASE YEAR :	2011	EAST-WEST ROAD:	Kinnaman
FUTURE YEAR :	2035	NORTH-SOUTH ROAD:	198

	PEAK HOUR TURNING MOVEMENTS											
	NORTHBOUND			SOUTHBOUND			EASTBOUND			WESTBOUND		
YEAR	Left	Thru	Right	Left	Thru	Right	Left	Thru	Right	Left	Thru	Right
BASE YEAR	45	365	0	0	180	30	70	0	50	0	0	0
OUTPUT FUTURE	**107**	**354**	**0**	**0**	**169**	**139**	**212**	**0**	**75**	**0**	**0**	**0**

	PEAK HOUR DIRECTIONAL LINK VOLUMES									
	SOUTHLEG		NORTHLEG		WESTLEG		EASTLEG		ALL LEGS	
YEAR	In	Out	In	Out	In	Out	In	Out	In	Out
BASE YEAR	410	230	210	435	120	75	0	0	740	740
OUTPUT FUTURE	**461**	**244**	**308**	**566**	**287**	**246**	**0**	**0**	1,056	1,056
INPUT FUTURE	475	244	318	566	296	246	0	0	1,089	1,056
									-33.08	

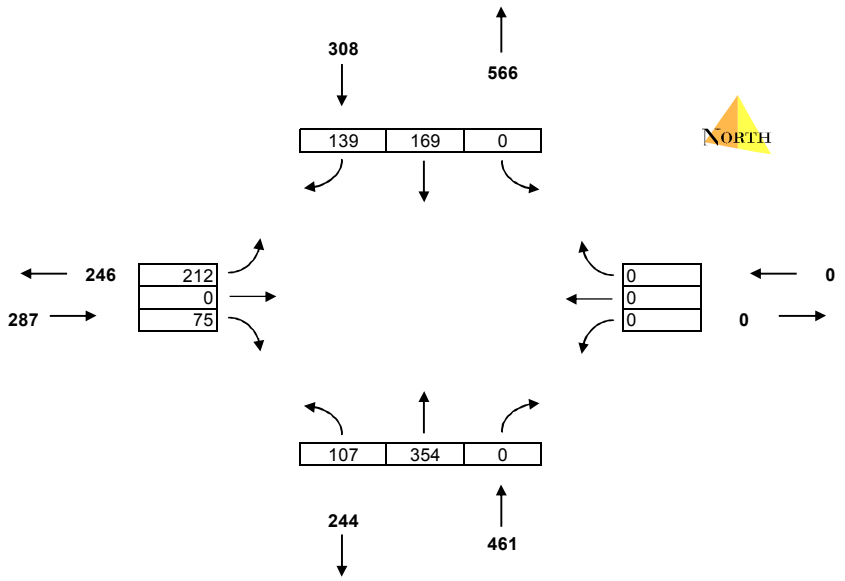

* Turn Calculation Output from NCHRP 255

Insert data into cells with blue font : HEADER INFO, BASE YEAR TURN MOVEMENTS, FUTURE YEAR LINK VOLUMES

OUTPUT DATA IS IN BOLD PRINT.

INTERSECTION :	Kinnaman @ 185th		
SCENARIO :	2035 with 2012 UGB Buildout - With South Hillsboro		
PEAK HOUR :	AM		
BASE YEAR :	2011	EAST-WEST ROAD:	Kinnaman
FUTURE YEAR :	2035	NORTH-SOUTH ROAD:	185

	PEAK HOUR TURNING MOVEMENTS											
	NORTHBOUND			SOUTHBOUND			EASTBOUND			WESTBOUND		
YEAR	Left	Thru	Right	Left	Thru	Right	Left	Thru	Right	Left	Thru	Right
BASE YEAR	85	395	35	90	200	100	135	345	65	75	290	145
OUTPUT FUTURE	**198**	**938**	**79**	**121**	**304**	**139**	**176**	**428**	**91**	**123**	**436**	**222**

	PEAK HOUR DIRECTIONAL LINK VOLUMES									
	SOUTHLEG		NORTHLEG		WESTLEG		EASTLEG		ALL LEGS	
YEAR	In	Out	In	Out	In	Out	In	Out	In	Out
BASE YEAR	515	340	390	675	545	475	510	470	1,960	1,960
OUTPUT FUTURE	**1,215**	**518**	**564**	**1,336**	**695**	**773**	**782**	**628**	3,256	3,256
INPUT FUTURE	1,219	518	566	1,336	698	773	784	628	3,267	3,256
									-10.67	

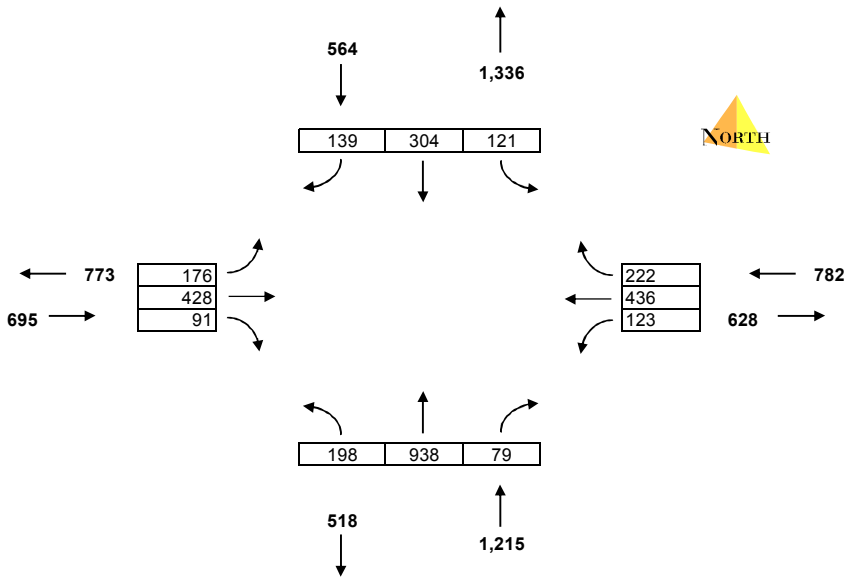

* Turn Calculation Output from NCHRP 255

Insert data into cells with blue font : HEADER INFO, BASE YEAR TURN MOVEMENTS, FUTURE YEAR LINK VOLUMES

OUTPUT DATA IS IN BOLD PRINT.

INTERSECTION :	Farmington @ 198th		
SCENARIO :	2035 with 2012 UGB Buildout - With South Hillsboro		
PEAK HOUR :	AM		
BASE YEAR :	2011	EAST-WEST ROAD:	Farmington
FUTURE YEAR :	2035	NORTH-SOUTH ROAD:	198

	PEAK HOUR TURNING MOVEMENTS											
	NORTHBOUND			SOUTHBOUND			EASTBOUND			WESTBOUND		
YEAR	Left	Thru	Right	Left	Thru	Right	Left	Thru	Right	Left	Thru	Right
BASE YEAR	0	0	0	200	0	80	125	440	0	0	355	140
OUTPUT FUTURE	**0**	**0**	**0**	**327**	**0**	**80**	**189**	**988**	**0**	**0**	**541**	**237**

	PEAK HOUR DIRECTIONAL LINK VOLUMES									
	SOUTHLEG		NORTHLEG		WESTLEG		EASTLEG		ALL LEGS	
YEAR	In	Out	In	Out	In	Out	In	Out	In	Out
BASE YEAR	0	0	280	265	565	435	495	640	1,340	1,340
OUTPUT FUTURE	**0**	**0**	**407**	**426**	**1,178**	**621**	**778**	**1,316**	2,362	2,362
INPUT FUTURE	0	0	411	426	1,188	621	787	1,316	2,386	2,362
									-23.68	

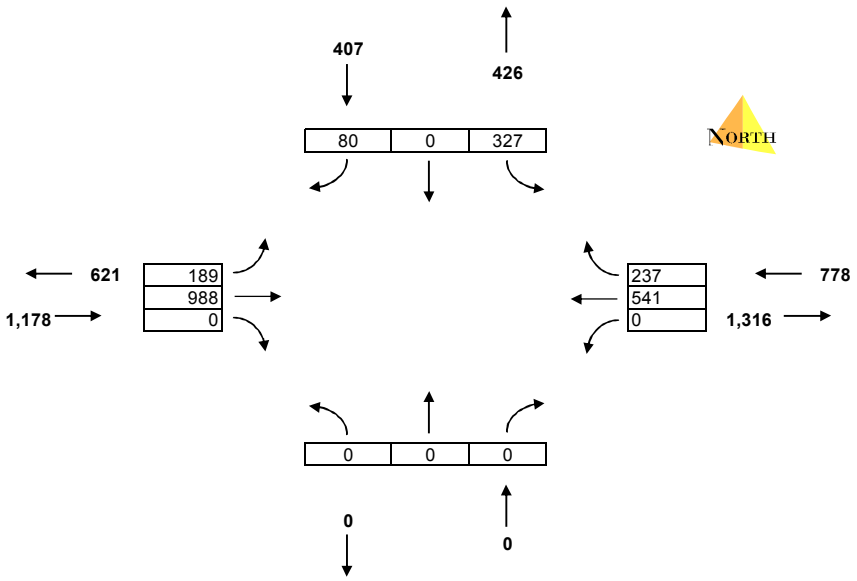

* Turn Calculation Output from NCHRP 255

Insert data into cells with blue font : HEADER INFO, BASE YEAR TURN MOVEMENTS, FUTURE YEAR LINK VOLUMES

OUTPUT DATA IS IN BOLD PRINT.

INTERSECTION :	Farmington @ 185th		
SCENARIO :	2035 with 2012 UGB Buildout - With South Hillsboro		
PEAK HOUR :	AM		
BASE YEAR :	2011	EAST-WEST ROAD:	Farmington
FUTURE YEAR :	2035	NORTH-SOUTH ROAD:	185

	PEAK HOUR TURNING MOVEMENTS											
	NORTHBOUND			SOUTHBOUND			EASTBOUND			WESTBOUND		
YEAR	Left	Thru	Right	Left	Thru	Right	Left	Thru	Right	Left	Thru	Right
BASE YEAR	180	325	120	75	190	80	115	630	105	35	240	30
OUTPUT FUTURE	**203**	**529**	**124**	**128**	**223**	**149**	**382**	**1,329**	**152**	**43**	**466**	**84**

	PEAK HOUR DIRECTIONAL LINK VOLUMES									
	SOUTHLEG		NORTHLEG		WESTLEG		EASTLEG		ALL LEGS	
YEAR	In	Out	In	Out	In	Out	In	Out	In	Out
BASE YEAR	625	330	345	470	850	500	305	825	2,125	2,125
OUTPUT FUTURE	**856**	**417**	**501**	**996**	**1,863**	**819**	**593**	**1,581**	3,813	3,813
INPUT FUTURE	876	417	512	996	1,905	819	606	1,581	3,899	3,813
									-85.94	

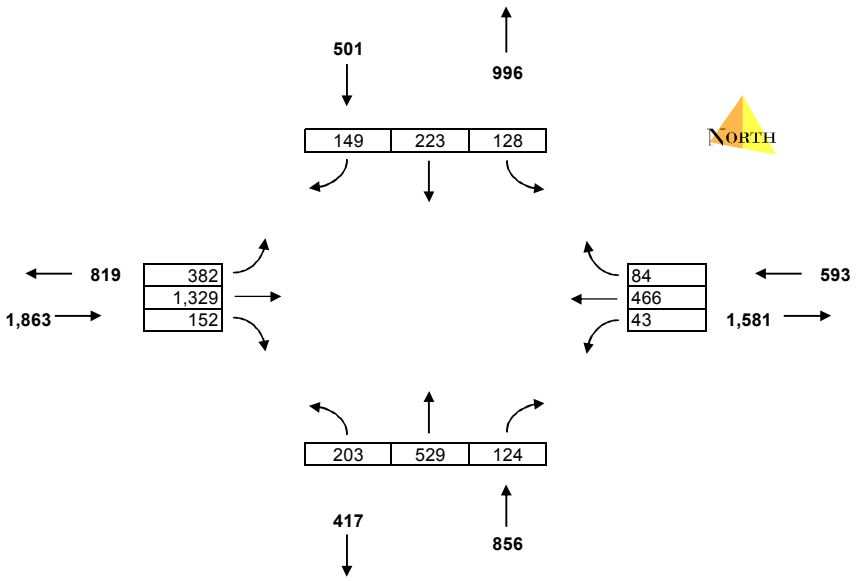

* Turn Calculation Output from NCHRP 255

Insert data into cells with blue font : HEADER INFO, BASE YEAR TURN MOVEMENTS, FUTURE YEAR LINK VOLUMES

OUTPUT DATA IS IN BOLD PRINT.

INTERSECTION :	Cornelius Pass Rd @ johnson St		
SCENARIO :	2035 with 2012 UGB Buildout - With South Hillsboro		
PEAK HOUR :	AM		
BASE YEAR :	2011	EAST-WEST ROAD:	Johnson St
FUTURE YEAR :	2035	NORTH-SOUTH ROAD:	Cornelius Pass

	PEAK HOUR TURNING MOVEMENTS											
	NORTHBOUND			SOUTHBOUND			EASTBOUND			WESTBOUND		
YEAR	Left	Thru	Right	Left	Thru	Right	Left	Thru	Right	Left	Thru	Right
BASE YEAR	85	310	80	15	295	15	20	50	145	250	15	35
OUTPUT FUTURE	**164**	**1,071**	**221**	**39**	**295**	**27**	**76**	**152**	**170**	**276**	**30**	**125**

	PEAK HOUR DIRECTIONAL LINK VOLUMES									
	SOUTHLEG		NORTHLEG		WESTLEG		EASTLEG		ALL LEGS	
YEAR	In	Out	In	Out	In	Out	In	Out	In	Out
BASE YEAR	475	690	325	365	215	115	300	145	1,315	1,315
OUTPUT FUTURE	**1,455**	**741**	**361**	**1,272**	**398**	**221**	**432**	**412**	2,646	2,646
INPUT FUTURE	1,484	741	369	1,272	407	221	441	412	2,701	2,646
									55.68	

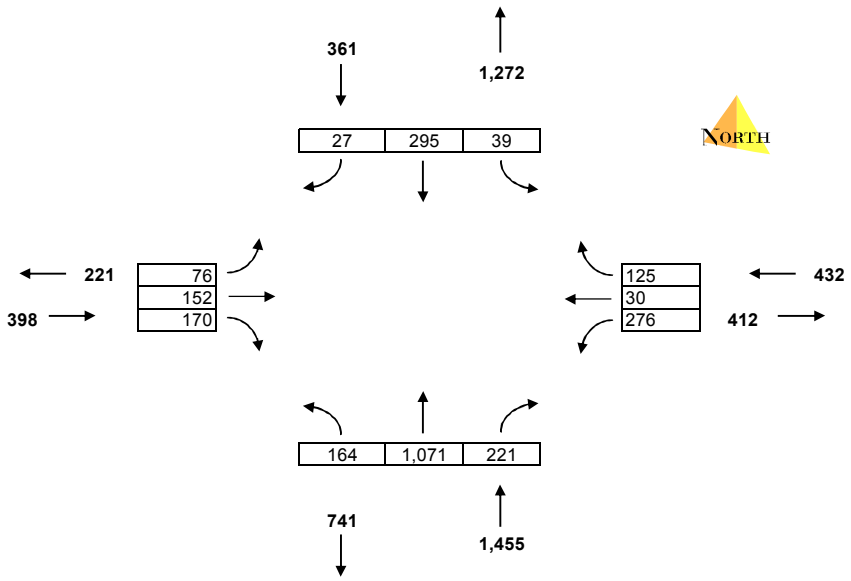

* Turn Calculation Output from NCHRP 255

Insert data into cells with blue font : HEADER INFO, BASE YEAR TURN MOVEMENTS, FUTURE YEAR LINK VOLUMES

OUTPUT DATA IS IN BOLD PRINT.

INTERSECTION :	198th Ave @ Blanton (south)		
SCENARIO :	2035 with 2012 UGB Buildout - With South Hillsboro		
PEAK HOUR :	AM		
BASE YEAR :	2011	EAST-WEST ROAD:	Blanton (South)
FUTURE YEAR :	2035	NORTH-SOUTH ROAD:	198

	PEAK HOUR TURNING MOVEMENTS											
	NORTHBOUND			SOUTHBOUND			EASTBOUND			WESTBOUND		
YEAR	Left	Thru	Right	Left	Thru	Right	Left	Thru	Right	Left	Thru	Right
BASE YEAR	150	315	0	0	145	180	485	0	150	0	0	0
OUTPUT FUTURE	**117**	**460**	**0**	**0**	**185**	**213**	**580**	**0**	**104**	**0**	**0**	**0**

	PEAK HOUR DIRECTIONAL LINK VOLUMES									
	SOUTHLEG		NORTHLEG		WESTLEG		EASTLEG		ALL LEGS	
YEAR	In	Out	In	Out	In	Out	In	Out	In	Out
BASE YEAR	465	295	325	800	635	330	0	0	1,425	1,425
OUTPUT FUTURE	**577**	**289**	**397**	**1,040**	**684**	**330**	**0**	**0**	1,659	1,659
INPUT FUTURE	536	289	369	1,040	635	330	0	0	1,540	1,659
									-118.8	

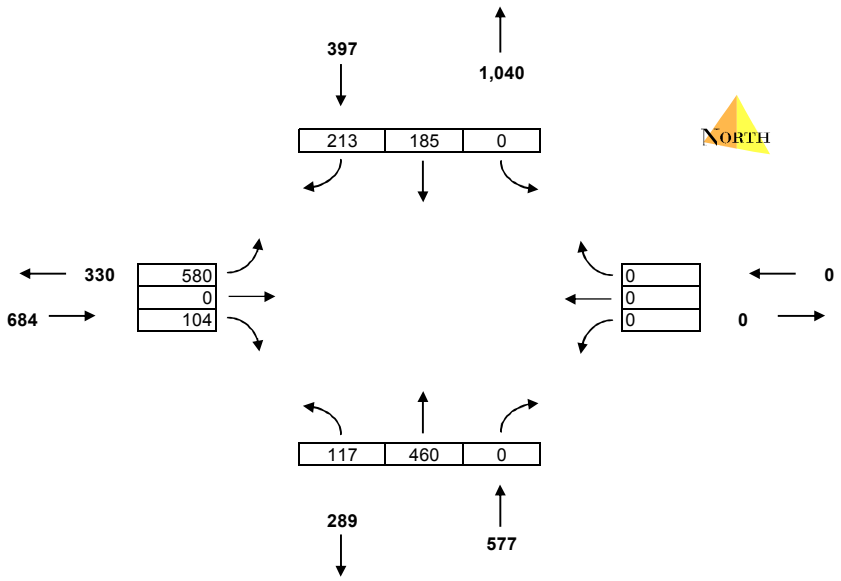

* Turn Calculation Output from NCHRP 255

Insert data into cells with blue font : HEADER INFO, BASE YEAR TURN MOVEMENTS, FUTURE YEAR LINK VOLUMES

OUTPUT DATA IS IN BOLD PRINT.

INTERSECTION :	198th Ave @ Blanton St North		
SCENARIO :	2035 with 2012 UGB Buildout - With South Hillsboro		
PEAK HOUR :	AM		
BASE YEAR :	2011	EAST-WEST ROAD:	Blanton St (North)
FUTURE YEAR :	2035	NORTH-SOUTH ROAD:	198

	PEAK HOUR TURNING MOVEMENTS											
	NORTHBOUND			SOUTHBOUND			EASTBOUND			WESTBOUND		
YEAR	Left	Thru	Right	Left	Thru	Right	Left	Thru	Right	Left	Thru	Right
BASE YEAR	0	700	100	280	255	0	0	0	0	50	0	255
OUTPUT FUTURE	**0**	**858**	**216**	**240**	**261**	**0**	**0**	**0**	**0**	**108**	**0**	**263**

	PEAK HOUR DIRECTIONAL LINK VOLUMES									
	SOUTHLEG		NORTHLEG		WESTLEG		EASTLEG		ALL LEGS	
YEAR	In	Out	In	Out	In	Out	In	Out	In	Out
BASE YEAR	800	305	535	955	0	0	305	380	1,640	1,640
OUTPUT FUTURE	**1,074**	**369**	**500**	**1,122**	**0**	**0**	**372**	**456**	1,947	1,947
INPUT FUTURE	1,040	369	484	1,122	0	0	360	456	1,884	1,947
									-62.81	

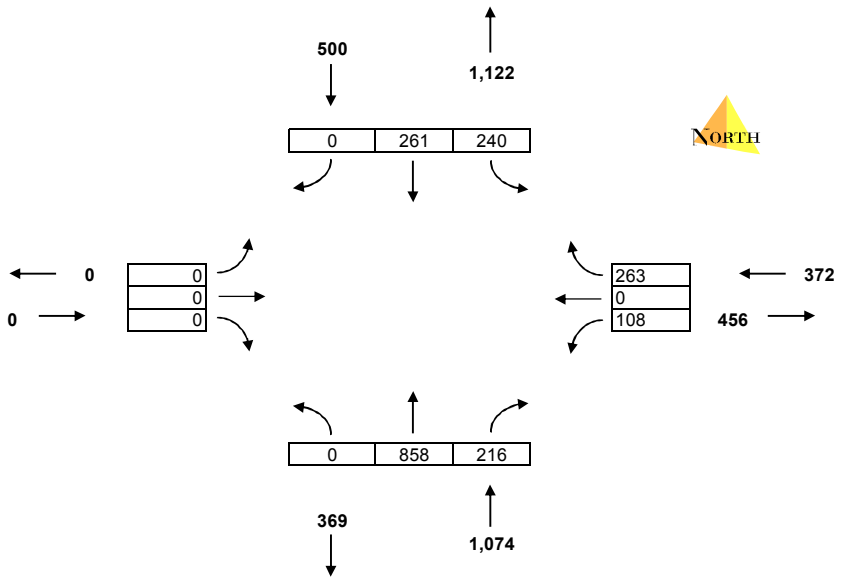

* Turn Calculation Output from NCHRP 255

Insert data into cells with blue font : HEADER INFO, BASE YEAR TURN MOVEMENTS, FUTURE YEAR LINK VOLUMES

OUTPUT DATA IS IN BOLD PRINT.

INTERSECTION :	185th Ave @ Blanton St (South)		
SCENARIO :	2035 with 2012 UGB Buildout - With South Hillsboro		
PEAK HOUR :	AM		
BASE YEAR :	2011	EAST-WEST ROAD:	Blanton (South)
FUTURE YEAR :	2035	NORTH-SOUTH ROAD:	185

	PEAK HOUR TURNING MOVEMENTS											
	NORTHBOUND			SOUTHBOUND			EASTBOUND			WESTBOUND		
YEAR	Left	Thru	Right	Left	Thru	Right	Left	Thru	Right	Left	Thru	Right
BASE YEAR	0	685	135	130	430	0	0	0	0	60	0	155
OUTPUT FUTURE	**0**	**1,282**	**219**	**186**	**613**	**0**	**0**	**0**	**0**	**77**	**0**	**229**

	PEAK HOUR DIRECTIONAL LINK VOLUMES									
	SOUTHLEG		NORTHLEG		WESTLEG		EASTLEG		ALL LEGS	
YEAR	In	Out	In	Out	In	Out	In	Out	In	Out
BASE YEAR	820	490	560	840	0	0	215	265	1,595	1,595
OUTPUT FUTURE	**1,501**	**690**	**799**	**1,511**	**0**	**0**	**306**	**405**	2,606	2,606
INPUT FUTURE	1,549	690	826	1,511	0	0	316	405	2,691	2,606
									85.23	

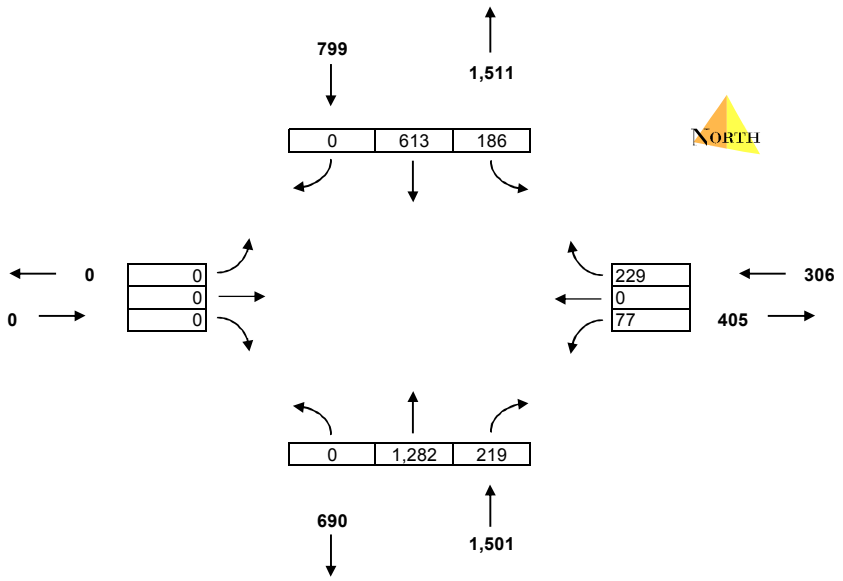

* Turn Calculation Output from NCHRP 255

Insert data into cells with blue font : HEADER INFO, BASE YEAR TURN MOVEMENTS, FUTURE YEAR LINK VOLUMES

OUTPUT DATA IS IN BOLD PRINT.

INTERSECTION :	185th Ave @ Blanton North		
SCENARIO :	2035 with 2012 UGB Buildout - With South Hillsboro		
PEAK HOUR :	AM		
BASE YEAR :	2011	EAST-WEST ROAD:	Blanton (north)
FUTURE YEAR :	2035	NORTH-SOUTH ROAD:	185

	PEAK HOUR TURNING MOVEMENTS											
	NORTHBOUND			SOUTHBOUND			EASTBOUND			WESTBOUND		
YEAR	Left	Thru	Right	Left	Thru	Right	Left	Thru	Right	Left	Thru	Right
BASE YEAR	110	640	0	0	460	110	225	0	90	0	0	0
OUTPUT FUTURE	**178**	**1,291**	**0**	**0**	**699**	**109**	**259**	**0**	**128**	**0**	**0**	**0**

	PEAK HOUR DIRECTIONAL LINK VOLUMES									
	SOUTHLEG		NORTHLEG		WESTLEG		EASTLEG		ALL LEGS	
YEAR	In	Out	In	Out	In	Out	In	Out	In	Out
BASE YEAR	750	550	570	865	315	220	0	0	1,635	1,635
OUTPUT FUTURE	**1,469**	**826**	**807**	**1,550**	**387**	**286**	**0**	**0**	2,663	2,663
INPUT FUTURE	1,511	826	828	1,550	398	286	0	0	2,737	2,663
									74.47	

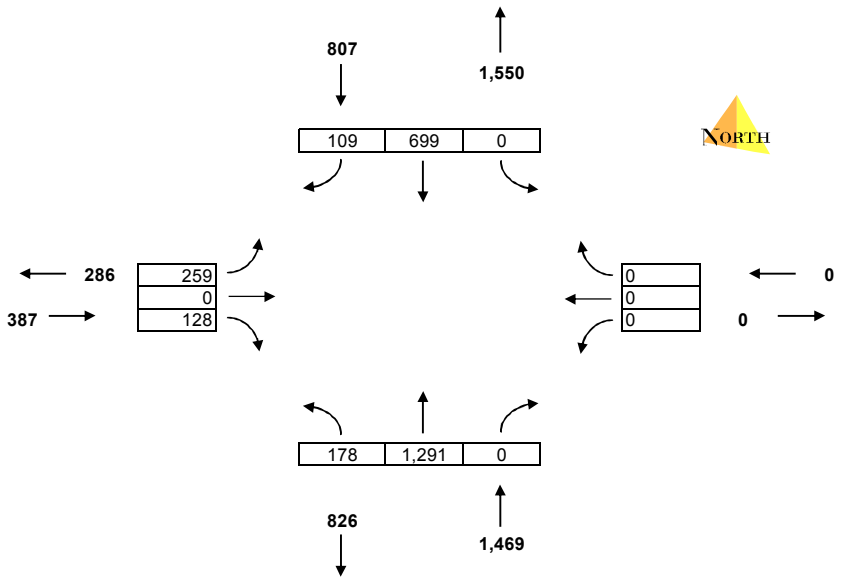

* Turn Calculation Output from NCHRP 255

Project: South Hillsboro Focus Area Plan
Job #: ODOT0000-0737
Subject: ***PM Build Turning Movement Volumes***
Created: 6/8/2011
Rev. Date: 3/5/2013

3/5/2013

Less than Existing Less than TV Hwy Base

Int No.	Synchro ID	Intersection	Direction	Movement	2011 Existing BALANCED DHV 1-Hr Volume PM Peak	2010 Hillsboro Model Turn Volumes	Jun-12 2035 SoHi Model Turn Volumes w/229th	2035 SoHi - 2010 Turn Vol Diff	2035 SoHi Network Unbalanced	Difference (Volume Adjustment)	2035 SoHi Network Adjusted	Difference (Volume Balancing)	2035 SoHi Network Balanced w/229th	Oct-12 2035 SoHi Network Rerun Turn Vol w/o 229th	Oct-June Difference (Model Turn Volume)	2035 Volume Adjustments	Oct-12 2035 SoHi Balanced Volumes w/o 229th	Adjusted to SoHi Internal and Surrounding area	Final Combined Volumes
1	10	TV Highway @ SE River Rd.*		EBL	15	0	0	0	15	5	20		20	16	16	0	20	0	20
	10	2 hr PM Turning Movement Count	EB	EBT	1185	1,006	1,432	426	1,610		1,610	(190)	1,420	1,376	(56)	0	1,420	(170)	1250
	10	Count Date: 5/20/2010		EBR	340	313	523	210	550		550		550	443	(80)	(80)	470	35	505
	10	2010		WBL	25	31	77	46	70		70		70	35	(42)	(20)	50	15	65
	10		WB	WBT	1040	826	938	112	1,150		1,150		1,150	842	(96)	20	1,170	(40)	1130
	10			WBR	85	76	51	(25)	60	50	110		110	51	0	0	110	0	110
	10			NBL	240	303	293	(10)	230	10	240		240	296	3	0	240	0	240
	10		NB	NBT	135	85	58	(27)	110	30	140		140	43	(15)	0	140	0	140
	10			NBR	25	3	7	4	30	5	35		35	2	(5)	0	35	0	35
	10			SBL	55	45	18	(27)	30	65	95		95	28	10	0	95	0	95
	10		SB	SBT	70	157	342	185	255		255		255	305	(37)	0	255	(85)	170
	10			SBR	25	0	0	0	25		25		25	0	0	0	25	0	25
			TEV	**TEV**	**3240**	**2845**	**3739**	**894**	**4135**	**165**	**4300**	**-190**	**4,110**	**3437**	**(302)**	**(80)**	**4,030**	**(245)**	**3785**
12	70	SW River Rd. @ SE Davis Rd.		EBL	0	0	0	0	0		0		0	0	0	0	0	0	0
	70	2 hr PM Turning Movement Count	EB	EBT	0	0	0	0	0		0		0	0	0	0	0	0	0
	70	Count Date: 5/24/2011		EBR	0	0	0	0	0		0		0	0	0	0	0	0	0
	70	2011		WBL	85	157	334	177	260	(10)	250		250	333	(1)	0	250	0	250
	70		WB	WBT	0	0	0	0	0		0		0	0	0	0	0	0	0
	70			WBR	55	129	118	(11)	45	10	55		55	124	6	0	55	0	55
	70			NBL	0	0	0	0	0		0		0	0	0	0	0	0	0
	70		NB	NBT	380	288	274	(14)	365		365		365	276	2	0	365	0	365
	70			NBR	85	110	244	134	220		220		220	244	0	0	220	0	220
	70			SBL	65	98	211	113	180		180		180	203	(8)	0	180	0	180
	70		SB	SBT	470	363	524	161	630		630		630	511	(13)	0	630	0	630
	70			SBR	0	0	0	0	0		0		0	0	0	0	0	0	0
			TEV	**TEV**	**1140**	**1145**	**1705**	**560**	**1700**	**0**	**1700**	**0**	**1,700**	**1691**	**(14)**	**0**	**1,700**	**0**	**1700**
13	25	Witch Hazel at Brookwood		EBL													195	(195)	0
	25		EB	EBT													5	(5)	0
	25	This intersection was balanced off the		EBR													50	200	250
	25	neighboring intersections and the combination		WBL													25	(25)	0
	25	of the surrounding SoHi area as well as the	WB	WBT													25	(25)	0
	25	SoHi area as well as the internal area. It did not		WBR													40	50	90
	25	go through the volume development process.		NBL													40	(40)	0
	25		NB	NBT													245	235	480
	25			NBR													5	55	60
	25			SBL													100	(100)	0
	25		SB	SBT													700	50	750
	25			SBR													290	50	340
			TEV	**TEV**											**0**		**1,720**	**250**	**1970**
14	80	SE Alexander St. @ SE Brookwood Rd.		EBL	25	0	57	57	80	(25)	55		55	27	(30)	0	55	0	55
	80	2 hr PM Turning Movement Count	EB	EBT	30	0	0	0	30	15	45		45	0	0	0	45	0	45
	80	Count Date: 5/24/2011		EBR	0	0	0	0	0	10	10		10	0	0	0	10	0	10
	80	2011		WBL	10	0	2	2	10		10		10	7	5	0	10	0	10
	80		WB	WBT	40	0	3	3	45		45		45	0	(3)	0	45	0	45
	80			WBR	75	56	98	42	115		115		115	90	(8)	0	115	0	115
	80			NBL	0	0	0	0	0	10	10		10	0	0	0	10	0	10
	80		NB	NBT	85	173	203	30	115		115		115	202	(1)	0	115	0	115
	80			NBR	25	0	0	0	25	5	30		30	0	0	0	30	0	30
	80			SBL	45	36	210	174	220		220		220	227	17	0	220	0	220
	80		SB	SBT	95	243	462	219	315		315		315	490	28	0	315	(15)	300
	80			SBR	70	0	168	168	240		240		240	169	1	0	240	(10)	230
			TEV	**TEV**	**500**	**508**	**1203**	**695**	**1195**	**15**	**1210**	**0**	**1,210**	**1212**	**9**	**0**	**1,210**	**(25)**	**1185**

Project: South Hillsboro Focus Area Plan
Job #: ODOT0000-0737
Subject: *PM Build Turning Movement Volumes*
Created: 6/8/2011
Rev. Date: 3/5/2013

3/5/2013

Less than Existing Less than TV Hwy Base

Int No.	Synchro ID	Intersection	Direction	Movement	2011 Existing BALANCED DHV 1-Hr Volume PM Peak	2010 Hillsboro Model Turn Volumes	Jun-12 2035 SoHi Model Turn Volumes w/229th	2035 SoHi - 2010 Turn Vol Diff	2035 SoHi Network Unbalanced	Difference (Volume Adjustment)	2035 SoHi Network Adjusted	Difference (Volume Balancing)	2035 SoHi Network Balanced w/229th	Oct-12 2035 SoHi Network Rerun Turn Vol w/o 229th	Oct-June Difference (Model Turn Volume)	2035 Volume Adjustments	Oct-12 2035 SoHi Balanced Volumes w/o 229th	Adjusted to SoHi Internal and Surrounding area	Final Combined Volumes
15	90	SE Alexander St. @ SE 234th Ave.		EBL	75	108	98	(10)	65		65		65	148	50	5	70	0	70
	90	2 hr PM Turning Movement Count	EB	EBT	55	62	205	143	200		200		200	191	(14)	(5)	195	0	195
	90	Count Date: 4/1/2008		EBR	10	0	56	56	65		65		65	36	(20)	0	65	0	65
	90	2011		WBL	10	69	105	36	45		45		45	43	(62)	0	45	0	45
	90		WB	WBT	30	60	89	29	60		60		60	65	(24)	(30)	30	0	30
	90			WBR	30	0	86	86	115		115		115	137	51	95	210	0	210
	90			NBL	5	0	4	4	10		10		10	4	0	0	10	0	10
	90		NB	NBT	45	83	239	156	200		200		200	294	55	0	200	0	200
	90			NBR	15	30	66	36	50		50		50	22	(44)	0	50	0	50
	90			SBL	35	19	217	198	235		235		235	256	39	70	305	(100)	205
	90		SB	SBT	45	101	497	396	440		440	90	530	574	77	45	575	(100)	475
	90			SBR	90	76	178	102	190		190		190	196	18	30	220	(100)	120
			TEV	**TEV**	**445**	**608**	**1840**	**1232**	**1675**	**0**	**1675**	**90**	**1,765**	**1966**	**126**	**210**	**1,975**	**(300)**	**1675**
16	100	SE Alexander St. @ SE 229th Ave.		EBL	30	62	102	40	70		70	(20)	50	0	(102)	(45)	5	0	5
	100	2 hr PM Turning Movement Count	EB	EBT	0	0	380	380	380	(50)	330	50	380	459	79	115	495	0	495
	100	Count Date: 5/24/2011		EBR	45	49	7	(42)	5	50	55		55	10	3	0	55	0	55
	100	2011		WBL	0	0	3	3	5		5	100	105	20	17	0	105	0	105
	100		WB	WBT	0	0	153	153	155		155		155	245	92	95	250	0	250
	100			WBR	0	0	124	124	125		125		125	0	(124)	(120)	5	0	5
	100			NBL	35	8	0	(8)	25	20	45		45	0	0	0	45	0	45
	100		NB	NBT	100	166	10	(156)	100	(75)	25		25	0	(10)	(20)	5	0	5
	100			NBR	0	0	1	1	0	10	10		10	3	2	25	35	0	35
	100			SBL	0	0	130	130	130		130		130	0	(130)	(125)	5	0	5
	100		SB	SBT	55	263	229	(34)	20	35	55	55	110	0	(229)	(105)	5	0	5
	100			SBR	25	120	127	7	30		30		30	0	(127)	(25)	5	0	5
			TEV	**TEV**	**290**	**668**	**1266**	**598**	**1045**	**-10**	**1035**	**185**	**1,220**	**737**	**(529)**	**(205)**	**1,015**	**0**	**1015**
17	110	SE Alexander St. @ Cornelius Pass Rd		EBL		0	227	227	225		225		225	233	6	70	295	0	295
	110		EB	EBT		0	284	284	285		285		285	287	3	0	285	0	285
	110			EBR		0	112	112	110		110		110	105	(7)	(60)	50	0	50
	110			WBL		0	4	4	5		5	75	80	2	(2)	0	80	0	80
	110		WB	WBT		0	278	278	280		280		280	278	0	(30)	250	0	250
	110			WBR		0	165	165	165		165		165	166	1	30	195	0	195
	110			NBL		0	9	9	10		10		10	8	(1)	0	10	0	10
	110		NB	NBT		0	375	375	375		375		375	353	(22)	0	375	0	375
	110			NBR		0	0	0	0	10	10		10	0	0	0	10	0	10
	110			SBL		0	247	247	245		245	100	345	259	12	0	345	0	345
	110		SB	SBT		0	1,119	1,119	1,120		1,120	190	1,310	1,195	76	125	1,435	0	1435
	110			SBR		0	297	297	295		295		295	328	31	0	295	0	295
			TEV	**TEV**	**0**	**0**	**3117**	**3117**	**3115**	**10**	**3125**	**365**	**3,490**	**3214**	**97**	**135**	**3,625**	**0**	**3625**
18	120	SW 209th Ave. @ SW Blanton Rd.		EBL	0	0	158	158	160		160		160	167	9	0	160	0	160
	120	2 hr PM Turning Movement Count	EB	EBT	0	0	104	104	105		105		105	118	14	0	105	0	105
	120	Count Date: 5/18/2010		EBR	0	0	176	176	175		175		175	174	(2)	0	175	0	175
	120	2010		WBL	15	0	101	101	115		115		115	81	(20)	0	115	0	115
	120		WB	WBT	0	0	250	250	250		250		250	263	13	0	250	0	250
	120			WBR	35	0	2	2	35		35		35	2	0	0	35	0	35
	120			NBL	0	0	170	170	170	(70)	100		100	165	(5)	0	100	0	100
	120		NB	NBT	460	467	401	(66)	395	70	465		465	400	(1)	0	465	0	465
	120			NBR	20	0	44	44	65		65		65	41	(3)	0	65	0	65
	120			SBL	45	0	105	105	150	(40)	110		110	122	17	0	110	0	110
	120		SB	SBT	750	590	552	(38)	710	90	800		800	605	53	0	800	0	800
	120			SBR	0	0	222	222	220	(50)	170		170	218	(4)	0	170	0	170
			TEV	**TEV**	**1325**	**1057**	**2285**	**1228**	**2550**	**0**	**2550**	**0**	**2,550**	**2356**	**71**	**0**	**2,550**	**0**	**2550**

Project: South Hillsboro Focus Area Plan
Job #: ODOT0000-0737
Subject: *PM Build Turning Movement Volumes*
Created: 6/8/2011
Rev. Date: 3/5/2013

3/5/2013

Less than Existing Less than TV Hwy Base

Int No.	Synchro ID	Intersection	Direction	Movement	2011 Existing BALANCED DHV 1-Hr Volume PM Peak	2010 Hillsboro Model Turn Volumes	Jun-12 2035 SoHi Model Turn Volumes w/229th	2035 SoHi - 2010 Turn Vol Diff	2035 SoHi Network Unbalanced	Difference (Volume Adjustment)	2035 SoHi Network Adjusted	Difference (Volume Balancing)	2035 SoHi Network Balanced w/229th	Oct-12 2035 SoHi Network Rerun Turn Vol w/o 229th	Oct-June Difference (Model Turn Volume)	2035 Volume Adjustments	Oct-12 2035 SoHi Balanced Volumes w/o 229th	Adjusted to SoHi Internal and Surrounding area	Final Combined Volumes
21	130	SE Century Blvd. @ SW Kinnaman Rd.		EBL		0	0	0	0		0		0	0	0	0	0	0	0
	130		EB	EBT		0	0	0	0		0		0	0	0	0	0	0	0
	130			EBR		0	0	0	0		0		0	0	0	0	0	0	0
	130			WBL		0	121	121	120		120		120	115	(6)	0	120	0	120
	130		WB	WBT		0	0	0	0		0		0	0	0	0	0	0	0
	130			WBR		0	23	23	25		25		25	23	0	0	25	0	25
	130			NBL		0	0	0	0		0		0	0	0	0	0	0	0
	130		NB	NBT		0	251	251	250		250		250	254	3	0	250	0	250
	130			NBR		0	57	57	55		55		55	60	3	0	55	0	55
	130			SBL		0	61	61	60		60		60	69	8	45	105	0	105
	130		SB	SBT		0	710	710	710		710	(130)	580	734	24	0	580	0	580
	130			SBR		0	0	0	0		0		0	0	0	0	0	0	0
			TEV	**TEV**	**0**	**0**	**1223**	**1223**	**1220**	**0**	**1220**	**-130**	**1,090**	**1255**	**32**	**45**	**1,135**	**0**	**1135**
22	140	Cornelius Pass Rd. @ SW Kinnaman Rd.		EBL		0	50	50	50		50		50	48	(2)	0	50	0	50
	140		EB	EBT		0	265	265	265		265		265	225	(40)	(65)	200	0	200
	140			EBR		0	51	51	50		50		50	33	(18)	0	50	0	50
	140			WBL		0	136	136	135		135	(75)	60	99	(37)	0	60	0	60
	140		WB	WBT		0	107	107	105		105		105	191	84	0	105	0	105
	140			WBR		0	81	81	80		80		80	73	(8)	0	80	0	80
	140			NBL		0	47	47	45		45		45	50	3	0	45	0	45
	140		NB	NBT		0	253	253	255		255		255	241	(12)	0	255	0	255
	140			NBR		0	30	30	30		30		30	33	3	0	30	0	30
	140			SBL		0	214	214	215		215		215	221	7	65	280	0	280
	140		SB	SBT		0	935	935	935		935	75	1,010	954	19	0	1,010	0	1010
	140			SBR		0	85	85	85		85		85	128	43	0	85	0	85
			TEV	**TEV**	**0**	**0**	**2254**	**2254**	**2250**	**0**	**2250**	**0**	**2,250**	**2296**	**42**	**0**	**2,250**	**0**	**2250**
23	150	SW 209th Ave. @ SW Kinnaman Rd.		EBL	0	0	76	76	75		75		75	78	2	0	75	0	75
	150	2 hr PM Turning Movement Count	EB	EBT	0	0	200	200	200		200		200	165	(35)	0	200	0	200
	150	Count Date: 5/18/2010		EBR	0	0	151	151	150		150		150	146	(5)	0	150	0	150
	150	2010		WBL	10	10	69	59	70		70		70	73	4	0	70	0	70
	150		WB	WBT	0	0	134	134	135		135		135	147	13	0	135	0	135
	150			WBR	30	40	66	26	55		55		55	56	(10)	0	55	0	55
	150			NBL	0	0	70	70	70		70		70	73	3	0	70	0	70
	150		NB	NBT	445	297	317	20	465		465		465	312	(5)	0	465	0	465
	150			NBR	10	9	42	33	45		45		45	43	1	0	45	0	45
	150			SBL	45	72	179	107	150		150		150	200	21	0	150	0	150
	150		SB	SBT	700	438	474	36	735		735		735	490	16	0	735	0	735
	150			SBR	0	0	167	167	165		165		165	177	10	0	165	0	165
			TEV	**TEV**	**1240**	**866**	**1945**	**1079**	**2315**	**0**	**2315**	**0**	**2,315**	**1960**	**15**	**0**	**2,315**	**0**	**2315**
26	160	SW Rosa Rd. @ SW 229th Ave.		EBL	0	0	0	0	0		0		0			0	0	0	0
	160	2 hr PM Turning Movement Count	EB	EBT	0	0	0	0	0		0		0			0	0	0	0
	160	Count Date: 5/26/2011		EBR	0	0	0	0	0		0		0			0	0	0	0
	160	2011		WBL	0	0	0	0	0	10	10		10			0	10	0	10
	160		WB	WBT	0	0	0	0	0		0		0			0	0	0	0
	160			WBR	0	0	123	123	125		125		125			0	125	0	125
	160			NBL	0	0	0	0	0		0		0			0	0	0	0
	160		NB	NBT	85	139	89	(50)	35	50	85		85			0	85	0	85
	160			NBR	0	0	0	0	0	10	10		10			0	10	0	10
	160			SBL	0	0	176	176	175		175		175			0	175	0	175
	160		SB	SBT	80	314	368	54	135		135	50	185			0	185	0	185
	160			SBR	5	0	0	0	5		5	(5)	0			0	0	0	0
			TEV	**TEV**	**170**	**453**	**756**	**303**	**475**	**70**	**545**	**45**	**590**			**0**	**590**	**0**	**590**

Project: South Hillsboro Focus Area Plan
Job #: ODOT0000-0737
Subject: *PM Build Turning Movement Volumes*
Created: 6/8/2011
Rev. Date: 3/5/2013

3/5/2013

Less than Existing Less than TV Hwy Base

Int No.	Synchro ID	Intersection	Direction	Movement	2011 Existing BALANCED DHV 1-Hr Volume PM Peak	2010 Hillsboro Model Turn Volumes	Jun-12 2035 SoHi Model Turn Volumes w/229th	2035 SoHi - 2010 Turn Vol Diff	2035 SoHi Network Unbalanced	Difference (Volume Adjustment)	2035 SoHi Network Adjusted	Difference (Volume Balancing)	2035 SoHi Network Balanced w/229th	Oct-12 2035 SoHi Network Rerun Turn Vol w/o 229th	Oct-June Difference (Model Turn Volume)	2035 Volume Adjustments	Oct-12 2035 SoHi Balanced Volumes w/o 229th	Adjusted to SoHi Internal and Surrounding area	Final Combined Volumes
27	170	Cornelius Pass Rd. @ SW Rosa Rd.		EBL		0	118	118	120		120		120			0	120	0	120
	170		EB	EBT		0	98	98	100		100		100			0	100	0	100
	170			EBR		0	0	0	0	5	5		5			0	5	0	5
	170			WBL		0	0	0	0	5	5		5			0	5	0	5
	170		WB	WBT		0	91	91	90		90		90			0	90	0	90
	170			WBR		0	105	105	105		105		105			0	105	0	105
	170			NBL		0	4	4	5		5		5			0	5	0	5
	170		NB	NBT		0	116	116	115		115		115			0	115	0	115
	170			NBR		0	0	0	0	5	5		5			0	5	0	5
	170			SBL		0	263	263	265		265		265			0	265	0	265
	170		SB	SBT		0	527	527	525		525		525			0	525	0	525
	170			SBR		0	259	259	260		260		260			0	260	0	260
			TEV	**TEV**	**0**	**0**	**1581**	**1581**	**1585**	**15**	**1600**	**0**	**1,600**			**0**	**1,600**	**0**	**1600**
28	180	SW 209th Ave. @ SW Rosa Rd.		EBL	0	0	86	86	85		85		85			0	85	0	85
	180	2 hr PM Turning Movement Count	EB	EBT	0	0	125	125	125		125		125			0	125	0	125
	180	Count Date: 4/1/2008		EBR	0	0	72	72	70		70		70			0	70	0	70
	180	2008		WBL	10	8	9	1	10		10		10			0	10	0	10
	180		WB	WBT	0	0	142	142	140		140		140			0	140	0	140
	180			WBR	20	0	0	0	20		20		20			0	20	0	20
	180			NBL	0	0	31	31	30		30		30			0	30	0	30
	180		NB	NBT	370	305	340	35	405		405		405			0	405	0	405
	180			NBR	30	2	2	0	30		30		30			0	30	0	30
	180			SBL	70	0	0	0	70		70		70			0	70	0	70
	180		SB	SBT	650	442	475	33	685		685		685			0	685	0	685
	180			SBR	0	0	182	182	180		180		180			0	180	0	180
			TEV	**TEV**	**1150**	**757**	**1464**	**707**	**1850**	**0**	**1850**	**0**	**1,850**			**0**	**1,850**	**0**	**1850**
29	190	SW River Rd. @ SW Rosedale Rd.		EBL	0	0	0	0	0		0		0			0	0	0	0
	190	2 hr PM Turning Movement Count	EB	EBT	0	0	0	0	0		0		0			0	0	0	0
	190	Count Date: 5/18/2010		EBR	0	0	0	0	0		0		0			0	0	0	0
	190	2010		WBL	20	97	154	57	75		75	20	95			0	95	0	95
	190		WB	WBT	0	0	0	0	0		0		0			0	0	0	0
	190			WBR	95	125	171	46	140		140	20	160			0	160	0	160
	190			NBL	0	0	0	0	0		0		0			0	0	0	0
	190		NB	NBT	310	274	348	74	385		385		385			0	385	0	385
	190			NBR	10	49	172	123	135		135	5	140			0	140	0	140
	190			SBL	135	140	277	137	270		270		270			0	270	0	270
	190		SB	SBT	380	371	570	199	580		580		580			0	580	0	580
	190			SBR	0	0	0	0	0		0		0			0	0	0	0
			TEV	**TEV**	**950**	**1056**	**1692**	**636**	**1585**	**0**	**1585**	**45**	**1,630**			**0**	**1,630**	**0**	**1630**
30	200	SW Rosedale Rd. @ SW 229th Ave.		EBL	15	49	68	19	35		35		35			0	35	0	35
	200	2 hr PM Turning Movement Count	EB	EBT	130	138	382	244	375		375		375			0	375	0	375
	200	Count Date: 5/18/2010		EBR	0	0	0	0	0		0		0			0	0	0	0
	200	2010		WBL	0	0	0	0	0		0		0			0	0	0	0
	200		WB	WBT	100	133	261	128	230		230	(40)	190			0	190	0	190
	200			WBR	80	91	43	(48)	30	50	80		80			0	80	0	80
	200			NBL	0	0	0	0	0		0		0			0	0	0	0
	200		NB	NBT	0	0	0	0	0		0		0			0	0	0	0
	200			NBR	0	0	0	0	0		0		0			0	0	0	0
	200			SBL	85	215	189	(26)	60	25	85		85			0	85	0	85
	200		SB	SBT	0	0	0	0	0		0		0			0	0	0	0
	200			SBR	25	99	73	(26)	25		25		25			0	25	0	25
			TEV	**TEV**	**435**	**725**	**1016**	**291**	**755**	**75**	**830**	**-40**	**790**			**0**	**790**	**0**	**790**

Project: South Hillsboro Focus Area Plan
Job #: ODOT0000-0737
Subject: ***PM Build Turning Movement Volumes***
Created: 6/8/2011
Rev. Date: 3/5/2013

Less than Existing Less than TV Hwy Base

Int No.	Synchro ID	Intersection	Direction	Movement	2011 Existing BALANCED DHV 1-Hr Volume PM Peak	2010 Hillsboro Model Turn Volumes	Jun-12 2035 SoHi Model Turn Volumes w/229th	2035 SoHi - 2010 Turn Vol Diff	2035 SoHi Network Unbalanced	Difference (Volume Adjustment)	2035 SoHi Network Adjusted	Difference (Volume Balancing)	2035 SoHi Network Balanced w/229th	Oct-12 2035 SoHi Network Rerun Turn Vol w/o 229th	Oct-June Difference (Model Turn Volume)	2035 Volume Adjustments	Oct-12 2035 SoHi Balanced Volumes w/o 229th	Adjusted to SoHi Internal and Surrounding area	Final Combined Volumes
31	210	SW Rosedale Rd. @ Cornelius Pass Rd.		EBL	0	0	53	53	55		55		55			0	55	0	55
	210		EB	EBT	225	361	501	140	365		365		365			0	365	0	365
	210			EBR	0	0	0	0	0		0		0			0	0	0	0
	210			WBL	0	0	0	0	0		0		0			0	0	0	0
	210		WB	WBT	180	237	283	46	225		225		225			0	225	0	225
	210			WBR	0	0	133	133	135		135		135			0	135	0	135
	210			NBL	0	0	0	0	0		0		0			0	0	0	0
	210		NB	NBT	0	0	0	0	0		0		0			0	0	0	0
	210			NBR	0	0	0	0	0		0		0			0	0	0	0
	210			SBL	0	0	325	325	325		325	100	425			0	425	0	425
	210		SB	SBT	0	0	0	0	0		0		0			0	0	0	0
	210			SBR	0	0	44	44	45		45		45			0	45	0	45
			TEV	**TEV**	**405**	**598**	**1339**	**741**	**1150**	**0**	**1150**	**100**	**1,250**			**0**	**1,250**	**0**	**1250**
32	220	SW Rosedale Rd. @ SW 209th Ave.		EBL	35	95	76	(19)	15	50	65		65			0	65	0	65
	220	2 hr PM Turning Movement Count	EB	EBT	25	0	0	0	25		25		25			0	25	0	25
	220	Count Date: 5/18/2010		EBR	165	263	714	451	615	(50)	565	50	615			0	615	0	615
	220	2010		WBL	0	0	0	0	0	5	5	50	55			0	55	0	55
	220		WB	WBT	20	0	0	0	20	10	30		30			0	30	0	30
	220			WBR	15	0	0	0	15	10	25		25			0	25	0	25
	220			NBL	125	177	349	172	295		295		295			0	295	0	295
	220		NB	NBT	330	285	596	311	640		640		640			0	640	0	640
	220			NBR	10	0	0	0	10		10		10			0	10	0	10
	220			SBL	20	0	0	0	20		20		20			0	20	0	20
	220		SB	SBT	480	328	570	242	720		720	85	805			0	805	0	805
	220			SBR	35	57	47	(10)	25		25		25			0	25	0	25
			TEV	**TEV**	**1260**	**1205**	**2352**	**1147**	**2400**	**25**	**2425**	**185**	**2,610**			**0**	**2,610**	**0**	**2610**

Project: South Hillsboro Focus Area Plan
Job #: ODOT0000-0737
Subject: ***PM Turning Movement Volumes***
Created: 7/21/2012
Rev. Date: 3/5/2013

Int ID	Synchro ID	Intersection	Direction	Movement	2011 Final Balanced Volumes for Synchro - PM Peak	Direction Correction: 2035 Baseline NCHRP 255-Link Unbalanced	2012 UGB: 2035 Adjusted Volumes	229th Closure Adjustments	Unbalanced Volume	Volume Balance	Balanced 2035 Baseline Volumes	Adjusted to SoHi Internal and Surrounding area	Final Combined Volumes
2	13	TV Highway @ SE Cypress St.		EBL	120	129	120		120	0	120	0	120
	13	2 hr AM Turning Movement Count	EB	EBT	985	1,252	1,220		1,220	0	1,220	0	1,220
	13	Count Date: 5/20/2010		EBR	115	168	135		135	0	135	0	135
	13	2010		WBL	125	142	150		150	0	150	0	150
	13		WB	WBT	845	856	920		920	0	920	0	920
	13			WBR	90	75	90		90	0	90	0	90
	13			NBL	135	183	155		155	0	155	0	155
	13		NB	NBT	245	274	265		265	0	265	0	265
	13			NBR	120	158	160		160	0	160	0	160
	13			SBL	115	131	165		165	0	165	0	165
	13		SB	SBT	265	348	360		360	0	360	0	360
	13			SBR	125	146	155		155	0	155	0	155
			TEV		**3,285**	**3,864**	**3,895**	**0**	**3,895**	**0**	**3,895**	**0**	**3,895**
3	20	TV Highway @ SE Brookwood Ave.		EBL	140	207	205		205	0	205	0	205
	20	2 hr AM Turning Movement Count	EB	EBT	1,245	1,456	1,455		1,455	0	1,455	0	1,455
	20	Count Date: 1/30/2008		EBR	20	73	75		75	0	75	155	230
	20			WBL	195	405	350		350	0	350	0	350
	20		WB	WBT	1,185	1,173	1,185		1,185	0	1,185	0	1,185
	20			WBR	210	177	175		175	0	175	0	175
	20			NBL	45	75	75		75	0	75	90	165
	20		NB	NBT	165	235	235		235	0	235	0	235
	20			NBR	150	169	170		170	0	170	0	170
	20			SBL	230	165	165		165	0	165	0	165
	20		SB	SBT	230	512	510		510	0	510	0	510
	20			SBR	110	117	115		115	0	115	0	115
			TEV		**3,925**	**4,765**	**4,715**	**0**	**4,715**	**0**	**4,715**	**245**	**4,960**
4	30	TV Highway @ SE Century Blvd./234th		EBL	120	162	165		165	0	165	0	165
	30	2 hr AM Turning Movement Count	EB	EBT	1,390	1,433	1,440	(45)	1,395	0	1,395	0	1,395
	30	Count Date: 9/27/2006		EBR	80	269	225	45	270	0	270	0	270
	30	2006		WBL	80	167	140	30	170	0	170	0	170
	30		WB	WBT	1,345	1,228	1,350	(20)	1,330	0	1,330	0	1,330
	30			WBR	70	59	120		120	0	120	0	120
	30			NBL	50	114	105	20	125	0	125	0	125
	30		NB	NBT	60	125	120	60	180	0	180	0	180
	30			NBR	95	152	140	30	170	0	170	0	170
	30			SBL	85	88	95	(70)	25	0	25	0	25
	30		SB	SBT	80	271	245	70	315	0	315	0	315
	30			SBR	145	215	225		225	0	225	0	225
			TEV		**3,600**	**4,283**	**4,370**	**120**	**4,490**	**0**	**4,490**	**0**	**4,490**
5	40	TV Highway @ SW 67th/229th Ave.		EBL	20	30	50		50	0	50	0	50
	40	2 hr AM Turning Movement Count	EB	EBT	1,435	1,475	1,545	30	1,575	0	1,575	0	1,575
	40	Count Date: 5/20/2010		EBR	20	65	115	(115)	0	0	0	0	0
	40	2010		WBL	30	69	30	(30)	0	0	0	0	0
	40		WB	WBT	1,430	1,352	1,430	110	1,540	0	1,540	0	1,540
	40			WBR	85	92	85		85	0	85	0	85
	40			NBL	20	42	100	(100)	0	0	0	0	0
	40		NB	NBT	40	96	80	(80)	0	0	0	0	0
	40			NBR	60	97	60	(60)	0	0	0	0	0
	40			SBL	115	139	75	125	200	0	200	0	200
	40		SB	SBT	35	134	125	(125)	0	0	0	0	0
	40			SBR	25	39	95		95	0	95	0	95
			TEV		**3,315**	**3,631**	**3,790**	**(245)**	**3,545**	**0**	**3,545**	**0**	**3,545**
6	50	TV Highway @ Cornelius Pass Rd./SW 219th Ave.		EBL	155	164	165		165	0	165	0	165
	50	2 hr AM Turning Movement Count	EB	EBT	1,345	975	1,050	(30)	1,020	0	1,020	0	1,020
	50	Count Date: 5/25/2010		EBR	1	465	465	125	590	0	590	0	590
	50	2010		WBL	1	439	340		340	0	340	0	340
	50		WB	WBT	1,450	1,103	1,345		1,345	0	1,345	0	1,345
	50			WBR	255	255	255		255	0	255	0	255
	50			NBL	1	243	150	80	230	0	230	0	230
	50		NB	NBT	1	320	415	20	435	0	435	0	435
	50			NBR	1	219	200	30	230	0	230	0	230
	50			SBL	505	608	400		400	0	400	0	400
	50		SB	SBT	1	772	1,145		1,145	0	1,145	0	1,145
	50			SBR	185	247	150		150	0	150	0	150
			TEV		**3,901**	**5,810**	**6,080**	**225**	**6,305**	**0**	**6,305**	**0**	**6,305**
7	60	TV Highway @ SW 209th Ave./Anthony Dr		EBL	30	19	20		20	0	20	0	20
	60	2 hr AM Turning Movement Count	EB	EBT	1,355	1,412	1,410		1,410	0	1,410	0	1,410
	60	Count Date: 9/30/2009		EBR	440	359	360		360	0	360	0	360
	60	2009		WBL	140	259	260		260	0	260	0	260
	60		WB	WBT	1,545	1,631	1,630		1,630	0	1,630	0	1,630
	60			WBR	60	88	90		90	0	90	0	90
	60			NBL	170	148	150		150	0	150	0	150
	60		NB	NBT	190	230	230		230	0	230	0	230
	60			NBR	85	166	165		165	0	165	0	165
	60			SBL	30	91	90		90	0	90	0	90
	60		SB	SBT	185	440	440		440	0	440	0	440
	60			SBR	65	88	90		90	0	90	0	90
			TEV		**4,295**	**4,932**	**4,935**	**0**	**4,935**	**0**	**4,935**	**0**	**4,935**

Project: South Hillsboro Focus Area Plan
Job #: ODOT0000-0737
Subject: ***PM Turning Movement Volumes***
Created: 7/21/2012
Rev. Date: 3/5/2013

Int ID	Synchro ID	Intersection	Direction	Movement	2011 Final Balanced Volumes for Synchro - PM Peak	Direction Correction: 2035 Baseline NCHRP 255-Link Unbalanced	2012 UGB: 2035 Adjusted Volumes	229th Closure Adjustments	Unbalanced Volume	Volume Balance	Balanced 2035 Baseline Volumes	Adjusted to SoHi Internal and Surrounding area	Final Combined Volumes
8	65	TV Highway @ SW 198th Ave.		EBL	75	166	150		150	0	150	0	150
	65	2 hr AM Turning Movement Count	EB	EBT	1,140	1,341	1,330		1,330	0	1,330	0	1,330
	65	Count Date: 5/20/2010		EBR	300	201	230		230	0	230	0	230
	65	2010		WBL	240	99	200		200	0	200	0	200
	65		WB	WBT	1,350	1,559	1,545		1,545	0	1,545	0	1,545
	65			WBR	140	191	185		185	0	185	0	185
	65			NBL	255	177	205		205	0	205	0	205
	65		NB	NBT	205	168	190		190	0	190	0	190
	65			NBR	220	96	120		120	0	120	0	120
	65			SBL	140	301	285		285	0	285	0	285
	65		SB	SBT	250	307	335		335	0	335	0	335
	65			SBR	40	137	120		120	0	120	0	120
			TEV		**4,355**	**4,744**	**4,895**	**0**	**4,895**	**0**	**4,895**	**0**	**4,895**
9	66	TV Highway @ SW 185th Ave.		EBL	180	191	190		190	0	190	0	190
	66	2 hr AM Turning Movement Count	EB	EBT	1,125	1,202	1,200		1,200	0	1,200	0	1,200
	66	Count Date: 5/25/2010		EBR	195	372	370		370	0	370	0	370
	66	2010		WBL	195	299	400		400	0	400	0	400
	66		WB	WBT	1,450	1,423	1,450		1,450	0	1,450	0	1,450
	66			WBR	140	120	140		140	0	140	0	140
	66			NBL	190	320	320		320	0	320	0	320
	66		NB	NBT	415	611	610		610	0	610	0	610
	66			NBR	100	148	150		150	0	150	0	150
	66			SBL	220	212	210		210	0	210	0	210
	66		SB	SBT	535	921	800		800	0	800	0	800
	66			SBR	160	176	175		175	0	175	0	175
			TEV		**4,905**	**5,996**	**6,015**	**0**	**6,015**	**0**	**6,015**	**0**	**6,015**
11	12	SE River Rd. @ SE Minter Bridge Rd.		EBL	60	118	145		145	0	145	0	145
	12	2 hr AM Turning Movement Count	EB	EBT	380	652	650		650	0	650	(100)	550
	12	Count Date: 5/24/2011		EBR	90	166	165		165	0	165	(25)	140
	12	2011		WBL	50	49	50		50	0	50	0	50
	12		WB	WBT	310	276	310		310	0	310	0	310
	12			WBR	175	181	200		200	0	200	0	200
	12			NBL	50	71	70		70	0	70	0	70
	12		NB	NBT	195	322	320		320	(20)	300	0	300
	12			NBR	35	51	50		50	0	50	0	50
	12			SBL	220	289	290		290	0	290	0	290
	12		SB	SBT	220	311	315		315	0	315	0	315
	12			SBR	50	65	85		85	0	85	0	85
			TEV		**1,835**	**2,550**	**2,650**	**0**	**2,650**	**(20)**	**2,630**	**(125)**	**2,505**
33	230	Farmington @ 209th		EBL	105	237	235		235	0	235	0	235
	230		EB	EBT	215	396	395		395	50	445	0	445
	230			EBR	20	26	35		35	(15)	20	0	20
	230			WBL	50	71	75		75	(25)	50	0	50
	230		WB	WBT	265	477	475		475	40	515	0	515
	230			WBR	170	426	425		425	40	465	0	465
	230			NBL	5	5	5		5	10	15	0	15
	230		NB	NBT	185	243	245		245	0	245	0	245
	230			NBR	45	48	50		50	25	75	0	75
	230			SBL	185	427	425		425	160	585	0	585
	230		SB	SBT	285	456	455		455	125	580	0	580
	230			SBR	150	304	305		305	5	310	0	310
			TEV		**1,680**	**3,114**	**3,125**	**0**	**3,125**	**415**	**3,540**	**0**	**3,540**
24-N	48	Kinnaman (north) @ 198th		EBL	0	0	0		0	0	0	125	125
	48		EB	EBT	0	0	0		0	0	0	115	115
	48			EBR	0	0	0		0	0	0	25	25
	48			WBL	20	189	190		190	0	190	(50)	140
	48		WB	WBT	0	0	0		0	0	0	50	50
	48			WBR	170	256	255		255	(30)	225	0	225
	48			NBL	0	0	0		0	0	0	30	30
	48		NB	NBT	290	304	305		305	(15)	290	(125)	165
	48			NBR	25	215	215		215	0	215	(115)	100
	48			SBL	250	312	310		310	(20)	290	0	290
	48		SB	SBT	445	425	445		445	20	465	(160)	305
	48			SBR	0	0	0		0	0	0	160	160
			TEV		**1,200**	**1,700**	**1,720**	**0**	**1,720**	**(45)**	**1,675**	**55**	**1,730**
24-S	240	Kinnaman (south) @ 198th		EBL	75	238	240		240	0	240	0	240
	240		EB	EBT	0	0	0		0	0	0	0	0
	240			EBR	20	26	25		25	0	25	0	25
	240			WBL	0	0	0		0	0	0	0	0
	240		WB	WBT	0	0	0		0	0	0	0	0
	240			WBR	0	0	0		0	0	0	0	0
	240			NBL	25	30	30		30	0	30	0	30
	240		NB	NBT	240	288	290		290	(25)	265	0	265
	240			NBR	0	0	0		0	0	0	0	0
	240			SBL	0	0	0		0	0	0	0	0
	240		SB	SBT	285	351	350		350	95	445	0	445
	240			SBR	70	209	210		210	0	210	0	210
			TEV		**715**	**1,142**	**1,145**	**0**	**1,145**	**70**	**1,215**	**0**	**1,215**

Project: South Hillsboro Focus Area Plan
Job #: ODOT0000-0737
Subject: *PM Turning Movement Volumes*
Created: 7/21/2012
Rev. Date: 3/5/2013

Int ID	Synchro ID	Intersection	Direction	Movement	2011 Final Balanced Volumes for Synchro - PM Peak	Direction Correction: 2035 Baseline NCHRP 255-Link Unbalanced	2012 UGB: 2035 Adjusted Volumes	229th Closure Adjustments	Unbalanced Volume	Volume Balance	Balanced 2035 Baseline Volumes	Adjusted to SoHi Internal and Surrounding area	Final Combined Volumes
25	49	Kinnaman @ 185th		EBL	80	124	125		125	0	125	0	125
	49		EB	EBT	240	377	375		375	0	375	0	375
	49			EBR	85	199	200		200	0	200	0	200
	49			WBL	65	113	115		115	0	115	0	115
	49		WB	WBT	255	385	385		385	(35)	350	0	350
	49			WBR	135	155	165		165	0	165	0	165
	49			NBL	60	127	125		125	(25)	100	0	100
	49		NB	NBT	360	580	590		590	0	590	0	590
	49			NBR	35	57	55		55	0	55	0	55
	49			SBL	205	314	315		315	0	315	0	315
	49		SB	SBT	500	1,143	1,145		1,145	(100)	1,045	0	1,045
	49			SBR	45	90	90		90	0	90	0	90
			TEV		**2,065**	**3,663**	**3,685**	**0**	**3,685**	**(160)**	**3,525**	**0**	**3,525**
34	235	Farmington @ 198th		EBL	75	146	145		145	0	145	0	145
	235		EB	EBT	440	962	960		960	0	960	0	960
	235			EBR	0	0	5		5	0	5	0	5
	235			WBL	0	0	5		5	0	5	0	5
	235		WB	WBT	550	1,125	1,125		1,125	0	1,125	0	1,125
	235			WBR	130	315	315		315	0	315	0	315
	235			NBL	0	0	5		5	0	5	0	5
	235		NB	NBT	0	0	5		5	0	5	0	5
	235			NBR	0	0	5		5	0	5	0	5
	235			SBL	160	270	270		270	0	270	0	270
	235		SB	SBT	0	0	5		5	0	5	0	5
	235			SBR	85	108	110		110	0	110	0	110
			TEV		**1,440**	**2,925**	**2,955**	**0**	**2,955**	**0**	**2,955**	**0**	**2,955**
35	237	Farmington Rd @ 185th		EBL	100	210	210		210	0	210	0	210
	237		EB	EBT	405	756	755		755	0	755	0	755
	237			EBR	150	236	235		235	0	235	0	235
	237			WBL	110	158	160		160	0	160	0	160
	237		WB	WBT	650	1,236	1,235		1,235	(100)	1,135	0	1,135
	237			WBR	55	105	110		110	0	110	0	110
	237			NBL	205	261	260		260	0	260	0	260
	237		NB	NBT	245	313	315		315	50	365	0	365
	237			NBR	60	68	70		70	0	70	0	70
	237			SBL	105	221	225		225	0	225	0	225
	237		SB	SBT	300	533	535		535	160	695	0	695
	237			SBR	145	341	340		340	0	340	0	340
			TEV		**2,530**	**4,438**	**4,450**	**0**	**4,450**	**110**	**4,560**	**0**	**4,560**
10	51	Cornelius Pass Rd @ Johnson St		EBL	15	65	75		75	0	75	0	75
	51		EB	EBT	15	32	65		65	0	65	0	65
	51			EBR	125	259	260		260	0	260	0	260
	51			WBL	115	180	180		180	0	180	0	180
	51		WB	WBT	50	61	65		65	0	65	0	65
	51			WBR	15	49	50		50	0	50	0	50
	51			NBL	85	84	85		85	0	85	0	85
	51		NB	NBT	175	463	465		465	0	465	0	465
	51			NBR	150	194	195		195	0	195	0	195
	51			SBL	35	92	145		145	0	145	0	145
	51		SB	SBT	455	1,182	1,180		1,180	0	1,180	0	1,180
	51			SBR	20	40	45		45	0	45	0	45
			TEV		**1,255**	**2,700**	**2,810**	**0**	**2,810**	**0**	**2,810**	**0**	**2,810**
19-S	62	198th Ave @ Blanton St (South)		EBL	130	132	130		130	(50)	80	0	80
	62		EB	EBT	0	0	0		0	0	0	0	0
	62			EBR	150	74	150		150	50	200	0	200
	62			WBL	0	0	0		0	0	0	0	0
	62		WB	WBT	0	0	0		0	0	0	0	0
	62			WBR	0	0	0		0	0	0	0	0
	62			NBL	150	80	150		150	10	160	0	160
	62		NB	NBT	120	223	235		235	25	260	0	260
	62			NBR	0	0	0		0	0	0	0	0
	62			SBL	0	0	0		0	0	0	0	0
	62		SB	SBT	205	321	375		375	100	475	0	475
	62			SBR	285	264	285		285	10	295	0	295
			TEV		**1,040**	**1,094**	**1,325**	**0**	**1,325**	**145**	**1,470**	**0**	**1,470**
19-N	520	198th Ave @ Blanton St (North)		EBL	0	0	0		0	0	0	5	5
	520		EB	EBT	0	0	0		0	0	0	75	75
	520			EBR	0	0	0		0	0	0	200	200
	520			WBL	100	235	235		235	0	235	(205)	30
	520		WB	WBT	0	0	0		0	0	0	205	205
	520			WBR	215	226	225		225	0	225	0	225
	520			NBL	0	0	0		0	0	0	150	150
	520		NB	NBT	200	216	215		215	40	255	(5)	250
	520			NBR	50	145	145		145	(60)	85	(75)	10
	520			SBL	135	181	215		215	0	215	0	215
	520		SB	SBT	390	435	435		435	100	535	(90)	445
	520			SBR	0	0	0		0	0	0	90	90
			TEV		**1,090**	**1,438**	**1,470**	**0**	**1,470**	**80**	**1,550**	**350**	**1,900**

Project: South Hillsboro Focus Area Plan
Job #: ODOT0000-0737
Subject: ***PM Turning Movement Volumes***
Created: 7/21/2012
Rev. Date: 3/5/2013

Int ID	Synchro ID	Intersection	Direction	Movement	2011 Final Balanced Volumes for Synchro - PM Peak	Direction Correction: 2035 Baseline NCHRP 255-Link Unbalanced	2012 UGB: 2035 Adjusted Volumes	229th Closure Adjustments	Unbalanced Volume	Volume Balance	Balanced 2035 Baseline Volumes	Adjusted to SoHi Internal and Surrounding area	Final Combined Volumes
20-S	66	185th Ave @ Blanton (South)		EBL	0	0	0		0	0	0	0	0
	66		EB	EBT	0	0	0		0	0	0	0	0
	66			EBR	0	0	0		0	0	0	0	0
	66			WBL	135	258	260		260	(65)	195	0	195
	66		WB	WBT	0	0	0		0	0	0	0	0
	66			WBR	150	289	290		290	65	355	0	355
	66			NBL	0	0	0		0	0	0	0	0
	66		NB	NBT	515	761	775		775	0	775	0	775
	66			NBR	60	74	75		75	0	75	0	75
	66			SBL	175	264	265		265	15	280	0	280
	66		SB	SBT	785	1,405	1,420		1,420	(145)	1,275	0	1,275
	66			SBR	0	0	0		0	0	0	0	0
			TEV		**1,820**	**3,051**	**3,085**	**0**	**3,085**	**(130)**	**2,955**	**0**	**2,955**
20-N	37	185th Ave @ Blanton (North)		EBL	135	165	175		175	20	195	0	195
	37		EB	EBT	0	0	0		0	0	0	155	155
	37			EBR	110	243	405		405	(20)	385	(155)	230
	37			WBL	0	0	0		0	0	0	195	195
	37		WB	WBT	0	0	0		0	0	0	165	165
	37			WBR	0	0	0		0	0	0	190	190
	37			NBL	90	177	235		235	0	235	(165)	70
	37		NB	NBT	575	904	1,000		1,000	(105)	895	(190)	705
	37			NBR	0	0	0		0	0	0	75	75
	37			SBL	0	0	0		0	0	0	125	125
	37		SB	SBT	760	1,441	1,440		1,440	(195)	1,245	(125)	1,120
	37			SBR	265	347	350		350	(25)	325	0	325
			TEV		**1,935**	**3,278**	**3,605**	**0**	**3,605**	**(325)**	**3,280**	**270**	**3,550**

Project: South Hillsboro Focus Area Plan
Job #: ODOT0000-0737
Subject: **PM Turning Movement Volumes**
Created: 7/21/2012
Rev. Date: 3/5/2013

Table 2: 2035 Link Volume Calculations for the PM Peak Period

Road	From	To	Direction	Volumes 2011	Model 2010	Interpolated Model 2011	Model 2035	2011-2035 Model Comparison: Annual Growth	Total Growth	Volume Difference	2035 Volume Estimates: Difference Volume	Growth Volume	Absolute Difference	Average	Forecast Used	Method Used	Comments
River Road	South of TV Hwy	TV Hwy	NB	400	392	390	354	-0.4%	-9.3%	-36	364	363	0%	363	**363**	Average of Difference and Growth	
	TV Hwy	South of TV Hwy	SB	435	508	522	848	2.7%	64.3%	326	761	714	6%	738	**738**	Average of Difference and Growth	
	TV Hwy	North of TV Hwy	NB	235	160	158	104	-1.4%	-33.6%	-54	181	156	15%	169	**181**	Difference Method	Absolute difference >10% --> Used difference only
	North of TV Hwy	TV Hwy	SB	150	206	211	326	2.3%	55.9%	115	265	234	13%	250	**265**	Difference Method	Absolute difference >10% --> Used difference only
Minter Bridge@Cypress	South of River Road	River Road	NB	280	284	291	451	2.4%	56.5%	160	440	438	1%	439	**439**	Average of Difference and Growth	
	River Road	South of River Road	SB	360	390	397	570	1.8%	44.3%	173	533	520	3%	526	**526**	Average of Difference and Growth	
	River Road	TV Hwy	NB	500	395	399	506	1.1%	27.0%	107	607	635	5%	621	**621**	Average of Difference and Growth	
	TV Hwy	River Road	SB	505	485	491	642	1.3%	31.1%	151	656	662	1%	659	**659**	Average of Difference and Growth	
	TV Hwy	North of TV Hwy	NB	455	395	396	418	0.2%	5.6%	22	477	480	1%	479	**479**	Average of Difference and Growth	
	North of TV Hwy	TV Hwy	SB	505	609	615	753	0.9%	22.7%	138	643	620	4%	631	**631**	Average of Difference and Growth	
Brookwood Blvd	Witch Hazel	TV Hwy	NB	360	396	401	530	1.4%	32.5%	129	489	477	2%	483	**483**	Average of Difference and Growth	
	TV Hwy	Witch Hazel	SB	445	469	492	1052	5.0%	119.3%	560	1005	976	3%	990	**990**	Average of Difference and Growth	
	TV Hwy	Frewing	NB	515	558	563	672	0.8%	19.6%	109	624	616	1%	620	**620**	Average of Difference and Growth	
	Frewing	TV Hwy	SB	570	557	566	791	1.7%	40.3%	225	795	800	1%	797	**797**	Average of Difference and Growth	
Century/234th Ave	Alexander	TV Hwy	NB	205	193	201	388	4.0%	97.0%	187	392	404	3%	398	**392**	Difference Method	To be consistent with method used for opposing direction
	TV Hwy	Alexander	SB	240	191	210	677	10.2%	244.3%	467	707	826	16%	766	**707**	Difference Method	Absolute difference >10% --> Used difference only
	TV Hwy	Johnson	NB	250	411	415	511	1.0%	23.4%	96	346	308	11%	327	**346**	Difference Method	Absolute difference >10% --> Used difference only
	Johnson	TV Hwy	SB	310	279	290	554	3.9%	94.6%	264	574	603	5%	589	**574**	Difference Method	To be consistent with method used for opposing direction
229th/67th	Alexander	TV Hwy	NB	120	232	237	351	2.1%	49.2%	114	234	179	27%	207	**234**	Difference Method	Absolute difference >10% --> Used difference only
	TV Hwy	Alexander	SB	85	399	407	590	1.9%	46.0%	183	268	124	74%	196	**268**	Difference Method	Absolute difference >10% --> Used difference only
	TV Hwy	Johnson	NB	145	33	36	109	9.2%	221.1%	73	218	466	72%	342	**218**	Difference Method	Absolute difference >10% --> Used difference only
Cornelius Pass	South of TV Hwy	TV Hwy	NB	3	1	1	777	3104.0%	74496.0%	776	779	2238	97%	1508	**779**	Difference Method	Absolute difference >10% --> Used difference only
	TV Hwy	South of TV Hwy	SB	3	1	1	1674	6692.0%	160608.0%	1673	1676	4821	97%	3249	**1676**	Difference Method	Absolute difference >10% --> Used difference only
	TV Hwy	Johnson	NB	410	531	545	873	2.6%	61.8%	328	738	664	11%	701	**738**	Difference Method	Absolute difference >10% --> Used difference only
	Johnson	TV Hwy	SB	695	651	690	1616	5.9%	142.3%	926	1621	1684	4%	1653	**1621**	Difference Method	To be consistent with method used for opposing direction
	Johnson	North of Johnson	NB	205	438	453	825	3.5%	84.8%	372	577	379	41%	478	**577**	Difference Method	Absolute difference >10% --> Used difference only
	North of Johnson	Johnson	SB	510	630	664	1468	5.3%	127.7%	804	1314	1161	12%	1238	**1314**	Difference Method	Absolute difference >10% --> Used difference only
209th Ave	South of Farmington	Farmington	NB	235	370	373	451	0.9%	21.0%	78	313	284	10%	299	**299**	Average of Difference and Growth	
	Farmington	South of Farmington	SB	355	452	461	682	2.0%	48.8%	221	576	528	9%	552	**552**	Average of Difference and Growth	
	Farmington	Rosedale	NB	460	427	445	874	4.2%	100.5%	429	889	922	4%	906	**906**	Average of Difference and Growth	
	Rosedale	Farmington	SB	620	579	602	1160	4.0%	96.3%	558	1178	1217	3%	1198	**1198**	Average of Difference and Growth	
	Blanton	TV Hwy	NB	445	433	437	534	0.9%	22.4%	97	542	545	0%	543	**543**	Average of Difference and Growth	
	TV Hwy	Blanton	SB	765	580	591	843	1.8%	43.5%	252	1017	1098	8%	1058	**1058**	Average of Difference and Growth	
	TV Hwy	Alexander	NB	280	385	388	455	0.7%	17.5%	67	347	329	5%	338	**338**	Average of Difference and Growth	To be consistent with method used for opposing direction
	Alexander	TV Hwy	SB	280	388	402	738	3.6%	86.6%	336	616	522	16%	569	**616**	Difference Method	Absolute difference >10% --> Used difference only
198th Ave	Farmington	North of Farmington	NB	205	339	350	605	3.1%	75.3%	255	460	359	25%	410	**460**	Difference Method	Absolute difference >10% --> Used difference only
	North of Farmington	Farmington	SB	245	399	405	545	1.5%	35.1%	140	385	331	15%	358	**385**	Difference Method	Absolute difference >10% --> Used difference only
	South of Kinnaman (sout	Kinnaman (south)	NB	265	170	173	233	1.5%	35.6%	60	325	359	10%	342	**342**	Average of Difference and Growth	
	Kinnaman (south)	South of Kinnaman (south)	SB	305	435	439	523	0.8%	19.4%	84	389	364	7%	377	**377**	Average of Difference and Growth	
	Kinnaman (south)	Kinnaman (north)	NB	315	269	277	472	3.0%	72.4%	195	510	543	6%	527	**527**	Average of Difference and Growth	
	Kinnaman (north)	Kinnaman (south)	SB	465	576	583	748	1.2%	28.7%	165	630	598	5%	614	**614**	Average of Difference and Growth	
	Kinnaman (north)	North of Kinnaman (north)	NB	460	398	402	494	1.0%	23.2%	92	552	567	3%	559	**559**	Average of Difference and Growth	
	North of Kinnaman (north	Kinnaman (north)	SB	695	654	656	708	0.3%	7.9%	52	747	750	0%	748	**748**	Average of Difference and Growth	
	South of Blanton (south)	Blanton (south)	NB	270	398	402	494	1.0%	23.2%	92	362	333	9%	347	**347**	Average of Difference and Growth	
	Blanton (south)	South of Blanton (south)	SB	355	654	656	708	0.3%	7.9%	52	407	383	6%	395	**395**	Average of Difference and Growth	
	Blanton (south)	Blanton (north)	NB	250	553	557	663	0.8%	19.1%	106	356	298	18%	327	**356**	Difference Method	Absolute difference >10% --> Used difference only
	Blanton (north)	Blanton (south)	SB	490	651	659	839	1.2%	27.7%	180	670	626	7%	648	**670**	Difference Method	To be consistent with method used for opposing direction
	Blanton (north)	TV Hwy	NB	415	485	486	515	0.2%	5.9%	29	444	440	1%	442	**442**	Average of Difference and Growth	
	TV Hwy	Blanton (north)	SB	525	592	596	683	0.6%	14.8%	87	612	602	2%	607	**607**	Average of Difference and Growth	
	TV Hwy	Alexander	NB	420	427	431	538	1.0%	25.0%	107	527	525	0%	526	**526**	Average of Difference and Growth	
	Alexander	TV Hwy	SB	430	400	413	719	3.2%	76.6%	306	736	759	3%	748	**748**	Average of Difference and Growth	
Farmington Rd	West of 209th	209th	EB	340	371	385	724	3.8%	91.3%	339	679	651	4%	665	**665**	Average of Difference and Growth	
	209th	East of 209th	EB	445	490	509	955	3.8%	91.1%	446	891	850	5%	871	**871**	Average of Difference and Growth	
	East of 209th	209th	WB	485	464	484	971	4.4%	104.9%	487	972	994	2%	983	**983**	Average of Difference and Growth	
	209th	West of 209th	WB	420	416	431	795	3.6%	87.5%	364	784	787	0%	786	**786**	Average of Difference and Growth	
	West of 198th	198th	EB	655	536	554	980	3.3%	79.5%	426	1081	1176	8%	1129	**1129**	Average of Difference and Growth	
	198th	East of 198th	EB	600	611	631	1118	3.3%	79.7%	487	1087	1078	1%	1082	**1082**	Average of Difference and Growth	
	East of 198th	198th	WB	680	645	677	1448	5.0%	119.5%	771	1451	1493	3%	1472	**1472**	Average of Difference and Growth	
	198th	West of 198th	WB	635	630	655	1250	3.9%	94.5%	595	1230	1235	0%	1233	**1233**	Average of Difference and Growth	
	West of 185th	185th	EB	655	576	598	1135	3.9%	93.2%	537	1192	1265	6%	1228	**1228**	Average of Difference and Growth	
	185th	East of 185th	EB	570	526	545	1001	3.6%	86.7%	456	1026	1064	4%	1045	**1045**	Average of Difference and Growth	
	East of 185th	185th	WB	815	702	730	1393	3.9%	94.5%	663	1478	1585	7%	1532	**1532**	Average of Difference and Growth	
	185th	West of 185th	WB	1000	796	831	1669	4.4%	105.3%	838	1838	2053	11%	1945	**1838**	Difference Method	Absolute difference >10% --> Used difference only

Project: South Hillsboro Focus Area Plan
Job #: ODOT0000-0737
Subject: **PM Turning Movement Volumes**
Created: 7/21/2012
Rev. Date: 3/5/2013

Table 2: 2035 Link Volume Calculations for the PM Peak Period

Road	From	To	Direction	Volumes 2011	Model 2010	Interpolated Model 2011	Model 2035	2011-2035 Model Comparison: Annual Growth	Total Growth	Volume Difference	2035 Volume Estimates: Difference Volume	Growth Volume	Absolute Difference	Average	Forecast Used	Method Used	Comments
185th Ave	South of Farmington	Farmington	NB	510	551	557	709	1.1%	27.5%	152	662	650	2%	656	**656**	Average of Difference and Growth	
	Farmington	South of Farmington	SB	560	607	623	1005	2.6%	62.9%	382	942	912	3%	927	**927**	Average of Difference and Growth	
	Farmington	Rosa	NB	400	430	440	676	2.3%	54.9%	236	636	620	3%	628	**628**	Average of Difference and Growth	
	Rosa	Farmington	SB	550	531	554	1114	4.4%	105.4%	560	1110	1130	2%	1120	**1120**	Average of Difference and Growth	
	South of Kinnaman	Kinnaman	NB	455	444	456	755	2.8%	67.2%	299	754	761	1%	757	**757**	Average of Difference and Growth	
	Kinnaman	South of Kinnaman	SB	650	590	622	1388	5.4%	129.8%	766	1416	1494	5%	1455	**1455**	Average of Difference and Growth	
	Kinnaman	North of Kinnaman	NB	575	515	526	794	2.2%	52.0%	268	843	874	4%	858	**858**	Average of Difference and Growth	
	North of Kinnaman	Kinnaman	SB	750	683	714	1457	4.5%	108.8%	743	1493	1566	5%	1529	**1529**	Average of Difference and Growth	
	South of Blanton (south)	Blanton (south)	NB	575	515	526	794	2.2%	52.0%	268	843	874	4%	858	**843**	Difference Method	To be consistent with method used for opposing direction
	Blanton (south)	South of Blanton (south)	SB	920	683	714	1457	4.5%	108.8%	743	1663	1921	14%	1792	**1663**	Difference Method	Absolute difference >10% --> Used difference only
	Blanton (south)	Blanton (north)	NB	665	565	581	966	2.8%	68.1%	385	1050	1118	6%	1084	**1050**	Difference Method	To be consistent with method used for opposing direction
	Blanton (north)	Blanton (south)	SB	960	774	804	1529	3.9%	93.6%	725	1685	1859	10%	1772	**1685**	Difference Method	Absolute difference >10% --> Used difference only
	Blanton (north)	N of Blanton (north)	NB	710	733	748	1113	2.1%	49.8%	365	1075	1063	1%	1069	**1069**	Average of Difference and Growth	
	N of Blanton (north)	Blanton (north)	SB	1025	969	997	1680	2.9%	70.4%	683	1708	1747	2%	1727	**1727**	Average of Difference and Growth	
	S of TV Hwy	TV Hwy	NB	705	733	748	1113	2.1%	49.8%	365	1070	1056	1%	1063	**1063**	Average of Difference and Growth	
	TV Hwy	S of TV Hwy	SB	925	969	997	1680	2.9%	70.4%	683	1608	1577	2%	1592	**1592**	Average of Difference and Growth	
	TV Hwy	Alexander	NB	735	1094	1103	1327	0.9%	20.4%	224	959	885	8%	922	**922**	Average of Difference and Growth	
	Alexander	TV Hwy	SB	915	1264	1282	1717	1.4%	34.4%	435	1350	1230	9%	1290	**1290**	Average of Difference and Growth	
Kinnaman (south)	West of 198th	198th	EB	95	103	111	308	8.0%	191.1%	197	292	277	5%	284	**284**	Average of Difference and Growth	
	198th	West of 198th	WB	95	144	150	294	4.2%	100.0%	144	239	190	23%	215	**239**	Difference Method	Absolute difference >10% --> Used difference only
Kinnaman (north)	East of 198th	198th	WB	190	236	247	509	4.6%	111.1%	262	452	401	12%	427	**452**	Difference Method	Absolute difference >10% --> Used difference only
	198th	East of 198th	EB	275	185	195	447	5.7%	136.0%	252	527	649	21%	588	**527**	Difference Method	Absolute difference >10% --> Used difference only
Kinnaman	West of 185th	185th	EB	405	279	291	579	4.3%	103.2%	288	693	823	17%	758	**693**	Difference Method	Absolute difference >10% --> Used difference only
	185th	West of 185th	WB	360	349	359	597	2.8%	68.2%	238	598	606	1%	602	**602**	Average of Difference and Growth	
	185th	East of 185th	EB	480	392	402	643	2.6%	61.5%	241	721	775	7%	748	**748**	Average of Difference and Growth	
	East of 185th	185th	WB	455	439	447	634	1.8%	42.6%	187	642	649	1%	646	**646**	Average of Difference and Growth	
Johnson St	West of Cornelius pass	Cornelius Pass	EB	155	114	122	323	7.3%	176.0%	201	356	428	18%	392	**356**	Difference Method	Absolute difference >10% --> Used difference only
	Cornelius Pass	West of Cornelius pass	WB	155	173	174	204	0.7%	17.2%	30	185	182	2%	183	**185**	Difference Method	To be consistent with method used for opposing direction
	Cornelius Pass	East of Cornelius Pass	EB	200	229	234	360	2.3%	54.9%	126	326	310	5%	318	**318**	Average of Difference and Growth	
	East of Cornelius Pass	Cornelius Pass	WB	180	216	221	341	2.3%	55.6%	120	300	280	7%	290	**290**	Average of Difference and Growth	
TV Highway	River Road	Cypress/Minter Br	EB	1220	1053	1066	1385	1.3%	30.3%	319	1539	1589	3%	1564	**1564**	Average of Difference and Growth	
	Cypress/Minter Br	River Road	WB	1105	932	935	1008	0.3%	7.8%	73	1178	1192	1%	1185	**1185**	Average of Difference and Growth	
	Cypress/Minter Br	E of Cypress/Minter Br	EB	1220	1379	1393	1735	1.0%	24.8%	342	1562	1522	3%	1542	**1542**	Average of Difference and Growth	
	E of Cypress/Minter Br	Cypress/Minter Br	WB	1060	1134	1135	1158	0.1%	2.0%	23	1083	1082	0%	1082	**1082**	Average of Difference and Growth	
	W of Brookwood Blvd	Brookwood Blvd	EB	1405	1379	1393	1735	1.0%	24.8%	342	1747	1753	0%	1750	**1750**	Average of Difference and Growth	
	Brookwood Blvd	W of Brookwood Blvd	WB	1340	1134	1135	1158	0.1%	2.0%	23	1363	1367	0%	1365	**1365**	Average of Difference and Growth	
	Brookwood Blvd	E of Brookwood	EB	1625	1504	1511	1669	0.4%	10.5%	158	1783	1796	1%	1790	**1790**	Average of Difference and Growth	
	E of Brookwood	Brookwood Blvd	WB	1590	1334	1340	1496	0.5%	11.7%	156	1746	1775	2%	1760	**1760**	Average of Difference and Growth	
	W of Century/234th	Century/234th	EB	1590	1425	1436	1701	0.8%	18.6%	265	1855	1886	2%	1870	**1870**	Average of Difference and Growth	
	Century/234th	W of Century/234th	WB	1540	1228	1229	1244	0.1%	1.3%	15	1555	1559	0%	1557	**1557**	Average of Difference and Growth	
	Century/234th	E of Century/234th	EB	1570	1445	1449	1548	0.3%	6.8%	99	1669	1677	1%	1673	**1673**	Average of Difference and Growth	
	E of Century/234th	Century/234th	WB	1495	1378	1376	1336	-0.1%	-2.9%	-40	1455	1451	0%	1453	**1453**	Average of Difference and Growth	
	W of 229th/67th	229th/67th	EB	1475	1445	1449	1548	0.3%	6.8%	99	1574	1576	0%	1575	**1575**	Average of Difference and Growth	
	229th/67th	W of 229th/67th	WB	1475	1378	1376	1336	-0.1%	-2.9%	-40	1435	1432	0%	1433	**1433**	Average of Difference and Growth	
	229th/67th	E of 229th/67th	EB	1610	1458	1462	1558	0.3%	6.6%	96	1706	1716	1%	1711	**1711**	Average of Difference and Growth	
	E of 229th/67th	229th/67th	WB	1545	1444	1442	1403	-0.1%	-2.7%	-39	1506	1503	0%	1504	**1504**	Average of Difference and Growth	
	W of Corn Pass	Cornelius Pass	EB	1501	1458	1462	1558	0.3%	6.6%	96	1597	1600	0%	1598	**1598**	Average of Difference and Growth	
	Cornelius Pass	W of Corn Pass	WB	1636	1444	1442	1403	-0.1%	-2.7%	-39	1597	1591	0%	1594	**1594**	Average of Difference and Growth	
	Cornelius Pass	E fo Cornelius pass	EB	1851	1715	1713	1666	-0.1%	-2.7%	-47	1804	1800	0%	1802	**1802**	Average of Difference and Growth	
	E fo Cornelius pass	Cornelius Pass	WB	1706	1581	1584	1666	0.2%	5.2%	82	1788	1794	0%	1791	**1791**	Average of Difference and Growth	
	W of 209th	209th	EB	1825	1715	1713	1666	-0.1%	-2.7%	-47	1778	1775	0%	1776	**1776**	Average of Difference and Growth	
	209th	W of 209th	WB	1780	1581	1584	1666	0.2%	5.2%	82	1862	1872	1%	1867	**1867**	Average of Difference and Growth	
	209th	E of 209th	EB	1470	1470	1478	1678	0.6%	13.6%	200	1670	1670	0%	1670	**1670**	Average of Difference and Growth	
	E of 209th	209th	WB	1745	1479	1488	1704	0.6%	14.6%	216	1961	2000	2%	1980	**1980**	Average of Difference and Growth	
	W of 198th	198th	EB	1515	1470	1478	1678	0.6%	13.6%	200	1715	1721	0%	1718	**1718**	Average of Difference and Growth	
	198th	W of 198th	WB	1645	1479	1488	1704	0.6%	14.6%	216	1861	1885	1%	1873	**1873**	Average of Difference and Growth	
	198th	E of 198th	EB	1500	1563	1573	1816	0.6%	15.5%	243	1743	1733	1%	1738	**1738**	Average of Difference and Growth	
	E of 198th	198th	WB	1730	1706	1711	1829	0.3%	6.9%	118	1848	1850	0%	1849	**1849**	Average of Difference and Growth	
	W of 185th	185th	EB	1500	1562	1572	1816	0.7%	15.6%	244	1744	1734	1%	1739	**1739**	Average of Difference and Growth	
	185th	W of 185th	WB	1800	1708	1713	1829	0.3%	6.8%	116	1916	1922	0%	1919	**1919**	Average of Difference and Growth	
	185th	E of 185th	EB	1445	1726	1731	1859	0.3%	7.4%	128	1573	1552	1%	1562	**1562**	Average of Difference and Growth	
	E of 185th	185th	WB	1785	1918	1919	1950	0.1%	1.6%	31	1816	1814	0%	1815	**1815**	Average of Difference and Growth	

Project: South Hillsboro Focus Area Plan
Job #: ODOT0000-0737
Subject: **PM Turning Movement Volumes**
Created: 7/21/2012
Rev. Date: 3/5/2013

Table 2: 2035 Link Volume Calculations for the PM Peak Period

Road	From	To	Direction	Volumes 2011	Model 2010	Interpolated Model 2011	Model 2035	2011-2035 Model Comparison: Annual Growth	Total Growth	Volume Difference	2035 Volume Estimates: Difference Volume	Growth Volume	Absolute Difference	Average	Forecast Used	Method Used	Comments
River Road	W of Minter Br	Minter Br	EB	530	440	455	815	3.4%	81.8%	360	890	964	8%	927	**927**	Average of Difference and Growth	
	Minter Br	W of Minter Br	WB	410	410	410	411	0.0%	0.2%	1	411	411	0%	411	**411**	Average of Difference and Growth	
	Minter Br	E fo Minter Br	EB	635	368	383	740	4.0%	97.0%	357	992	1251	23%	1122	**992**	Difference Method	Absolute difference >10% --> Used difference only
	E fo Minter Br	Minter Br	WB	535	354	353	318	-0.4%	-9.8%	-35	500	483	4%	492	**500**	Difference Method	To be consistent with method used for opposing direction
Blanton (south)	209th	198th	EB	280	280	278	234	-0.7%	-15.8%	-44	236	236	0%	236	**236**	Average of Difference and Growth	Road already present although not in 2010 model
	198th	209th	WB	435	435	431	340	-0.9%	-21.0%	-91	344	344	0%	344	**344**	Average of Difference and Growth	
	185th	E of 185th	EB	235	130	134	237	3.3%	79.0%	103	338	421	22%	379	**338**	Difference Method	Absolute difference >10% --> Used difference only
	E of 185th	185th	WB	285	88	99	367	12.7%	304.4%	268	553	1152	70%	853	**553**	Difference Method	Absolute difference >10% --> Used difference only
Blanton (north)	198th	E of 198th	EB	185	156	162	303	3.8%	90.5%	141	326	352	8%	339	**326**	Difference Method	To be consistent with method used for opposing direction
	E of 198th	198th	WB	315	165	171	311	3.5%	84.9%	140	455	583	25%	519	**455**	Difference Method	Absolute difference >10% --> Used difference only
	W of 185th	185th	EB	245	154	160	311	4.1%	97.9%	151	396	485	20%	440	**396**	Difference Method	Absolute difference >10% --> Used difference only
	185th	W of 185th	WB	355	184	191	360	3.8%	91.8%	169	524	681	26%	602	**524**	Difference Method	Absolute difference >10% --> Used difference only

Intersection does not currently exist

Greater than 10% difference between difference and growth methods

Insert data into cells with blue font : HEADER INFO, BASE YEAR TURN MOVEMENTS, FUTURE YEAR LINK VOLUMES

OUTPUT DATA IS IN BOLD PRINT.

INTERSECTION :	TV Hwy @ Cypress/Minter Bridge		
SCENARIO :	2035 with 2012 UGB Buildout - With South Hillsboro		
PEAK HOUR :	PM		
BASE YEAR :	2011	EAST-WEST ROAD:	TV Hwy
FUTURE YEAR :	2035	NORTH-SOUTH ROAD:	Cypress/Minter Bridge

	PEAK HOUR TURNING MOVEMENTS											
	NORTHBOUND			SOUTHBOUND			EASTBOUND			WESTBOUND		
YEAR	Left	Thru	Right	Left	Thru	Right	Left	Thru	Right	Left	Thru	Right
BASE YEAR	135	245	120	115	265	125	120	985	115	125	845	90
OUTPUT FUTURE	**183**	**274**	**158**	**131**	**348**	**146**	**129**	**1,252**	**168**	**142**	**856**	**75**

	PEAK HOUR DIRECTIONAL LINK VOLUMES									
	SOUTHLEG		NORTHLEG		WESTLEG		EASTLEG		ALL LEGS	
YEAR	In	Out	In	Out	In	Out	In	Out	In	Out
BASE YEAR	500	505	505	455	1,220	1,105	1,060	1,220	3,285	3,285
OUTPUT FUTURE	**615**	**659**	**626**	**479**	**1,550**	**1,185**	**1,073**	**1,542**	3,864	3,864
INPUT FUTURE	621	659	631	479	1,564	1,185	1,082	1,542	3,898	3,864
									-34.07	

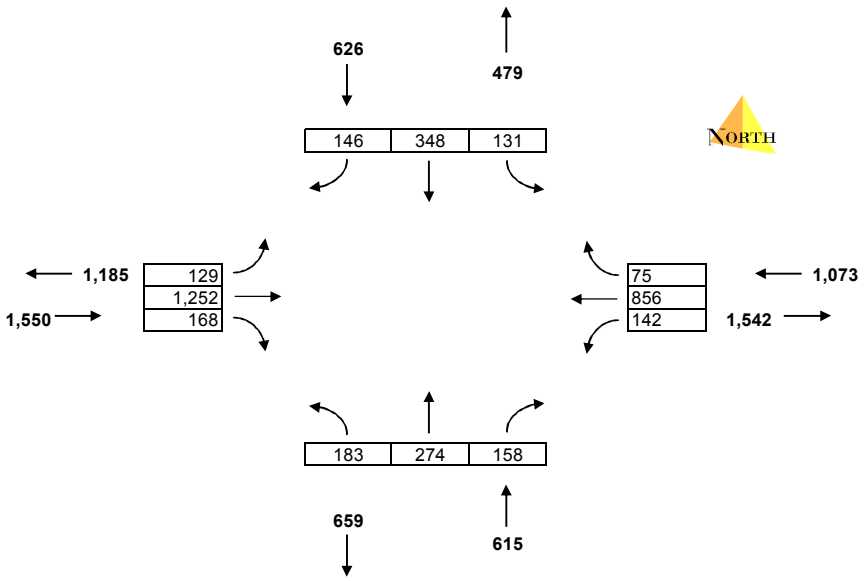

* Turn Calculation Output from NCHRP 255

Insert data into cells with blue font : HEADER INFO, BASE YEAR TURN MOVEMENTS, FUTURE YEAR LINK VOLUMES

OUTPUT DATA IS IN BOLD PRINT.

INTERSECTION :	TV Hwy @ Brookwood		
SCENARIO :	2035 with 2012 UGB Buildout - With South Hillsboro		
PEAK HOUR :	PM		
BASE YEAR :	2011	EAST-WEST ROAD:	TV Hwy
FUTURE YEAR :	2035	NORTH-SOUTH ROAD:	Brookwood

	PEAK HOUR TURNING MOVEMENTS											
	NORTHBOUND			SOUTHBOUND			EASTBOUND			WESTBOUND		
YEAR	Left	Thru	Right	Left	Thru	Right	Left	Thru	Right	Left	Thru	Right
BASE YEAR	45	165	150	230	230	110	140	1,245	20	195	1,185	210
OUTPUT FUTURE	**75**	**235**	**169**	**165**	**512**	**117**	**207**	**1,456**	**73**	**405**	**1,173**	**177**

	PEAK HOUR DIRECTIONAL LINK VOLUMES									
	SOUTHLEG		NORTHLEG		WESTLEG		EASTLEG		ALL LEGS	
YEAR	In	Out	In	Out	In	Out	In	Out	In	Out
BASE YEAR	360	445	570	515	1,405	1,340	1,590	1,625	3,925	3,925
OUTPUT FUTURE	**480**	**990**	**794**	**620**	**1,736**	**1,365**	**1,756**	**1,790**	4,765	4,765
INPUT FUTURE	483	990	797	620	1,750	1,365	1,760	1,790	4,790	4,765
									-24.99	

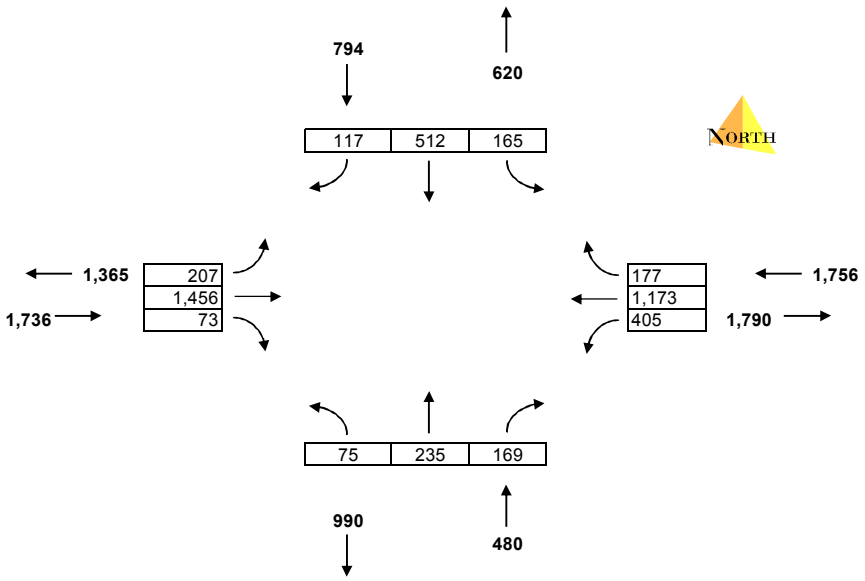

* Turn Calculation Output from NCHRP 255

Insert data into cells with blue font : HEADER INFO, BASE YEAR TURN MOVEMENTS, FUTURE YEAR LINK VOLUMES

OUTPUT DATA IS IN BOLD PRINT.

INTERSECTION :	TV Hwy @ Century Dr/234th		
SCENARIO :	2035 with 2012 UGB Buildout - With South Hillsboro		
PEAK HOUR :	PM		
BASE YEAR :	2011	EAST-WEST ROAD:	TV Hwy
FUTURE YEAR :	2035	NORTH-SOUTH ROAD:	Century Drve/234th

	PEAK HOUR TURNING MOVEMENTS											
	NORTHBOUND			SOUTHBOUND			EASTBOUND			WESTBOUND		
YEAR	Left	Thru	Right	Left	Thru	Right	Left	Thru	Right	Left	Thru	Right
BASE YEAR	50	60	95	85	80	145	120	1,390	80	80	1,345	70
OUTPUT FUTURE	**114**	**125**	**152**	**88**	**271**	**215**	**162**	**1,433**	**269**	**167**	**1,228**	**59**

	PEAK HOUR DIRECTIONAL LINK VOLUMES									
	SOUTHLEG		NORTHLEG		WESTLEG		EASTLEG		ALL LEGS	
YEAR	In	Out	In	Out	In	Out	In	Out	In	Out
BASE YEAR	205	240	310	250	1,590	1,540	1,495	1,570	3,600	3,600
OUTPUT FUTURE	**391**	**707**	**573**	**346**	**1,865**	**1,557**	**1,454**	**1,673**	4,283	4,283
INPUT FUTURE	392	707	574	346	1,870	1,557	1,453	1,673	4,289	4,283
									-6.44	

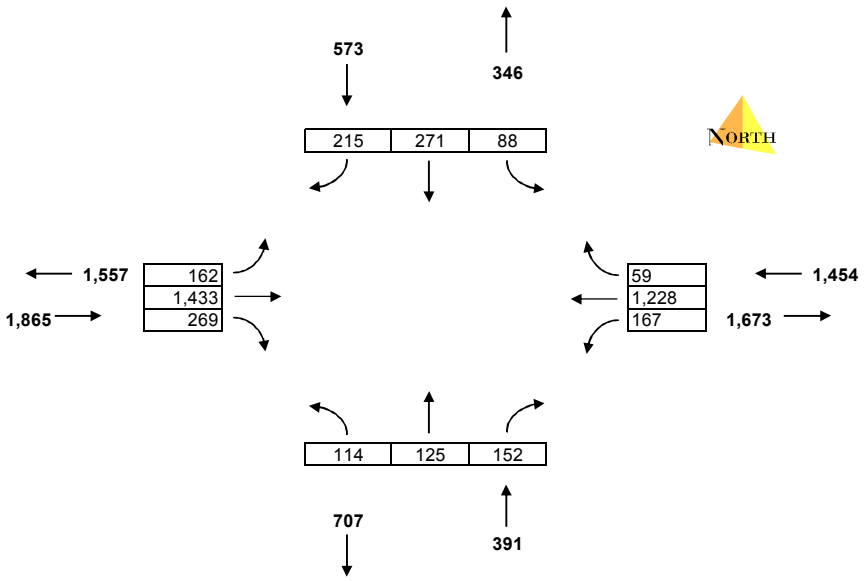

* Turn Calculation Output from NCHRP 255

Insert data into cells with blue font : HEADER INFO, BASE YEAR TURN MOVEMENTS, FUTURE YEAR LINK VOLUMES

OUTPUT DATA IS IN BOLD PRINT.

INTERSECTION :	TV Hwy @ Century Dr/229th		
SCENARIO :	2035 with 2012 UGB Buildout - With South Hillsboro		
PEAK HOUR :	PM		
BASE YEAR :	2011	EAST-WEST ROAD:	TV Hwy
FUTURE YEAR :	2035	NORTH-SOUTH ROAD:	SW 67th/229th

	PEAK HOUR TURNING MOVEMENTS											
	NORTHBOUND			SOUTHBOUND			EASTBOUND			WESTBOUND		
YEAR	Left	Thru	Right	Left	Thru	Right	Left	Thru	Right	Left	Thru	Right
BASE YEAR	20	40	60	115	35	25	20	1,435	20	30	1,430	85
OUTPUT FUTURE	**42**	**96**	**97**	**139**	**134**	**39**	**30**	**1,475**	**65**	**69**	**1,352**	**92**

	PEAK HOUR DIRECTIONAL LINK VOLUMES									
	SOUTHLEG		NORTHLEG		WESTLEG		EASTLEG		ALL LEGS	
YEAR	In	Out	In	Out	In	Out	In	Out	In	Out
BASE YEAR	120	85	175	145	1,475	1,475	1,545	1,610	3,315	3,315
OUTPUT FUTURE	**234**	**268**	**312**	**218**	**1,570**	**1,433**	**1,514**	**1,711**	3,631	3,631
INPUT FUTURE	234	268	312	218	1,575	1,433	1,504	1,711	3,626	3,631
									4.895	

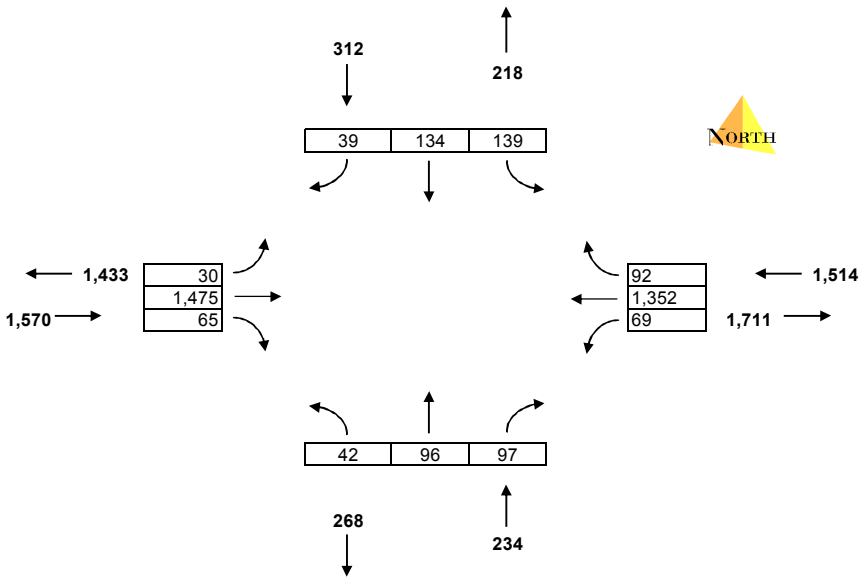

* Turn Calculation Output from NCHRP 255

Insert data into cells with blue font : HEADER INFO, BASE YEAR TURN MOVEMENTS, FUTURE YEAR LINK VOLUMES

OUTPUT DATA IS IN BOLD PRINT.

INTERSECTION :	TV Hwy @ Cornelius Pass		
SCENARIO :	2035 with 2012 UGB Buildout - With South Hillsboro		
PEAK HOUR :	PM		
BASE YEAR :	2011	EAST-WEST ROAD:	TV Hwy
FUTURE YEAR :	2035	NORTH-SOUTH ROAD:	Cornelius Pass

	PEAK HOUR TURNING MOVEMENTS											
	NORTHBOUND			SOUTHBOUND			EASTBOUND			WESTBOUND		
YEAR	Left	Thru	Right	Left	Thru	Right	Left	Thru	Right	Left	Thru	Right
BASE YEAR	1	1	1	505	1	185	155	1,345	1	1	1,450	255
OUTPUT FUTURE	**243**	**320**	**219**	**608**	**772**	**247**	**164**	**975**	**465**	**439**	**1,103**	**255**

	PEAK HOUR DIRECTIONAL LINK VOLUMES									
	SOUTHLEG		NORTHLEG		WESTLEG		EASTLEG		ALL LEGS	
YEAR	In	Out	In	Out	In	Out	In	Out	In	Out
BASE YEAR	3	3	691	411	1,501	1,636	1,706	1,851	3,901	3,901
OUTPUT FUTURE	**782**	**1,676**	**1,627**	**738**	**1,604**	**1,594**	**1,797**	**1,802**	5,810	5,810
INPUT FUTURE	779	1,676	1,621	738	1,598	1,594	1,791	1,802	5,790	5,810

20.8

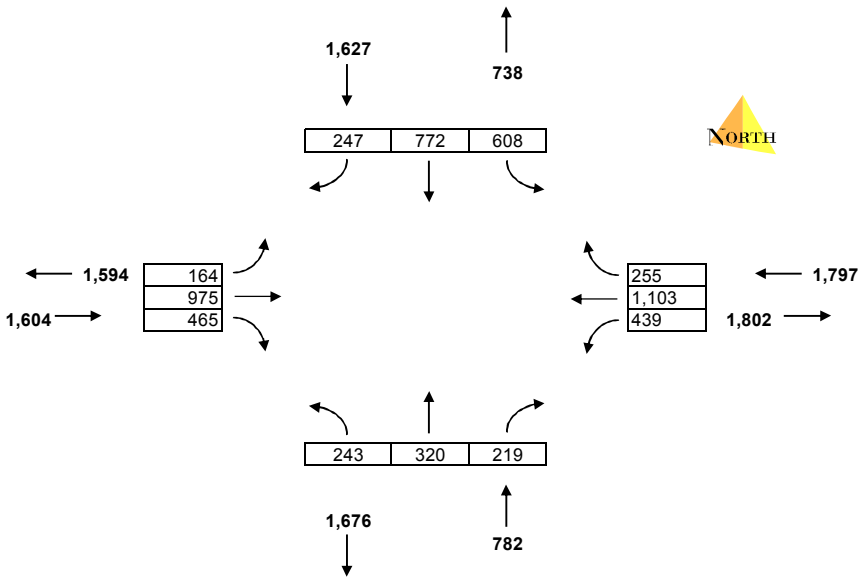

* Turn Calculation Output from NCHRP 255

Insert data into cells with blue font : HEADER INFO, BASE YEAR TURN MOVEMENTS, FUTURE YEAR LINK VOLUMES

OUTPUT DATA IS IN BOLD PRINT.

INTERSECTION :	TV Hwy @ 209th Av e		
SCENARIO :	2035 with 2012 UGB Buildout - With South Hillsboro		
PEAK HOUR :	PM		
BASE YEAR :	2011	EAST-WEST ROAD:	TV Hwy
FUTURE YEAR :	2035	NORTH-SOUTH ROAD:	209

	PEAK HOUR TURNING MOVEMENTS											
	NORTHBOUND			SOUTHBOUND			EASTBOUND			WESTBOUND		
YEAR	Left	Thru	Right	Left	Thru	Right	Left	Thru	Right	Left	Thru	Right
BASE YEAR	170	190	85	30	185	65	30	1,355	440	140	1,545	60
OUTPUT FUTURE	**148**	**230**	**166**	**91**	**440**	**88**	**19**	**1,412**	**359**	**259**	**1,631**	**88**

	PEAK HOUR DIRECTIONAL LINK VOLUMES									
	SOUTHLEG		NORTHLEG		WESTLEG		EASTLEG		ALL LEGS	
YEAR	In	Out	In	Out	In	Out	In	Out	In	Out
BASE YEAR	445	765	280	280	1,825	1,780	1,745	1,470	4,295	4,295
OUTPUT FUTURE	**545**	**1,058**	**619**	**338**	**1,791**	**1,867**	**1,978**	**1,670**	4,932	4,932
INPUT FUTURE	543	1,058	616	338	1,776	1,867	1,980	1,670	4,916	4,932
									16.02	

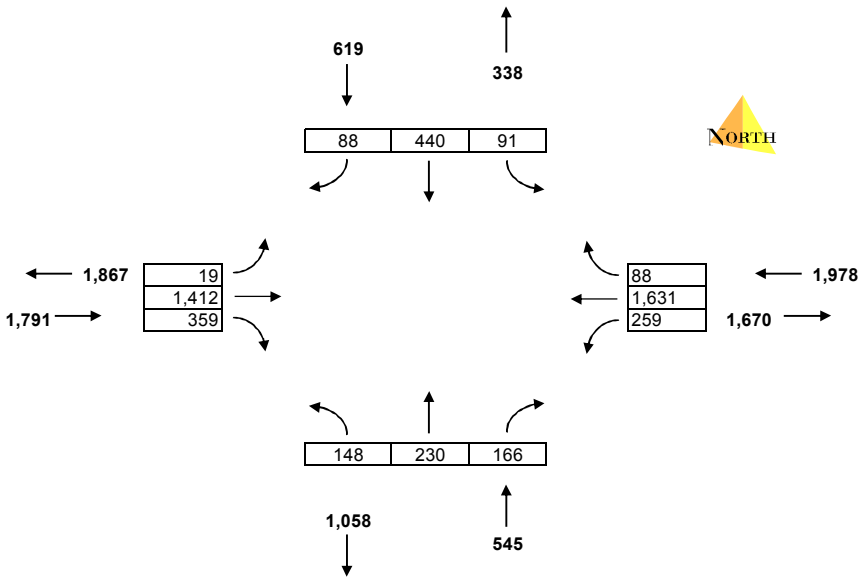

* Turn Calculation Output from NCHRP 255

Insert data into cells with blue font : HEADER INFO, BASE YEAR TURN MOVEMENTS, FUTURE YEAR LINK VOLUMES

OUTPUT DATA IS IN BOLD PRINT.

INTERSECTION :	TV Hwy @ 198th		
SCENARIO :	2035 with 2012 UGB Buildout - With South Hillsboro		
PEAK HOUR :	PM		
BASE YEAR :	2011	EAST-WEST ROAD:	TV Hwy
FUTURE YEAR :	2035	NORTH-SOUTH ROAD:	198

	PEAK HOUR TURNING MOVEMENTS											
	NORTHBOUND			SOUTHBOUND			EASTBOUND			WESTBOUND		
YEAR	Left	Thru	Right	Left	Thru	Right	Left	Thru	Right	Left	Thru	Right
BASE YEAR	255	205	220	140	250	40	75	1,140	300	240	1,350	140
OUTPUT FUTURE	**177**	**168**	**96**	**301**	**307**	**137**	**166**	**1,341**	**201**	**99**	**1,559**	**191**

	PEAK HOUR DIRECTIONAL LINK VOLUMES									
	SOUTHLEG		NORTHLEG		WESTLEG		EASTLEG		ALL LEGS	
YEAR	In	Out	In	Out	In	Out	In	Out	In	Out
BASE YEAR	680	790	430	420	1,515	1,645	1,730	1,500	4,355	4,355
OUTPUT FUTURE	**441**	**607**	**745**	**526**	**1,709**	**1,873**	**1,850**	**1,738**	4,744	4,744
INPUT FUTURE	442	607	748	526	1,718	1,873	1,849	1,738	4,756	4,744
									-11.88	

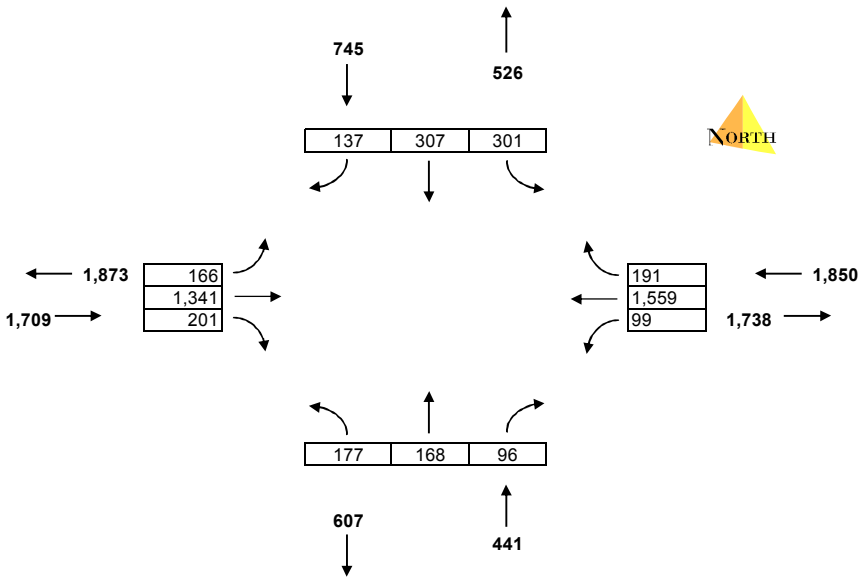

* Turn Calculation Output from NCHRP 255

Insert data into cells with blue font : HEADER INFO, BASE YEAR TURN MOVEMENTS, FUTURE YEAR LINK VOLUMES

OUTPUT DATA IS IN BOLD PRINT.

INTERSECTION :	TV Hwy @ 185th Ave		
SCENARIO :	2035 with 2012 UGB Buildout - With South Hillsboro		
PEAK HOUR :	PM		
BASE YEAR :	2011	EAST-WEST ROAD:	TV Hwy
FUTURE YEAR :	2035	NORTH-SOUTH ROAD:	185

	PEAK HOUR TURNING MOVEMENTS											
	NORTHBOUND			SOUTHBOUND			EASTBOUND			WESTBOUND		
YEAR	Left	Thru	Right	Left	Thru	Right	Left	Thru	Right	Left	Thru	Right
BASE YEAR	190	415	100	220	535	160	180	1,125	195	195	1,450	140
OUTPUT FUTURE	**320**	**611**	**148**	**212**	**921**	**176**	**191**	**1,202**	**372**	**299**	**1,423**	**120**

	PEAK HOUR DIRECTIONAL LINK VOLUMES									
	SOUTHLEG		NORTHLEG		WESTLEG		EASTLEG		ALL LEGS	
YEAR	In	Out	In	Out	In	Out	In	Out	In	Out
BASE YEAR	705	925	915	735	1,500	1,800	1,785	1,445	4,905	4,905
OUTPUT FUTURE	**1,079**	**1,592**	**1,309**	**922**	**1,765**	**1,919**	**1,842**	**1,562**	5,996	5,996
INPUT FUTURE	1,063	1,592	1,290	922	1,739	1,919	1,815	1,562	5,906	5,996
									89.29	

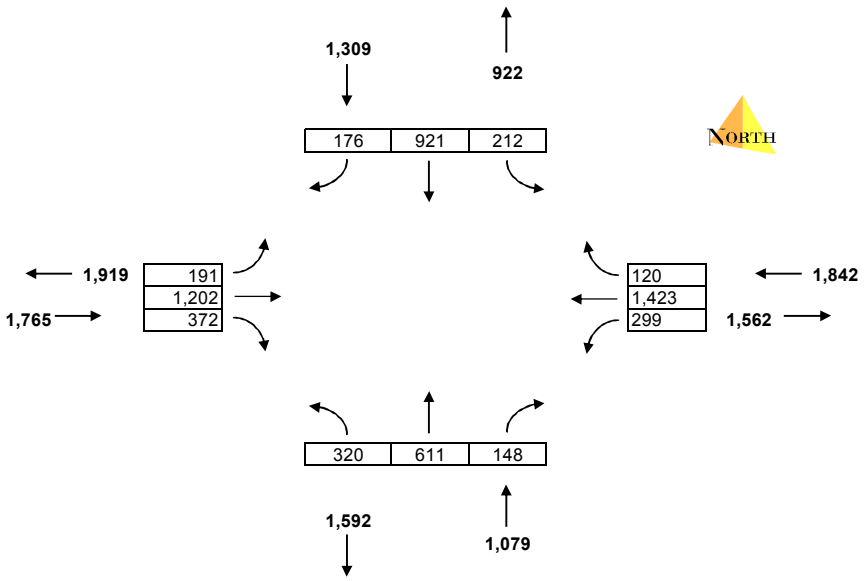

* Turn Calculation Output from NCHRP 255

Insert data into cells with blue font : HEADER INFO, BASE YEAR TURN MOVEMENTS, FUTURE YEAR LINK VOLUMES

OUTPUT DATA IS IN BOLD PRINT.

INTERSECTION :	River Rd @ Minter Bridge		
SCENARIO :	2035 with 2012 UGB Buildout - With South Hillsboro		
PEAK HOUR :	PM		
BASE YEAR :	2011	EAST-WEST ROAD:	River Rd
FUTURE YEAR :	2035	NORTH-SOUTH ROAD:	Minter Br

	PEAK HOUR TURNING MOVEMENTS											
	NORTHBOUND			SOUTHBOUND			EASTBOUND			WESTBOUND		
YEAR	Left	Thru	Right	Left	Thru	Right	Left	Thru	Right	Left	Thru	Right
BASE YEAR	50	195	35	220	220	50	60	380	90	50	310	175
OUTPUT FUTURE	**71**	**322**	**51**	**289**	**311**	**65**	**118**	**652**	**166**	**49**	**276**	**181**

	PEAK HOUR DIRECTIONAL LINK VOLUMES									
	SOUTHLEG		NORTHLEG		WESTLEG		EASTLEG		ALL LEGS	
YEAR	In	Out	In	Out	In	Out	In	Out	In	Out
BASE YEAR	280	360	490	430	530	410	535	635	1,835	1,835
OUTPUT FUTURE	**444**	**526**	**665**	**621**	**936**	**411**	**505**	**992**	2,550	2,550
INPUT FUTURE	439	526	659	621	927	411	500	992	2,525	2,550
									-24.68	

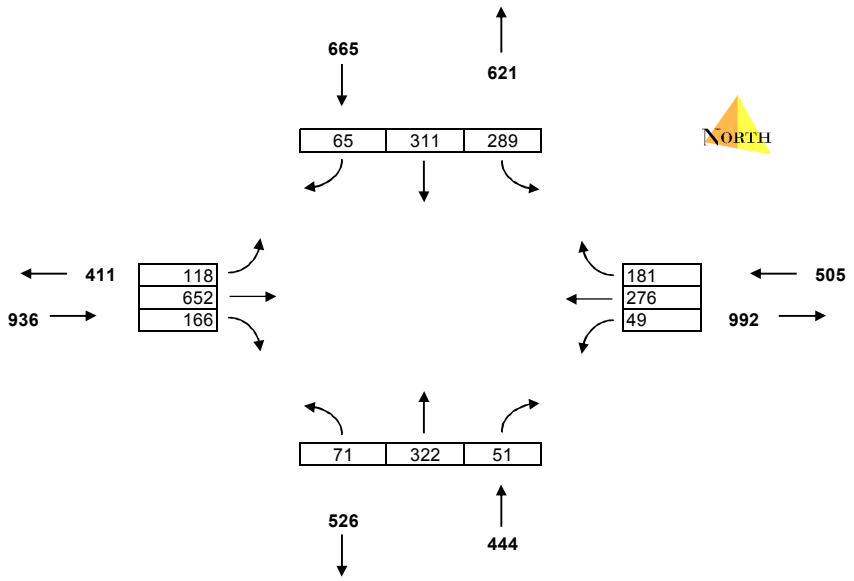

* Turn Calculation Output from NCHRP 255

Insert data into cells with blue font : HEADER INFO, BASE YEAR TURN MOVEMENTS, FUTURE YEAR LINK VOLUMES

OUTPUT DATA IS IN BOLD PRINT.

INTERSECTION :	Farmington @ 209th		
SCENARIO :	2035 with 2012 UGB Buildout - With South Hillsboro		
PEAK HOUR :	PM		
BASE YEAR :	2011	EAST-WEST ROAD:	Farmington
FUTURE YEAR :	2035	NORTH-SOUTH ROAD:	209

	PEAK HOUR TURNING MOVEMENTS											
	NORTHBOUND			SOUTHBOUND			EASTBOUND			WESTBOUND		
YEAR	Left	Thru	Right	Left	Thru	Right	Left	Thru	Right	Left	Thru	Right
BASE YEAR	5	185	45	185	285	150	105	215	20	50	265	170
OUTPUT FUTURE	**5**	**243**	**48**	**427**	**456**	**304**	**237**	**396**	**26**	**71**	**477**	**426**

	PEAK HOUR DIRECTIONAL LINK VOLUMES									
	SOUTHLEG		NORTHLEG		WESTLEG		EASTLEG		ALL LEGS	
YEAR	In	Out	In	Out	In	Out	In	Out	In	Out
BASE YEAR	235	355	620	460	340	420	485	445	1,680	1,680
OUTPUT FUTURE	**296**	**552**	**1,186**	**906**	**659**	**786**	**974**	**871**	3,114	3,114
INPUT FUTURE	299	552	1,198	906	665	786	983	871	3,144	3,114
									-29.24	

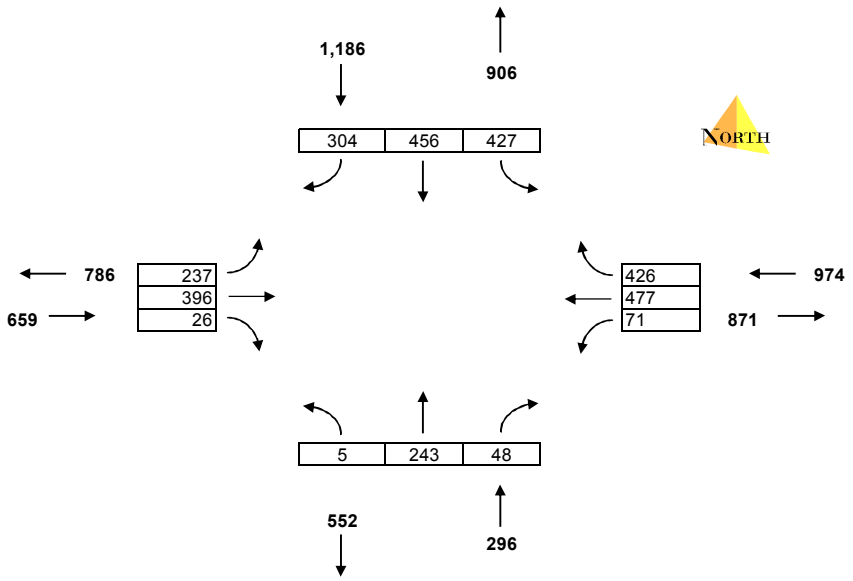

* Turn Calculation Output from NCHRP 255

Insert data into cells with blue font : HEADER INFO, BASE YEAR TURN MOVEMENTS, FUTURE YEAR LINK VOLUMES

OUTPUT DATA IS IN BOLD PRINT.

INTERSECTION :	Kinnaman (north) @ 198th		
SCENARIO :	2035 with 2012 UGB Buildout - With South Hillsboro		
PEAK HOUR :	PM		
BASE YEAR :	2011	EAST-WEST ROAD:	Kinnaman (north)
FUTURE YEAR :	2035	NORTH-SOUTH ROAD:	198

	PEAK HOUR TURNING MOVEMENTS											
	NORTHBOUND			SOUTHBOUND			EASTBOUND			WESTBOUND		
YEAR	Left	Thru	Right	Left	Thru	Right	Left	Thru	Right	Left	Thru	Right
BASE YEAR	0	290	25	250	445	0	0	0	0	20	0	170
OUTPUT FUTURE	**0**	**304**	**215**	**312**	**425**	**0**	**0**	**0**	**0**	**189**	**0**	**256**

	PEAK HOUR DIRECTIONAL LINK VOLUMES									
	SOUTHLEG		NORTHLEG		WESTLEG		EASTLEG		ALL LEGS	
YEAR	In	Out	In	Out	In	Out	In	Out	In	Out
BASE YEAR	315	465	695	460	0	0	190	275	1,200	1,200
OUTPUT FUTURE	**518**	**614**	**737**	**559**	**0**	**0**	**445**	**527**	1,700	1,700
INPUT FUTURE	527	614	748	559	0	0	452	527	1,727	1,700
									-27.02	

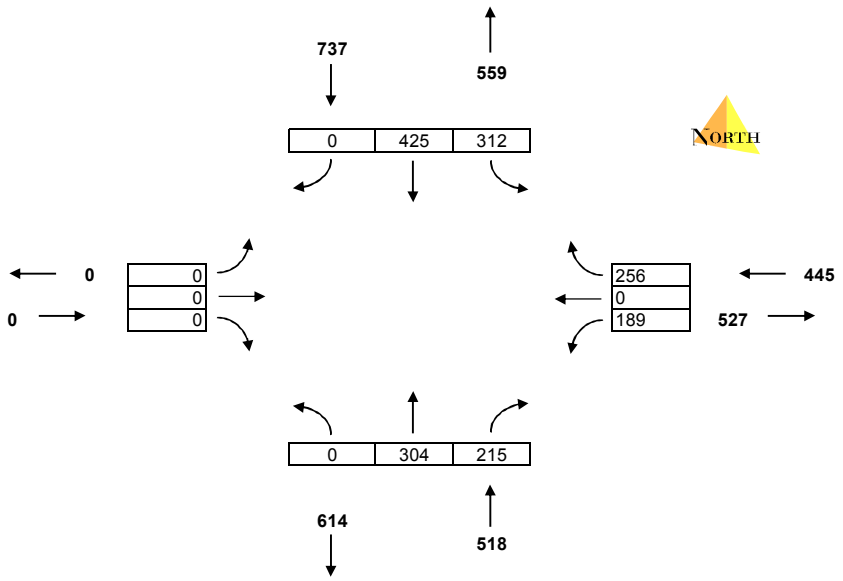

* Turn Calculation Output from NCHRP 255

Insert data into cells with blue font : HEADER INFO, BASE YEAR TURN MOVEMENTS, FUTURE YEAR LINK VOLUMES

OUTPUT DATA IS IN BOLD PRINT.

INTERSECTION :	Kinnaman (south) @ 198th		
SCENARIO :	2035 with 2012 UGB Buildout - With South Hillsboro		
PEAK HOUR :	PM		
BASE YEAR :	2011	EAST-WEST ROAD:	Kinnaman (south)
FUTURE YEAR :	2035	NORTH-SOUTH ROAD:	198

	PEAK HOUR TURNING MOVEMENTS											
	NORTHBOUND			SOUTHBOUND			EASTBOUND			WESTBOUND		
YEAR	Left	Thru	Right	Left	Thru	Right	Left	Thru	Right	Left	Thru	Right
BASE YEAR	25	240	0	0	285	70	75	0	20	0	0	0
OUTPUT FUTURE	**30**	**288**	**0**	**0**	**351**	**209**	**238**	**0**	**26**	**0**	**0**	**0**

	PEAK HOUR DIRECTIONAL LINK VOLUMES									
	SOUTHLEG		NORTHLEG		WESTLEG		EASTLEG		ALL LEGS	
YEAR	In	Out	In	Out	In	Out	In	Out	In	Out
BASE YEAR	265	305	355	315	95	95	0	0	715	715
OUTPUT FUTURE	**318**	**377**	**560**	**527**	**264**	**239**	**0**	**0**	1,142	1,142
INPUT FUTURE	342	377	614	527	284	239	0	0	1,241	1,142
									-98.35	

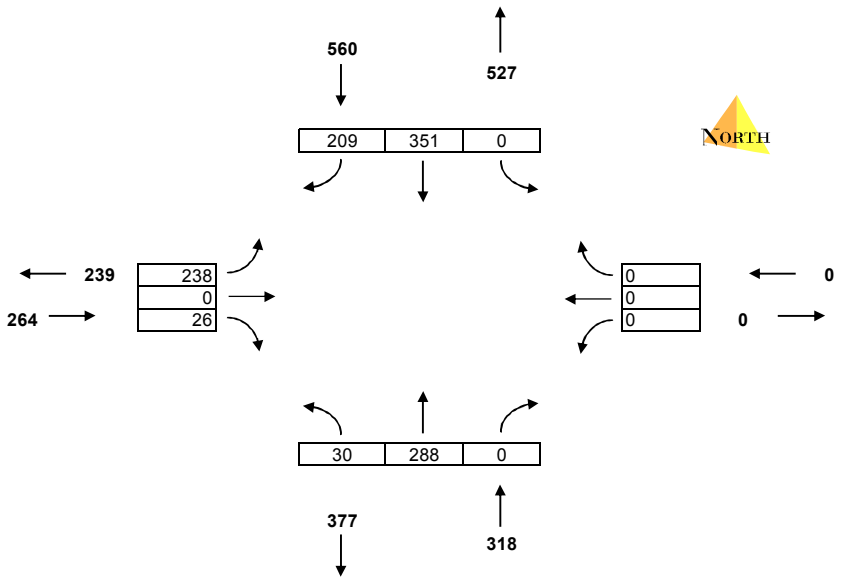

* Turn Calculation Output from NCHRP 255

Insert data into cells with blue font : HEADER INFO, BASE YEAR TURN MOVEMENTS, FUTURE YEAR LINK VOLUMES

OUTPUT DATA IS IN BOLD PRINT.

INTERSECTION :	Kinnaman @ 185th		
SCENARIO :	2035 with 2012 UGB Buildout - With South Hillsboro		
PEAK HOUR :	PM		
BASE YEAR :	2011	EAST-WEST ROAD:	Kinnaman
FUTURE YEAR :	2035	NORTH-SOUTH ROAD:	185

	PEAK HOUR TURNING MOVEMENTS											
	NORTHBOUND			SOUTHBOUND			EASTBOUND			WESTBOUND		
YEAR	Left	Thru	Right	Left	Thru	Right	Left	Thru	Right	Left	Thru	Right
BASE YEAR	60	360	35	205	500	45	80	240	85	65	255	135
OUTPUT FUTURE	**127**	**580**	**57**	**314**	**1,143**	**90**	**124**	**377**	**199**	**113**	**385**	**155**

	PEAK HOUR DIRECTIONAL LINK VOLUMES									
	SOUTHLEG		NORTHLEG		WESTLEG		EASTLEG		ALL LEGS	
YEAR	In	Out	In	Out	In	Out	In	Out	In	Out
BASE YEAR	455	650	750	575	405	360	455	480	2,065	2,065
OUTPUT FUTURE	**765**	**1,455**	**1,546**	**858**	**700**	**602**	**652**	**748**	3,663	3,663
INPUT FUTURE	757	1,455	1,529	858	693	602	646	748	3,625	3,663
									37.96	

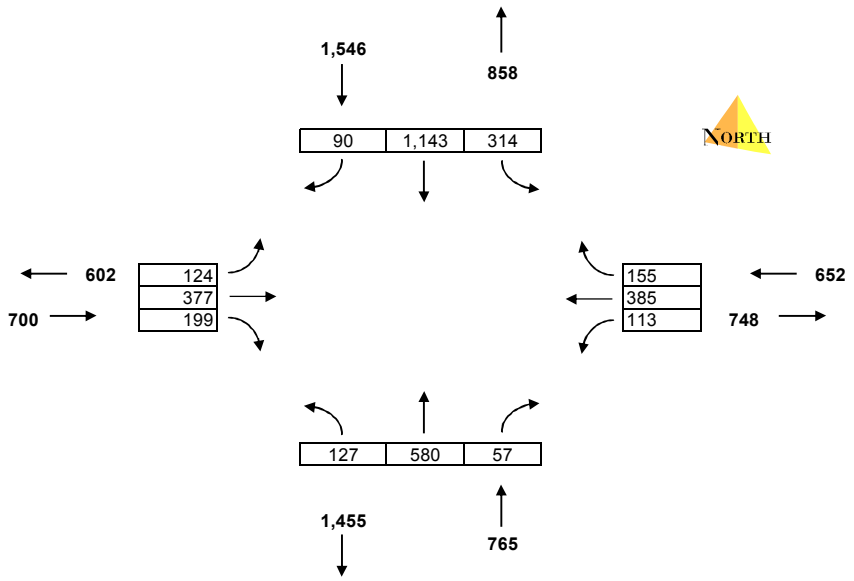

* Turn Calculation Output from NCHRP 255

Insert data into cells with blue font : HEADER INFO, BASE YEAR TURN MOVEMENTS, FUTURE YEAR LINK VOLUMES

OUTPUT DATA IS IN BOLD PRINT.

INTERSECTION :	Farmington @ 198th		
SCENARIO :	2035 with 2012 UGB Buildout - With South Hillsboro		
PEAK HOUR :	PM		
BASE YEAR :	2011	EAST-WEST ROAD:	Farmington
FUTURE YEAR :	2035	NORTH-SOUTH ROAD:	198

	PEAK HOUR TURNING MOVEMENTS											
	NORTHBOUND			SOUTHBOUND			EASTBOUND			WESTBOUND		
YEAR	Left	Thru	Right	Left	Thru	Right	Left	Thru	Right	Left	Thru	Right
BASE YEAR	0	0	0	160	0	85	75	440	0	0	550	130
OUTPUT FUTURE	**0**	**0**	**0**	**270**	**0**	**108**	**146**	**962**	**0**	**0**	**1,125**	**315**

	PEAK HOUR DIRECTIONAL LINK VOLUMES									
	SOUTHLEG		NORTHLEG		WESTLEG		EASTLEG		ALL LEGS	
YEAR	In	Out	In	Out	In	Out	In	Out	In	Out
BASE YEAR	0	0	245	205	515	635	680	600	1,440	1,440
OUTPUT FUTURE	**0**	**0**	**378**	**460**	**1,108**	**1,233**	**1,439**	**1,233**	2,925	2,925
INPUT FUTURE	0	0	385	460	1,129	1,233	1,472	1,233	2,986	2,925
									-60.03	

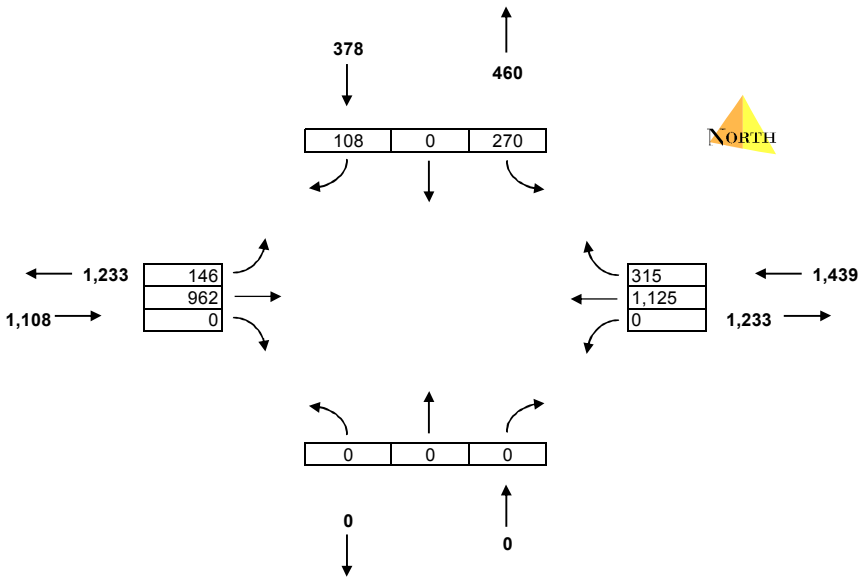

* Turn Calculation Output from NCHRP 255

Insert data into cells with blue font : HEADER INFO, BASE YEAR TURN MOVEMENTS, FUTURE YEAR LINK VOLUMES

OUTPUT DATA IS IN BOLD PRINT.

INTERSECTION :	Farmington @ 185th		
SCENARIO :	2035 with 2012 UGB Buildout - With South Hillsboro		
PEAK HOUR :	PM		
BASE YEAR :	2011	EAST-WEST ROAD:	Farmington
FUTURE YEAR :	2035	NORTH-SOUTH ROAD:	185

	PEAK HOUR TURNING MOVEMENTS											
	NORTHBOUND			SOUTHBOUND			EASTBOUND			WESTBOUND		
YEAR	Left	Thru	Right	Left	Thru	Right	Left	Thru	Right	Left	Thru	Right
BASE YEAR	205	245	60	105	300	145	100	405	150	110	650	55
OUTPUT FUTURE	**261**	**313**	**68**	**221**	**533**	**341**	**210**	**756**	**236**	**158**	**1,236**	**105**

	PEAK HOUR DIRECTIONAL LINK VOLUMES									
	SOUTHLEG		NORTHLEG		WESTLEG		EASTLEG		ALL LEGS	
YEAR	In	Out	In	Out	In	Out	In	Out	In	Out
BASE YEAR	510	560	550	400	655	1,000	815	570	2,530	2,530
OUTPUT FUTURE	**642**	**927**	**1,096**	**628**	**1,202**	**1,838**	**1,499**	**1,045**	4,438	4,438
INPUT FUTURE	656	927	1,120	628	1,228	1,838	1,532	1,045	4,536	4,438
									-97.56	

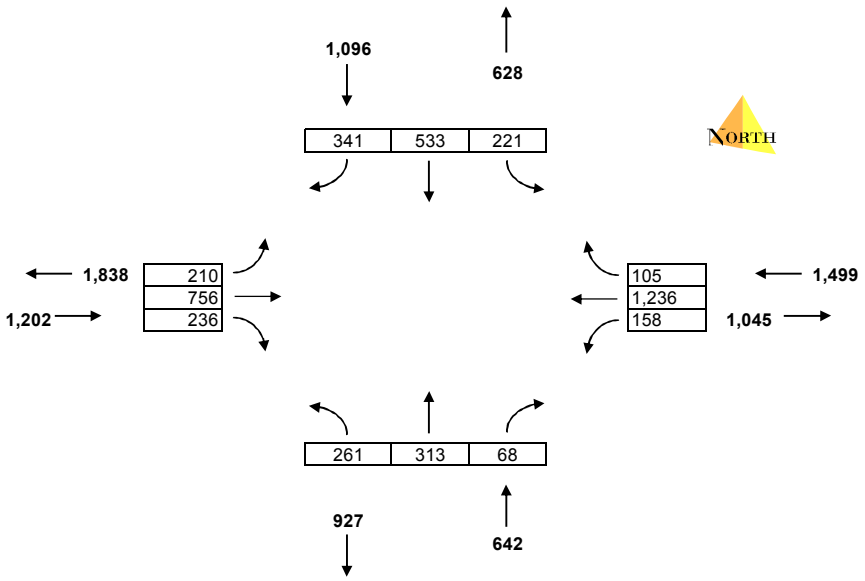

* Turn Calculation Output from NCHRP 255

Insert data into cells with blue font : HEADER INFO, BASE YEAR TURN MOVEMENTS, FUTURE YEAR LINK VOLUMES

OUTPUT DATA IS IN BOLD PRINT.

INTERSECTION :	Cornelius Pass Rd @ johnson St		
SCENARIO :	2035 with 2012 UGB Buildout - With South Hillsboro		
PEAK HOUR :	PM		
BASE YEAR :	2011	EAST-WEST ROAD:	Johnson St
FUTURE YEAR :	2035	NORTH-SOUTH ROAD:	Cornelius Pass

	PEAK HOUR TURNING MOVEMENTS											
	NORTHBOUND			SOUTHBOUND			EASTBOUND			WESTBOUND		
YEAR	Left	Thru	Right	Left	Thru	Right	Left	Thru	Right	Left	Thru	Right
BASE YEAR	85	175	150	35	455	20	15	15	125	115	50	15
OUTPUT FUTURE	**84**	**463**	**194**	**92**	**1,182**	**40**	**65**	**32**	**259**	**180**	**61**	**49**

	PEAK HOUR DIRECTIONAL LINK VOLUMES									
	SOUTHLEG		NORTHLEG		WESTLEG		EASTLEG		ALL LEGS	
YEAR	In	Out	In	Out	In	Out	In	Out	In	Out
BASE YEAR	410	695	510	205	155	155	180	200	1,255	1,255
OUTPUT FUTURE	**740**	**1,621**	**1,314**	**577**	**356**	**185**	**290**	**318**	2,700	2,700
INPUT FUTURE	738	1,621	1,314	577	356	185	290	318	2,698	2,700
									-2.037	

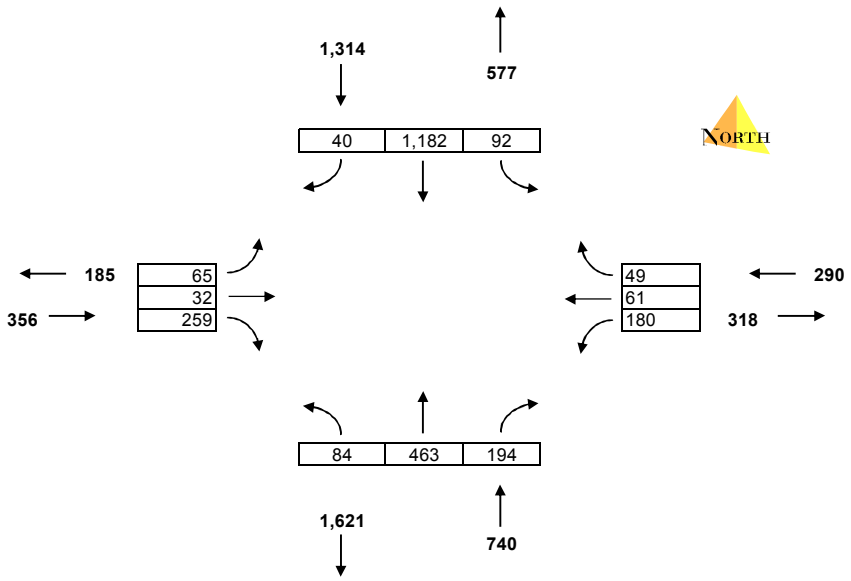

* Turn Calculation Output from NCHRP 255

Insert data into cells with blue font : HEADER INFO, BASE YEAR TURN MOVEMENTS, FUTURE YEAR LINK VOLUMES

OUTPUT DATA IS IN BOLD PRINT.

INTERSECTION :	198th Ave @ Blanton (south)		
SCENARIO :	2035 with 2012 UGB Buildout - With South Hillsboro		
PEAK HOUR :	PM		
BASE YEAR :	2011	EAST-WEST ROAD:	Blanton (South)
FUTURE YEAR :	2035	NORTH-SOUTH ROAD:	198

	PEAK HOUR TURNING MOVEMENTS											
	NORTHBOUND			SOUTHBOUND			EASTBOUND			WESTBOUND		
YEAR	Left	Thru	Right	Left	Thru	Right	Left	Thru	Right	Left	Thru	Right
BASE YEAR	150	120	0	0	205	285	130	0	150	0	0	0
OUTPUT FUTURE	**80**	**223**	**0**	**0**	**321**	**264**	**132**	**0**	**74**	**0**	**0**	**0**

	PEAK HOUR DIRECTIONAL LINK VOLUMES									
	SOUTHLEG		NORTHLEG		WESTLEG		EASTLEG		ALL LEGS	
YEAR	In	Out	In	Out	In	Out	In	Out	In	Out
BASE YEAR	270	355	490	250	280	435	0	0	1,040	1,040
OUTPUT FUTURE	**303**	**395**	**585**	**356**	**206**	**344**	**0**	**0**	1,094	1,094
INPUT FUTURE	347	395	670	356	236	344	0	0	1,254	1,094
									159.3	

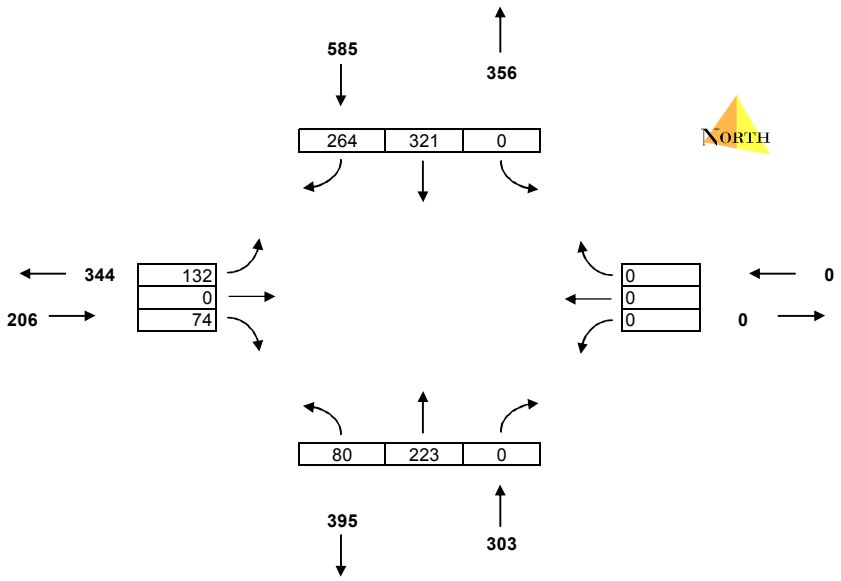

* Turn Calculation Output from NCHRP 255

Insert data into cells with blue font : HEADER INFO, BASE YEAR TURN MOVEMENTS, FUTURE YEAR LINK VOLUMES

OUTPUT DATA IS IN BOLD PRINT.

INTERSECTION :	198th Ave @ Blanton St North		
SCENARIO :	2035 with 2012 UGB Buildout - With South Hillsboro		
PEAK HOUR :	PM		
BASE YEAR :	2011	EAST-WEST ROAD:	Blanton St (North)
FUTURE YEAR :	2035	NORTH-SOUTH ROAD:	198

	PEAK HOUR TURNING MOVEMENTS											
	NORTHBOUND			SOUTHBOUND			EASTBOUND			WESTBOUND		
YEAR	Left	Thru	Right	Left	Thru	Right	Left	Thru	Right	Left	Thru	Right
BASE YEAR	0	200	50	135	390	0	0	0	0	100	0	215
OUTPUT FUTURE	**0**	**216**	**145**	**181**	**435**	**0**	**0**	**0**	**0**	**235**	**0**	**226**

	PEAK HOUR DIRECTIONAL LINK VOLUMES									
	SOUTHLEG		NORTHLEG		WESTLEG		EASTLEG		ALL LEGS	
YEAR	In	Out	In	Out	In	Out	In	Out	In	Out
BASE YEAR	250	490	525	415	0	0	315	185	1,090	1,090
OUTPUT FUTURE	**361**	**670**	**616**	**442**	**0**	**0**	**462**	**326**	1,438	1,438
INPUT FUTURE	356	670	607	442	0	0	455	326	1,418	1,438
									-20.15	

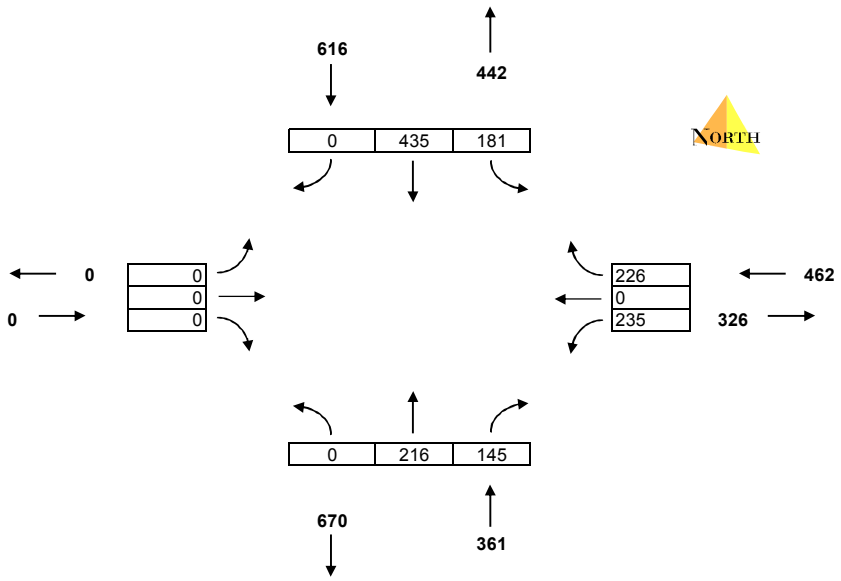

* Turn Calculation Output from NCHRP 255

Insert data into cells with blue font : HEADER INFO, BASE YEAR TURN MOVEMENTS, FUTURE YEAR LINK VOLUMES

OUTPUT DATA IS IN BOLD PRINT.

INTERSECTION :	185th Ave @ Blanton St (South)		
SCENARIO :	2035 with 2012 UGB Buildout - With South Hillsboro		
PEAK HOUR :	PM		
BASE YEAR :	2011	EAST-WEST ROAD:	Blanton (South)
FUTURE YEAR :	2035	NORTH-SOUTH ROAD:	185

	PEAK HOUR TURNING MOVEMENTS											
	NORTHBOUND			SOUTHBOUND			EASTBOUND			WESTBOUND		
YEAR	Left	Thru	Right	Left	Thru	Right	Left	Thru	Right	Left	Thru	Right
BASE YEAR	0	515	60	175	785	0	0	0	0	135	0	150
OUTPUT FUTURE	**0**	**761**	**74**	**264**	**1,405**	**0**	**0**	**0**	**0**	**258**	**0**	**289**

	PEAK HOUR DIRECTIONAL LINK VOLUMES									
	SOUTHLEG		NORTHLEG		WESTLEG		EASTLEG		ALL LEGS	
YEAR	In	Out	In	Out	In	Out	In	Out	In	Out
BASE YEAR	575	920	960	665	0	0	285	235	1,820	1,820
OUTPUT FUTURE	**835**	**1,663**	**1,668**	**1,050**	**0**	**0**	**548**	**338**	3,051	3,051
INPUT FUTURE	843	1,663	1,685	1,050	0	0	553	338	3,080	3,051
									29.76	

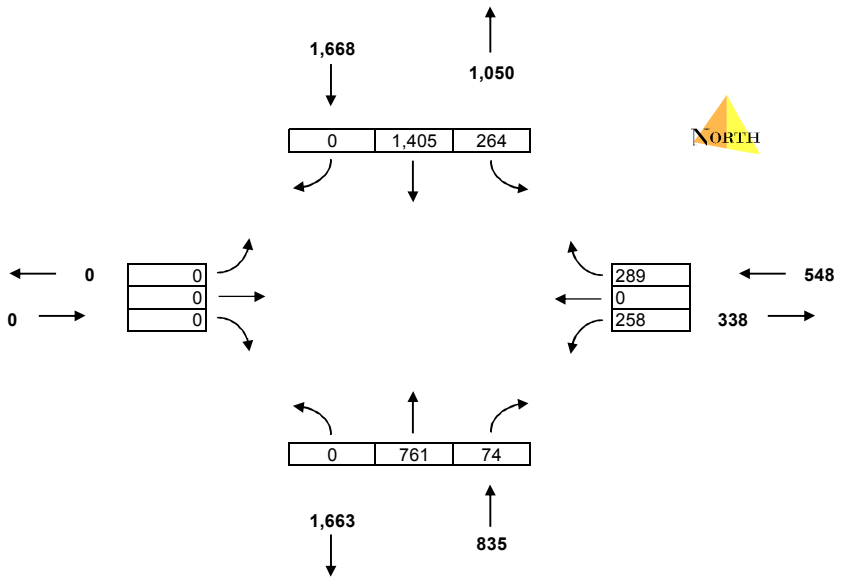

* Turn Calculation Output from NCHRP 255

Insert data into cells with blue font : HEADER INFO, BASE YEAR TURN MOVEMENTS, FUTURE YEAR LINK VOLUMES

OUTPUT DATA IS IN BOLD PRINT.

INTERSECTION :	185th Ave @ Blanton North		
SCENARIO :	2035 with 2012 UGB Buildout - With South Hillsboro		
PEAK HOUR :	PM		
BASE YEAR :	2011	EAST-WEST ROAD:	Blanton (north)
FUTURE YEAR :	2035	NORTH-SOUTH ROAD:	185

	PEAK HOUR TURNING MOVEMENTS											
	NORTHBOUND			SOUTHBOUND			EASTBOUND			WESTBOUND		
YEAR	Left	Thru	Right	Left	Thru	Right	Left	Thru	Right	Left	Thru	Right
BASE YEAR	90	575	0	0	760	265	135	0	110	0	0	0
OUTPUT FUTURE	**177**	**904**	**0**	**0**	**1,441**	**347**	**165**	**0**	**243**	**0**	**0**	**0**

	PEAK HOUR DIRECTIONAL LINK VOLUMES									
	SOUTHLEG		NORTHLEG		WESTLEG		EASTLEG		ALL LEGS	
YEAR	In	Out	In	Out	In	Out	In	Out	In	Out
BASE YEAR	665	870	1,025	710	245	355	0	0	1,935	1,935
OUTPUT FUTURE	**1,080**	**1,685**	**1,789**	**1,069**	**409**	**524**	**0**	**0**	3,278	3,278
INPUT FUTURE	1,050	1,685	1,727	1,069	396	524	0	0	3,173	3,278
									-104.9	

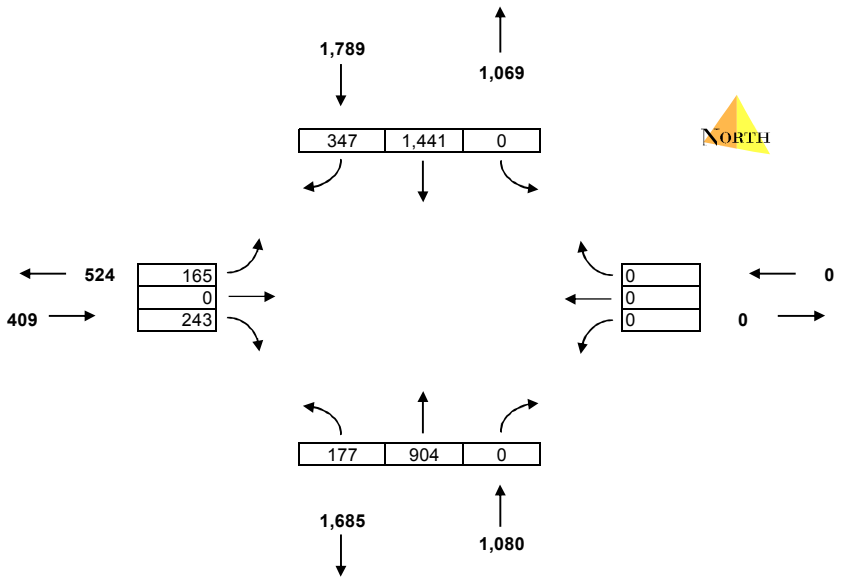

* Turn Calculation Output from NCHRP 255

Appendix D: Arterial v. Throughway Issue Paper

TV Highway Corridor Refinement Plan
Arterial v. Throughway Issue Paper

ISSUE
The Project Management Team (PMT) is seeking input from the Policy Group on whether Tualatin Valley Highway ("TV Hwy") should be designated as an arterial or throughway.

BACKGROUND
As part of the 2035 Regional Transportation Plan (RTP), the concept of regional mobility corridors emerged to help guide investments. The regional mobility corridor concept integrates arterial streets, throughways, high capacity transit, frequent bus routes, freight/passenger rail, and bicycle parkways into subareas of the region that work together to provide for regional, statewide and interstate travel.[1] The function of this network of integrated transportation corridors is metropolitan mobility – moving people and goods between different parts of the region and, in some corridors, connecting the region with the rest of the state and beyond. These transportation corridors also have significant influence on the development and function of the land uses they serve. The regional mobility corridor concept calls for consideration of multiple facilities, modes and land use when identifying needs and most effective mix of land use and transportation solutions to improve mobility within a specific corridor area.

In April of 2007, regional partners identified 24 mobility corridors centered on the region's network of interstate and state highways. A mobility corridor was designated connecting Beaverton to Hillsboro and Forest Grove centering on TV Hwy. The Oregon Department of Transportation, City of Hillsboro, and Washington County are developing the Tualatin Valley Corridor Plan (TVCP) for the 8.5 mile section of TV Highway between downtown Beaverton and downtown Hillsboro, and the broader area served by this transportation corridor.

The purpose of the TVCP is to define the regional functional classification for all modes, design classification and typical cross section for TV Hwy and identify a package of transportation solutions to address transportation system deficiencies for all modes and transportation facilities in the project area.

TV Hwy is currently designated as a principal arterial[2] between Murray Boulevard and Brookwood Avenue and as an arterial from Brookwood Avenue west through Hillsboro and from Murray Boulevard east to Highway 217. The County Transportation System Plan (TSP) shows TV Hwy as a principal arterial from Brookwood to roughly Cedar Hills Boulevard.

---

[1] See 2.4.2.4 Regional Bicycle System for more information about the bicycle parkway concept.
[2] Under the RTP, throughways are classified as "principal arterials" (RTP at p. G-23).

Consistent with these initiatives, the PMT is seeking an early determination from the Policy Group on whether TV Hwy should be classified as an Arterial or Throughway Principal or Major Arterial throughout the entire corridor.

CONSIDERATIONS

1. **Should TV Hwy Primarily Serve Longer Distance Travel Through or Local Travel Within the Corridor?**

In answering the question of whether TV Hwy should be an arterial or throughway, it is helpful to look at the functions of each of these roadways in comparison to how TV Hwy currently is used and to how it is envisioned to be used in the future. Table 1 compares features of throughways to arterials and how TV Hwy functions today.

Figure 1 illustrates the relationship between arterials and throughways, the throughways being more restrictive to local traffic and having more access control than arterials.

Figure 1 – Relationship Between Functional Classification, Mobility and Access

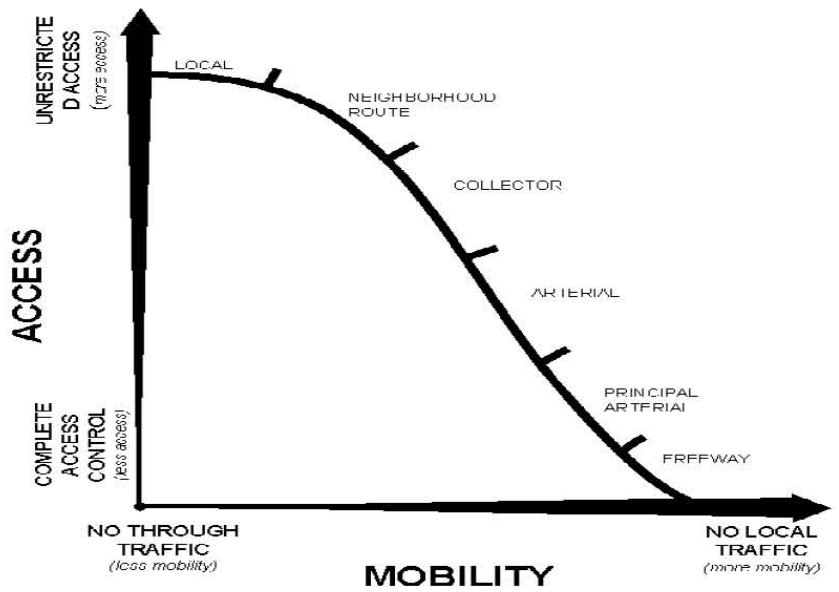

Source: Washington County Transportation System Plan (3.23.2003)

Table 1: Arterial v. Throughway Decision Matrix

THROUGHWAY	ARTERIAL	TV HIGHWAY PERFORMANCE TODAY
Serves longer distance travel within the region and state	For travel within the region to major destination areas and to throughways	Over half of the trips begin and end in corridor.[3]
Carries between 50,000 and 100,000 vehicles per day	Carries between 10,000 and 40,000 vehicles per day	Current traffic volumes are between 30,000 and 40,000 vehicles per day.[4]
Access to adjacent properties is highly limited	Access to adjacent properties is moderately limited	Frequent access points on north side of highway; limited access on south side due to railroad (*see* maps).
• 6 travel lanes • High speeds • Mix of at-grade and grade separated intersections/interchanges	• 4 travel lanes with turn lanes • Moderate speeds • At-grade intersections	• 4 travel lanes with turn lanes. • Speeds vary between 35 and 45 mph. • Existing intersections at grade.
Design emphasis for travel by car and freight truck and is not appropriate with granting access to transit, bicycles and pedestrians	Compatible with bicycle, pedestrian, truck and transit travel	• Sidewalks on north side but incomplete on south side. • Bike lanes along highway through most of project area. • TriMet 57 frequent bus 8th most used in system. • Current heavy congestion during peak periods.
Land use implications: • The above factors place emphasis on moving through, versus within the region. • Access to adjacent land uses is restricted. • Creates more conflicts with land uses and transportation and between modes of transportation. • "*Highway designs do not reflect adjacent land use*."[5] • Limits ability to create complete communities.	*Land use implications*: • Accommodates movement within and through region. • Less restricted land use access. • Land uses can encourage alternative modes of transportation for local trips.[6] • Emphasis on finding balanced multi-modal function.[7] • Appropriate for more intensely developed activity centers.[8] • Overall, greater opportunity to integrate land uses and transportation.	*Existing Land Use Implications:* • Area characterized by residential to the north and south of the highway as the predominant use in the project area; commercial uses – predominantly retail – align the north side of the highway with a mix of industrial and commercial uses in areas along the south side. • Approximately 30 schools in corridor project area • High transit ridership • 92,000 persons and more than 33,700 dwelling units in corridor[9] *Future Land Use Implications*: • Aloha-Reedville Livability Study includes project goal to "*develop strategies for economic improvements, housing, redevelopment, corridors and town centers, and transportation improvements that promote livability and sustainability.*" • Inclusion of 1063 acres ("South Hillsboro") in UGB to accommodate 10,766 dwelling units. • Beaverton's Civic Plan and its concept for a more pedestrian friendly environment in its downtown core, including Canyon Road.
Examples in the region: I-5, I-405, I-205, I-84, Highway 30, Highway 26, Highway 99, Highway 217; Highway 224 (McLoughlin to I-205)	*Examples in the region*: TV Highway from Brookwood Avenue west to Forest Grove and from Murray Boulevard east to Highway 217; Canyon Road from Highway 217 to I-5, Cornelius Pass Road between TV Highway and Highway 26; Cornell Road, SE Powell Blvd and NW/NE Broadway.	

Source: *Metro 2035 Regional Transportation Plan* (unless otherwise noted)

[3] Metro Model
[4] West of Highway 217, traffic volumes of Highway 8 (TV Highway) are close to 50,000 vehicles per day. That section is designated in the RTP as an arterial.
[5] *Creating Livable Streets, Street Design Guidelines* (Metro, 2002)(because of the emphasis on through traffic, the *Guidelines* do not address throughways).
[6] *Id.* at p.44.
[7] *Id. at p.58* (while the *Guidelines* address Regional boulevards, "regional boulevards serve a function similar to the major arterial classification.")
[8] *Id.*
[9] 2010 U.S. Census for Census Block Groups that overlap the TVCP project Area.

Additional factors to consider regarding how TV Hwy may function in the future:

- The TVCP is to come up with solutions for all modes of transportation – including walking, transit and cycling, as well as automobiles, truck freight and rail.
- ***Impacts to the Built Environment and Businesses****:* Adding capacity would require acquiring right of way on the north side, as the south side is encumbered by the railroad. There would be significant impacts at intersections if grade separation were required. Designation as a throughway may also result in more restricted access management, further impacting existing businesses on the north side of TV Hwy.
- ***Cost:*** ODOT preliminary design developed a planning level cost estimate – *not including the right of way costs* – for the widening of TV Highway to 6 lanes, with 3 grade-separated intersections (one at Cedar Hills Boulevard, 185th Avenue and Murray Boulevard) from Murray Boulevard to Brookwood Avenue. The road widening is about $70-$90 million and *each* interchange at $55-$70 million.
- From stakeholder interviews of the Policy Group and Senior Staff:
    - ***Adding Capacity:*** Simply adding lanes was not a favored solution. Similarly, several people indicated that grade-separation is not favored. Both added lanes and grade-separated intersections were seen as further reducing the quality of the pedestrian environment and safety, as well as dividing communities. However, with regard to grade-separation, one senior staff member did encourage looking into designs of modern (arterial?) grade-separated intersections.
    - ***Mobility*****:** It is expected that trips in the corridor will shorten. Several people stressed the need to find the balance between creating a better environment along the highway and moving people and freight.
    - ***Future Development in the Corridor*****:** Looking to the future, it is envisioned that nodes of complete communities (consistent with Metro 2040) will develop along the corridor. This increased development is likely to result in TV Hwy being used for more local, as opposed to through traffic, resulting in shorter trips.

2. Transportation Solution Priorities

Under both the Oregon Highway Plan (OHP) and the Regional Transportation Plan, adding capacity is the last option.

Oregon Highway Plan Transportation System Solution Priorities:

1. *Protect existing transportation system*
    - Safety – reduce crashes and injuries
    - Technology – upgrade traffic signals to improve reliability for driving cars and trucks
    - Transit – enhance the quality, safety and reliability of transit and make it easier and safer to get to transit stops
    - Bicycle system – enhance the quality, safety and convenience for bicycling
    - Pedestrian system – enhance the quality, safety and convenience for walking or using a mobility device
2. *Improve efficiency and capacity of existing system*
    - Complete the street network – improve street connectivity and make all streets

accessible for all modes
- Intersection operations – solutions that add left or right turn lanes for vehicles at intersections

3. *Add capacity*
    - Add vehicle lanes on TV Highway – add capacity for motor vehicles

Regional Transportation Plan – Policies for the Arterial and Throughway Network Vision[10]

The Arterial and Throughway concept

> *. . . contains policy and strategy provisions to develop a complete and well-connected roadway system that provides adequate capacity and supports all modes of travel. Rather than relying principally on levels of congestion to direct how and where to address motor vehicle capacity needs, the concept calls for implementing a well-connected network design that is tailored to fit local geography, respect existing communities and future development and protect the natural environment*

The RTP sets forth the following three policies as the foundation for the arterial and throughway vision:

1. Build a well-connected network of "complete" streets that prioritize safe and convenient pedestrian and bicycle access.
2. Improve local and collector street connectivity.
3. Maximize system operations by implementing management strategies *prior to building new motor vehicle capacity,* where appropriate (emphasis added).

3. Intelligent Transportation Systems

Technology, known as Intelligent Transportation Systems, will likely play a large role in any solutions package. As stated in Metro's report – *Mobility the Smart Way: The State of ITS in the Portland Metropolitan Region* – "***more than half of all congestion is caused by incidents and other sources that can be addressed using system management and operational strategies***" (p. 4). Accordingly, one of Oregon Transportation Plan's key initiatives is to "***optimize system capacity and safety through information technology and other methods***."

OPTIONS AVAILABLE

There are two options at this point:

- Give policy direction for designation of the entire lengthy of TV Hwy in the corridor as an arterial. This will allow the study of solutions that maintain existing capacity for through traffic at four lanes (with additional turn lanes, as needed).
- Defer decision until the solution package is developed and include the possibility as adding capacity as a solution.

[10] RTP Section 2.5.2.

IMPLICATIONS AND SUGGESTIONS

Making a determination of whether TV Hwy should be an arterial or throughway more clearly defines the target for the long-term design and, correspondingly, the range of tools/options to prioritize investment in the corridor. It also will provide more clarity to the public and stakeholders to help us get to a solutions package and set expectations.

DRAFT

Appendix E: 2035 Traffic Operations Base Case without South Hillsboro

Movement	EBL	EBR	NBL	NBT	SBT	SBR
Lane Configurations						
Volume (veh/h)	170	50	100	600	180	50
Sign Control	Stop			Free	Free	
Grade	0%			0%	0%	
Peak Hour Factor	1.00	1.00	1.00	1.00	1.00	1.00
Hourly flow rate (vph)	170	50	100	600	180	50
Pedestrians						
Lane Width (ft)						
Walking Speed (ft/s)						
Percent Blockage						
Right turn flare (veh)						
Median type				None	None	
Median storage veh)						
Upstream signal (ft)						
pX, platoon unblocked						
vC, conflicting volume	1005	205	230			
vC1, stage 1 conf vol						
vC2, stage 2 conf vol						
vCu, unblocked vol	1005	205	230			
tC, single (s)	6.4	6.2	4.1			
tC, 2 stage (s)						
tF (s)	3.5	3.3	2.2			
p0 queue free %	31	94	93			
cM capacity (veh/h)	248	836	1338			

Direction, Lane #	EB 1	EB 2	NB 1	NB 2	SB 1
Volume Total	170	50	100	600	230
Volume Left	170	0	100	0	0
Volume Right	0	50	0	0	50
cSH	248	836	1338	1700	1700
Volume to Capacity	0.69	0.06	0.07	0.35	0.14
Queue Length 95th (ft)	112	5	6	0	0
Control Delay (s)	46.3	9.6	7.9	0.0	0.0
Lane LOS	E	A	A		
Approach Delay (s)	37.9		1.1		0.0
Approach LOS	E				

Intersection Summary			
Average Delay	7.9		
Intersection Capacity Utilization	48.5%	ICU Level of Service	A
Analysis Period (min)	15		

Movement	EBL	EBT	EBR	WBL	WBT	WBR	NBL	NBT	NBR	SBL	SBT	SBR
Lane Configurations												
Volume (vph)	5	705	275	30	1185	35	315	255	35	45	70	5
Ideal Flow (vphpl)	1900	1900	1900	1900	1900	1900	1900	1900	1900	1900	1900	1900
Total Lost time (s)	4.0	4.0		4.0	4.0		3.0	4.0		3.0	4.0	
Lane Util. Factor	1.00	0.95		1.00	0.95		0.97	1.00		1.00	1.00	
Frt	1.00	0.96		1.00	1.00		1.00	0.98		1.00	0.99	
Flt Protected	0.95	1.00		0.95	1.00		0.95	1.00		0.95	1.00	
Satd. Flow (prot)	1805	3424		1805	3589		3502	1827		1770	1864	
Flt Permitted	0.12	1.00		0.23	1.00		0.95	1.00		0.95	1.00	
Satd. Flow (perm)	234	3424		446	3589		3502	1827		1770	1864	
Peak-hour factor, PHF	1.00	1.00	1.00	1.00	1.00	1.00	1.00	1.00	1.00	1.00	1.00	1.00
Adj. Flow (vph)	5	705	275	30	1185	35	315	255	35	45	70	5
RTOR Reduction (vph)	0	34	0	0	2	0	0	5	0	0	3	0
Lane Group Flow (vph)	5	946	0	30	1218	0	315	285	0	45	72	0
Heavy Vehicles (%)	0%	1%	1%	0%	0%	5%	0%	1%	10%	2%	1%	0%
Turn Type	pm+pt			pm+pt			Prot			Prot		
Protected Phases	5	2		1	6		3	8		7	4	
Permitted Phases	2			6								
Actuated Green, G (s)	52.1	52.1		57.0	56.5		11.6	22.2		3.0	13.6	
Effective Green, g (s)	52.1	52.6		57.0	57.0		12.6	23.2		4.0	14.6	
Actuated g/C Ratio	0.52	0.53		0.57	0.57		0.13	0.23		0.04	0.15	
Clearance Time (s)	4.0	4.5		4.0	4.5		4.0	5.0		4.0	5.0	
Vehicle Extension (s)	2.3	4.3		2.3	4.3		2.5	2.5		2.5	2.5	
Lane Grp Cap (vph)	134	1801		325	2046		441	424		71	272	
v/s Ratio Prot	0.00	c0.28		0.00	c0.34		c0.09	c0.16		0.03	0.04	
v/s Ratio Perm	0.02			0.05								
v/c Ratio	0.04	0.53		0.09	0.60		0.71	0.67		0.63	0.27	
Uniform Delay, d1	14.4	15.5		15.0	14.0		42.0	34.9		47.3	37.9	
Progression Factor	1.00	1.00		0.54	0.93		1.00	1.00		1.00	1.00	
Incremental Delay, d2	0.1	1.1		0.1	1.2		5.1	3.8		15.0	0.4	
Delay (s)	14.4	16.6		8.1	14.2		47.0	38.7		62.3	38.3	
Level of Service	B	B		A	B		D	D		E	D	
Approach Delay (s)		16.6			14.0			43.0			47.3	
Approach LOS		B			B			D			D	

Intersection Summary			
HCM Average Control Delay	22.2	HCM Level of Service	C
HCM Volume to Capacity ratio	0.63		
Actuated Cycle Length (s)	100.0	Sum of lost time (s)	11.0
Intersection Capacity Utilization	62.7%	ICU Level of Service	B
Analysis Period (min)	15		

c Critical Lane Group

Movement	EBL	EBT	EBR	WBL	WBT	WBR	NBL	NBT	NBR	SBL	SBT	SBR
Lane Configurations												
Volume (vph)	40	230	165	30	460	180	145	360	50	135	175	30
Ideal Flow (vphpl)	1900	1900	1900	1900	1900	1900	1900	1900	1900	1900	1900	1900
Total Lost time (s)	4.0	4.0		4.0	4.0		4.0	4.0	5.5	4.0	4.0	
Lane Util. Factor	1.00	1.00		1.00	1.00		1.00	1.00	1.00	1.00	1.00	
Frt	1.00	0.94		1.00	0.96		1.00	1.00	0.85	1.00	0.98	
Flt Protected	0.95	1.00		0.95	1.00		0.95	1.00	1.00	0.95	1.00	
Satd. Flow (prot)	1805	1766		1805	1820		1805	1900	1615	1805	1843	
Flt Permitted	0.95	1.00		0.95	1.00		0.95	1.00	1.00	0.95	1.00	
Satd. Flow (perm)	1805	1766		1805	1820		1805	1900	1615	1805	1843	
Peak-hour factor, PHF	1.00	1.00	1.00	1.00	1.00	1.00	1.00	1.00	1.00	1.00	1.00	1.00
Adj. Flow (vph)	40	230	165	30	460	180	145	360	50	135	175	30
RTOR Reduction (vph)	0	30	0	0	16	0	0	0	39	0	7	0
Lane Group Flow (vph)	40	365	0	30	624	0	145	360	11	135	198	0
Heavy Vehicles (%)	0%	0%	2%	0%	0%	0%	0%	0%	0%	0%	1%	0%
Turn Type	Prot			Prot			Prot		Perm	Prot		
Protected Phases	5	2		1	6		7	4		3	8	
Permitted Phases									4			
Actuated Green, G (s)	2.6	28.6		2.6	28.4		9.1	17.7	17.7	8.5	17.0	
Effective Green, g (s)	4.1	29.6		4.1	29.6		10.7	18.7	17.2	10.1	18.1	
Actuated g/C Ratio	0.05	0.38		0.05	0.38		0.14	0.24	0.22	0.13	0.23	
Clearance Time (s)	5.5	5.0		5.5	5.2		5.6	5.0	5.0	5.6	5.1	
Vehicle Extension (s)	3.1	2.5		3.1	2.5		2.9	2.5	2.5	2.9	2.5	
Lane Grp Cap (vph)	94	666		94	686		246	453	354	232	425	
v/s Ratio Prot	c0.02	0.21		0.02	c0.34		c0.08	c0.19		0.07	0.11	
v/s Ratio Perm									0.01			
v/c Ratio	0.43	0.55		0.32	0.91		0.59	0.79	0.03	0.58	0.47	
Uniform Delay, d1	36.1	19.2		35.9	23.2		31.8	28.1	24.1	32.2	26.0	
Progression Factor	1.00	1.00		1.00	1.00		1.00	1.00	1.00	1.00	1.00	
Incremental Delay, d2	3.2	0.7		2.0	15.9		3.5	9.0	0.0	3.6	0.6	
Delay (s)	39.3	19.9		37.9	39.1		35.3	37.1	24.1	35.8	26.6	
Level of Service	D	B		D	D		D	D	C	D	C	
Approach Delay (s)		21.7			39.0			35.5			30.3	
Approach LOS		C			D			D			C	

Intersection Summary			
HCM Average Control Delay	32.8	HCM Level of Service	C
HCM Volume to Capacity ratio	0.75		
Actuated Cycle Length (s)	78.5	Sum of lost time (s)	12.0
Intersection Capacity Utilization	71.6%	ICU Level of Service	C
Analysis Period (min)	15		

c Critical Lane Group

Movement	EBL	EBT	EBR	WBL	WBT	WBR	NBL	NBT	NBR	SBL	SBT	SBR
Lane Configurations												
Volume (vph)	60	620	65	100	900	80	150	285	140	105	210	50
Ideal Flow (vphpl)	1900	1900	1900	1900	1900	1900	1900	1900	1900	1900	1900	1900
Total Lost time (s)	4.0	4.0		4.0	4.0	4.0		4.0	4.0	4.0	4.0	4.0
Lane Util. Factor	1.00	0.95		1.00	0.95	1.00		0.95	1.00	1.00	1.00	1.00
Frt	1.00	0.99		1.00	1.00	0.85		1.00	0.85	1.00	1.00	0.85
Flt Protected	0.95	1.00		0.95	1.00	1.00		0.98	1.00	0.95	1.00	1.00
Satd. Flow (prot)	1805	3532		1626	3574	1615		3514	1495	1805	1900	1583
Flt Permitted	0.95	1.00		0.95	1.00	1.00		0.98	1.00	0.95	1.00	1.00
Satd. Flow (perm)	1805	3532		1626	3574	1615		3514	1495	1805	1900	1583
Peak-hour factor, PHF	1.00	1.00	1.00	1.00	1.00	1.00	1.00	1.00	1.00	1.00	1.00	1.00
Adj. Flow (vph)	60	620	65	100	900	80	150	285	140	105	210	50
RTOR Reduction (vph)	0	7	0	0	0	42	0	0	117	0	0	38
Lane Group Flow (vph)	60	678	0	100	900	38	0	435	23	105	210	12
Heavy Vehicles (%)	0%	0%	8%	11%	1%	0%	1%	1%	8%	0%	0%	2%
Turn Type	Prot			Prot		Perm	Split		Perm	Split		custom
Protected Phases	5	2		1	6		4	4		8	8	
Permitted Phases						6			4			8 5
Actuated Green, G (s)	5.3	38.5		13.5	46.7	46.7		16.4	16.4	15.1	15.1	24.4
Effective Green, g (s)	5.3	39.0		13.5	47.2	47.2		16.4	16.4	15.1	15.1	24.4
Actuated g/C Ratio	0.05	0.39		0.14	0.47	0.47		0.16	0.16	0.15	0.15	0.24
Clearance Time (s)	4.0	4.5		4.0	4.5	4.5		4.0	4.0	4.0	4.0	
Vehicle Extension (s)	2.3	4.3		2.3	4.3	4.3		2.3	2.3	2.3	2.3	
Lane Grp Cap (vph)	96	1377		220	1687	762		576	245	273	287	386
v/s Ratio Prot	c0.03	0.19		c0.06	c0.25			c0.12		0.06	c0.11	
v/s Ratio Perm						0.02			0.02			0.01
v/c Ratio	0.62	0.49		0.45	0.53	0.05		0.76	0.09	0.38	0.73	0.03
Uniform Delay, d1	46.4	23.0		39.9	18.6	14.3		39.9	35.5	38.3	40.5	28.8
Progression Factor	1.43	0.53		1.00	1.00	1.00		1.00	1.00	1.00	1.00	1.00
Incremental Delay, d2	8.7	1.1		0.9	1.2	0.1		5.2	0.1	0.5	8.5	0.0
Delay (s)	75.1	13.2		40.7	19.8	14.4		45.1	35.6	38.8	49.0	28.8
Level of Service	E	B		D	B	B		D	D	D	D	C
Approach Delay (s)		18.2			21.4			42.8			43.3	
Approach LOS		B			C			D			D	

Intersection Summary			
HCM Average Control Delay	27.9	HCM Level of Service	C
HCM Volume to Capacity ratio	0.59		
Actuated Cycle Length (s)	100.0	Sum of lost time (s)	12.0
Intersection Capacity Utilization	64.8%	ICU Level of Service	C
Analysis Period (min)	15		

c Critical Lane Group

Movement	EBL	EBR	NBL	NBT	SBT	SBR
Lane Configurations						
Volume (veh/h)	200	150	160	635	150	190
Sign Control	Stop			Free	Free	
Grade	0%			0%	0%	
Peak Hour Factor	1.00	1.00	1.00	1.00	1.00	1.00
Hourly flow rate (vph)	200	150	160	635	150	190
Pedestrians						
Lane Width (ft)						
Walking Speed (ft/s)						
Percent Blockage						
Right turn flare (veh)						
Median type				None	None	
Median storage veh)						
Upstream signal (ft)					961	
pX, platoon unblocked						
vC, conflicting volume	1105	150	340			
vC1, stage 1 conf vol						
vC2, stage 2 conf vol						
vCu, unblocked vol	1105	150	340			
tC, single (s)	6.4	6.2	4.1			
tC, 2 stage (s)						
tF (s)	3.5	3.3	2.2			
p0 queue free %	1	83	87			
cM capacity (veh/h)	203	896	1219			

Direction, Lane #	EB 1	NB 1	NB 2	SB 1	SB 2
Volume Total	350	160	635	150	190
Volume Left	200	160	0	0	0
Volume Right	150	0	0	0	190
cSH	303	1219	1700	1700	1700
Volume to Capacity	1.15	0.13	0.37	0.09	0.11
Queue Length 95th (ft)	369	11	0	0	0
Control Delay (s)	137.5	8.4	0.0	0.0	0.0
Lane LOS	F	A			
Approach Delay (s)	137.5	1.7		0.0	
Approach LOS	F				

Intersection Summary			
Average Delay	33.3		
Intersection Capacity Utilization	61.2%	ICU Level of Service	B
Analysis Period (min)	15		

Movement	EBL	EBT	EBR	WBL	WBT	WBR	NBL	NBT	NBR	SBL	SBT	SBR
Lane Configurations												
Volume (vph)	75	1005	70	160	1290	165	100	345	270	200	185	130
Ideal Flow (vphpl)	1900	1900	1900	1900	1900	1900	1900	1900	1900	1900	1900	1900
Total Lost time (s)	4.0	4.0	4.0	4.0	4.0	4.0	4.0	4.0	4.5	4.0	4.0	
Lane Util. Factor	1.00	0.95	1.00	1.00	0.95	1.00	1.00	0.95	1.00	1.00	0.95	
Frt	1.00	1.00	0.85	1.00	1.00	0.85	1.00	1.00	0.85	1.00	0.94	
Flt Protected	0.95	1.00	1.00	0.95	1.00	1.00	0.95	1.00	1.00	0.95	1.00	
Satd. Flow (prot)	1805	3539	1615	1736	3574	1615	1805	3610	1615	1805	3373	
Flt Permitted	0.95	1.00	1.00	0.95	1.00	1.00	0.95	1.00	1.00	0.95	1.00	
Satd. Flow (perm)	1805	3539	1615	1736	3574	1615	1805	3610	1615	1805	3373	
Peak-hour factor, PHF	1.00	1.00	1.00	1.00	1.00	1.00	1.00	1.00	1.00	1.00	1.00	1.00
Adj. Flow (vph)	75	1005	70	160	1290	165	100	345	270	200	185	130
RTOR Reduction (vph)	0	0	36	0	0	77	0	0	48	0	107	0
Lane Group Flow (vph)	75	1005	34	160	1290	88	100	345	222	200	208	0
Heavy Vehicles (%)	0%	2%	0%	4%	1%	0%	0%	0%	0%	0%	0%	1%
Turn Type	Prot		Perm	Prot		Perm	Prot		pt+ov	Prot		
Protected Phases	5	2		1	6		3	8	8 1	7	4	
Permitted Phases			2			6						
Actuated Green, G (s)	8.5	57.0	57.0	14.1	62.6	62.6	10.9	17.0	35.6	14.0	20.1	
Effective Green, g (s)	8.5	58.4	58.4	14.1	64.0	64.0	10.9	17.5	35.6	14.0	20.6	
Actuated g/C Ratio	0.07	0.49	0.49	0.12	0.53	0.53	0.09	0.15	0.30	0.12	0.17	
Clearance Time (s)	4.0	5.4	5.4	4.0	5.4	5.4	4.0	4.5		4.0	4.5	
Vehicle Extension (s)	2.3	4.4	4.4	2.3	4.4	4.4	2.3	2.3		2.3	2.3	
Lane Grp Cap (vph)	128	1722	786	204	1906	861	164	526	479	211	579	
v/s Ratio Prot	0.04	0.28		c0.09	c0.36		0.06	c0.10	0.14	c0.11	c0.06	
v/s Ratio Perm			0.02			0.05						
v/c Ratio	0.59	0.58	0.04	0.78	0.68	0.10	0.61	0.66	0.46	0.95	0.36	
Uniform Delay, d1	54.0	22.1	16.2	51.5	20.4	13.8	52.5	48.4	34.4	52.6	43.9	
Progression Factor	1.00	1.00	1.00	0.84	0.79	1.18	1.00	1.00	1.00	1.00	1.00	
Incremental Delay, d2	5.1	1.5	0.1	10.0	1.1	0.1	4.9	2.5	0.4	46.7	0.2	
Delay (s)	59.1	23.5	16.3	53.2	17.2	16.4	57.4	50.9	34.8	99.3	44.1	
Level of Service	E	C	B	D	B	B	E	D	C	F	D	
Approach Delay (s)		25.4			20.7			45.7			65.5	
Approach LOS		C			C			D			E	

Intersection Summary			
HCM Average Control Delay	32.3	HCM Level of Service	C
HCM Volume to Capacity ratio	0.73		
Actuated Cycle Length (s)	120.0	Sum of lost time (s)	16.0
Intersection Capacity Utilization	73.8%	ICU Level of Service	D
Analysis Period (min)	15		

c Critical Lane Group

Movement	EBL	EBT	EBR	WBL	WBT	WBR	NBL	NBT	NBR	SBL	SBT	SBR
Lane Configurations												
Volume (veh/h)	325	5	15	5	5	5	10	385	5	5	150	260
Sign Control		Stop			Stop			Free			Free	
Grade		0%			0%			0%			0%	
Peak Hour Factor	1.00	1.00	1.00	1.00	1.00	1.00	1.00	1.00	1.00	1.00	1.00	1.00
Hourly flow rate (vph)	325	5	15	5	5	5	10	385	5	5	150	260
Pedestrians												
Lane Width (ft)												
Walking Speed (ft/s)												
Percent Blockage												
Right turn flare (veh)												
Median type								None			None	
Median storage veh)												
Upstream signal (ft)											280	
pX, platoon unblocked												
vC, conflicting volume	572	570	150	585	828	388	410			390		
vC1, stage 1 conf vol												
vC2, stage 2 conf vol												
vCu, unblocked vol	572	570	150	585	828	388	410			390		
tC, single (s)	7.1	6.5	6.2	7.1	6.5	6.2	4.1			4.1		
tC, 2 stage (s)												
tF (s)	3.5	4.0	3.3	3.5	4.0	3.3	2.2			2.2		
p0 queue free %	23	99	98	99	98	99	99			100		
cM capacity (veh/h)	421	429	902	411	305	665	1160			1180		

Direction, Lane #	EB 1	EB 2	WB 1	NB 1	NB 2	SB 1	SB 2	SB 3
Volume Total	325	20	15	10	390	5	150	260
Volume Left	325	0	5	10	0	5	0	0
Volume Right	0	15	5	0	5	0	0	260
cSH	421	707	416	1160	1700	1180	1700	1700
Volume to Capacity	0.77	0.03	0.04	0.01	0.23	0.00	0.09	0.15
Queue Length 95th (ft)	164	2	3	1	0	0	0	0
Control Delay (s)	37.1	10.2	14.0	8.1	0.0	8.1	0.0	0.0
Lane LOS	E	B	B	A		A		
Approach Delay (s)	35.6		14.0	0.2		0.1		
Approach LOS	E		B					

Intersection Summary			
Average Delay	10.7		
Intersection Capacity Utilization	51.9%	ICU Level of Service	A
Analysis Period (min)	15		

Movement	EBL	EBT	EBR	WBL	WBT	WBR	NBL	NBT	NBR	SBL	SBT	SBR
Lane Configurations												
Volume (vph)	275	1300	65	75	1365	25	75	60	155	115	65	105
Ideal Flow (vphpl)	1900	1900	1900	1900	1900	1900	1900	1900	1900	1900	1900	1900
Total Lost time (s)	4.0	4.0	4.0	4.0	4.0		4.0	4.0		4.0	4.0	
Lane Util. Factor	1.00	0.95	1.00	1.00	0.95		1.00	1.00		1.00	1.00	
Frt	1.00	1.00	0.85	1.00	1.00		1.00	0.89		1.00	0.91	
Flt Protected	0.95	1.00	1.00	0.95	1.00		0.95	1.00		0.95	1.00	
Satd. Flow (prot)	1703	3406	1495	1641	3430		1597	1420		1752	1697	
Flt Permitted	0.95	1.00	1.00	0.95	1.00		0.95	1.00		0.95	1.00	
Satd. Flow (perm)	1703	3406	1495	1641	3430		1597	1420		1752	1697	
Peak-hour factor, PHF	1.00	1.00	1.00	1.00	1.00	1.00	1.00	1.00	1.00	1.00	1.00	1.00
Adj. Flow (vph)	275	1300	65	75	1365	25	75	60	155	115	65	105
RTOR Reduction (vph)	0	0	17	0	1	0	0	89	0	0	52	0
Lane Group Flow (vph)	275	1300	48	75	1389	0	75	126	0	115	118	0
Heavy Vehicles (%)	6%	6%	8%	10%	5%	3%	13%	15%	21%	3%	1%	2%
Turn Type	Prot		Perm	Prot			Prot			Prot		
Protected Phases	5	2		1	6		3	8		7	4	
Permitted Phases			2									
Actuated Green, G (s)	15.0	64.7	64.7	9.8	59.5		9.3	16.7		10.9	18.3	
Effective Green, g (s)	15.0	66.1	66.1	9.8	60.9		9.3	17.2		10.9	18.8	
Actuated g/C Ratio	0.12	0.55	0.55	0.08	0.51		0.08	0.14		0.09	0.16	
Clearance Time (s)	4.0	5.4	5.4	4.0	5.4		4.0	4.5		4.0	4.5	
Vehicle Extension (s)	2.3	4.5	4.5	2.3	4.5		2.5	2.5		2.5	2.5	
Lane Grp Cap (vph)	213	1876	823	134	1741		124	204		159	266	
v/s Ratio Prot	c0.16	0.38		0.05	c0.40		0.05	c0.09		c0.07	0.07	
v/s Ratio Perm			0.03									
v/c Ratio	1.29	0.69	0.06	0.56	0.80		0.60	0.62		0.72	0.44	
Uniform Delay, d1	52.5	19.6	12.5	53.0	24.5		53.6	48.3		53.1	45.9	
Progression Factor	0.91	0.76	0.48	1.23	0.74		1.00	1.00		1.00	1.00	
Incremental Delay, d2	153.6	1.5	0.1	3.0	3.3		6.8	4.7		14.1	0.9	
Delay (s)	201.5	16.4	6.1	68.2	21.5		60.4	53.0		67.2	46.7	
Level of Service	F	B	A	E	C		E	D		E	D	
Approach Delay (s)		47.0			23.9			54.9			55.0	
Approach LOS		D			C			D			D	

Intersection Summary			
HCM Average Control Delay	39.0	HCM Level of Service	D
HCM Volume to Capacity ratio	0.83		
Actuated Cycle Length (s)	120.0	Sum of lost time (s)	16.0
Intersection Capacity Utilization	86.2%	ICU Level of Service	E
Analysis Period (min)	15		

c Critical Lane Group

Movement	EBL	EBR	NBL	NBT	SBT	SBR
Lane Configurations						
Volume (veh/h)	225	90	135	1270	675	100
Sign Control	Stop			Free	Free	
Grade	0%			0%	0%	
Peak Hour Factor	1.00	1.00	1.00	1.00	1.00	1.00
Hourly flow rate (vph)	225	90	135	1270	675	100
Pedestrians						
Lane Width (ft)						
Walking Speed (ft/s)						
Percent Blockage						
Right turn flare (veh)						
Median type				None	TWLTL	
Median storage veh)					2	
Upstream signal (ft)					618	
pX, platoon unblocked	0.88	0.88	0.88			
vC, conflicting volume	1630	388	775			
vC1, stage 1 conf vol	725					
vC2, stage 2 conf vol	905					
vCu, unblocked vol	1440	24	466			
tC, single (s)	6.8	6.9	4.1			
tC, 2 stage (s)	5.8					
tF (s)	3.5	3.3	2.2			
p0 queue free %	17	90	86			
cM capacity (veh/h)	272	918	959			

Direction, Lane #	EB 1	NB 1	NB 2	NB 3	SB 1	SB 2
Volume Total	315	135	635	635	450	325
Volume Left	225	135	0	0	0	0
Volume Right	90	0	0	0	0	100
cSH	341	959	1700	1700	1700	1700
Volume to Capacity	0.92	0.14	0.37	0.37	0.26	0.19
Queue Length 95th (ft)	234	12	0	0	0	0
Control Delay (s)	67.0	9.4	0.0	0.0	0.0	0.0
Lane LOS	F	A				
Approach Delay (s)	67.0	0.9			0.0	
Approach LOS	F					

Intersection Summary			
Average Delay	9.0		
Intersection Capacity Utilization	60.6%	ICU Level of Service	B
Analysis Period (min)	15		

Movement	EBL	EBT	EBR	WBL	WBT	WBR	NBL	NBT	NBR	SBL	SBT	SBR
Lane Configurations												
Volume (vph)	50	1295	60	75	1210	110	120	130	105	80	25	35
Ideal Flow (vphpl)	1900	1900	1900	1900	1900	1900	1900	1900	1900	1900	1900	1900
Total Lost time (s)	4.0	4.0		4.0	4.0	4.0		4.0			4.0	4.0
Lane Util. Factor	1.00	0.95		1.00	0.95	1.00		1.00			1.00	1.00
Frt	1.00	0.99		1.00	1.00	0.85		0.96			1.00	0.85
Flt Protected	0.95	1.00		0.95	1.00	1.00		0.98			0.96	1.00
Satd. Flow (prot)	1805	3519		1770	3539	1568		1753			1763	1615
Flt Permitted	0.95	1.00		0.95	1.00	1.00		0.72			0.42	1.00
Satd. Flow (perm)	1805	3519		1770	3539	1568		1278			760	1615
Peak-hour factor, PHF	1.00	1.00	1.00	1.00	1.00	1.00	1.00	1.00	1.00	1.00	1.00	1.00
Adj. Flow (vph)	50	1295	60	75	1210	110	120	130	105	80	25	35
RTOR Reduction (vph)	0	2	0	0	0	11	0	13	0	0	0	30
Lane Group Flow (vph)	50	1353	0	75	1210	99	0	342	0	0	105	5
Heavy Vehicles (%)	0%	2%	0%	2%	2%	3%	0%	4%	3%	5%	0%	0%
Turn Type	Prot			Prot		Perm	Perm			Perm		Perm
Protected Phases	5	2		1	6			8			4	
Permitted Phases						6	8			4		4
Actuated Green, G (s)	7.1	81.8		8.8	83.5	83.5		16.0			14.8	14.8
Effective Green, g (s)	7.1	83.2		8.8	84.9	84.9		16.0			16.0	16.0
Actuated g/C Ratio	0.06	0.69		0.07	0.71	0.71		0.13			0.13	0.13
Clearance Time (s)	4.0	5.4		4.0	5.4	5.4		4.0			5.2	5.2
Vehicle Extension (s)	2.3	4.5		2.3	4.5	4.5		2.5			2.5	2.5
Lane Grp Cap (vph)	107	2440		130	2504	1109		170			101	215
v/s Ratio Prot	0.03	c0.38		0.04	c0.34							
v/s Ratio Perm						0.06		c0.27			0.14	0.00
v/c Ratio	0.47	0.55		0.58	0.48	0.09		2.01			1.04	0.02
Uniform Delay, d1	54.6	9.2		53.8	7.8	5.5		52.0			52.0	45.2
Progression Factor	0.96	1.02		1.24	1.61	1.27		1.00			1.00	1.00
Incremental Delay, d2	1.4	0.7		2.5	0.4	0.1		475.5			100.7	0.0
Delay (s)	54.0	10.0		69.4	12.9	7.1		527.5			152.7	45.2
Level of Service	D	B		E	B	A		F			F	D
Approach Delay (s)		11.6			15.5			527.5			125.8	
Approach LOS		B			B			F			F	

Intersection Summary			
HCM Average Control Delay	73.7	HCM Level of Service	E
HCM Volume to Capacity ratio	0.75		
Actuated Cycle Length (s)	120.0	Sum of lost time (s)	8.0
Intersection Capacity Utilization	78.4%	ICU Level of Service	D
Analysis Period (min)	15		

c Critical Lane Group

Movement	WBL	WBR	NBT	NBR	SBL	SBT
Lane Configurations						
Volume (veh/h)	45	200	625	145	145	185
Sign Control	Stop		Free			Free
Grade	0%		0%			0%
Peak Hour Factor	1.00	1.00	1.00	1.00	1.00	1.00
Hourly flow rate (vph)	45	200	625	145	145	185
Pedestrians						
Lane Width (ft)						
Walking Speed (ft/s)						
Percent Blockage						
Right turn flare (veh)						
Median type			None			None
Median storage veh)						
Upstream signal (ft)						
pX, platoon unblocked						
vC, conflicting volume	1172	698			770	
vC1, stage 1 conf vol						
vC2, stage 2 conf vol						
vCu, unblocked vol	1172	698			770	
tC, single (s)	6.4	6.2			4.1	
tC, 2 stage (s)						
tF (s)	3.5	3.3			2.2	
p0 queue free %	75	55			83	
cM capacity (veh/h)	178	444			854	

Direction, Lane #	WB 1	WB 2	NB 1	SB 1	SB 2
Volume Total	45	200	770	145	185
Volume Left	45	0	0	145	0
Volume Right	0	200	145	0	0
cSH	178	444	1700	854	1700
Volume to Capacity	0.25	0.45	0.45	0.17	0.11
Queue Length 95th (ft)	24	57	0	15	0
Control Delay (s)	31.9	19.6	0.0	10.1	0.0
Lane LOS	D	C		B	
Approach Delay (s)	21.8		0.0	4.4	
Approach LOS	C				

Intersection Summary			
Average Delay	5.1		
Intersection Capacity Utilization	64.3%	ICU Level of Service	C
Analysis Period (min)	15		

Movement	EBL	EBT	EBR	WBL	WBT	WBR	NBL	NBT	NBR	SBL	SBT	SBR
Lane Configurations												
Volume (vph)	175	345	65	115	300	285	135	850	70	135	315	125
Ideal Flow (vphpl)	1900	1900	1900	1900	1900	1900	1900	1900	1900	1900	1900	1900
Total Lost time (s)	4.0	4.0		4.0	4.0		4.0	4.0		4.0	4.0	
Lane Util. Factor	1.00	1.00		1.00	1.00		1.00	0.95		1.00	0.95	
Frt	1.00	0.98		1.00	0.93		1.00	0.99		1.00	0.96	
Flt Protected	0.95	1.00		0.95	1.00		0.95	1.00		0.95	1.00	
Satd. Flow (prot)	1805	1855		1805	1761		1805	3569		1805	3456	
Flt Permitted	0.95	1.00		0.95	1.00		0.40	1.00		0.10	1.00	
Satd. Flow (perm)	1805	1855		1805	1761		752	3569		187	3456	
Peak-hour factor, PHF	1.00	1.00	1.00	1.00	1.00	1.00	1.00	1.00	1.00	1.00	1.00	1.00
Adj. Flow (vph)	175	345	65	115	300	285	135	850	70	135	315	125
RTOR Reduction (vph)	0	5	0	0	24	0	0	4	0	0	30	0
Lane Group Flow (vph)	175	405	0	115	561	0	135	916	0	135	410	0
Heavy Vehicles (%)	0%	0%	0%	0%	0%	0%	0%	0%	0%	0%	0%	0%
Turn Type	Prot			Prot			pm+pt			pm+pt		
Protected Phases	3	8		7	4		1	6		5	2	
Permitted Phases							6			2		
Actuated Green, G (s)	14.3	51.0		10.8	47.5		46.3	38.5		48.5	39.6	
Effective Green, g (s)	15.3	52.4		11.8	48.9		48.3	40.0		50.5	41.1	
Actuated g/C Ratio	0.12	0.40		0.09	0.38		0.37	0.31		0.39	0.32	
Clearance Time (s)	5.0	5.4		5.0	5.4		5.0	5.5		5.0	5.5	
Vehicle Extension (s)	0.2	5.0		0.2	8.0		0.2	5.0		0.2	5.0	
Lane Grp Cap (vph)	212	747		164	662		350	1097		196	1092	
v/s Ratio Prot	c0.10	c0.22		0.06	c0.32		0.03	c0.26		c0.05	0.12	
v/s Ratio Perm							0.12			0.22		
v/c Ratio	0.83	0.54		0.70	0.85		0.39	0.83		0.69	0.38	
Uniform Delay, d1	56.1	29.7		57.4	37.2		28.1	42.0		30.6	34.5	
Progression Factor	1.00	1.00		1.00	1.00		1.00	1.00		1.00	1.00	
Incremental Delay, d2	21.3	1.4		10.5	12.1		0.3	6.2		7.8	0.5	
Delay (s)	77.4	31.1		68.0	49.3		28.3	48.2		38.4	35.0	
Level of Service	E	C		E	D		C	D		D	C	
Approach Delay (s)		45.0			52.4			45.7			35.8	
Approach LOS		D			D			D			D	

Intersection Summary			
HCM Average Control Delay	45.2	HCM Level of Service	D
HCM Volume to Capacity ratio	0.85		
Actuated Cycle Length (s)	130.1	Sum of lost time (s)	20.0
Intersection Capacity Utilization	89.4%	ICU Level of Service	E
Analysis Period (min)	15		

c Critical Lane Group

Movement	EBL	EBT	WBT	WBR	SBL	SBR
Lane Configurations						
Volume (vph)	180	1230	1175	690	530	190
Ideal Flow (vphpl)	1900	1900	1900	1900	1900	1900
Total Lost time (s)	4.0	4.0	4.0		4.0	5.0
Lane Util. Factor	1.00	0.95	0.95		0.97	1.00
Frt	1.00	1.00	0.94		1.00	0.85
Flt Protected	0.95	1.00	1.00		0.95	1.00
Satd. Flow (prot)	1671	3610	3364		3433	1583
Flt Permitted	0.95	1.00	1.00		0.95	1.00
Satd. Flow (perm)	1671	3610	3364		3433	1583
Peak-hour factor, PHF	1.00	1.00	1.00	1.00	1.00	1.00
Adj. Flow (vph)	180	1230	1175	690	530	190
RTOR Reduction (vph)	0	0	65	0	0	41
Lane Group Flow (vph)	180	1230	1800	0	530	149
Heavy Vehicles (%)	8%	0%	1%	2%	2%	2%
Turn Type	Prot					custom
Protected Phases	5	2	6		7	4 5
Permitted Phases						
Actuated Green, G (s)	14.9	88.1	69.2		22.5	41.4
Effective Green, g (s)	14.9	89.5	70.6		22.5	41.4
Actuated g/C Ratio	0.12	0.75	0.59		0.19	0.34
Clearance Time (s)	4.0	5.4	5.4		4.0	
Vehicle Extension (s)	2.3	4.5	4.5		2.3	
Lane Grp Cap (vph)	207	2692	1979		644	546
v/s Ratio Prot	c0.11	0.34	c0.54		c0.15	0.09
v/s Ratio Perm						
v/c Ratio	0.87	0.46	0.91		0.82	0.27
Uniform Delay, d1	51.6	5.9	21.9		46.8	28.4
Progression Factor	0.92	0.66	0.68		1.00	1.00
Incremental Delay, d2	23.1	0.4	0.8		8.1	0.2
Delay (s)	70.7	4.3	15.6		55.0	28.6
Level of Service	E	A	B		D	C
Approach Delay (s)		12.8	15.6		48.0	
Approach LOS		B	B		D	

Intersection Summary			
HCM Average Control Delay	20.4	HCM Level of Service	C
HCM Volume to Capacity ratio	0.89		
Actuated Cycle Length (s)	120.0	Sum of lost time (s)	12.0
Intersection Capacity Utilization	89.7%	ICU Level of Service	E
Analysis Period (min)	15		

c Critical Lane Group

Movement	EBL	EBT	EBR	WBL	WBT	WBR	NBL	NBT	NBR	SBL	SBT	SBR
Lane Configurations												
Volume (vph)	80	95	145	290	65	160	150	675	80	20	295	40
Ideal Flow (vphpl)	1900	1900	1900	1900	1900	1900	1900	1900	1900	1900	1900	1900
Total Lost time (s)	4.0	4.0		4.0	4.0		4.0	4.0		4.0	4.0	
Lane Util. Factor	1.00	1.00		1.00	1.00		1.00	0.95		1.00	0.95	
Frt	1.00	0.91		1.00	0.89		1.00	0.98		1.00	0.98	
Flt Protected	0.95	1.00		0.95	1.00		0.95	1.00		0.95	1.00	
Satd. Flow (prot)	1770	1694		1770	1664		1770	3483		1770	3476	
Flt Permitted	0.62	1.00		0.31	1.00		0.38	1.00		0.33	1.00	
Satd. Flow (perm)	1151	1694		577	1664		712	3483		616	3476	
Peak-hour factor, PHF	1.00	1.00	1.00	1.00	1.00	1.00	1.00	1.00	1.00	1.00	1.00	1.00
Adj. Flow (vph)	80	95	145	290	65	160	150	675	80	20	295	40
RTOR Reduction (vph)	0	48	0	0	80	0	0	8	0	0	10	0
Lane Group Flow (vph)	80	192	0	290	145	0	150	747	0	20	325	0
Turn Type	pm+pt			pm+pt			pm+pt			pm+pt		
Protected Phases	3	8		7	4		1	6		5	2	
Permitted Phases	8			4			6			2		
Actuated Green, G (s)	18.4	13.8		34.0	25.4		28.7	23.5		16.8	15.6	
Effective Green, g (s)	18.4	13.8		34.0	25.4		28.7	23.5		16.8	15.6	
Actuated g/C Ratio	0.26	0.20		0.48	0.36		0.41	0.33		0.24	0.22	
Clearance Time (s)	4.0	4.0		4.0	4.0		4.0	4.0		4.0	4.0	
Vehicle Extension (s)	2.5	2.5		2.5	2.5		2.5	2.5		2.5	2.5	
Lane Grp Cap (vph)	340	331		551	598		425	1158		166	767	
v/s Ratio Prot	0.02	0.11		c0.12	0.09		c0.05	c0.21		0.00	0.09	
v/s Ratio Perm	0.05			c0.13			0.10			0.03		
v/c Ratio	0.24	0.58		0.53	0.24		0.35	0.65		0.12	0.42	
Uniform Delay, d1	20.3	25.8		12.1	15.9		13.9	20.1		20.8	23.7	
Progression Factor	1.00	1.00		1.00	1.00		1.00	1.00		1.00	1.00	
Incremental Delay, d2	0.3	2.0		0.7	0.2		0.4	1.1		0.2	0.3	
Delay (s)	20.5	27.8		12.8	16.1		14.3	21.2		21.0	24.0	
Level of Service	C	C		B	B		B	C		C	C	
Approach Delay (s)		26.0			14.2			20.0			23.8	
Approach LOS		C			B			C			C	

Intersection Summary			
HCM Average Control Delay	20.1	HCM Level of Service	C
HCM Volume to Capacity ratio	0.57		
Actuated Cycle Length (s)	70.7	Sum of lost time (s)	12.0
Intersection Capacity Utilization	67.8%	ICU Level of Service	C
Analysis Period (min)	15		
c Critical Lane Group			

Movement	EBL	EBT	EBR	WBL	WBT	WBR	NBL	NBT	NBR	SBL	SBT	SBR
Lane Configurations												
Volume (vph)	10	1465	260	65	1295	25	520	360	90	40	100	15
Ideal Flow (vphpl)	1900	1900	1900	1900	1900	1900	1900	1900	1900	1900	1900	1900
Total Lost time (s)	4.0	4.0		4.0	4.0	4.0	4.0	4.0		4.0	4.0	
Lane Util. Factor	1.00	0.95		1.00	0.95	1.00	1.00	1.00		1.00	1.00	
Frt	1.00	0.98		1.00	1.00	0.85	1.00	0.97		1.00	0.98	
Flt Protected	0.95	1.00		0.95	1.00	1.00	0.95	1.00		0.95	1.00	
Satd. Flow (prot)	1641	3346		1671	3438	1615	1703	1782		1752	1730	
Flt Permitted	0.95	1.00		0.95	1.00	1.00	0.95	1.00		0.95	1.00	
Satd. Flow (perm)	1641	3346		1671	3438	1615	1703	1782		1752	1730	
Peak-hour factor, PHF	1.00	1.00	1.00	1.00	1.00	1.00	1.00	1.00	1.00	1.00	1.00	1.00
Adj. Flow (vph)	10	1465	260	65	1295	25	520	360	90	40	100	15
RTOR Reduction (vph)	0	11	0	0	0	5	0	8	0	0	5	0
Lane Group Flow (vph)	10	1714	0	65	1295	20	520	442	0	40	110	0
Heavy Vehicles (%)	10%	5%	8%	8%	5%	0%	6%	2%	9%	3%	7%	12%
Turn Type	Prot			Prot		Perm	Prot			Prot		
Protected Phases	5	2		1	6		3	8		7	4	
Permitted Phases						6						
Actuated Green, G (s)	0.8	56.1		10.4	65.7	65.7	13.0	33.1		3.2	23.3	
Effective Green, g (s)	0.8	56.8		10.4	66.4	66.4	13.0	33.6		3.2	23.8	
Actuated g/C Ratio	0.01	0.47		0.09	0.55	0.55	0.11	0.28		0.03	0.20	
Clearance Time (s)	4.0	4.7		4.0	4.7	4.7	4.0	4.5		4.0	4.5	
Vehicle Extension (s)	2.3	4.5		2.3	4.5	4.5	2.5	2.5		2.5	2.5	
Lane Grp Cap (vph)	11	1584		145	1902	894	184	499		47	343	
v/s Ratio Prot	0.01	c0.51		0.04	c0.38		c0.31	c0.25		0.02	0.06	
v/s Ratio Perm						0.01						
v/c Ratio	0.91	1.08		0.45	0.68	0.02	2.83	0.89		0.85	0.32	
Uniform Delay, d1	59.6	31.6		52.1	19.2	12.1	53.5	41.4		58.2	41.2	
Progression Factor	1.00	1.45		1.05	1.22	1.22	1.00	1.00		1.00	1.00	
Incremental Delay, d2	198.8	47.0		1.1	1.7	0.0	836.6	16.9		76.6	0.4	
Delay (s)	258.5	92.9		55.7	25.2	14.9	890.1	58.3		134.8	41.6	
Level of Service	F	F		E	C	B	F	E		F	D	
Approach Delay (s)		93.8			26.5			504.2			65.6	
Approach LOS		F			C			F			E	

Intersection Summary			
HCM Average Control Delay	164.6	HCM Level of Service	F
HCM Volume to Capacity ratio	1.16		
Actuated Cycle Length (s)	120.0	Sum of lost time (s)	8.0
Intersection Capacity Utilization	96.2%	ICU Level of Service	F
Analysis Period (min)	15		

c Critical Lane Group

Movement	EBL	EBT	EBR	WBL	WBT	WBR	NBL	NBT	NBR	SBL	SBT	SBR
Lane Configurations												
Sign Control		Stop			Stop			Stop			Stop	
Volume (vph)	100	60	80	15	55	65	65	270	80	155	55	100
Peak Hour Factor	1.00	1.00	1.00	1.00	1.00	1.00	1.00	1.00	1.00	1.00	1.00	1.00
Hourly flow rate (vph)	100	60	80	15	55	65	65	270	80	155	55	100

Direction, Lane #	EB 1	WB 1	NB 1	NB 2	SB 1	SB 2
Volume Total (vph)	240	135	65	350	155	155
Volume Left (vph)	100	15	65	0	155	0
Volume Right (vph)	80	65	0	80	0	100
Hadj (s)	-0.08	-0.23	0.53	-0.13	0.53	-0.42
Departure Headway (s)	6.0	6.1	6.7	6.1	6.9	5.9
Degree Utilization, x	0.40	0.23	0.12	0.59	0.30	0.25
Capacity (veh/h)	548	515	510	562	491	567
Control Delay (s)	13.0	11.0	9.5	16.2	11.6	9.7
Approach Delay (s)	13.0	11.0	15.1		10.6	
Approach LOS	B	B	C		B	

Intersection Summary			
Delay	12.9		
HCM Level of Service	B		
Intersection Capacity Utilization	59.2%	ICU Level of Service	B
Analysis Period (min)	15		

Movement	WBL	WBR	NBT	NBR	SBL	SBT
Lane Configurations						
Volume (veh/h)	65	300	740	95	280	275
Sign Control	Stop		Free			Free
Grade	0%		0%			0%
Peak Hour Factor	1.00	1.00	1.00	1.00	1.00	1.00
Hourly flow rate (vph)	65	300	740	95	280	275
Pedestrians						
Lane Width (ft)						
Walking Speed (ft/s)						
Percent Blockage						
Right turn flare (veh)						
Median type			None			None
Median storage veh)						
Upstream signal (ft)						718
pX, platoon unblocked						
vC, conflicting volume	1622	788			835	
vC1, stage 1 conf vol						
vC2, stage 2 conf vol						
vCu, unblocked vol	1622	788			835	
tC, single (s)	6.4	6.2			4.1	
tC, 2 stage (s)						
tF (s)	3.5	3.3			2.2	
p0 queue free %	11	23			65	
cM capacity (veh/h)	73	391			798	

Direction, Lane #	WB 1	NB 1	SB 1	SB 2
Volume Total	365	835	280	275
Volume Left	65	0	280	0
Volume Right	300	95	0	0
cSH	221	1700	798	1700
Volume to Capacity	1.65	0.49	0.35	0.16
Queue Length 95th (ft)	594	0	40	0
Control Delay (s)	351.5	0.0	11.9	0.0
Lane LOS	F		B	
Approach Delay (s)	351.5	0.0	6.0	
Approach LOS	F			

Intersection Summary			
Average Delay	75.0		
Intersection Capacity Utilization	93.6%	ICU Level of Service	F
Analysis Period (min)	15		

Movement	EBL	EBT	EBR	WBL	WBT	WBR	NBL	NBT	NBR	SBL	SBT	SBR
Lane Configurations												
Volume (vph)	35	1300	165	175	1020	120	275	440	330	210	165	45
Ideal Flow (vphpl)	1900	1900	1900	1900	1900	1900	1900	1900	1900	1900	1900	1900
Total Lost time (s)	4.0	4.0	4.0	4.0	4.0	4.0	4.0	4.0	4.0	4.0	4.0	
Lane Util. Factor	1.00	0.95	1.00	1.00	0.95	1.00	1.00	1.00	1.00	1.00	1.00	
Frt	1.00	1.00	0.85	1.00	1.00	0.85	1.00	1.00	0.85	1.00	0.97	
Flt Protected	0.95	1.00	1.00	0.95	1.00	1.00	0.95	1.00	1.00	0.95	1.00	
Satd. Flow (prot)	1805	3574	1615	1805	3539	1615	1787	1900	1615	1805	1810	
Flt Permitted	0.95	1.00	1.00	0.95	1.00	1.00	0.95	1.00	1.00	0.95	1.00	
Satd. Flow (perm)	1805	3574	1615	1805	3539	1615	1787	1900	1615	1805	1810	
Peak-hour factor, PHF	1.00	1.00	1.00	1.00	1.00	1.00	1.00	1.00	1.00	1.00	1.00	1.00
Adj. Flow (vph)	35	1300	165	175	1020	120	275	440	330	210	165	45
RTOR Reduction (vph)	0	0	69	0	0	29	0	0	188	0	9	0
Lane Group Flow (vph)	35	1300	96	175	1020	91	275	440	142	210	201	0
Heavy Vehicles (%)	0%	1%	0%	0%	2%	0%	1%	0%	0%	0%	2%	0%
Turn Type	Prot		Perm	Prot		Perm	Prot		Perm	Prot		
Protected Phases	5	2		1	6		7	4		3	8	
Permitted Phases			2			6			4			
Actuated Green, G (s)	5.0	48.7	48.7	14.6	58.3	58.3	21.5	16.9	16.9	21.9	17.3	
Effective Green, g (s)	5.0	50.1	50.1	14.6	59.7	59.7	21.5	17.4	17.4	21.9	17.8	
Actuated g/C Ratio	0.04	0.42	0.42	0.12	0.50	0.50	0.18	0.14	0.14	0.18	0.15	
Clearance Time (s)	4.0	5.4	5.4	4.0	5.4	5.4	4.0	4.5	4.5	4.0	4.5	
Vehicle Extension (s)	2.3	4.5	4.5	2.3	4.5	4.5	2.3	2.3	2.3	2.3	2.3	
Lane Grp Cap (vph)	75	1492	674	220	1761	803	320	276	234	329	268	
v/s Ratio Prot	0.02	c0.36		c0.10	0.29		c0.15	c0.23		0.12	0.11	
v/s Ratio Perm			0.06			0.06			0.09			
v/c Ratio	0.47	0.87	0.14	0.80	0.58	0.11	0.86	1.59	0.61	0.64	0.75	
Uniform Delay, d1	56.2	32.0	21.6	51.2	21.3	16.1	47.8	51.3	48.1	45.4	49.0	
Progression Factor	1.50	0.38	0.22	1.00	1.00	1.00	1.00	1.00	1.00	1.00	1.00	
Incremental Delay, d2	2.1	5.9	0.4	17.0	1.4	0.3	19.5	283.9	3.4	3.3	10.5	
Delay (s)	86.2	18.0	5.1	68.3	22.7	16.3	67.3	335.2	51.5	48.7	59.5	
Level of Service	F	B	A	E	C	B	E	F	D	D	E	
Approach Delay (s)		18.2			28.2			175.1			54.1	
Approach LOS		B			C			F			D	

Intersection Summary			
HCM Average Control Delay	63.1	HCM Level of Service	E
HCM Volume to Capacity ratio	0.98		
Actuated Cycle Length (s)	120.0	Sum of lost time (s)	16.0
Intersection Capacity Utilization	93.8%	ICU Level of Service	F
Analysis Period (min)	15		

c Critical Lane Group

Movement	WBL	WBR	NBT	NBR	SBL	SBT
Lane Configurations						
Volume (veh/h)	75	215	1190	155	140	625
Sign Control	Stop		Free			Free
Grade	0%		0%			0%
Peak Hour Factor	1.00	1.00	1.00	1.00	1.00	1.00
Hourly flow rate (vph)	75	215	1190	155	140	625
Pedestrians						
Lane Width (ft)						
Walking Speed (ft/s)						
Percent Blockage						
Right turn flare (veh)						
Median type			None			None
Median storage veh)						
Upstream signal (ft)						839
pX, platoon unblocked	1.00					
vC, conflicting volume	1860	672			1345	
vC1, stage 1 conf vol						
vC2, stage 2 conf vol						
vCu, unblocked vol	1855	672			1345	
tC, single (s)	6.8	6.9			4.1	
tC, 2 stage (s)						
tF (s)	3.5	3.3			2.2	
p0 queue free %	0	46			72	
cM capacity (veh/h)	47	398			508	

Direction, Lane #	WB 1	NB 1	NB 2	SB 1	SB 2	SB 3
Volume Total	290	793	552	140	312	312
Volume Left	75	0	0	140	0	0
Volume Right	215	0	155	0	0	0
cSH	136	1700	1700	508	1700	1700
Volume to Capacity	2.13	0.47	0.32	0.28	0.18	0.18
Queue Length 95th (ft)	595	0	0	28	0	0
Control Delay (s)	586.9	0.0	0.0	14.8	0.0	0.0
Lane LOS	F			B		
Approach Delay (s)	586.9	0.0		2.7		
Approach LOS	F					

Intersection Summary			
Average Delay	71.8		
Intersection Capacity Utilization	74.2%	ICU Level of Service	D
Analysis Period (min)	15		

Movement	EBL	EBT	EBR	WBL	WBT	WBR	NBL	NBT	NBR	SBL	SBT	SBR
Lane Configurations												
Volume (vph)	175	1535	170	120	960	135	325	1010	160	185	485	125
Ideal Flow (vphpl)	1900	1900	1900	1900	1900	1900	1900	1900	1900	1900	1900	1900
Total Lost time (s)	4.0	4.0		4.0	4.0		4.0	4.0	4.0	4.0	4.0	4.0
Lane Util. Factor	1.00	0.95		1.00	0.95		1.00	0.95	1.00	1.00	0.95	1.00
Frt	1.00	0.99		1.00	0.98		1.00	1.00	0.85	1.00	1.00	0.85
Flt Protected	0.95	1.00		0.95	1.00		0.95	1.00	1.00	0.95	1.00	1.00
Satd. Flow (prot)	1787	3556		1805	3512		1805	3610	1615	1805	3574	1615
Flt Permitted	0.95	1.00		0.95	1.00		0.95	1.00	1.00	0.95	1.00	1.00
Satd. Flow (perm)	1787	3556		1805	3512		1805	3610	1615	1805	3574	1615
Peak-hour factor, PHF	1.00	1.00	1.00	1.00	1.00	1.00	1.00	1.00	1.00	1.00	1.00	1.00
Adj. Flow (vph)	175	1535	170	120	960	135	325	1010	160	185	485	125
RTOR Reduction (vph)	0	7	0	0	9	0	0	0	15	0	0	58
Lane Group Flow (vph)	175	1698	0	120	1086	0	325	1010	145	185	485	67
Heavy Vehicles (%)	1%	0%	0%	0%	1%	0%	0%	0%	0%	0%	1%	0%
Turn Type	Prot			Prot			Prot		pm+ov	Prot		Perm
Protected Phases	5	2		1	6		3	8	1	7	4	
Permitted Phases									8			4
Actuated Green, G (s)	14.7	53.5		8.5	47.3		23.5	31.1	39.6	11.5	19.1	19.1
Effective Green, g (s)	14.2	54.0		8.0	47.8		23.0	31.6	38.6	11.0	19.6	19.6
Actuated g/C Ratio	0.12	0.45		0.07	0.40		0.19	0.26	0.32	0.09	0.16	0.16
Clearance Time (s)	3.5	4.5		3.5	4.5		3.5	4.5	3.5	3.5	4.5	4.5
Vehicle Extension (s)	2.3	4.3		2.3	4.3		2.3	2.3	2.3	2.3	2.3	2.3
Lane Grp Cap (vph)	210	1592		120	1392		344	946	517	165	581	262
v/s Ratio Prot	0.10	c0.48		c0.07	0.31		0.18	c0.28	0.02	c0.10	0.14	
v/s Ratio Perm									0.07			0.04
v/c Ratio	0.83	1.07		1.00	0.78		0.94	1.07	0.28	1.12	0.83	0.26
Uniform Delay, d1	52.0	33.3		56.3	31.8		48.2	44.5	30.6	54.8	48.9	44.1
Progression Factor	1.00	1.00		1.00	1.00		1.00	1.00	1.00	1.00	1.00	1.00
Incremental Delay, d2	23.1	42.6		82.2	4.4		34.0	49.1	0.2	106.3	9.8	0.3
Delay (s)	75.2	75.9		138.5	36.2		82.2	93.6	30.8	161.1	58.7	44.4
Level of Service	E	E		F	D		F	F	C	F	E	D
Approach Delay (s)		75.9			46.3			84.4			80.3	
Approach LOS		E			D			F			F	

Intersection Summary			
HCM Average Control Delay	72.2	HCM Level of Service	E
HCM Volume to Capacity ratio	1.07		
Actuated Cycle Length (s)	120.6	Sum of lost time (s)	16.0
Intersection Capacity Utilization	106.0%	ICU Level of Service	G
Analysis Period (min)	15		

c Critical Lane Group

Movement	WBL	WBR	NBT	NBR	SBL	SBT
Lane Configurations						
Volume (veh/h)	10	140	830	30	35	390
Sign Control	Stop		Free			Free
Grade	0%		0%			0%
Peak Hour Factor	1.00	1.00	1.00	1.00	1.00	1.00
Hourly flow rate (vph)	10	140	830	30	35	390
Pedestrians						
Lane Width (ft)						
Walking Speed (ft/s)						
Percent Blockage						
Right turn flare (veh)						
Median type			None			None
Median storage veh)						
Upstream signal (ft)						
pX, platoon unblocked						
vC, conflicting volume	1305	845			860	
vC1, stage 1 conf vol						
vC2, stage 2 conf vol						
vCu, unblocked vol	1305	845			860	
tC, single (s)	6.4	6.2			4.1	
tC, 2 stage (s)						
tF (s)	3.5	3.3			2.2	
p0 queue free %	94	62			96	
cM capacity (veh/h)	171	366			790	

Direction, Lane #	WB 1	NB 1	SB 1	SB 2
Volume Total	150	860	35	390
Volume Left	10	0	35	0
Volume Right	140	30	0	0
cSH	340	1700	790	1700
Volume to Capacity	0.44	0.51	0.04	0.23
Queue Length 95th (ft)	54	0	3	0
Control Delay (s)	23.7	0.0	9.8	0.0
Lane LOS	C		A	
Approach Delay (s)	23.7	0.0	0.8	
Approach LOS	C			

Intersection Summary			
Average Delay	2.7		
Intersection Capacity Utilization	61.4%	ICU Level of Service	B
Analysis Period (min)	15		

Movement	WBL	WBR	NBT	NBR	SBL	SBT
Lane Configurations						
Volume (veh/h)	30	165	695	20	5	400
Sign Control	Stop		Free			Free
Grade	0%		0%			0%
Peak Hour Factor	1.00	1.00	1.00	1.00	1.00	1.00
Hourly flow rate (vph)	30	165	695	20	5	400
Pedestrians						
Lane Width (ft)						
Walking Speed (ft/s)						
Percent Blockage						
Right turn flare (veh)						
Median type			None			None
Median storage veh)						
Upstream signal (ft)						
pX, platoon unblocked						
vC, conflicting volume	1115	705			715	
vC1, stage 1 conf vol						
vC2, stage 2 conf vol						
vCu, unblocked vol	1115	705			715	
tC, single (s)	6.4	6.2			4.1	
tC, 2 stage (s)						
tF (s)	3.5	3.3			2.2	
p0 queue free %	87	62			99	
cM capacity (veh/h)	231	440			895	

Direction, Lane #	WB 1	WB 2	NB 1	SB 1	SB 2
Volume Total	30	165	715	5	400
Volume Left	30	0	0	5	0
Volume Right	0	165	20	0	0
cSH	231	440	1700	895	1700
Volume to Capacity	0.13	0.38	0.42	0.01	0.24
Queue Length 95th (ft)	11	43	0	0	0
Control Delay (s)	22.9	18.0	0.0	9.0	0.0
Lane LOS	C	C		A	
Approach Delay (s)	18.8		0.0	0.1	
Approach LOS	C				

Intersection Summary			
Average Delay	2.8		
Intersection Capacity Utilization	55.1%	ICU Level of Service	B
Analysis Period (min)	15		

Movement	WBL	WBR	NBT	NBR	SBL	SBT
Lane Configurations						
Volume (veh/h)	60	185	530	10	70	360
Sign Control	Stop		Free			Free
Grade	0%		0%			0%
Peak Hour Factor	1.00	1.00	1.00	1.00	1.00	1.00
Hourly flow rate (vph)	60	185	530	10	70	360
Pedestrians						
Lane Width (ft)						
Walking Speed (ft/s)						
Percent Blockage						
Right turn flare (veh)						
Median type			TWLTL			TWLTL
Median storage veh)			2			2
Upstream signal (ft)						
pX, platoon unblocked						
vC, conflicting volume	1035	535			540	
vC1, stage 1 conf vol	535					
vC2, stage 2 conf vol	500					
vCu, unblocked vol	1035	535			540	
tC, single (s)	6.4	6.2			4.1	
tC, 2 stage (s)	5.4					
tF (s)	3.5	3.3			2.2	
p0 queue free %	87	66			93	
cM capacity (veh/h)	455	547			1034	

Direction, Lane #	WB 1	NB 1	SB 1	SB 2
Volume Total	245	540	70	360
Volume Left	60	0	70	0
Volume Right	185	10	0	0
cSH	521	1700	1034	1700
Volume to Capacity	0.47	0.32	0.07	0.21
Queue Length 95th (ft)	62	0	5	0
Control Delay (s)	17.9	0.0	8.7	0.0
Lane LOS	C		A	
Approach Delay (s)	17.9	0.0	1.4	
Approach LOS	C			

Intersection Summary			
Average Delay	4.1		
Intersection Capacity Utilization	57.5%	ICU Level of Service	B
Analysis Period (min)	15		

Movement	EBL	EBT	EBR	WBL	WBT	WBR	NBL	NBT	NBR	SBL	SBT	SBR
Lane Configurations												
Volume (veh/h)	20	10	95	5	15	15	340	520	5	15	280	125
Sign Control		Stop			Stop			Free			Free	
Grade		0%			0%			0%			0%	
Peak Hour Factor	1.00	1.00	1.00	1.00	1.00	1.00	1.00	1.00	1.00	1.00	1.00	1.00
Hourly flow rate (vph)	20	10	95	5	15	15	340	520	5	15	280	125
Pedestrians												
Lane Width (ft)												
Walking Speed (ft/s)												
Percent Blockage												
Right turn flare (veh)												
Median type								None			TWLTL	
Median storage veh)											2	
Upstream signal (ft)								1262				
pX, platoon unblocked												
vC, conflicting volume	1595	1578	342	1612	1638	522	405			525		
vC1, stage 1 conf vol	372	372		1202	1202							
vC2, stage 2 conf vol	1222	1205		410	435							
vCu, unblocked vol	1595	1578	342	1612	1638	522	405			525		
tC, single (s)	7.1	6.5	6.2	7.1	6.5	6.2	4.1			4.1		
tC, 2 stage (s)	6.1	5.5		6.1	5.5							
tF (s)	3.5	4.0	3.3	3.5	4.0	3.3	2.2			2.2		
p0 queue free %	84	94	87	96	90	97	71			99		
cM capacity (veh/h)	122	162	705	128	155	558	1165			1052		

Direction, Lane #	EB 1	WB 1	NB 1	NB 2	SB 1	SB 2
Volume Total	125	35	340	525	15	405
Volume Left	20	5	340	0	15	0
Volume Right	95	15	0	5	0	125
cSH	346	216	1165	1700	1052	1700
Volume to Capacity	0.36	0.16	0.29	0.31	0.01	0.24
Queue Length 95th (ft)	40	14	31	0	1	0
Control Delay (s)	21.2	24.9	9.4	0.0	8.5	0.0
Lane LOS	C	C	A		A	
Approach Delay (s)	21.2	24.9	3.7		0.3	
Approach LOS	C	C				

Intersection Summary			
Average Delay	4.7		
Intersection Capacity Utilization	61.6%	ICU Level of Service	B
Analysis Period (min)	15		

Movement	EBL	EBT	EBR	WBL	WBT	WBR	NBL	NBT	NBR	SBL	SBT	SBR
Lane Configurations												
Volume (vph)	115	375	10	25	240	245	25	505	150	160	120	100
Ideal Flow (vphpl)	1900	1900	1900	1900	1900	1900	1900	1900	1900	1900	1900	1900
Total Lost time (s)	4.0	4.0		4.0	4.0	4.0	4.0	4.0		4.0	4.0	
Lane Util. Factor	1.00	1.00		1.00	1.00	1.00	1.00	1.00		1.00	1.00	
Frt	1.00	1.00		1.00	1.00	0.85	1.00	0.97		1.00	0.93	
Flt Protected	0.95	1.00		0.95	1.00	1.00	0.95	1.00		0.95	1.00	
Satd. Flow (prot)	1805	1893		1805	1900	1615	1805	1835		1805	1770	
Flt Permitted	0.95	1.00		0.95	1.00	1.00	0.95	1.00		0.95	1.00	
Satd. Flow (perm)	1805	1893		1805	1900	1615	1805	1835		1805	1770	
Peak-hour factor, PHF	1.00	1.00	1.00	1.00	1.00	1.00	1.00	1.00	1.00	1.00	1.00	1.00
Adj. Flow (vph)	115	375	10	25	240	245	25	505	150	160	120	100
RTOR Reduction (vph)	0	1	0	0	0	193	0	11	0	0	28	0
Lane Group Flow (vph)	115	384	0	25	240	52	25	644	0	160	192	0
Heavy Vehicles (%)	0%	0%	0%	0%	0%	0%	0%	0%	0%	0%	0%	0%
Turn Type	Prot			Prot		Perm	Prot			Prot		
Protected Phases	5	2		1	6		3	8		7	4	
Permitted Phases						6						
Actuated Green, G (s)	7.7	24.4		1.8	18.5	18.5	1.8	37.6		9.1	44.9	
Effective Green, g (s)	9.7	26.4		3.8	20.5	20.5	3.8	39.6		11.1	46.9	
Actuated g/C Ratio	0.10	0.27		0.04	0.21	0.21	0.04	0.41		0.11	0.48	
Clearance Time (s)	6.0	6.0		6.0	6.0	6.0	6.0	6.0		6.0	6.0	
Vehicle Extension (s)	2.4	2.7		2.7	2.7	2.7	2.6	2.5		2.6	2.5	
Lane Grp Cap (vph)	181	516		71	402	342	71	750		207	857	
v/s Ratio Prot	c0.06	c0.20		0.01	0.13		0.01	c0.35		c0.09	0.11	
v/s Ratio Perm						0.03						
v/c Ratio	0.64	0.74		0.35	0.60	0.15	0.35	0.86		0.77	0.22	
Uniform Delay, d1	41.9	32.2		45.4	34.5	31.1	45.4	26.1		41.7	14.5	
Progression Factor	1.00	1.00		1.00	1.00	1.00	1.00	1.00		1.00	1.00	
Incremental Delay, d2	6.0	5.6		2.5	2.2	0.2	2.4	9.5		15.8	0.1	
Delay (s)	48.0	37.8		47.9	36.6	31.3	47.7	35.7		57.5	14.6	
Level of Service	D	D		D	D	C	D	D		E	B	
Approach Delay (s)		40.1			34.6			36.1			32.6	
Approach LOS		D			C			D			C	

Intersection Summary			
HCM Average Control Delay	36.1	HCM Level of Service	D
HCM Volume to Capacity ratio	0.78		
Actuated Cycle Length (s)	96.9	Sum of lost time (s)	12.0
Intersection Capacity Utilization	82.4%	ICU Level of Service	E
Analysis Period (min)	15		

c Critical Lane Group

Movement	EBL	EBT	EBR	WBL	WBT	WBR	NBL	NBT	NBR	SBL	SBT	SBR
Lane Configurations												
Volume (vph)	205	640	5	5	490	250	5	5	5	250	5	95
Ideal Flow (vphpl)	1900	1900	1900	1900	1900	1900	1900	1900	1900	1900	1900	1900
Total Lost time (s)	4.0	4.0		4.0	4.0	4.0		4.0			4.0	4.0
Lane Util. Factor	1.00	1.00		1.00	1.00	1.00		1.00			1.00	1.00
Frt	1.00	1.00		1.00	1.00	0.85		0.95			1.00	0.85
Flt Protected	0.95	1.00		0.95	1.00	1.00		0.98			0.95	1.00
Satd. Flow (prot)	1805	1898		1805	1900	1615		1785			1811	1615
Flt Permitted	0.95	1.00		0.95	1.00	1.00		1.00			0.95	1.00
Satd. Flow (perm)	1805	1898		1805	1900	1615		1814			1811	1615
Peak-hour factor, PHF	1.00	1.00	1.00	1.00	1.00	1.00	1.00	1.00	1.00	1.00	1.00	1.00
Adj. Flow (vph)	205	640	5	5	490	250	5	5	5	250	5	95
RTOR Reduction (vph)	0	0	0	0	0	126	0	5	0	0	0	75
Lane Group Flow (vph)	205	645	0	5	490	124	0	10	0	0	255	20
Heavy Vehicles (%)	0%	0%	0%	0%	0%	0%	0%	0%	0%	0%	0%	0%
Turn Type	Prot			Prot		Perm	Perm			Split		Perm
Protected Phases	5	2		1	6			8		4	4	
Permitted Phases						6	8					4
Actuated Green, G (s)	13.2	40.3		0.8	26.9	26.9		1.5			15.2	15.2
Effective Green, g (s)	15.2	42.3		1.8	28.9	28.9		2.5			17.2	17.2
Actuated g/C Ratio	0.19	0.53		0.02	0.36	0.36		0.03			0.22	0.22
Clearance Time (s)	6.0	6.0		5.0	6.0	6.0		5.0			6.0	6.0
Vehicle Extension (s)	2.4	2.7		2.4	2.7	2.7		2.5			2.5	2.5
Lane Grp Cap (vph)	344	1006		41	688	585		57			390	348
v/s Ratio Prot	c0.11	0.34		0.00	c0.26						c0.14	
v/s Ratio Perm						0.08		c0.01				0.01
v/c Ratio	0.60	0.64		0.12	0.71	0.21		0.18			0.65	0.06
Uniform Delay, d1	29.5	13.3		38.2	21.9	17.6		37.6			28.6	24.9
Progression Factor	1.00	1.00		1.00	1.00	1.00		1.00			1.00	1.00
Incremental Delay, d2	2.2	1.3		0.9	3.4	0.2		1.1			3.5	0.1
Delay (s)	31.7	14.6		39.1	25.2	17.7		38.7			32.1	24.9
Level of Service	C	B		D	C	B		D			C	C
Approach Delay (s)		18.8			22.8			38.7			30.1	
Approach LOS		B			C			D			C	

Intersection Summary			
HCM Average Control Delay	22.5	HCM Level of Service	C
HCM Volume to Capacity ratio	0.65		
Actuated Cycle Length (s)	79.8	Sum of lost time (s)	16.0
Intersection Capacity Utilization	68.1%	ICU Level of Service	C
Analysis Period (min)	15		

c Critical Lane Group

Movement	EBL	EBT	EBR	WBL	WBT	WBR	NBL	NBT	NBR	SBL	SBT	SBR
Lane Configurations												
Volume (vph)	270	775	120	45	450	95	180	680	130	130	210	125
Ideal Flow (vphpl)	1900	1900	1900	1900	1900	1900	1900	1900	1900	1900	1900	1900
Total Lost time (s)	4.0	4.0	5.0	4.0	4.0	5.0	4.0	4.0		4.0	4.0	4.0
Lane Util. Factor	1.00	1.00	1.00	1.00	1.00	1.00	1.00	1.00		1.00	1.00	1.00
Frt	1.00	1.00	0.85	1.00	1.00	0.85	1.00	0.98		1.00	1.00	0.85
Flt Protected	0.95	1.00	1.00	0.95	1.00	1.00	0.95	1.00		0.95	1.00	1.00
Satd. Flow (prot)	1805	1900	1615	1805	1900	1615	1805	1854		1805	1900	1615
Flt Permitted	0.95	1.00	1.00	0.95	1.00	1.00	0.95	1.00		0.95	1.00	1.00
Satd. Flow (perm)	1805	1900	1615	1805	1900	1615	1805	1854		1805	1900	1615
Peak-hour factor, PHF	1.00	1.00	1.00	1.00	1.00	1.00	1.00	1.00	1.00	1.00	1.00	1.00
Adj. Flow (vph)	270	775	120	45	450	95	180	680	130	130	210	125
RTOR Reduction (vph)	0	0	59	0	0	70	0	6	0	0	0	84
Lane Group Flow (vph)	270	775	61	45	450	25	180	804	0	130	210	41
Heavy Vehicles (%)	0%	0%	0%	0%	0%	0%	0%	0%	0%	0%	0%	0%
Turn Type	Prot		Perm	Prot		Perm	Prot			Prot		Perm
Protected Phases	5	2		1	6		3	8		7	4	
Permitted Phases			2			6						4
Actuated Green, G (s)	16.5	40.5	40.5	5.8	29.8	29.8	16.7	48.6		6.5	38.4	38.4
Effective Green, g (s)	17.0	41.0	40.0	6.3	30.3	29.3	17.2	49.1		7.0	38.9	38.9
Actuated g/C Ratio	0.14	0.34	0.34	0.05	0.25	0.25	0.14	0.41		0.06	0.33	0.33
Clearance Time (s)	4.5	4.5	4.5	4.5	4.5	4.5	4.5	4.5		4.5	4.5	4.5
Vehicle Extension (s)	3.0	1.0	1.0	3.0	1.0	1.0	3.0	1.0		3.0	1.0	1.0
Lane Grp Cap (vph)	257	652	541	95	482	396	260	762		106	619	526
v/s Ratio Prot	c0.15	c0.41		0.02	0.24		0.10	c0.43		c0.07	0.11	
v/s Ratio Perm			0.04			0.02						0.03
v/c Ratio	1.05	1.19	0.11	0.47	0.93	0.06	0.69	1.06		1.23	0.34	0.08
Uniform Delay, d1	51.2	39.2	27.4	54.9	43.6	34.5	48.6	35.2		56.2	30.5	27.8
Progression Factor	1.00	1.00	1.00	1.00	1.00	1.00	1.00	1.00		1.00	1.00	1.00
Incremental Delay, d2	70.0	99.7	0.0	3.7	25.0	0.0	7.7	48.2		160.3	0.1	0.0
Delay (s)	121.2	138.9	27.5	58.6	68.6	34.6	56.3	83.3		216.5	30.6	27.9
Level of Service	F	F	C	E	E	C	E	F		F	C	C
Approach Delay (s)		123.3			62.3			78.4			81.9	
Approach LOS		F			E			E			F	

Intersection Summary			
HCM Average Control Delay	92.3	HCM Level of Service	F
HCM Volume to Capacity ratio	1.13		
Actuated Cycle Length (s)	119.4	Sum of lost time (s)	16.0
Intersection Capacity Utilization	108.3%	ICU Level of Service	G
Analysis Period (min)	15		

c Critical Lane Group

Movement	EBL	EBR	NBL	NBT	SBT	SBR
Lane Configurations						
Volume (veh/h)	130	20	25	265	375	130
Sign Control	Stop			Free	Free	
Grade	0%			0%	0%	
Peak Hour Factor	1.00	1.00	1.00	1.00	1.00	1.00
Hourly flow rate (vph)	130	20	25	265	375	130
Pedestrians						
Lane Width (ft)						
Walking Speed (ft/s)						
Percent Blockage						
Right turn flare (veh)						
Median type				None	None	
Median storage veh)						
Upstream signal (ft)						
pX, platoon unblocked						
vC, conflicting volume	755	440	505			
vC1, stage 1 conf vol						
vC2, stage 2 conf vol						
vCu, unblocked vol	755	440	505			
tC, single (s)	6.4	6.2	4.1			
tC, 2 stage (s)						
tF (s)	3.5	3.3	2.2			
p0 queue free %	65	97	98			
cM capacity (veh/h)	368	617	1060			

Direction, Lane #	EB 1	EB 2	NB 1	NB 2	SB 1
Volume Total	130	20	25	265	505
Volume Left	130	0	25	0	0
Volume Right	0	20	0	0	130
cSH	368	617	1060	1700	1700
Volume to Capacity	0.35	0.03	0.02	0.16	0.30
Queue Length 95th (ft)	39	3	2	0	0
Control Delay (s)	20.1	11.0	8.5	0.0	0.0
Lane LOS	C	B	A		
Approach Delay (s)	18.9		0.7		0.0
Approach LOS	C				

Intersection Summary			
Average Delay	3.2		
Intersection Capacity Utilization	42.3%	ICU Level of Service	A
Analysis Period (min)	15		

Movement	EBL	EBT	EBR	WBL	WBT	WBR	NBL	NBT	NBR	SBL	SBT	SBR
Lane Configurations												
Volume (vph)	15	1200	465	40	1055	85	240	135	25	55	125	25
Ideal Flow (vphpl)	1900	1900	1900	1900	1900	1900	1900	1900	1900	1900	1900	1900
Total Lost time (s)	4.0	4.0		4.0	4.0		3.0	4.0		3.0	4.0	
Lane Util. Factor	1.00	0.95		1.00	0.95		0.97	1.00		1.00	1.00	
Frt	1.00	0.96		1.00	0.99		1.00	0.98		1.00	0.97	
Flt Protected	0.95	1.00		0.95	1.00		0.95	1.00		0.95	1.00	
Satd. Flow (prot)	1805	3248		1805	3570		3502	1855		1805	1852	
Flt Permitted	0.16	1.00		0.07	1.00		0.95	1.00		0.95	1.00	
Satd. Flow (perm)	307	3248		136	3570		3502	1855		1805	1852	
Peak-hour factor, PHF	1.00	1.00	1.00	1.00	1.00	1.00	1.00	1.00	1.00	1.00	1.00	1.00
Adj. Flow (vph)	15	1200	465	40	1055	85	240	135	25	55	125	25
RTOR Reduction (vph)	0	33	0	0	5	0	0	7	0	0	8	0
Lane Group Flow (vph)	15	1632	0	40	1135	0	240	153	0	55	142	0
Heavy Vehicles (%)	0%	9%	0%	0%	0%	0%	0%	0%	0%	0%	0%	0%
Turn Type	pm+pt			pm+pt			Prot			Prot		
Protected Phases	5	2		1	6		3	8		7	4	
Permitted Phases	2			6								
Actuated Green, G (s)	58.4	58.4		60.2	59.7		6.0	16.9		4.0	14.9	
Effective Green, g (s)	58.4	58.9		60.2	60.2		7.0	17.9		5.0	15.9	
Actuated g/C Ratio	0.58	0.59		0.60	0.60		0.07	0.18		0.05	0.16	
Clearance Time (s)	4.0	4.5		4.0	4.5		4.0	5.0		4.0	5.0	
Vehicle Extension (s)	2.3	4.3		2.3	4.3		2.5	2.5		2.5	2.5	
Lane Grp Cap (vph)	208	1913		135	2149		245	332		90	294	
v/s Ratio Prot	0.00	c0.50		0.01	c0.32		c0.07	c0.08		0.03	0.08	
v/s Ratio Perm	0.04			0.17								
v/c Ratio	0.07	0.85		0.30	0.53		0.98	0.46		0.61	0.48	
Uniform Delay, d1	10.8	17.0		27.7	11.6		46.4	36.7		46.5	38.3	
Progression Factor	1.00	1.00		0.49	0.44		1.00	1.00		1.00	1.00	
Incremental Delay, d2	0.1	5.1		0.6	0.8		51.1	0.7		10.0	0.9	
Delay (s)	10.9	22.0		14.1	5.9		97.6	37.5		56.6	39.2	
Level of Service	B	C		B	A		F	D		E	D	
Approach Delay (s)		21.9			6.2			73.5			43.9	
Approach LOS		C			A			E			D	

Intersection Summary			
HCM Average Control Delay	23.8	HCM Level of Service	C
HCM Volume to Capacity ratio	0.72		
Actuated Cycle Length (s)	100.0	Sum of lost time (s)	7.0
Intersection Capacity Utilization	73.2%	ICU Level of Service	D
Analysis Period (min)	15		

c Critical Lane Group

Movement	EBL	EBT	EBR	WBL	WBT	WBR	NBL	NBT	NBR	SBL	SBT	SBR
Lane Configurations												
Volume (vph)	145	560	150	50	310	200	60	290	35	275	315	85
Ideal Flow (vphpl)	1900	1900	1900	1900	1900	1900	1900	1900	1900	1900	1900	1900
Total Lost time (s)	4.0	4.0		4.0	4.0		4.0	4.0	5.7	4.0	4.0	
Lane Util. Factor	1.00	1.00		1.00	1.00		1.00	1.00	1.00	1.00	1.00	
Frt	1.00	0.97		1.00	0.94		1.00	1.00	0.85	1.00	0.97	
Flt Protected	0.95	1.00		0.95	1.00		0.95	1.00	1.00	0.95	1.00	
Satd. Flow (prot)	1805	1832		1805	1788		1805	1900	1615	1805	1825	
Flt Permitted	0.95	1.00		0.95	1.00		0.95	1.00	1.00	0.95	1.00	
Satd. Flow (perm)	1805	1832		1805	1788		1805	1900	1615	1805	1825	
Peak-hour factor, PHF	1.00	1.00	1.00	1.00	1.00	1.00	1.00	1.00	1.00	1.00	1.00	1.00
Adj. Flow (vph)	145	560	150	50	310	200	60	290	35	275	315	85
RTOR Reduction (vph)	0	11	0	0	27	0	0	0	29	0	10	0
Lane Group Flow (vph)	145	699	0	50	483	0	60	290	6	275	390	0
Heavy Vehicles (%)	0%	0%	2%	0%	0%	0%	0%	0%	0%	0%	1%	0%
Turn Type	Prot			Prot			Prot		Perm	Prot		
Protected Phases	5	2		1	6		7	4		3	8	
Permitted Phases									4			
Actuated Green, G (s)	9.0	34.2		2.8	27.8		3.8	15.4	15.4	14.2	26.0	
Effective Green, g (s)	10.5	35.2		4.3	29.0		3.8	16.6	14.9	14.2	27.0	
Actuated g/C Ratio	0.12	0.41		0.05	0.34		0.04	0.19	0.17	0.16	0.31	
Clearance Time (s)	5.5	5.0		5.5	5.2		4.0	5.2	5.2	4.0	5.0	
Vehicle Extension (s)	3.1	2.5		3.1	2.5		2.5	2.5	2.5	2.5	2.5	
Lane Grp Cap (vph)	220	747		90	601		79	365	279	297	571	
v/s Ratio Prot	c0.08	c0.38		0.03	0.27		0.03	c0.15		c0.15	0.21	
v/s Ratio Perm									0.00			
v/c Ratio	0.66	0.94		0.56	0.80		0.76	0.79	0.02	0.93	0.68	
Uniform Delay, d1	36.2	24.5		40.1	26.1		40.8	33.2	29.6	35.5	25.9	
Progression Factor	1.00	1.00		1.00	1.00		1.00	1.00	1.00	1.00	1.00	
Incremental Delay, d2	7.0	18.9		7.4	7.4		32.2	11.0	0.0	33.1	3.1	
Delay (s)	43.2	43.4		47.4	33.5		73.0	44.2	29.7	68.7	29.0	
Level of Service	D	D		D	C		E	D	C	E	C	
Approach Delay (s)		43.4			34.7			47.4			45.1	
Approach LOS		D			C			D			D	

Intersection Summary			
HCM Average Control Delay	42.5	HCM Level of Service	D
HCM Volume to Capacity ratio	0.90		
Actuated Cycle Length (s)	86.3	Sum of lost time (s)	16.0
Intersection Capacity Utilization	86.6%	ICU Level of Service	E
Analysis Period (min)	15		

c Critical Lane Group

Movement	EBL	EBT	EBR	WBL	WBT	WBR	NBL	NBT	NBR	SBL	SBT	SBR
Lane Configurations												
Volume (vph)	120	1220	135	150	920	90	155	265	160	165	360	155
Ideal Flow (vphpl)	1900	1900	1900	1900	1900	1900	1900	1900	1900	1900	1900	1900
Total Lost time (s)	4.0	4.0		4.0	4.0	4.0		4.0	4.0	4.0	4.0	5.0
Lane Util. Factor	1.00	0.95		1.00	0.95	1.00		0.95	1.00	1.00	1.00	1.00
Frt	1.00	0.99		1.00	1.00	0.85		1.00	0.85	1.00	1.00	0.85
Flt Protected	0.95	1.00		0.95	1.00	1.00		0.98	1.00	0.95	1.00	1.00
Satd. Flow (prot)	1805	3556		1805	3610	1615		3545	1615	1805	1900	1615
Flt Permitted	0.95	1.00		0.95	1.00	1.00		0.98	1.00	0.95	1.00	1.00
Satd. Flow (perm)	1805	3556		1805	3610	1615		3545	1615	1805	1900	1615
Peak-hour factor, PHF	1.00	1.00	1.00	1.00	1.00	1.00	1.00	1.00	1.00	1.00	1.00	1.00
Adj. Flow (vph)	120	1220	135	150	920	90	155	265	160	165	360	155
RTOR Reduction (vph)	0	8	0	0	0	56	0	0	135	0	0	103
Lane Group Flow (vph)	120	1347	0	150	920	34	0	420	25	165	360	52
Heavy Vehicles (%)	0%	0%	0%	0%	0%	0%	0%	0%	0%	0%	0%	0%
Turn Type	Prot			Prot		Perm	Split		Perm	Split		custom
Protected Phases	5	2		1	6		4	4		3	3	
Permitted Phases						6			4			3 5
Actuated Green, G (s)	7.7	39.5		6.0	37.8	37.8		15.9	15.9	21.1	21.1	33.8
Effective Green, g (s)	7.7	40.0		6.0	38.3	38.3		15.9	15.9	22.1	22.1	33.8
Actuated g/C Ratio	0.08	0.40		0.06	0.38	0.38		0.16	0.16	0.22	0.22	0.34
Clearance Time (s)	4.0	4.5		4.0	4.5	4.5		4.0	4.0	5.0	5.0	
Vehicle Extension (s)	2.3	4.3		2.3	4.3	4.3		2.3	2.3	2.3	2.3	
Lane Grp Cap (vph)	139	1422		108	1383	619		564	257	399	420	546
v/s Ratio Prot	0.07	c0.38		c0.08	0.25			c0.12		0.09	c0.19	
v/s Ratio Perm						0.02			0.02			0.03
v/c Ratio	0.86	0.95		1.39	0.67	0.06		0.74	0.10	0.41	0.86	0.10
Uniform Delay, d1	45.6	29.0		47.0	25.5	19.4		40.1	35.9	33.4	37.4	22.6
Progression Factor	0.88	0.99		1.00	1.00	1.00		1.00	1.00	1.00	1.00	1.00
Incremental Delay, d2	30.0	11.1		221.9	2.5	0.2		4.9	0.1	0.4	15.4	0.0
Delay (s)	70.2	39.7		268.9	28.1	19.6		45.0	36.0	33.8	52.8	22.7
Level of Service	E	D		F	C	B		D	D	C	D	C
Approach Delay (s)		42.2			58.6			42.5			41.3	
Approach LOS		D			E			D			D	

Intersection Summary			
HCM Average Control Delay	47.0	HCM Level of Service	D
HCM Volume to Capacity ratio	0.87		
Actuated Cycle Length (s)	100.0	Sum of lost time (s)	12.0
Intersection Capacity Utilization	90.4%	ICU Level of Service	E
Analysis Period (min)	15		

c Critical Lane Group

Movement	EBL	EBR	NBL	NBT	SBT	SBR
Lane Configurations						
Volume (veh/h)	130	200	150	235	475	235
Sign Control	Stop			Free	Free	
Grade	0%			0%	0%	
Peak Hour Factor	1.00	1.00	1.00	1.00	1.00	1.00
Hourly flow rate (vph)	130	200	150	235	475	235
Pedestrians						
Lane Width (ft)						
Walking Speed (ft/s)						
Percent Blockage						
Right turn flare (veh)						
Median type				None	None	
Median storage veh)						
Upstream signal (ft)					961	
pX, platoon unblocked						
vC, conflicting volume	1010	475	710			
vC1, stage 1 conf vol						
vC2, stage 2 conf vol						
vCu, unblocked vol	1010	475	710			
tC, single (s)	6.4	6.2	4.1			
tC, 2 stage (s)						
tF (s)	3.5	3.3	2.2			
p0 queue free %	41	66	83			
cM capacity (veh/h)	221	590	889			

Direction, Lane #	EB 1	NB 1	NB 2	SB 1	SB 2
Volume Total	330	150	235	475	235
Volume Left	130	150	0	0	0
Volume Right	200	0	0	0	235
cSH	356	889	1700	1700	1700
Volume to Capacity	0.93	0.17	0.14	0.28	0.14
Queue Length 95th (ft)	241	15	0	0	0
Control Delay (s)	65.8	9.9	0.0	0.0	0.0
Lane LOS	F	A			
Approach Delay (s)	65.8	3.8		0.0	
Approach LOS	F				

Intersection Summary			
Average Delay	16.3		
Intersection Capacity Utilization	64.0%	ICU Level of Service	C
Analysis Period (min)	15		

Movement	EBL	EBT	EBR	WBL	WBT	WBR	NBL	NBT	NBR	SBL	SBT	SBR
Lane Configurations												
Volume (vph)	150	1245	45	300	1185	175	55	200	180	225	425	115
Ideal Flow (vphpl)	1900	1900	1900	1900	1900	1900	1900	1900	1900	1900	1900	1900
Total Lost time (s)	4.0	4.0	4.0	4.0	4.0	4.0	4.0	4.0	4.5	4.0	4.0	
Lane Util. Factor	1.00	0.95	1.00	1.00	0.95	1.00	1.00	0.95	1.00	1.00	0.95	
Frt	1.00	1.00	0.85	1.00	1.00	0.85	1.00	1.00	0.85	1.00	0.97	
Flt Protected	0.95	1.00	1.00	0.95	1.00	1.00	0.95	1.00	1.00	0.95	1.00	
Satd. Flow (prot)	1805	3610	1615	1805	3610	1615	1805	3610	1615	1805	3495	
Flt Permitted	0.95	1.00	1.00	0.95	1.00	1.00	0.95	1.00	1.00	0.95	1.00	
Satd. Flow (perm)	1805	3610	1615	1805	3610	1615	1805	3610	1615	1805	3495	
Peak-hour factor, PHF	1.00	1.00	1.00	1.00	1.00	1.00	1.00	1.00	1.00	1.00	1.00	1.00
Adj. Flow (vph)	150	1245	45	300	1185	175	55	200	180	225	425	115
RTOR Reduction (vph)	0	0	23	0	0	88	0	0	42	0	20	0
Lane Group Flow (vph)	150	1245	22	300	1185	87	55	200	138	225	520	0
Heavy Vehicles (%)	0%	0%	0%	0%	0%	0%	0%	0%	0%	0%	0%	0%
Turn Type	Prot		Perm	Prot		Perm	Prot		pt+ov	Prot		
Protected Phases	5	2		1	6		3	8	8 1	7	4	
Permitted Phases			2			6						
Actuated Green, G (s)	13.2	51.8	51.8	19.4	58.0	58.0	7.3	11.7	31.1	19.2	23.6	
Effective Green, g (s)	13.2	53.2	53.2	19.4	59.4	59.4	7.3	12.2	31.1	19.2	24.1	
Actuated g/C Ratio	0.11	0.44	0.44	0.16	0.49	0.49	0.06	0.10	0.26	0.16	0.20	
Clearance Time (s)	4.0	5.4	5.4	4.0	5.4	5.4	4.0	4.5		4.0	4.5	
Vehicle Extension (s)	2.3	4.4	4.4	2.3	4.4	4.4	2.3	2.3		2.3	2.3	
Lane Grp Cap (vph)	199	1600	716	292	1787	799	110	367	419	289	702	
v/s Ratio Prot	0.08	c0.34		c0.17	0.33		0.03	c0.06	0.09	0.12	c0.15	
v/s Ratio Perm			0.01			0.05						
v/c Ratio	0.75	0.78	0.03	1.03	0.66	0.11	0.50	0.54	0.33	0.78	0.74	
Uniform Delay, d1	51.8	28.4	18.9	50.3	22.8	16.2	54.6	51.3	36.0	48.4	45.0	
Progression Factor	1.00	1.00	1.00	1.15	0.71	0.88	1.00	1.00	1.00	1.00	1.00	
Incremental Delay, d2	13.9	3.8	0.1	57.7	1.8	0.3	2.1	1.1	0.3	11.7	3.9	
Delay (s)	65.7	32.2	18.9	115.5	18.0	14.5	56.7	52.4	36.3	60.1	48.9	
Level of Service	E	C	B	F	B	B	E	D	D	E	D	
Approach Delay (s)		35.3			35.2			46.3			52.2	
Approach LOS		D			D			D			D	

Intersection Summary			
HCM Average Control Delay	39.4	HCM Level of Service	D
HCM Volume to Capacity ratio	0.78		
Actuated Cycle Length (s)	120.0	Sum of lost time (s)	12.0
Intersection Capacity Utilization	83.1%	ICU Level of Service	E
Analysis Period (min)	15		

c Critical Lane Group

Movement	EBL	EBT	EBR	WBL	WBT	WBR	NBL	NBT	NBR	SBL	SBT	SBR
Lane Configurations												
Volume (veh/h)	225	5	15	5	5	5	15	205	5	5	450	315
Sign Control		Stop			Stop			Free			Free	
Grade		0%			0%			0%			0%	
Peak Hour Factor	1.00	1.00	1.00	1.00	1.00	1.00	1.00	1.00	1.00	1.00	1.00	1.00
Hourly flow rate (vph)	225	5	15	5	5	5	15	205	5	5	450	315
Pedestrians					1500							
Lane Width (ft)					12.0							
Walking Speed (ft/s)					4.0							
Percent Blockage					80							
Right turn flare (veh)												
Median type								None			None	
Median storage veh)												
Upstream signal (ft)											280	
pX, platoon unblocked	0.86	0.86	0.86	0.86	0.86		0.86					
vC, conflicting volume	702	2200	450	2215	2512	1708	765			1710		
vC1, stage 1 conf vol												
vC2, stage 2 conf vol												
vCu, unblocked vol	573	2314	279	2331	2677	1708	645			1710		
tC, single (s)	7.1	6.5	6.2	7.1	6.5	6.2	4.1			4.1		
tC, 2 stage (s)												
tF (s)	3.5	4.0	3.3	3.5	4.0	3.3	2.2			2.2		
p0 queue free %	0	17	98	0	0	78	98			93		
cM capacity (veh/h)	0	6	657	1	4	23	817			75		

Direction, Lane #	EB 1	EB 2	WB 1	NB 1	NB 2	SB 1	SB 2	SB 3
Volume Total	225	20	15	15	210	5	450	315
Volume Left	225	0	5	15	0	5	0	0
Volume Right	0	15	5	0	5	0	0	315
cSH	0	24	1	817	1700	75	1700	1700
Volume to Capacity	Err	0.85	11.30	0.02	0.12	0.07	0.26	0.19
Queue Length 95th (ft)	Err	63	Err	1	0	5	0	0
Control Delay (s)	Err	367.5	Err	9.5	0.0	56.2	0.0	0.0
Lane LOS	F	F	F	A		F		
Approach Delay (s)	Err		Err	0.6		0.4		
Approach LOS	F		F					

Intersection Summary			
Average Delay	Err		
Intersection Capacity Utilization	49.5%	ICU Level of Service	A
Analysis Period (min)	15		

Movement	EBL	EBT	EBR	WBL	WBT	WBR	NBL	NBT	NBR	SBL	SBT	SBR
Lane Configurations												
Volume (vph)	125	1395	110	140	1345	95	70	115	140	95	165	160
Ideal Flow (vphpl)	1900	1900	1900	1900	1900	1900	1900	1900	1900	1900	1900	1900
Total Lost time (s)	4.0	4.0	4.0	4.0	4.0		4.0	4.0		4.0	4.0	
Lane Util. Factor	1.00	0.95	1.00	1.00	0.95		1.00	1.00		1.00	1.00	
Frt	1.00	1.00	0.85	1.00	0.99		1.00	0.92		1.00	0.93	
Flt Protected	0.95	1.00	1.00	0.95	1.00		0.95	1.00		0.95	1.00	
Satd. Flow (prot)	1770	3505	1599	1641	3475		1770	1690		1770	1700	
Flt Permitted	0.95	1.00	1.00	0.95	1.00		0.95	1.00		0.95	1.00	
Satd. Flow (perm)	1770	3505	1599	1641	3475		1770	1690		1770	1700	
Peak-hour factor, PHF	1.00	1.00	1.00	1.00	1.00	1.00	1.00	1.00	1.00	1.00	1.00	1.00
Adj. Flow (vph)	125	1395	110	140	1345	95	70	115	140	95	165	160
RTOR Reduction (vph)	0	0	30	0	4	0	0	37	0	0	29	0
Lane Group Flow (vph)	125	1395	80	140	1436	0	70	218	0	95	296	0
Heavy Vehicles (%)	2%	3%	1%	10%	3%	1%	2%	1%	5%	2%	5%	2%
Turn Type	Prot		Perm	Prot			Prot			Prot		
Protected Phases	5	2		1	6		3	8		7	4	
Permitted Phases			2									
Actuated Green, G (s)	12.0	58.4	58.4	12.0	58.4		7.5	21.9		9.8	24.2	
Effective Green, g (s)	12.0	59.8	59.8	12.0	59.8		7.5	22.4		9.8	24.7	
Actuated g/C Ratio	0.10	0.50	0.50	0.10	0.50		0.06	0.19		0.08	0.21	
Clearance Time (s)	4.0	5.4	5.4	4.0	5.4		4.0	4.5		4.0	4.5	
Vehicle Extension (s)	2.3	4.5	4.5	2.3	4.5		2.5	2.5		2.5	2.5	
Lane Grp Cap (vph)	177	1747	797	164	1732		111	315		145	350	
v/s Ratio Prot	0.07	c0.40		0.09	c0.41		0.04	0.13		c0.05	c0.17	
v/s Ratio Perm			0.05									
v/c Ratio	0.71	0.80	0.10	0.85	0.83		0.63	0.69		0.66	0.84	
Uniform Delay, d1	52.3	25.1	15.9	53.1	25.7		54.9	45.6		53.5	45.8	
Progression Factor	1.04	1.11	1.13	1.27	0.80		1.00	1.00		1.00	1.00	
Incremental Delay, d2	9.6	3.5	0.2	27.6	3.9		9.8	5.9		9.1	16.5	
Delay (s)	64.0	31.2	18.2	95.2	24.5		64.7	51.5		62.6	62.4	
Level of Service	E	C	B	F	C		E	D		E	E	
Approach Delay (s)		32.9			30.8			54.3			62.4	
Approach LOS		C			C			D			E	

Intersection Summary			
HCM Average Control Delay	36.9	HCM Level of Service	D
HCM Volume to Capacity ratio	0.79		
Actuated Cycle Length (s)	120.0	Sum of lost time (s)	8.0
Intersection Capacity Utilization	82.8%	ICU Level of Service	E
Analysis Period (min)	15		

c Critical Lane Group

Movement	EBL	EBR	NBL	NBT	SBT	SBR
Lane Configurations						
Volume (veh/h)	195	160	85	865	1185	275
Sign Control	Stop			Free	Free	
Grade	0%			0%	0%	
Peak Hour Factor	1.00	1.00	1.00	1.00	1.00	1.00
Hourly flow rate (vph)	195	160	85	865	1185	275
Pedestrians						
Lane Width (ft)						
Walking Speed (ft/s)						
Percent Blockage						
Right turn flare (veh)						
Median type				None	TWLTL	
Median storage veh)					2	
Upstream signal (ft)					618	
pX, platoon unblocked	0.84	0.84	0.84			
vC, conflicting volume	1925	730	1460			
vC1, stage 1 conf vol	1322					
vC2, stage 2 conf vol	602					
vCu, unblocked vol	1725	307	1173			
tC, single (s)	6.8	6.9	4.1			
tC, 2 stage (s)	5.8					
tF (s)	3.5	3.3	2.2			
p0 queue free %	12	72	83			
cM capacity (veh/h)	223	581	498			

Direction, Lane #	EB 1	NB 1	NB 2	NB 3	SB 1	SB 2
Volume Total	355	85	432	432	790	670
Volume Left	195	85	0	0	0	0
Volume Right	160	0	0	0	0	275
cSH	309	498	1700	1700	1700	1700
Volume to Capacity	1.15	0.17	0.25	0.25	0.46	0.39
Queue Length 95th (ft)	370	15	0	0	0	0
Control Delay (s)	135.3	13.7	0.0	0.0	0.0	0.0
Lane LOS	F	B				
Approach Delay (s)	135.3	1.2			0.0	
Approach LOS	F					

Intersection Summary			
Average Delay	17.8		
Intersection Capacity Utilization	78.1%	ICU Level of Service	D
Analysis Period (min)	15		

Movement	EBL	EBT	EBR	WBL	WBT	WBR	NBL	NBT	NBR	SBL	SBT	SBR
Lane Configurations												
Volume (vph)	45	1490	50	30	1450	85	70	40	60	75	90	35
Ideal Flow (vphpl)	1900	1900	1900	1900	1900	1900	1900	1900	1900	1900	1900	1900
Total Lost time (s)	4.0	4.0		4.0	4.0	4.0		4.0			4.0	4.0
Lane Util. Factor	1.00	0.95		1.00	0.95	1.00		1.00			1.00	1.00
Frt	1.00	1.00		1.00	1.00	0.85		0.95			1.00	0.85
Flt Protected	0.95	1.00		0.95	1.00	1.00		0.98			0.98	1.00
Satd. Flow (prot)	1805	3592		1805	3610	1615		1773			1858	1615
Flt Permitted	0.95	1.00		0.95	1.00	1.00		0.47			0.66	1.00
Satd. Flow (perm)	1805	3592		1805	3610	1615		851			1258	1615
Peak-hour factor, PHF	1.00	1.00	1.00	1.00	1.00	1.00	1.00	1.00	1.00	1.00	1.00	1.00
Adj. Flow (vph)	45	1490	50	30	1450	85	70	40	60	75	90	35
RTOR Reduction (vph)	0	2	0	0	0	7	0	16	0	0	0	30
Lane Group Flow (vph)	45	1538	0	30	1450	78	0	154	0	0	165	5
Heavy Vehicles (%)	0%	0%	0%	0%	0%	0%	0%	0%	0%	0%	0%	0%
Turn Type	Prot			Prot		Perm	Perm			Perm		Perm
Protected Phases	5	2		1	6			8			4	
Permitted Phases						6	8			4		4
Actuated Green, G (s)	6.8	84.0		6.6	83.8	83.8		16.0			14.8	14.8
Effective Green, g (s)	6.8	85.4		6.6	85.2	85.2		16.0			16.0	16.0
Actuated g/C Ratio	0.06	0.71		0.05	0.71	0.71		0.13			0.13	0.13
Clearance Time (s)	4.0	5.4		4.0	5.4	5.4		4.0			5.2	5.2
Vehicle Extension (s)	2.3	4.5		2.3	4.5	4.5		2.5			2.5	2.5
Lane Grp Cap (vph)	102	2556		99	2563	1147		113			168	215
v/s Ratio Prot	0.02	c0.43		0.02	c0.40							
v/s Ratio Perm						0.05		c0.18			0.13	0.00
v/c Ratio	0.44	0.60		0.30	0.57	0.07		1.36			0.98	0.02
Uniform Delay, d1	54.8	8.7		54.5	8.4	5.3		52.0			51.9	45.2
Progression Factor	0.97	0.79		1.18	1.65	0.86		1.00			1.00	1.00
Incremental Delay, d2	1.1	0.7		0.6	0.6	0.1		208.2			63.8	0.0
Delay (s)	54.0	7.6		65.1	14.5	4.6		260.2			115.7	45.2
Level of Service	D	A		E	B	A		F			F	D
Approach Delay (s)		8.9			14.9			260.2			103.3	
Approach LOS		A			B			F			F	

Intersection Summary			
HCM Average Control Delay	29.1	HCM Level of Service	C
HCM Volume to Capacity ratio	0.70		
Actuated Cycle Length (s)	120.0	Sum of lost time (s)	8.0
Intersection Capacity Utilization	65.8%	ICU Level of Service	C
Analysis Period (min)	15		

c Critical Lane Group

Movement	WBL	WBR	NBT	NBR	SBL	SBT
Lane Configurations						
Volume (veh/h)	50	170	305	90	270	455
Sign Control	Stop		Free			Free
Grade	0%		0%			0%
Peak Hour Factor	1.00	1.00	1.00	1.00	1.00	1.00
Hourly flow rate (vph)	50	170	305	90	270	455
Pedestrians						
Lane Width (ft)						
Walking Speed (ft/s)						
Percent Blockage						
Right turn flare (veh)						
Median type			None			None
Median storage veh)						
Upstream signal (ft)						
pX, platoon unblocked						
vC, conflicting volume	1345	350			395	
vC1, stage 1 conf vol						
vC2, stage 2 conf vol						
vCu, unblocked vol	1345	350			395	
tC, single (s)	6.4	6.2			4.1	
tC, 2 stage (s)						
tF (s)	3.5	3.3			2.2	
p0 queue free %	62	76			77	
cM capacity (veh/h)	130	698			1175	

Direction, Lane #	WB 1	WB 2	NB 1	SB 1	SB 2
Volume Total	50	170	395	270	455
Volume Left	50	0	0	270	0
Volume Right	0	170	90	0	0
cSH	130	698	1700	1175	1700
Volume to Capacity	0.38	0.24	0.23	0.23	0.27
Queue Length 95th (ft)	40	24	0	22	0
Control Delay (s)	49.1	11.8	0.0	9.0	0.0
Lane LOS	E	B		A	
Approach Delay (s)	20.3		0.0	3.3	
Approach LOS	C				

Intersection Summary			
Average Delay	5.1		
Intersection Capacity Utilization	51.1%	ICU Level of Service	A
Analysis Period (min)	15		

Movement	EBL	EBT	EBR	WBL	WBT	WBR	NBL	NBT	NBR	SBL	SBT	SBR
Lane Configurations												
Volume (vph)	115	280	160	105	255	165	80	590	45	280	950	60
Ideal Flow (vphpl)	1900	1900	1900	1900	1900	1900	1900	1900	1900	1900	1900	1900
Total Lost time (s)	4.0	4.0		4.0	4.0		4.0	4.0		4.0	4.0	
Lane Util. Factor	1.00	1.00		1.00	1.00		1.00	0.95		1.00	0.95	
Frt	1.00	0.95		1.00	0.94		1.00	0.99		1.00	0.99	
Flt Protected	0.95	1.00		0.95	1.00		0.95	1.00		0.95	1.00	
Satd. Flow (prot)	1805	1796		1805	1788		1805	3572		1805	3578	
Flt Permitted	0.95	1.00		0.95	1.00		0.13	1.00		0.23	1.00	
Satd. Flow (perm)	1805	1796		1805	1788		239	3572		438	3578	
Peak-hour factor, PHF	1.00	1.00	1.00	1.00	1.00	1.00	1.00	1.00	1.00	1.00	1.00	1.00
Adj. Flow (vph)	115	280	160	105	255	165	80	590	45	280	950	60
RTOR Reduction (vph)	0	16	0	0	19	0	0	4	0	0	3	0
Lane Group Flow (vph)	115	424	0	105	401	0	80	631	0	280	1007	0
Heavy Vehicles (%)	0%	0%	0%	0%	0%	0%	0%	0%	0%	0%	0%	0%
Turn Type	Prot			Prot			pm+pt			pm+pt		
Protected Phases	3	8		7	4		1	6		5	2	
Permitted Phases							6			2		
Actuated Green, G (s)	9.0	35.5		8.4	34.9		38.0	33.2		48.5	38.7	
Effective Green, g (s)	10.0	36.9		9.4	36.3		40.0	34.7		49.5	40.2	
Actuated g/C Ratio	0.09	0.34		0.09	0.34		0.37	0.32		0.46	0.37	
Clearance Time (s)	5.0	5.4		5.0	5.4		5.0	5.5		5.0	5.5	
Vehicle Extension (s)	0.2	5.0		0.2	8.0		0.2	5.0		0.2	5.0	
Lane Grp Cap (vph)	167	612		157	599		172	1144		343	1328	
v/s Ratio Prot	c0.06	c0.24		0.06	0.22		0.02	0.18		c0.09	0.28	
v/s Ratio Perm							0.15			c0.29		
v/c Ratio	0.69	0.69		0.67	0.67		0.47	0.55		0.82	0.76	
Uniform Delay, d1	47.6	30.8		47.9	30.9		24.5	30.4		20.9	29.8	
Progression Factor	1.00	1.00		1.00	1.00		1.00	1.00		1.00	1.00	
Incremental Delay, d2	9.0	4.3		8.1	5.9		0.7	1.0		13.2	3.0	
Delay (s)	56.7	35.1		56.0	36.7		25.2	31.4		34.1	32.8	
Level of Service	E	D		E	D		C	C		C	C	
Approach Delay (s)		39.6			40.6			30.7			33.1	
Approach LOS		D			D			C			C	

Intersection Summary			
HCM Average Control Delay	35.0	HCM Level of Service	C
HCM Volume to Capacity ratio	0.72		
Actuated Cycle Length (s)	108.3	Sum of lost time (s)	8.0
Intersection Capacity Utilization	76.9%	ICU Level of Service	D
Analysis Period (min)	15		

c Critical Lane Group

Movement	EBL	EBT	WBT	WBR	SBL	SBR
Lane Configurations						
Volume (vph)	155	1395	1450	305	600	210
Ideal Flow (vphpl)	1900	1900	1900	1900	1900	1900
Total Lost time (s)	4.0	4.0	4.0		4.0	5.0
Lane Util. Factor	1.00	0.95	0.95		0.97	1.00
Frt	1.00	1.00	0.97		1.00	0.85
Flt Protected	0.95	1.00	1.00		0.95	1.00
Satd. Flow (prot)	1805	3610	3510		3502	1599
Flt Permitted	0.95	1.00	1.00		0.95	1.00
Satd. Flow (perm)	1805	3610	3510		3502	1599
Peak-hour factor, PHF	1.00	1.00	1.00	1.00	1.00	1.00
Adj. Flow (vph)	155	1395	1450	305	600	210
RTOR Reduction (vph)	0	0	13	0	0	18
Lane Group Flow (vph)	155	1395	1742	0	600	192
Heavy Vehicles (%)	0%	0%	0%	1%	0%	1%
Turn Type	Prot					custom
Protected Phases	5	2	6		7	4 5
Permitted Phases						
Actuated Green, G (s)	13.2	86.7	69.5		23.9	41.1
Effective Green, g (s)	13.2	88.1	70.9		23.9	41.1
Actuated g/C Ratio	0.11	0.73	0.59		0.20	0.34
Clearance Time (s)	4.0	5.4	5.4		4.0	
Vehicle Extension (s)	2.3	4.5	4.5		2.3	
Lane Grp Cap (vph)	199	2650	2074		697	548
v/s Ratio Prot	c0.09	0.39	c0.50		c0.17	0.12
v/s Ratio Perm						
v/c Ratio	0.78	0.53	0.84		0.86	0.35
Uniform Delay, d1	52.0	6.9	19.9		46.4	29.5
Progression Factor	1.04	0.71	0.52		0.98	0.96
Incremental Delay, d2	13.0	0.6	2.5		10.0	0.2
Delay (s)	66.9	5.5	12.9		55.5	28.6
Level of Service	E	A	B		E	C
Approach Delay (s)		11.6	12.9		48.5	
Approach LOS		B	B		D	

Intersection Summary			
HCM Average Control Delay	19.4	HCM Level of Service	B
HCM Volume to Capacity ratio	0.84		
Actuated Cycle Length (s)	120.0	Sum of lost time (s)	12.0
Intersection Capacity Utilization	85.5%	ICU Level of Service	E
Analysis Period (min)	15		

c Critical Lane Group

Movement	EBL	EBT	EBR	WBL	WBT	WBR	NBL	NBT	NBR	SBL	SBT	SBR
Lane Configurations												
Volume (vph)	75	65	150	120	65	40	85	220	165	145	585	45
Ideal Flow (vphpl)	1900	1900	1900	1900	1900	1900	1900	1900	1900	1900	1900	1900
Total Lost time (s)	4.0	4.0		4.0	4.0		4.0	4.0		4.0	4.0	
Lane Util. Factor	1.00	1.00		1.00	1.00		1.00	0.95		1.00	0.95	
Frt	1.00	0.90		1.00	0.94		1.00	0.94		1.00	0.99	
Flt Protected	0.95	1.00		0.95	1.00		0.95	1.00		0.95	1.00	
Satd. Flow (prot)	1770	1668		1770	1756		1770	3312		1770	3501	
Flt Permitted	1.00	1.00		1.00	1.00		0.33	1.00		0.52	1.00	
Satd. Flow (perm)	1863	1668		1863	1756		609	3312		976	3501	
Peak-hour factor, PHF	1.00	1.00	1.00	1.00	1.00	1.00	1.00	1.00	1.00	1.00	1.00	1.00
Adj. Flow (vph)	75	65	150	120	65	40	85	220	165	145	585	45
RTOR Reduction (vph)	0	80	0	0	23	0	0	81	0	0	3	0
Lane Group Flow (vph)	75	135	0	120	82	0	85	304	0	145	627	0
Turn Type	pm+pt			pm+pt			pm+pt			pm+pt		
Protected Phases	3	8		7	4		1	6		5	2	
Permitted Phases	8			4			6			2		
Actuated Green, G (s)	15.1	15.1		13.0	13.0		61.2	61.2		70.0	70.0	
Effective Green, g (s)	15.1	15.1		13.0	13.0		61.2	61.2		70.0	70.0	
Actuated g/C Ratio	0.13	0.13		0.11	0.11		0.51	0.51		0.58	0.58	
Clearance Time (s)	4.0	4.0		4.0	4.0		4.0	4.0		4.0	4.0	
Vehicle Extension (s)	2.5	2.5		2.5	2.5		2.5	2.5		2.5	2.5	
Lane Grp Cap (vph)	234	210		202	190		378	1689		674	2042	
v/s Ratio Prot	0.04	c0.08		0.06	0.05		c0.01	0.09		0.03	c0.18	
v/s Ratio Perm	0.00			c0.01			0.10			0.10		
v/c Ratio	0.32	0.64		0.59	0.43		0.22	0.18		0.22	0.31	
Uniform Delay, d1	46.2	49.9		51.2	50.0		15.7	15.9		12.2	12.7	
Progression Factor	1.00	1.00		1.00	1.00		0.69	0.50		1.00	1.00	
Incremental Delay, d2	0.6	5.8		3.9	1.1		0.1	0.2		0.1	0.4	
Delay (s)	46.8	55.7		55.1	51.2		11.0	8.1		12.4	13.1	
Level of Service	D	E		E	D		B	A		B	B	
Approach Delay (s)		53.4			53.3			8.6			12.9	
Approach LOS		D			D			A			B	

Intersection Summary			
HCM Average Control Delay	23.6	HCM Level of Service	C
HCM Volume to Capacity ratio	0.38		
Actuated Cycle Length (s)	120.0	Sum of lost time (s)	12.0
Intersection Capacity Utilization	54.9%	ICU Level of Service	A
Analysis Period (min)	15		
c Critical Lane Group			

Movement	EBL	EBT	EBR	WBL	WBT	WBR	NBL	NBT	NBR	SBL	SBT	SBR
Lane Configurations												
Volume (vph)	20	1410	540	145	1560	65	150	225	90	40	270	90
Ideal Flow (vphpl)	1900	1900	1900	1900	1900	1900	1900	1900	1900	1900	1900	1900
Total Lost time (s)	4.0	4.0		4.0	4.0	4.0	3.5	4.0		3.5	4.0	
Lane Util. Factor	1.00	0.95		1.00	0.95	1.00	1.00	1.00		1.00	1.00	
Frt	1.00	0.96		1.00	1.00	0.85	1.00	0.96		1.00	0.96	
Flt Protected	0.95	1.00		0.95	1.00	1.00	0.95	1.00		0.95	1.00	
Satd. Flow (prot)	1752	3392		1752	3539	1568	1787	1801		1752	1802	
Flt Permitted	0.95	1.00		0.95	1.00	1.00	0.95	1.00		0.95	1.00	
Satd. Flow (perm)	1752	3392		1752	3539	1568	1787	1801		1752	1802	
Peak-hour factor, PHF	1.00	1.00	1.00	1.00	1.00	1.00	1.00	1.00	1.00	1.00	1.00	1.00
Adj. Flow (vph)	20	1410	540	145	1560	65	150	225	90	40	270	90
RTOR Reduction (vph)	0	34	0	0	0	11	0	12	0	0	10	0
Lane Group Flow (vph)	20	1916	0	145	1560	54	150	303	0	40	350	0
Heavy Vehicles (%)	3%	2%	2%	3%	2%	3%	1%	1%	1%	3%	0%	6%
Turn Type	Prot			Prot		Perm	Prot			Prot		
Protected Phases	5	2		1	6		3	8		7	4	
Permitted Phases						6						
Actuated Green, G (s)	2.0	49.8		20.4	68.2	68.2	6.0	27.1		5.5	26.6	
Effective Green, g (s)	2.0	50.5		20.4	68.9	68.9	6.5	27.6		6.0	27.1	
Actuated g/C Ratio	0.02	0.42		0.17	0.57	0.57	0.05	0.23		0.05	0.23	
Clearance Time (s)	4.0	4.7		4.0	4.7	4.7	4.0	4.5		4.0	4.5	
Vehicle Extension (s)	2.3	4.5		2.3	4.5	4.5	2.5	2.5		2.5	2.5	
Lane Grp Cap (vph)	29	1427		298	2032	900	97	414		88	407	
v/s Ratio Prot	0.01	c0.56		0.08	c0.44		c0.08	0.17		0.02	c0.19	
v/s Ratio Perm						0.03						
v/c Ratio	0.69	1.34		0.49	0.77	0.06	1.55	0.73		0.45	0.86	
Uniform Delay, d1	58.7	34.8		45.1	19.5	11.3	56.8	42.8		55.4	44.6	
Progression Factor	0.97	1.32		0.70	0.29	0.13	1.00	1.00		1.00	1.00	
Incremental Delay, d2	38.0	158.2		0.6	2.2	0.1	290.4	6.2		2.7	16.2	
Delay (s)	94.7	203.9		31.9	7.8	1.6	347.1	48.9		58.1	60.8	
Level of Service	F	F		C	A	A	F	D		E	E	
Approach Delay (s)		202.8			9.6			145.1			60.5	
Approach LOS		F			A			F			E	

Intersection Summary			
HCM Average Control Delay	110.3	HCM Level of Service	F
HCM Volume to Capacity ratio	1.09		
Actuated Cycle Length (s)	120.0	Sum of lost time (s)	11.5
Intersection Capacity Utilization	105.6%	ICU Level of Service	G
Analysis Period (min)	15		

c Critical Lane Group

Movement	WBL	WBR	NBT	NBR	SBL	SBT
Lane Configurations						
Volume (veh/h)	200	215	290	75	215	510
Sign Control	Stop		Free			Free
Grade	0%		0%			0%
Peak Hour Factor	1.00	1.00	1.00	1.00	1.00	1.00
Hourly flow rate (vph)	200	215	290	75	215	510
Pedestrians						
Lane Width (ft)						
Walking Speed (ft/s)						
Percent Blockage						
Right turn flare (veh)						
Median type			None			None
Median storage veh)						
Upstream signal (ft)						718
pX, platoon unblocked	0.93					
vC, conflicting volume	1268	328			365	
vC1, stage 1 conf vol						
vC2, stage 2 conf vol						
vCu, unblocked vol	1251	328			365	
tC, single (s)	6.4	6.2			4.1	
tC, 2 stage (s)						
tF (s)	3.5	3.3			2.2	
p0 queue free %	0	70			82	
cM capacity (veh/h)	146	714			1194	

Direction, Lane #	WB 1	NB 1	SB 1	SB 2
Volume Total	415	365	215	510
Volume Left	200	0	215	0
Volume Right	215	75	0	0
cSH	248	1700	1194	1700
Volume to Capacity	1.67	0.21	0.18	0.30
Queue Length 95th (ft)	667	0	16	0
Control Delay (s)	354.3	0.0	8.7	0.0
Lane LOS	F		A	
Approach Delay (s)	354.3	0.0	2.6	
Approach LOS	F			

Intersection Summary			
Average Delay	98.9		
Intersection Capacity Utilization	67.3%	ICU Level of Service	C
Analysis Period (min)	15		

Movement	EBL	EBT	EBR	WBL	WBT	WBR	NBL	NBT	NBR	SBL	SBT	SBR
Lane Configurations												
Volume (vph)	145	1300	230	200	1400	170	205	190	120	225	255	95
Ideal Flow (vphpl)	1900	1900	1900	1900	1900	1900	1900	1900	1900	1900	1900	1900
Total Lost time (s)	4.0	4.0	4.0	4.0	4.0	4.0	4.0	4.0	4.0	4.0	4.0	
Lane Util. Factor	1.00	0.95	1.00	1.00	0.95	1.00	1.00	1.00	1.00	1.00	1.00	
Frt	1.00	1.00	0.85	1.00	1.00	0.85	1.00	1.00	0.85	1.00	0.96	
Flt Protected	0.95	1.00	1.00	0.95	1.00	1.00	0.95	1.00	1.00	0.95	1.00	
Satd. Flow (prot)	1805	3610	1615	1805	3312	1615	1805	1900	1615	1805	1823	
Flt Permitted	0.95	1.00	1.00	0.95	1.00	1.00	0.95	1.00	1.00	0.95	1.00	
Satd. Flow (perm)	1805	3610	1615	1805	3312	1615	1805	1900	1615	1805	1823	
Peak-hour factor, PHF	1.00	1.00	1.00	1.00	1.00	1.00	1.00	1.00	1.00	1.00	1.00	1.00
Adj. Flow (vph)	145	1300	230	200	1400	170	205	190	120	225	255	95
RTOR Reduction (vph)	0	0	95	0	0	29	0	0	104	0	11	0
Lane Group Flow (vph)	145	1300	135	200	1400	141	205	190	16	225	339	0
Heavy Vehicles (%)	0%	0%	0%	0%	9%	0%	0%	0%	0%	0%	0%	0%
Turn Type	Prot		Perm	Prot		Perm	Prot		Perm	Prot		
Protected Phases	5	2		1	6		7	4		3	8	
Permitted Phases			2			6			4			
Actuated Green, G (s)	14.3	53.6	53.6	13.5	52.8	52.8	16.5	15.3	15.3	19.7	18.5	
Effective Green, g (s)	14.3	55.0	55.0	13.5	54.2	54.2	16.5	15.8	15.8	19.7	19.0	
Actuated g/C Ratio	0.12	0.46	0.46	0.11	0.45	0.45	0.14	0.13	0.13	0.16	0.16	
Clearance Time (s)	4.0	5.4	5.4	4.0	5.4	5.4	4.0	4.5	4.5	4.0	4.5	
Vehicle Extension (s)	2.3	4.5	4.5	2.3	4.5	4.5	2.3	2.3	2.3	2.3	2.3	
Lane Grp Cap (vph)	215	1655	740	203	1496	729	248	250	213	296	289	
v/s Ratio Prot	0.08	c0.36		0.11	c0.42		0.11	0.10		c0.12	c0.19	
v/s Ratio Perm			0.08			0.09			0.01			
v/c Ratio	0.67	0.79	0.18	0.99	0.94	0.19	0.83	0.76	0.07	0.76	1.17	
Uniform Delay, d1	50.6	27.5	19.2	53.2	31.2	19.8	50.4	50.3	45.7	47.9	50.5	
Progression Factor	1.24	0.26	0.17	1.00	1.00	1.00	1.00	1.00	1.00	1.00	1.00	
Incremental Delay, d2	5.5	3.0	0.4	58.4	12.3	0.6	19.1	11.9	0.1	10.2	108.3	
Delay (s)	68.0	10.1	3.7	111.6	43.6	20.4	69.5	62.2	45.8	58.1	158.8	
Level of Service	E	B	A	F	D	C	E	E	D	E	F	
Approach Delay (s)		14.2			49.0			61.3			119.4	
Approach LOS		B			D			E			F	

Intersection Summary			
HCM Average Control Delay	46.5	HCM Level of Service	D
HCM Volume to Capacity ratio	0.95		
Actuated Cycle Length (s)	120.0	Sum of lost time (s)	16.0
Intersection Capacity Utilization	90.9%	ICU Level of Service	E
Analysis Period (min)	15		

c Critical Lane Group

Movement	WBL	WBR	NBT	NBR	SBL	SBT
Lane Configurations						
Volume (veh/h)	160	210	740	60	175	1170
Sign Control	Stop		Free			Free
Grade	0%		0%			0%
Peak Hour Factor	1.00	1.00	1.00	1.00	1.00	1.00
Hourly flow rate (vph)	160	210	740	60	175	1170
Pedestrians						
Lane Width (ft)						
Walking Speed (ft/s)						
Percent Blockage						
Right turn flare (veh)						
Median type			None			None
Median storage veh)						
Upstream signal (ft)						839
pX, platoon unblocked	0.90					
vC, conflicting volume	1705	400			800	
vC1, stage 1 conf vol						
vC2, stage 2 conf vol						
vCu, unblocked vol	1555	400			800	
tC, single (s)	6.8	6.9			4.1	
tC, 2 stage (s)						
tF (s)	3.5	3.3			2.2	
p0 queue free %	0	65			79	
cM capacity (veh/h)	73	600			819	

Direction, Lane #	WB 1	NB 1	NB 2	SB 1	SB 2	SB 3
Volume Total	370	493	307	175	585	585
Volume Left	160	0	0	175	0	0
Volume Right	210	0	60	0	0	0
cSH	146	1700	1700	819	1700	1700
Volume to Capacity	2.54	0.29	0.18	0.21	0.34	0.34
Queue Length 95th (ft)	808	0	0	20	0	0
Control Delay (s)	761.5	0.0	0.0	10.6	0.0	0.0
Lane LOS	F			B		
Approach Delay (s)	761.5	0.0		1.4		
Approach LOS	F					

Intersection Summary			
Average Delay	112.8		
Intersection Capacity Utilization	65.1%	ICU Level of Service	C
Analysis Period (min)	15		

Movement	EBL	EBT	EBR	WBL	WBT	WBR	NBL	NBT	NBR	SBL	SBT	SBR
Lane Configurations												
Volume (vph)	180	1180	365	385	1450	140	300	610	150	210	710	160
Ideal Flow (vphpl)	1900	1900	1900	1900	1900	1900	1900	1900	1900	1900	1900	1900
Total Lost time (s)	4.0	4.0		4.0	4.0		4.0	4.0	4.0	4.0	4.0	4.0
Lane Util. Factor	1.00	0.95		1.00	0.95		1.00	0.95	1.00	1.00	0.95	1.00
Frt	1.00	0.96		1.00	0.99		1.00	1.00	0.85	1.00	1.00	0.85
Flt Protected	0.95	1.00		0.95	1.00		0.95	1.00	1.00	0.95	1.00	1.00
Satd. Flow (prot)	1787	3482		1805	3530		1805	3610	1615	1805	3574	1615
Flt Permitted	0.95	1.00		0.95	1.00		0.95	1.00	1.00	0.95	1.00	1.00
Satd. Flow (perm)	1787	3482		1805	3530		1805	3610	1615	1805	3574	1615
Peak-hour factor, PHF	1.00	1.00	1.00	1.00	1.00	1.00	1.00	1.00	1.00	1.00	1.00	1.00
Adj. Flow (vph)	180	1180	365	385	1450	140	300	610	150	210	710	160
RTOR Reduction (vph)	0	23	0	0	5	0	0	0	37	0	0	47
Lane Group Flow (vph)	180	1523	0	385	1585	0	300	610	113	210	710	113
Heavy Vehicles (%)	1%	0%	0%	0%	1%	0%	0%	0%	0%	0%	1%	0%
Turn Type	Prot			Prot			Prot		pm+ov	Prot		Perm
Protected Phases	5	2		1	6		3	8	1	7	4	
Permitted Phases									8			4
Actuated Green, G (s)	17.8	64.5		14.5	61.2		13.5	21.5	36.0	13.5	21.5	21.5
Effective Green, g (s)	17.3	65.0		14.0	61.7		13.0	22.0	35.0	13.0	22.0	22.0
Actuated g/C Ratio	0.13	0.50		0.11	0.47		0.10	0.17	0.27	0.10	0.17	0.17
Clearance Time (s)	3.5	4.5		3.5	4.5		3.5	4.5	3.5	3.5	4.5	4.5
Vehicle Extension (s)	2.3	4.3		2.3	4.3		2.3	2.3	2.3	2.3	2.3	2.3
Lane Grp Cap (vph)	238	1741		194	1675		181	611	435	181	605	273
v/s Ratio Prot	0.10	c0.44		c0.21	c0.45		c0.17	0.17	0.03	0.12	c0.20	
v/s Ratio Perm									0.04			0.07
v/c Ratio	0.76	0.87		1.98	0.95		1.66	1.00	0.26	1.16	1.17	0.41
Uniform Delay, d1	54.3	28.9		58.0	32.6		58.5	54.0	37.3	58.5	54.0	48.2
Progression Factor	1.00	1.00		1.00	1.00		1.00	1.00	1.00	1.00	1.00	1.00
Incremental Delay, d2	11.9	6.5		461.0	12.5		319.1	35.7	0.2	116.6	94.7	0.6
Delay (s)	66.3	35.3		519.0	45.1		377.6	89.7	37.5	175.1	148.7	48.8
Level of Service	E	D		F	D		F	F	D	F	F	D
Approach Delay (s)		38.6			137.5			163.8			139.0	
Approach LOS		D			F			F			F	

Intersection Summary			
HCM Average Control Delay	113.3	HCM Level of Service	F
HCM Volume to Capacity ratio	1.22		
Actuated Cycle Length (s)	130.0	Sum of lost time (s)	20.0
Intersection Capacity Utilization	115.2%	ICU Level of Service	H
Analysis Period (min)	15		

c Critical Lane Group

Movement	WBL	WBR	NBT	NBR	SBL	SBT
Lane Configurations						
Volume (veh/h)	30	40	465	20	80	920
Sign Control	Stop		Free			Free
Grade	0%		0%			0%
Peak Hour Factor	1.00	1.00	1.00	1.00	1.00	1.00
Hourly flow rate (vph)	30	40	465	20	80	920
Pedestrians						
Lane Width (ft)						
Walking Speed (ft/s)						
Percent Blockage						
Right turn flare (veh)						
Median type			None			None
Median storage veh)						
Upstream signal (ft)						
pX, platoon unblocked						
vC, conflicting volume	1555	475			485	
vC1, stage 1 conf vol						
vC2, stage 2 conf vol						
vCu, unblocked vol	1555	475			485	
tC, single (s)	6.4	6.2			4.1	
tC, 2 stage (s)						
tF (s)	3.5	3.3			2.2	
p0 queue free %	74	93			93	
cM capacity (veh/h)	116	592			1083	

Direction, Lane #	WB 1	NB 1	SB 1	SB 2
Volume Total	70	485	80	920
Volume Left	30	0	80	0
Volume Right	40	20	0	0
cSH	214	1700	1083	1700
Volume to Capacity	0.33	0.29	0.07	0.54
Queue Length 95th (ft)	34	0	6	0
Control Delay (s)	29.7	0.0	8.6	0.0
Lane LOS	D		A	
Approach Delay (s)	29.7	0.0	0.7	
Approach LOS	D			

Intersection Summary			
Average Delay	1.8		
Intersection Capacity Utilization	60.0%	ICU Level of Service	B
Analysis Period (min)	15		

Movement	WBL	WBR	NBT	NBR	SBL	SBT
Lane Configurations						
Volume (veh/h)	10	30	455	10	105	845
Sign Control	Stop		Free			Free
Grade	0%		0%			0%
Peak Hour Factor	1.00	1.00	1.00	1.00	1.00	1.00
Hourly flow rate (vph)	10	30	455	10	105	845
Pedestrians						
Lane Width (ft)						
Walking Speed (ft/s)						
Percent Blockage						
Right turn flare (veh)						
Median type			None			None
Median storage veh)						
Upstream signal (ft)						
pX, platoon unblocked						
vC, conflicting volume	1515	460			465	
vC1, stage 1 conf vol						
vC2, stage 2 conf vol						
vCu, unblocked vol	1515	460			465	
tC, single (s)	6.4	6.2			4.1	
tC, 2 stage (s)						
tF (s)	3.5	3.3			2.2	
p0 queue free %	92	95			90	
cM capacity (veh/h)	120	603			1102	

Direction, Lane #	WB 1	WB 2	NB 1	SB 1	SB 2
Volume Total	10	30	465	105	845
Volume Left	10	0	0	105	0
Volume Right	0	30	10	0	0
cSH	120	603	1700	1102	1700
Volume to Capacity	0.08	0.05	0.27	0.10	0.50
Queue Length 95th (ft)	7	4	0	8	0
Control Delay (s)	37.8	11.3	0.0	8.6	0.0
Lane LOS	E	B		A	
Approach Delay (s)	17.9		0.0	1.0	
Approach LOS	C				

Intersection Summary			
Average Delay	1.1		
Intersection Capacity Utilization	54.9%	ICU Level of Service	A
Analysis Period (min)	15		

Movement	WBL	WBR	NBT	NBR	SBL	SBT
Lane Configurations						
Volume (veh/h)	10	70	445	40	200	655
Sign Control	Stop		Free			Free
Grade	0%		0%			0%
Peak Hour Factor	1.00	1.00	1.00	1.00	1.00	1.00
Hourly flow rate (vph)	10	70	445	40	200	655
Pedestrians						
Lane Width (ft)						
Walking Speed (ft/s)						
Percent Blockage						
Right turn flare (veh)						
Median type			TWLTL			TWLTL
Median storage veh)			2			2
Upstream signal (ft)						
pX, platoon unblocked						
vC, conflicting volume	1520	465			485	
vC1, stage 1 conf vol	465					
vC2, stage 2 conf vol	1055					
vCu, unblocked vol	1520	465			485	
tC, single (s)	6.4	6.2			4.1	
tC, 2 stage (s)	5.4					
tF (s)	3.5	3.3			2.2	
p0 queue free %	96	88			82	
cM capacity (veh/h)	256	599			1083	

Direction, Lane #	WB 1	NB 1	SB 1	SB 2
Volume Total	80	485	200	655
Volume Left	10	0	200	0
Volume Right	70	40	0	0
cSH	513	1700	1083	1700
Volume to Capacity	0.16	0.29	0.18	0.39
Queue Length 95th (ft)	14	0	17	0
Control Delay (s)	13.3	0.0	9.1	0.0
Lane LOS	B		A	
Approach Delay (s)	13.3	0.0	2.1	
Approach LOS	B			

Intersection Summary			
Average Delay	2.0		
Intersection Capacity Utilization	53.1%	ICU Level of Service	A
Analysis Period (min)	15		

Movement	EBL	EBT	EBR	WBL	WBT	WBR	NBL	NBT	NBR	SBL	SBT	SBR
Lane Configurations												
Volume (veh/h)	60	25	375	5	20	15	180	465	30	20	625	40
Sign Control		Stop			Stop			Free			Free	
Grade		0%			0%			0%			0%	
Peak Hour Factor	1.00	1.00	1.00	1.00	1.00	1.00	1.00	1.00	1.00	1.00	1.00	1.00
Hourly flow rate (vph)	60	25	375	5	20	15	180	465	30	20	625	40
Pedestrians												
Lane Width (ft)												
Walking Speed (ft/s)												
Percent Blockage												
Right turn flare (veh)												
Median type								None			TWLTL	
Median storage veh)											2	
Upstream signal (ft)								1262				
pX, platoon unblocked												
vC, conflicting volume	1535	1540	645	1892	1545	480	665			495		
vC1, stage 1 conf vol	685	685		840	840							
vC2, stage 2 conf vol	850	855		1052	705							
vCu, unblocked vol	1535	1540	645	1892	1545	480	665			495		
tC, single (s)	7.1	6.5	6.2	7.1	6.5	6.2	4.1			4.1		
tC, 2 stage (s)	6.1	5.5		6.1	5.5							
tF (s)	3.5	4.0	3.3	3.5	4.0	3.3	2.2			2.2		
p0 queue free %	72	90	21	42	90	97	81			98		
cM capacity (veh/h)	214	246	474	9	209	588	929			1074		

Direction, Lane #	EB 1	WB 1	NB 1	NB 2	SB 1	SB 2
Volume Total	460	40	180	495	20	665
Volume Left	60	5	180	0	20	0
Volume Right	375	15	0	30	0	40
cSH	392	57	929	1700	1074	1700
Volume to Capacity	1.17	0.70	0.19	0.29	0.02	0.39
Queue Length 95th (ft)	451	73	18	0	1	0
Control Delay (s)	132.6	155.7	9.8	0.0	8.4	0.0
Lane LOS	F	F	A		A	
Approach Delay (s)	132.6	155.7	2.6		0.2	
Approach LOS	F	F				

Intersection Summary			
Average Delay	37.2		
Intersection Capacity Utilization	89.7%	ICU Level of Service	E
Analysis Period (min)	15		

Movement	EBL	EBT	EBR	WBL	WBT	WBR	NBL	NBT	NBR	SBL	SBT	SBR
Lane Configurations												
Volume (vph)	155	400	20	50	475	335	5	185	65	270	525	210
Ideal Flow (vphpl)	1900	1900	1900	1900	1900	1900	1900	1900	1900	1900	1900	1900
Total Lost time (s)	4.0	4.0		4.0	4.0	4.0	4.0	4.0		4.0	4.0	
Lane Util. Factor	1.00	1.00		1.00	1.00	1.00	1.00	1.00		1.00	1.00	
Frt	1.00	0.99		1.00	1.00	0.85	1.00	0.96		1.00	0.96	
Flt Protected	0.95	1.00		0.95	1.00	1.00	0.95	1.00		0.95	1.00	
Satd. Flow (prot)	1805	1886		1805	1900	1615	1805	1826		1805	1819	
Flt Permitted	0.95	1.00		0.95	1.00	1.00	0.95	1.00		0.95	1.00	
Satd. Flow (perm)	1805	1886		1805	1900	1615	1805	1826		1805	1819	
Peak-hour factor, PHF	1.00	1.00	1.00	1.00	1.00	1.00	1.00	1.00	1.00	1.00	1.00	1.00
Adj. Flow (vph)	155	400	20	50	475	335	5	185	65	270	525	210
RTOR Reduction (vph)	0	1	0	0	0	176	0	10	0	0	12	0
Lane Group Flow (vph)	155	419	0	50	475	159	5	240	0	270	723	0
Heavy Vehicles (%)	0%	0%	0%	0%	0%	0%	0%	0%	0%	0%	0%	0%
Turn Type	Prot			Prot		Perm	Prot			Prot		
Protected Phases	5	2		1	6		3	8		7	4	
Permitted Phases						6						
Actuated Green, G (s)	10.2	36.4		3.8	30.0	30.0	0.9	26.2		20.2	45.5	
Effective Green, g (s)	12.2	38.4		5.8	32.0	32.0	2.9	28.2		22.2	47.5	
Actuated g/C Ratio	0.11	0.35		0.05	0.29	0.29	0.03	0.25		0.20	0.43	
Clearance Time (s)	6.0	6.0		6.0	6.0	6.0	6.0	6.0		6.0	6.0	
Vehicle Extension (s)	2.4	2.7		2.7	2.7	2.7	2.6	2.5		2.6	2.5	
Lane Grp Cap (vph)	199	655		95	550	467	47	466		362	781	
v/s Ratio Prot	c0.09	0.22		0.03	c0.25		0.00	0.13		c0.15	c0.40	
v/s Ratio Perm						0.10						
v/c Ratio	0.78	0.64		0.53	0.86	0.34	0.11	0.51		0.75	0.93	
Uniform Delay, d1	47.9	30.3		51.1	37.2	31.0	52.6	35.3		41.5	29.9	
Progression Factor	1.00	1.00		1.00	1.00	1.00	1.00	1.00		1.00	1.00	
Incremental Delay, d2	16.5	1.9		4.5	13.2	0.4	0.8	0.7		7.8	16.7	
Delay (s)	64.4	32.2		55.5	50.4	31.3	53.4	36.0		49.3	46.6	
Level of Service	E	C		E	D	C	D	D		D	D	
Approach Delay (s)		40.9			43.3			36.4			47.3	
Approach LOS		D			D			D			D	

Intersection Summary			
HCM Average Control Delay	43.6	HCM Level of Service	D
HCM Volume to Capacity ratio	0.89		
Actuated Cycle Length (s)	110.6	Sum of lost time (s)	16.0
Intersection Capacity Utilization	91.5%	ICU Level of Service	F
Analysis Period (min)	15		

c Critical Lane Group

Movement	EBL	EBT	EBR	WBL	WBT	WBR	NBL	NBT	NBR	SBL	SBT	SBR
Lane Configurations												
Volume (vph)	140	660	5	5	870	365	5	5	5	210	5	110
Ideal Flow (vphpl)	1900	1900	1900	1900	1900	1900	1900	1900	1900	1900	1900	1900
Total Lost time (s)	4.0	4.0		4.0	4.0	6.5		4.0			4.0	4.0
Lane Util. Factor	1.00	1.00		1.00	1.00	1.00		1.00			1.00	1.00
Frt	1.00	1.00		1.00	1.00	0.85		0.95			1.00	0.85
Flt Protected	0.95	1.00		0.95	1.00	1.00		0.98			0.95	1.00
Satd. Flow (prot)	1805	1898		1805	1900	1615		1785			1812	1615
Flt Permitted	0.95	1.00		0.95	1.00	1.00		0.95			0.95	1.00
Satd. Flow (perm)	1805	1898		1805	1900	1615		1728			1812	1615
Peak-hour factor, PHF	1.00	1.00	1.00	1.00	1.00	1.00	1.00	1.00	1.00	1.00	1.00	1.00
Adj. Flow (vph)	140	660	5	5	870	365	5	5	5	210	5	110
RTOR Reduction (vph)	0	0	0	0	0	99	0	5	0	0	0	91
Lane Group Flow (vph)	140	665	0	5	870	266	0	10	0	0	215	19
Heavy Vehicles (%)	0%	0%	0%	0%	0%	0%	0%	0%	0%	0%	0%	0%
Turn Type	Prot			Prot		Perm	Perm			Split		Perm
Protected Phases	5	2		1	6			8		4	4	
Permitted Phases						6	8					4
Actuated Green, G (s)	9.2	53.9		0.9	44.6	44.6		1.8			13.7	13.7
Effective Green, g (s)	11.2	55.9		1.9	46.6	44.1		2.8			15.7	15.7
Actuated g/C Ratio	0.12	0.61		0.02	0.50	0.48		0.03			0.17	0.17
Clearance Time (s)	6.0	6.0		5.0	6.0	6.0		5.0			6.0	6.0
Vehicle Extension (s)	2.4	2.7		2.4	2.7	2.7		2.5			2.5	2.5
Lane Grp Cap (vph)	219	1149		37	959	772		52			308	275
v/s Ratio Prot	c0.08	0.35		0.00	c0.46						c0.12	
v/s Ratio Perm						0.16		c0.01				0.01
v/c Ratio	0.64	0.58		0.14	0.91	0.34		0.20			0.70	0.07
Uniform Delay, d1	38.6	11.0		44.4	20.9	15.1		43.7			36.1	32.2
Progression Factor	1.00	1.00		1.00	1.00	1.00		1.00			1.00	1.00
Incremental Delay, d2	5.1	0.6		1.1	12.0	0.2		1.3			6.2	0.1
Delay (s)	43.7	11.7		45.5	32.9	15.3		45.0			42.3	32.2
Level of Service	D	B		D	C	B		D			D	C
Approach Delay (s)		17.3			27.7			45.0			38.9	
Approach LOS		B			C			D			D	

Intersection Summary			
HCM Average Control Delay	25.8	HCM Level of Service	C
HCM Volume to Capacity ratio	0.80		
Actuated Cycle Length (s)	92.3	Sum of lost time (s)	16.0
Intersection Capacity Utilization	82.1%	ICU Level of Service	E
Analysis Period (min)	15		

c Critical Lane Group

Movement	EBL	EBT	EBR	WBL	WBT	WBR	NBL	NBT	NBR	SBL	SBT	SBR
Lane Configurations												
Volume (vph)	155	605	170	150	1000	110	230	365	65	180	695	335
Ideal Flow (vphpl)	1900	1900	1900	1900	1900	1900	1900	1900	1900	1900	1900	1900
Total Lost time (s)	4.0	4.0	5.0	4.0	4.0	5.0	4.0	5.0		4.0	4.0	5.0
Lane Util. Factor	1.00	1.00	1.00	1.00	1.00	1.00	1.00	1.00		1.00	1.00	1.00
Frt	1.00	1.00	0.85	1.00	1.00	0.85	1.00	0.98		1.00	1.00	0.85
Flt Protected	0.95	1.00	1.00	0.95	1.00	1.00	0.95	1.00		0.95	1.00	1.00
Satd. Flow (prot)	1805	1900	1615	1805	1900	1615	1805	1857		1805	1900	1615
Flt Permitted	0.95	1.00	1.00	0.95	1.00	1.00	0.95	1.00		0.95	1.00	1.00
Satd. Flow (perm)	1805	1900	1615	1805	1900	1615	1805	1857		1805	1900	1615
Peak-hour factor, PHF	1.00	1.00	1.00	1.00	1.00	1.00	1.00	1.00	1.00	1.00	1.00	1.00
Adj. Flow (vph)	155	605	170	150	1000	110	230	365	65	180	695	335
RTOR Reduction (vph)	0	0	110	0	0	36	0	5	0	0	0	120
Lane Group Flow (vph)	155	605	60	150	1000	74	230	425	0	180	695	215
Heavy Vehicles (%)	0%	0%	0%	0%	0%	0%	0%	0%	0%	0%	0%	0%
Turn Type	Prot		Perm	Prot		Perm	Prot			Prot		Perm
Protected Phases	5	2		1	6		3	8		7	4	
Permitted Phases			2			6						4
Actuated Green, G (s)	8.0	35.5	35.5	11.0	38.5	38.5	13.0	39.7		14.8	41.5	41.5
Effective Green, g (s)	9.0	36.0	35.0	12.0	39.0	38.0	14.0	39.2		15.8	42.0	41.0
Actuated g/C Ratio	0.08	0.30	0.29	0.10	0.32	0.32	0.12	0.33		0.13	0.35	0.34
Clearance Time (s)	5.0	4.5	4.5	5.0	4.5	4.5	5.0	4.5		5.0	4.5	4.5
Vehicle Extension (s)	3.0	1.0	1.0	3.0	1.0	1.0	3.0	1.0		3.0	1.0	1.0
Lane Grp Cap (vph)	135	570	471	181	618	511	211	607		238	665	552
v/s Ratio Prot	c0.09	0.32		0.08	c0.53		c0.13	0.23		0.10	c0.37	
v/s Ratio Perm			0.04			0.05						0.13
v/c Ratio	1.15	1.06	0.13	0.83	1.62	0.14	1.09	0.70		0.76	1.05	0.39
Uniform Delay, d1	55.5	42.0	31.3	53.0	40.5	29.4	53.0	35.3		50.2	39.0	30.0
Progression Factor	1.00	1.00	1.00	1.00	1.00	1.00	1.00	1.00		1.00	1.00	1.00
Incremental Delay, d2	122.8	55.0	0.0	25.7	285.6	0.0	88.0	2.9		12.8	47.2	0.2
Delay (s)	178.3	97.0	31.3	78.7	326.1	29.4	141.0	38.1		63.1	86.2	30.2
Level of Service	F	F	C	E	F	C	F	D		E	F	C
Approach Delay (s)		98.6			270.7			74.0			67.3	
Approach LOS		F			F			E			E	

Intersection Summary			
HCM Average Control Delay	138.7	HCM Level of Service	F
HCM Volume to Capacity ratio	1.23		
Actuated Cycle Length (s)	120.0	Sum of lost time (s)	12.0
Intersection Capacity Utilization	123.9%	ICU Level of Service	H
Analysis Period (min)	15		

c Critical Lane Group

Movement	EBL	EBT	EBR	WBL	WBT	WBR	NBL	NBT	NBR	SBL	SBT	SBR
Lane Configurations												
Volume (veh/h)	65	20	60	120	30	130	70	385	50	30	395	100
Sign Control		Stop			Stop			Free			Free	
Grade		0%			0%			0%			0%	
Peak Hour Factor	1.00	1.00	1.00	1.00	1.00	1.00	1.00	1.00	1.00	1.00	1.00	1.00
Hourly flow rate (vph)	65	20	60	120	30	130	70	385	50	30	395	100
Pedestrians												
Lane Width (ft)												
Walking Speed (ft/s)												
Percent Blockage												
Right turn flare (veh)												
Median type								None			None	
Median storage veh)												
Upstream signal (ft)								526			1278	
pX, platoon unblocked	0.93	0.93		0.93	0.93	0.93				0.93		
vC, conflicting volume	1175	1080	445	1075	1105	410	495			435		
vC1, stage 1 conf vol												
vC2, stage 2 conf vol												
vCu, unblocked vol	1150	1047	445	1042	1074	325	495			352		
tC, single (s)	7.1	6.5	6.2	7.1	6.5	6.2	4.1			4.1		
tC, 2 stage (s)												
tF (s)	3.5	4.0	3.3	3.5	4.0	3.3	2.2			2.2		
p0 queue free %	39	90	90	20	84	80	93			97		
cM capacity (veh/h)	107	192	613	149	185	664	1069			1120		

Direction, Lane #	EB 1	WB 1	NB 1	NB 2	SB 1	SB 2
Volume Total	145	280	70	435	30	495
Volume Left	65	120	70	0	30	0
Volume Right	60	130	0	50	0	100
cSH	179	241	1069	1700	1120	1700
Volume to Capacity	0.81	1.16	0.07	0.26	0.03	0.29
Queue Length 95th (ft)	139	324	5	0	2	0
Control Delay (s)	78.1	152.0	8.6	0.0	8.3	0.0
Lane LOS	F	F	A		A	
Approach Delay (s)	78.1	152.0	1.2		0.5	
Approach LOS	F	F				

Intersection Summary			
Average Delay	37.6		
Intersection Capacity Utilization	62.3%	ICU Level of Service	B
Analysis Period (min)	15		

Appendix F: 2035 Traffic Operations Mitigated without South Hillsboro

Movement	EBL	EBR	NBL	NBT	SBT	SBR
Lane Configurations						
Volume (veh/h)	170	50	100	600	180	50
Sign Control	Stop			Free	Free	
Grade	0%			0%	0%	
Peak Hour Factor	1.00	1.00	1.00	1.00	1.00	1.00
Hourly flow rate (vph)	170	50	100	600	180	50
Pedestrians						
Lane Width (ft)						
Walking Speed (ft/s)						
Percent Blockage						
Right turn flare (veh)						
Median type				None	None	
Median storage veh)						
Upstream signal (ft)						
pX, platoon unblocked						
vC, conflicting volume	1005	205	230			
vC1, stage 1 conf vol						
vC2, stage 2 conf vol						
vCu, unblocked vol	1005	205	230			
tC, single (s)	6.4	6.2	4.1			
tC, 2 stage (s)						
tF (s)	3.5	3.3	2.2			
p0 queue free %	31	94	93			
cM capacity (veh/h)	248	836	1338			

Direction, Lane #	EB 1	EB 2	NB 1	NB 2	SB 1
Volume Total	170	50	100	600	230
Volume Left	170	0	100	0	0
Volume Right	0	50	0	0	50
cSH	248	836	1338	1700	1700
Volume to Capacity	0.69	0.06	0.07	0.35	0.14
Queue Length 95th (ft)	112	5	6	0	0
Control Delay (s)	46.3	9.6	7.9	0.0	0.0
Lane LOS	E	A	A		
Approach Delay (s)	37.9		1.1		0.0
Approach LOS	E				

Intersection Summary			
Average Delay	7.9		
Intersection Capacity Utilization	48.5%	ICU Level of Service	A
Analysis Period (min)	15		

Movement	EBL	EBT	EBR	WBL	WBT	WBR	NBL	NBT	NBR	SBL	SBT	SBR
Lane Configurations												
Volume (vph)	5	705	275	30	1185	35	315	255	35	45	70	5
Ideal Flow (vphpl)	1900	1900	1900	1900	1900	1900	1900	1900	1900	1900	1900	1900
Total Lost time (s)	4.0	4.0		4.0	4.0		3.0	4.0		3.0	4.0	
Lane Util. Factor	1.00	0.95		1.00	0.95		0.97	1.00		1.00	1.00	
Frt	1.00	0.96		1.00	1.00		1.00	0.98		1.00	0.99	
Flt Protected	0.95	1.00		0.95	1.00		0.95	1.00		0.95	1.00	
Satd. Flow (prot)	1805	3424		1805	3589		3502	1827		1770	1864	
Flt Permitted	0.12	1.00		0.23	1.00		0.95	1.00		0.95	1.00	
Satd. Flow (perm)	234	3424		446	3589		3502	1827		1770	1864	
Peak-hour factor, PHF	1.00	1.00	1.00	1.00	1.00	1.00	1.00	1.00	1.00	1.00	1.00	1.00
Adj. Flow (vph)	5	705	275	30	1185	35	315	255	35	45	70	5
RTOR Reduction (vph)	0	34	0	0	2	0	0	5	0	0	3	0
Lane Group Flow (vph)	5	946	0	30	1218	0	315	285	0	45	72	0
Heavy Vehicles (%)	0%	1%	1%	0%	0%	5%	0%	1%	10%	2%	1%	0%
Turn Type	pm+pt			pm+pt			Prot			Prot		
Protected Phases	5	2		1	6		3	8		7	4	
Permitted Phases	2			6								
Actuated Green, G (s)	52.1	52.1		57.0	56.5		11.6	22.2		3.0	13.6	
Effective Green, g (s)	52.1	52.6		57.0	57.0		12.6	23.2		4.0	14.6	
Actuated g/C Ratio	0.52	0.53		0.57	0.57		0.13	0.23		0.04	0.15	
Clearance Time (s)	4.0	4.5		4.0	4.5		4.0	5.0		4.0	5.0	
Vehicle Extension (s)	2.3	4.3		2.3	4.3		2.5	2.5		2.5	2.5	
Lane Grp Cap (vph)	134	1801		325	2046		441	424		71	272	
v/s Ratio Prot	0.00	c0.28		0.00	c0.34		c0.09	c0.16		0.03	0.04	
v/s Ratio Perm	0.02			0.05								
v/c Ratio	0.04	0.53		0.09	0.60		0.71	0.67		0.63	0.27	
Uniform Delay, d1	14.4	15.5		15.0	14.0		42.0	34.9		47.3	37.9	
Progression Factor	1.00	1.00		0.54	0.93		1.00	1.00		1.00	1.00	
Incremental Delay, d2	0.1	1.1		0.1	1.2		5.1	3.8		15.0	0.4	
Delay (s)	14.4	16.6		8.1	14.2		47.0	38.7		62.3	38.3	
Level of Service	B	B		A	B		D	D		E	D	
Approach Delay (s)		16.6			14.0			43.0			47.3	
Approach LOS		B			B			D			D	

Intersection Summary			
HCM Average Control Delay	22.2	HCM Level of Service	C
HCM Volume to Capacity ratio	0.63		
Actuated Cycle Length (s)	100.0	Sum of lost time (s)	11.0
Intersection Capacity Utilization	62.7%	ICU Level of Service	B
Analysis Period (min)	15		

c Critical Lane Group

Movement	EBL	EBT	EBR	WBL	WBT	WBR	NBL	NBT	NBR	SBL	SBT	SBR
Lane Configurations												
Volume (vph)	40	230	165	30	460	180	145	360	50	135	175	30
Ideal Flow (vphpl)	1900	1900	1900	1900	1900	1900	1900	1900	1900	1900	1900	1900
Total Lost time (s)	4.0	4.0		4.0	4.0		4.0	4.0	5.5	4.0	4.0	
Lane Util. Factor	1.00	1.00		1.00	1.00		1.00	1.00	1.00	1.00	1.00	
Frt	1.00	0.94		1.00	0.96		1.00	1.00	0.85	1.00	0.98	
Flt Protected	0.95	1.00		0.95	1.00		0.95	1.00	1.00	0.95	1.00	
Satd. Flow (prot)	1805	1766		1805	1820		1805	1900	1615	1805	1843	
Flt Permitted	0.95	1.00		0.95	1.00		0.95	1.00	1.00	0.95	1.00	
Satd. Flow (perm)	1805	1766		1805	1820		1805	1900	1615	1805	1843	
Peak-hour factor, PHF	1.00	1.00	1.00	1.00	1.00	1.00	1.00	1.00	1.00	1.00	1.00	1.00
Adj. Flow (vph)	40	230	165	30	460	180	145	360	50	135	175	30
RTOR Reduction (vph)	0	30	0	0	16	0	0	0	39	0	7	0
Lane Group Flow (vph)	40	365	0	30	624	0	145	360	11	135	198	0
Heavy Vehicles (%)	0%	0%	2%	0%	0%	0%	0%	0%	0%	0%	1%	0%
Turn Type	Prot			Prot			Prot		Perm	Prot		
Protected Phases	5	2		1	6		7	4		3	8	
Permitted Phases									4			
Actuated Green, G (s)	2.6	28.6		2.6	28.4		9.1	17.7	17.7	8.5	17.0	
Effective Green, g (s)	4.1	29.6		4.1	29.6		10.7	18.7	17.2	10.1	18.1	
Actuated g/C Ratio	0.05	0.38		0.05	0.38		0.14	0.24	0.22	0.13	0.23	
Clearance Time (s)	5.5	5.0		5.5	5.2		5.6	5.0	5.0	5.6	5.1	
Vehicle Extension (s)	3.1	2.5		3.1	2.5		2.9	2.5	2.5	2.9	2.5	
Lane Grp Cap (vph)	94	666		94	686		246	453	354	232	425	
v/s Ratio Prot	c0.02	0.21		0.02	c0.34		c0.08	c0.19		0.07	0.11	
v/s Ratio Perm									0.01			
v/c Ratio	0.43	0.55		0.32	0.91		0.59	0.79	0.03	0.58	0.47	
Uniform Delay, d1	36.1	19.2		35.9	23.2		31.8	28.1	24.1	32.2	26.0	
Progression Factor	1.00	1.00		1.00	1.00		1.00	1.00	1.00	1.00	1.00	
Incremental Delay, d2	3.2	0.7		2.0	15.9		3.5	9.0	0.0	3.6	0.6	
Delay (s)	39.3	19.9		37.9	39.1		35.3	37.1	24.1	35.8	26.6	
Level of Service	D	B		D	D		D	D	C	D	C	
Approach Delay (s)		21.7			39.0			35.5			30.3	
Approach LOS		C			D			D			C	

Intersection Summary			
HCM Average Control Delay	32.8	HCM Level of Service	C
HCM Volume to Capacity ratio	0.75		
Actuated Cycle Length (s)	78.5	Sum of lost time (s)	12.0
Intersection Capacity Utilization	71.6%	ICU Level of Service	C
Analysis Period (min)	15		

c Critical Lane Group

Movement	EBL	EBT	EBR	WBL	WBT	WBR	NBL	NBT	NBR	SBL	SBT	SBR
Lane Configurations												
Volume (vph)	60	620	65	100	900	80	150	285	140	105	210	50
Ideal Flow (vphpl)	1900	1900	1900	1900	1900	1900	1900	1900	1900	1900	1900	1900
Total Lost time (s)	4.0	4.0		4.0	4.0	4.0		4.0	4.0	4.0	4.0	4.0
Lane Util. Factor	1.00	0.95		1.00	0.95	1.00		0.95	1.00	1.00	1.00	1.00
Frt	1.00	0.99		1.00	1.00	0.85		1.00	0.85	1.00	1.00	0.85
Flt Protected	0.95	1.00		0.95	1.00	1.00		0.98	1.00	0.95	1.00	1.00
Satd. Flow (prot)	1805	3532		1626	3574	1615		3514	1495	1805	1900	1583
Flt Permitted	0.95	1.00		0.95	1.00	1.00		0.98	1.00	0.95	1.00	1.00
Satd. Flow (perm)	1805	3532		1626	3574	1615		3514	1495	1805	1900	1583
Peak-hour factor, PHF	1.00	1.00	1.00	1.00	1.00	1.00	1.00	1.00	1.00	1.00	1.00	1.00
Adj. Flow (vph)	60	620	65	100	900	80	150	285	140	105	210	50
RTOR Reduction (vph)	0	7	0	0	0	42	0	0	117	0	0	38
Lane Group Flow (vph)	60	678	0	100	900	38	0	435	23	105	210	12
Heavy Vehicles (%)	0%	0%	8%	11%	1%	0%	1%	1%	8%	0%	0%	2%
Turn Type	Prot			Prot		Perm	Split		Perm	Split		custom
Protected Phases	5	2		1	6		4	4		8	8	
Permitted Phases						6			4			8 5
Actuated Green, G (s)	5.3	38.5		13.5	46.7	46.7		16.4	16.4	15.1	15.1	24.4
Effective Green, g (s)	5.3	39.0		13.5	47.2	47.2		16.4	16.4	15.1	15.1	24.4
Actuated g/C Ratio	0.05	0.39		0.14	0.47	0.47		0.16	0.16	0.15	0.15	0.24
Clearance Time (s)	4.0	4.5		4.0	4.5	4.5		4.0	4.0	4.0	4.0	
Vehicle Extension (s)	2.3	4.3		2.3	4.3	4.3		2.3	2.3	2.3	2.3	
Lane Grp Cap (vph)	96	1377		220	1687	762		576	245	273	287	386
v/s Ratio Prot	c0.03	0.19		c0.06	c0.25			c0.12		0.06	c0.11	
v/s Ratio Perm						0.02			0.02			0.01
v/c Ratio	0.62	0.49		0.45	0.53	0.05		0.76	0.09	0.38	0.73	0.03
Uniform Delay, d1	46.4	23.0		39.9	18.6	14.3		39.9	35.5	38.3	40.5	28.8
Progression Factor	1.43	0.53		1.00	1.00	1.00		1.00	1.00	1.00	1.00	1.00
Incremental Delay, d2	8.7	1.1		0.9	1.2	0.1		5.2	0.1	0.5	8.5	0.0
Delay (s)	75.1	13.2		40.7	19.8	14.4		45.1	35.6	38.8	49.0	28.8
Level of Service	E	B		D	B	B		D	D	D	D	C
Approach Delay (s)		18.2			21.4			42.8			43.3	
Approach LOS		B			C			D			D	

Intersection Summary			
HCM Average Control Delay	27.9	HCM Level of Service	C
HCM Volume to Capacity ratio	0.59		
Actuated Cycle Length (s)	100.0	Sum of lost time (s)	12.0
Intersection Capacity Utilization	64.8%	ICU Level of Service	C
Analysis Period (min)	15		

c Critical Lane Group

Movement	EBL	EBT	EBR	WBL	WBT	WBR	NBL	NBT	NBR	SBL	SBT	SBR
Lane Configurations												
Volume (vph)	75	1005	70	160	1290	165	120	345	270	200	185	130
Ideal Flow (vphpl)	1900	1900	1900	1900	1900	1900	1900	1900	1900	1900	1900	1900
Total Lost time (s)	4.0	4.0	4.0	4.0	4.0	4.0	4.0	4.0	4.5	4.0	4.0	
Lane Util. Factor	1.00	0.95	1.00	1.00	0.95	1.00	1.00	0.95	1.00	1.00	0.95	
Frt	1.00	1.00	0.85	1.00	1.00	0.85	1.00	1.00	0.85	1.00	0.94	
Flt Protected	0.95	1.00	1.00	0.95	1.00	1.00	0.95	1.00	1.00	0.95	1.00	
Satd. Flow (prot)	1805	3539	1615	1736	3574	1615	1805	3610	1615	1805	3373	
Flt Permitted	0.95	1.00	1.00	0.95	1.00	1.00	0.95	1.00	1.00	0.95	1.00	
Satd. Flow (perm)	1805	3539	1615	1736	3574	1615	1805	3610	1615	1805	3373	
Peak-hour factor, PHF	1.00	1.00	1.00	1.00	1.00	1.00	1.00	1.00	1.00	1.00	1.00	1.00
Adj. Flow (vph)	75	1005	70	160	1290	165	120	345	270	200	185	130
RTOR Reduction (vph)	0	0	36	0	0	77	0	0	48	0	108	0
Lane Group Flow (vph)	75	1005	34	160	1290	88	120	345	222	200	207	0
Heavy Vehicles (%)	0%	2%	0%	4%	1%	0%	0%	0%	0%	0%	0%	1%
Turn Type	Prot		Perm	Prot		Perm	Prot		pt+ov	Prot		
Protected Phases	5	2		1	6		3	8	8 1	7	4	
Permitted Phases			2			6						
Actuated Green, G (s)	8.5	56.9	56.9	14.1	62.5	62.5	11.8	17.1	35.7	14.0	19.3	
Effective Green, g (s)	8.5	58.3	58.3	14.1	63.9	63.9	11.8	17.6	35.7	14.0	19.8	
Actuated g/C Ratio	0.07	0.49	0.49	0.12	0.53	0.53	0.10	0.15	0.30	0.12	0.17	
Clearance Time (s)	4.0	5.4	5.4	4.0	5.4	5.4	4.0	4.5		4.0	4.5	
Vehicle Extension (s)	2.3	4.4	4.4	2.3	4.4	4.4	2.3	2.3		2.3	2.3	
Lane Grp Cap (vph)	128	1719	785	204	1903	860	177	529	480	211	557	
v/s Ratio Prot	0.04	0.28		c0.09	c0.36		0.07	c0.10	0.14	c0.11	0.06	
v/s Ratio Perm			0.02			0.05						
v/c Ratio	0.59	0.58	0.04	0.78	0.68	0.10	0.68	0.65	0.46	0.95	0.37	
Uniform Delay, d1	54.0	22.2	16.2	51.5	20.5	13.9	52.3	48.3	34.3	52.6	44.6	
Progression Factor	1.00	1.00	1.00	0.84	0.79	1.18	1.00	1.00	1.00	1.00	1.00	
Incremental Delay, d2	5.1	1.5	0.1	10.0	1.1	0.1	8.5	2.4	0.4	46.7	0.2	
Delay (s)	59.1	23.6	16.3	53.2	17.3	16.5	60.8	50.7	34.8	99.3	44.8	
Level of Service	E	C	B	D	B	B	E	D	C	F	D	
Approach Delay (s)		25.5			20.8			46.5			66.0	
Approach LOS		C			C			D			E	

Intersection Summary			
HCM Average Control Delay	32.6	HCM Level of Service	C
HCM Volume to Capacity ratio	0.71		
Actuated Cycle Length (s)	120.0	Sum of lost time (s)	12.0
Intersection Capacity Utilization	73.8%	ICU Level of Service	D
Analysis Period (min)	15		

c Critical Lane Group

Movement	EBL	EBT	EBR	WBL	WBT	WBR	NBL	NBT	NBR	SBL	SBT	SBR
Lane Configurations												
Volume (veh/h)	0	0	345	0	0	15	0	720	15	0	155	260
Sign Control		Stop			Stop			Free			Free	
Grade		0%			0%			0%			0%	
Peak Hour Factor	1.00	1.00	1.00	1.00	1.00	1.00	1.00	1.00	1.00	1.00	1.00	1.00
Hourly flow rate (vph)	0	0	345	0	0	15	0	720	15	0	155	260
Pedestrians												
Lane Width (ft)												
Walking Speed (ft/s)												
Percent Blockage												
Right turn flare (veh)												
Median type								None			None	
Median storage veh)												
Upstream signal (ft)											280	
pX, platoon unblocked												
vC, conflicting volume	898	890	155	1228	1142	728	415			735		
vC1, stage 1 conf vol												
vC2, stage 2 conf vol												
vCu, unblocked vol	898	890	155	1228	1142	728	415			735		
tC, single (s)	7.1	6.5	6.2	7.1	6.5	6.2	4.1			4.1		
tC, 2 stage (s)												
tF (s)	3.5	4.0	3.3	3.5	4.0	3.3	2.2			2.2		
p0 queue free %	100	100	61	100	100	96	100			100		
cM capacity (veh/h)	253	284	896	96	202	427	1155			879		

Direction, Lane #	EB 1	WB 1	NB 1	SB 1	SB 2
Volume Total	345	15	735	155	260
Volume Left	0	0	0	0	0
Volume Right	345	15	15	0	260
cSH	896	427	1700	1700	1700
Volume to Capacity	0.39	0.04	0.43	0.09	0.15
Queue Length 95th (ft)	46	3	0	0	0
Control Delay (s)	11.5	13.7	0.0	0.0	0.0
Lane LOS	B	B			
Approach Delay (s)	11.5	13.7	0.0	0.0	
Approach LOS	B	B			

Intersection Summary			
Average Delay	2.8		
Intersection Capacity Utilization	48.8%	ICU Level of Service	A
Analysis Period (min)	15		

Movement	EBL	EBT	EBR	WBL	WBT	WBR	NBL	NBT	NBR	SBL	SBT	SBR
Lane Configurations												
Volume (vph)	275	1300	65	75	1365	25	75	60	155	115	65	105
Ideal Flow (vphpl)	1900	1900	1900	1900	1900	1900	1900	1900	1900	1900	1900	1900
Total Lost time (s)	4.0	4.0	4.0	4.0	4.0		4.0	4.0		4.0	4.0	
Lane Util. Factor	1.00	0.95	1.00	1.00	0.95		1.00	1.00		1.00	1.00	
Frt	1.00	1.00	0.85	1.00	1.00		1.00	0.89		1.00	0.91	
Flt Protected	0.95	1.00	1.00	0.95	1.00		0.95	1.00		0.95	1.00	
Satd. Flow (prot)	1703	3406	1495	1641	3430		1597	1420		1752	1697	
Flt Permitted	0.95	1.00	1.00	0.95	1.00		0.95	1.00		0.95	1.00	
Satd. Flow (perm)	1703	3406	1495	1641	3430		1597	1420		1752	1697	
Peak-hour factor, PHF	1.00	1.00	1.00	1.00	1.00	1.00	1.00	1.00	1.00	1.00	1.00	1.00
Adj. Flow (vph)	275	1300	65	75	1365	25	75	60	155	115	65	105
RTOR Reduction (vph)	0	0	17	0	1	0	0	89	0	0	52	0
Lane Group Flow (vph)	275	1300	48	75	1389	0	75	126	0	115	118	0
Heavy Vehicles (%)	6%	6%	8%	10%	5%	3%	13%	15%	21%	3%	1%	2%
Turn Type	Prot		Perm	Prot			Prot			Prot		
Protected Phases	5	2		1	6		3	8		7	4	
Permitted Phases			2									
Actuated Green, G (s)	15.0	64.7	64.7	9.8	59.5		9.3	16.7		10.9	18.3	
Effective Green, g (s)	15.0	66.1	66.1	9.8	60.9		9.3	17.2		10.9	18.8	
Actuated g/C Ratio	0.12	0.55	0.55	0.08	0.51		0.08	0.14		0.09	0.16	
Clearance Time (s)	4.0	5.4	5.4	4.0	5.4		4.0	4.5		4.0	4.5	
Vehicle Extension (s)	2.3	4.5	4.5	2.3	4.5		2.5	2.5		2.5	2.5	
Lane Grp Cap (vph)	213	1876	823	134	1741		124	204		159	266	
v/s Ratio Prot	c0.16	0.38		0.05	c0.40		0.05	c0.09		c0.07	0.07	
v/s Ratio Perm			0.03									
v/c Ratio	1.29	0.69	0.06	0.56	0.80		0.60	0.62		0.72	0.44	
Uniform Delay, d1	52.5	19.6	12.5	53.0	24.5		53.6	48.3		53.1	45.9	
Progression Factor	0.91	0.76	0.48	1.23	0.71		1.00	1.00		1.00	1.00	
Incremental Delay, d2	153.6	1.5	0.1	3.0	3.3		6.8	4.7		14.1	0.9	
Delay (s)	201.5	16.4	6.1	68.1	20.8		60.4	53.0		67.2	46.7	
Level of Service	F	B	A	E	C		E	D		E	D	
Approach Delay (s)		47.0			23.2			54.9			55.0	
Approach LOS		D			C			D			D	

Intersection Summary			
HCM Average Control Delay	38.8	HCM Level of Service	D
HCM Volume to Capacity ratio	0.83		
Actuated Cycle Length (s)	120.0	Sum of lost time (s)	16.0
Intersection Capacity Utilization	86.2%	ICU Level of Service	E
Analysis Period (min)	15		

c Critical Lane Group

Movement	EBL	EBT	EBR	WBL	WBT	WBR	NBL	NBT	NBR	SBL	SBT	SBR
Lane Configurations												
Volume (vph)	225	65	25	75	25	190	110	1080	155	75	600	100
Ideal Flow (vphpl)	1900	1900	1900	1900	1900	1900	1900	1900	1900	1900	1900	1900
Total Lost time (s)	4.0	4.0		4.0	4.0		4.0	4.0		4.0	4.0	
Lane Util. Factor	1.00	1.00		1.00	1.00		1.00	0.95		1.00	0.95	
Frt	1.00	0.96		1.00	0.87		1.00	0.98		1.00	0.98	
Flt Protected	0.95	1.00		0.95	1.00		0.95	1.00		0.95	1.00	
Satd. Flow (prot)	1770	1785		1770	1616		1770	3473		1770	3463	
Flt Permitted	0.26	1.00		0.70	1.00		0.29	1.00		0.12	1.00	
Satd. Flow (perm)	488	1785		1301	1616		547	3473		225	3463	
Peak-hour factor, PHF	1.00	1.00	1.00	1.00	1.00	1.00	1.00	1.00	1.00	1.00	1.00	1.00
Adj. Flow (vph)	225	65	25	75	25	190	110	1080	155	75	600	100
RTOR Reduction (vph)	0	12	0	0	156	0	0	10	0	0	12	0
Lane Group Flow (vph)	225	78	0	75	59	0	110	1225	0	75	688	0
Turn Type	pm+pt			pm+pt			pm+pt			pm+pt		
Protected Phases	3	8		7	4		1	6		5	2	
Permitted Phases	8			4			6			2		
Actuated Green, G (s)	27.8	19.3		15.3	11.3		38.0	32.6		38.0	32.6	
Effective Green, g (s)	28.3	19.8		16.3	11.8		39.0	33.1		39.0	33.1	
Actuated g/C Ratio	0.36	0.25		0.21	0.15		0.49	0.42		0.49	0.42	
Clearance Time (s)	4.5	4.5		4.5	4.5		4.5	4.5		4.5	4.5	
Vehicle Extension (s)	2.5	2.5		2.5	2.5		2.5	2.5		2.5	2.5	
Lane Grp Cap (vph)	376	446		294	240		360	1450		226	1445	
v/s Ratio Prot	c0.09	0.04		0.01	0.04		0.02	c0.35		c0.02	0.20	
v/s Ratio Perm	c0.12			0.04			0.13			0.14		
v/c Ratio	0.60	0.17		0.26	0.25		0.31	0.84		0.33	0.48	
Uniform Delay, d1	19.4	23.3		26.1	29.8		11.4	20.8		14.2	16.8	
Progression Factor	1.00	1.00		1.00	1.00		1.00	1.00		1.00	1.00	
Incremental Delay, d2	2.1	0.1		0.3	0.4		0.4	4.6		0.6	0.2	
Delay (s)	21.6	23.5		26.5	30.2		11.7	25.4		14.8	17.0	
Level of Service	C	C		C	C		B	C		B	B	
Approach Delay (s)		22.1			29.2			24.3			16.8	
Approach LOS		C			C			C			B	

Intersection Summary			
HCM Average Control Delay	22.4	HCM Level of Service	C
HCM Volume to Capacity ratio	0.69		
Actuated Cycle Length (s)	79.3	Sum of lost time (s)	12.0
Intersection Capacity Utilization	77.8%	ICU Level of Service	D
Analysis Period (min)	15		
c Critical Lane Group			

Movement	EBL	EBT	EBR	WBL	WBT	WBR	NBL	NBT	NBR	SBL	SBT	SBR
Lane Configurations												
Volume (vph)	50	1295	60	75	1210	110	120	130	105	80	25	35
Ideal Flow (vphpl)	1900	1900	1900	1900	1900	1900	1900	1900	1900	1900	1900	1900
Total Lost time (s)	4.0	4.0		4.0	4.0	4.0		4.0			4.0	4.0
Lane Util. Factor	1.00	0.95		1.00	0.95	1.00		1.00			1.00	1.00
Frt	1.00	0.99		1.00	1.00	0.85		0.96			1.00	0.85
Flt Protected	0.95	1.00		0.95	1.00	1.00		0.98			0.96	1.00
Satd. Flow (prot)	1805	3519		1770	3539	1568		1753			1763	1615
Flt Permitted	0.95	1.00		0.95	1.00	1.00		0.72			0.42	1.00
Satd. Flow (perm)	1805	3519		1770	3539	1568		1278			760	1615
Peak-hour factor, PHF	1.00	1.00	1.00	1.00	1.00	1.00	1.00	1.00	1.00	1.00	1.00	1.00
Adj. Flow (vph)	50	1295	60	75	1210	110	120	130	105	80	25	35
RTOR Reduction (vph)	0	2	0	0	0	11	0	13	0	0	0	30
Lane Group Flow (vph)	50	1353	0	75	1210	99	0	342	0	0	105	5
Heavy Vehicles (%)	0%	2%	0%	2%	2%	3%	0%	4%	3%	5%	0%	0%
Turn Type	Prot			Prot		Perm	Perm			Perm		Perm
Protected Phases	5	2		1	6			8			4	
Permitted Phases						6	8			4		4
Actuated Green, G (s)	7.1	81.8		8.8	83.5	83.5		16.0			14.8	14.8
Effective Green, g (s)	7.1	83.2		8.8	84.9	84.9		16.0			16.0	16.0
Actuated g/C Ratio	0.06	0.69		0.07	0.71	0.71		0.13			0.13	0.13
Clearance Time (s)	4.0	5.4		4.0	5.4	5.4		4.0			5.2	5.2
Vehicle Extension (s)	2.3	4.5		2.3	4.5	4.5		2.5			2.5	2.5
Lane Grp Cap (vph)	107	2440		130	2504	1109		170			101	215
v/s Ratio Prot	0.03	c0.38		0.04	c0.34							
v/s Ratio Perm						0.06		c0.27			0.14	0.00
v/c Ratio	0.47	0.55		0.58	0.48	0.09		2.01			1.04	0.02
Uniform Delay, d1	54.6	9.2		53.8	7.8	5.5		52.0			52.0	45.2
Progression Factor	0.96	1.02		1.25	1.66	1.28		1.00			1.00	1.00
Incremental Delay, d2	1.4	0.7		2.5	0.4	0.1		475.5			100.7	0.0
Delay (s)	54.0	10.0		70.0	13.3	7.1		527.5			152.7	45.2
Level of Service	D	B		E	B	A		F			F	D
Approach Delay (s)		11.6			15.9			527.5			125.8	
Approach LOS		B			B			F			F	

Intersection Summary			
HCM Average Control Delay	73.8	HCM Level of Service	E
HCM Volume to Capacity ratio	0.75		
Actuated Cycle Length (s)	120.0	Sum of lost time (s)	8.0
Intersection Capacity Utilization	78.4%	ICU Level of Service	D
Analysis Period (min)	15		

c Critical Lane Group

Movement	WBL	WBR	NBT	NBR	SBL	SBT
Lane Configurations						
Volume (veh/h)	45	200	625	145	145	185
Sign Control	Stop		Free			Free
Grade	0%		0%			0%
Peak Hour Factor	1.00	1.00	1.00	1.00	1.00	1.00
Hourly flow rate (vph)	45	200	625	145	145	185
Pedestrians						
Lane Width (ft)						
Walking Speed (ft/s)						
Percent Blockage						
Right turn flare (veh)						
Median type			None			None
Median storage veh)						
Upstream signal (ft)						1106
pX, platoon unblocked						
vC, conflicting volume	1172	698			770	
vC1, stage 1 conf vol						
vC2, stage 2 conf vol						
vCu, unblocked vol	1172	698			770	
tC, single (s)	6.4	6.2			4.1	
tC, 2 stage (s)						
tF (s)	3.5	3.3			2.2	
p0 queue free %	75	55			83	
cM capacity (veh/h)	178	444			854	

Direction, Lane #	WB 1	WB 2	NB 1	SB 1	SB 2
Volume Total	45	200	770	145	185
Volume Left	45	0	0	145	0
Volume Right	0	200	145	0	0
cSH	178	444	1700	854	1700
Volume to Capacity	0.25	0.45	0.45	0.17	0.11
Queue Length 95th (ft)	24	57	0	15	0
Control Delay (s)	31.9	19.6	0.0	10.1	0.0
Lane LOS	D	C		B	
Approach Delay (s)	21.8		0.0	4.4	
Approach LOS	C				

Intersection Summary			
Average Delay	5.1		
Intersection Capacity Utilization	64.3%	ICU Level of Service	C
Analysis Period (min)	15		

Movement	EBL	EBT	EBR	WBL	WBT	WBR	NBL	NBT	NBR	SBL	SBT	SBR
Lane Configurations												
Volume (vph)	175	345	65	115	300	285	135	850	70	135	315	125
Ideal Flow (vphpl)	1900	1900	1900	1900	1900	1900	1900	1900	1900	1900	1900	1900
Total Lost time (s)	4.0	4.0		4.0	4.0		4.0	4.0		4.0	4.0	
Lane Util. Factor	1.00	1.00		1.00	1.00		1.00	0.95		1.00	0.95	
Frt	1.00	0.98		1.00	0.93		1.00	0.99		1.00	0.96	
Flt Protected	0.95	1.00		0.95	1.00		0.95	1.00		0.95	1.00	
Satd. Flow (prot)	1805	1855		1805	1761		1805	3569		1805	3456	
Flt Permitted	0.95	1.00		0.95	1.00		0.40	1.00		0.10	1.00	
Satd. Flow (perm)	1805	1855		1805	1761		752	3569		187	3456	
Peak-hour factor, PHF	1.00	1.00	1.00	1.00	1.00	1.00	1.00	1.00	1.00	1.00	1.00	1.00
Adj. Flow (vph)	175	345	65	115	300	285	135	850	70	135	315	125
RTOR Reduction (vph)	0	5	0	0	24	0	0	4	0	0	30	0
Lane Group Flow (vph)	175	405	0	115	561	0	135	916	0	135	410	0
Heavy Vehicles (%)	0%	0%	0%	0%	0%	0%	0%	0%	0%	0%	0%	0%
Turn Type	Prot			Prot			pm+pt			pm+pt		
Protected Phases	3	8		7	4		1	6		5	2	
Permitted Phases							6			2		
Actuated Green, G (s)	14.3	51.0		10.8	47.5		46.3	38.5		48.5	39.6	
Effective Green, g (s)	15.3	52.4		11.8	48.9		48.3	40.0		50.5	41.1	
Actuated g/C Ratio	0.12	0.40		0.09	0.38		0.37	0.31		0.39	0.32	
Clearance Time (s)	5.0	5.4		5.0	5.4		5.0	5.5		5.0	5.5	
Vehicle Extension (s)	0.2	5.0		0.2	8.0		0.2	5.0		0.2	5.0	
Lane Grp Cap (vph)	212	747		164	662		350	1097		196	1092	
v/s Ratio Prot	c0.10	c0.22		0.06	c0.32		0.03	c0.26		c0.05	0.12	
v/s Ratio Perm							0.12			0.22		
v/c Ratio	0.83	0.54		0.70	0.85		0.39	0.83		0.69	0.38	
Uniform Delay, d1	56.1	29.7		57.4	37.2		28.1	42.0		30.6	34.5	
Progression Factor	1.00	1.00		1.00	1.00		1.00	1.00		1.00	1.00	
Incremental Delay, d2	21.3	1.4		10.5	12.1		0.3	6.2		7.8	0.5	
Delay (s)	77.4	31.1		68.0	49.3		28.3	48.2		38.4	35.0	
Level of Service	E	C		E	D		C	D		D	C	
Approach Delay (s)		45.0			52.4			45.7			35.8	
Approach LOS		D			D			D			D	

Intersection Summary			
HCM Average Control Delay	45.2	HCM Level of Service	D
HCM Volume to Capacity ratio	0.85		
Actuated Cycle Length (s)	130.1	Sum of lost time (s)	20.0
Intersection Capacity Utilization	89.4%	ICU Level of Service	E
Analysis Period (min)	15		

c Critical Lane Group

Movement	EBL	EBT	WBT	WBR	SBL	SBR
Lane Configurations						
Volume (vph)	180	1230	1175	690	530	190
Ideal Flow (vphpl)	1900	1900	1900	1900	1900	1900
Total Lost time (s)	4.0	4.0	4.0		4.0	5.0
Lane Util. Factor	1.00	0.95	0.95		0.97	1.00
Frt	1.00	1.00	0.94		1.00	0.85
Flt Protected	0.95	1.00	1.00		0.95	1.00
Satd. Flow (prot)	1671	3610	3364		3433	1583
Flt Permitted	0.95	1.00	1.00		0.95	1.00
Satd. Flow (perm)	1671	3610	3364		3433	1583
Peak-hour factor, PHF	1.00	1.00	1.00	1.00	1.00	1.00
Adj. Flow (vph)	180	1230	1175	690	530	190
RTOR Reduction (vph)	0	0	65	0	0	41
Lane Group Flow (vph)	180	1230	1800	0	530	149
Heavy Vehicles (%)	8%	0%	1%	2%	2%	2%
Turn Type	Prot					custom
Protected Phases	5	2	6		7	4 5
Permitted Phases						
Actuated Green, G (s)	14.9	88.1	69.2		22.5	41.4
Effective Green, g (s)	14.9	89.5	70.6		22.5	41.4
Actuated g/C Ratio	0.12	0.75	0.59		0.19	0.34
Clearance Time (s)	4.0	5.4	5.4		4.0	
Vehicle Extension (s)	2.3	4.5	4.5		2.3	
Lane Grp Cap (vph)	207	2692	1979		644	546
v/s Ratio Prot	c0.11	0.34	c0.54		c0.15	0.09
v/s Ratio Perm						
v/c Ratio	0.87	0.46	0.91		0.82	0.27
Uniform Delay, d1	51.6	5.9	21.9		46.8	28.4
Progression Factor	0.92	0.66	0.94		1.00	1.00
Incremental Delay, d2	23.1	0.4	4.6		8.1	0.2
Delay (s)	70.7	4.3	25.2		55.0	28.6
Level of Service	E	A	C		D	C
Approach Delay (s)		12.8	25.2		48.0	
Approach LOS		B	C		D	

Intersection Summary			
HCM Average Control Delay	24.9	HCM Level of Service	C
HCM Volume to Capacity ratio	0.89		
Actuated Cycle Length (s)	120.0	Sum of lost time (s)	12.0
Intersection Capacity Utilization	89.7%	ICU Level of Service	E
Analysis Period (min)	15		

c Critical Lane Group

Movement	EBL	EBT	EBR	WBL	WBT	WBR	NBL	NBT	NBR	SBL	SBT	SBR
Lane Configurations												
Volume (vph)	80	95	145	290	65	160	150	675	80	20	295	40
Ideal Flow (vphpl)	1900	1900	1900	1900	1900	1900	1900	1900	1900	1900	1900	1900
Total Lost time (s)	4.0	4.0		4.0	4.0		4.0	4.0		4.0	4.0	
Lane Util. Factor	1.00	1.00		1.00	1.00		1.00	0.95		1.00	0.95	
Frt	1.00	0.91		1.00	0.89		1.00	0.98		1.00	0.98	
Flt Protected	0.95	1.00		0.95	1.00		0.95	1.00		0.95	1.00	
Satd. Flow (prot)	1770	1694		1770	1664		1770	3483		1770	3476	
Flt Permitted	0.62	1.00		0.31	1.00		0.38	1.00		0.33	1.00	
Satd. Flow (perm)	1151	1694		577	1664		712	3483		616	3476	
Peak-hour factor, PHF	1.00	1.00	1.00	1.00	1.00	1.00	1.00	1.00	1.00	1.00	1.00	1.00
Adj. Flow (vph)	80	95	145	290	65	160	150	675	80	20	295	40
RTOR Reduction (vph)	0	48	0	0	80	0	0	8	0	0	10	0
Lane Group Flow (vph)	80	192	0	290	145	0	150	747	0	20	325	0
Turn Type	pm+pt			pm+pt			pm+pt			pm+pt		
Protected Phases	3	8		7	4		1	6		5	2	
Permitted Phases	8			4			6			2		
Actuated Green, G (s)	18.4	13.8		34.0	25.4		28.7	23.5		16.8	15.6	
Effective Green, g (s)	18.4	13.8		34.0	25.4		28.7	23.5		16.8	15.6	
Actuated g/C Ratio	0.26	0.20		0.48	0.36		0.41	0.33		0.24	0.22	
Clearance Time (s)	4.0	4.0		4.0	4.0		4.0	4.0		4.0	4.0	
Vehicle Extension (s)	2.5	2.5		2.5	2.5		2.5	2.5		2.5	2.5	
Lane Grp Cap (vph)	340	331		551	598		425	1158		166	767	
v/s Ratio Prot	0.02	0.11		c0.12	0.09		c0.05	c0.21		0.00	0.09	
v/s Ratio Perm	0.05			c0.13			0.10			0.03		
v/c Ratio	0.24	0.58		0.53	0.24		0.35	0.65		0.12	0.42	
Uniform Delay, d1	20.3	25.8		12.1	15.9		13.9	20.1		20.8	23.7	
Progression Factor	1.00	1.00		1.00	1.00		1.00	1.00		1.00	1.00	
Incremental Delay, d2	0.3	2.0		0.7	0.2		0.4	1.1		0.2	0.3	
Delay (s)	20.5	27.8		12.8	16.1		14.3	21.2		21.0	24.0	
Level of Service	C	C		B	B		B	C		C	C	
Approach Delay (s)		26.0			14.2			20.0			23.8	
Approach LOS		C			B			C			C	

Intersection Summary			
HCM Average Control Delay	20.1	HCM Level of Service	C
HCM Volume to Capacity ratio	0.57		
Actuated Cycle Length (s)	70.7	Sum of lost time (s)	12.0
Intersection Capacity Utilization	67.8%	ICU Level of Service	C
Analysis Period (min)	15		
c Critical Lane Group			

Movement	EBL	EBT	EBR	WBL	WBT	WBR	NBL	NBT	NBR	SBL	SBT	SBR
Lane Configurations												
Volume (vph)	10	1465	260	65	1295	25	520	360	90	40	100	15
Ideal Flow (vphpl)	1900	1900	1900	1900	1900	1900	1900	1900	1900	1900	1900	1900
Total Lost time (s)	4.0	4.0	3.3	4.0	4.0	4.0	4.0	4.0		4.0	4.0	
Lane Util. Factor	1.00	0.95	1.00	1.00	0.95	1.00	1.00	1.00		1.00	1.00	
Frt	1.00	1.00	0.85	1.00	1.00	0.85	1.00	0.97		1.00	0.98	
Flt Protected	0.95	1.00	1.00	0.95	1.00	1.00	0.95	1.00		0.95	1.00	
Satd. Flow (prot)	1641	3438	1495	1671	3438	1615	1703	1782		1752	1730	
Flt Permitted	0.95	1.00	1.00	0.95	1.00	1.00	0.52	1.00		0.18	1.00	
Satd. Flow (perm)	1641	3438	1495	1671	3438	1615	928	1782		337	1730	
Peak-hour factor, PHF	1.00	1.00	1.00	1.00	1.00	1.00	1.00	1.00	1.00	1.00	1.00	1.00
Adj. Flow (vph)	10	1465	260	65	1295	25	520	360	90	40	100	15
RTOR Reduction (vph)	0	0	84	0	0	5	0	8	0	0	5	0
Lane Group Flow (vph)	10	1465	176	65	1295	20	520	442	0	40	110	0
Heavy Vehicles (%)	10%	5%	8%	8%	5%	0%	6%	2%	9%	3%	7%	12%
Turn Type	Prot		pm+ov	Prot		Perm	pm+pt			pm+pt		
Protected Phases	5	2	3	1	6		3	8		7	4	
Permitted Phases			2			6	8			4		
Actuated Green, G (s)	0.8	56.0	70.0	9.6	64.8	64.8	41.2	33.2		27.2	23.2	
Effective Green, g (s)	0.8	56.7	71.4	9.6	65.5	65.5	41.2	33.7		27.2	23.7	
Actuated g/C Ratio	0.01	0.47	0.60	0.08	0.55	0.55	0.34	0.28		0.23	0.20	
Clearance Time (s)	4.0	4.7	4.0	4.0	4.7	4.7	4.0	4.5		4.0	4.5	
Vehicle Extension (s)	2.3	4.5	2.5	2.3	4.5	4.5	2.5	2.5		2.5	2.5	
Lane Grp Cap (vph)	11	1624	890	134	1877	882	409	500		124	342	
v/s Ratio Prot	0.01	c0.43	0.02	0.04	c0.38		c0.15	0.25		0.01	0.06	
v/s Ratio Perm			0.09			0.01	c0.29			0.06		
v/c Ratio	0.91	0.90	0.20	0.49	0.69	0.02	1.27	0.88		0.32	0.32	
Uniform Delay, d1	59.6	29.1	11.2	52.8	19.9	12.5	38.1	41.3		37.7	41.3	
Progression Factor	1.00	1.45	2.73	1.02	1.11	1.10	1.00	1.00		1.00	1.00	
Incremental Delay, d2	198.8	7.5	0.1	1.4	1.8	0.0	140.1	16.7		1.1	0.4	
Delay (s)	258.5	49.6	30.6	55.2	23.9	13.9	178.2	58.0		38.8	41.7	
Level of Service	F	D	C	E	C	B	F	E		D	D	
Approach Delay (s)		47.9			25.2			122.4			40.9	
Approach LOS		D			C			F			D	

Intersection Summary			
HCM Average Control Delay	57.3	HCM Level of Service	E
HCM Volume to Capacity ratio	0.99		
Actuated Cycle Length (s)	120.0	Sum of lost time (s)	8.0
Intersection Capacity Utilization	89.6%	ICU Level of Service	E
Analysis Period (min)	15		

c Critical Lane Group

Movement	EBL	EBT	EBR	WBL	WBT	WBR	NBL	NBT	NBR	SBL	SBT	SBR
Lane Configurations												
Volume (vph)	180	20	150	10	55	300	160	560	75	280	140	135
Ideal Flow (vphpl)	1900	1900	1900	1900	1900	1900	1900	1900	1900	1900	1900	1900
Total Lost time (s)	4.5	4.5		4.5	4.5		4.5	4.5		4.5	4.5	4.5
Lane Util. Factor	1.00	1.00		1.00	1.00		1.00	1.00		1.00	1.00	1.00
Frt	1.00	0.87		1.00	0.87		1.00	0.98		1.00	1.00	0.85
Flt Protected	0.95	1.00		0.95	1.00		0.95	1.00		0.95	1.00	1.00
Satd. Flow (prot)	1770	1616		1770	1627		1770	1830		1770	1863	1583
Flt Permitted	0.17	1.00		0.65	1.00		0.67	1.00		0.10	1.00	1.00
Satd. Flow (perm)	325	1616		1210	1627		1244	1830		179	1863	1583
Peak-hour factor, PHF	1.00	1.00	1.00	1.00	1.00	1.00	1.00	1.00	1.00	1.00	1.00	1.00
Adj. Flow (vph)	180	20	150	10	55	300	160	560	75	280	140	135
RTOR Reduction (vph)	0	106	0	0	163	0	0	4	0	0	0	73
Lane Group Flow (vph)	180	64	0	10	192	0	160	631	0	280	140	62
Turn Type	pm+pt			pm+pt			pm+pt			pm+pt		Perm
Protected Phases	3	8		7	4		1	6		5	2	
Permitted Phases	8			4			6			2		2
Actuated Green, G (s)	34.5	29.8		19.6	18.9		44.9	37.7		58.4	47.2	47.2
Effective Green, g (s)	34.0	29.3		18.6	18.4		43.9	37.2		57.9	46.7	46.7
Actuated g/C Ratio	0.34	0.29		0.18	0.18		0.44	0.37		0.57	0.46	0.46
Clearance Time (s)	4.0	4.0		4.0	4.0		4.0	4.0		4.0	4.0	4.0
Vehicle Extension (s)	2.5	2.5		2.5	2.5		2.5	2.5		2.5	2.5	2.5
Lane Grp Cap (vph)	268	469		224	297		576	675		358	862	733
v/s Ratio Prot	c0.07	0.04		0.00	0.12		0.02	c0.34		c0.13	0.08	
v/s Ratio Perm	c0.15			0.01			0.10			0.32		0.04
v/c Ratio	0.67	0.14		0.04	0.65		0.28	0.93		0.78	0.16	0.09
Uniform Delay, d1	26.6	26.4		33.8	38.2		17.7	30.7		26.4	15.7	15.2
Progression Factor	1.00	1.00		1.00	1.00		1.00	1.00		1.00	1.00	1.00
Incremental Delay, d2	5.9	0.1		0.1	4.2		0.2	20.0		10.3	0.1	0.0
Delay (s)	32.5	26.5		33.8	42.5		17.9	50.7		36.7	15.8	15.2
Level of Service	C	C		C	D		B	D		D	B	B
Approach Delay (s)		29.6			42.3			44.1			26.2	
Approach LOS		C			D			D			C	

Intersection Summary			
HCM Average Control Delay	36.5	HCM Level of Service	D
HCM Volume to Capacity ratio	0.79		
Actuated Cycle Length (s)	100.9	Sum of lost time (s)	13.5
Intersection Capacity Utilization	95.9%	ICU Level of Service	F
Analysis Period (min)	15		
c Critical Lane Group			

Movement	EBL	EBT	EBR	WBL	WBT	WBR	NBL	NBT	NBR	SBL	SBT	SBR
Lane Configurations												
Volume (vph)	35	1300	165	175	1020	120	275	440	330	210	165	45
Ideal Flow (vphpl)	1900	1900	1900	1900	1900	1900	1900	1900	1900	1900	1900	1900
Total Lost time (s)	4.0	4.0	4.0	4.0	4.0	4.0	4.0	4.0	4.0	4.0	4.0	
Lane Util. Factor	1.00	0.95	1.00	1.00	0.95	1.00	1.00	1.00	1.00	1.00	1.00	
Frt	1.00	1.00	0.85	1.00	1.00	0.85	1.00	1.00	0.85	1.00	0.97	
Flt Protected	0.95	1.00	1.00	0.95	1.00	1.00	0.95	1.00	1.00	0.95	1.00	
Satd. Flow (prot)	1805	3574	1615	1805	3539	1615	1787	1900	1615	1805	1810	
Flt Permitted	0.95	1.00	1.00	0.95	1.00	1.00	0.95	1.00	1.00	0.95	1.00	
Satd. Flow (perm)	1805	3574	1615	1805	3539	1615	1787	1900	1615	1805	1810	
Peak-hour factor, PHF	1.00	1.00	1.00	1.00	1.00	1.00	1.00	1.00	1.00	1.00	1.00	1.00
Adj. Flow (vph)	35	1300	165	175	1020	120	275	440	330	210	165	45
RTOR Reduction (vph)	0	0	67	0	0	32	0	0	155	0	9	0
Lane Group Flow (vph)	35	1300	98	175	1020	88	275	440	175	210	201	0
Heavy Vehicles (%)	0%	1%	0%	0%	2%	0%	1%	0%	0%	0%	2%	0%
Turn Type	Prot		Perm	Prot		Perm	Prot		Perm	Prot		
Protected Phases	5	2		1	6		7	4		3	8	
Permitted Phases			2			6			4			
Actuated Green, G (s)	3.6	44.6	44.6	14.2	55.2	55.2	26.3	28.3	28.3	15.0	17.0	
Effective Green, g (s)	3.6	46.0	46.0	14.2	56.6	56.6	26.3	28.8	28.8	15.0	17.5	
Actuated g/C Ratio	0.03	0.38	0.38	0.12	0.47	0.47	0.22	0.24	0.24	0.12	0.15	
Clearance Time (s)	4.0	5.4	5.4	4.0	5.4	5.4	4.0	4.5	4.5	4.0	4.5	
Vehicle Extension (s)	2.3	4.5	4.5	2.3	4.5	4.5	2.3	2.3	2.3	2.3	2.3	
Lane Grp Cap (vph)	54	1370	619	214	1669	762	392	456	388	226	264	
v/s Ratio Prot	0.02	c0.36		c0.10	0.29		0.15	c0.23		c0.12	0.11	
v/s Ratio Perm			0.06			0.05			0.11			
v/c Ratio	0.65	0.95	0.16	0.82	0.61	0.12	0.70	0.96	0.45	0.93	0.76	
Uniform Delay, d1	57.6	35.9	24.3	51.6	23.5	17.7	43.2	45.1	38.9	52.0	49.3	
Progression Factor	1.41	0.39	0.20	1.00	1.00	1.00	1.00	1.00	1.00	1.00	1.00	
Incremental Delay, d2	16.2	12.5	0.4	20.3	1.7	0.3	5.0	32.9	0.5	40.1	11.5	
Delay (s)	97.2	26.5	5.2	71.9	25.2	18.0	48.2	78.0	39.3	92.0	60.8	
Level of Service	F	C	A	E	C	B	D	E	D	F	E	
Approach Delay (s)		25.8			30.8			57.9			76.4	
Approach LOS		C			C			E			E	

Intersection Summary			
HCM Average Control Delay	40.1	HCM Level of Service	D
HCM Volume to Capacity ratio	0.93		
Actuated Cycle Length (s)	120.0	Sum of lost time (s)	16.0
Intersection Capacity Utilization	93.8%	ICU Level of Service	F
Analysis Period (min)	15		

c Critical Lane Group

Movement	EBL	EBT	EBR	WBL	WBT	WBR	NBL	NBT	NBR	SBL	SBT	SBR
Lane Configurations												
Volume (vph)	175	1535	170	120	960	135	325	1010	160	185	485	125
Ideal Flow (vphpl)	1900	1900	1900	1900	1900	1900	1900	1900	1900	1900	1900	1900
Total Lost time (s)	4.0	4.0	3.5	4.0	4.0		4.0	4.0	4.0	4.0	4.0	3.0
Lane Util. Factor	0.97	0.95	1.00	0.97	0.95		0.97	0.95	1.00	0.97	0.95	1.00
Frt	1.00	1.00	0.85	1.00	0.98		1.00	1.00	0.85	1.00	1.00	0.85
Flt Protected	0.95	1.00	1.00	0.95	1.00		0.95	1.00	1.00	0.95	1.00	1.00
Satd. Flow (prot)	3467	3610	1615	3502	3512		3502	3610	1615	3502	3574	1615
Flt Permitted	0.95	1.00	1.00	0.95	1.00		0.95	1.00	1.00	0.95	1.00	1.00
Satd. Flow (perm)	3467	3610	1615	3502	3512		3502	3610	1615	3502	3574	1615
Peak-hour factor, PHF	1.00	1.00	1.00	1.00	1.00	1.00	1.00	1.00	1.00	1.00	1.00	1.00
Adj. Flow (vph)	175	1535	170	120	960	135	325	1010	160	185	485	125
RTOR Reduction (vph)	0	0	16	0	9	0	0	0	8	0	0	39
Lane Group Flow (vph)	175	1535	154	120	1086	0	325	1010	152	185	485	86
Heavy Vehicles (%)	1%	0%	0%	0%	1%	0%	0%	0%	0%	0%	1%	0%
Turn Type	Prot		pm+ov	Prot			Prot		pm+ov	Prot		pm+ov
Protected Phases	5	2	3	1	6		3	8	1	7	4	5
Permitted Phases			2						8			4
Actuated Green, G (s)	9.6	55.1	70.7	5.7	51.2		15.6	34.7	40.4	7.7	26.8	36.4
Effective Green, g (s)	9.1	55.6	70.7	5.2	51.7		15.1	35.2	39.4	7.2	27.3	37.4
Actuated g/C Ratio	0.08	0.47	0.59	0.04	0.43		0.13	0.30	0.33	0.06	0.23	0.31
Clearance Time (s)	3.5	4.5	3.5	3.5	4.5		3.5	4.5	3.5	3.5	4.5	3.5
Vehicle Extension (s)	2.3	4.3	2.3	2.3	4.3		2.3	2.3	2.3	2.3	2.3	2.3
Lane Grp Cap (vph)	265	1684	958	153	1523		444	1066	534	212	819	507
v/s Ratio Prot	c0.05	c0.43	0.02	0.03	0.31		c0.09	c0.28	0.01	0.05	0.14	0.01
v/s Ratio Perm			0.07						0.08			0.04
v/c Ratio	0.66	0.91	0.16	0.78	0.71		0.73	0.95	0.28	0.87	0.59	0.17
Uniform Delay, d1	53.5	29.5	10.9	56.4	27.7		50.1	41.1	29.5	55.5	41.0	29.6
Progression Factor	1.00	1.00	1.00	1.00	1.00		1.00	1.00	1.00	1.00	1.00	1.00
Incremental Delay, d2	5.2	9.0	0.0	21.6	2.9		5.6	16.2	0.2	29.8	0.9	0.1
Delay (s)	58.7	38.5	11.0	78.0	30.5		55.7	57.3	29.7	85.3	41.9	29.7
Level of Service	E	D	B	E	C		E	E	C	F	D	C
Approach Delay (s)		37.9			35.2			54.0			50.1	
Approach LOS		D			D			D			D	

Intersection Summary			
HCM Average Control Delay	43.6	HCM Level of Service	D
HCM Volume to Capacity ratio	0.92		
Actuated Cycle Length (s)	119.2	Sum of lost time (s)	16.0
Intersection Capacity Utilization	92.4%	ICU Level of Service	F
Analysis Period (min)	15		

c Critical Lane Group

Movement	WBL	WBR	NBT	NBR	SBL	SBT
Lane Configurations						
Volume (veh/h)	10	140	830	30	35	390
Sign Control	Stop		Free			Free
Grade	0%		0%			0%
Peak Hour Factor	1.00	1.00	1.00	1.00	1.00	1.00
Hourly flow rate (vph)	10	140	830	30	35	390
Pedestrians						
Lane Width (ft)						
Walking Speed (ft/s)						
Percent Blockage						
Right turn flare (veh)						
Median type			None			None
Median storage veh)						
Upstream signal (ft)						
pX, platoon unblocked						
vC, conflicting volume	1305	845			860	
vC1, stage 1 conf vol						
vC2, stage 2 conf vol						
vCu, unblocked vol	1305	845			860	
tC, single (s)	6.4	6.2			4.1	
tC, 2 stage (s)						
tF (s)	3.5	3.3			2.2	
p0 queue free %	94	62			96	
cM capacity (veh/h)	171	366			790	

Direction, Lane #	WB 1	NB 1	SB 1	SB 2
Volume Total	150	860	35	390
Volume Left	10	0	35	0
Volume Right	140	30	0	0
cSH	340	1700	790	1700
Volume to Capacity	0.44	0.51	0.04	0.23
Queue Length 95th (ft)	54	0	3	0
Control Delay (s)	23.7	0.0	9.8	0.0
Lane LOS	C		A	
Approach Delay (s)	23.7	0.0	0.8	
Approach LOS	C			

Intersection Summary			
Average Delay	2.7		
Intersection Capacity Utilization	61.4%	ICU Level of Service	B
Analysis Period (min)	15		

Movement	WBL	WBR	NBT	NBR	SBL	SBT
Lane Configurations						
Volume (veh/h)	30	165	695	20	5	400
Sign Control	Stop		Free			Free
Grade	0%		0%			0%
Peak Hour Factor	1.00	1.00	1.00	1.00	1.00	1.00
Hourly flow rate (vph)	30	165	695	20	5	400
Pedestrians						
Lane Width (ft)						
Walking Speed (ft/s)						
Percent Blockage						
Right turn flare (veh)						
Median type			None			None
Median storage veh)						
Upstream signal (ft)						
pX, platoon unblocked						
vC, conflicting volume	1115	705			715	
vC1, stage 1 conf vol						
vC2, stage 2 conf vol						
vCu, unblocked vol	1115	705			715	
tC, single (s)	6.4	6.2			4.1	
tC, 2 stage (s)						
tF (s)	3.5	3.3			2.2	
p0 queue free %	87	62			99	
cM capacity (veh/h)	231	440			895	

Direction, Lane #	WB 1	WB 2	NB 1	SB 1	SB 2
Volume Total	30	165	715	5	400
Volume Left	30	0	0	5	0
Volume Right	0	165	20	0	0
cSH	231	440	1700	895	1700
Volume to Capacity	0.13	0.38	0.42	0.01	0.24
Queue Length 95th (ft)	11	43	0	0	0
Control Delay (s)	22.9	18.0	0.0	9.0	0.0
Lane LOS	C	C		A	
Approach Delay (s)	18.8		0.0	0.1	
Approach LOS	C				

Intersection Summary			
Average Delay	2.8		
Intersection Capacity Utilization	55.1%	ICU Level of Service	B
Analysis Period (min)	15		

Movement	WBL	WBR	NBT	NBR	SBL	SBT
Lane Configurations						
Volume (veh/h)	60	185	530	10	70	360
Sign Control	Stop		Free			Free
Grade	0%		0%			0%
Peak Hour Factor	1.00	1.00	1.00	1.00	1.00	1.00
Hourly flow rate (vph)	60	185	530	10	70	360
Pedestrians						
Lane Width (ft)						
Walking Speed (ft/s)						
Percent Blockage						
Right turn flare (veh)						
Median type			TWLTL			TWLTL
Median storage veh)			2			2
Upstream signal (ft)						
pX, platoon unblocked						
vC, conflicting volume	1035	535			540	
vC1, stage 1 conf vol	535					
vC2, stage 2 conf vol	500					
vCu, unblocked vol	1035	535			540	
tC, single (s)	6.4	6.2			4.1	
tC, 2 stage (s)	5.4					
tF (s)	3.5	3.3			2.2	
p0 queue free %	87	66			93	
cM capacity (veh/h)	455	547			1034	

Direction, Lane #	WB 1	NB 1	SB 1	SB 2
Volume Total	245	540	70	360
Volume Left	60	0	70	0
Volume Right	185	10	0	0
cSH	521	1700	1034	1700
Volume to Capacity	0.47	0.32	0.07	0.21
Queue Length 95th (ft)	62	0	5	0
Control Delay (s)	17.9	0.0	8.7	0.0
Lane LOS	C		A	
Approach Delay (s)	17.9	0.0	1.4	
Approach LOS	C			

Intersection Summary			
Average Delay	4.1		
Intersection Capacity Utilization	57.5%	ICU Level of Service	B
Analysis Period (min)	15		

Movement	EBL	EBT	EBR	WBL	WBT	WBR	NBL	NBT	NBR	SBL	SBT	SBR
Lane Configurations												
Volume (veh/h)	20	10	95	5	15	15	340	520	5	15	280	125
Sign Control		Stop			Stop			Free			Free	
Grade		0%			0%			0%			0%	
Peak Hour Factor	1.00	1.00	1.00	1.00	1.00	1.00	1.00	1.00	1.00	1.00	1.00	1.00
Hourly flow rate (vph)	20	10	95	5	15	15	340	520	5	15	280	125
Pedestrians												
Lane Width (ft)												
Walking Speed (ft/s)												
Percent Blockage												
Right turn flare (veh)			6									
Median type								None			TWLTL	
Median storage veh)											2	
Upstream signal (ft)								1262				
pX, platoon unblocked												
vC, conflicting volume	1595	1578	342	1565	1638	522	405			525		
vC1, stage 1 conf vol	372	372		1202	1202							
vC2, stage 2 conf vol	1222	1205		362	435							
vCu, unblocked vol	1595	1578	342	1565	1638	522	405			525		
tC, single (s)	7.1	6.5	6.2	7.1	6.5	6.2	4.1			4.1		
tC, 2 stage (s)	6.1	5.5		6.1	5.5							
tF (s)	3.5	4.0	3.3	3.5	4.0	3.3	2.2			2.2		
p0 queue free %	84	94	87	96	90	97	71			99		
cM capacity (veh/h)	122	162	705	136	155	558	1165			1052		

Direction, Lane #	EB 1	WB 1	NB 1	NB 2	SB 1	SB 2
Volume Total	125	35	340	525	15	405
Volume Left	20	5	340	0	15	0
Volume Right	95	15	0	5	0	125
cSH	563	219	1165	1700	1052	1700
Volume to Capacity	0.22	0.16	0.29	0.31	0.01	0.24
Queue Length 95th (ft)	21	14	31	0	1	0
Control Delay (s)	17.7	24.6	9.4	0.0	8.5	0.0
Lane LOS	C	C	A		A	
Approach Delay (s)	17.7	24.6	3.7		0.3	
Approach LOS	C	C				

Intersection Summary			
Average Delay	4.4		
Intersection Capacity Utilization	57.4%	ICU Level of Service	B
Analysis Period (min)	15		

Movement	EBL	EBT	EBR	WBL	WBT	WBR	NBL	NBT	NBR	SBL	SBT	SBR
Lane Configurations												
Volume (vph)	115	375	10	25	240	245	25	505	150	160	120	100
Ideal Flow (vphpl)	1900	1900	1900	1900	1900	1900	1900	1900	1900	1900	1900	1900
Total Lost time (s)	4.0	4.0		4.0	4.0	4.0	4.0	4.0		4.0	4.0	
Lane Util. Factor	1.00	1.00		1.00	1.00	1.00	1.00	1.00		1.00	1.00	
Frt	1.00	1.00		1.00	1.00	0.85	1.00	0.97		1.00	0.93	
Flt Protected	0.95	1.00		0.95	1.00	1.00	0.95	1.00		0.95	1.00	
Satd. Flow (prot)	1805	1893		1805	1900	1615	1805	1835		1805	1770	
Flt Permitted	0.95	1.00		0.95	1.00	1.00	0.95	1.00		0.95	1.00	
Satd. Flow (perm)	1805	1893		1805	1900	1615	1805	1835		1805	1770	
Peak-hour factor, PHF	1.00	1.00	1.00	1.00	1.00	1.00	1.00	1.00	1.00	1.00	1.00	1.00
Adj. Flow (vph)	115	375	10	25	240	245	25	505	150	160	120	100
RTOR Reduction (vph)	0	1	0	0	0	193	0	11	0	0	28	0
Lane Group Flow (vph)	115	384	0	25	240	52	25	644	0	160	192	0
Heavy Vehicles (%)	0%	0%	0%	0%	0%	0%	0%	0%	0%	0%	0%	0%
Turn Type	Prot			Prot		Perm	Prot			Prot		
Protected Phases	5	2		1	6		3	8		7	4	
Permitted Phases						6						
Actuated Green, G (s)	7.7	24.4		1.8	18.5	18.5	1.8	37.6		9.1	44.9	
Effective Green, g (s)	9.7	26.4		3.8	20.5	20.5	3.8	39.6		11.1	46.9	
Actuated g/C Ratio	0.10	0.27		0.04	0.21	0.21	0.04	0.41		0.11	0.48	
Clearance Time (s)	6.0	6.0		6.0	6.0	6.0	6.0	6.0		6.0	6.0	
Vehicle Extension (s)	2.4	2.7		2.7	2.7	2.7	2.6	2.5		2.6	2.5	
Lane Grp Cap (vph)	181	516		71	402	342	71	750		207	857	
v/s Ratio Prot	c0.06	c0.20		0.01	0.13		0.01	c0.35		c0.09	0.11	
v/s Ratio Perm						0.03						
v/c Ratio	0.64	0.74		0.35	0.60	0.15	0.35	0.86		0.77	0.22	
Uniform Delay, d1	41.9	32.2		45.4	34.5	31.1	45.4	26.1		41.7	14.5	
Progression Factor	1.00	1.00		1.00	1.00	1.00	1.00	1.00		1.00	1.00	
Incremental Delay, d2	6.0	5.6		2.5	2.2	0.2	2.4	9.5		15.8	0.1	
Delay (s)	48.0	37.8		47.9	36.6	31.3	47.7	35.7		57.5	14.6	
Level of Service	D	D		D	D	C	D	D		E	B	
Approach Delay (s)		40.1			34.6			36.1			32.6	
Approach LOS		D			C			D			C	

Intersection Summary			
HCM Average Control Delay	36.1	HCM Level of Service	D
HCM Volume to Capacity ratio	0.78		
Actuated Cycle Length (s)	96.9	Sum of lost time (s)	12.0
Intersection Capacity Utilization	82.4%	ICU Level of Service	E
Analysis Period (min)	15		

c Critical Lane Group

Movement	EBL	EBT	EBR	WBL	WBT	WBR	NBL	NBT	NBR	SBL	SBT	SBR
Lane Configurations												
Volume (vph)	205	640	5	5	490	250	5	5	5	250	5	95
Ideal Flow (vphpl)	1900	1900	1900	1900	1900	1900	1900	1900	1900	1900	1900	1900
Total Lost time (s)	4.0	4.0		4.0	4.0	4.0		4.0			4.0	4.0
Lane Util. Factor	1.00	0.95		1.00	1.00	1.00		1.00			1.00	1.00
Frt	1.00	1.00		1.00	1.00	0.85		0.95			1.00	0.85
Flt Protected	0.95	1.00		0.95	1.00	1.00		0.98			0.95	1.00
Satd. Flow (prot)	1805	3606		1805	1900	1615		1785			1811	1615
Flt Permitted	0.95	1.00		0.95	1.00	1.00		1.00			0.95	1.00
Satd. Flow (perm)	1805	3606		1805	1900	1615		1814			1811	1615
Peak-hour factor, PHF	1.00	1.00	1.00	1.00	1.00	1.00	1.00	1.00	1.00	1.00	1.00	1.00
Adj. Flow (vph)	205	640	5	5	490	250	5	5	5	250	5	95
RTOR Reduction (vph)	0	0	0	0	0	156	0	5	0	0	0	75
Lane Group Flow (vph)	205	645	0	5	490	94	0	10	0	0	255	20
Heavy Vehicles (%)	0%	0%	0%	0%	0%	0%	0%	0%	0%	0%	0%	0%
Turn Type	Prot			Prot		Perm	Perm			Split		Perm
Protected Phases	5	2		1	6			8		4	4	
Permitted Phases						6	8					4
Actuated Green, G (s)	12.2	39.9		0.7	27.4	27.4		0.7			14.5	14.5
Effective Green, g (s)	14.2	41.9		1.7	29.4	29.4		1.7			16.5	16.5
Actuated g/C Ratio	0.18	0.54		0.02	0.38	0.38		0.02			0.21	0.21
Clearance Time (s)	6.0	6.0		5.0	6.0	6.0		5.0			6.0	6.0
Vehicle Extension (s)	2.4	2.7		2.4	2.7	2.7		2.5			2.5	2.5
Lane Grp Cap (vph)	329	1942		39	718	610		40			384	343
v/s Ratio Prot	c0.11	0.18		0.00	c0.26						c0.14	
v/s Ratio Perm						0.06		c0.01				0.01
v/c Ratio	0.62	0.33		0.13	0.68	0.15		0.25			0.66	0.06
Uniform Delay, d1	29.3	10.1		37.3	20.3	16.0		37.4			28.1	24.5
Progression Factor	1.00	1.00		1.00	1.00	1.00		1.00			1.00	1.00
Incremental Delay, d2	3.1	0.1		1.0	2.5	0.1		2.4			3.9	0.1
Delay (s)	32.4	10.2		38.3	22.8	16.1		39.8			32.0	24.5
Level of Service	C	B		D	C	B		D			C	C
Approach Delay (s)		15.5			20.7			39.8			29.9	
Approach LOS		B			C			D			C	

Intersection Summary			
HCM Average Control Delay	20.2	HCM Level of Service	C
HCM Volume to Capacity ratio	0.65		
Actuated Cycle Length (s)	77.8	Sum of lost time (s)	16.0
Intersection Capacity Utilization	67.9%	ICU Level of Service	C
Analysis Period (min)	15		

c Critical Lane Group

Movement	EBL	EBT	EBR	WBL	WBT	WBR	NBL	NBT	NBR	SBL	SBT	SBR
Lane Configurations												
Volume (vph)	270	775	120	45	450	95	180	680	130	130	210	125
Ideal Flow (vphpl)	1900	1900	1900	1900	1900	1900	1900	1900	1900	1900	1900	1900
Total Lost time (s)	4.0	4.0		4.0	4.0		4.0	4.0		4.0	4.0	
Lane Util. Factor	1.00	0.95		1.00	0.95		1.00	0.95		1.00	0.95	
Frt	1.00	0.98		1.00	0.97		1.00	0.98		1.00	0.94	
Flt Protected	0.95	1.00		0.95	1.00		0.95	1.00		0.95	1.00	
Satd. Flow (prot)	1805	3537		1805	3516		1805	3523		1805	3408	
Flt Permitted	0.95	1.00		0.95	1.00		0.95	1.00		0.95	1.00	
Satd. Flow (perm)	1805	3537		1805	3516		1805	3523		1805	3408	
Peak-hour factor, PHF	1.00	1.00	1.00	1.00	1.00	1.00	1.00	1.00	1.00	1.00	1.00	1.00
Adj. Flow (vph)	270	775	120	45	450	95	180	680	130	130	210	125
RTOR Reduction (vph)	0	13	0	0	18	0	0	12	0	0	71	0
Lane Group Flow (vph)	270	882	0	45	527	0	180	798	0	130	264	0
Heavy Vehicles (%)	0%	0%	0%	0%	0%	0%	0%	0%	0%	0%	0%	0%
Turn Type	Prot			Prot			Prot			Prot		
Protected Phases	5	2		1	6		3	8		7	4	
Permitted Phases												
Actuated Green, G (s)	18.3	32.5		4.1	18.3		13.0	24.1		9.7	20.8	
Effective Green, g (s)	18.8	33.0		4.6	18.8		13.5	24.6		10.2	21.3	
Actuated g/C Ratio	0.21	0.37		0.05	0.21		0.15	0.28		0.12	0.24	
Clearance Time (s)	4.5	4.5		4.5	4.5		4.5	4.5		4.5	4.5	
Vehicle Extension (s)	3.0	1.0		3.0	1.0		3.0	1.0		3.0	1.0	
Lane Grp Cap (vph)	384	1320		94	748		276	980		208	821	
v/s Ratio Prot	c0.15	c0.25		0.02	0.15		c0.10	c0.23		0.07	0.08	
v/s Ratio Perm												
v/c Ratio	0.70	0.67		0.48	0.70		0.65	0.81		0.62	0.32	
Uniform Delay, d1	32.2	23.1		40.7	32.2		35.2	29.8		37.3	27.6	
Progression Factor	1.00	1.00		1.00	1.00		1.00	1.00		1.00	1.00	
Incremental Delay, d2	5.7	1.0		3.8	2.5		5.4	5.0		5.7	0.1	
Delay (s)	38.0	24.1		44.5	34.7		40.7	34.8		43.0	27.7	
Level of Service	D	C		D	C		D	C		D	C	
Approach Delay (s)		27.3			35.5			35.8			32.0	
Approach LOS		C			D			D			C	

Intersection Summary			
HCM Average Control Delay	32.1	HCM Level of Service	C
HCM Volume to Capacity ratio	0.72		
Actuated Cycle Length (s)	88.4	Sum of lost time (s)	12.0
Intersection Capacity Utilization	73.9%	ICU Level of Service	D
Analysis Period (min)	15		

c Critical Lane Group

General & Site Information

Analyst:	CMG
Agency/Company:	David Evans and Associates, Inc.
Date:	7/16/2012
Project Name:	South Hillsboro Focus Area Plan
Intersection:	Alexander at Brookwood
Analysis Time Period:	AM Peak Hour
Jurisdiction:	City of Hillsboro
Year:	2035 without SoHi

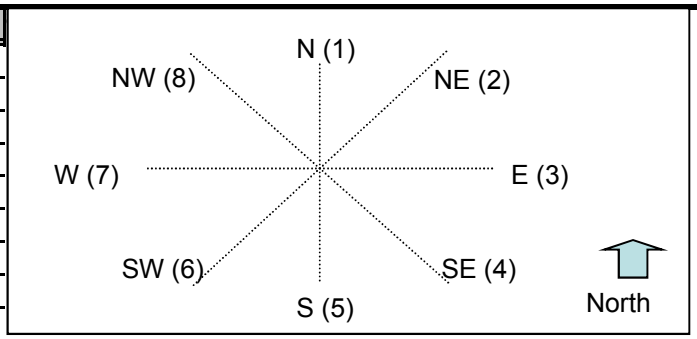

Volumes		Roundabout Approach/Entry Legs							
		N (1)	NE (2)	E (3)	SE (4)	S (5)	SW (6)	W (7)	NW (8)
Input Volumes to Leg #	N (1), vph	335		35		200		200	
	NE (2), vph								
	E (3), vph	80				45		90	
	SE (4), vph								
	S (5), vph	145		10				5	
	SW (6), vph								
	W (7), vph	30		15		5			
	NW (8), vph								
Output	Total Vehicles	590	0	60	0	250	0	295	0

Volume Characteristics	N	NE	E	SE	S	SW	W	NW
% Trucks	0.0	0.0	0.0	0.0	0.0	0.0	0.0	0.0
E_t	2.0	2.0	2.0	2.0	2.0	2.0	2.0	2.0
PHF	1.00	1.00	1.00	1.00	1.00	1.00	1.00	1.00
F_{HV}	1.000	1.000	1.000	1.000	1.000	1.000	1.000	1.000

Entry/Conflicting Flows	N	NE	E	SE	S	SW	W	NW
Flow to Leg # N (1), pcu/h	335	0	35	0	200	0	200	0
NE (2), pcu/h	0	0	0	0	0	0	0	0
E (3), pcu/h	80	0	0	0	45	0	90	0
SE (4), pcu/h	0	0	0	0	0	0	0	0
S (5), pcu/h	145	0	10	0	0	0	5	0
SW (6), pcu/h	0	0	0	0	0	0	0	0
W (7), pcu/h	30	0	15	0	5	0	0	0
NW (8), pcu/h	0	0	0	0	0	0	0	0
Entry flow, pcu/h	590	0	60	0	250	0	295	0
Conflicting flow, pcu/h	30	800	740	955	705	865	570	620

Results	N	NE	E	SE	S	SW	W	NW
Entry Capacity, pcu/h	1097	NA	539	NA	558	NA	639	NA
Leg v/c ratio	0.54		0.11		0.45		0.46	
Control Delay, s/pcu	7.0		7.5		11.6		10.4	
LOS	A		A		B		B	
95th Percentile Queue (ft)	910	0	93	0	385	0	455	0

Movement	EBL	EBR	NBL	NBT	SBT	SBR
Lane Configurations						
Volume (veh/h)	130	20	25	265	375	130
Sign Control	Stop			Free	Free	
Grade	0%			0%	0%	
Peak Hour Factor	1.00	1.00	1.00	1.00	1.00	1.00
Hourly flow rate (vph)	130	20	25	265	375	130
Pedestrians						
Lane Width (ft)						
Walking Speed (ft/s)						
Percent Blockage						
Right turn flare (veh)						
Median type				None	None	
Median storage veh)						
Upstream signal (ft)						
pX, platoon unblocked						
vC, conflicting volume	755	440	505			
vC1, stage 1 conf vol						
vC2, stage 2 conf vol						
vCu, unblocked vol	755	440	505			
tC, single (s)	6.4	6.2	4.1			
tC, 2 stage (s)						
tF (s)	3.5	3.3	2.2			
p0 queue free %	65	97	98			
cM capacity (veh/h)	368	617	1060			

Direction, Lane #	EB 1	EB 2	NB 1	NB 2	SB 1
Volume Total	130	20	25	265	505
Volume Left	130	0	25	0	0
Volume Right	0	20	0	0	130
cSH	368	617	1060	1700	1700
Volume to Capacity	0.35	0.03	0.02	0.16	0.30
Queue Length 95th (ft)	39	3	2	0	0
Control Delay (s)	20.1	11.0	8.5	0.0	0.0
Lane LOS	C	B	A		
Approach Delay (s)	18.9		0.7		0.0
Approach LOS	C				

Intersection Summary			
Average Delay	3.2		
Intersection Capacity Utilization	42.3%	ICU Level of Service	A
Analysis Period (min)	15		

Movement	EBL	EBT	EBR	WBL	WBT	WBR	NBL	NBT	NBR	SBL	SBT	SBR
Lane Configurations												
Volume (vph)	15	1200	465	40	1055	85	240	135	25	55	125	25
Ideal Flow (vphpl)	1900	1900	1900	1900	1900	1900	1900	1900	1900	1900	1900	1900
Total Lost time (s)	4.0	4.0		4.0	4.0		3.0	4.0		3.0	4.0	
Lane Util. Factor	1.00	0.95		1.00	0.95		0.97	1.00		1.00	1.00	
Frt	1.00	0.96		1.00	0.99		1.00	0.98		1.00	0.97	
Flt Protected	0.95	1.00		0.95	1.00		0.95	1.00		0.95	1.00	
Satd. Flow (prot)	1805	3248		1805	3570		3502	1855		1805	1852	
Flt Permitted	0.16	1.00		0.07	1.00		0.95	1.00		0.95	1.00	
Satd. Flow (perm)	307	3248		136	3570		3502	1855		1805	1852	
Peak-hour factor, PHF	1.00	1.00	1.00	1.00	1.00	1.00	1.00	1.00	1.00	1.00	1.00	1.00
Adj. Flow (vph)	15	1200	465	40	1055	85	240	135	25	55	125	25
RTOR Reduction (vph)	0	33	0	0	5	0	0	7	0	0	8	0
Lane Group Flow (vph)	15	1632	0	40	1135	0	240	153	0	55	142	0
Heavy Vehicles (%)	0%	9%	0%	0%	0%	0%	0%	0%	0%	0%	0%	0%
Turn Type	pm+pt			pm+pt			Prot			Prot		
Protected Phases	5	2		1	6		3	8		7	4	
Permitted Phases	2			6								
Actuated Green, G (s)	58.4	58.4		60.2	59.7		6.0	16.9		4.0	14.9	
Effective Green, g (s)	58.4	58.9		60.2	60.2		7.0	17.9		5.0	15.9	
Actuated g/C Ratio	0.58	0.59		0.60	0.60		0.07	0.18		0.05	0.16	
Clearance Time (s)	4.0	4.5		4.0	4.5		4.0	5.0		4.0	5.0	
Vehicle Extension (s)	2.3	4.3		2.3	4.3		2.5	2.5		2.5	2.5	
Lane Grp Cap (vph)	208	1913		135	2149		245	332		90	294	
v/s Ratio Prot	0.00	c0.50		0.01	c0.32		c0.07	c0.08		0.03	0.08	
v/s Ratio Perm	0.04			0.17								
v/c Ratio	0.07	0.85		0.30	0.53		0.98	0.46		0.61	0.48	
Uniform Delay, d1	10.8	17.0		27.7	11.6		46.4	36.7		46.5	38.3	
Progression Factor	1.00	1.00		0.49	0.44		1.00	1.00		1.00	1.00	
Incremental Delay, d2	0.1	5.1		0.6	0.8		51.1	0.7		10.0	0.9	
Delay (s)	10.9	22.0		14.1	5.9		97.6	37.5		56.6	39.2	
Level of Service	B	C		B	A		F	D		E	D	
Approach Delay (s)		21.9			6.2			73.5			43.9	
Approach LOS		C			A			E			D	

Intersection Summary			
HCM Average Control Delay	23.8	HCM Level of Service	C
HCM Volume to Capacity ratio	0.72		
Actuated Cycle Length (s)	100.0	Sum of lost time (s)	7.0
Intersection Capacity Utilization	73.2%	ICU Level of Service	D
Analysis Period (min)	15		

c Critical Lane Group

Movement	EBL	EBT	EBR	WBL	WBT	WBR	NBL	NBT	NBR	SBL	SBT	SBR
Lane Configurations												
Volume (vph)	145	560	150	50	310	200	60	290	35	275	315	85
Ideal Flow (vphpl)	1900	1900	1900	1900	1900	1900	1900	1900	1900	1900	1900	1900
Total Lost time (s)	4.0	4.0		4.0	4.0		4.0	4.0	5.7	4.0	4.0	
Lane Util. Factor	1.00	1.00		1.00	1.00		1.00	1.00	1.00	1.00	1.00	
Frt	1.00	0.97		1.00	0.94		1.00	1.00	0.85	1.00	0.97	
Flt Protected	0.95	1.00		0.95	1.00		0.95	1.00	1.00	0.95	1.00	
Satd. Flow (prot)	1805	1832		1805	1788		1805	1900	1615	1805	1825	
Flt Permitted	0.95	1.00		0.95	1.00		0.95	1.00	1.00	0.95	1.00	
Satd. Flow (perm)	1805	1832		1805	1788		1805	1900	1615	1805	1825	
Peak-hour factor, PHF	1.00	1.00	1.00	1.00	1.00	1.00	1.00	1.00	1.00	1.00	1.00	1.00
Adj. Flow (vph)	145	560	150	50	310	200	60	290	35	275	315	85
RTOR Reduction (vph)	0	11	0	0	27	0	0	0	29	0	10	0
Lane Group Flow (vph)	145	699	0	50	483	0	60	290	6	275	390	0
Heavy Vehicles (%)	0%	0%	2%	0%	0%	0%	0%	0%	0%	0%	1%	0%
Turn Type	Prot			Prot			Prot		Perm	Prot		
Protected Phases	5	2		1	6		7	4		3	8	
Permitted Phases									4			
Actuated Green, G (s)	9.0	34.2		2.8	27.8		3.8	15.4	15.4	14.2	26.0	
Effective Green, g (s)	10.5	35.2		4.3	29.0		3.8	16.6	14.9	14.2	27.0	
Actuated g/C Ratio	0.12	0.41		0.05	0.34		0.04	0.19	0.17	0.16	0.31	
Clearance Time (s)	5.5	5.0		5.5	5.2		4.0	5.2	5.2	4.0	5.0	
Vehicle Extension (s)	3.1	2.5		3.1	2.5		2.5	2.5	2.5	2.5	2.5	
Lane Grp Cap (vph)	220	747		90	601		79	365	279	297	571	
v/s Ratio Prot	c0.08	c0.38		0.03	0.27		0.03	c0.15		c0.15	0.21	
v/s Ratio Perm									0.00			
v/c Ratio	0.66	0.94		0.56	0.80		0.76	0.79	0.02	0.93	0.68	
Uniform Delay, d1	36.2	24.5		40.1	26.1		40.8	33.2	29.6	35.5	25.9	
Progression Factor	1.00	1.00		1.00	1.00		1.00	1.00	1.00	1.00	1.00	
Incremental Delay, d2	7.0	18.9		7.4	7.4		32.2	11.0	0.0	33.1	3.1	
Delay (s)	43.2	43.4		47.4	33.5		73.0	44.2	29.7	68.7	29.0	
Level of Service	D	D		D	C		E	D	C	E	C	
Approach Delay (s)		43.4			34.7			47.4			45.1	
Approach LOS		D			C			D			D	

Intersection Summary			
HCM Average Control Delay	42.5	HCM Level of Service	D
HCM Volume to Capacity ratio	0.90		
Actuated Cycle Length (s)	86.3	Sum of lost time (s)	16.0
Intersection Capacity Utilization	86.6%	ICU Level of Service	E
Analysis Period (min)	15		

c Critical Lane Group

Movement	EBL	EBT	EBR	WBL	WBT	WBR	NBL	NBT	NBR	SBL	SBT	SBR
Lane Configurations												
Volume (vph)	120	1220	135	150	920	90	155	265	160	165	360	155
Ideal Flow (vphpl)	1900	1900	1900	1900	1900	1900	1900	1900	1900	1900	1900	1900
Total Lost time (s)	4.0	4.0		4.0	4.0	4.0		4.0	4.0	4.0	4.0	5.0
Lane Util. Factor	1.00	0.95		1.00	0.95	1.00		0.95	1.00	1.00	1.00	1.00
Frt	1.00	0.99		1.00	1.00	0.85		1.00	0.85	1.00	1.00	0.85
Flt Protected	0.95	1.00		0.95	1.00	1.00		0.98	1.00	0.95	1.00	1.00
Satd. Flow (prot)	1805	3556		1805	3610	1615		3545	1615	1805	1900	1615
Flt Permitted	0.95	1.00		0.95	1.00	1.00		0.98	1.00	0.95	1.00	1.00
Satd. Flow (perm)	1805	3556		1805	3610	1615		3545	1615	1805	1900	1615
Peak-hour factor, PHF	1.00	1.00	1.00	1.00	1.00	1.00	1.00	1.00	1.00	1.00	1.00	1.00
Adj. Flow (vph)	120	1220	135	150	920	90	155	265	160	165	360	155
RTOR Reduction (vph)	0	8	0	0	0	56	0	0	135	0	0	103
Lane Group Flow (vph)	120	1347	0	150	920	34	0	420	25	165	360	52
Heavy Vehicles (%)	0%	0%	0%	0%	0%	0%	0%	0%	0%	0%	0%	0%
Turn Type	Prot			Prot		Perm	Split		Perm	Split		custom
Protected Phases	5	2		1	6		4	4		3	3	
Permitted Phases						6			4			3 5
Actuated Green, G (s)	7.7	39.5		6.0	37.8	37.8		15.9	15.9	21.1	21.1	33.8
Effective Green, g (s)	7.7	40.0		6.0	38.3	38.3		15.9	15.9	22.1	22.1	33.8
Actuated g/C Ratio	0.08	0.40		0.06	0.38	0.38		0.16	0.16	0.22	0.22	0.34
Clearance Time (s)	4.0	4.5		4.0	4.5	4.5		4.0	4.0	5.0	5.0	
Vehicle Extension (s)	2.3	4.3		2.3	4.3	4.3		2.3	2.3	2.3	2.3	
Lane Grp Cap (vph)	139	1422		108	1383	619		564	257	399	420	546
v/s Ratio Prot	0.07	c0.38		c0.08	0.25			c0.12		0.09	c0.19	
v/s Ratio Perm						0.02			0.02			0.03
v/c Ratio	0.86	0.95		1.39	0.67	0.06		0.74	0.10	0.41	0.86	0.10
Uniform Delay, d1	45.6	29.0		47.0	25.5	19.4		40.1	35.9	33.4	37.4	22.6
Progression Factor	0.88	0.99		1.00	1.00	1.00		1.00	1.00	1.00	1.00	1.00
Incremental Delay, d2	30.0	11.1		221.9	2.5	0.2		4.9	0.1	0.4	15.4	0.0
Delay (s)	70.2	39.7		268.9	28.1	19.6		45.0	36.0	33.8	52.8	22.7
Level of Service	E	D		F	C	B		D	D	C	D	C
Approach Delay (s)		42.2			58.6			42.5			41.3	
Approach LOS		D			E			D			D	

Intersection Summary			
HCM Average Control Delay	47.0	HCM Level of Service	D
HCM Volume to Capacity ratio	0.87		
Actuated Cycle Length (s)	100.0	Sum of lost time (s)	12.0
Intersection Capacity Utilization	90.4%	ICU Level of Service	E
Analysis Period (min)	15		

c Critical Lane Group

Movement	EBL	EBT	EBR	WBL	WBT	WBR	NBL	NBT	NBR	SBL	SBT	SBR
Lane Configurations												
Volume (vph)	150	1245	45	300	1185	175	80	200	180	225	425	115
Ideal Flow (vphpl)	1900	1900	1900	1900	1900	1900	1900	1900	1900	1900	1900	1900
Total Lost time (s)	4.0	4.0	4.0	4.0	4.0	4.0	4.0	4.0	4.5	4.0	4.0	
Lane Util. Factor	1.00	0.95	1.00	1.00	0.95	1.00	1.00	0.95	1.00	1.00	0.95	
Frt	1.00	1.00	0.85	1.00	1.00	0.85	1.00	1.00	0.85	1.00	0.97	
Flt Protected	0.95	1.00	1.00	0.95	1.00	1.00	0.95	1.00	1.00	0.95	1.00	
Satd. Flow (prot)	1805	3610	1615	1805	3610	1615	1805	3610	1615	1805	3495	
Flt Permitted	0.95	1.00	1.00	0.95	1.00	1.00	0.95	1.00	1.00	0.95	1.00	
Satd. Flow (perm)	1805	3610	1615	1805	3610	1615	1805	3610	1615	1805	3495	
Peak-hour factor, PHF	1.00	1.00	1.00	1.00	1.00	1.00	1.00	1.00	1.00	1.00	1.00	1.00
Adj. Flow (vph)	150	1245	45	300	1185	175	80	200	180	225	425	115
RTOR Reduction (vph)	0	0	23	0	0	89	0	0	42	0	20	0
Lane Group Flow (vph)	150	1245	22	300	1185	86	80	200	138	225	520	0
Heavy Vehicles (%)	0%	0%	0%	0%	0%	0%	0%	0%	0%	0%	0%	0%
Turn Type	Prot		Perm	Prot		Perm	Prot		pt+ov	Prot		
Protected Phases	5	2		1	6		3	8	8 1	7	4	
Permitted Phases			2			6						
Actuated Green, G (s)	13.2	51.8	51.8	19.0	57.6	57.6	8.8	11.7	30.7	19.6	22.5	
Effective Green, g (s)	13.2	53.2	53.2	19.0	59.0	59.0	8.8	12.2	30.7	19.6	23.0	
Actuated g/C Ratio	0.11	0.44	0.44	0.16	0.49	0.49	0.07	0.10	0.26	0.16	0.19	
Clearance Time (s)	4.0	5.4	5.4	4.0	5.4	5.4	4.0	4.5		4.0	4.5	
Vehicle Extension (s)	2.3	4.4	4.4	2.3	4.4	4.4	2.3	2.3		2.3	2.3	
Lane Grp Cap (vph)	199	1600	716	286	1775	794	132	367	413	295	670	
v/s Ratio Prot	0.08	c0.34		c0.17	0.33		0.04	c0.06	0.09	0.12	c0.15	
v/s Ratio Perm			0.01			0.05						
v/c Ratio	0.75	0.78	0.03	1.05	0.67	0.11	0.61	0.54	0.33	0.76	0.78	
Uniform Delay, d1	51.8	28.4	18.9	50.5	23.1	16.4	53.9	51.3	36.3	48.0	46.1	
Progression Factor	1.00	1.00	1.00	1.15	0.71	0.88	1.00	1.00	1.00	1.00	1.00	
Incremental Delay, d2	13.9	3.8	0.1	64.4	1.8	0.3	6.0	1.1	0.3	10.4	5.3	
Delay (s)	65.7	32.2	18.9	122.3	18.2	14.7	59.9	52.4	36.6	58.4	51.3	
Level of Service	E	C	B	F	B	B	E	D	D	E	D	
Approach Delay (s)		35.3			36.7			47.5			53.4	
Approach LOS		D			D			D			D	

Intersection Summary			
HCM Average Control Delay	40.3	HCM Level of Service	D
HCM Volume to Capacity ratio	0.82		
Actuated Cycle Length (s)	120.0	Sum of lost time (s)	16.0
Intersection Capacity Utilization	84.2%	ICU Level of Service	E
Analysis Period (min)	15		

c Critical Lane Group

Movement	EBL	EBT	EBR	WBL	WBT	WBR	NBL	NBT	NBR	SBL	SBT	SBR
Lane Configurations												
Volume (veh/h)	0	0	245	0	0	15	0	445	15	0	455	315
Sign Control		Stop			Stop			Free			Free	
Grade		0%			0%			0%			0%	
Peak Hour Factor	1.00	1.00	1.00	1.00	1.00	1.00	1.00	1.00	1.00	1.00	1.00	1.00
Hourly flow rate (vph)	0	0	245	0	0	15	0	445	15	0	455	315
Pedestrians					1500							
Lane Width (ft)					12.0							
Walking Speed (ft/s)					4.0							
Percent Blockage					80							
Right turn flare (veh)												
Median type								None			None	
Median storage veh)												
Upstream signal (ft)											280	
pX, platoon unblocked	0.86	0.86	0.86	0.86	0.86		0.86					
vC, conflicting volume	922	2415	455	2652	2722	1952	770			1960		
vC1, stage 1 conf vol												
vC2, stage 2 conf vol												
vCu, unblocked vol	827	2567	282	2843	2925	1952	649			1960		
tC, single (s)	7.1	6.5	6.2	7.1	6.5	6.2	4.1			4.1		
tC, 2 stage (s)												
tF (s)	3.5	4.0	3.3	3.5	4.0	3.3	2.2			2.2		
p0 queue free %	100	100	63	100	100	8	100			100		
cM capacity (veh/h)	6	5	654	0	3	16	812			60		

Direction, Lane #	EB 1	WB 1	NB 1	SB 1	SB 2
Volume Total	245	15	460	455	315
Volume Left	0	0	0	0	0
Volume Right	245	15	15	0	315
cSH	654	16	1700	1700	1700
Volume to Capacity	0.37	0.92	0.27	0.27	0.19
Queue Length 95th (ft)	43	57	0	0	0
Control Delay (s)	13.8	513.5	0.0	0.0	0.0
Lane LOS	B	F			
Approach Delay (s)	13.8	513.5	0.0	0.0	
Approach LOS	B	F			

Intersection Summary			
Average Delay	7.4		
Intersection Capacity Utilization	45.8%	ICU Level of Service	A
Analysis Period (min)	15		

Movement	EBL	EBT	EBR	WBL	WBT	WBR	NBL	NBT	NBR	SBL	SBT	SBR
Lane Configurations												
Volume (vph)	125	1395	110	140	1345	95	70	115	140	95	165	160
Ideal Flow (vphpl)	1900	1900	1900	1900	1900	1900	1900	1900	1900	1900	1900	1900
Total Lost time (s)	4.0	4.0	4.0	4.0	4.0		4.0	4.0		4.0	4.0	
Lane Util. Factor	1.00	0.95	1.00	1.00	0.95		1.00	1.00		1.00	1.00	
Frt	1.00	1.00	0.85	1.00	0.99		1.00	0.92		1.00	0.93	
Flt Protected	0.95	1.00	1.00	0.95	1.00		0.95	1.00		0.95	1.00	
Satd. Flow (prot)	1770	3505	1599	1641	3475		1770	1690		1770	1700	
Flt Permitted	0.95	1.00	1.00	0.95	1.00		0.95	1.00		0.95	1.00	
Satd. Flow (perm)	1770	3505	1599	1641	3475		1770	1690		1770	1700	
Peak-hour factor, PHF	1.00	1.00	1.00	1.00	1.00	1.00	1.00	1.00	1.00	1.00	1.00	1.00
Adj. Flow (vph)	125	1395	110	140	1345	95	70	115	140	95	165	160
RTOR Reduction (vph)	0	0	30	0	4	0	0	37	0	0	29	0
Lane Group Flow (vph)	125	1395	80	140	1436	0	70	218	0	95	296	0
Heavy Vehicles (%)	2%	3%	1%	10%	3%	1%	2%	1%	5%	2%	5%	2%
Turn Type	Prot		Perm	Prot			Prot			Prot		
Protected Phases	5	2		1	6		3	8		7	4	
Permitted Phases			2									
Actuated Green, G (s)	12.0	58.4	58.4	12.0	58.4		7.5	21.9		9.8	24.2	
Effective Green, g (s)	12.0	59.8	59.8	12.0	59.8		7.5	22.4		9.8	24.7	
Actuated g/C Ratio	0.10	0.50	0.50	0.10	0.50		0.06	0.19		0.08	0.21	
Clearance Time (s)	4.0	5.4	5.4	4.0	5.4		4.0	4.5		4.0	4.5	
Vehicle Extension (s)	2.3	4.5	4.5	2.3	4.5		2.5	2.5		2.5	2.5	
Lane Grp Cap (vph)	177	1747	797	164	1732		111	315		145	350	
v/s Ratio Prot	0.07	c0.40		0.09	c0.41		0.04	0.13		c0.05	c0.17	
v/s Ratio Perm			0.05									
v/c Ratio	0.71	0.80	0.10	0.85	0.83		0.63	0.69		0.66	0.84	
Uniform Delay, d1	52.3	25.1	15.9	53.1	25.7		54.9	45.6		53.5	45.8	
Progression Factor	1.04	1.11	1.13	1.27	0.80		1.00	1.00		1.00	1.00	
Incremental Delay, d2	9.6	3.5	0.2	27.6	3.9		9.8	5.9		9.1	16.5	
Delay (s)	64.1	31.2	18.2	95.3	24.4		64.7	51.5		62.6	62.4	
Level of Service	E	C	B	F	C		E	D		E	E	
Approach Delay (s)		32.9			30.7			54.3			62.4	
Approach LOS		C			C			D			E	

Intersection Summary			
HCM Average Control Delay	36.9	HCM Level of Service	D
HCM Volume to Capacity ratio	0.79		
Actuated Cycle Length (s)	120.0	Sum of lost time (s)	8.0
Intersection Capacity Utilization	82.8%	ICU Level of Service	E
Analysis Period (min)	15		

c Critical Lane Group

Movement	EBL	EBT	EBR	WBL	WBT	WBR	NBL	NBT	NBR	SBL	SBT	SBR
Lane Configurations												
Volume (vph)	195	60	100	160	20	190	65	675	60	115	1070	275
Ideal Flow (vphpl)	1900	1900	1900	1900	1900	1900	1900	1900	1900	1900	1900	1900
Total Lost time (s)	4.5	4.5		4.5	4.5		4.5	4.5		4.5	4.5	
Lane Util. Factor	1.00	1.00		1.00	1.00		1.00	0.95		1.00	0.95	
Frt	1.00	0.91		1.00	0.86		1.00	0.99		1.00	0.97	
Flt Protected	0.95	1.00		0.95	1.00		0.95	1.00		0.95	1.00	
Satd. Flow (prot)	1770	1688		1770	1610		1770	3496		1770	3431	
Flt Permitted	0.39	1.00		0.58	1.00		0.12	1.00		0.29	1.00	
Satd. Flow (perm)	730	1688		1084	1610		219	3496		539	3431	
Peak-hour factor, PHF	1.00	1.00	1.00	1.00	1.00	1.00	1.00	1.00	1.00	1.00	1.00	1.00
Adj. Flow (vph)	195	60	100	160	20	190	65	675	60	115	1070	275
RTOR Reduction (vph)	0	54	0	0	167	0	0	6	0	0	22	0
Lane Group Flow (vph)	195	106	0	160	43	0	65	729	0	115	1323	0
Turn Type	pm+pt			pm+pt			pm+pt			pm+pt		
Protected Phases	3	8		7	4		1	6		5	2	
Permitted Phases	8			4			6			2		
Actuated Green, G (s)	22.5	10.7		20.5	9.7		39.3	34.6		40.1	35.0	
Effective Green, g (s)	21.5	10.2		19.5	9.2		38.3	34.1		39.1	34.5	
Actuated g/C Ratio	0.28	0.13		0.25	0.12		0.50	0.44		0.51	0.45	
Clearance Time (s)	4.0	4.0		4.0	4.0		4.0	4.0		4.0	4.0	
Vehicle Extension (s)	2.5	2.5		2.5	2.5		2.5	2.5		2.5	2.5	
Lane Grp Cap (vph)	356	223		365	192		193	1544		346	1533	
v/s Ratio Prot	c0.08	0.06		0.06	0.03		0.02	0.21		c0.02	c0.39	
v/s Ratio Perm	c0.07			0.05			0.15			0.15		
v/c Ratio	0.55	0.48		0.44	0.22		0.34	0.47		0.33	0.86	
Uniform Delay, d1	22.8	31.0		23.7	30.8		13.9	15.2		10.5	19.2	
Progression Factor	1.00	1.00		1.00	1.00		1.00	1.00		1.00	1.00	
Incremental Delay, d2	1.4	1.2		0.6	0.4		0.8	0.2		0.4	5.2	
Delay (s)	24.2	32.2		24.3	31.2		14.7	15.4		10.9	24.5	
Level of Service	C	C		C	C		B	B		B	C	
Approach Delay (s)		27.8			28.2			15.3			23.4	
Approach LOS		C			C			B			C	

Intersection Summary			
HCM Average Control Delay	22.4	HCM Level of Service	C
HCM Volume to Capacity ratio	0.63		
Actuated Cycle Length (s)	77.2	Sum of lost time (s)	9.0
Intersection Capacity Utilization	80.5%	ICU Level of Service	D
Analysis Period (min)	15		
c Critical Lane Group			

Movement	EBL	EBT	EBR	WBL	WBT	WBR	NBL	NBT	NBR	SBL	SBT	SBR
Lane Configurations												
Volume (vph)	45	1490	50	30	1450	85	70	40	60	75	90	35
Ideal Flow (vphpl)	1900	1900	1900	1900	1900	1900	1900	1900	1900	1900	1900	1900
Total Lost time (s)	4.0	4.0		4.0	4.0	4.0		4.0			4.0	4.0
Lane Util. Factor	1.00	0.95		1.00	0.95	1.00		1.00			1.00	1.00
Frt	1.00	1.00		1.00	1.00	0.85		0.95			1.00	0.85
Flt Protected	0.95	1.00		0.95	1.00	1.00		0.98			0.98	1.00
Satd. Flow (prot)	1805	3592		1805	3610	1615		1773			1858	1615
Flt Permitted	0.95	1.00		0.95	1.00	1.00		0.47			0.66	1.00
Satd. Flow (perm)	1805	3592		1805	3610	1615		851			1258	1615
Peak-hour factor, PHF	1.00	1.00	1.00	1.00	1.00	1.00	1.00	1.00	1.00	1.00	1.00	1.00
Adj. Flow (vph)	45	1490	50	30	1450	85	70	40	60	75	90	35
RTOR Reduction (vph)	0	2	0	0	0	7	0	16	0	0	0	30
Lane Group Flow (vph)	45	1538	0	30	1450	78	0	154	0	0	165	5
Heavy Vehicles (%)	0%	0%	0%	0%	0%	0%	0%	0%	0%	0%	0%	0%
Turn Type	Prot			Prot		Perm	Perm			Perm		Perm
Protected Phases	5	2		1	6			8			4	
Permitted Phases						6	8			4		4
Actuated Green, G (s)	6.8	84.0		6.6	83.8	83.8		16.0			14.8	14.8
Effective Green, g (s)	6.8	85.4		6.6	85.2	85.2		16.0			16.0	16.0
Actuated g/C Ratio	0.06	0.71		0.05	0.71	0.71		0.13			0.13	0.13
Clearance Time (s)	4.0	5.4		4.0	5.4	5.4		4.0			5.2	5.2
Vehicle Extension (s)	2.3	4.5		2.3	4.5	4.5		2.5			2.5	2.5
Lane Grp Cap (vph)	102	2556		99	2563	1147		113			168	215
v/s Ratio Prot	0.02	c0.43		0.02	c0.40							
v/s Ratio Perm						0.05		c0.18			0.13	0.00
v/c Ratio	0.44	0.60		0.30	0.57	0.07		1.36			0.98	0.02
Uniform Delay, d1	54.8	8.7		54.5	8.4	5.3		52.0			51.9	45.2
Progression Factor	0.97	0.79		1.19	1.66	0.86		1.00			1.00	1.00
Incremental Delay, d2	1.1	0.7		0.6	0.6	0.1		208.2			63.8	0.0
Delay (s)	54.0	7.6		65.4	14.5	4.6		260.2			115.7	45.2
Level of Service	D	A		E	B	A		F			F	D
Approach Delay (s)		8.9			15.0			260.2			103.3	
Approach LOS		A			B			F			F	

Intersection Summary			
HCM Average Control Delay	29.1	HCM Level of Service	C
HCM Volume to Capacity ratio	0.70		
Actuated Cycle Length (s)	120.0	Sum of lost time (s)	8.0
Intersection Capacity Utilization	65.8%	ICU Level of Service	C
Analysis Period (min)	15		

c Critical Lane Group

Movement	WBL	WBR	NBT	NBR	SBL	SBT
Lane Configurations						
Volume (veh/h)	50	170	305	90	270	455
Sign Control	Stop		Free			Free
Grade	0%		0%			0%
Peak Hour Factor	1.00	1.00	1.00	1.00	1.00	1.00
Hourly flow rate (vph)	50	170	305	90	270	455
Pedestrians						
Lane Width (ft)						
Walking Speed (ft/s)						
Percent Blockage						
Right turn flare (veh)						
Median type			None			None
Median storage veh)						
Upstream signal (ft)						1106
pX, platoon unblocked	0.99					
vC, conflicting volume	1345	350			395	
vC1, stage 1 conf vol						
vC2, stage 2 conf vol						
vCu, unblocked vol	1343	350			395	
tC, single (s)	6.4	6.2			4.1	
tC, 2 stage (s)						
tF (s)	3.5	3.3			2.2	
p0 queue free %	61	76			77	
cM capacity (veh/h)	129	698			1175	

Direction, Lane #	WB 1	WB 2	NB 1	SB 1	SB 2
Volume Total	50	170	395	270	455
Volume Left	50	0	0	270	0
Volume Right	0	170	90	0	0
cSH	129	698	1700	1175	1700
Volume to Capacity	0.39	0.24	0.23	0.23	0.27
Queue Length 95th (ft)	41	24	0	22	0
Control Delay (s)	49.7	11.8	0.0	9.0	0.0
Lane LOS	E	B		A	
Approach Delay (s)	20.4		0.0	3.3	
Approach LOS	C				

Intersection Summary			
Average Delay	5.2		
Intersection Capacity Utilization	51.1%	ICU Level of Service	A
Analysis Period (min)	15		

Movement	EBL	EBT	EBR	WBL	WBT	WBR	NBL	NBT	NBR	SBL	SBT	SBR
Lane Configurations												
Volume (vph)	115	280	160	105	255	165	80	590	45	280	950	60
Ideal Flow (vphpl)	1900	1900	1900	1900	1900	1900	1900	1900	1900	1900	1900	1900
Total Lost time (s)	4.0	4.0		4.0	4.0		4.0	4.0		4.0	4.0	
Lane Util. Factor	1.00	1.00		1.00	1.00		1.00	0.95		1.00	0.95	
Frt	1.00	0.95		1.00	0.94		1.00	0.99		1.00	0.99	
Flt Protected	0.95	1.00		0.95	1.00		0.95	1.00		0.95	1.00	
Satd. Flow (prot)	1805	1796		1805	1788		1805	3572		1805	3578	
Flt Permitted	0.95	1.00		0.95	1.00		0.13	1.00		0.23	1.00	
Satd. Flow (perm)	1805	1796		1805	1788		239	3572		438	3578	
Peak-hour factor, PHF	1.00	1.00	1.00	1.00	1.00	1.00	1.00	1.00	1.00	1.00	1.00	1.00
Adj. Flow (vph)	115	280	160	105	255	165	80	590	45	280	950	60
RTOR Reduction (vph)	0	16	0	0	19	0	0	4	0	0	3	0
Lane Group Flow (vph)	115	424	0	105	401	0	80	631	0	280	1007	0
Heavy Vehicles (%)	0%	0%	0%	0%	0%	0%	0%	0%	0%	0%	0%	0%
Turn Type	Prot			Prot			pm+pt			pm+pt		
Protected Phases	3	8		7	4		1	6		5	2	
Permitted Phases							6			2		
Actuated Green, G (s)	9.0	35.5		8.4	34.9		38.0	33.2		48.5	38.7	
Effective Green, g (s)	10.0	36.9		9.4	36.3		40.0	34.7		49.5	40.2	
Actuated g/C Ratio	0.09	0.34		0.09	0.34		0.37	0.32		0.46	0.37	
Clearance Time (s)	5.0	5.4		5.0	5.4		5.0	5.5		5.0	5.5	
Vehicle Extension (s)	0.2	5.0		0.2	8.0		0.2	5.0		0.2	5.0	
Lane Grp Cap (vph)	167	612		157	599		172	1144		343	1328	
v/s Ratio Prot	c0.06	c0.24		0.06	0.22		0.02	0.18		c0.09	0.28	
v/s Ratio Perm							0.15			c0.29		
v/c Ratio	0.69	0.69		0.67	0.67		0.47	0.55		0.82	0.76	
Uniform Delay, d1	47.6	30.8		47.9	30.9		24.5	30.4		20.9	29.8	
Progression Factor	1.00	1.00		1.00	1.00		1.00	1.00		1.00	1.00	
Incremental Delay, d2	9.0	4.3		8.1	5.9		0.7	1.0		13.2	3.0	
Delay (s)	56.7	35.1		56.0	36.7		25.2	31.4		34.1	32.8	
Level of Service	E	D		E	D		C	C		C	C	
Approach Delay (s)		39.6			40.6			30.7			33.1	
Approach LOS		D			D			C			C	

Intersection Summary			
HCM Average Control Delay	35.0	HCM Level of Service	C
HCM Volume to Capacity ratio	0.72		
Actuated Cycle Length (s)	108.3	Sum of lost time (s)	8.0
Intersection Capacity Utilization	76.9%	ICU Level of Service	D
Analysis Period (min)	15		

c Critical Lane Group

Movement	EBL	EBT	WBT	WBR	SBL	SBR
Lane Configurations						
Volume (vph)	155	1395	1450	305	600	210
Ideal Flow (vphpl)	1900	1900	1900	1900	1900	1900
Total Lost time (s)	4.0	4.0	4.0		4.0	5.0
Lane Util. Factor	1.00	0.95	0.95		0.97	1.00
Frt	1.00	1.00	0.97		1.00	0.85
Flt Protected	0.95	1.00	1.00		0.95	1.00
Satd. Flow (prot)	1805	3610	3510		3502	1599
Flt Permitted	0.95	1.00	1.00		0.95	1.00
Satd. Flow (perm)	1805	3610	3510		3502	1599
Peak-hour factor, PHF	1.00	1.00	1.00	1.00	1.00	1.00
Adj. Flow (vph)	155	1395	1450	305	600	210
RTOR Reduction (vph)	0	0	13	0	0	18
Lane Group Flow (vph)	155	1395	1742	0	600	192
Heavy Vehicles (%)	0%	0%	0%	1%	0%	1%
Turn Type	Prot					custom
Protected Phases	5	2	6		7	4 5
Permitted Phases						
Actuated Green, G (s)	13.2	86.7	69.5		23.9	41.1
Effective Green, g (s)	13.2	88.1	70.9		23.9	41.1
Actuated g/C Ratio	0.11	0.73	0.59		0.20	0.34
Clearance Time (s)	4.0	5.4	5.4		4.0	
Vehicle Extension (s)	2.3	4.5	4.5		2.3	
Lane Grp Cap (vph)	199	2650	2074		697	548
v/s Ratio Prot	c0.09	0.39	c0.50		c0.17	0.12
v/s Ratio Perm						
v/c Ratio	0.78	0.53	0.84		0.86	0.35
Uniform Delay, d1	52.0	6.9	19.9		46.4	29.5
Progression Factor	1.04	0.71	0.62		0.98	0.96
Incremental Delay, d2	13.0	0.6	2.8		10.0	0.2
Delay (s)	66.9	5.5	15.0		55.5	28.6
Level of Service	E	A	B		E	C
Approach Delay (s)		11.6	15.0		48.5	
Approach LOS		B	B		D	

Intersection Summary			
HCM Average Control Delay	20.3	HCM Level of Service	C
HCM Volume to Capacity ratio	0.84		
Actuated Cycle Length (s)	120.0	Sum of lost time (s)	12.0
Intersection Capacity Utilization	85.5%	ICU Level of Service	E
Analysis Period (min)	15		

c Critical Lane Group

Movement	EBL	EBT	EBR	WBL	WBT	WBR	NBL	NBT	NBR	SBL	SBT	SBR
Lane Configurations												
Volume (vph)	75	65	150	120	65	40	85	220	165	145	585	45
Ideal Flow (vphpl)	1900	1900	1900	1900	1900	1900	1900	1900	1900	1900	1900	1900
Total Lost time (s)	4.0	4.0		4.0	4.0		4.0	4.0		4.0	4.0	
Lane Util. Factor	1.00	1.00		1.00	1.00		1.00	0.95		1.00	0.95	
Frt	1.00	0.90		1.00	0.94		1.00	0.94		1.00	0.99	
Flt Protected	0.95	1.00		0.95	1.00		0.95	1.00		0.95	1.00	
Satd. Flow (prot)	1770	1668		1770	1756		1770	3312		1770	3501	
Flt Permitted	1.00	1.00		1.00	1.00		0.33	1.00		0.52	1.00	
Satd. Flow (perm)	1863	1668		1863	1756		609	3312		976	3501	
Peak-hour factor, PHF	1.00	1.00	1.00	1.00	1.00	1.00	1.00	1.00	1.00	1.00	1.00	1.00
Adj. Flow (vph)	75	65	150	120	65	40	85	220	165	145	585	45
RTOR Reduction (vph)	0	80	0	0	23	0	0	81	0	0	3	0
Lane Group Flow (vph)	75	135	0	120	82	0	85	304	0	145	627	0
Turn Type	pm+pt			pm+pt			pm+pt			pm+pt		
Protected Phases	3	8		7	4		1	6		5	2	
Permitted Phases	8			4			6			2		
Actuated Green, G (s)	15.1	15.1		13.0	13.0		61.2	61.2		70.0	70.0	
Effective Green, g (s)	15.1	15.1		13.0	13.0		61.2	61.2		70.0	70.0	
Actuated g/C Ratio	0.13	0.13		0.11	0.11		0.51	0.51		0.58	0.58	
Clearance Time (s)	4.0	4.0		4.0	4.0		4.0	4.0		4.0	4.0	
Vehicle Extension (s)	2.5	2.5		2.5	2.5		2.5	2.5		2.5	2.5	
Lane Grp Cap (vph)	234	210		202	190		378	1689		674	2042	
v/s Ratio Prot	0.04	c0.08		0.06	0.05		c0.01	0.09		0.03	c0.18	
v/s Ratio Perm	0.00			c0.01			0.10			0.10		
v/c Ratio	0.32	0.64		0.59	0.43		0.22	0.18		0.22	0.31	
Uniform Delay, d1	46.2	49.9		51.2	50.0		15.7	15.9		12.2	12.7	
Progression Factor	1.00	1.00		1.00	1.00		0.68	0.50		1.00	1.00	
Incremental Delay, d2	0.6	5.8		3.9	1.1		0.1	0.2		0.1	0.4	
Delay (s)	46.8	55.7		55.1	51.2		10.9	8.1		12.4	13.1	
Level of Service	D	E		E	D		B	A		B	B	
Approach Delay (s)		53.4			53.3			8.6			12.9	
Approach LOS		D			D			A			B	

Intersection Summary			
HCM Average Control Delay	23.6	HCM Level of Service	C
HCM Volume to Capacity ratio	0.38		
Actuated Cycle Length (s)	120.0	Sum of lost time (s)	12.0
Intersection Capacity Utilization	54.9%	ICU Level of Service	A
Analysis Period (min)	15		
c Critical Lane Group			

Movement	EBL	EBT	EBR	WBL	WBT	WBR	NBL	NBT	NBR	SBL	SBT	SBR
Lane Configurations												
Volume (vph)	20	1410	540	145	1560	65	150	225	90	40	270	90
Ideal Flow (vphpl)	1900	1900	1900	1900	1900	1900	1900	1900	1900	1900	1900	1900
Total Lost time (s)	4.0	4.0	3.3	4.0	4.0	4.0	3.5	4.0		3.5	4.0	
Lane Util. Factor	1.00	0.95	1.00	1.00	0.95	1.00	1.00	1.00		1.00	1.00	
Frt	1.00	1.00	0.85	1.00	1.00	0.85	1.00	0.96		1.00	0.96	
Flt Protected	0.95	1.00	1.00	0.95	1.00	1.00	0.95	1.00		0.95	1.00	
Satd. Flow (prot)	1752	3539	1583	1752	3539	1568	1787	1801		1752	1802	
Flt Permitted	0.95	1.00	1.00	0.95	1.00	1.00	0.16	1.00		0.25	1.00	
Satd. Flow (perm)	1752	3539	1583	1752	3539	1568	292	1801		470	1802	
Peak-hour factor, PHF	1.00	1.00	1.00	1.00	1.00	1.00	1.00	1.00	1.00	1.00	1.00	1.00
Adj. Flow (vph)	20	1410	540	145	1560	65	150	225	90	40	270	90
RTOR Reduction (vph)	0	0	142	0	0	11	0	12	0	0	10	0
Lane Group Flow (vph)	20	1410	398	145	1560	54	150	303	0	40	350	0
Heavy Vehicles (%)	3%	2%	2%	3%	2%	3%	1%	1%	1%	3%	0%	6%
Turn Type	Prot		pm+ov	Prot		Perm	pm+pt			pm+pt		
Protected Phases	5	2	3	1	6		3	8		7	4	
Permitted Phases			2			6	8			4		
Actuated Green, G (s)	2.0	49.8	55.8	20.4	68.2	68.2	33.2	27.2		32.0	26.6	
Effective Green, g (s)	2.0	50.5	57.2	20.4	68.9	68.9	34.2	27.7		33.0	27.1	
Actuated g/C Ratio	0.02	0.42	0.48	0.17	0.57	0.57	0.29	0.23		0.28	0.23	
Clearance Time (s)	4.0	4.7	4.0	4.0	4.7	4.7	4.0	4.5		4.0	4.5	
Vehicle Extension (s)	2.3	4.5	2.5	2.3	4.5	4.5	2.5	2.5		2.5	2.5	
Lane Grp Cap (vph)	29	1489	755	298	2032	900	164	416		192	407	
v/s Ratio Prot	0.01	c0.40	0.03	0.08	c0.44		c0.05	0.17		0.01	0.19	
v/s Ratio Perm			0.22			0.03	c0.21			0.05		
v/c Ratio	0.69	0.95	0.53	0.49	0.77	0.06	0.91	0.73		0.21	0.86	
Uniform Delay, d1	58.7	33.5	21.9	45.1	19.5	11.3	38.3	42.7		33.2	44.6	
Progression Factor	0.97	1.31	1.97	0.77	0.42	0.19	1.00	1.00		1.00	1.00	
Incremental Delay, d2	38.0	11.6	0.4	0.6	2.2	0.1	45.9	5.9		0.4	16.2	
Delay (s)	94.7	55.4	43.7	35.2	10.4	2.2	84.2	48.5		33.6	60.8	
Level of Service	F	E	D	D	B	A	F	D		C	E	
Approach Delay (s)		52.6			12.1			60.0			58.1	
Approach LOS		D			B			E			E	

Intersection Summary			
HCM Average Control Delay	38.3	HCM Level of Service	D
HCM Volume to Capacity ratio	0.86		
Actuated Cycle Length (s)	120.0	Sum of lost time (s)	7.5
Intersection Capacity Utilization	88.3%	ICU Level of Service	E
Analysis Period (min)	15		

c Critical Lane Group

Movement	EBL	EBT	EBR	WBL	WBT	WBR	NBL	NBT	NBR	SBL	SBT	SBR
Lane Configurations												
Volume (vph)	65	65	200	30	170	215	150	225	10	215	445	65
Ideal Flow (vphpl)	1900	1900	1900	1900	1900	1900	1900	1900	1900	1900	1900	1900
Total Lost time (s)	4.5	4.5		4.5	4.5		4.5	4.5		4.5	4.5	4.5
Lane Util. Factor	1.00	1.00		1.00	1.00		1.00	1.00		1.00	1.00	1.00
Frt	1.00	0.89		1.00	0.92		1.00	0.99		1.00	1.00	0.85
Flt Protected	0.95	1.00		0.95	1.00		0.95	1.00		0.95	1.00	1.00
Satd. Flow (prot)	1770	1652		1770	1707		1770	1851		1770	1863	1583
Flt Permitted	0.26	1.00		0.58	1.00		0.22	1.00		0.45	1.00	1.00
Satd. Flow (perm)	480	1652		1073	1707		409	1851		847	1863	1583
Peak-hour factor, PHF	1.00	1.00	1.00	1.00	1.00	1.00	1.00	1.00	1.00	1.00	1.00	1.00
Adj. Flow (vph)	65	65	200	30	170	215	150	225	10	215	445	65
RTOR Reduction (vph)	0	90	0	0	39	0	0	1	0	0	0	46
Lane Group Flow (vph)	65	175	0	30	346	0	150	234	0	215	445	19
Turn Type	pm+pt			pm+pt			pm+pt			pm+pt		Perm
Protected Phases	3	8		7	4		1	6		5	2	
Permitted Phases	8			4			6			2		2
Actuated Green, G (s)	29.7	25.3		23.3	22.1		29.2	19.8		32.8	21.6	21.6
Effective Green, g (s)	28.7	24.8		22.3	21.6		28.2	19.3		31.8	21.1	21.1
Actuated g/C Ratio	0.39	0.34		0.30	0.29		0.38	0.26		0.43	0.29	0.29
Clearance Time (s)	4.0	4.0		4.0	4.0		4.0	4.0		4.0	4.0	4.0
Vehicle Extension (s)	2.5	2.5		2.5	2.5		2.5	2.5		2.5	2.5	2.5
Lane Grp Cap (vph)	256	557		332	502		322	486		501	535	454
v/s Ratio Prot	c0.01	0.11		0.00	c0.20		0.06	0.13		c0.06	c0.24	
v/s Ratio Perm	0.09			0.03			0.12			0.12		0.01
v/c Ratio	0.25	0.31		0.09	0.69		0.47	0.48		0.43	0.83	0.04
Uniform Delay, d1	15.4	18.0		18.3	23.0		16.2	22.9		13.7	24.5	18.9
Progression Factor	1.00	1.00		1.00	1.00		1.00	1.00		1.00	1.00	1.00
Incremental Delay, d2	0.4	0.2		0.1	3.6		0.8	0.5		0.4	10.4	0.0
Delay (s)	15.8	18.3		18.3	26.6		17.0	23.4		14.1	35.0	18.9
Level of Service	B	B		B	C		B	C		B	C	B
Approach Delay (s)		17.8			26.0			20.9			27.4	
Approach LOS		B			C			C			C	

Intersection Summary			
HCM Average Control Delay	24.0	HCM Level of Service	C
HCM Volume to Capacity ratio	0.69		
Actuated Cycle Length (s)	73.5	Sum of lost time (s)	18.0
Intersection Capacity Utilization	72.4%	ICU Level of Service	C
Analysis Period (min)	15		
c Critical Lane Group			

Movement	EBL	EBT	EBR	WBL	WBT	WBR	NBL	NBT	NBR	SBL	SBT	SBR
Lane Configurations												
Volume (vph)	145	1300	230	200	1400	170	205	190	120	225	255	95
Ideal Flow (vphpl)	1900	1900	1900	1900	1900	1900	1900	1900	1900	1900	1900	1900
Total Lost time (s)	4.0	4.0	4.0	4.0	4.0	4.0	4.0	4.0	4.0	4.0	4.0	
Lane Util. Factor	1.00	0.95	1.00	1.00	0.95	1.00	1.00	1.00	1.00	1.00	1.00	
Frt	1.00	1.00	0.85	1.00	1.00	0.85	1.00	1.00	0.85	1.00	0.96	
Flt Protected	0.95	1.00	1.00	0.95	1.00	1.00	0.95	1.00	1.00	0.95	1.00	
Satd. Flow (prot)	1805	3610	1615	1805	3312	1615	1805	1900	1615	1805	1823	
Flt Permitted	0.95	1.00	1.00	0.95	1.00	1.00	0.95	1.00	1.00	0.95	1.00	
Satd. Flow (perm)	1805	3610	1615	1805	3312	1615	1805	1900	1615	1805	1823	
Peak-hour factor, PHF	1.00	1.00	1.00	1.00	1.00	1.00	1.00	1.00	1.00	1.00	1.00	1.00
Adj. Flow (vph)	145	1300	230	200	1400	170	205	190	120	225	255	95
RTOR Reduction (vph)	0	0	93	0	0	35	0	0	104	0	11	0
Lane Group Flow (vph)	145	1300	137	200	1400	135	205	190	16	225	339	0
Heavy Vehicles (%)	0%	0%	0%	0%	9%	0%	0%	0%	0%	0%	0%	0%
Turn Type	Prot		Perm	Prot		Perm	Prot		Perm	Prot		
Protected Phases	5	2		1	6		7	4		3	8	
Permitted Phases			2			6			4			
Actuated Green, G (s)	10.4	49.7	49.7	15.1	54.4	54.4	14.5	15.3	15.3	22.0	22.8	
Effective Green, g (s)	10.4	51.1	51.1	15.1	55.8	55.8	14.5	15.8	15.8	22.0	23.3	
Actuated g/C Ratio	0.09	0.43	0.43	0.13	0.46	0.46	0.12	0.13	0.13	0.18	0.19	
Clearance Time (s)	4.0	5.4	5.4	4.0	5.4	5.4	4.0	4.5	4.5	4.0	4.5	
Vehicle Extension (s)	2.3	4.5	4.5	2.3	4.5	4.5	2.3	2.3	2.3	2.3	2.3	
Lane Grp Cap (vph)	156	1537	688	227	1540	751	218	250	213	331	354	
v/s Ratio Prot	0.08	c0.36		0.11	c0.42		c0.11	0.10		0.12	c0.19	
v/s Ratio Perm			0.08			0.08			0.01			
v/c Ratio	0.93	0.85	0.20	0.88	0.91	0.18	0.94	0.76	0.07	0.68	0.96	
Uniform Delay, d1	54.4	30.9	21.6	51.6	29.7	18.7	52.3	50.3	45.7	45.7	47.9	
Progression Factor	1.20	0.27	0.15	1.00	1.00	1.00	1.00	1.00	1.00	1.00	1.00	
Incremental Delay, d2	43.4	4.7	0.5	30.0	9.5	0.5	44.2	11.9	0.1	4.7	36.1	
Delay (s)	108.7	13.0	3.7	81.5	39.2	19.3	96.5	62.2	45.8	50.4	84.0	
Level of Service	F	B	A	F	D	B	F	E	D	D	F	
Approach Delay (s)		20.0			42.1			72.0			70.8	
Approach LOS		B			D			E			E	

Intersection Summary			
HCM Average Control Delay	41.0	HCM Level of Service	D
HCM Volume to Capacity ratio	0.93		
Actuated Cycle Length (s)	120.0	Sum of lost time (s)	16.0
Intersection Capacity Utilization	90.9%	ICU Level of Service	E
Analysis Period (min)	15		

c Critical Lane Group

Movement	EBL	EBT	EBR	WBL	WBT	WBR	NBL	NBT	NBR	SBL	SBT	SBR
Lane Configurations												
Volume (vph)	180	1180	365	385	1450	140	300	610	150	210	710	160
Ideal Flow (vphpl)	1900	1900	1900	1900	1900	1900	1900	1900	1900	1900	1900	1900
Total Lost time (s)	4.0	4.0	3.5	4.0	4.0		4.0	4.0	4.0	4.0	4.0	3.0
Lane Util. Factor	0.97	0.95	1.00	0.97	0.95		0.97	0.95	1.00	0.97	0.95	1.00
Frt	1.00	1.00	0.85	1.00	0.99		1.00	1.00	0.85	1.00	1.00	0.85
Flt Protected	0.95	1.00	1.00	0.95	1.00		0.95	1.00	1.00	0.95	1.00	1.00
Satd. Flow (prot)	3467	3610	1615	3502	3530		3502	3610	1615	3502	3574	1615
Flt Permitted	0.95	1.00	1.00	0.95	1.00		0.95	1.00	1.00	0.95	1.00	1.00
Satd. Flow (perm)	3467	3610	1615	3502	3530		3502	3610	1615	3502	3574	1615
Peak-hour factor, PHF	1.00	1.00	1.00	1.00	1.00	1.00	1.00	1.00	1.00	1.00	1.00	1.00
Adj. Flow (vph)	180	1180	365	385	1450	140	300	610	150	210	710	160
RTOR Reduction (vph)	0	0	10	0	6	0	0	0	19	0	0	12
Lane Group Flow (vph)	180	1180	355	385	1584	0	300	610	131	210	710	148
Heavy Vehicles (%)	1%	0%	0%	0%	1%	0%	0%	0%	0%	0%	1%	0%
Turn Type	Prot		pm+ov	Prot			Prot		pm+ov	Prot		pm+ov
Protected Phases	5	2	3	1	6		3	8	1	7	4	5
Permitted Phases			2						8			4
Actuated Green, G (s)	8.9	52.6	65.8	17.1	60.8		13.2	29.7	46.8	11.8	28.3	37.2
Effective Green, g (s)	8.4	53.1	65.8	16.6	61.3		12.7	30.2	45.8	11.3	28.8	38.2
Actuated g/C Ratio	0.07	0.42	0.52	0.13	0.48		0.10	0.24	0.36	0.09	0.23	0.30
Clearance Time (s)	3.5	4.5	3.5	3.5	4.5		3.5	4.5	3.5	3.5	4.5	3.5
Vehicle Extension (s)	2.3	4.3	2.3	2.3	4.3		2.3	2.3	2.3	2.3	2.3	2.3
Lane Grp Cap (vph)	229	1507	835	457	1701		350	857	582	311	809	485
v/s Ratio Prot	0.05	0.33	0.04	c0.11	c0.45		c0.09	0.17	0.03	0.06	c0.20	0.02
v/s Ratio Perm			0.18						0.05			0.07
v/c Ratio	0.79	0.78	0.42	0.84	0.93		0.86	0.71	0.22	0.68	0.88	0.31
Uniform Delay, d1	58.5	32.1	19.0	54.0	31.0		56.4	44.5	28.3	56.2	47.5	34.3
Progression Factor	1.00	1.00	1.00	1.00	1.00		1.00	1.00	1.00	1.00	1.00	1.00
Incremental Delay, d2	15.4	4.1	0.2	12.9	10.7		17.9	2.5	0.1	4.9	10.4	0.2
Delay (s)	73.9	36.2	19.2	66.9	41.6		74.3	47.0	28.5	61.1	57.9	34.5
Level of Service	E	D	B	E	D		E	D	C	E	E	C
Approach Delay (s)		36.5			46.6			52.1			55.1	
Approach LOS		D			D			D			E	

Intersection Summary			
HCM Average Control Delay	46.2	HCM Level of Service	D
HCM Volume to Capacity ratio	0.88		
Actuated Cycle Length (s)	127.2	Sum of lost time (s)	12.0
Intersection Capacity Utilization	91.2%	ICU Level of Service	F
Analysis Period (min)	15		

c Critical Lane Group

Movement	WBL	WBR	NBT	NBR	SBL	SBT
Lane Configurations						
Volume (veh/h)	30	40	465	20	80	920
Sign Control	Stop		Free			Free
Grade	0%		0%			0%
Peak Hour Factor	1.00	1.00	1.00	1.00	1.00	1.00
Hourly flow rate (vph)	30	40	465	20	80	920
Pedestrians						
Lane Width (ft)						
Walking Speed (ft/s)						
Percent Blockage						
Right turn flare (veh)						
Median type			None			None
Median storage veh)						
Upstream signal (ft)						
pX, platoon unblocked						
vC, conflicting volume	1555	475			485	
vC1, stage 1 conf vol						
vC2, stage 2 conf vol						
vCu, unblocked vol	1555	475			485	
tC, single (s)	6.4	6.2			4.1	
tC, 2 stage (s)						
tF (s)	3.5	3.3			2.2	
p0 queue free %	74	93			93	
cM capacity (veh/h)	116	592			1083	

Direction, Lane #	WB 1	NB 1	SB 1	SB 2
Volume Total	70	485	80	920
Volume Left	30	0	80	0
Volume Right	40	20	0	0
cSH	214	1700	1083	1700
Volume to Capacity	0.33	0.29	0.07	0.54
Queue Length 95th (ft)	34	0	6	0
Control Delay (s)	29.7	0.0	8.6	0.0
Lane LOS	D		A	
Approach Delay (s)	29.7	0.0	0.7	
Approach LOS	D			

Intersection Summary			
Average Delay	1.8		
Intersection Capacity Utilization	60.0%	ICU Level of Service	B
Analysis Period (min)	15		

Movement	WBL	WBR	NBT	NBR	SBL	SBT
Lane Configurations						
Volume (veh/h)	10	30	455	10	105	845
Sign Control	Stop		Free			Free
Grade	0%		0%			0%
Peak Hour Factor	1.00	1.00	1.00	1.00	1.00	1.00
Hourly flow rate (vph)	10	30	455	10	105	845
Pedestrians						
Lane Width (ft)						
Walking Speed (ft/s)						
Percent Blockage						
Right turn flare (veh)						
Median type			None			None
Median storage veh)						
Upstream signal (ft)						
pX, platoon unblocked						
vC, conflicting volume	1515	460			465	
vC1, stage 1 conf vol						
vC2, stage 2 conf vol						
vCu, unblocked vol	1515	460			465	
tC, single (s)	6.4	6.2			4.1	
tC, 2 stage (s)						
tF (s)	3.5	3.3			2.2	
p0 queue free %	92	95			90	
cM capacity (veh/h)	120	603			1102	

Direction, Lane #	WB 1	WB 2	NB 1	SB 1	SB 2
Volume Total	10	30	465	105	845
Volume Left	10	0	0	105	0
Volume Right	0	30	10	0	0
cSH	120	603	1700	1102	1700
Volume to Capacity	0.08	0.05	0.27	0.10	0.50
Queue Length 95th (ft)	7	4	0	8	0
Control Delay (s)	37.8	11.3	0.0	8.6	0.0
Lane LOS	E	B		A	
Approach Delay (s)	17.9		0.0	1.0	
Approach LOS	C				

Intersection Summary			
Average Delay	1.1		
Intersection Capacity Utilization	54.9%	ICU Level of Service	A
Analysis Period (min)	15		

Movement	WBL	WBR	NBT	NBR	SBL	SBT
Lane Configurations						
Volume (veh/h)	10	70	445	40	200	655
Sign Control	Stop		Free			Free
Grade	0%		0%			0%
Peak Hour Factor	1.00	1.00	1.00	1.00	1.00	1.00
Hourly flow rate (vph)	10	70	445	40	200	655
Pedestrians						
Lane Width (ft)						
Walking Speed (ft/s)						
Percent Blockage						
Right turn flare (veh)						
Median type			TWLTL			TWLTL
Median storage veh)			2			2
Upstream signal (ft)						
pX, platoon unblocked						
vC, conflicting volume	1520	465			485	
vC1, stage 1 conf vol	465					
vC2, stage 2 conf vol	1055					
vCu, unblocked vol	1520	465			485	
tC, single (s)	6.4	6.2			4.1	
tC, 2 stage (s)	5.4					
tF (s)	3.5	3.3			2.2	
p0 queue free %	96	88			82	
cM capacity (veh/h)	256	599			1083	

Direction, Lane #	WB 1	NB 1	SB 1	SB 2
Volume Total	80	485	200	655
Volume Left	10	0	200	0
Volume Right	70	40	0	0
cSH	513	1700	1083	1700
Volume to Capacity	0.16	0.29	0.18	0.39
Queue Length 95th (ft)	14	0	17	0
Control Delay (s)	13.3	0.0	9.1	0.0
Lane LOS	B		A	
Approach Delay (s)	13.3	0.0	2.1	
Approach LOS	B			

Intersection Summary			
Average Delay	2.0		
Intersection Capacity Utilization	53.1%	ICU Level of Service	A
Analysis Period (min)	15		

Movement	EBL	EBT	EBR	WBL	WBT	WBR	NBL	NBT	NBR	SBL	SBT	SBR
Lane Configurations												
Volume (veh/h)	60	25	375	5	20	15	180	465	30	20	625	40
Sign Control		Stop			Stop			Free			Free	
Grade		0%			0%			0%			0%	
Peak Hour Factor	1.00	1.00	1.00	1.00	1.00	1.00	1.00	1.00	1.00	1.00	1.00	1.00
Hourly flow rate (vph)	60	25	375	5	20	15	180	465	30	20	625	40
Pedestrians												
Lane Width (ft)												
Walking Speed (ft/s)												
Percent Blockage												
Right turn flare (veh)			6									
Median type								None			TWLTL	
Median storage veh)											2	
Upstream signal (ft)								1262				
pX, platoon unblocked												
vC, conflicting volume	1535	1540	645	1705	1545	480	665			495		
vC1, stage 1 conf vol	685	685		840	840							
vC2, stage 2 conf vol	850	855		865	705							
vCu, unblocked vol	1535	1540	645	1705	1545	480	665			495		
tC, single (s)	7.1	6.5	6.2	7.1	6.5	6.2	4.1			4.1		
tC, 2 stage (s)	6.1	5.5		6.1	5.5							
tF (s)	3.5	4.0	3.3	3.5	4.0	3.3	2.2			2.2		
p0 queue free %	72	90	21	58	90	97	81			98		
cM capacity (veh/h)	214	246	474	12	209	588	929			1074		

Direction, Lane #	EB 1	WB 1	NB 1	NB 2	SB 1	SB 2
Volume Total	460	40	180	495	20	665
Volume Left	60	5	180	0	20	0
Volume Right	375	15	0	30	0	40
cSH	581	73	929	1700	1074	1700
Volume to Capacity	0.79	0.55	0.19	0.29	0.02	0.39
Queue Length 95th (ft)	189	58	18	0	1	0
Control Delay (s)	34.7	102.1	9.8	0.0	8.4	0.0
Lane LOS	D	F	A		A	
Approach Delay (s)	34.7	102.1	2.6		0.2	
Approach LOS	D	F				

Intersection Summary			
Average Delay	11.8		
Intersection Capacity Utilization	71.9%	ICU Level of Service	C
Analysis Period (min)	15		

Movement	EBL	EBT	EBR	WBL	WBT	WBR	NBL	NBT	NBR	SBL	SBT	SBR
Lane Configurations												
Volume (vph)	155	400	20	50	475	335	5	185	65	270	525	210
Ideal Flow (vphpl)	1900	1900	1900	1900	1900	1900	1900	1900	1900	1900	1900	1900
Total Lost time (s)	4.0	4.0		4.0	4.0	4.0	4.0	4.0		4.0	4.0	
Lane Util. Factor	1.00	1.00		1.00	1.00	1.00	1.00	1.00		1.00	1.00	
Frt	1.00	0.99		1.00	1.00	0.85	1.00	0.96		1.00	0.96	
Flt Protected	0.95	1.00		0.95	1.00	1.00	0.95	1.00		0.95	1.00	
Satd. Flow (prot)	1805	1886		1805	1900	1615	1805	1826		1805	1819	
Flt Permitted	0.95	1.00		0.95	1.00	1.00	0.95	1.00		0.95	1.00	
Satd. Flow (perm)	1805	1886		1805	1900	1615	1805	1826		1805	1819	
Peak-hour factor, PHF	1.00	1.00	1.00	1.00	1.00	1.00	1.00	1.00	1.00	1.00	1.00	1.00
Adj. Flow (vph)	155	400	20	50	475	335	5	185	65	270	525	210
RTOR Reduction (vph)	0	1	0	0	0	176	0	10	0	0	12	0
Lane Group Flow (vph)	155	419	0	50	475	159	5	240	0	270	723	0
Heavy Vehicles (%)	0%	0%	0%	0%	0%	0%	0%	0%	0%	0%	0%	0%
Turn Type	Prot			Prot		Perm	Prot			Prot		
Protected Phases	5	2		1	6		3	8		7	4	
Permitted Phases						6						
Actuated Green, G (s)	10.2	36.4		3.8	30.0	30.0	0.9	26.2		20.2	45.5	
Effective Green, g (s)	12.2	38.4		5.8	32.0	32.0	2.9	28.2		22.2	47.5	
Actuated g/C Ratio	0.11	0.35		0.05	0.29	0.29	0.03	0.25		0.20	0.43	
Clearance Time (s)	6.0	6.0		6.0	6.0	6.0	6.0	6.0		6.0	6.0	
Vehicle Extension (s)	2.4	2.7		2.7	2.7	2.7	2.6	2.5		2.6	2.5	
Lane Grp Cap (vph)	199	655		95	550	467	47	466		362	781	
v/s Ratio Prot	c0.09	0.22		0.03	c0.25		0.00	0.13		c0.15	c0.40	
v/s Ratio Perm						0.10						
v/c Ratio	0.78	0.64		0.53	0.86	0.34	0.11	0.51		0.75	0.93	
Uniform Delay, d1	47.9	30.3		51.1	37.2	31.0	52.6	35.3		41.5	29.9	
Progression Factor	1.00	1.00		1.00	1.00	1.00	1.00	1.00		1.00	1.00	
Incremental Delay, d2	16.5	1.9		4.5	13.2	0.4	0.8	0.7		7.8	16.7	
Delay (s)	64.4	32.2		55.5	50.4	31.3	53.4	36.0		49.3	46.6	
Level of Service	E	C		E	D	C	D	D		D	D	
Approach Delay (s)		40.9			43.3			36.4			47.3	
Approach LOS		D			D			D			D	

Intersection Summary			
HCM Average Control Delay	43.6	HCM Level of Service	D
HCM Volume to Capacity ratio	0.89		
Actuated Cycle Length (s)	110.6	Sum of lost time (s)	16.0
Intersection Capacity Utilization	91.5%	ICU Level of Service	F
Analysis Period (min)	15		

c Critical Lane Group

Movement	EBL	EBT	EBR	WBL	WBT	WBR	NBL	NBT	NBR	SBL	SBT	SBR
Lane Configurations												
Volume (vph)	140	660	5	5	870	365	5	5	5	210	5	110
Ideal Flow (vphpl)	1900	1900	1900	1900	1900	1900	1900	1900	1900	1900	1900	1900
Total Lost time (s)	4.0	4.0		4.0	4.0	6.5		4.0			4.0	4.0
Lane Util. Factor	1.00	0.95		1.00	1.00	1.00		1.00			1.00	1.00
Frt	1.00	1.00		1.00	1.00	0.85		0.95			1.00	0.85
Flt Protected	0.95	1.00		0.95	1.00	1.00		0.98			0.95	1.00
Satd. Flow (prot)	1805	3606		1805	1900	1615		1785			1812	1615
Flt Permitted	0.95	1.00		0.95	1.00	1.00		0.99			0.95	1.00
Satd. Flow (perm)	1805	3606		1805	1900	1615		1792			1812	1615
Peak-hour factor, PHF	1.00	1.00	1.00	1.00	1.00	1.00	1.00	1.00	1.00	1.00	1.00	1.00
Adj. Flow (vph)	140	660	5	5	870	365	5	5	5	210	5	110
RTOR Reduction (vph)	0	0	0	0	0	164	0	5	0	0	0	91
Lane Group Flow (vph)	140	665	0	5	870	201	0	10	0	0	215	19
Heavy Vehicles (%)	0%	0%	0%	0%	0%	0%	0%	0%	0%	0%	0%	0%
Turn Type	Prot			Prot		Perm	Perm			Split		Perm
Protected Phases	5	2		1	6			8		4	4	
Permitted Phases						6	8					4
Actuated Green, G (s)	6.2	50.6		0.9	44.3	44.3		1.7			13.7	13.7
Effective Green, g (s)	8.2	52.6		1.9	46.3	43.8		2.7			15.7	15.7
Actuated g/C Ratio	0.09	0.59		0.02	0.52	0.49		0.03			0.18	0.18
Clearance Time (s)	6.0	6.0		5.0	6.0	6.0		5.0			6.0	6.0
Vehicle Extension (s)	2.4	2.7		2.4	2.7	2.7		2.5			2.5	2.5
Lane Grp Cap (vph)	166	2134		39	990	796		54			320	285
v/s Ratio Prot	c0.08	0.18		0.00	c0.46						c0.12	
v/s Ratio Perm						0.12		c0.01				0.01
v/c Ratio	0.84	0.31		0.13	0.88	0.25		0.19			0.67	0.07
Uniform Delay, d1	39.7	9.1		42.7	18.8	13.1		42.0			34.2	30.5
Progression Factor	1.00	1.00		1.00	1.00	1.00		1.00			1.00	1.00
Incremental Delay, d2	29.9	0.1		1.0	8.9	0.1		1.2			5.0	0.1
Delay (s)	69.6	9.2		43.7	27.8	13.2		43.3			39.2	30.6
Level of Service	E	A		D	C	B		D			D	C
Approach Delay (s)		19.7			23.5			43.3			36.3	
Approach LOS		B			C			D			D	

Intersection Summary			
HCM Average Control Delay	24.1	HCM Level of Service	C
HCM Volume to Capacity ratio	0.80		
Actuated Cycle Length (s)	88.9	Sum of lost time (s)	16.0
Intersection Capacity Utilization	82.1%	ICU Level of Service	E
Analysis Period (min)	15		

c Critical Lane Group

Movement	EBL	EBT	EBR	WBL	WBT	WBR	NBL	NBT	NBR	SBL	SBT	SBR
Lane Configurations												
Volume (vph)	155	605	170	150	1000	110	230	365	65	180	695	335
Ideal Flow (vphpl)	1900	1900	1900	1900	1900	1900	1900	1900	1900	1900	1900	1900
Total Lost time (s)	4.0	4.0		4.0	4.0		4.0	5.0		4.0	4.0	
Lane Util. Factor	1.00	0.95		1.00	0.95		1.00	0.95		1.00	0.95	
Frt	1.00	0.97		1.00	0.99		1.00	0.98		1.00	0.95	
Flt Protected	0.95	1.00		0.95	1.00		0.95	1.00		0.95	1.00	
Satd. Flow (prot)	1805	3491		1805	3556		1805	3528		1805	3434	
Flt Permitted	0.95	1.00		0.95	1.00		0.95	1.00		0.95	1.00	
Satd. Flow (perm)	1805	3491		1805	3556		1805	3528		1805	3434	
Peak-hour factor, PHF	1.00	1.00	1.00	1.00	1.00	1.00	1.00	1.00	1.00	1.00	1.00	1.00
Adj. Flow (vph)	155	605	170	150	1000	110	230	365	65	180	695	335
RTOR Reduction (vph)	0	22	0	0	7	0	0	12	0	0	49	0
Lane Group Flow (vph)	155	753	0	150	1103	0	230	418	0	180	981	0
Heavy Vehicles (%)	0%	0%	0%	0%	0%	0%	0%	0%	0%	0%	0%	0%
Turn Type	Prot			Prot			Prot			Prot		
Protected Phases	5	2		1	6		3	8		7	4	
Permitted Phases												
Actuated Green, G (s)	10.0	36.8		11.6	38.4		15.0	33.1		15.9	34.0	
Effective Green, g (s)	11.0	37.3		12.6	38.9		16.0	32.6		16.9	34.5	
Actuated g/C Ratio	0.09	0.32		0.11	0.33		0.14	0.28		0.15	0.30	
Clearance Time (s)	5.0	4.5		5.0	4.5		5.0	4.5		5.0	4.5	
Vehicle Extension (s)	3.0	1.0		3.0	1.0		3.0	1.0		3.0	1.0	
Lane Grp Cap (vph)	171	1119		195	1188		248	988		262	1018	
v/s Ratio Prot	c0.09	0.22		0.08	c0.31		c0.13	0.12		0.10	c0.29	
v/s Ratio Perm												
v/c Ratio	0.91	0.67		0.77	0.93		0.93	0.42		0.69	0.96	
Uniform Delay, d1	52.2	34.3		50.5	37.4		49.6	34.2		47.2	40.3	
Progression Factor	1.00	1.00		1.00	1.00		1.00	1.00		1.00	1.00	
Incremental Delay, d2	42.6	1.3		16.6	12.2		37.6	0.1		7.3	19.8	
Delay (s)	94.8	35.5		67.0	49.6		87.2	34.3		54.5	60.1	
Level of Service	F	D		E	D		F	C		D	E	
Approach Delay (s)		45.4			51.7			52.8			59.3	
Approach LOS		D			D			D			E	

Intersection Summary			
HCM Average Control Delay	52.7	HCM Level of Service	D
HCM Volume to Capacity ratio	0.87		
Actuated Cycle Length (s)	116.4	Sum of lost time (s)	8.0
Intersection Capacity Utilization	95.7%	ICU Level of Service	F
Analysis Period (min)	15		

c Critical Lane Group

General & Site Information

Analyst:	CMG
Agency/Company:	David Evans and Associates, Inc.
Date:	7/16/2012
Project Name:	South Hillsboro Focus Area Plan
Intersection:	Alexander at Brookwood
Analysis Time Period:	PM Peak Hour
Jurisdiction:	City of Hillsboro
Year:	2035 without SoHi

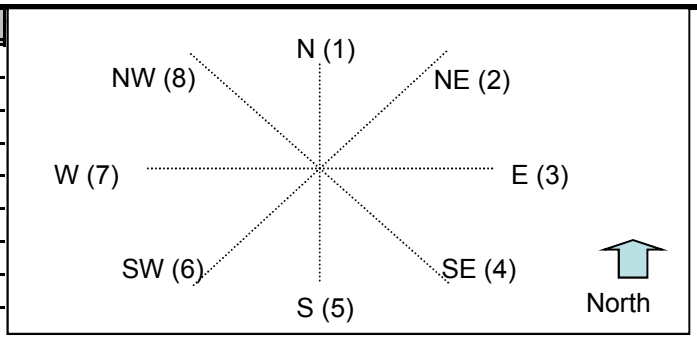

Volumes		Roundabout Approach/Entry Legs							
		N (1)	NE (2)	E (3)	SE (4)	S (5)	SW (6)	W (7)	NW (8)
Input Volumes to Leg #	N (1), vph	235		100		85		35	
	NE (2), vph								
	E (3), vph	90				35		30	
	SE (4), vph								
	S (5), vph	245		25				5	
	SW (6), vph								
	W (7), vph	105		40		5			
	NW (8), vph								
Output	Total Vehicles	675	0	165	0	125	0	70	0

Volume Characteristics	N	NE	E	SE	S	SW	W	NW
% Trucks	0.0	0.0	0.0	0.0	0.0	0.0	0.0	0.0
E_t	2.0	2.0	2.0	2.0	2.0	2.0	2.0	2.0
PHF	1.00	1.00	1.00	1.00	1.00	1.00	1.00	1.00
F_{HV}	1.000	1.000	1.000	1.000	1.000	1.000	1.000	1.000

Entry/Conflicting Flows	N	NE	E	SE	S	SW	W	NW
Flow to Leg # N (1), pcu/h	235	0	100	0	85	0	35	0
NE (2), pcu/h	0	0	0	0	0	0	0	0
E (3), pcu/h	90	0	0	0	35	0	30	0
SE (4), pcu/h	0	0	0	0	0	0	0	0
S (5), pcu/h	245	0	25	0	0	0	5	0
SW (6), pcu/h	0	0	0	0	0	0	0	0
W (7), pcu/h	105	0	40	0	5	0	0	0
NW (8), pcu/h	0	0	0	0	0	0	0	0
Entry flow, pcu/h	675	0	165	0	125	0	70	0
Conflicting flow, pcu/h	70	525	360	515	390	665	595	745

Results	N	NE	E	SE	S	SW	W	NW
Entry Capacity, pcu/h	1054	NA	788	NA	765	NA	623	NA
Leg v/c ratio	0.64		0.21		0.16		0.11	
Control Delay, s/pcu	9.3		5.8		5.6		6.5	
LOS	A		A		A		A	
95th Percentile Queue (ft)	1041	0	254	0	193	0	108	0

Appendix G: 2035 Traffic Operations with South Hillsboro

Movement	EBL	EBT	EBR	WBL	WBT	WBR	NBL	NBT	NBR	SBL	SBT	SBR
Lane Configurations												
Volume (vph)	5	905	250	115	1355	45	405	95	155	60	70	5
Ideal Flow (vphpl)	1900	1900	1900	1900	1900	1900	1900	1900	1900	1900	1900	1900
Total Lost time (s)	4.0	4.0		4.0	4.0		3.0	4.0		3.0	4.0	
Lane Util. Factor	1.00	0.95		1.00	0.95		0.97	1.00		1.00	1.00	
Frt	1.00	0.97		1.00	1.00		1.00	0.91		1.00	0.99	
Flt Protected	0.95	1.00		0.95	1.00		0.95	1.00		0.95	1.00	
Satd. Flow (prot)	1805	3458		1805	3587		3502	1617		1770	1864	
Flt Permitted	0.09	1.00		0.17	1.00		0.95	1.00		0.95	1.00	
Satd. Flow (perm)	164	3458		321	3587		3502	1617		1770	1864	
Peak-hour factor, PHF	1.00	1.00	1.00	1.00	1.00	1.00	1.00	1.00	1.00	1.00	1.00	1.00
Adj. Flow (vph)	5	905	250	115	1355	45	405	95	155	60	70	5
RTOR Reduction (vph)	0	21	0	0	2	0	0	68	0	0	3	0
Lane Group Flow (vph)	5	1134	0	115	1398	0	405	182	0	60	72	0
Heavy Vehicles (%)	0%	1%	1%	0%	0%	5%	0%	1%	10%	2%	1%	0%
Turn Type	pm+pt			pm+pt			Prot			Prot		
Protected Phases	5	2		1	6		3	8		7	4	
Permitted Phases	2			6								
Actuated Green, G (s)	51.1	51.1		60.0	59.5		11.0	18.2		4.0	11.2	
Effective Green, g (s)	51.1	51.6		60.0	60.0		12.0	19.2		5.0	12.2	
Actuated g/C Ratio	0.51	0.52		0.60	0.60		0.12	0.19		0.05	0.12	
Clearance Time (s)	4.0	4.5		4.0	4.5		4.0	5.0		4.0	5.0	
Vehicle Extension (s)	2.3	4.3		2.3	4.3		2.5	2.5		2.5	2.5	
Lane Grp Cap (vph)	97	1784		329	2152		420	310		89	227	
v/s Ratio Prot	0.00	c0.33		0.03	c0.39		c0.12	c0.11		0.03	0.04	
v/s Ratio Perm	0.03			0.18								
v/c Ratio	0.05	0.64		0.35	0.65		0.96	0.59		0.67	0.32	
Uniform Delay, d1	15.9	17.4		20.7	13.1		43.8	36.8		46.7	40.1	
Progression Factor	1.00	1.00		2.21	2.43		1.00	1.00		1.00	1.00	
Incremental Delay, d2	0.1	1.7		0.2	0.8		34.5	2.4		16.7	0.6	
Delay (s)	16.0	19.2		46.1	32.6		78.2	39.1		63.4	40.7	
Level of Service	B	B		D	C		E	D		E	D	
Approach Delay (s)		19.2			33.6			63.3			50.8	
Approach LOS		B			C			E			D	

Intersection Summary			
HCM Average Control Delay	35.1	HCM Level of Service	D
HCM Volume to Capacity ratio	0.68		
Actuated Cycle Length (s)	100.0	Sum of lost time (s)	11.0
Intersection Capacity Utilization	75.4%	ICU Level of Service	D
Analysis Period (min)	15		

c Critical Lane Group

Movement	EBL	EBT	EBR	WBL	WBT	WBR	NBL	NBT	NBR	SBL	SBT	SBR
Lane Configurations												
Volume (vph)	40	230	200	65	525	200	155	375	70	135	225	30
Ideal Flow (vphpl)	1900	1900	1900	1900	1900	1900	1900	1900	1900	1900	1900	1900
Total Lost time (s)	4.0	4.0		4.0	4.0		4.0	4.0	5.5	4.0	4.0	
Lane Util. Factor	1.00	1.00		1.00	1.00		1.00	1.00	1.00	1.00	1.00	
Frt	1.00	0.93		1.00	0.96		1.00	1.00	0.85	1.00	0.98	
Flt Protected	0.95	1.00		0.95	1.00		0.95	1.00	1.00	0.95	1.00	
Satd. Flow (prot)	1805	1751		1805	1821		1805	1900	1615	1805	1850	
Flt Permitted	0.95	1.00		0.95	1.00		0.95	1.00	1.00	0.95	1.00	
Satd. Flow (perm)	1805	1751		1805	1821		1805	1900	1615	1805	1850	
Peak-hour factor, PHF	1.00	1.00	1.00	1.00	1.00	1.00	1.00	1.00	1.00	1.00	1.00	1.00
Adj. Flow (vph)	40	230	200	65	525	200	155	375	70	135	225	30
RTOR Reduction (vph)	0	37	0	0	16	0	0	0	52	0	6	0
Lane Group Flow (vph)	40	393	0	65	709	0	155	375	18	135	249	0
Heavy Vehicles (%)	0%	0%	2%	0%	0%	0%	0%	0%	0%	0%	1%	0%
Turn Type	Prot			Prot			Prot		Perm	Prot		
Protected Phases	5	2		1	6		7	4		3	8	
Permitted Phases									4			
Actuated Green, G (s)	2.7	30.0		5.4	32.5		9.2	18.2	18.2	7.0	15.9	
Effective Green, g (s)	4.2	31.0		6.9	33.7		10.8	19.2	17.7	8.6	17.0	
Actuated g/C Ratio	0.05	0.38		0.08	0.41		0.13	0.24	0.22	0.11	0.21	
Clearance Time (s)	5.5	5.0		5.5	5.2		5.6	5.0	5.0	5.6	5.1	
Vehicle Extension (s)	3.1	2.5		3.1	2.5		2.9	2.5	2.5	2.9	2.5	
Lane Grp Cap (vph)	93	664		152	751		239	447	350	190	385	
v/s Ratio Prot	0.02	0.22		c0.04	c0.39		c0.09	c0.20		0.07	0.13	
v/s Ratio Perm									0.01			
v/c Ratio	0.43	0.59		0.43	0.94		0.65	0.84	0.05	0.71	0.65	
Uniform Delay, d1	37.6	20.3		35.5	23.1		33.6	29.8	25.4	35.3	29.6	
Progression Factor	1.00	1.00		1.00	1.00		1.00	1.00	1.00	1.00	1.00	
Incremental Delay, d2	3.3	1.2		2.0	20.3		5.8	12.7	0.0	11.7	3.3	
Delay (s)	40.9	21.5		37.5	43.4		39.5	42.5	25.4	47.0	32.9	
Level of Service	D	C		D	D		D	D	C	D	C	
Approach Delay (s)		23.1			42.9			39.7			37.8	
Approach LOS		C			D			D			D	

Intersection Summary			
HCM Average Control Delay	37.0	HCM Level of Service	D
HCM Volume to Capacity ratio	0.82		
Actuated Cycle Length (s)	81.7	Sum of lost time (s)	12.0
Intersection Capacity Utilization	84.5%	ICU Level of Service	E
Analysis Period (min)	15		

c Critical Lane Group

Movement	EBL	EBT	EBR	WBL	WBT	WBR	NBL	NBT	NBR	SBL	SBT	SBR
Lane Configurations												
Volume (vph)	120	820	65	115	1295	65	150	315	145	105	210	50
Ideal Flow (vphpl)	1900	1900	1900	1900	1900	1900	1900	1900	1900	1900	1900	1900
Total Lost time (s)	4.0	4.0		4.0	4.0	4.0		4.0	4.0	4.0	4.0	4.0
Lane Util. Factor	1.00	0.95		1.00	0.95	1.00		0.95	1.00	1.00	1.00	1.00
Frt	1.00	0.99		1.00	1.00	0.85		1.00	0.85	1.00	1.00	0.85
Flt Protected	0.95	1.00		0.95	1.00	1.00		0.98	1.00	0.95	1.00	1.00
Satd. Flow (prot)	1805	3521		1626	3574	1615		3518	1495	1805	1900	1583
Flt Permitted	0.95	1.00		0.95	1.00	1.00		0.98	1.00	0.95	1.00	1.00
Satd. Flow (perm)	1805	3521		1626	3574	1615		3518	1495	1805	1900	1583
Peak-hour factor, PHF	1.00	1.00	1.00	1.00	1.00	1.00	1.00	1.00	1.00	1.00	1.00	1.00
Adj. Flow (vph)	120	820	65	115	1295	65	150	315	145	105	210	50
RTOR Reduction (vph)	0	6	0	0	0	28	0	0	120	0	0	34
Lane Group Flow (vph)	120	879	0	115	1295	37	0	465	25	105	210	16
Heavy Vehicles (%)	0%	0%	8%	11%	1%	0%	1%	1%	8%	0%	0%	2%
Bus Blockages (#/hr)	0	4	4	0	0	0	0	0	0	0	0	0
Turn Type	Prot			Prot		Perm	Split		Perm	Split		custom
Protected Phases	5	2		1	6		4	4		8	8	
Permitted Phases						6			4			8 5
Actuated Green, G (s)	12.5	36.1		15.3	38.9	38.9		17.0	17.0	15.1	15.1	31.6
Effective Green, g (s)	12.5	36.6		15.3	39.4	39.4		17.0	17.0	15.1	15.1	31.6
Actuated g/C Ratio	0.12	0.37		0.15	0.39	0.39		0.17	0.17	0.15	0.15	0.32
Clearance Time (s)	4.0	4.5		4.0	4.5	4.5		4.0	4.0	4.0	4.0	
Vehicle Extension (s)	2.3	4.3		2.3	4.3	4.3		2.3	2.3	2.3	2.3	
Lane Grp Cap (vph)	226	1289		249	1408	636		598	254	273	287	500
v/s Ratio Prot	c0.07	0.25		0.07	c0.36			c0.13		0.06	c0.11	
v/s Ratio Perm						0.02			0.02			0.01
v/c Ratio	0.53	0.68		0.46	0.92	0.06		0.78	0.10	0.38	0.73	0.03
Uniform Delay, d1	41.0	26.8		38.6	28.8	18.8		39.7	35.0	38.3	40.5	23.6
Progression Factor	1.03	1.27		1.00	1.00	1.00		1.00	1.00	1.00	1.00	1.00
Incremental Delay, d2	1.3	2.4		0.8	11.2	0.2		6.0	0.1	0.5	8.5	0.0
Delay (s)	43.4	36.5		39.4	40.0	19.0		45.6	35.1	38.8	49.0	23.6
Level of Service	D	D		D	D	B		D	D	D	D	C
Approach Delay (s)		37.3			39.0			43.1			42.6	
Approach LOS		D			D			D			D	

Intersection Summary			
HCM Average Control Delay	39.6	HCM Level of Service	D
HCM Volume to Capacity ratio	0.80		
Actuated Cycle Length (s)	100.0	Sum of lost time (s)	16.0
Intersection Capacity Utilization	79.9%	ICU Level of Service	D
Analysis Period (min)	15		
c Critical Lane Group			

Movement	EBL	EBT	EBR	WBL	WBT	WBR	NBL	NBT	NBR	SBL	SBT	SBR
Lane Configurations												
Volume (vph)	80	1005	85	160	1400	165	220	450	345	200	195	160
Ideal Flow (vphpl)	1900	1900	1900	1900	1900	1900	1900	1900	1900	1900	1900	1900
Total Lost time (s)	4.0	4.0	4.0	4.0	4.0	4.0	4.0	4.0	4.5	4.0	4.0	
Lane Util. Factor	1.00	0.95	1.00	1.00	0.95	1.00	1.00	0.95	1.00	1.00	0.95	
Frt	1.00	1.00	0.85	1.00	1.00	0.85	1.00	1.00	0.85	1.00	0.93	
Flt Protected	0.95	1.00	1.00	0.95	1.00	1.00	0.95	1.00	1.00	0.95	1.00	
Satd. Flow (prot)	1805	3511	1615	1736	3546	1615	1805	3610	1615	1805	3351	
Flt Permitted	0.95	1.00	1.00	0.95	1.00	1.00	0.95	1.00	1.00	0.95	1.00	
Satd. Flow (perm)	1805	3511	1615	1736	3546	1615	1805	3610	1615	1805	3351	
Peak-hour factor, PHF	1.00	1.00	1.00	1.00	1.00	1.00	1.00	1.00	1.00	1.00	1.00	1.00
Adj. Flow (vph)	80	1005	85	160	1400	165	220	450	345	200	195	160
RTOR Reduction (vph)	0	0	45	0	0	79	0	0	47	0	125	0
Lane Group Flow (vph)	80	1005	40	160	1400	86	220	450	298	200	230	0
Heavy Vehicles (%)	0%	2%	0%	4%	1%	0%	0%	0%	0%	0%	0%	1%
Bus Blockages (#/hr)	0	4	0	0	4	0	0	0	0	0	0	0
Turn Type	Prot		Perm	Prot		Perm	Prot		pt+ov	Prot		
Protected Phases	5	2		1	6		3	8	8 1	7	4	
Permitted Phases			2			6						
Actuated Green, G (s)	8.8	55.2	55.2	13.3	59.7	59.7	15.0	19.6	37.4	14.0	18.6	
Effective Green, g (s)	8.8	56.6	56.6	13.3	61.1	61.1	15.0	20.1	37.4	14.0	19.1	
Actuated g/C Ratio	0.07	0.47	0.47	0.11	0.51	0.51	0.12	0.17	0.31	0.12	0.16	
Clearance Time (s)	4.0	5.4	5.4	4.0	5.4	5.4	4.0	4.5		4.0	4.5	
Vehicle Extension (s)	2.3	4.4	4.4	2.3	4.4	4.4	2.3	2.3		2.3	2.3	
Lane Grp Cap (vph)	132	1656	762	192	1806	822	226	605	503	211	533	
v/s Ratio Prot	0.04	0.29		c0.09	c0.39		c0.12	c0.12	0.18	0.11	0.07	
v/s Ratio Perm			0.02			0.05						
v/c Ratio	0.61	0.61	0.05	0.83	0.78	0.10	0.97	0.74	0.59	0.95	0.43	
Uniform Delay, d1	53.9	23.5	17.2	52.3	23.9	15.3	52.3	47.5	34.9	52.6	45.5	
Progression Factor	1.00	1.00	1.00	0.84	0.80	1.18	1.00	1.00	1.00	1.00	1.00	
Incremental Delay, d2	6.0	1.7	0.1	14.3	1.7	0.1	51.9	4.5	1.4	46.7	0.3	
Delay (s)	59.9	25.1	17.3	58.4	20.8	18.1	104.2	52.0	36.3	99.3	45.9	
Level of Service	E	C	B	E	C	B	F	D	D	F	D	
Approach Delay (s)		26.9			24.0			58.0			65.1	
Approach LOS		C			C			E			E	

Intersection Summary			
HCM Average Control Delay	37.6	HCM Level of Service	D
HCM Volume to Capacity ratio	0.77		
Actuated Cycle Length (s)	120.0	Sum of lost time (s)	8.0
Intersection Capacity Utilization	80.0%	ICU Level of Service	D
Analysis Period (min)	15		
c Critical Lane Group			

Movement	EBL	EBT	EBR	WBL	WBT	WBR	NBL	NBT	NBR	SBL	SBT	SBR
Lane Configurations												
Volume (veh/h)	0	0	230	0	0	65	0	950	15	0	300	140
Sign Control		Stop			Stop			Free			Free	
Grade		0%			0%			0%			0%	
Peak Hour Factor	1.00	1.00	1.00	1.00	1.00	1.00	1.00	1.00	1.00	1.00	1.00	1.00
Hourly flow rate (vph)	0	0	230	0	0	65	0	950	15	0	300	140
Pedestrians												
Lane Width (ft)												
Walking Speed (ft/s)												
Percent Blockage												
Right turn flare (veh)												
Median type								None			None	
Median storage veh)												
Upstream signal (ft)											280	
pX, platoon unblocked	0.92	0.92	0.92	0.92	0.92		0.92					
vC, conflicting volume	1322	1265	300	1488	1398	958	440			965		
vC1, stage 1 conf vol												
vC2, stage 2 conf vol												
vCu, unblocked vol	1307	1245	199	1486	1389	958	350			965		
tC, single (s)	7.1	6.5	6.2	7.1	6.5	6.2	4.1			4.1		
tC, 2 stage (s)												
tF (s)	3.5	4.0	3.3	3.5	4.0	3.3	2.2			2.2		
p0 queue free %	100	100	71	100	100	79	100			100		
cM capacity (veh/h)	101	162	782	67	133	315	1125			722		

Direction, Lane #	EB 1	WB 1	NB 1	SB 1	SB 2
Volume Total	230	65	965	300	140
Volume Left	0	0	0	0	0
Volume Right	230	65	15	0	140
cSH	782	315	1700	1700	1700
Volume to Capacity	0.29	0.21	0.57	0.18	0.08
Queue Length 95th (ft)	31	19	0	0	0
Control Delay (s)	11.5	19.4	0.0	0.0	0.0
Lane LOS	B	C			
Approach Delay (s)	11.5	19.4	0.0	0.0	
Approach LOS	B	C			

Intersection Summary			
Average Delay	2.3		
Intersection Capacity Utilization	61.6%	ICU Level of Service	B
Analysis Period (min)	15		

Movement	EBL	EBR	NBL	NBT	SBT	SBR
Lane Configurations						
Volume (veh/h)	240	25	30	165	445	210
Sign Control	Stop			Free	Free	
Grade	0%			0%	0%	
Peak Hour Factor	1.00	1.00	1.00	1.00	1.00	1.00
Hourly flow rate (vph)	240	25	30	165	445	210
Pedestrians						
Lane Width (ft)						
Walking Speed (ft/s)						
Percent Blockage						
Right turn flare (veh)						
Median type				None	None	
Median storage veh)						
Upstream signal (ft)						
pX, platoon unblocked						
vC, conflicting volume	775	550	655			
vC1, stage 1 conf vol						
vC2, stage 2 conf vol						
vCu, unblocked vol	775	550	655			
tC, single (s)	6.4	6.2	4.1			
tC, 2 stage (s)						
tF (s)	3.5	3.3	2.2			
p0 queue free %	32	95	97			
cM capacity (veh/h)	355	535	932			

Direction, Lane #	EB 1	EB 2	NB 1	NB 2	SB 1
Volume Total	240	25	30	165	655
Volume Left	240	0	30	0	0
Volume Right	0	25	0	0	210
cSH	355	535	932	1700	1700
Volume to Capacity	0.68	0.05	0.03	0.10	0.39
Queue Length 95th (ft)	118	4	2	0	0
Control Delay (s)	34.0	12.1	9.0	0.0	0.0
Lane LOS	D	B	A		
Approach Delay (s)	31.9		1.4		0.0
Approach LOS	D				

Intersection Summary			
Average Delay	7.8		
Intersection Capacity Utilization	57.0%	ICU Level of Service	B
Analysis Period (min)	15		

Movement	EBL	EBT	EBR	WBL	WBT	WBR	NBL	NBT	NBR	SBL	SBT	SBR
Lane Configurations												
Volume (vph)	275	1230	165	60	1310	25	315	285	400	30	140	180
Ideal Flow (vphpl)	1900	1900	1900	1900	1900	1900	1900	1900	1900	1900	1900	1900
Total Lost time (s)	4.0	4.0	4.0	4.0	4.0		4.0	4.0		4.0	4.0	
Lane Util. Factor	1.00	0.95	1.00	1.00	0.95		1.00	1.00		1.00	1.00	
Frt	1.00	1.00	0.85	1.00	1.00		1.00	0.91		1.00	0.92	
Flt Protected	0.95	1.00	1.00	0.95	1.00		0.95	1.00		0.95	1.00	
Satd. Flow (prot)	1703	3406	1495	1641	3430		1597	1463		1752	1713	
Flt Permitted	0.12	1.00	1.00	0.12	1.00		0.24	1.00		0.13	1.00	
Satd. Flow (perm)	207	3406	1495	208	3430		406	1463		248	1713	
Peak-hour factor, PHF	1.00	1.00	1.00	1.00	1.00	1.00	1.00	1.00	1.00	1.00	1.00	1.00
Adj. Flow (vph)	275	1230	165	60	1310	25	315	285	400	30	140	180
RTOR Reduction (vph)	0	0	54	0	1	0	0	40	0	0	37	0
Lane Group Flow (vph)	275	1230	111	60	1334	0	315	645	0	30	283	0
Heavy Vehicles (%)	6%	6%	8%	10%	5%	3%	13%	15%	21%	3%	1%	2%
Turn Type	pm+pt		Perm	pm+pt			pm+pt			pm+pt		
Protected Phases	5	2		1	6		3	8		7	4	
Permitted Phases	2		2	6			8			4		
Actuated Green, G (s)	50.4	49.0	49.0	37.2	37.2		53.1	46.7		32.2	29.8	
Effective Green, g (s)	50.4	50.4	50.4	37.2	38.6		53.1	47.2		32.2	30.3	
Actuated g/C Ratio	0.42	0.42	0.42	0.31	0.32		0.44	0.39		0.27	0.25	
Clearance Time (s)	4.0	5.4	5.4	4.0	5.4		4.0	4.5		4.0	4.5	
Vehicle Extension (s)	2.3	4.5	4.5	2.3	4.5		2.5	2.5		2.5	2.5	
Lane Grp Cap (vph)	284	1431	628	112	1103		371	575		97	433	
v/s Ratio Prot	0.13	c0.36		0.02	c0.39		c0.14	c0.44		0.01	0.16	
v/s Ratio Perm	0.28		0.07	0.15			0.24			0.08		
v/c Ratio	0.97	0.86	0.18	0.54	1.21		0.85	1.12		0.31	0.65	
Uniform Delay, d1	48.4	31.6	21.8	33.3	40.7		25.6	36.4		35.1	40.1	
Progression Factor	0.85	0.78	0.79	1.07	0.73		1.00	1.00		1.00	1.00	
Incremental Delay, d2	35.1	4.8	0.4	3.0	102.1		16.1	75.6		1.3	3.1	
Delay (s)	76.1	29.6	17.7	38.6	131.7		41.7	112.0		36.4	43.3	
Level of Service	E	C	B	D	F		D	F		D	D	
Approach Delay (s)		36.1			127.7			89.9			42.7	
Approach LOS		D			F			F			D	

Intersection Summary			
HCM Average Control Delay	77.7	HCM Level of Service	E
HCM Volume to Capacity ratio	1.10		
Actuated Cycle Length (s)	120.0	Sum of lost time (s)	12.0
Intersection Capacity Utilization	108.4%	ICU Level of Service	G
Analysis Period (min)	15		

c Critical Lane Group

Movement	EBL	EBT	EBR	WBL	WBT	WBR	NBL	NBT	NBR	SBL	SBT	SBR
Lane Configurations												
Volume (vph)	260	90	40	75	35	195	140	1165	220	75	600	100
Ideal Flow (vphpl)	1900	1900	1900	1900	1900	1900	1900	1900	1900	1900	1900	1900
Total Lost time (s)	5.0	5.0		5.0	5.0		5.0	5.0		5.0	5.0	
Lane Util. Factor	1.00	1.00		1.00	1.00		1.00	0.95		1.00	0.95	
Frt	1.00	0.95		1.00	0.87		1.00	0.98		1.00	0.98	
Flt Protected	0.95	1.00		0.95	1.00		0.95	1.00		0.95	1.00	
Satd. Flow (prot)	1770	1777		1770	1626		1770	3455		1770	3463	
Flt Permitted	0.23	1.00		0.67	1.00		0.28	1.00		0.11	1.00	
Satd. Flow (perm)	428	1777		1255	1626		524	3455		199	3463	
Peak-hour factor, PHF	1.00	1.00	1.00	1.00	1.00	1.00	1.00	1.00	1.00	1.00	1.00	1.00
Adj. Flow (vph)	260	90	40	75	35	195	140	1165	220	75	600	100
RTOR Reduction (vph)	0	14	0	0	139	0	0	13	0	0	12	0
Lane Group Flow (vph)	260	116	0	75	91	0	140	1372	0	75	688	0
Turn Type	pm+pt			pm+pt			pm+pt			pm+pt		
Protected Phases	3	8		7	4		1	6		5	2	
Permitted Phases	8			4			6			2		
Actuated Green, G (s)	30.5	22.1		16.8	12.9		48.0	40.3		43.4	38.0	
Effective Green, g (s)	30.0	21.6		15.8	12.4		47.0	39.8		42.4	37.5	
Actuated g/C Ratio	0.33	0.24		0.18	0.14		0.52	0.44		0.47	0.42	
Clearance Time (s)	4.5	4.5		4.5	4.5		4.5	4.5		4.5	4.5	
Vehicle Extension (s)	2.5	2.5		2.5	2.5		2.5	2.5		2.5	2.5	
Lane Grp Cap (vph)	332	428		241	225		375	1533		180	1448	
v/s Ratio Prot	c0.11	0.07		0.01	0.06		c0.03	c0.40		0.02	0.20	
v/s Ratio Perm	c0.15			0.04			0.17			0.17		
v/c Ratio	0.78	0.27		0.31	0.41		0.37	0.90		0.42	0.48	
Uniform Delay, d1	24.2	27.6		31.8	35.3		11.8	23.0		17.5	19.0	
Progression Factor	1.00	1.00		1.00	1.00		1.00	1.00		1.00	1.00	
Incremental Delay, d2	11.0	0.2		0.5	0.9		0.5	7.2		1.1	0.2	
Delay (s)	35.2	27.9		32.3	36.2		12.3	30.2		18.6	19.1	
Level of Service	D	C		C	D		B	C		B	B	
Approach Delay (s)		32.8			35.2			28.5			19.1	
Approach LOS		C			D			C			B	

Intersection Summary			
HCM Average Control Delay	27.3	HCM Level of Service	C
HCM Volume to Capacity ratio	0.76		
Actuated Cycle Length (s)	89.7	Sum of lost time (s)	10.0
Intersection Capacity Utilization	88.3%	ICU Level of Service	E
Analysis Period (min)	15		
c Critical Lane Group			

Movement	WBL	WBR	NBT	NBR	SBL	SBT
Lane Configurations						
Volume (veh/h)	190	225	290	215	290	465
Sign Control	Stop		Free			Free
Grade	0%		0%			0%
Peak Hour Factor	1.00	1.00	1.00	1.00	1.00	1.00
Hourly flow rate (vph)	190	225	290	215	290	465
Pedestrians						
Lane Width (ft)						
Walking Speed (ft/s)						
Percent Blockage						
Right turn flare (veh)						
Median type			None			None
Median storage veh)						
Upstream signal (ft)						1106
pX, platoon unblocked						
vC, conflicting volume	1442	398			505	
vC1, stage 1 conf vol						
vC2, stage 2 conf vol						
vCu, unblocked vol	1442	398			505	
tC, single (s)	6.4	6.2			4.1	
tC, 2 stage (s)						
tF (s)	3.5	3.3			2.2	
p0 queue free %	0	66			73	
cM capacity (veh/h)	107	656			1070	

Direction, Lane #	WB 1	WB 2	NB 1	SB 1	SB 2
Volume Total	190	225	505	290	465
Volume Left	190	0	0	290	0
Volume Right	0	225	215	0	0
cSH	107	656	1700	1070	1700
Volume to Capacity	1.77	0.34	0.30	0.27	0.27
Queue Length 95th (ft)	377	38	0	28	0
Control Delay (s)	450.1	13.3	0.0	9.6	0.0
Lane LOS	F	B		A	
Approach Delay (s)	213.3		0.0	3.7	
Approach LOS	F				

Intersection Summary			
Average Delay	54.5		
Intersection Capacity Utilization	66.2%	ICU Level of Service	C
Analysis Period (min)	15		

Movement	EBL	EBT	EBR	WBL	WBT	WBR	NBL	NBT	NBR	SBL	SBT	SBR
Lane Configurations												
Volume (vph)	175	430	90	125	435	235	200	960	80	135	315	145
Ideal Flow (vphpl)	1900	1900	1900	1900	1900	1900	1900	1900	1900	1900	1900	1900
Total Lost time (s)	4.0	4.0		4.0	4.0		4.0	4.0		4.0	4.0	
Lane Util. Factor	1.00	1.00		1.00	1.00		1.00	0.95		1.00	0.95	
Frt	1.00	0.97		1.00	0.95		1.00	0.99		1.00	0.95	
Flt Protected	0.95	1.00		0.95	1.00		0.95	1.00		0.95	1.00	
Satd. Flow (prot)	1805	1851		1805	1800		1805	3568		1805	3439	
Flt Permitted	0.95	1.00		0.95	1.00		0.37	1.00		0.09	1.00	
Satd. Flow (perm)	1805	1851		1805	1800		701	3568		180	3439	
Peak-hour factor, PHF	1.00	1.00	1.00	1.00	1.00	1.00	1.00	1.00	1.00	1.00	1.00	1.00
Adj. Flow (vph)	175	430	90	125	435	235	200	960	80	135	315	145
RTOR Reduction (vph)	0	5	0	0	14	0	0	4	0	0	38	0
Lane Group Flow (vph)	175	515	0	125	656	0	200	1036	0	135	422	0
Heavy Vehicles (%)	0%	0%	0%	0%	0%	0%	0%	0%	0%	0%	0%	0%
Turn Type	Prot			Prot			pm+pt			pm+pt		
Protected Phases	3	8		7	4		1	6		5	2	
Permitted Phases							6			2		
Actuated Green, G (s)	14.6	54.3		11.6	51.3		49.5	40.9		50.3	41.3	
Effective Green, g (s)	15.6	55.7		12.6	52.7		51.5	42.4		52.3	42.8	
Actuated g/C Ratio	0.11	0.41		0.09	0.39		0.38	0.31		0.38	0.31	
Clearance Time (s)	5.0	5.4		5.0	5.4		5.0	5.5		5.0	5.5	
Vehicle Extension (s)	0.2	5.0		0.2	8.0		0.2	5.0		0.2	5.0	
Lane Grp Cap (vph)	206	754		166	694		342	1107		188	1077	
v/s Ratio Prot	c0.10	c0.28		0.07	c0.36		0.04	c0.29		c0.05	0.12	
v/s Ratio Perm							0.18			0.22		
v/c Ratio	0.85	0.68		0.75	0.95		0.58	0.94		0.72	0.39	
Uniform Delay, d1	59.4	33.2		60.5	40.6		31.2	45.8		33.8	36.8	
Progression Factor	1.00	1.00		1.00	1.00		1.00	1.00		1.00	1.00	
Incremental Delay, d2	25.5	3.3		15.6	23.2		1.6	14.6		10.4	0.5	
Delay (s)	84.9	36.5		76.2	63.8		32.8	60.4		44.2	37.2	
Level of Service	F	D		E	E		C	E		D	D	
Approach Delay (s)		48.7			65.8			56.0			38.8	
Approach LOS		D			E			E			D	

Intersection Summary			
HCM Average Control Delay	53.7	HCM Level of Service	D
HCM Volume to Capacity ratio	0.93		
Actuated Cycle Length (s)	136.7	Sum of lost time (s)	20.0
Intersection Capacity Utilization	96.8%	ICU Level of Service	F
Analysis Period (min)	15		

c Critical Lane Group

Movement	EBL	EBT	EBR	WBL	WBT	WBR	NBL	NBT	NBR	SBL	SBT	SBR
Lane Configurations												
Volume (vph)	80	150	170	290	65	160	165	1070	220	40	295	40
Ideal Flow (vphpl)	1900	1900	1900	1900	1900	1900	1900	1900	1900	1900	1900	1900
Total Lost time (s)	4.0	4.0		4.0	4.0		4.0	4.0		4.0	4.0	
Lane Util. Factor	1.00	1.00		1.00	1.00		1.00	0.95		1.00	0.95	
Frt	1.00	0.92		1.00	0.89		1.00	0.97		1.00	0.98	
Flt Protected	0.95	1.00		0.95	1.00		0.95	1.00		0.95	1.00	
Satd. Flow (prot)	1770	1714		1770	1664		1770	3449		1770	3476	
Flt Permitted	0.62	1.00		0.19	1.00		0.44	1.00		0.12	1.00	
Satd. Flow (perm)	1151	1714		345	1664		824	3449		218	3476	
Peak-hour factor, PHF	1.00	1.00	1.00	1.00	1.00	1.00	1.00	1.00	1.00	1.00	1.00	1.00
Adj. Flow (vph)	80	150	170	290	65	160	165	1070	220	40	295	40
RTOR Reduction (vph)	0	35	0	0	79	0	0	14	0	0	9	0
Lane Group Flow (vph)	80	285	0	290	146	0	165	1276	0	40	326	0
Turn Type	pm+pt			pm+pt			pm+pt			pm+pt		
Protected Phases	3	8		7	4		1	6		5	2	
Permitted Phases	8			4			6			2		
Actuated Green, G (s)	26.5	22.0		46.6	38.1		48.3	42.2		36.3	34.2	
Effective Green, g (s)	26.5	22.0		46.6	38.1		48.3	42.2		36.3	34.2	
Actuated g/C Ratio	0.26	0.21		0.45	0.37		0.47	0.41		0.35	0.33	
Clearance Time (s)	4.0	4.0		4.0	4.0		4.0	4.0		4.0	4.0	
Vehicle Extension (s)	2.5	2.5		2.5	2.5		2.5	2.5		2.5	2.5	
Lane Grp Cap (vph)	323	366		442	616		480	1414		109	1155	
v/s Ratio Prot	0.01	c0.17		c0.13	0.09		c0.03	c0.37		0.01	0.09	
v/s Ratio Perm	0.05			0.17			0.13			0.12		
v/c Ratio	0.25	0.78		0.66	0.24		0.34	0.90		0.37	0.28	
Uniform Delay, d1	29.7	38.1		20.5	22.4		16.3	28.4		25.2	25.3	
Progression Factor	1.00	1.00		1.00	1.00		1.00	1.00		1.00	1.00	
Incremental Delay, d2	0.3	9.6		3.1	0.1		0.3	8.3		1.5	0.1	
Delay (s)	30.0	47.7		23.6	22.5		16.6	36.8		26.7	25.4	
Level of Service	C	D		C	C		B	D		C	C	
Approach Delay (s)		44.2			23.1			34.5			25.5	
Approach LOS		D			C			C			C	

Intersection Summary			
HCM Average Control Delay	32.5	HCM Level of Service	C
HCM Volume to Capacity ratio	0.81		
Actuated Cycle Length (s)	102.9	Sum of lost time (s)	16.0
Intersection Capacity Utilization	87.6%	ICU Level of Service	E
Analysis Period (min)	15		
c Critical Lane Group			

Movement	EBL	EBT	EBR	WBL	WBT	WBR	NBL	NBT	NBR	SBL	SBT	SBR
Lane Configurations												
Volume (vph)	10	1550	265	155	1295	50	225	450	165	55	100	15
Ideal Flow (vphpl)	1900	1900	1900	1900	1900	1900	1900	1900	1900	1900	1900	1900
Total Lost time (s)	4.0	4.0	3.3	4.0	4.0	4.0	4.0	4.0		4.0	4.0	
Lane Util. Factor	1.00	0.95	1.00	1.00	0.95	1.00	1.00	1.00		1.00	1.00	
Frt	1.00	1.00	0.85	1.00	1.00	0.85	1.00	0.96		1.00	0.98	
Flt Protected	0.95	1.00	1.00	0.95	1.00	1.00	0.95	1.00		0.95	1.00	
Satd. Flow (prot)	1641	3438	1495	1671	3438	1615	1703	1755		1752	1730	
Flt Permitted	0.95	1.00	1.00	0.95	1.00	1.00	0.56	1.00		0.13	1.00	
Satd. Flow (perm)	1641	3438	1495	1671	3438	1615	1005	1755		245	1730	
Peak-hour factor, PHF	1.00	1.00	1.00	1.00	1.00	1.00	1.00	1.00	1.00	1.00	1.00	1.00
Adj. Flow (vph)	10	1550	265	155	1295	50	225	450	165	55	100	15
RTOR Reduction (vph)	0	0	97	0	0	11	0	11	0	0	4	0
Lane Group Flow (vph)	10	1550	168	155	1295	39	225	604	0	55	111	0
Heavy Vehicles (%)	10%	5%	8%	8%	5%	0%	6%	2%	9%	3%	7%	12%
Turn Type	Prot		pm+ov	Prot		Perm	pm+pt			pm+pt		
Protected Phases	5	2	3	1	6		3	8		7	4	
Permitted Phases			2			6	8			4		
Actuated Green, G (s)	0.8	47.3	60.5	12.2	58.7	58.7	47.3	39.3		34.1	30.1	
Effective Green, g (s)	0.8	48.0	61.9	12.2	59.4	59.4	47.3	39.8		34.1	30.6	
Actuated g/C Ratio	0.01	0.40	0.52	0.10	0.49	0.49	0.39	0.33		0.28	0.26	
Clearance Time (s)	4.0	4.7	4.0	4.0	4.7	4.7	4.0	4.5		4.0	4.5	
Vehicle Extension (s)	2.3	4.5	2.5	2.3	4.5	4.5	2.5	2.5		2.5	2.5	
Lane Grp Cap (vph)	11	1375	771	170	1702	799	473	582		120	441	
v/s Ratio Prot	0.01	c0.45	0.03	0.09	c0.38		c0.05	c0.34		0.02	0.06	
v/s Ratio Perm			0.09			0.02	0.14			0.12		
v/c Ratio	0.91	1.13	0.22	0.91	0.76	0.05	0.48	1.04		0.46	0.25	
Uniform Delay, d1	59.6	36.0	15.8	53.4	24.5	15.7	25.6	40.1		34.7	35.6	
Progression Factor	1.29	0.62	0.38	0.94	0.89	0.78	1.00	1.00		1.00	1.00	
Incremental Delay, d2	146.8	62.5	0.1	40.7	2.9	0.1	0.6	47.6		2.0	0.2	
Delay (s)	223.6	84.7	6.1	90.8	24.7	12.4	26.1	87.7		36.7	35.8	
Level of Service	F	F	A	F	C	B	C	F		D	D	
Approach Delay (s)		74.1			31.1			71.2			36.1	
Approach LOS		E			C			E			D	

Intersection Summary			
HCM Average Control Delay	57.2	HCM Level of Service	E
HCM Volume to Capacity ratio	1.01		
Actuated Cycle Length (s)	120.0	Sum of lost time (s)	12.0
Intersection Capacity Utilization	101.8%	ICU Level of Service	G
Analysis Period (min)	15		

c Critical Lane Group

Movement	EBL	EBT	EBR	WBL	WBT	WBR	NBL	NBT	NBR	SBL	SBT	SBR
Lane Configurations												
Volume (vph)	50	1490	165	175	1050	150	285	515	330	235	170	50
Ideal Flow (vphpl)	1900	1900	1900	1900	1900	1900	1900	1900	1900	1900	1900	1900
Total Lost time (s)	4.0	4.0	4.0	4.0	4.0	4.0	4.0	4.0	4.0	4.0	4.0	
Lane Util. Factor	1.00	0.95	1.00	1.00	0.95	1.00	1.00	1.00	1.00	1.00	1.00	
Frt	1.00	1.00	0.85	1.00	1.00	0.85	1.00	1.00	0.85	1.00	0.97	
Flt Protected	0.95	1.00	1.00	0.95	1.00	1.00	0.95	1.00	1.00	0.95	1.00	
Satd. Flow (prot)	1805	3574	1615	1805	3539	1615	1787	1900	1615	1805	1807	
Flt Permitted	0.95	1.00	1.00	0.95	1.00	1.00	0.95	1.00	1.00	0.95	1.00	
Satd. Flow (perm)	1805	3574	1615	1805	3539	1615	1787	1900	1615	1805	1807	
Peak-hour factor, PHF	1.00	1.00	1.00	1.00	1.00	1.00	1.00	1.00	1.00	1.00	1.00	1.00
Adj. Flow (vph)	50	1490	165	175	1050	150	285	515	330	235	170	50
RTOR Reduction (vph)	0	0	58	0	0	40	0	0	135	0	9	0
Lane Group Flow (vph)	50	1490	107	175	1050	110	285	515	195	235	211	0
Heavy Vehicles (%)	0%	1%	0%	0%	2%	0%	1%	0%	0%	0%	2%	0%
Turn Type	Prot		Perm	Prot		Perm	Prot		Perm	Prot		
Protected Phases	5	2		1	6		7	4		3	8	
Permitted Phases			2			6			4			
Actuated Green, G (s)	6.1	44.9	44.9	11.8	50.6	50.6	27.7	30.4	30.4	15.0	17.7	
Effective Green, g (s)	6.1	46.3	46.3	11.8	52.0	52.0	27.7	30.9	30.9	15.0	18.2	
Actuated g/C Ratio	0.05	0.39	0.39	0.10	0.43	0.43	0.23	0.26	0.26	0.12	0.15	
Clearance Time (s)	4.0	5.4	5.4	4.0	5.4	5.4	4.0	4.5	4.5	4.0	4.5	
Vehicle Extension (s)	2.3	4.5	4.5	2.3	4.5	4.5	2.3	2.3	2.3	2.3	2.3	
Lane Grp Cap (vph)	92	1379	623	177	1534	700	412	489	416	226	274	
v/s Ratio Prot	0.03	c0.42		c0.10	0.30		0.16	c0.27		c0.13	0.12	
v/s Ratio Perm			0.07			0.07			0.12			
v/c Ratio	0.54	1.08	0.17	0.99	0.68	0.16	0.69	1.05	0.47	1.04	0.77	
Uniform Delay, d1	55.6	36.9	24.2	54.0	27.4	20.7	42.2	44.6	37.6	52.5	48.9	
Progression Factor	1.31	0.46	0.40	1.00	1.00	1.00	1.00	1.00	1.00	1.00	1.00	
Incremental Delay, d2	3.3	46.4	0.4	63.6	2.5	0.5	4.4	55.4	0.5	70.7	11.4	
Delay (s)	76.3	63.4	10.2	117.7	29.9	21.2	46.6	100.0	38.1	123.2	60.3	
Level of Service	E	E	B	F	C	C	D	F	D	F	E	
Approach Delay (s)		58.6			40.1			68.4			92.8	
Approach LOS		E			D			E			F	

Intersection Summary			
HCM Average Control Delay	58.9	HCM Level of Service	E
HCM Volume to Capacity ratio	1.06		
Actuated Cycle Length (s)	120.0	Sum of lost time (s)	16.0
Intersection Capacity Utilization	104.3%	ICU Level of Service	G
Analysis Period (min)	15		

c Critical Lane Group

Movement	EBL	EBT	EBR	WBL	WBT	WBR	NBL	NBT	NBR	SBL	SBT	SBR
Lane Configurations												
Volume (vph)	210	1560	170	120	970	135	365	1050	205	185	485	135
Ideal Flow (vphpl)	1900	1900	1900	1900	1900	1900	1900	1900	1900	1900	1900	1900
Total Lost time (s)	4.0	4.0	3.5	4.0	4.0		4.0	4.0	4.0	4.0	4.0	3.0
Lane Util. Factor	0.97	0.95	1.00	0.97	0.95		0.97	0.95	1.00	0.97	0.95	1.00
Frt	1.00	1.00	0.85	1.00	0.98		1.00	1.00	0.85	1.00	1.00	0.85
Flt Protected	0.95	1.00	1.00	0.95	1.00		0.95	1.00	1.00	0.95	1.00	1.00
Satd. Flow (prot)	3467	3610	1615	3502	3513		3502	3610	1615	3502	3574	1615
Flt Permitted	0.95	1.00	1.00	0.95	1.00		0.95	1.00	1.00	0.95	1.00	1.00
Satd. Flow (perm)	3467	3610	1615	3502	3513		3502	3610	1615	3502	3574	1615
Peak-hour factor, PHF	1.00	1.00	1.00	1.00	1.00	1.00	1.00	1.00	1.00	1.00	1.00	1.00
Adj. Flow (vph)	210	1560	170	120	970	135	365	1050	205	185	485	135
RTOR Reduction (vph)	0	0	16	0	9	0	0	0	7	0	0	34
Lane Group Flow (vph)	210	1560	154	120	1096	0	365	1050	198	185	485	101
Heavy Vehicles (%)	1%	0%	0%	0%	1%	0%	0%	0%	0%	0%	1%	0%
Turn Type	Prot		pm+ov	Prot			Prot		pm+ov	Prot		pm+ov
Protected Phases	5	2	3	1	6		3	8	1	7	4	5
Permitted Phases			2						8			4
Actuated Green, G (s)	10.1	55.1	71.7	5.7	50.7		16.6	35.4	41.1	7.7	26.5	36.6
Effective Green, g (s)	9.6	55.6	71.7	5.2	51.2		16.1	35.9	40.1	7.2	27.0	37.6
Actuated g/C Ratio	0.08	0.46	0.60	0.04	0.43		0.13	0.30	0.33	0.06	0.23	0.31
Clearance Time (s)	3.5	4.5	3.5	3.5	4.5		3.5	4.5	3.5	3.5	4.5	3.5
Vehicle Extension (s)	2.3	4.3	2.3	2.3	4.3		2.3	2.3	2.3	2.3	2.3	2.3
Lane Grp Cap (vph)	278	1674	966	152	1500		470	1081	540	210	805	506
v/s Ratio Prot	c0.06	c0.43	0.02	0.03	0.31		c0.10	c0.29	0.02	0.05	0.14	0.02
v/s Ratio Perm			0.07						0.11			0.04
v/c Ratio	0.76	0.93	0.16	0.79	0.73		0.78	0.97	0.37	0.88	0.60	0.20
Uniform Delay, d1	54.0	30.4	10.7	56.8	28.6		50.2	41.5	30.3	55.9	41.6	30.1
Progression Factor	1.00	1.00	1.00	1.00	1.00		1.00	1.00	1.00	1.00	1.00	1.00
Incremental Delay, d2	10.3	10.9	0.0	22.2	3.2		7.4	20.6	0.2	31.7	1.0	0.1
Delay (s)	64.3	41.2	10.8	79.0	31.8		57.6	62.1	30.5	87.6	42.6	30.2
Level of Service	E	D	B	E	C		E	E	C	F	D	C
Approach Delay (s)		41.1			36.4			57.1			50.9	
Approach LOS		D			D			E			D	

Intersection Summary			
HCM Average Control Delay	46.1	HCM Level of Service	D
HCM Volume to Capacity ratio	0.92		
Actuated Cycle Length (s)	119.9	Sum of lost time (s)	12.0
Intersection Capacity Utilization	94.2%	ICU Level of Service	F
Analysis Period (min)	15		

c Critical Lane Group

Movement	WBL	WBR	NBT	NBR	SBL	SBT
Lane Configurations						
Volume (vph)	155	235	620	225	120	210
Ideal Flow (vphpl)	1900	1900	1900	1900	1900	1900
Total Lost time (s)	4.0	4.0	4.0	4.0	4.0	4.0
Lane Util. Factor	1.00	1.00	1.00	1.00	1.00	1.00
Frt	1.00	0.85	1.00	0.85	1.00	1.00
Flt Protected	0.95	1.00	1.00	1.00	0.95	1.00
Satd. Flow (prot)	1787	1599	1881	1599	1787	1881
Flt Permitted	0.95	1.00	1.00	1.00	0.95	1.00
Satd. Flow (perm)	1787	1599	1881	1599	1787	1881
Peak-hour factor, PHF	1.00	1.00	1.00	1.00	1.00	1.00
Adj. Flow (vph)	155	235	620	225	120	210
RTOR Reduction (vph)	0	184	0	80	0	0
Lane Group Flow (vph)	155	51	620	145	120	210
Heavy Vehicles (%)	1%	1%	1%	1%	1%	1%
Turn Type		Prot		Perm	Prot	
Protected Phases	4	4	6		5	2
Permitted Phases				6		
Actuated Green, G (s)	11.2	11.2	24.0	24.0	6.8	35.8
Effective Green, g (s)	12.2	12.2	24.5	24.5	7.8	36.3
Actuated g/C Ratio	0.22	0.22	0.43	0.43	0.14	0.64
Clearance Time (s)	5.0	5.0	4.5	4.5	5.0	4.5
Vehicle Extension (s)	3.0	3.0	1.0	1.0	3.0	1.0
Lane Grp Cap (vph)	386	345	816	693	247	1209
v/s Ratio Prot	c0.09	0.03	c0.33		c0.07	0.11
v/s Ratio Perm				0.09		
v/c Ratio	0.40	0.15	0.76	0.21	0.49	0.17
Uniform Delay, d1	19.0	17.9	13.5	10.0	22.5	4.1
Progression Factor	1.00	1.00	1.00	1.00	1.00	1.00
Incremental Delay, d2	0.7	0.2	3.6	0.1	1.5	0.0
Delay (s)	19.7	18.1	17.2	10.0	24.0	4.1
Level of Service	B	B	B	B	C	A
Approach Delay (s)	18.8		15.3			11.3
Approach LOS	B		B			B

Intersection Summary			
HCM Average Control Delay	15.3	HCM Level of Service	B
HCM Volume to Capacity ratio	0.61		
Actuated Cycle Length (s)	56.5	Sum of lost time (s)	12.0
Intersection Capacity Utilization	57.9%	ICU Level of Service	B
Analysis Period (min)	15		

c Critical Lane Group

Movement	EBL	EBT	EBR	WBL	WBT	WBR	NBL	NBT	NBR	SBL	SBT	SBR
Lane Configurations												
Volume (veh/h)	150	25	10	15	35	425	130	425	30	120	170	75
Sign Control		Stop			Stop			Free			Free	
Grade		0%			0%			0%			0%	
Peak Hour Factor	1.00	1.00	1.00	1.00	1.00	1.00	1.00	1.00	1.00	1.00	1.00	1.00
Hourly flow rate (vph)	150	25	10	15	35	425	130	425	30	120	170	75
Pedestrians												
Lane Width (ft)												
Walking Speed (ft/s)												
Percent Blockage												
Right turn flare (veh)												
Median type								None			None	
Median storage veh)												
Upstream signal (ft)											679	
pX, platoon unblocked												
vC, conflicting volume	1575	1162	208	1132	1185	440	245			455		
vC1, stage 1 conf vol												
vC2, stage 2 conf vol												
vCu, unblocked vol	1575	1162	208	1132	1185	440	245			455		
tC, single (s)	7.1	6.5	6.2	7.1	6.5	6.3	4.3			4.1		
tC, 2 stage (s)												
tF (s)	3.5	4.0	3.3	3.5	4.0	3.4	2.4			2.2		
p0 queue free %	0	84	99	89	77	29	89			89		
cM capacity (veh/h)	18	155	838	133	149	599	1198			1100		

Direction, Lane #	EB 1	WB 1	NB 1	NB 2	SB 1	SB 2
Volume Total	185	475	130	455	120	245
Volume Left	150	15	130	0	120	0
Volume Right	10	425	0	30	0	75
cSH	21	449	1198	1700	1100	1700
Volume to Capacity	8.63	1.06	0.11	0.27	0.11	0.14
Queue Length 95th (ft)	Err	376	9	0	9	0
Control Delay (s)	Err	88.9	8.4	0.0	8.7	0.0
Lane LOS	F	F	A		A	
Approach Delay (s)	Err	88.9	1.9		2.9	
Approach LOS	F	F				

Intersection Summary			
Average Delay	1176.5		
Intersection Capacity Utilization	83.3%	ICU Level of Service	E
Analysis Period (min)	15		

Movement	EBL	EBT	EBR	WBL	WBT	WBR	NBL	NBT	NBR	SBL	SBT	SBR
Lane Configurations												
Volume (veh/h)	250	200	60	60	80	105	185	600	140	40	420	90
Sign Control		Stop			Stop			Free			Free	
Grade		0%			0%			0%			0%	
Peak Hour Factor	1.00	1.00	1.00	1.00	1.00	1.00	1.00	1.00	1.00	1.00	1.00	1.00
Hourly flow rate (vph)	250	200	60	60	80	105	185	600	140	40	420	90
Pedestrians												
Lane Width (ft)												
Walking Speed (ft/s)												
Percent Blockage												
Right turn flare (veh)												
Median type								None			None	
Median storage veh)												
Upstream signal (ft)												
pX, platoon unblocked												
vC, conflicting volume	1660	1655	465	1700	1630	670	510			740		
vC1, stage 1 conf vol												
vC2, stage 2 conf vol												
vCu, unblocked vol	1660	1655	465	1700	1630	670	510			740		
tC, single (s)	7.1	6.5	6.2	7.1	6.5	6.2	4.1			4.1		
tC, 2 stage (s)												
tF (s)	3.5	4.0	3.3	3.5	4.0	3.3	2.2			2.2		
p0 queue free %	0	0	90	0	1	77	83			95		
cM capacity (veh/h)	3	78	599	0	80	460	1060			876		

Direction, Lane #	EB 1	EB 2	WB 1	NB 1	NB 2	SB 1	SB 2
Volume Total	250	260	245	185	740	40	510
Volume Left	250	0	60	185	0	40	0
Volume Right	0	60	105	0	140	0	90
cSH	3	97	0	1060	1700	876	1700
Volume to Capacity	97.81	2.67	Err	0.17	0.44	0.05	0.30
Queue Length 95th (ft)	Err	609	Err	16	0	4	0
Control Delay (s)	Err	850.7	Err	9.1	0.0	9.3	0.0
Lane LOS	F	F	F	A		A	
Approach Delay (s)	5335.2		Err	1.8		0.7	
Approach LOS	F		F				

Intersection Summary			
Average Delay	Err		
Intersection Capacity Utilization	86.5%	ICU Level of Service	E
Analysis Period (min)	15		

Movement	EBL	EBT	EBR	WBL	WBT	WBR	NBL	NBT	NBR	SBL	SBT	SBR
Lane Configurations												
Volume (veh/h)	200	50	40	70	135	135	185	575	165	35	470	50
Sign Control		Stop			Stop			Free			Free	
Grade		0%			0%			0%			0%	
Peak Hour Factor	1.00	1.00	1.00	1.00	1.00	1.00	1.00	1.00	1.00	1.00	1.00	1.00
Hourly flow rate (vph)	200	50	40	70	135	135	185	575	165	35	470	50
Pedestrians												
Lane Width (ft)												
Walking Speed (ft/s)												
Percent Blockage												
Right turn flare (veh)												
Median type								None			None	
Median storage veh)												
Upstream signal (ft)												
pX, platoon unblocked												
vC, conflicting volume	1712	1675	495	1632	1618	658	520			740		
vC1, stage 1 conf vol												
vC2, stage 2 conf vol												
vCu, unblocked vol	1712	1675	495	1632	1618	658	520			740		
tC, single (s)	7.1	6.5	6.2	7.1	6.5	6.2	4.1			4.1		
tC, 2 stage (s)												
tF (s)	3.5	4.0	3.3	3.5	4.0	3.3	2.2			2.2		
p0 queue free %	0	34	93	0	0	71	82			96		
cM capacity (veh/h)	0	76	577	31	82	468	1051			876		

Direction, Lane #	EB 1	EB 2	WB 1	WB 2	NB 1	NB 2	SB 1	SB 2
Volume Total	200	90	70	270	185	740	35	520
Volume Left	200	0	70	0	185	0	35	0
Volume Right	0	40	0	135	0	165	0	50
cSH	0	124	31	140	1051	1700	876	1700
Volume to Capacity	Err	0.73	2.27	1.93	0.18	0.44	0.04	0.31
Queue Length 95th (ft)	Err	102	203	527	16	0	3	0
Control Delay (s)	Err	88.4	855.0	497.0	9.2	0.0	9.3	0.0
Lane LOS	F	F	F	F	A		A	
Approach Delay (s)	Err		570.7		1.8		0.6	
Approach LOS	F		F					

Intersection Summary			
Average Delay	Err		
Intersection Capacity Utilization	84.2%	ICU Level of Service	E
Analysis Period (min)	15		

Movement	EBL	EBT	EBR	WBL	WBT	WBR	NBL	NBT	NBR	SBL	SBT	SBR
Lane Configurations												
Volume (veh/h)	170	175	60	45	75	80	70	570	15	25	430	80
Sign Control		Stop			Stop			Free			Free	
Grade		0%			0%			0%			0%	
Peak Hour Factor	1.00	1.00	1.00	1.00	1.00	1.00	1.00	1.00	1.00	1.00	1.00	1.00
Hourly flow rate (vph)	170	175	60	45	75	80	70	570	15	25	430	80
Pedestrians												
Lane Width (ft)												
Walking Speed (ft/s)												
Percent Blockage												
Right turn flare (veh)												
Median type								TWLTL			TWLTL	
Median storage veh)								2			2	
Upstream signal (ft)												
pX, platoon unblocked												
vC, conflicting volume	1348	1245	470	1345	1278	578	510			585		
vC1, stage 1 conf vol	520	520		718	718							
vC2, stage 2 conf vol	828	725		628	560							
vCu, unblocked vol	1348	1245	470	1345	1278	578	510			585		
tC, single (s)	7.1	6.5	6.2	7.1	6.5	6.2	4.1			4.1		
tC, 2 stage (s)	6.1	5.5		6.1	5.5							
tF (s)	3.5	4.0	3.3	3.5	4.0	3.3	2.2			2.2		
p0 queue free %	14	47	90	76	77	85	93			97		
cM capacity (veh/h)	199	329	596	184	321	518	1060			995		

Direction, Lane #	EB 1	WB 1	NB 1	NB 2	SB 1	SB 2
Volume Total	405	200	70	585	25	510
Volume Left	170	45	70	0	25	0
Volume Right	60	80	0	15	0	80
cSH	272	316	1060	1700	995	1700
Volume to Capacity	1.49	0.63	0.07	0.34	0.03	0.30
Queue Length 95th (ft)	579	101	5	0	2	0
Control Delay (s)	272.6	34.1	8.6	0.0	8.7	0.0
Lane LOS	F	D	A		A	
Approach Delay (s)	272.6	34.1	0.9		0.4	
Approach LOS	F	D				

Intersection Summary			
Average Delay	65.8		
Intersection Capacity Utilization	82.8%	ICU Level of Service	E
Analysis Period (min)	15		

Movement	WBL	WBR	NBT	NBR	SBL	SBT
Lane Configurations						
Volume (veh/h)	95	330	495	45	60	285
Sign Control	Stop		Free			Free
Grade	0%		0%			0%
Peak Hour Factor	1.00	1.00	1.00	1.00	1.00	1.00
Hourly flow rate (vph)	95	330	495	45	60	285
Pedestrians						
Lane Width (ft)						
Walking Speed (ft/s)						
Percent Blockage						
Right turn flare (veh)						
Median type			None			None
Median storage veh)						
Upstream signal (ft)						
pX, platoon unblocked						
vC, conflicting volume	922	518			540	
vC1, stage 1 conf vol						
vC2, stage 2 conf vol						
vCu, unblocked vol	922	518			540	
tC, single (s)	6.4	6.2			4.1	
tC, 2 stage (s)						
tF (s)	3.5	3.3			2.2	
p0 queue free %	67	41			94	
cM capacity (veh/h)	285	562			1039	

Direction, Lane #	WB 1	NB 1	SB 1
Volume Total	425	540	345
Volume Left	95	0	60
Volume Right	330	45	0
cSH	461	1700	1039
Volume to Capacity	0.92	0.32	0.06
Queue Length 95th (ft)	264	0	5
Control Delay (s)	54.6	0.0	2.0
Lane LOS	F		A
Approach Delay (s)	54.6	0.0	2.0
Approach LOS	F		

Intersection Summary			
Average Delay	18.2		
Intersection Capacity Utilization	82.7%	ICU Level of Service	E
Analysis Period (min)	15		

Movement	EBL	EBT	WBT	WBR	SBL	SBR
Lane Configurations						
Volume (veh/h)	40	130	315	105	25	110
Sign Control		Free	Free		Stop	
Grade		0%	0%		0%	
Peak Hour Factor	1.00	1.00	1.00	1.00	1.00	1.00
Hourly flow rate (vph)	40	130	315	105	25	110
Pedestrians						
Lane Width (ft)						
Walking Speed (ft/s)						
Percent Blockage						
Right turn flare (veh)						
Median type		None	None			
Median storage veh)						
Upstream signal (ft)						
pX, platoon unblocked						
vC, conflicting volume	420				578	368
vC1, stage 1 conf vol						
vC2, stage 2 conf vol						
vCu, unblocked vol	420				578	368
tC, single (s)	4.1				6.4	6.2
tC, 2 stage (s)						
tF (s)	2.2				3.5	3.3
p0 queue free %	97				95	84
cM capacity (veh/h)	1150				465	682

Direction, Lane #	EB 1	WB 1	SB 1
Volume Total	170	420	135
Volume Left	40	0	25
Volume Right	0	105	110
cSH	1150	1700	628
Volume to Capacity	0.03	0.25	0.21
Queue Length 95th (ft)	3	0	20
Control Delay (s)	2.2	0.0	12.3
Lane LOS	A		B
Approach Delay (s)	2.2	0.0	12.3
Approach LOS			B

Intersection Summary			
Average Delay	2.8		
Intersection Capacity Utilization	51.4%	ICU Level of Service	A
Analysis Period (min)	15		

Movement	EBL	EBT	EBR	WBL	WBT	WBR	NBL	NBT	NBR	SBL	SBT	SBR
Lane Configurations												
Volume (veh/h)	25	10	220	50	15	15	420	665	5	15	485	65
Sign Control		Stop			Stop			Free			Free	
Grade		0%			0%			0%			0%	
Peak Hour Factor	1.00	1.00	1.00	1.00	1.00	1.00	1.00	1.00	1.00	1.00	1.00	1.00
Hourly flow rate (vph)	25	10	220	50	15	15	420	665	5	15	485	65
Pedestrians												
Lane Width (ft)												
Walking Speed (ft/s)												
Percent Blockage												
Right turn flare (veh)			6									
Median type								None			TWLTL	
Median storage veh)											2	
Upstream signal (ft)								1262				
pX, platoon unblocked												
vC, conflicting volume	2075	2058	518	2138	2088	668	550			670		
vC1, stage 1 conf vol	548	548		1508	1508							
vC2, stage 2 conf vol	1528	1510		630	580							
vCu, unblocked vol	2075	2058	518	2138	2088	668	550			670		
tC, single (s)	7.1	6.5	6.2	7.1	6.5	6.2	4.1			4.1		
tC, 2 stage (s)	6.1	5.5		6.1	5.5							
tF (s)	3.5	4.0	3.3	3.5	4.0	3.3	2.2			2.2		
p0 queue free %	56	89	61	0	77	97	59			98		
cM capacity (veh/h)	57	91	562	14	66	462	1030			930		

Direction, Lane #	EB 1	WB 1	NB 1	NB 2	SB 1	SB 2
Volume Total	255	80	420	670	15	550
Volume Left	25	50	420	0	15	0
Volume Right	220	15	0	5	0	65
cSH	486	20	1030	1700	930	1700
Volume to Capacity	0.52	3.92	0.41	0.39	0.02	0.32
Queue Length 95th (ft)	75	Err	50	0	1	0
Control Delay (s)	28.1	Err	10.9	0.0	8.9	0.0
Lane LOS	D	F	B		A	
Approach Delay (s)	28.1	Err	4.2		0.2	
Approach LOS	D	F				

Intersection Summary			
Average Delay	407.9		
Intersection Capacity Utilization	73.9%	ICU Level of Service	D
Analysis Period (min)	15		

Movement	EBL	EBT	EBR	WBL	WBT	WBR	NBL	NBT	NBR	SBL	SBT	SBR
Lane Configurations												
Volume (vph)	250	415	25	40	310	350	25	445	155	390	220	145
Ideal Flow (vphpl)	1900	1900	1900	1900	1900	1900	1900	1900	1900	1900	1900	1900
Total Lost time (s)	4.0	4.0		4.0	4.0	4.0	4.0	4.0		4.0	4.0	
Lane Util. Factor	1.00	1.00		1.00	1.00	1.00	1.00	1.00		1.00	1.00	
Frt	1.00	0.99		1.00	1.00	0.85	1.00	0.96		1.00	0.94	
Flt Protected	0.95	1.00		0.95	1.00	1.00	0.95	1.00		0.95	1.00	
Satd. Flow (prot)	1805	1884		1805	1900	1615	1805	1826		1805	1787	
Flt Permitted	0.95	1.00		0.95	1.00	1.00	0.95	1.00		0.95	1.00	
Satd. Flow (perm)	1805	1884		1805	1900	1615	1805	1826		1805	1787	
Peak-hour factor, PHF	1.00	1.00	1.00	1.00	1.00	1.00	1.00	1.00	1.00	1.00	1.00	1.00
Adj. Flow (vph)	250	415	25	40	310	350	25	445	155	390	220	145
RTOR Reduction (vph)	0	2	0	0	0	248	0	13	0	0	22	0
Lane Group Flow (vph)	250	438	0	40	310	102	25	587	0	390	343	0
Heavy Vehicles (%)	0%	0%	0%	0%	0%	0%	0%	0%	0%	0%	0%	0%
Turn Type	Prot			Prot		Perm	Prot			Prot		
Protected Phases	5	2		1	6		3	8		7	4	
Permitted Phases						6						
Actuated Green, G (s)	8.1	25.2		2.7	19.8	19.8	1.8	35.8		9.2	43.2	
Effective Green, g (s)	10.1	27.2		4.7	21.8	21.8	3.8	37.8		11.2	45.2	
Actuated g/C Ratio	0.10	0.28		0.05	0.22	0.22	0.04	0.39		0.12	0.47	
Clearance Time (s)	6.0	6.0		6.0	6.0	6.0	6.0	6.0		6.0	6.0	
Vehicle Extension (s)	2.4	2.7		2.7	2.7	2.7	2.6	2.5		2.6	2.5	
Lane Grp Cap (vph)	188	529		88	427	363	71	712		209	834	
v/s Ratio Prot	c0.14	c0.23		0.02	0.16		0.01	c0.32		c0.22	0.19	
v/s Ratio Perm						0.06						
v/c Ratio	1.33	0.83		0.45	0.73	0.28	0.35	0.82		1.87	0.41	
Uniform Delay, d1	43.4	32.7		44.9	34.8	31.1	45.4	26.6		42.9	17.1	
Progression Factor	1.00	1.00		1.00	1.00	1.00	1.00	1.00		1.00	1.00	
Incremental Delay, d2	180.2	10.2		3.1	5.8	0.4	2.4	7.6		407.5	0.2	
Delay (s)	223.6	42.8		48.0	40.6	31.4	47.7	34.1		450.3	17.3	
Level of Service	F	D		D	D	C	D	C		F	B	
Approach Delay (s)		108.3			36.4			34.7			241.0	
Approach LOS		F			D			C			F	

Intersection Summary			
HCM Average Control Delay	109.7	HCM Level of Service	F
HCM Volume to Capacity ratio	1.01		
Actuated Cycle Length (s)	96.9	Sum of lost time (s)	12.0
Intersection Capacity Utilization	98.0%	ICU Level of Service	F
Analysis Period (min)	15		

c Critical Lane Group

Movement	EBL	EBT	EBR	WBL	WBT	WBR	NBL	NBT	NBR	SBL	SBT	SBR
Lane Configurations												
Volume (vph)	205	915	5	5	530	250	5	5	5	325	5	95
Ideal Flow (vphpl)	1900	1900	1900	1900	1900	1900	1900	1900	1900	1900	1900	1900
Total Lost time (s)	4.0	4.0		4.0	4.0	4.0		4.0			4.0	4.0
Lane Util. Factor	1.00	0.95		1.00	1.00	1.00		1.00			1.00	1.00
Frt	1.00	1.00		1.00	1.00	0.85		0.95			1.00	0.85
Flt Protected	0.95	1.00		0.95	1.00	1.00		0.98			0.95	1.00
Satd. Flow (prot)	1805	3607		1805	1900	1615		1785			1811	1615
Flt Permitted	0.95	1.00		0.95	1.00	1.00		1.00			0.95	1.00
Satd. Flow (perm)	1805	3607		1805	1900	1615		1814			1811	1615
Peak-hour factor, PHF	1.00	1.00	1.00	1.00	1.00	1.00	1.00	1.00	1.00	1.00	1.00	1.00
Adj. Flow (vph)	205	915	5	5	530	250	5	5	5	325	5	95
RTOR Reduction (vph)	0	0	0	0	0	156	0	5	0	0	0	73
Lane Group Flow (vph)	205	920	0	5	530	94	0	10	0	0	330	22
Heavy Vehicles (%)	0%	0%	0%	0%	0%	0%	0%	0%	0%	0%	0%	0%
Turn Type	Prot			Prot		Perm	Perm			Split		Perm
Protected Phases	5	2		1	6			8		4	4	
Permitted Phases						6	8					4
Actuated Green, G (s)	12.4	41.9		0.8	29.3	29.3		1.6			17.2	17.2
Effective Green, g (s)	14.4	43.9		1.8	31.3	31.3		2.6			19.2	19.2
Actuated g/C Ratio	0.17	0.53		0.02	0.37	0.37		0.03			0.23	0.23
Clearance Time (s)	6.0	6.0		5.0	6.0	6.0		5.0			6.0	6.0
Vehicle Extension (s)	2.4	2.7		2.4	2.7	2.7		2.5			2.5	2.5
Lane Grp Cap (vph)	311	1896		39	712	605		56			416	371
v/s Ratio Prot	c0.11	0.25		0.00	c0.28						c0.18	
v/s Ratio Perm						0.06		c0.01				0.01
v/c Ratio	0.66	0.48		0.13	0.74	0.15		0.18			0.79	0.06
Uniform Delay, d1	32.3	12.6		40.1	22.6	17.3		39.4			30.3	25.1
Progression Factor	1.00	1.00		1.00	1.00	1.00		1.00			1.00	1.00
Incremental Delay, d2	4.3	0.2		1.0	4.1	0.1		1.1			9.7	0.0
Delay (s)	36.6	12.8		41.1	26.7	17.4		40.5			40.0	25.1
Level of Service	D	B		D	C	B		D			D	C
Approach Delay (s)		17.1			23.9			40.5			36.7	
Approach LOS		B			C			D			D	

Intersection Summary			
HCM Average Control Delay	23.0	HCM Level of Service	C
HCM Volume to Capacity ratio	0.72		
Actuated Cycle Length (s)	83.5	Sum of lost time (s)	16.0
Intersection Capacity Utilization	74.2%	ICU Level of Service	D
Analysis Period (min)	15		

c Critical Lane Group

Movement	EBL	EBT	EBR	WBL	WBT	WBR	NBL	NBT	NBR	SBL	SBT	SBR
Lane Configurations												
Volume (vph)	380	1130	150	45	465	115	205	700	330	130	225	150
Ideal Flow (vphpl)	1900	1900	1900	1900	1900	1900	1900	1900	1900	1900	1900	1900
Total Lost time (s)	4.0	4.0		4.0	4.0		4.0	4.0		4.0	4.0	
Lane Util. Factor	1.00	0.95		1.00	0.95		1.00	0.95		1.00	0.95	
Frt	1.00	0.98		1.00	0.97		1.00	0.95		1.00	0.94	
Flt Protected	0.95	1.00		0.95	1.00		0.95	1.00		0.95	1.00	
Satd. Flow (prot)	1805	3547		1805	3503		1805	3437		1805	3393	
Flt Permitted	0.95	1.00		0.95	1.00		0.95	1.00		0.95	1.00	
Satd. Flow (perm)	1805	3547		1805	3503		1805	3437		1805	3393	
Peak-hour factor, PHF	1.00	1.00	1.00	1.00	1.00	1.00	1.00	1.00	1.00	1.00	1.00	1.00
Adj. Flow (vph)	380	1130	150	45	465	115	205	700	330	130	225	150
RTOR Reduction (vph)	0	8	0	0	18	0	0	47	0	0	94	0
Lane Group Flow (vph)	380	1272	0	45	562	0	205	983	0	130	281	0
Heavy Vehicles (%)	0%	0%	0%	0%	0%	0%	0%	0%	0%	0%	0%	0%
Turn Type	Prot			Prot			Prot			Prot		
Protected Phases	5	2		1	6		3	8		7	4	
Permitted Phases												
Actuated Green, G (s)	25.6	45.4		5.6	25.4		16.3	33.8		9.7	27.2	
Effective Green, g (s)	26.1	45.9		6.1	25.9		16.8	34.3		10.2	27.7	
Actuated g/C Ratio	0.23	0.41		0.05	0.23		0.15	0.30		0.09	0.25	
Clearance Time (s)	4.5	4.5		4.5	4.5		4.5	4.5		4.5	4.5	
Vehicle Extension (s)	3.0	1.0		3.0	1.0		3.0	1.0		3.0	1.0	
Lane Grp Cap (vph)	419	1447		98	806		270	1048		164	835	
v/s Ratio Prot	c0.21	c0.36		0.02	0.16		c0.11	c0.29		0.07	0.08	
v/s Ratio Perm												
v/c Ratio	0.91	0.88		0.46	0.70		0.76	0.94		0.79	0.34	
Uniform Delay, d1	42.0	30.7		51.6	39.7		45.9	38.1		50.1	34.8	
Progression Factor	1.00	1.00		1.00	1.00		1.00	1.00		1.00	1.00	
Incremental Delay, d2	22.8	6.2		3.4	2.1		11.6	14.8		22.5	0.1	
Delay (s)	64.8	36.9		55.0	41.8		57.5	52.9		72.6	34.9	
Level of Service	E	D		D	D		E	D		E	C	
Approach Delay (s)		43.3			42.8			53.6			44.6	
Approach LOS		D			D			D			D	

Intersection Summary			
HCM Average Control Delay	46.6	HCM Level of Service	D
HCM Volume to Capacity ratio	0.86		
Actuated Cycle Length (s)	112.5	Sum of lost time (s)	8.0
Intersection Capacity Utilization	89.8%	ICU Level of Service	E
Analysis Period (min)	15		

c Critical Lane Group

Movement	EBL	EBT	EBR	WBL	WBT	WBR	NBL	NBT	NBR	SBL	SBT	SBR
Lane Configurations												
Volume (vph)	235	195	150	50	60	300	160	590	20	280	140	135
Ideal Flow (vphpl)	1900	1900	1900	1900	1900	1900	1900	1900	1900	1900	1900	1900
Total Lost time (s)	4.5	4.5		4.5	4.5		4.5	4.5		4.5	4.5	4.5
Lane Util. Factor	1.00	1.00		1.00	1.00		1.00	1.00		1.00	1.00	1.00
Frt	1.00	0.93		1.00	0.88		1.00	1.00		1.00	1.00	0.85
Flt Protected	0.95	1.00		0.95	1.00		0.95	1.00		0.95	1.00	1.00
Satd. Flow (prot)	1770	1741		1770	1630		1770	1854		1770	1863	1583
Flt Permitted	0.19	1.00		0.49	1.00		0.67	1.00		0.10	1.00	1.00
Satd. Flow (perm)	348	1741		905	1630		1244	1854		186	1863	1583
Peak-hour factor, PHF	1.00	1.00	1.00	1.00	1.00	1.00	1.00	1.00	1.00	1.00	1.00	1.00
Adj. Flow (vph)	235	195	150	50	60	300	160	590	20	280	140	135
RTOR Reduction (vph)	0	22	0	0	152	0	0	1	0	0	0	74
Lane Group Flow (vph)	235	323	0	50	208	0	160	609	0	280	140	61
Turn Type	pm+pt			pm+pt			pm+pt			pm+pt		Perm
Protected Phases	3	8		7	4		1	6		5	2	
Permitted Phases	8			4			6			2		2
Actuated Green, G (s)	34.9	27.9		20.4	17.4		43.1	36.0		56.5	45.4	45.4
Effective Green, g (s)	34.4	27.4		19.4	16.9		42.1	35.5		56.0	44.9	44.9
Actuated g/C Ratio	0.35	0.28		0.20	0.17		0.42	0.36		0.56	0.45	0.45
Clearance Time (s)	4.0	4.0		4.0	4.0		4.0	4.0		4.0	4.0	4.0
Vehicle Extension (s)	2.5	2.5		2.5	2.5		2.5	2.5		2.5	2.5	2.5
Lane Grp Cap (vph)	306	480		198	277		562	662		360	842	715
v/s Ratio Prot	c0.10	0.19		0.01	0.13		0.02	c0.33		c0.13	0.08	
v/s Ratio Perm	c0.17			0.04			0.10			0.31		0.04
v/c Ratio	0.77	0.67		0.25	0.75		0.28	0.92		0.78	0.17	0.09
Uniform Delay, d1	26.2	32.0		33.2	39.3		18.2	30.6		25.4	16.2	15.5
Progression Factor	1.00	1.00		1.00	1.00		1.00	1.00		1.00	1.00	1.00
Incremental Delay, d2	10.5	3.4		0.5	10.4		0.2	17.8		9.8	0.1	0.0
Delay (s)	36.8	35.4		33.6	49.7		18.4	48.4		35.2	16.2	15.6
Level of Service	D	D		C	D		B	D		D	B	B
Approach Delay (s)		35.9			47.7			42.2			25.6	
Approach LOS		D			D			D			C	

Intersection Summary			
HCM Average Control Delay	37.6	HCM Level of Service	D
HCM Volume to Capacity ratio	0.82		
Actuated Cycle Length (s)	99.4	Sum of lost time (s)	13.5
Intersection Capacity Utilization	97.4%	ICU Level of Service	F
Analysis Period (min)	15		
c Critical Lane Group			

General & Site Information

Analyst:	CMG
Agency/Company:	David Evans and Associates, Inc.
Date:	7/16/2012
Project Name:	SoHi Transportation Plan
Intersection:	Alexand at Brookwood
Analysis Time Period:	AM Peak Hour
Jurisdiction:	City of Hillsboro
Year:	2035 with South Hillsboro

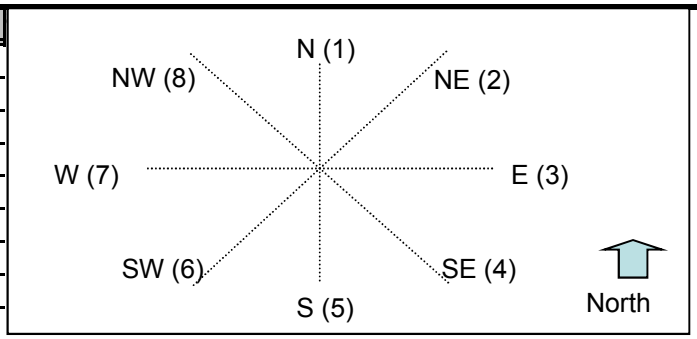

Volumes		Roundabout Approach/Entry Legs							
		N (1)	NE (2)	E (3)	SE (4)	S (5)	SW (6)	W (7)	NW (8)
Input Volumes to Leg #	N (1), vph	185		225		345		210	
	NE (2), vph								
	E (3), vph	110				45		95	
	SE (4), vph								
	S (5), vph	200		10				5	
	SW (6), vph								
	W (7), vph	35		25		5			
	NW (8), vph								
Output	Total Vehicles	530	0	260	0	395	0	310	0

Volume Characteristics	N	NE	E	SE	S	SW	W	NW
% Trucks	0.0	0.0	0.0	0.0	0.0	0.0	0.0	0.0
E_t	2.0	2.0	2.0	2.0	2.0	2.0	2.0	2.0
PHF	1.00	1.00	1.00	1.00	1.00	1.00	1.00	1.00
F_{HV}	1.000	1.000	1.000	1.000	1.000	1.000	1.000	1.000

Entry/Conflicting Flows	N	NE	E	SE	S	SW	W	NW
Flow to Leg # N (1), pcu/h	185	0	225	0	345	0	210	0
NE (2), pcu/h	0	0	0	0	0	0	0	0
E (3), pcu/h	110	0	0	0	45	0	95	0
SE (4), pcu/h	0	0	0	0	0	0	0	0
S (5), pcu/h	200	0	10	0	0	0	5	0
SW (6), pcu/h	0	0	0	0	0	0	0	0
W (7), pcu/h	35	0	25	0	5	0	0	0
NW (8), pcu/h	0	0	0	0	0	0	0	0
Entry flow, pcu/h	530	0	260	0	395	0	310	0
Conflicting flow, pcu/h	40	1005	745	995	600	815	505	570

Results	N	NE	E	SE	S	SW	W	NW
Entry Capacity, pcu/h	1086	NA	536	NA	620	NA	682	NA
Leg v/c ratio	0.49		0.48		0.64		0.45	
Control Delay, s/pcu	6.4		12.9		15.4		9.6	
LOS	A		B		C		A	
95th Percentile Queue (ft)	817	0	401	0	609	0	478	0

Movement	EBL	EBT	EBR	WBL	WBT	WBR	NBL	NBT	NBR	SBL	SBT	SBR
Lane Configurations												
Volume (vph)	20	1250	505	65	1130	110	240	140	35	95	170	25
Ideal Flow (vphpl)	1900	1900	1900	1900	1900	1900	1900	1900	1900	1900	1900	1900
Total Lost time (s)	4.0	4.0		4.0	4.0		3.0	4.0		3.0	4.0	
Lane Util. Factor	1.00	0.95		1.00	0.95		0.97	1.00		1.00	1.00	
Frt	1.00	0.96		1.00	0.99		1.00	0.97		1.00	0.98	
Flt Protected	0.95	1.00		0.95	1.00		0.95	1.00		0.95	1.00	
Satd. Flow (prot)	1805	3246		1805	3562		3502	1843		1805	1863	
Flt Permitted	0.14	1.00		0.06	1.00		0.95	1.00		0.95	1.00	
Satd. Flow (perm)	267	3246		109	3562		3502	1843		1805	1863	
Peak-hour factor, PHF	1.00	1.00	1.00	1.00	1.00	1.00	1.00	1.00	1.00	1.00	1.00	1.00
Adj. Flow (vph)	20	1250	505	65	1130	110	240	140	35	95	170	25
RTOR Reduction (vph)	0	32	0	0	5	0	0	8	0	0	5	0
Lane Group Flow (vph)	20	1723	0	65	1235	0	240	167	0	95	190	0
Heavy Vehicles (%)	0%	9%	0%	0%	0%	0%	0%	0%	0%	0%	0%	0%
Turn Type	pm+pt			pm+pt			Prot			Prot		
Protected Phases	5	2		1	6		3	8		7	4	
Permitted Phases	2			6								
Actuated Green, G (s)	71.0	71.0		74.3	73.8		9.9	17.6		9.2	16.9	
Effective Green, g (s)	71.0	71.5		74.3	74.3		10.9	18.6		10.2	17.9	
Actuated g/C Ratio	0.59	0.60		0.62	0.62		0.09	0.16		0.08	0.15	
Clearance Time (s)	4.0	4.5		4.0	4.5		4.0	5.0		4.0	5.0	
Vehicle Extension (s)	2.3	4.3		2.3	4.3		2.5	2.5		2.5	2.5	
Lane Grp Cap (vph)	182	1934		134	2205		318	286		153	278	
v/s Ratio Prot	0.00	c0.53		0.02	c0.35		c0.07	0.09		0.05	c0.10	
v/s Ratio Perm	0.06			0.28								
v/c Ratio	0.11	0.89		0.49	0.56		0.75	0.59		0.62	0.68	
Uniform Delay, d1	13.1	20.9		41.6	13.3		53.2	47.1		53.0	48.4	
Progression Factor	1.00	1.00		1.00	1.00		1.00	1.00		1.00	1.00	
Incremental Delay, d2	0.2	6.7		1.6	1.0		9.3	2.5		6.6	6.2	
Delay (s)	13.2	27.6		43.2	14.4		62.6	49.6		59.6	54.6	
Level of Service	B	C		D	B		E	D		E	D	
Approach Delay (s)		27.4			15.8			57.1			56.2	
Approach LOS		C			B			E			E	

Intersection Summary			
HCM Average Control Delay	28.9	HCM Level of Service	C
HCM Volume to Capacity ratio	0.81		
Actuated Cycle Length (s)	120.0	Sum of lost time (s)	11.0
Intersection Capacity Utilization	81.3%	ICU Level of Service	D
Analysis Period (min)	15		

c Critical Lane Group

Movement	EBL	EBT	EBR	WBL	WBT	WBR	NBL	NBT	NBR	SBL	SBT	SBR
Lane Configurations												
Volume (vph)	145	550	140	50	310	200	70	300	50	290	315	85
Ideal Flow (vphpl)	1900	1900	1900	1900	1900	1900	1900	1900	1900	1900	1900	1900
Total Lost time (s)	4.0	4.0		4.0	4.0		4.0	4.0	5.7	4.0	4.0	
Lane Util. Factor	1.00	1.00		1.00	1.00		1.00	1.00	1.00	1.00	1.00	
Frt	1.00	0.97		1.00	0.94		1.00	1.00	0.85	1.00	0.97	
Flt Protected	0.95	1.00		0.95	1.00		0.95	1.00	1.00	0.95	1.00	
Satd. Flow (prot)	1805	1835		1805	1788		1805	1900	1615	1805	1825	
Flt Permitted	0.95	1.00		0.95	1.00		0.95	1.00	1.00	0.95	1.00	
Satd. Flow (perm)	1805	1835		1805	1788		1805	1900	1615	1805	1825	
Peak-hour factor, PHF	1.00	1.00	1.00	1.00	1.00	1.00	1.00	1.00	1.00	1.00	1.00	1.00
Adj. Flow (vph)	145	550	140	50	310	200	70	300	50	290	315	85
RTOR Reduction (vph)	0	10	0	0	27	0	0	0	41	0	10	0
Lane Group Flow (vph)	145	680	0	50	483	0	70	300	9	290	390	0
Heavy Vehicles (%)	0%	0%	2%	0%	0%	0%	0%	0%	0%	0%	1%	0%
Turn Type	Prot			Prot			Prot		Perm	Prot		
Protected Phases	5	2		1	6		7	4		3	8	
Permitted Phases									4			
Actuated Green, G (s)	7.6	33.4		2.8	28.4		4.6	15.4	15.4	15.2	26.2	
Effective Green, g (s)	9.1	34.4		4.3	29.6		4.6	16.6	14.9	15.2	27.2	
Actuated g/C Ratio	0.11	0.40		0.05	0.34		0.05	0.19	0.17	0.18	0.31	
Clearance Time (s)	5.5	5.0		5.5	5.2		4.0	5.2	5.2	4.0	5.0	
Vehicle Extension (s)	3.1	2.5		3.1	2.5		2.5	2.5	2.5	2.5	2.5	
Lane Grp Cap (vph)	190	730		90	612		96	365	278	317	574	
v/s Ratio Prot	c0.08	c0.37		0.03	0.27		0.04	c0.16		c0.16	0.21	
v/s Ratio Perm									0.01			
v/c Ratio	0.76	0.93		0.56	0.79		0.73	0.82	0.03	0.91	0.68	
Uniform Delay, d1	37.7	24.9		40.2	25.6		40.3	33.5	29.8	35.0	25.8	
Progression Factor	1.00	1.00		1.00	1.00		1.00	1.00	1.00	1.00	1.00	
Incremental Delay, d2	16.6	18.5		7.4	6.5		22.6	13.6	0.0	29.5	2.9	
Delay (s)	54.2	43.5		47.5	32.1		63.0	47.1	29.8	64.5	28.7	
Level of Service	D	D		D	C		E	D	C	E	C	
Approach Delay (s)		45.3			33.5			47.7			43.8	
Approach LOS		D			C			D			D	

Intersection Summary			
HCM Average Control Delay	42.6	HCM Level of Service	D
HCM Volume to Capacity ratio	0.86		
Actuated Cycle Length (s)	86.5	Sum of lost time (s)	12.0
Intersection Capacity Utilization	86.8%	ICU Level of Service	E
Analysis Period (min)	15		

c Critical Lane Group

Movement	EBL	EBT	EBR	WBL	WBT	WBR	NBL	NBT	NBR	SBL	SBT	SBR
Lane Configurations												
Volume (vph)	120	1220	135	150	920	90	155	265	160	165	360	155
Ideal Flow (vphpl)	1900	1900	1900	1900	1900	1900	1900	1900	1900	1900	1900	1900
Total Lost time (s)	4.0	4.0		4.0	4.0	4.0		4.0	4.0	4.0	4.0	4.0
Lane Util. Factor	1.00	0.95		1.00	0.95	1.00		0.95	1.00	1.00	1.00	1.00
Frt	1.00	0.99		1.00	1.00	0.85		1.00	0.85	1.00	1.00	0.85
Flt Protected	0.95	1.00		0.95	1.00	1.00		0.98	1.00	0.95	1.00	1.00
Satd. Flow (prot)	1805	3556		1805	3610	1615		3545	1615	1805	1900	1615
Flt Permitted	0.95	1.00		0.95	1.00	1.00		0.98	1.00	0.95	1.00	1.00
Satd. Flow (perm)	1805	3556		1805	3610	1615		3545	1615	1805	1900	1615
Peak-hour factor, PHF	1.00	1.00	1.00	1.00	1.00	1.00	1.00	1.00	1.00	1.00	1.00	1.00
Adj. Flow (vph)	120	1220	135	150	920	90	155	265	160	165	360	155
RTOR Reduction (vph)	0	8	0	0	0	56	0	0	135	0	0	101
Lane Group Flow (vph)	120	1347	0	150	920	34	0	420	25	165	360	54
Heavy Vehicles (%)	0%	0%	0%	0%	0%	0%	0%	0%	0%	0%	0%	0%
Turn Type	Prot			Prot		Perm	Split		Perm	Split		custom
Protected Phases	5	2		1	6		4	4		3	3	
Permitted Phases						6			4			3 5
Actuated Green, G (s)	7.7	39.5		6.0	37.8	37.8		15.9	15.9	21.1	21.1	33.8
Effective Green, g (s)	7.7	40.0		6.0	38.3	38.3		15.9	15.9	22.1	22.1	34.8
Actuated g/C Ratio	0.08	0.40		0.06	0.38	0.38		0.16	0.16	0.22	0.22	0.35
Clearance Time (s)	4.0	4.5		4.0	4.5	4.5		4.0	4.0	5.0	5.0	
Vehicle Extension (s)	2.3	4.3		2.3	4.3	4.3		2.3	2.3	2.3	2.3	
Lane Grp Cap (vph)	139	1422		108	1383	619		564	257	399	420	562
v/s Ratio Prot	0.07	c0.38		c0.08	0.25			c0.12		0.09	c0.19	
v/s Ratio Perm						0.02			0.02			0.03
v/c Ratio	0.86	0.95		1.39	0.67	0.06		0.74	0.10	0.41	0.86	0.10
Uniform Delay, d1	45.6	29.0		47.0	25.5	19.4		40.1	35.9	33.4	37.4	22.0
Progression Factor	1.00	1.00		1.00	1.00	1.00		1.00	1.00	1.00	1.00	1.00
Incremental Delay, d2	38.3	14.2		221.9	2.5	0.2		4.9	0.1	0.4	15.4	0.0
Delay (s)	83.9	43.2		268.9	28.1	19.6		45.0	36.0	33.8	52.8	22.0
Level of Service	F	D		F	C	B		D	D	C	D	C
Approach Delay (s)		46.5			58.6			42.5			41.2	
Approach LOS		D			E			D			D	

Intersection Summary			
HCM Average Control Delay	48.6	HCM Level of Service	D
HCM Volume to Capacity ratio	0.87		
Actuated Cycle Length (s)	100.0	Sum of lost time (s)	12.0
Intersection Capacity Utilization	90.4%	ICU Level of Service	E
Analysis Period (min)	15		

c Critical Lane Group

Movement	EBL	EBT	EBR	WBL	WBT	WBR	NBL	NBT	NBR	SBL	SBT	SBR
Lane Configurations												
Volume (vph)	205	1455	230	350	1185	175	165	235	170	165	510	115
Ideal Flow (vphpl)	1900	1900	1900	1900	1900	1900	1900	1900	1900	1900	1900	1900
Total Lost time (s)	4.0	4.0	4.0	4.0	4.0	4.0	4.0	4.0	4.0	4.0	4.0	
Lane Util. Factor	1.00	0.95	1.00	1.00	0.95	1.00	1.00	0.95	1.00	1.00	0.95	
Frt	1.00	1.00	0.85	1.00	1.00	0.85	1.00	1.00	0.85	1.00	0.97	
Flt Protected	0.95	1.00	1.00	0.95	1.00	1.00	0.95	1.00	1.00	0.95	1.00	
Satd. Flow (prot)	1805	3610	1615	1805	3610	1615	1805	3610	1615	1805	3510	
Flt Permitted	0.95	1.00	1.00	0.95	1.00	1.00	0.95	1.00	1.00	0.95	1.00	
Satd. Flow (perm)	1805	3610	1615	1805	3610	1615	1805	3610	1615	1805	3510	
Peak-hour factor, PHF	1.00	1.00	1.00	1.00	1.00	1.00	1.00	1.00	1.00	1.00	1.00	1.00
Adj. Flow (vph)	205	1455	230	350	1185	175	165	235	170	165	510	115
RTOR Reduction (vph)	0	0	99	0	0	96	0	0	57	0	16	0
Lane Group Flow (vph)	205	1455	131	350	1185	79	165	235	113	165	609	0
Heavy Vehicles (%)	0%	0%	0%	0%	0%	0%	0%	0%	0%	0%	0%	0%
Turn Type	Prot		Perm	Prot		Perm	Prot		pt+ov	Prot		
Protected Phases	5	2		1	6		3	8	8 1	7	4	
Permitted Phases			2			6						
Actuated Green, G (s)	14.8	52.6	52.6	15.0	52.8	52.8	13.3	12.5	27.5	22.0	21.2	
Effective Green, g (s)	14.8	54.0	54.0	15.0	54.2	54.2	13.3	13.0	28.5	22.0	21.7	
Actuated g/C Ratio	0.12	0.45	0.45	0.12	0.45	0.45	0.11	0.11	0.24	0.18	0.18	
Clearance Time (s)	4.0	5.4	5.4	4.0	5.4	5.4	4.0	4.5		4.0	4.5	
Vehicle Extension (s)	2.3	4.4	4.4	2.3	4.4	4.4	2.3	2.3		2.3	2.3	
Lane Grp Cap (vph)	223	1625	727	226	1631	729	200	391	384	331	635	
v/s Ratio Prot	0.11	c0.40		c0.19	0.33		c0.09	0.07	0.07	0.09	c0.17	
v/s Ratio Perm			0.08			0.05						
v/c Ratio	0.92	0.90	0.18	1.55	0.73	0.11	0.82	0.60	0.29	0.50	0.96	
Uniform Delay, d1	52.0	30.4	19.8	52.5	26.9	19.0	52.2	51.0	37.5	44.0	48.7	
Progression Factor	1.00	1.00	1.00	1.08	0.77	1.04	1.00	1.00	1.00	1.00	1.00	
Incremental Delay, d2	38.1	8.1	0.5	265.5	2.6	0.3	22.7	2.0	0.2	0.7	25.4	
Delay (s)	90.1	38.5	20.3	322.5	23.2	19.9	74.9	53.1	37.8	44.7	74.1	
Level of Service	F	D	C	F	C	B	E	D	D	D	E	
Approach Delay (s)		41.9			84.1			54.8			68.0	
Approach LOS		D			F			D			E	

Intersection Summary			
HCM Average Control Delay	62.1	HCM Level of Service	E
HCM Volume to Capacity ratio	0.99		
Actuated Cycle Length (s)	120.0	Sum of lost time (s)	16.0
Intersection Capacity Utilization	99.9%	ICU Level of Service	F
Analysis Period (min)	15		

c Critical Lane Group

Movement	EBL	EBT	EBR	WBL	WBT	WBR	NBL	NBT	NBR	SBL	SBT	SBR
Lane Configurations												
Volume (veh/h)	0	0	250	0	0	90	0	480	60	0	750	340
Sign Control		Stop			Stop			Free			Free	
Grade		0%			0%			0%			0%	
Peak Hour Factor	1.00	1.00	1.00	1.00	1.00	1.00	1.00	1.00	1.00	1.00	1.00	1.00
Hourly flow rate (vph)	0	0	250	0	0	90	0	480	60	0	750	340
Pedestrians					1500							
Lane Width (ft)					12.0							
Walking Speed (ft/s)					4.0							
Percent Blockage					80							
Right turn flare (veh)												
Median type								None			None	
Median storage veh)												
Upstream signal (ft)											280	
pX, platoon unblocked	0.82	0.82	0.82	0.82	0.82		0.82					
vC, conflicting volume	1350	2790	750	3010	3100	2010	1090			2040		
vC1, stage 1 conf vol												
vC2, stage 2 conf vol												
vCu, unblocked vol	1318	3069	588	3336	3446	2010	1001			2040		
tC, single (s)	7.1	6.5	6.2	7.1	6.5	6.2	4.1			4.1		
tC, 2 stage (s)												
tF (s)	3.5	4.0	3.3	3.5	4.0	3.3	2.2			2.2		
p0 queue free %	0	100	41	100	100	0	100			100		
cM capacity (veh/h)	0	2	422	0	1	15	575			56		

Direction, Lane #	EB 1	WB 1	NB 1	SB 1	SB 2
Volume Total	250	90	540	750	340
Volume Left	0	0	0	0	0
Volume Right	250	90	60	0	340
cSH	422	15	1700	1700	1700
Volume to Capacity	0.59	6.00	0.32	0.44	0.20
Queue Length 95th (ft)	93	Err	0	0	0
Control Delay (s)	25.2	Err	0.0	0.0	0.0
Lane LOS	D	F			
Approach Delay (s)	25.2	Err	0.0	0.0	
Approach LOS	D	F			

Intersection Summary			
Average Delay	460.0		
Intersection Capacity Utilization	61.6%	ICU Level of Service	B
Analysis Period (min)	15		

Movement	EBL	EBR	NBL	NBT	SBT	SBR
Lane Configurations						
Volume (veh/h)	240	25	30	165	445	210
Sign Control	Stop			Free	Free	
Grade	0%			0%	0%	
Peak Hour Factor	1.00	1.00	1.00	1.00	1.00	1.00
Hourly flow rate (vph)	240	25	30	165	445	210
Pedestrians						
Lane Width (ft)						
Walking Speed (ft/s)						
Percent Blockage						
Right turn flare (veh)						
Median type				None	None	
Median storage veh)						
Upstream signal (ft)						
pX, platoon unblocked						
vC, conflicting volume	775	550	655			
vC1, stage 1 conf vol						
vC2, stage 2 conf vol						
vCu, unblocked vol	775	550	655			
tC, single (s)	6.4	6.2	4.1			
tC, 2 stage (s)						
tF (s)	3.5	3.3	2.2			
p0 queue free %	32	95	97			
cM capacity (veh/h)	355	535	932			

Direction, Lane #	EB 1	EB 2	NB 1	NB 2	SB 1
Volume Total	240	25	30	165	655
Volume Left	240	0	30	0	0
Volume Right	0	25	0	0	210
cSH	355	535	932	1700	1700
Volume to Capacity	0.68	0.05	0.03	0.10	0.39
Queue Length 95th (ft)	118	4	2	0	0
Control Delay (s)	34.0	12.1	9.0	0.0	0.0
Lane LOS	D	B	A		
Approach Delay (s)	31.9		1.4		0.0
Approach LOS	D				

Intersection Summary			
Average Delay	7.8		
Intersection Capacity Utilization	57.0%	ICU Level of Service	B
Analysis Period (min)	15		

Movement	EBL	EBT	EBR	WBL	WBT	WBR	NBL	NBT	NBR	SBL	SBT	SBR
Lane Configurations												
Volume (vph)	165	1395	270	170	1330	120	125	180	170	25	315	225
Ideal Flow (vphpl)	1900	1900	1900	1900	1900	1900	1900	1900	1900	1900	1900	1900
Total Lost time (s)	4.0	4.0	4.0	4.0	4.0		4.0	4.0		4.0	4.0	
Lane Util. Factor	1.00	0.95	1.00	1.00	0.95		1.00	1.00		1.00	1.00	
Frt	1.00	1.00	0.85	1.00	0.99		1.00	0.93		1.00	0.94	
Flt Protected	0.95	1.00	1.00	0.95	1.00		0.95	1.00		0.95	1.00	
Satd. Flow (prot)	1770	3505	1599	1641	3467		1770	1711		1770	1717	
Flt Permitted	0.95	1.00	1.00	0.95	1.00		0.95	1.00		0.95	1.00	
Satd. Flow (perm)	1770	3505	1599	1641	3467		1770	1711		1770	1717	
Peak-hour factor, PHF	1.00	1.00	1.00	1.00	1.00	1.00	1.00	1.00	1.00	1.00	1.00	1.00
Adj. Flow (vph)	165	1395	270	170	1330	120	125	180	170	25	315	225
RTOR Reduction (vph)	0	0	79	0	6	0	0	27	0	0	21	0
Lane Group Flow (vph)	165	1395	191	170	1444	0	125	323	0	25	519	0
Heavy Vehicles (%)	2%	3%	1%	10%	3%	1%	2%	1%	5%	2%	5%	2%
Turn Type	Prot		Perm	Prot			Prot			Prot		
Protected Phases	5	2		1	6		3	8		7	4	
Permitted Phases			2									
Actuated Green, G (s)	11.0	45.4	45.4	12.0	46.4		9.0	41.7		3.0	35.7	
Effective Green, g (s)	11.0	46.8	46.8	12.0	47.8		9.0	42.2		3.0	36.2	
Actuated g/C Ratio	0.09	0.39	0.39	0.10	0.40		0.08	0.35		0.02	0.30	
Clearance Time (s)	4.0	5.4	5.4	4.0	5.4		4.0	4.5		4.0	4.5	
Vehicle Extension (s)	2.3	4.5	4.5	2.3	4.5		2.5	2.5		2.5	2.5	
Lane Grp Cap (vph)	162	1367	624	164	1381		133	602		44	518	
v/s Ratio Prot	0.09	c0.40		0.10	c0.42		c0.07	0.19		0.01	c0.30	
v/s Ratio Perm			0.12									
v/c Ratio	1.02	1.02	0.31	1.04	1.05		0.94	0.54		0.57	1.00	
Uniform Delay, d1	54.5	36.6	25.4	54.0	36.1		55.2	31.1		57.9	41.9	
Progression Factor	1.04	1.09	1.28	1.30	1.01		1.00	1.00		1.00	1.00	
Incremental Delay, d2	70.0	27.7	1.1	73.0	34.8		59.0	0.7		12.9	40.0	
Delay (s)	126.7	67.5	33.4	143.2	71.1		114.3	31.8		70.8	81.9	
Level of Service	F	E	C	F	E		F	C		E	F	
Approach Delay (s)		67.8			78.7			53.5			81.4	
Approach LOS		E			E			D			F	

Intersection Summary			
HCM Average Control Delay	71.9	HCM Level of Service	E
HCM Volume to Capacity ratio	1.00		
Actuated Cycle Length (s)	120.0	Sum of lost time (s)	12.0
Intersection Capacity Utilization	100.3%	ICU Level of Service	G
Analysis Period (min)	15		

c Critical Lane Group

Movement	EBL	EBT	EBR	WBL	WBT	WBR	NBL	NBT	NBR	SBL	SBT	SBR
Lane Configurations												
Volume (vph)	195	155	230	195	165	190	70	705	75	125	1120	325
Ideal Flow (vphpl)	1900	1900	1900	1900	1900	1900	1900	1900	1900	1900	1900	1900
Total Lost time (s)	4.5	4.5		4.5	4.5		4.5	4.5		4.5	4.5	
Lane Util. Factor	1.00	1.00		1.00	1.00		1.00	0.95		1.00	0.95	
Frt	1.00	0.91		1.00	0.92		1.00	0.99		1.00	0.97	
Flt Protected	0.95	1.00		0.95	1.00		0.95	1.00		0.95	1.00	
Satd. Flow (prot)	1770	1696		1770	1713		1770	3488		1770	3420	
Flt Permitted	0.17	1.00		0.18	1.00		0.09	1.00		0.24	1.00	
Satd. Flow (perm)	320	1696		336	1713		168	3488		451	3420	
Peak-hour factor, PHF	1.00	1.00	1.00	1.00	1.00	1.00	1.00	1.00	1.00	1.00	1.00	1.00
Adj. Flow (vph)	195	155	230	195	165	190	70	705	75	125	1120	325
RTOR Reduction (vph)	0	43	0	0	31	0	0	8	0	0	25	0
Lane Group Flow (vph)	195	342	0	195	324	0	70	772	0	125	1420	0
Turn Type	pm+pt			pm+pt			pm+pt			pm+pt		
Protected Phases	3	8		7	4		1	6		5	2	
Permitted Phases	8			4			6			2		
Actuated Green, G (s)	36.5	23.8		34.3	22.7		49.9	44.8		53.7	46.7	
Effective Green, g (s)	35.5	23.3		33.3	22.2		48.9	44.3		52.7	46.2	
Actuated g/C Ratio	0.34	0.23		0.32	0.22		0.47	0.43		0.51	0.45	
Clearance Time (s)	4.0	4.0		4.0	4.0		4.0	4.0		4.0	4.0	
Vehicle Extension (s)	2.5	2.5		2.5	2.5		2.5	2.5		2.5	2.5	
Lane Grp Cap (vph)	281	383		263	368		151	1497		313	1531	
v/s Ratio Prot	c0.08	c0.20		0.08	0.19		0.02	0.22		c0.03	c0.42	
v/s Ratio Perm	0.16			0.16			0.20			0.18		
v/c Ratio	0.69	0.89		0.74	0.88		0.46	0.52		0.40	0.93	
Uniform Delay, d1	26.6	38.8		28.1	39.2		21.5	21.6		14.6	26.9	
Progression Factor	1.00	1.00		1.00	1.00		1.00	1.00		1.00	1.00	
Incremental Delay, d2	6.7	22.2		10.2	20.4		1.6	0.2		0.6	10.0	
Delay (s)	33.2	61.0		38.3	59.6		23.1	21.8		15.2	36.9	
Level of Service	C	E		D	E		C	C		B	D	
Approach Delay (s)		51.7			52.0			21.9			35.2	
Approach LOS		D			D			C			D	

Intersection Summary			
HCM Average Control Delay	37.3	HCM Level of Service	D
HCM Volume to Capacity ratio	0.79		
Actuated Cycle Length (s)	103.2	Sum of lost time (s)	9.0
Intersection Capacity Utilization	93.3%	ICU Level of Service	F
Analysis Period (min)	15		
c Critical Lane Group			

Movement	WBL	WBR	NBT	NBR	SBL	SBT
Lane Configurations						
Volume (veh/h)	190	225	290	215	290	465
Sign Control	Stop		Free			Free
Grade	0%		0%			0%
Peak Hour Factor	1.00	1.00	1.00	1.00	1.00	1.00
Hourly flow rate (vph)	190	225	290	215	290	465
Pedestrians						
Lane Width (ft)						
Walking Speed (ft/s)						
Percent Blockage						
Right turn flare (veh)						
Median type			None			None
Median storage veh)						
Upstream signal (ft)						1106
pX, platoon unblocked						
vC, conflicting volume	1442	398			505	
vC1, stage 1 conf vol						
vC2, stage 2 conf vol						
vCu, unblocked vol	1442	398			505	
tC, single (s)	6.4	6.2			4.1	
tC, 2 stage (s)						
tF (s)	3.5	3.3			2.2	
p0 queue free %	0	66			73	
cM capacity (veh/h)	107	656			1070	

Direction, Lane #	WB 1	WB 2	NB 1	SB 1	SB 2
Volume Total	190	225	505	290	465
Volume Left	190	0	0	290	0
Volume Right	0	225	215	0	0
cSH	107	656	1700	1070	1700
Volume to Capacity	1.77	0.34	0.30	0.27	0.27
Queue Length 95th (ft)	377	38	0	28	0
Control Delay (s)	450.1	13.3	0.0	9.6	0.0
Lane LOS	F	B		A	
Approach Delay (s)	213.3		0.0	3.7	
Approach LOS	F				

Intersection Summary			
Average Delay	54.5		
Intersection Capacity Utilization	66.2%	ICU Level of Service	C
Analysis Period (min)	15		

Movement	EBL	EBT	EBR	WBL	WBT	WBR	NBL	NBT	NBR	SBL	SBT	SBR
Lane Configurations												
Volume (vph)	125	375	200	115	350	165	100	590	55	315	1045	90
Ideal Flow (vphpl)	1900	1900	1900	1900	1900	1900	1900	1900	1900	1900	1900	1900
Total Lost time (s)	4.0	4.0		4.0	4.0		4.0	4.0		4.0	4.0	
Lane Util. Factor	1.00	1.00		1.00	1.00		1.00	0.95		1.00	0.95	
Frt	1.00	0.95		1.00	0.95		1.00	0.99		1.00	0.99	
Flt Protected	0.95	1.00		0.95	1.00		0.95	1.00		0.95	1.00	
Satd. Flow (prot)	1805	1801		1805	1809		1805	3564		1805	3567	
Flt Permitted	0.95	1.00		0.95	1.00		0.13	1.00		0.19	1.00	
Satd. Flow (perm)	1805	1801		1805	1809		242	3564		357	3567	
Peak-hour factor, PHF	1.00	1.00	1.00	1.00	1.00	1.00	1.00	1.00	1.00	1.00	1.00	1.00
Adj. Flow (vph)	125	375	200	115	350	165	100	590	55	315	1045	90
RTOR Reduction (vph)	0	16	0	0	14	0	0	6	0	0	5	0
Lane Group Flow (vph)	125	559	0	115	501	0	100	639	0	315	1130	0
Heavy Vehicles (%)	0%	0%	0%	0%	0%	0%	0%	0%	0%	0%	0%	0%
Turn Type	Prot			Prot			pm+pt			pm+pt		
Protected Phases	3	8		7	4		1	6		5	2	
Permitted Phases							6			2		
Actuated Green, G (s)	8.9	38.6		8.6	38.3		35.5	30.4		50.7	40.6	
Effective Green, g (s)	9.9	40.0		9.6	39.7		37.5	31.9		51.7	42.1	
Actuated g/C Ratio	0.09	0.35		0.08	0.35		0.33	0.28		0.45	0.37	
Clearance Time (s)	5.0	5.4		5.0	5.4		5.0	5.5		5.0	5.5	
Vehicle Extension (s)	0.2	5.0		0.2	8.0		0.2	5.0		0.2	5.0	
Lane Grp Cap (vph)	157	633		152	631		164	999		370	1320	
v/s Ratio Prot	c0.07	c0.31		0.06	0.28		0.03	0.18		c0.12	c0.32	
v/s Ratio Perm							0.17			0.26		
v/c Ratio	0.80	0.88		0.76	0.79		0.61	0.64		0.85	0.86	
Uniform Delay, d1	51.0	34.7		51.0	33.4		29.4	35.9		23.2	33.1	
Progression Factor	1.00	1.00		1.00	1.00		1.00	1.00		1.00	1.00	
Incremental Delay, d2	22.3	14.7		17.2	9.1		4.4	1.9		16.3	6.2	
Delay (s)	73.3	49.4		68.1	42.5		33.7	37.8		39.6	39.3	
Level of Service	E	D		E	D		C	D		D	D	
Approach Delay (s)		53.6			47.2			37.3			39.3	
Approach LOS		D			D			D			D	

Intersection Summary			
HCM Average Control Delay	43.1	HCM Level of Service	D
HCM Volume to Capacity ratio	0.82		
Actuated Cycle Length (s)	113.8	Sum of lost time (s)	8.0
Intersection Capacity Utilization	88.9%	ICU Level of Service	E
Analysis Period (min)	15		

c Critical Lane Group

Movement	EBL	EBT	EBR	WBL	WBT	WBR	NBL	NBT	NBR	SBL	SBT	SBR
Lane Configurations												
Volume (vph)	75	65	260	180	65	50	85	465	195	145	1180	45
Ideal Flow (vphpl)	1900	1900	1900	1900	1900	1900	1900	1900	1900	1900	1900	1900
Total Lost time (s)	4.0	4.0		4.0	4.0		4.0	4.0		4.0	4.0	
Lane Util. Factor	1.00	1.00		1.00	1.00		1.00	0.95		1.00	0.95	
Frt	1.00	0.88		1.00	0.93		1.00	0.96		1.00	0.99	
Flt Protected	0.95	1.00		0.95	1.00		0.95	1.00		0.95	1.00	
Satd. Flow (prot)	1770	1639		1770	1741		1770	3382		1770	3520	
Flt Permitted	1.00	1.00		1.00	1.00		0.08	1.00		0.40	1.00	
Satd. Flow (perm)	1863	1639		1863	1741		155	3382		745	3520	
Peak-hour factor, PHF	1.00	1.00	1.00	1.00	1.00	1.00	1.00	1.00	1.00	1.00	1.00	1.00
Adj. Flow (vph)	75	65	260	180	65	50	85	465	195	145	1180	45
RTOR Reduction (vph)	0	135	0	0	29	0	0	33	0	0	2	0
Lane Group Flow (vph)	75	190	0	180	86	0	85	627	0	145	1223	0
Turn Type	pm+pt			pm+pt			pm+pt			pm+pt		
Protected Phases	3	8		7	4		1	6		5	2	
Permitted Phases	8			4			6			2		
Actuated Green, G (s)	19.0	19.0		14.2	14.2		55.9	55.9		64.4	64.4	
Effective Green, g (s)	19.0	19.0		14.2	14.2		55.9	55.9		64.4	64.4	
Actuated g/C Ratio	0.16	0.16		0.12	0.12		0.47	0.47		0.54	0.54	
Clearance Time (s)	4.0	4.0		4.0	4.0		4.0	4.0		4.0	4.0	
Vehicle Extension (s)	2.5	2.5		2.5	2.5		2.5	2.5		2.5	2.5	
Lane Grp Cap (vph)	295	260		220	206		169	1575		534	1889	
v/s Ratio Prot	0.04	c0.12		0.09	0.05		c0.03	0.19		0.04	c0.35	
v/s Ratio Perm	0.00			c0.01			0.20			0.11		
v/c Ratio	0.25	0.73		0.82	0.42		0.50	0.40		0.27	0.65	
Uniform Delay, d1	42.7	48.1		52.0	49.1		23.0	21.0		16.1	19.7	
Progression Factor	1.00	1.00		1.00	1.00		0.71	0.23		1.00	1.00	
Incremental Delay, d2	0.3	9.6		20.0	1.0		1.5	0.7		0.2	1.7	
Delay (s)	43.1	57.7		72.1	50.1		17.8	5.5		16.3	21.5	
Level of Service	D	E		E	D		B	A		B	C	
Approach Delay (s)		54.9			63.5			6.9			20.9	
Approach LOS		D			E			A			C	

Intersection Summary			
HCM Average Control Delay	26.5	HCM Level of Service	C
HCM Volume to Capacity ratio	0.66		
Actuated Cycle Length (s)	120.0	Sum of lost time (s)	12.0
Intersection Capacity Utilization	81.5%	ICU Level of Service	D
Analysis Period (min)	15		
c Critical Lane Group			

Movement	EBL	EBT	EBR	WBL	WBT	WBR	NBL	NBT	NBR	SBL	SBT	SBR
Lane Configurations												
Volume (vph)	20	1410	360	260	1630	90	150	230	165	90	440	90
Ideal Flow (vphpl)	1900	1900	1900	1900	1900	1900	1900	1900	1900	1900	1900	1900
Total Lost time (s)	4.0	4.0	3.3	4.0	4.0	4.0	3.5	4.0		3.5	4.0	
Lane Util. Factor	1.00	0.95	1.00	1.00	0.95	1.00	1.00	1.00		1.00	1.00	
Frt	1.00	1.00	0.85	1.00	1.00	0.85	1.00	0.94		1.00	0.97	
Flt Protected	0.95	1.00	1.00	0.95	1.00	1.00	0.95	1.00		0.95	1.00	
Satd. Flow (prot)	1752	3539	1583	1752	3539	1568	1787	1763		1752	1833	
Flt Permitted	0.95	1.00	1.00	0.95	1.00	1.00	0.14	1.00		0.14	1.00	
Satd. Flow (perm)	1752	3539	1583	1752	3539	1568	273	1763		260	1833	
Peak-hour factor, PHF	1.00	1.00	1.00	1.00	1.00	1.00	1.00	1.00	1.00	1.00	1.00	1.00
Adj. Flow (vph)	20	1410	360	260	1630	90	150	230	165	90	440	90
RTOR Reduction (vph)	0	0	53	0	0	15	0	22	0	0	6	0
Lane Group Flow (vph)	20	1410	307	260	1630	75	150	373	0	90	524	0
Heavy Vehicles (%)	3%	2%	2%	3%	2%	3%	1%	1%	1%	3%	0%	6%
Turn Type	Prot		pm+ov	Prot		Perm	pm+pt			pm+pt		
Protected Phases	5	2	3	1	6		3	8		7	4	
Permitted Phases			2			6	8			4		
Actuated Green, G (s)	2.0	48.5	54.5	20.4	66.9	66.9	33.1	27.1		34.7	27.9	
Effective Green, g (s)	2.0	49.2	55.9	20.4	67.6	67.6	34.1	27.6		35.7	28.4	
Actuated g/C Ratio	0.02	0.41	0.47	0.17	0.56	0.56	0.28	0.23		0.30	0.24	
Clearance Time (s)	4.0	4.7	4.0	4.0	4.7	4.7	4.0	4.5		4.0	4.5	
Vehicle Extension (s)	2.3	4.5	2.5	2.3	4.5	4.5	2.5	2.5		2.5	2.5	
Lane Grp Cap (vph)	29	1451	737	298	1994	883	160	405		168	434	
v/s Ratio Prot	0.01	c0.40	0.02	0.15	c0.46		c0.05	0.21		0.03	c0.29	
v/s Ratio Perm			0.17			0.05	0.22			0.13		
v/c Ratio	0.69	0.97	0.42	0.87	0.82	0.09	0.94	0.92		0.54	1.21	
Uniform Delay, d1	58.7	34.7	21.2	48.5	21.2	12.0	39.3	45.1		33.5	45.8	
Progression Factor	1.28	0.70	0.68	0.80	0.46	0.25	1.00	1.00		1.00	1.00	
Incremental Delay, d2	33.5	13.9	0.2	17.4	2.7	0.1	52.4	26.2		2.5	113.1	
Delay (s)	108.9	38.3	14.6	56.0	12.6	3.1	91.6	71.4		36.1	158.9	
Level of Service	F	D	B	E	B	A	F	E		D	F	
Approach Delay (s)		34.3			17.9			77.0			141.1	
Approach LOS		C			B			E			F	

Intersection Summary			
HCM Average Control Delay	45.8	HCM Level of Service	D
HCM Volume to Capacity ratio	0.95		
Actuated Cycle Length (s)	120.0	Sum of lost time (s)	7.5
Intersection Capacity Utilization	103.6%	ICU Level of Service	G
Analysis Period (min)	15		

c Critical Lane Group

Movement	EBL	EBT	EBR	WBL	WBT	WBR	NBL	NBT	NBR	SBL	SBT	SBR
Lane Configurations												
Volume (vph)	150	1330	230	200	1545	185	205	190	120	285	335	120
Ideal Flow (vphpl)	1900	1900	1900	1900	1900	1900	1900	1900	1900	1900	1900	1900
Total Lost time (s)	4.0	4.0	4.0	4.0	4.0	4.0	4.0	4.0	4.0	4.0	4.0	
Lane Util. Factor	1.00	0.95	1.00	1.00	0.95	1.00	1.00	1.00	1.00	1.00	1.00	
Frt	1.00	1.00	0.85	1.00	1.00	0.85	1.00	1.00	0.85	1.00	0.96	
Flt Protected	0.95	1.00	1.00	0.95	1.00	1.00	0.95	1.00	1.00	0.95	1.00	
Satd. Flow (prot)	1805	3610	1615	1805	3312	1615	1805	1900	1615	1805	1825	
Flt Permitted	0.95	1.00	1.00	0.95	1.00	1.00	0.95	1.00	1.00	0.95	1.00	
Satd. Flow (perm)	1805	3610	1615	1805	3312	1615	1805	1900	1615	1805	1825	
Peak-hour factor, PHF	1.00	1.00	1.00	1.00	1.00	1.00	1.00	1.00	1.00	1.00	1.00	1.00
Adj. Flow (vph)	150	1330	230	200	1545	185	205	190	120	285	335	120
RTOR Reduction (vph)	0	0	90	0	0	34	0	0	104	0	11	0
Lane Group Flow (vph)	150	1330	140	200	1545	151	205	190	16	285	444	0
Heavy Vehicles (%)	0%	0%	0%	0%	9%	0%	0%	0%	0%	0%	0%	0%
Turn Type	Prot		Perm	Prot		Perm	Prot		Perm	Prot		
Protected Phases	5	2		1	6		7	4		3	8	
Permitted Phases			2			6			4			
Actuated Green, G (s)	10.0	47.9	47.9	14.7	52.6	52.6	13.0	15.3	15.3	24.2	26.5	
Effective Green, g (s)	10.0	49.3	49.3	14.7	54.0	54.0	13.0	15.8	15.8	24.2	27.0	
Actuated g/C Ratio	0.08	0.41	0.41	0.12	0.45	0.45	0.11	0.13	0.13	0.20	0.22	
Clearance Time (s)	4.0	5.4	5.4	4.0	5.4	5.4	4.0	4.5	4.5	4.0	4.5	
Vehicle Extension (s)	2.3	4.5	4.5	2.3	4.5	4.5	2.3	2.3	2.3	2.3	2.3	
Lane Grp Cap (vph)	150	1483	663	221	1490	727	196	250	213	364	411	
v/s Ratio Prot	0.08	c0.37		0.11	c0.47		c0.11	0.10		0.16	c0.24	
v/s Ratio Perm			0.09			0.09			0.01			
v/c Ratio	1.00	0.90	0.21	0.90	1.04	0.21	1.05	0.76	0.07	0.78	1.08	
Uniform Delay, d1	55.0	33.0	22.8	52.0	33.0	20.0	53.5	50.3	45.7	45.4	46.5	
Progression Factor	1.15	0.33	0.18	1.00	1.00	1.00	1.00	1.00	1.00	1.00	1.00	
Incremental Delay, d2	64.3	7.0	0.6	35.3	33.5	0.6	76.9	11.9	0.1	10.0	67.7	
Delay (s)	127.5	17.7	4.6	87.3	66.5	20.7	130.4	62.2	45.8	55.4	114.2	
Level of Service	F	B	A	F	E	C	F	E	D	E	F	
Approach Delay (s)		25.6			64.2			85.5			91.6	
Approach LOS		C			E			F			F	

Intersection Summary			
HCM Average Control Delay	57.1	HCM Level of Service	E
HCM Volume to Capacity ratio	1.05		
Actuated Cycle Length (s)	120.0	Sum of lost time (s)	16.0
Intersection Capacity Utilization	100.6%	ICU Level of Service	G
Analysis Period (min)	15		

c Critical Lane Group

Movement	EBL	EBT	EBR	WBL	WBT	WBR	NBL	NBT	NBR	SBL	SBT	SBR
Lane Configurations												
Volume (vph)	190	1200	370	400	1450	140	320	610	150	210	800	175
Ideal Flow (vphpl)	1900	1900	1900	1900	1900	1900	1900	1900	1900	1900	1900	1900
Total Lost time (s)	4.0	4.0	3.0	4.0	4.0		4.0	4.0	4.0	4.0	4.0	3.0
Lane Util. Factor	0.97	0.95	1.00	0.97	0.95		0.97	0.95	1.00	0.97	0.95	1.00
Frt	1.00	1.00	0.85	1.00	0.99		1.00	1.00	0.85	1.00	1.00	0.85
Flt Protected	0.95	1.00	1.00	0.95	1.00		0.95	1.00	1.00	0.95	1.00	1.00
Satd. Flow (prot)	3467	3610	1615	3502	3530		3502	3610	1615	3502	3574	1615
Flt Permitted	0.95	1.00	1.00	0.95	1.00		0.95	1.00	1.00	0.95	1.00	1.00
Satd. Flow (perm)	3467	3610	1615	3502	3530		3502	3610	1615	3502	3574	1615
Peak-hour factor, PHF	1.00	1.00	1.00	1.00	1.00	1.00	1.00	1.00	1.00	1.00	1.00	1.00
Adj. Flow (vph)	190	1200	370	400	1450	140	320	610	150	210	800	175
RTOR Reduction (vph)	0	0	7	0	6	0	0	0	18	0	0	11
Lane Group Flow (vph)	190	1200	363	400	1584	0	320	610	132	210	800	164
Heavy Vehicles (%)	1%	0%	0%	0%	1%	0%	0%	0%	0%	0%	1%	0%
Turn Type	Prot		pm+ov	Prot			Prot		pm+ov	Prot		pm+ov
Protected Phases	5	2	3	1	6		3	8	1	7	4	5
Permitted Phases			2						8			4
Actuated Green, G (s)	9.1	52.2	65.8	17.6	60.7		13.6	31.7	49.3	11.9	30.0	39.1
Effective Green, g (s)	8.6	52.7	66.8	17.1	61.2		13.1	32.2	48.3	11.4	30.5	40.1
Actuated g/C Ratio	0.07	0.41	0.52	0.13	0.47		0.10	0.25	0.37	0.09	0.24	0.31
Clearance Time (s)	3.5	4.5	3.5	3.5	4.5		3.5	4.5	3.5	3.5	4.5	3.5
Vehicle Extension (s)	2.3	4.3	2.3	2.3	4.3		2.3	2.3	2.3	2.3	2.3	2.3
Lane Grp Cap (vph)	230	1470	834	463	1670		355	898	603	309	842	500
v/s Ratio Prot	0.05	0.33	0.05	c0.11	c0.45		c0.09	0.17	0.03	0.06	c0.22	0.02
v/s Ratio Perm			0.18						0.05			0.08
v/c Ratio	0.83	0.82	0.44	0.86	0.95		0.90	0.68	0.22	0.68	0.95	0.33
Uniform Delay, d1	59.7	34.1	19.5	55.0	32.6		57.5	43.9	27.7	57.2	48.7	34.3
Progression Factor	1.00	1.00	1.00	1.00	1.00		1.00	1.00	1.00	1.00	1.00	1.00
Incremental Delay, d2	20.3	5.1	0.2	15.1	12.8		24.8	1.8	0.1	5.0	19.8	0.2
Delay (s)	80.0	39.2	19.7	70.1	45.4		82.3	45.7	27.8	62.3	68.5	34.5
Level of Service	E	D	B	E	D		F	D	C	E	E	C
Approach Delay (s)		39.5			50.4			54.0			62.4	
Approach LOS		D			D			D			E	

Intersection Summary			
HCM Average Control Delay	50.2	HCM Level of Service	D
HCM Volume to Capacity ratio	0.92		
Actuated Cycle Length (s)	129.4	Sum of lost time (s)	12.0
Intersection Capacity Utilization	94.5%	ICU Level of Service	F
Analysis Period (min)	15		

c Critical Lane Group

Movement	WBL	WBR	NBT	NBR	SBL	SBT
Lane Configurations						
Volume (vph)	250	55	365	220	180	630
Ideal Flow (vphpl)	1900	1900	1900	1900	1900	1900
Total Lost time (s)	4.0	4.0	4.0	4.0	4.0	4.0
Lane Util. Factor	1.00	1.00	1.00	1.00	1.00	1.00
Frt	1.00	0.85	1.00	0.85	1.00	1.00
Flt Protected	0.95	1.00	1.00	1.00	0.95	1.00
Satd. Flow (prot)	1805	1615	1900	1615	1805	1900
Flt Permitted	0.95	1.00	1.00	1.00	0.95	1.00
Satd. Flow (perm)	1805	1615	1900	1615	1805	1900
Peak-hour factor, PHF	1.00	1.00	1.00	1.00	1.00	1.00
Adj. Flow (vph)	250	55	365	220	180	630
RTOR Reduction (vph)	0	40	0	154	0	0
Lane Group Flow (vph)	250	15	365	66	180	630
Heavy Vehicles (%)	0%	0%	0%	0%	0%	0%
Turn Type		Prot		Perm	Prot	
Protected Phases	4	4	6		5	2
Permitted Phases				6		
Actuated Green, G (s)	13.2	13.2	14.3	14.3	11.0	30.3
Effective Green, g (s)	14.2	14.2	14.8	14.8	12.0	30.8
Actuated g/C Ratio	0.27	0.27	0.28	0.28	0.23	0.58
Clearance Time (s)	5.0	5.0	4.5	4.5	5.0	4.5
Vehicle Extension (s)	3.0	3.0	1.0	1.0	3.0	1.0
Lane Grp Cap (vph)	484	433	531	451	409	1104
v/s Ratio Prot	c0.14	0.01	c0.19		0.10	c0.33
v/s Ratio Perm				0.04		
v/c Ratio	0.52	0.03	0.69	0.15	0.44	0.57
Uniform Delay, d1	16.5	14.3	17.0	14.4	17.6	7.0
Progression Factor	1.00	1.00	1.00	1.00	1.00	1.00
Incremental Delay, d2	0.9	0.0	2.9	0.1	0.8	0.4
Delay (s)	17.4	14.4	20.0	14.4	18.4	7.4
Level of Service	B	B	B	B	B	A
Approach Delay (s)	16.9		17.9			9.8
Approach LOS	B		B			A

Intersection Summary			
HCM Average Control Delay	13.9	HCM Level of Service	B
HCM Volume to Capacity ratio	0.62		
Actuated Cycle Length (s)	53.0	Sum of lost time (s)	12.0
Intersection Capacity Utilization	53.7%	ICU Level of Service	A
Analysis Period (min)	15		

c Critical Lane Group

Movement	EBL	EBT	EBR	WBL	WBT	WBR	NBL	NBT	NBR	SBL	SBT	SBR
Lane Configurations												
Volume (veh/h)	70	195	65	45	30	210	10	200	50	205	475	120
Sign Control		Stop			Stop			Free			Free	
Grade		0%			0%			0%			0%	
Peak Hour Factor	1.00	1.00	1.00	1.00	1.00	1.00	1.00	1.00	1.00	1.00	1.00	1.00
Hourly flow rate (vph)	70	195	65	45	30	210	10	200	50	205	475	120
Pedestrians												
Lane Width (ft)												
Walking Speed (ft/s)												
Percent Blockage												
Right turn flare (veh)												
Median type								None			None	
Median storage veh)												
Upstream signal (ft)											679	
pX, platoon unblocked												
vC, conflicting volume	1390	1215	535	1292	1250	225	595			250		
vC1, stage 1 conf vol												
vC2, stage 2 conf vol												
vCu, unblocked vol	1390	1215	535	1292	1250	225	595			250		
tC, single (s)	7.1	6.5	6.2	7.1	6.5	6.3	4.3			4.1		
tC, 2 stage (s)												
tF (s)	3.5	4.0	3.3	3.5	4.0	3.4	2.4			2.2		
p0 queue free %	0	0	88	0	79	74	99			84		
cM capacity (veh/h)	64	151	547	0	143	792	878			1310		

Direction, Lane #	EB 1	WB 1	NB 1	NB 2	SB 1	SB 2
Volume Total	330	285	10	250	205	595
Volume Left	70	45	10	0	205	0
Volume Right	65	210	0	50	0	120
cSH	132	0	878	1700	1310	1700
Volume to Capacity	2.50	Err	0.01	0.15	0.16	0.35
Queue Length 95th (ft)	726	Err	1	0	14	0
Control Delay (s)	750.6	Err	9.1	0.0	8.3	0.0
Lane LOS	F	F	A		A	
Approach Delay (s)	750.6	Err	0.4		2.1	
Approach LOS	F	F				

Intersection Summary			
Average Delay	Err		
Intersection Capacity Utilization	72.6%	ICU Level of Service	C
Analysis Period (min)	15		

Movement	EBL	EBT	EBR	WBL	WBT	WBR	NBL	NBT	NBR	SBL	SBT	SBR
Lane Configurations												
Volume (veh/h)	160	105	175	115	250	35	100	465	65	110	800	170
Sign Control		Stop			Stop			Free			Free	
Grade		0%			0%			0%			0%	
Peak Hour Factor	1.00	1.00	1.00	1.00	1.00	1.00	1.00	1.00	1.00	1.00	1.00	1.00
Hourly flow rate (vph)	160	105	175	115	250	35	100	465	65	110	800	170
Pedestrians												
Lane Width (ft)												
Walking Speed (ft/s)												
Percent Blockage												
Right turn flare (veh)												
Median type								None			None	
Median storage veh)												
Upstream signal (ft)												
pX, platoon unblocked												
vC, conflicting volume	1930	1835	885	1945	1888	498	970			530		
vC1, stage 1 conf vol												
vC2, stage 2 conf vol												
vCu, unblocked vol	1930	1835	885	1945	1888	498	970			530		
tC, single (s)	7.1	6.5	6.2	7.1	6.5	6.2	4.1			4.1		
tC, 2 stage (s)												
tF (s)	3.5	4.0	3.3	3.5	4.0	3.3	2.2			2.2		
p0 queue free %	0	0	49	0	0	94	86			89		
cM capacity (veh/h)	0	59	345	0	54	575	715			1042		

Direction, Lane #	EB 1	EB 2	WB 1	NB 1	NB 2	SB 1	SB 2
Volume Total	160	280	400	100	530	110	970
Volume Left	160	0	115	100	0	110	0
Volume Right	0	175	35	0	65	0	170
cSH	0	122	0	715	1700	1042	1700
Volume to Capacity	Err	2.29	Err	0.14	0.31	0.11	0.57
Queue Length 95th (ft)	Err	603	Err	12	0	9	0
Control Delay (s)	Err	665.3	Err	10.9	0.0	8.9	0.0
Lane LOS	F	F	F	B		A	
Approach Delay (s)	Err		Err	1.7		0.9	
Approach LOS	F		F				

Intersection Summary			
Average Delay	Err		
Intersection Capacity Utilization	110.9%	ICU Level of Service	H
Analysis Period (min)	15		

Movement	EBL	EBT	EBR	WBL	WBT	WBR	NBL	NBT	NBR	SBL	SBT	SBR
Lane Configurations												
Volume (veh/h)	75	200	150	70	135	55	70	465	45	150	735	165
Sign Control		Stop			Stop			Free			Free	
Grade		0%			0%			0%			0%	
Peak Hour Factor	1.00	1.00	1.00	1.00	1.00	1.00	1.00	1.00	1.00	1.00	1.00	1.00
Hourly flow rate (vph)	75	200	150	70	135	55	70	465	45	150	735	165
Pedestrians												
Lane Width (ft)												
Walking Speed (ft/s)												
Percent Blockage												
Right turn flare (veh)												
Median type								None			None	
Median storage veh)												
Upstream signal (ft)												
pX, platoon unblocked												
vC, conflicting volume	1845	1768	818	1912	1828	488	900			510		
vC1, stage 1 conf vol												
vC2, stage 2 conf vol												
vCu, unblocked vol	1845	1768	818	1912	1828	488	900			510		
tC, single (s)	7.1	6.5	6.2	7.1	6.5	6.2	4.1			4.1		
tC, 2 stage (s)												
tF (s)	3.5	4.0	3.3	3.5	4.0	3.3	2.2			2.2		
p0 queue free %	0	0	60	0	0	91	91			86		
cM capacity (veh/h)	0	66	378	0	60	582	759			1060		

Direction, Lane #	EB 1	EB 2	WB 1	WB 2	NB 1	NB 2	SB 1	SB 2
Volume Total	75	350	70	190	70	510	150	900
Volume Left	75	0	70	0	70	0	150	0
Volume Right	0	150	0	55	0	45	0	165
cSH	0	101	0	81	759	1700	1060	1700
Volume to Capacity	Err	3.45	Err	2.34	0.09	0.30	0.14	0.53
Queue Length 95th (ft)	Err	Err	Err	441	8	0	12	0
Control Delay (s)	Err	Err	Err	721.4	10.2	0.0	9.0	0.0
Lane LOS	F	F	F	F	B		A	
Approach Delay (s)	Err		Err		1.2		1.3	
Approach LOS	F		F					

Intersection Summary			
Average Delay	Err		
Intersection Capacity Utilization	90.7%	ICU Level of Service	E
Analysis Period (min)	15		

Movement	EBL	EBT	EBR	WBL	WBT	WBR	NBL	NBT	NBR	SBL	SBT	SBR
Lane Configurations												
Volume (veh/h)	85	125	70	10	140	20	30	405	30	70	685	180
Sign Control		Stop			Stop			Free			Free	
Grade		0%			0%			0%			0%	
Peak Hour Factor	1.00	1.00	1.00	1.00	1.00	1.00	1.00	1.00	1.00	1.00	1.00	1.00
Hourly flow rate (vph)	85	125	70	10	140	20	30	405	30	70	685	180
Pedestrians												
Lane Width (ft)												
Walking Speed (ft/s)												
Percent Blockage												
Right turn flare (veh)												
Median type								TWLTL			TWLTL	
Median storage veh)								2			2	
Upstream signal (ft)												
pX, platoon unblocked												
vC, conflicting volume	1470	1410	775	1438	1485	420	865			435		
vC1, stage 1 conf vol	915	915		480	480							
vC2, stage 2 conf vol	555	495		958	1005							
vCu, unblocked vol	1470	1410	775	1438	1485	420	865			435		
tC, single (s)	7.1	6.5	6.2	7.1	6.5	6.2	4.1			4.1		
tC, 2 stage (s)	6.1	5.5		6.1	5.5							
tF (s)	3.5	4.0	3.3	3.5	4.0	3.3	2.2			2.2		
p0 queue free %	59	56	82	91	44	97	96			94		
cM capacity (veh/h)	209	283	398	115	249	635	778			1130		

Direction, Lane #	EB 1	WB 1	NB 1	NB 2	SB 1	SB 2
Volume Total	280	170	30	435	70	865
Volume Left	85	10	30	0	70	0
Volume Right	70	20	0	30	0	180
cSH	274	250	778	1700	1130	1700
Volume to Capacity	1.02	0.68	0.04	0.26	0.06	0.51
Queue Length 95th (ft)	266	111	3	0	5	0
Control Delay (s)	101.5	45.4	9.8	0.0	8.4	0.0
Lane LOS	F	E	A		A	
Approach Delay (s)	101.5	45.4	0.6		0.6	
Approach LOS	F	E				

Intersection Summary			
Average Delay	20.0		
Intersection Capacity Utilization	90.0%	ICU Level of Service	E
Analysis Period (min)	15		

Movement	WBL	WBR	NBT	NBR	SBL	SBT
Lane Configurations						
Volume (veh/h)	95	160	385	140	270	580
Sign Control	Stop		Free			Free
Grade	0%		0%			0%
Peak Hour Factor	1.00	1.00	1.00	1.00	1.00	1.00
Hourly flow rate (vph)	95	160	385	140	270	580
Pedestrians						
Lane Width (ft)						
Walking Speed (ft/s)						
Percent Blockage						
Right turn flare (veh)						
Median type			None			None
Median storage veh)						
Upstream signal (ft)						
pX, platoon unblocked						
vC, conflicting volume	1575	455			525	
vC1, stage 1 conf vol						
vC2, stage 2 conf vol						
vCu, unblocked vol	1575	455			525	
tC, single (s)	6.4	6.2			4.1	
tC, 2 stage (s)						
tF (s)	3.5	3.3			2.2	
p0 queue free %	0	74			74	
cM capacity (veh/h)	90	607			1047	

Direction, Lane #	WB 1	NB 1	SB 1
Volume Total	255	525	850
Volume Left	95	0	270
Volume Right	160	140	0
cSH	194	1700	1047
Volume to Capacity	1.32	0.31	0.26
Queue Length 95th (ft)	358	0	26
Control Delay (s)	221.7	0.0	5.6
Lane LOS	F		A
Approach Delay (s)	221.7	0.0	5.6
Approach LOS	F		

Intersection Summary			
Average Delay	37.6		
Intersection Capacity Utilization	99.3%	ICU Level of Service	F
Analysis Period (min)	15		

Movement	EBL	EBT	WBT	WBR	SBL	SBR
Lane Configurations						
Volume (veh/h)	35	375	190	80	85	25
Sign Control		Free	Free		Stop	
Grade		0%	0%		0%	
Peak Hour Factor	1.00	1.00	1.00	1.00	1.00	1.00
Hourly flow rate (vph)	35	375	190	80	85	25
Pedestrians						
Lane Width (ft)						
Walking Speed (ft/s)						
Percent Blockage						
Right turn flare (veh)						
Median type		None	None			
Median storage veh)						
Upstream signal (ft)						
pX, platoon unblocked						
vC, conflicting volume	270				675	230
vC1, stage 1 conf vol						
vC2, stage 2 conf vol						
vCu, unblocked vol	270				675	230
tC, single (s)	4.1				6.4	6.2
tC, 2 stage (s)						
tF (s)	2.2				3.5	3.3
p0 queue free %	97				79	97
cM capacity (veh/h)	1299				410	812

Direction, Lane #	EB 1	WB 1	SB 1
Volume Total	410	270	110
Volume Left	35	0	85
Volume Right	0	80	25
cSH	1299	1700	462
Volume to Capacity	0.03	0.16	0.24
Queue Length 95th (ft)	2	0	23
Control Delay (s)	0.9	0.0	15.2
Lane LOS	A		C
Approach Delay (s)	0.9	0.0	15.2
Approach LOS			C

Intersection Summary			
Average Delay	2.6		
Intersection Capacity Utilization	54.0%	ICU Level of Service	A
Analysis Period (min)	15		

Movement	EBL	EBT	EBR	WBL	WBT	WBR	NBL	NBT	NBR	SBL	SBT	SBR
Lane Configurations												
Volume (veh/h)	65	25	615	55	30	25	295	640	10	20	805	25
Sign Control		Stop			Stop			Free			Free	
Grade		0%			0%			0%			0%	
Peak Hour Factor	1.00	1.00	1.00	1.00	1.00	1.00	1.00	1.00	1.00	1.00	1.00	1.00
Hourly flow rate (vph)	65	25	615	55	30	25	295	640	10	20	805	25
Pedestrians												
Lane Width (ft)												
Walking Speed (ft/s)												
Percent Blockage												
Right turn flare (veh)			6									
Median type								None			TWLTL	
Median storage veh)											2	
Upstream signal (ft)								1262				
pX, platoon unblocked												
vC, conflicting volume	2128	2098	818	2400	2105	645	830			650		
vC1, stage 1 conf vol	858	858		1235	1235							
vC2, stage 2 conf vol	1270	1240		1165	870							
vCu, unblocked vol	2128	2098	818	2400	2105	645	830			650		
tC, single (s)	7.1	6.5	6.2	7.1	6.5	6.2	4.1			4.1		
tC, 2 stage (s)	6.1	5.5		6.1	5.5							
tF (s)	3.5	4.0	3.3	3.5	4.0	3.3	2.2			2.2		
p0 queue free %	16	80	0	0	53	95	63			98		
cM capacity (veh/h)	77	127	378	0	64	474	806			941		

Direction, Lane #	EB 1	WB 1	NB 1	NB 2	SB 1	SB 2
Volume Total	705	110	295	650	20	830
Volume Left	65	55	295	0	20	0
Volume Right	615	25	0	10	0	25
cSH	377	0	806	1700	941	1700
Volume to Capacity	1.87	Err	0.37	0.38	0.02	0.49
Queue Length 95th (ft)	1167	Err	42	0	2	0
Control Delay (s)	426.3	Err	12.0	0.0	8.9	0.0
Lane LOS	F	F	B		A	
Approach Delay (s)	426.3	Err	3.8		0.2	
Approach LOS	F	F				

Intersection Summary			
Average Delay	Err		
Intersection Capacity Utilization	98.1%	ICU Level of Service	F
Analysis Period (min)	15		

Movement	EBL	EBT	EBR	WBL	WBT	WBR	NBL	NBT	NBR	SBL	SBT	SBR
Lane Configurations												
Volume (vph)	235	445	20	50	515	465	15	245	75	585	580	310
Ideal Flow (vphpl)	1900	1900	1900	1900	1900	1900	1900	1900	1900	1900	1900	1900
Total Lost time (s)	4.0	4.0		4.0	4.0	4.0	4.0	4.0		4.0	4.0	
Lane Util. Factor	1.00	1.00		1.00	1.00	1.00	1.00	1.00		1.00	1.00	
Frt	1.00	0.99		1.00	1.00	0.85	1.00	0.96		1.00	0.95	
Flt Protected	0.95	1.00		0.95	1.00	1.00	0.95	1.00		0.95	1.00	
Satd. Flow (prot)	1805	1888		1805	1900	1615	1805	1833		1805	1801	
Flt Permitted	0.95	1.00		0.95	1.00	1.00	0.95	1.00		0.95	1.00	
Satd. Flow (perm)	1805	1888		1805	1900	1615	1805	1833		1805	1801	
Peak-hour factor, PHF	1.00	1.00	1.00	1.00	1.00	1.00	1.00	1.00	1.00	1.00	1.00	1.00
Adj. Flow (vph)	235	445	20	50	515	465	15	245	75	585	580	310
RTOR Reduction (vph)	0	1	0	0	0	227	0	9	0	0	15	0
Lane Group Flow (vph)	235	464	0	50	515	238	15	311	0	585	875	0
Heavy Vehicles (%)	0%	0%	0%	0%	0%	0%	0%	0%	0%	0%	0%	0%
Turn Type	Prot			Prot		Perm	Prot			Prot		
Protected Phases	5	2		1	6		3	8		7	4	
Permitted Phases						6						
Actuated Green, G (s)	13.0	38.2		4.0	29.2	29.2	2.0	21.6		37.0	56.6	
Effective Green, g (s)	15.0	40.2		6.0	31.2	31.2	4.0	23.6		39.0	58.6	
Actuated g/C Ratio	0.12	0.32		0.05	0.25	0.25	0.03	0.19		0.31	0.47	
Clearance Time (s)	6.0	6.0		6.0	6.0	6.0	6.0	6.0		6.0	6.0	
Vehicle Extension (s)	2.4	2.7		2.7	2.7	2.7	2.6	2.5		2.6	2.5	
Lane Grp Cap (vph)	217	608		87	475	404	58	347		564	846	
v/s Ratio Prot	c0.13	0.25		0.03	c0.27		0.01	0.17		c0.32	c0.49	
v/s Ratio Perm						0.15						
v/c Ratio	1.08	0.76		0.57	1.08	0.59	0.26	0.90		1.04	1.03	
Uniform Delay, d1	54.9	38.0		58.2	46.8	41.2	59.0	49.4		42.9	33.1	
Progression Factor	1.00	1.00		1.00	1.00	1.00	1.00	1.00		1.00	1.00	
Incremental Delay, d2	84.9	5.5		7.9	65.9	2.0	1.9	24.3		47.9	40.2	
Delay (s)	139.8	43.5		66.1	112.7	43.1	60.8	73.7		90.8	73.3	
Level of Service	F	D		E	F	D	E	E		F	E	
Approach Delay (s)		75.8			79.0			73.1			80.2	
Approach LOS		E			E			E			F	

Intersection Summary			
HCM Average Control Delay	78.3	HCM Level of Service	E
HCM Volume to Capacity ratio	1.04		
Actuated Cycle Length (s)	124.8	Sum of lost time (s)	12.0
Intersection Capacity Utilization	107.0%	ICU Level of Service	G
Analysis Period (min)	15		

c Critical Lane Group

Movement	EBL	EBT	EBR	WBL	WBT	WBR	NBL	NBT	NBR	SBL	SBT	SBR
Lane Configurations												
Volume (vph)	145	960	5	5	1125	315	5	5	5	270	5	110
Ideal Flow (vphpl)	1900	1900	1900	1900	1900	1900	1900	1900	1900	1900	1900	1900
Total Lost time (s)	4.0	4.0		4.0	4.0	6.5		4.0			4.0	4.0
Lane Util. Factor	1.00	0.95		1.00	1.00	1.00		1.00			1.00	1.00
Frt	1.00	1.00		1.00	1.00	0.85		0.95			1.00	0.85
Flt Protected	0.95	1.00		0.95	1.00	1.00		0.98			0.95	1.00
Satd. Flow (prot)	1805	3607		1805	1900	1615		1785			1811	1615
Flt Permitted	0.95	1.00		0.95	1.00	1.00		0.92			0.95	1.00
Satd. Flow (perm)	1805	3607		1805	1900	1615		1669			1811	1615
Peak-hour factor, PHF	1.00	1.00	1.00	1.00	1.00	1.00	1.00	1.00	1.00	1.00	1.00	1.00
Adj. Flow (vph)	145	960	5	5	1125	315	5	5	5	270	5	110
RTOR Reduction (vph)	0	0	0	0	0	86	0	5	0	0	0	93
Lane Group Flow (vph)	145	965	0	5	1125	229	0	10	0	0	275	17
Heavy Vehicles (%)	0%	0%	0%	0%	0%	0%	0%	0%	0%	0%	0%	0%
Turn Type	Prot			Prot		Perm	Perm			Split		Perm
Protected Phases	5	2		1	6			8		4	4	
Permitted Phases						6	8					4
Actuated Green, G (s)	8.0	79.2		0.9	71.1	71.1		1.9			17.0	17.0
Effective Green, g (s)	10.0	81.2		1.9	73.1	70.6		2.9			19.0	19.0
Actuated g/C Ratio	0.08	0.67		0.02	0.60	0.58		0.02			0.16	0.16
Clearance Time (s)	6.0	6.0		5.0	6.0	6.0		5.0			6.0	6.0
Vehicle Extension (s)	2.4	2.7		2.4	2.7	2.7		2.5			2.5	2.5
Lane Grp Cap (vph)	149	2421		28	1148	942		40			284	254
v/s Ratio Prot	c0.08	0.27		0.00	c0.59						c0.15	
v/s Ratio Perm						0.14		c0.01				0.01
v/c Ratio	0.97	0.40		0.18	0.98	0.24		0.25			0.97	0.07
Uniform Delay, d1	55.4	8.9		58.8	23.2	12.2		58.0			50.7	43.5
Progression Factor	1.00	1.00		1.00	1.00	1.00		1.00			1.00	1.00
Incremental Delay, d2	65.1	0.1		2.0	21.5	0.1		2.4			44.2	0.1
Delay (s)	120.5	9.0		60.8	44.8	12.3		60.4			94.9	43.5
Level of Service	F	A		E	D	B		E			F	D
Approach Delay (s)		23.6			37.8			60.4			80.2	
Approach LOS		C			D			E			F	

Intersection Summary			
HCM Average Control Delay	38.1	HCM Level of Service	D
HCM Volume to Capacity ratio	0.96		
Actuated Cycle Length (s)	121.0	Sum of lost time (s)	16.0
Intersection Capacity Utilization	99.1%	ICU Level of Service	F
Analysis Period (min)	15		

c Critical Lane Group

Movement	EBL	EBT	EBR	WBL	WBT	WBR	NBL	NBT	NBR	SBL	SBT	SBR
Lane Configurations												
Volume (vph)	210	755	235	160	1135	110	260	365	70	225	695	340
Ideal Flow (vphpl)	1900	1900	1900	1900	1900	1900	1900	1900	1900	1900	1900	1900
Total Lost time (s)	4.0	4.0		4.0	4.0		4.0	5.0		4.0	4.0	
Lane Util. Factor	1.00	0.95		1.00	0.95		1.00	0.95		1.00	0.95	
Frt	1.00	0.96		1.00	0.99		1.00	0.98		1.00	0.95	
Flt Protected	0.95	1.00		0.95	1.00		0.95	1.00		0.95	1.00	
Satd. Flow (prot)	1805	3481		1805	3562		1805	3523		1805	3432	
Flt Permitted	0.95	1.00		0.95	1.00		0.95	1.00		0.95	1.00	
Satd. Flow (perm)	1805	3481		1805	3562		1805	3523		1805	3432	
Peak-hour factor, PHF	1.00	1.00	1.00	1.00	1.00	1.00	1.00	1.00	1.00	1.00	1.00	1.00
Adj. Flow (vph)	210	755	235	160	1135	110	260	365	70	225	695	340
RTOR Reduction (vph)	0	25	0	0	6	0	0	13	0	0	50	0
Lane Group Flow (vph)	210	965	0	160	1239	0	260	422	0	225	985	0
Heavy Vehicles (%)	0%	0%	0%	0%	0%	0%	0%	0%	0%	0%	0%	0%
Turn Type	Prot			Prot			Prot			Prot		
Protected Phases	5	2		1	6		3	8		7	4	
Permitted Phases												
Actuated Green, G (s)	12.0	43.1		11.0	42.1		15.0	28.3		18.2	31.5	
Effective Green, g (s)	13.0	43.6		12.0	42.6		16.0	27.8		19.2	32.0	
Actuated g/C Ratio	0.11	0.36		0.10	0.36		0.13	0.23		0.16	0.27	
Clearance Time (s)	5.0	4.5		5.0	4.5		5.0	4.5		5.0	4.5	
Vehicle Extension (s)	3.0	1.0		3.0	1.0		3.0	1.0		3.0	1.0	
Lane Grp Cap (vph)	196	1269		181	1269		241	819		290	918	
v/s Ratio Prot	c0.12	0.28		0.09	c0.35		c0.14	0.12		0.12	c0.29	
v/s Ratio Perm												
v/c Ratio	1.07	0.76		0.88	0.98		1.08	0.52		0.78	1.07	
Uniform Delay, d1	53.3	33.4		53.1	38.0		51.8	40.0		48.1	43.8	
Progression Factor	1.00	1.00		1.00	1.00		1.00	1.00		1.00	1.00	
Incremental Delay, d2	84.5	2.5		36.2	19.6		80.5	0.2		12.2	51.4	
Delay (s)	137.8	35.9		89.3	57.6		132.3	40.3		60.4	95.2	
Level of Service	F	D		F	E		F	D		E	F	
Approach Delay (s)		53.7			61.2			74.7			89.0	
Approach LOS		D			E			E			F	

Intersection Summary			
HCM Average Control Delay	69.0	HCM Level of Service	E
HCM Volume to Capacity ratio	1.03		
Actuated Cycle Length (s)	119.6	Sum of lost time (s)	16.0
Intersection Capacity Utilization	104.3%	ICU Level of Service	G
Analysis Period (min)	15		

c Critical Lane Group

Movement	EBL	EBT	EBR	WBL	WBT	WBR	NBL	NBT	NBR	SBL	SBT	SBR
Lane Configurations												
Volume (vph)	5	75	200	30	205	225	150	250	10	215	445	90
Ideal Flow (vphpl)	1900	1900	1900	1900	1900	1900	1900	1900	1900	1900	1900	1900
Total Lost time (s)	4.5	4.5		4.5	4.5		4.5	4.5		4.5	4.5	4.5
Lane Util. Factor	1.00	1.00		1.00	1.00		1.00	1.00		1.00	1.00	1.00
Frt	1.00	0.89		1.00	0.92		1.00	0.99		1.00	1.00	0.85
Flt Protected	0.95	1.00		0.95	1.00		0.95	1.00		0.95	1.00	1.00
Satd. Flow (prot)	1770	1660		1770	1717		1770	1852		1770	1863	1583
Flt Permitted	0.27	1.00		0.46	1.00		0.25	1.00		0.42	1.00	1.00
Satd. Flow (perm)	503	1660		862	1717		465	1852		789	1863	1583
Peak-hour factor, PHF	1.00	1.00	1.00	1.00	1.00	1.00	1.00	1.00	1.00	1.00	1.00	1.00
Adj. Flow (vph)	5	75	200	30	205	225	150	250	10	215	445	90
RTOR Reduction (vph)	0	82	0	0	32	0	0	1	0	0	0	63
Lane Group Flow (vph)	5	193	0	30	398	0	150	259	0	215	445	27
Turn Type	pm+pt			pm+pt			pm+pt			pm+pt		Perm
Protected Phases	3	8		7	4		1	6		5	2	
Permitted Phases	8			4			6			2		2
Actuated Green, G (s)	21.9	21.2		22.9	21.7		27.9	18.8		31.9	20.8	20.8
Effective Green, g (s)	20.9	20.7		21.9	21.2		26.9	18.3		30.9	20.3	20.3
Actuated g/C Ratio	0.31	0.30		0.32	0.31		0.39	0.27		0.45	0.30	0.30
Clearance Time (s)	4.0	4.0		4.0	4.0		4.0	4.0		4.0	4.0	4.0
Vehicle Extension (s)	2.5	2.5		2.5	2.5		2.5	2.5		2.5	2.5	2.5
Lane Grp Cap (vph)	158	503		286	533		347	496		509	554	470
v/s Ratio Prot	0.00	0.12		c0.00	c0.23		0.05	0.14		c0.07	c0.24	
v/s Ratio Perm	0.01			0.03			0.12			0.13		0.02
v/c Ratio	0.03	0.38		0.10	0.75		0.43	0.52		0.42	0.80	0.06
Uniform Delay, d1	17.2	18.8		16.6	21.1		14.5	21.3		12.0	22.2	17.2
Progression Factor	1.00	1.00		1.00	1.00		1.00	1.00		1.00	1.00	1.00
Incremental Delay, d2	0.1	0.4		0.1	5.3		0.6	0.8		0.4	8.0	0.0
Delay (s)	17.3	19.1		16.7	26.5		15.1	22.0		12.4	30.2	17.2
Level of Service	B	B		B	C		B	C		B	C	B
Approach Delay (s)		19.1			25.8			19.5			23.5	
Approach LOS		B			C			B			C	

Intersection Summary			
HCM Average Control Delay	22.6	HCM Level of Service	C
HCM Volume to Capacity ratio	0.62		
Actuated Cycle Length (s)	68.3	Sum of lost time (s)	9.0
Intersection Capacity Utilization	67.9%	ICU Level of Service	C
Analysis Period (min)	15		
c Critical Lane Group			

General & Site Information

Analyst:	CMG
Agency/Company:	David Evans and Associates, Inc.
Date:	7/16/2012
Project Name:	SoHi Transportation Plan
Intersection:	Alexand at Brookwood
Analysis Time Period:	PM Peak Hour
Jurisdiction:	City of Hillsboro
Year:	2035 with South Hillsboro

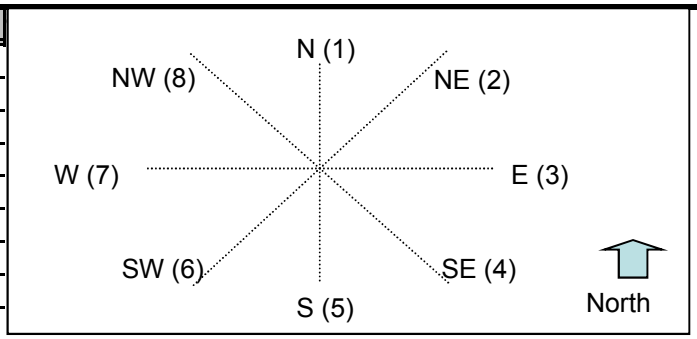

Volumes		Roundabout Approach/Entry Legs							
		N (1)	NE (2)	E (3)	SE (4)	S (5)	SW (6)	W (7)	NW (8)
Input Volumes to Leg #	N (1), vph	250		115		115		55	
	NE (2), vph								
	E (3), vph	220				30		45	
	SE (4), vph								
	S (5), vph	300		10				10	
	SW (6), vph								
	W (7), vph	230		45		10			
	NW (8), vph								
Output	Total Vehicles	1000	0	170	0	155	0	110	0

Volume Characteristics	N	NE	E	SE	S	SW	W	NW
% Trucks	0.0	0.0	0.0	0.0	0.0	0.0	0.0	0.0
E_t	2.0	2.0	2.0	2.0	2.0	2.0	2.0	2.0
PHF	1.00	1.00	1.00	1.00	1.00	1.00	1.00	1.00
F_{HV}	1.000	1.000	1.000	1.000	1.000	1.000	1.000	1.000

Entry/Conflicting Flows	N	NE	E	SE	S	SW	W	NW
Flow to Leg # N (1), pcu/h	250	0	115	0	115	0	55	0
NE (2), pcu/h	0	0	0	0	0	0	0	0
E (3), pcu/h	220	0	0	0	30	0	45	0
SE (4), pcu/h	0	0	0	0	0	0	0	0
S (5), pcu/h	300	0	10	0	0	0	10	0
SW (6), pcu/h	0	0	0	0	0	0	0	0
W (7), pcu/h	230	0	45	0	10	0	0	0
NW (8), pcu/h	0	0	0	0	0	0	0	0
Entry flow, pcu/h	1000	0	170	0	155	0	110	0
Conflicting flow, pcu/h	65	600	430	725	570	890	780	1065

Results	N	NE	E	SE	S	SW	W	NW
Entry Capacity, pcu/h	1059	NA	735	NA	639	NA	518	NA
Leg v/c ratio	0.94		0.23		0.24		0.21	
Control Delay, s/pcu	30.9		6.4		7.4		8.8	
LOS	D		A		A		A	
95th Percentile Queue (ft)	1542	0	262	0	239	0	170	0

Appendix H: 2035 Traffic Operations Mitigated with South Hillsboro

Movement	EBL	EBT	EBR	WBL	WBT	WBR	NBL	NBT	NBR	SBL	SBT	SBR
Lane Configurations												
Volume (vph)	5	905	250	115	1355	45	405	95	155	60	70	5
Ideal Flow (vphpl)	1900	1900	1900	1900	1900	1900	1900	1900	1900	1900	1900	1900
Total Lost time (s)	4.0	4.0		4.0	4.0		3.0	4.0		3.0	4.0	
Lane Util. Factor	1.00	0.95		1.00	0.95		0.97	1.00		1.00	1.00	
Frt	1.00	0.97		1.00	1.00		1.00	0.91		1.00	0.99	
Flt Protected	0.95	1.00		0.95	1.00		0.95	1.00		0.95	1.00	
Satd. Flow (prot)	1805	3458		1805	3587		3502	1617		1770	1864	
Flt Permitted	0.09	1.00		0.17	1.00		0.95	1.00		0.95	1.00	
Satd. Flow (perm)	164	3458		321	3587		3502	1617		1770	1864	
Peak-hour factor, PHF	1.00	1.00	1.00	1.00	1.00	1.00	1.00	1.00	1.00	1.00	1.00	1.00
Adj. Flow (vph)	5	905	250	115	1355	45	405	95	155	60	70	5
RTOR Reduction (vph)	0	21	0	0	2	0	0	68	0	0	3	0
Lane Group Flow (vph)	5	1134	0	115	1398	0	405	182	0	60	72	0
Heavy Vehicles (%)	0%	1%	1%	0%	0%	5%	0%	1%	10%	2%	1%	0%
Turn Type	pm+pt			pm+pt			Prot			Prot		
Protected Phases	5	2		1	6		3	8		7	4	
Permitted Phases	2			6								
Actuated Green, G (s)	51.1	51.1		60.0	59.5		11.0	18.2		4.0	11.2	
Effective Green, g (s)	51.1	51.6		60.0	60.0		12.0	19.2		5.0	12.2	
Actuated g/C Ratio	0.51	0.52		0.60	0.60		0.12	0.19		0.05	0.12	
Clearance Time (s)	4.0	4.5		4.0	4.5		4.0	5.0		4.0	5.0	
Vehicle Extension (s)	2.3	4.3		2.3	4.3		2.5	2.5		2.5	2.5	
Lane Grp Cap (vph)	97	1784		329	2152		420	310		89	227	
v/s Ratio Prot	0.00	c0.33		0.03	c0.39		c0.12	c0.11		0.03	0.04	
v/s Ratio Perm	0.03			0.18								
v/c Ratio	0.05	0.64		0.35	0.65		0.96	0.59		0.67	0.32	
Uniform Delay, d1	15.9	17.4		20.7	13.1		43.8	36.8		46.7	40.1	
Progression Factor	1.00	1.00		2.21	2.43		1.00	1.00		1.00	1.00	
Incremental Delay, d2	0.1	1.7		0.2	0.8		34.5	2.4		16.7	0.6	
Delay (s)	16.0	19.2		46.1	32.6		78.2	39.1		63.4	40.7	
Level of Service	B	B		D	C		E	D		E	D	
Approach Delay (s)		19.2			33.6			63.3			50.8	
Approach LOS		B			C			E			D	

Intersection Summary			
HCM Average Control Delay	35.1	HCM Level of Service	D
HCM Volume to Capacity ratio	0.68		
Actuated Cycle Length (s)	100.0	Sum of lost time (s)	11.0
Intersection Capacity Utilization	75.4%	ICU Level of Service	D
Analysis Period (min)	15		

c Critical Lane Group

Movement	EBL	EBT	EBR	WBL	WBT	WBR	NBL	NBT	NBR	SBL	SBT	SBR
Lane Configurations												
Volume (vph)	40	230	200	65	525	200	155	375	70	135	225	30
Ideal Flow (vphpl)	1900	1900	1900	1900	1900	1900	1900	1900	1900	1900	1900	1900
Total Lost time (s)	4.0	4.0		4.0	4.0		4.0	4.0	5.5	4.0	4.0	
Lane Util. Factor	1.00	1.00		1.00	1.00		1.00	1.00	1.00	1.00	1.00	
Frt	1.00	0.93		1.00	0.96		1.00	1.00	0.85	1.00	0.98	
Flt Protected	0.95	1.00		0.95	1.00		0.95	1.00	1.00	0.95	1.00	
Satd. Flow (prot)	1805	1751		1805	1821		1805	1900	1615	1805	1850	
Flt Permitted	0.95	1.00		0.95	1.00		0.95	1.00	1.00	0.95	1.00	
Satd. Flow (perm)	1805	1751		1805	1821		1805	1900	1615	1805	1850	
Peak-hour factor, PHF	1.00	1.00	1.00	1.00	1.00	1.00	1.00	1.00	1.00	1.00	1.00	1.00
Adj. Flow (vph)	40	230	200	65	525	200	155	375	70	135	225	30
RTOR Reduction (vph)	0	37	0	0	16	0	0	0	52	0	6	0
Lane Group Flow (vph)	40	393	0	65	709	0	155	375	18	135	249	0
Heavy Vehicles (%)	0%	0%	2%	0%	0%	0%	0%	0%	0%	0%	1%	0%
Turn Type	Prot			Prot			Prot		Perm	Prot		
Protected Phases	5	2		1	6		7	4		3	8	
Permitted Phases									4			
Actuated Green, G (s)	2.7	30.0		5.4	32.5		9.2	18.2	18.2	7.0	15.9	
Effective Green, g (s)	4.2	31.0		6.9	33.7		10.8	19.2	17.7	8.6	17.0	
Actuated g/C Ratio	0.05	0.38		0.08	0.41		0.13	0.24	0.22	0.11	0.21	
Clearance Time (s)	5.5	5.0		5.5	5.2		5.6	5.0	5.0	5.6	5.1	
Vehicle Extension (s)	3.1	2.5		3.1	2.5		2.9	2.5	2.5	2.9	2.5	
Lane Grp Cap (vph)	93	664		152	751		239	447	350	190	385	
v/s Ratio Prot	0.02	0.22		c0.04	c0.39		c0.09	c0.20		0.07	0.13	
v/s Ratio Perm									0.01			
v/c Ratio	0.43	0.59		0.43	0.94		0.65	0.84	0.05	0.71	0.65	
Uniform Delay, d1	37.6	20.3		35.5	23.1		33.6	29.8	25.4	35.3	29.6	
Progression Factor	1.00	1.00		1.00	1.00		1.00	1.00	1.00	1.00	1.00	
Incremental Delay, d2	3.3	1.2		2.0	20.3		5.8	12.7	0.0	11.7	3.3	
Delay (s)	40.9	21.5		37.5	43.4		39.5	42.5	25.4	47.0	32.9	
Level of Service	D	C		D	D		D	D	C	D	C	
Approach Delay (s)		23.1			42.9			39.7			37.8	
Approach LOS		C			D			D			D	

Intersection Summary			
HCM Average Control Delay	37.0	HCM Level of Service	D
HCM Volume to Capacity ratio	0.82		
Actuated Cycle Length (s)	81.7	Sum of lost time (s)	12.0
Intersection Capacity Utilization	84.5%	ICU Level of Service	E
Analysis Period (min)	15		

c Critical Lane Group

Movement	EBL	EBT	EBR	WBL	WBT	WBR	NBL	NBT	NBR	SBL	SBT	SBR
Lane Configurations												
Volume (vph)	120	820	65	115	1295	65	150	315	145	105	210	50
Ideal Flow (vphpl)	1900	1900	1900	1900	1900	1900	1900	1900	1900	1900	1900	1900
Total Lost time (s)	4.0	4.0		4.0	4.0	4.0		4.0	4.0	4.0	4.0	4.0
Lane Util. Factor	1.00	0.95		1.00	0.95	1.00		0.95	1.00	1.00	1.00	1.00
Frt	1.00	0.99		1.00	1.00	0.85		1.00	0.85	1.00	1.00	0.85
Flt Protected	0.95	1.00		0.95	1.00	1.00		0.98	1.00	0.95	1.00	1.00
Satd. Flow (prot)	1805	3521		1626	3574	1615		3518	1495	1805	1900	1583
Flt Permitted	0.95	1.00		0.95	1.00	1.00		0.98	1.00	0.95	1.00	1.00
Satd. Flow (perm)	1805	3521		1626	3574	1615		3518	1495	1805	1900	1583
Peak-hour factor, PHF	1.00	1.00	1.00	1.00	1.00	1.00	1.00	1.00	1.00	1.00	1.00	1.00
Adj. Flow (vph)	120	820	65	115	1295	65	150	315	145	105	210	50
RTOR Reduction (vph)	0	6	0	0	0	28	0	0	120	0	0	34
Lane Group Flow (vph)	120	879	0	115	1295	37	0	465	25	105	210	16
Heavy Vehicles (%)	0%	0%	8%	11%	1%	0%	1%	1%	8%	0%	0%	2%
Bus Blockages (#/hr)	0	4	4	0	0	0	0	0	0	0	0	0
Turn Type	Prot			Prot		Perm	Split		Perm	Split		custom
Protected Phases	5	2		1	6		4	4		8	8	
Permitted Phases						6			4			8 5
Actuated Green, G (s)	12.5	36.1		15.3	38.9	38.9		17.0	17.0	15.1	15.1	31.6
Effective Green, g (s)	12.5	36.6		15.3	39.4	39.4		17.0	17.0	15.1	15.1	31.6
Actuated g/C Ratio	0.12	0.37		0.15	0.39	0.39		0.17	0.17	0.15	0.15	0.32
Clearance Time (s)	4.0	4.5		4.0	4.5	4.5		4.0	4.0	4.0	4.0	
Vehicle Extension (s)	2.3	4.3		2.3	4.3	4.3		2.3	2.3	2.3	2.3	
Lane Grp Cap (vph)	226	1289		249	1408	636		598	254	273	287	500
v/s Ratio Prot	c0.07	0.25		0.07	c0.36			c0.13		0.06	c0.11	
v/s Ratio Perm						0.02			0.02			0.01
v/c Ratio	0.53	0.68		0.46	0.92	0.06		0.78	0.10	0.38	0.73	0.03
Uniform Delay, d1	41.0	26.8		38.6	28.8	18.8		39.7	35.0	38.3	40.5	23.6
Progression Factor	1.03	1.27		1.00	1.00	1.00		1.00	1.00	1.00	1.00	1.00
Incremental Delay, d2	1.3	2.4		0.8	11.2	0.2		6.0	0.1	0.5	8.5	0.0
Delay (s)	43.4	36.5		39.4	40.0	19.0		45.6	35.1	38.8	49.0	23.6
Level of Service	D	D		D	D	B		D	D	D	D	C
Approach Delay (s)		37.3			39.0			43.1			42.6	
Approach LOS		D			D			D			D	

Intersection Summary			
HCM Average Control Delay	39.6	HCM Level of Service	D
HCM Volume to Capacity ratio	0.80		
Actuated Cycle Length (s)	100.0	Sum of lost time (s)	16.0
Intersection Capacity Utilization	79.9%	ICU Level of Service	D
Analysis Period (min)	15		
c Critical Lane Group			

Movement	EBL	EBT	EBR	WBL	WBT	WBR	NBL	NBT	NBR	SBL	SBT	SBR
Lane Configurations												
Volume (vph)	80	1005	85	160	1400	165	220	450	345	200	195	160
Ideal Flow (vphpl)	1900	1900	1900	1900	1900	1900	1900	1900	1900	1900	1900	1900
Total Lost time (s)	4.0	4.0	4.0	4.0	4.0	4.0	4.0	4.0	4.5	4.0	4.0	
Lane Util. Factor	1.00	0.95	1.00	1.00	0.95	1.00	1.00	0.95	1.00	1.00	0.95	
Frt	1.00	1.00	0.85	1.00	1.00	0.85	1.00	1.00	0.85	1.00	0.93	
Flt Protected	0.95	1.00	1.00	0.95	1.00	1.00	0.95	1.00	1.00	0.95	1.00	
Satd. Flow (prot)	1805	3511	1615	1736	3546	1615	1805	3610	1615	1805	3351	
Flt Permitted	0.95	1.00	1.00	0.95	1.00	1.00	0.95	1.00	1.00	0.95	1.00	
Satd. Flow (perm)	1805	3511	1615	1736	3546	1615	1805	3610	1615	1805	3351	
Peak-hour factor, PHF	1.00	1.00	1.00	1.00	1.00	1.00	1.00	1.00	1.00	1.00	1.00	1.00
Adj. Flow (vph)	80	1005	85	160	1400	165	220	450	345	200	195	160
RTOR Reduction (vph)	0	0	45	0	0	79	0	0	47	0	125	0
Lane Group Flow (vph)	80	1005	40	160	1400	86	220	450	298	200	230	0
Heavy Vehicles (%)	0%	2%	0%	4%	1%	0%	0%	0%	0%	0%	0%	1%
Bus Blockages (#/hr)	0	4	0	0	4	0	0	0	0	0	0	0
Turn Type	Prot		Perm	Prot		Perm	Prot		pt+ov	Prot		
Protected Phases	5	2		1	6		3	8	8 1	7	4	
Permitted Phases			2			6						
Actuated Green, G (s)	8.8	55.2	55.2	13.3	59.7	59.7	15.0	19.6	37.4	14.0	18.6	
Effective Green, g (s)	8.8	56.6	56.6	13.3	61.1	61.1	15.0	20.1	37.4	14.0	19.1	
Actuated g/C Ratio	0.07	0.47	0.47	0.11	0.51	0.51	0.12	0.17	0.31	0.12	0.16	
Clearance Time (s)	4.0	5.4	5.4	4.0	5.4	5.4	4.0	4.5		4.0	4.5	
Vehicle Extension (s)	2.3	4.4	4.4	2.3	4.4	4.4	2.3	2.3		2.3	2.3	
Lane Grp Cap (vph)	132	1656	762	192	1806	822	226	605	503	211	533	
v/s Ratio Prot	0.04	0.29		c0.09	c0.39		c0.12	c0.12	0.18	0.11	0.07	
v/s Ratio Perm			0.02			0.05						
v/c Ratio	0.61	0.61	0.05	0.83	0.78	0.10	0.97	0.74	0.59	0.95	0.43	
Uniform Delay, d1	53.9	23.5	17.2	52.3	23.9	15.3	52.3	47.5	34.9	52.6	45.5	
Progression Factor	1.00	1.00	1.00	0.85	0.77	1.16	1.00	1.00	1.00	1.00	1.00	
Incremental Delay, d2	6.0	1.7	0.1	14.3	1.7	0.1	51.9	4.5	1.4	46.7	0.3	
Delay (s)	59.9	25.1	17.3	58.6	20.2	17.8	104.2	52.0	36.3	99.3	45.9	
Level of Service	E	C	B	E	C	B	F	D	D	F	D	
Approach Delay (s)		26.9			23.5			58.0			65.1	
Approach LOS		C			C			E			E	

Intersection Summary			
HCM Average Control Delay	37.4	HCM Level of Service	D
HCM Volume to Capacity ratio	0.77		
Actuated Cycle Length (s)	120.0	Sum of lost time (s)	8.0
Intersection Capacity Utilization	80.0%	ICU Level of Service	D
Analysis Period (min)	15		
c Critical Lane Group			

Movement	EBL	EBT	EBR	WBL	WBT	WBR	NBL	NBT	NBR	SBL	SBT	SBR
Lane Configurations												
Volume (veh/h)	0	0	230	0	0	65	0	950	15	0	300	140
Sign Control		Stop			Stop			Free			Free	
Grade		0%			0%			0%			0%	
Peak Hour Factor	1.00	1.00	1.00	1.00	1.00	1.00	1.00	1.00	1.00	1.00	1.00	1.00
Hourly flow rate (vph)	0	0	230	0	0	65	0	950	15	0	300	140
Pedestrians												
Lane Width (ft)												
Walking Speed (ft/s)												
Percent Blockage												
Right turn flare (veh)												
Median type								None			None	
Median storage veh)												
Upstream signal (ft)											280	
pX, platoon unblocked	0.92	0.92	0.92	0.92	0.92		0.92					
vC, conflicting volume	1322	1265	300	1488	1398	958	440			965		
vC1, stage 1 conf vol												
vC2, stage 2 conf vol												
vCu, unblocked vol	1307	1245	199	1486	1389	958	350			965		
tC, single (s)	7.1	6.5	6.2	7.1	6.5	6.2	4.1			4.1		
tC, 2 stage (s)												
tF (s)	3.5	4.0	3.3	3.5	4.0	3.3	2.2			2.2		
p0 queue free %	100	100	71	100	100	79	100			100		
cM capacity (veh/h)	101	162	782	67	133	315	1125			722		

Direction, Lane #	EB 1	WB 1	NB 1	SB 1	SB 2
Volume Total	230	65	965	300	140
Volume Left	0	0	0	0	0
Volume Right	230	65	15	0	140
cSH	782	315	1700	1700	1700
Volume to Capacity	0.29	0.21	0.57	0.18	0.08
Queue Length 95th (ft)	31	19	0	0	0
Control Delay (s)	11.5	19.4	0.0	0.0	0.0
Lane LOS	B	C			
Approach Delay (s)	11.5	19.4	0.0	0.0	
Approach LOS	B	C			

Intersection Summary			
Average Delay	2.3		
Intersection Capacity Utilization	61.6%	ICU Level of Service	B
Analysis Period (min)	15		

Movement	EBL	EBT	EBR	WBL	WBT	WBR	NBL	NBT	NBR	SBL	SBT	SBR
Lane Configurations												
Volume (vph)	275	1230	165	60	1310	25	315	285	400	30	140	180
Ideal Flow (vphpl)	1900	1900	1900	1900	1900	1900	1900	1900	1900	1900	1900	1900
Total Lost time (s)	4.0	4.0	4.0	4.0	4.0		4.0	4.0		4.0	4.0	
Lane Util. Factor	1.00	0.95	1.00	1.00	0.95		1.00	0.95		1.00	0.95	
Frt	1.00	1.00	0.85	1.00	1.00		1.00	0.91		1.00	0.92	
Flt Protected	0.95	1.00	1.00	0.95	1.00		0.95	1.00		0.95	1.00	
Satd. Flow (prot)	1703	3406	1495	1641	3430		1597	2779		1752	3255	
Flt Permitted	0.08	1.00	1.00	0.09	1.00		0.26	1.00		0.29	1.00	
Satd. Flow (perm)	150	3406	1495	149	3430		431	2779		529	3255	
Peak-hour factor, PHF	1.00	1.00	1.00	1.00	1.00	1.00	1.00	1.00	1.00	1.00	1.00	1.00
Adj. Flow (vph)	275	1230	165	60	1310	25	315	285	400	30	140	180
RTOR Reduction (vph)	0	0	45	0	1	0	0	191	0	0	156	0
Lane Group Flow (vph)	275	1230	120	60	1334	0	315	494	0	30	164	0
Heavy Vehicles (%)	6%	6%	8%	10%	5%	3%	13%	15%	21%	3%	1%	2%
Turn Type	pm+pt		Perm	pm+pt			pm+pt			pm+pt		
Protected Phases	5	2		1	6		3	8		7	4	
Permitted Phases	2		2	6			8			4		
Actuated Green, G (s)	63.5	62.1	62.1	52.0	52.0		38.3	30.0		20.1	15.8	
Effective Green, g (s)	63.5	63.5	63.5	52.0	53.4		38.3	30.5		20.1	16.3	
Actuated g/C Ratio	0.53	0.53	0.53	0.43	0.44		0.32	0.25		0.17	0.14	
Clearance Time (s)	4.0	5.4	5.4	4.0	5.4		4.0	4.5		4.0	4.5	
Vehicle Extension (s)	2.3	4.5	4.5	2.3	4.5		2.5	2.5		2.5	2.5	
Lane Grp Cap (vph)	284	1802	791	135	1526		317	706		132	442	
v/s Ratio Prot	c0.13	0.36		0.02	c0.39		c0.15	0.18		0.01	0.05	
v/s Ratio Perm	c0.38		0.08	0.17			c0.16			0.03		
v/c Ratio	0.97	0.68	0.15	0.44	0.87		0.99	0.70		0.23	0.37	
Uniform Delay, d1	42.1	20.8	14.5	24.8	30.2		36.3	40.6		42.4	47.2	
Progression Factor	0.84	0.71	0.57	1.47	0.79		1.00	1.00		1.00	1.00	
Incremental Delay, d2	35.1	1.4	0.3	1.3	6.7		48.6	2.8		0.6	0.4	
Delay (s)	70.5	16.2	8.5	37.8	30.5		84.8	43.4		43.0	47.6	
Level of Service	E	B	A	D	C		F	D		D	D	
Approach Delay (s)		24.3			30.8			56.5			47.2	
Approach LOS		C			C			E			D	

Intersection Summary			
HCM Average Control Delay	35.5	HCM Level of Service	D
HCM Volume to Capacity ratio	0.95		
Actuated Cycle Length (s)	120.0	Sum of lost time (s)	12.0
Intersection Capacity Utilization	92.7%	ICU Level of Service	F
Analysis Period (min)	15		

c Critical Lane Group

Movement	EBL	EBT	EBR	WBL	WBT	WBR	NBL	NBT	NBR	SBL	SBT	SBR
Lane Configurations												
Volume (vph)	260	90	40	75	35	195	140	1165	220	75	600	100
Ideal Flow (vphpl)	1900	1900	1900	1900	1900	1900	1900	1900	1900	1900	1900	1900
Total Lost time (s)	5.0	5.0		5.0	5.0		5.0	5.0		5.0	5.0	
Lane Util. Factor	1.00	1.00		1.00	1.00		1.00	0.95		1.00	0.95	
Frt	1.00	0.95		1.00	0.87		1.00	0.98		1.00	0.98	
Flt Protected	0.95	1.00		0.95	1.00		0.95	1.00		0.95	1.00	
Satd. Flow (prot)	1770	1777		1770	1626		1770	3455		1770	3463	
Flt Permitted	0.23	1.00		0.67	1.00		0.28	1.00		0.11	1.00	
Satd. Flow (perm)	428	1777		1255	1626		524	3455		199	3463	
Peak-hour factor, PHF	1.00	1.00	1.00	1.00	1.00	1.00	1.00	1.00	1.00	1.00	1.00	1.00
Adj. Flow (vph)	260	90	40	75	35	195	140	1165	220	75	600	100
RTOR Reduction (vph)	0	14	0	0	139	0	0	13	0	0	12	0
Lane Group Flow (vph)	260	116	0	75	91	0	140	1372	0	75	688	0
Turn Type	pm+pt			pm+pt			pm+pt			pm+pt		
Protected Phases	3	8		7	4		1	6		5	2	
Permitted Phases	8			4			6			2		
Actuated Green, G (s)	30.5	22.1		16.8	12.9		48.0	40.3		43.4	38.0	
Effective Green, g (s)	30.0	21.6		15.8	12.4		47.0	39.8		42.4	37.5	
Actuated g/C Ratio	0.33	0.24		0.18	0.14		0.52	0.44		0.47	0.42	
Clearance Time (s)	4.5	4.5		4.5	4.5		4.5	4.5		4.5	4.5	
Vehicle Extension (s)	2.5	2.5		2.5	2.5		2.5	2.5		2.5	2.5	
Lane Grp Cap (vph)	332	428		241	225		375	1533		180	1448	
v/s Ratio Prot	c0.11	0.07		0.01	0.06		c0.03	c0.40		0.02	0.20	
v/s Ratio Perm	c0.15			0.04			0.17			0.17		
v/c Ratio	0.78	0.27		0.31	0.41		0.37	0.90		0.42	0.48	
Uniform Delay, d1	24.2	27.6		31.8	35.3		11.8	23.0		17.5	19.0	
Progression Factor	1.00	1.00		1.00	1.00		1.00	1.00		1.00	1.00	
Incremental Delay, d2	11.0	0.2		0.5	0.9		0.5	7.2		1.1	0.2	
Delay (s)	35.2	27.9		32.3	36.2		12.3	30.2		18.6	19.1	
Level of Service	D	C		C	D		B	C		B	B	
Approach Delay (s)		32.8			35.2			28.5			19.1	
Approach LOS		C			D			C			B	

Intersection Summary			
HCM Average Control Delay	27.3	HCM Level of Service	C
HCM Volume to Capacity ratio	0.76		
Actuated Cycle Length (s)	89.7	Sum of lost time (s)	10.0
Intersection Capacity Utilization	88.3%	ICU Level of Service	E
Analysis Period (min)	15		
c Critical Lane Group			

Movement	EBL	EBT	WBT	WBR	SBL	SBR
Lane Configurations						
Volume (vph)	60	1425	1240	110	105	35
Ideal Flow (vphpl)	1900	1900	1900	1900	1900	1900
Total Lost time (s)	4.0	4.0	4.0	4.0	4.0	4.0
Lane Util. Factor	1.00	0.95	0.95	1.00	1.00	1.00
Frt	1.00	1.00	1.00	0.85	1.00	0.85
Flt Protected	0.95	1.00	1.00	1.00	0.95	1.00
Satd. Flow (prot)	1805	3539	3539	1568	1719	1615
Flt Permitted	0.95	1.00	1.00	1.00	0.95	1.00
Satd. Flow (perm)	1805	3539	3539	1568	1719	1615
Peak-hour factor, PHF	1.00	1.00	1.00	1.00	1.00	1.00
Adj. Flow (vph)	60	1425	1240	110	105	35
RTOR Reduction (vph)	0	0	0	10	0	31
Lane Group Flow (vph)	60	1425	1240	100	105	4
Heavy Vehicles (%)	0%	2%	2%	3%	5%	0%
Turn Type	Prot			Perm		Prot
Protected Phases	5	2	6		4	4
Permitted Phases				6		
Actuated Green, G (s)	7.6	97.7	86.1	86.1	11.7	11.7
Effective Green, g (s)	7.6	99.1	87.5	87.5	12.9	12.9
Actuated g/C Ratio	0.06	0.83	0.73	0.73	0.11	0.11
Clearance Time (s)	4.0	5.4	5.4	5.4	5.2	5.2
Vehicle Extension (s)	2.3	4.5	4.5	4.5	2.5	2.5
Lane Grp Cap (vph)	114	2923	2581	1143	185	174
v/s Ratio Prot	0.03	c0.40	0.35		c0.06	0.00
v/s Ratio Perm				0.06		
v/c Ratio	0.53	0.49	0.48	0.09	0.57	0.02
Uniform Delay, d1	54.5	3.0	6.8	4.7	50.9	47.9
Progression Factor	0.99	0.40	0.13	0.02	1.00	1.00
Incremental Delay, d2	2.1	0.4	0.5	0.1	3.2	0.0
Delay (s)	55.9	1.6	1.4	0.2	54.1	47.9
Level of Service	E	A	A	A	D	D
Approach Delay (s)		3.8	1.3		52.6	
Approach LOS		A	A		D	

Intersection Summary			
HCM Average Control Delay	5.0	HCM Level of Service	A
HCM Volume to Capacity ratio	0.50		
Actuated Cycle Length (s)	120.0	Sum of lost time (s)	8.0
Intersection Capacity Utilization	53.4%	ICU Level of Service	A
Analysis Period (min)	15		

c Critical Lane Group

Movement	EBL	EBT	EBR	WBL	WBT	WBR	NBL	NBT	NBR	SBL	SBT	SBR
Lane Configurations												
Volume (vph)	195	150	75	140	125	275	110	325	145	145	125	100
Ideal Flow (vphpl)	1900	1900	1900	1900	1900	1900	1900	1900	1900	1900	1900	1900
Total Lost time (s)	4.5	4.5		4.5	4.5		4.5	4.5		4.5	4.5	
Lane Util. Factor	1.00	1.00		1.00	1.00		1.00	1.00		1.00	1.00	
Frt	1.00	0.95		1.00	0.90		1.00	0.95		1.00	0.93	
Flt Protected	0.95	1.00		0.95	1.00		0.95	1.00		0.95	1.00	
Satd. Flow (prot)	1770	1770		1805	1693		1770	1812		1805	1758	
Flt Permitted	0.16	1.00		0.60	1.00		0.62	1.00		0.17	1.00	
Satd. Flow (perm)	293	1770		1146	1693		1151	1812		329	1758	
Peak-hour factor, PHF	1.00	1.00	1.00	1.00	1.00	1.00	1.00	1.00	1.00	1.00	1.00	1.00
Adj. Flow (vph)	195	150	75	140	125	275	110	325	145	145	125	100
RTOR Reduction (vph)	0	17	0	0	71	0	0	14	0	0	24	0
Lane Group Flow (vph)	195	208	0	140	329	0	110	456	0	145	201	0
Heavy Vehicles (%)	2%	2%	2%	0%	2%	0%	2%	0%	0%	0%	0%	2%
Turn Type	pm+pt			pm+pt			pm+pt			pm+pt		
Protected Phases	3	8		7	4		1	6		5	2	
Permitted Phases	8			4			6			2		
Actuated Green, G (s)	37.0	25.9		29.4	22.1		32.9	28.3		41.9	33.3	
Effective Green, g (s)	36.0	25.4		28.4	21.6		31.9	27.8		41.4	32.8	
Actuated g/C Ratio	0.41	0.29		0.33	0.25		0.37	0.32		0.48	0.38	
Clearance Time (s)	4.0	4.0		4.0	4.0		4.0	4.0		4.0	4.0	
Vehicle Extension (s)	2.5	2.5		2.5	2.5		2.5	2.5		2.5	2.5	
Lane Grp Cap (vph)	301	516		425	420		451	578		311	662	
v/s Ratio Prot	c0.08	0.12		0.03	c0.19		0.01	c0.25		c0.05	0.11	
v/s Ratio Perm	0.19			0.08			0.08			0.17		
v/c Ratio	0.65	0.40		0.33	0.78		0.24	0.79		0.47	0.30	
Uniform Delay, d1	19.2	24.8		21.4	30.6		18.7	27.0		16.0	19.1	
Progression Factor	1.00	1.00		1.00	1.00		1.00	1.00		1.00	1.00	
Incremental Delay, d2	4.2	0.4		0.3	8.9		0.2	6.8		0.8	0.2	
Delay (s)	23.4	25.1		21.8	39.5		18.9	33.8		16.8	19.3	
Level of Service	C	C		C	D		B	C		B	B	
Approach Delay (s)		24.3			34.9			30.9			18.3	
Approach LOS		C			C			C			B	

Intersection Summary			
HCM Average Control Delay	28.2	HCM Level of Service	C
HCM Volume to Capacity ratio	0.78		
Actuated Cycle Length (s)	87.1	Sum of lost time (s)	22.5
Intersection Capacity Utilization	83.2%	ICU Level of Service	E
Analysis Period (min)	15		

c Critical Lane Group

Movement	EBL	EBT	EBR	WBL	WBT	WBR	NBL	NBT	NBR	SBL	SBT	SBR
Lane Configurations												
Volume (vph)	175	430	90	125	435	235	200	960	80	135	315	145
Ideal Flow (vphpl)	1900	1900	1900	1900	1900	1900	1900	1900	1900	1900	1900	1900
Total Lost time (s)	4.0	4.0		4.0	4.0		4.0	4.0		4.0	4.0	
Lane Util. Factor	1.00	1.00		1.00	1.00		1.00	0.95		1.00	0.95	
Frt	1.00	0.97		1.00	0.95		1.00	0.99		1.00	0.95	
Flt Protected	0.95	1.00		0.95	1.00		0.95	1.00		0.95	1.00	
Satd. Flow (prot)	1805	1851		1805	1800		1805	3568		1805	3439	
Flt Permitted	0.95	1.00		0.95	1.00		0.37	1.00		0.09	1.00	
Satd. Flow (perm)	1805	1851		1805	1800		701	3568		180	3439	
Peak-hour factor, PHF	1.00	1.00	1.00	1.00	1.00	1.00	1.00	1.00	1.00	1.00	1.00	1.00
Adj. Flow (vph)	175	430	90	125	435	235	200	960	80	135	315	145
RTOR Reduction (vph)	0	5	0	0	14	0	0	4	0	0	38	0
Lane Group Flow (vph)	175	515	0	125	656	0	200	1036	0	135	422	0
Heavy Vehicles (%)	0%	0%	0%	0%	0%	0%	0%	0%	0%	0%	0%	0%
Turn Type	Prot			Prot			pm+pt			pm+pt		
Protected Phases	3	8		7	4		1	6		5	2	
Permitted Phases							6			2		
Actuated Green, G (s)	14.6	54.3		11.6	51.3		49.5	40.9		50.3	41.3	
Effective Green, g (s)	15.6	55.7		12.6	52.7		51.5	42.4		52.3	42.8	
Actuated g/C Ratio	0.11	0.41		0.09	0.39		0.38	0.31		0.38	0.31	
Clearance Time (s)	5.0	5.4		5.0	5.4		5.0	5.5		5.0	5.5	
Vehicle Extension (s)	0.2	5.0		0.2	8.0		0.2	5.0		0.2	5.0	
Lane Grp Cap (vph)	206	754		166	694		342	1107		188	1077	
v/s Ratio Prot	c0.10	c0.28		0.07	c0.36		0.04	c0.29		c0.05	0.12	
v/s Ratio Perm							0.18			0.22		
v/c Ratio	0.85	0.68		0.75	0.95		0.58	0.94		0.72	0.39	
Uniform Delay, d1	59.4	33.2		60.5	40.6		31.2	45.8		33.8	36.8	
Progression Factor	1.00	1.00		1.00	1.00		1.00	1.00		1.00	1.00	
Incremental Delay, d2	25.5	3.3		15.6	23.2		1.6	14.6		10.4	0.5	
Delay (s)	84.9	36.5		76.2	63.8		32.8	60.4		44.2	37.2	
Level of Service	F	D		E	E		C	E		D	D	
Approach Delay (s)		48.7			65.8			56.0			38.8	
Approach LOS		D			E			E			D	

Intersection Summary			
HCM Average Control Delay	53.7	HCM Level of Service	D
HCM Volume to Capacity ratio	0.93		
Actuated Cycle Length (s)	136.7	Sum of lost time (s)	20.0
Intersection Capacity Utilization	96.8%	ICU Level of Service	F
Analysis Period (min)	15		

c Critical Lane Group

Movement	EBL	EBT	EBR	WBL	WBT	WBR	NBL	NBT	NBR	SBL	SBT	SBR
Lane Configurations												
Volume (vph)	160	1230	125	270	990	360	200	990	300	310	300	200
Ideal Flow (vphpl)	1900	1900	1900	1900	1900	1900	1900	1900	1900	1900	1900	1900
Total Lost time (s)	4.0	4.0	4.0	4.5	4.0	4.0	4.0	4.0	4.5	4.0	4.0	
Lane Util. Factor	0.97	0.95	1.00	0.97	0.95	1.00	0.97	0.95	1.00	0.97	0.95	
Frt	1.00	1.00	0.85	1.00	1.00	0.85	1.00	1.00	0.85	1.00	0.94	
Flt Protected	0.95	1.00	1.00	0.95	1.00	1.00	0.95	1.00	1.00	0.95	1.00	
Satd. Flow (prot)	3242	3610	1583	3433	3574	1583	3433	3539	1583	3433	3327	
Flt Permitted	0.95	1.00	1.00	0.95	1.00	1.00	0.95	1.00	1.00	0.95	1.00	
Satd. Flow (perm)	3242	3610	1583	3433	3574	1583	3433	3539	1583	3433	3327	
Peak-hour factor, PHF	1.00	1.00	1.00	1.00	1.00	1.00	1.00	1.00	1.00	1.00	1.00	1.00
Adj. Flow (vph)	160	1230	125	270	990	360	200	990	300	310	300	200
RTOR Reduction (vph)	0	0	64	0	0	157	0	0	93	0	92	0
Lane Group Flow (vph)	160	1230	61	270	990	203	200	990	207	310	408	0
Heavy Vehicles (%)	8%	0%	2%	2%	1%	2%	2%	2%	2%	2%	2%	2%
Turn Type	Prot		Perm	Prot		Perm	Prot		Perm	Prot		
Protected Phases	5	2		1	6		3	8		7	4	
Permitted Phases			2			6			8			
Actuated Green, G (s)	8.3	42.6	42.6	10.3	44.6	44.6	11.8	37.7	37.7	12.0	36.9	
Effective Green, g (s)	8.3	44.0	44.0	9.8	46.0	46.0	11.8	37.7	37.2	12.0	37.9	
Actuated g/C Ratio	0.07	0.37	0.37	0.08	0.38	0.38	0.10	0.31	0.31	0.10	0.32	
Clearance Time (s)	4.0	5.4	5.4	4.0	5.4	5.4	4.0	4.0	4.0	4.0	5.0	
Vehicle Extension (s)	2.3	4.5	4.5	2.5	4.5	4.5	2.5	2.5	2.5	2.3	2.3	
Lane Grp Cap (vph)	224	1324	580	280	1370	607	338	1112	491	343	1051	
v/s Ratio Prot	0.05	c0.34		c0.08	0.28		0.06	c0.28		c0.09	0.12	
v/s Ratio Perm			0.04			0.13			0.13			
v/c Ratio	0.71	0.93	0.11	0.96	0.72	0.33	0.59	0.89	0.42	0.90	0.39	
Uniform Delay, d1	54.7	36.5	25.0	54.9	31.6	26.2	51.8	39.2	32.9	53.4	32.0	
Progression Factor	1.07	0.86	0.64	0.81	1.17	2.05	1.09	1.09	1.36	1.00	1.00	
Incremental Delay, d2	8.3	11.6	0.3	39.0	2.8	1.2	1.2	5.0	0.2	25.7	0.1	
Delay (s)	66.8	42.9	16.3	83.4	39.5	54.9	57.6	47.6	44.9	79.2	32.2	
Level of Service	E	D	B	F	D	D	E	D	D	E	C	
Approach Delay (s)		43.3			50.2			48.4			50.1	
Approach LOS		D			D			D			D	

Intersection Summary			
HCM Average Control Delay	47.8	HCM Level of Service	D
HCM Volume to Capacity ratio	0.92		
Actuated Cycle Length (s)	120.0	Sum of lost time (s)	16.5
Intersection Capacity Utilization	91.7%	ICU Level of Service	F
Analysis Period (min)	15		

c Critical Lane Group

Movement	EBL	EBT	EBR	WBL	WBT	WBR	NBL	NBT	NBR	SBL	SBT	SBR
Lane Configurations												
Volume (vph)	80	150	170	290	65	160	165	1070	220	40	295	40
Ideal Flow (vphpl)	1900	1900	1900	1900	1900	1900	1900	1900	1900	1900	1900	1900
Total Lost time (s)	4.0	4.0		4.0	4.0		4.0	4.0		4.0	4.0	
Lane Util. Factor	1.00	1.00		1.00	1.00		1.00	0.95		1.00	0.95	
Frt	1.00	0.92		1.00	0.89		1.00	0.97		1.00	0.98	
Flt Protected	0.95	1.00		0.95	1.00		0.95	1.00		0.95	1.00	
Satd. Flow (prot)	1770	1714		1770	1664		1770	3449		1770	3476	
Flt Permitted	0.62	1.00		0.19	1.00		0.44	1.00		0.12	1.00	
Satd. Flow (perm)	1151	1714		345	1664		824	3449		218	3476	
Peak-hour factor, PHF	1.00	1.00	1.00	1.00	1.00	1.00	1.00	1.00	1.00	1.00	1.00	1.00
Adj. Flow (vph)	80	150	170	290	65	160	165	1070	220	40	295	40
RTOR Reduction (vph)	0	35	0	0	79	0	0	14	0	0	9	0
Lane Group Flow (vph)	80	285	0	290	146	0	165	1276	0	40	326	0
Turn Type	pm+pt			pm+pt			pm+pt			pm+pt		
Protected Phases	3	8		7	4		1	6		5	2	
Permitted Phases	8			4			6			2		
Actuated Green, G (s)	26.5	22.0		46.6	38.1		48.3	42.2		36.3	34.2	
Effective Green, g (s)	26.5	22.0		46.6	38.1		48.3	42.2		36.3	34.2	
Actuated g/C Ratio	0.26	0.21		0.45	0.37		0.47	0.41		0.35	0.33	
Clearance Time (s)	4.0	4.0		4.0	4.0		4.0	4.0		4.0	4.0	
Vehicle Extension (s)	2.5	2.5		2.5	2.5		2.5	2.5		2.5	2.5	
Lane Grp Cap (vph)	323	366		442	616		480	1414		109	1155	
v/s Ratio Prot	0.01	c0.17		c0.13	0.09		c0.03	c0.37		0.01	0.09	
v/s Ratio Perm	0.05			0.17			0.13			0.12		
v/c Ratio	0.25	0.78		0.66	0.24		0.34	0.90		0.37	0.28	
Uniform Delay, d1	29.7	38.1		20.5	22.4		16.3	28.4		25.2	25.3	
Progression Factor	1.00	1.00		1.00	1.00		1.00	1.00		1.00	1.00	
Incremental Delay, d2	0.3	9.6		3.1	0.1		0.3	8.3		1.5	0.1	
Delay (s)	30.0	47.7		23.6	22.5		16.6	36.8		26.7	25.4	
Level of Service	C	D		C	C		B	D		C	C	
Approach Delay (s)		44.2			23.1			34.5			25.5	
Approach LOS		D			C			C			C	

Intersection Summary			
HCM Average Control Delay	32.5	HCM Level of Service	C
HCM Volume to Capacity ratio	0.81		
Actuated Cycle Length (s)	102.9	Sum of lost time (s)	16.0
Intersection Capacity Utilization	87.6%	ICU Level of Service	E
Analysis Period (min)	15		
c Critical Lane Group			

Movement	EBL	EBT	EBR	WBL	WBT	WBR	NBL	NBT	NBR	SBL	SBT	SBR
Lane Configurations												
Volume (vph)	10	1550	265	155	1295	50	225	450	165	55	100	15
Ideal Flow (vphpl)	1900	1900	1900	1900	1900	1900	1900	1900	1900	1900	1900	1900
Total Lost time (s)	4.0	4.0	4.0	4.0	4.0	4.0	4.0	4.0	5.0	4.0	4.0	
Lane Util. Factor	1.00	0.95	1.00	1.00	0.95	1.00	1.00	1.00	1.00	1.00	0.95	
Frt	1.00	1.00	0.85	1.00	1.00	0.85	1.00	1.00	0.85	1.00	0.98	
Flt Protected	0.95	1.00	1.00	0.95	1.00	1.00	0.95	1.00	1.00	0.95	1.00	
Satd. Flow (prot)	1641	3438	1495	1671	3438	1615	1703	1863	1482	1752	3288	
Flt Permitted	0.95	1.00	1.00	0.95	1.00	1.00	0.61	1.00	1.00	0.15	1.00	
Satd. Flow (perm)	1641	3438	1495	1671	3438	1615	1102	1863	1482	276	3288	
Peak-hour factor, PHF	1.00	1.00	1.00	1.00	1.00	1.00	1.00	1.00	1.00	1.00	1.00	1.00
Adj. Flow (vph)	10	1550	265	155	1295	50	225	450	165	55	100	15
RTOR Reduction (vph)	0	0	91	0	0	10	0	0	121	0	10	0
Lane Group Flow (vph)	10	1550	174	155	1295	40	225	450	44	55	105	0
Heavy Vehicles (%)	10%	5%	8%	8%	5%	0%	6%	2%	9%	3%	7%	12%
Turn Type	Prot		Perm	Prot		Perm	pm+pt		Perm	pm+pt		
Protected Phases	5	2		1	6		3	8		7	4	
Permitted Phases			2			6	8		8	4		
Actuated Green, G (s)	0.8	54.9	54.9	15.2	69.3	69.3	35.5	29.5	29.5	29.9	26.7	
Effective Green, g (s)	0.8	55.6	55.6	15.2	70.0	70.0	35.5	30.0	29.0	29.9	27.2	
Actuated g/C Ratio	0.01	0.46	0.46	0.13	0.58	0.58	0.30	0.25	0.24	0.25	0.23	
Clearance Time (s)	4.0	4.7	4.7	4.0	4.7	4.7	4.0	4.5	4.5	4.0	4.5	
Vehicle Extension (s)	2.3	4.5	4.5	2.3	4.5	4.5	2.5	2.5	2.5	2.5	2.5	
Lane Grp Cap (vph)	11	1593	693	212	2006	942	356	466	358	108	745	
v/s Ratio Prot	0.01	c0.45		0.09	c0.38		c0.03	c0.24		0.01	0.03	
v/s Ratio Perm			0.12			0.02	0.16		0.03	0.11		
v/c Ratio	0.91	0.97	0.25	0.73	0.65	0.04	0.63	0.97	0.12	0.51	0.14	
Uniform Delay, d1	59.6	31.5	19.6	50.4	16.7	10.7	36.2	44.5	35.6	37.1	37.1	
Progression Factor	1.19	0.61	0.78	1.01	1.01	0.78	1.00	1.00	1.00	1.00	1.00	
Incremental Delay, d2	146.8	10.7	0.4	10.0	1.4	0.1	3.2	32.7	0.1	2.7	0.1	
Delay (s)	217.8	30.0	15.6	60.9	18.2	8.4	39.4	77.1	35.7	39.9	37.1	
Level of Service	F	C	B	E	B	A	D	E	D	D	D	
Approach Delay (s)		29.0			22.3			58.9			38.0	
Approach LOS		C			C			E			D	

Intersection Summary			
HCM Average Control Delay	32.8	HCM Level of Service	C
HCM Volume to Capacity ratio	0.91		
Actuated Cycle Length (s)	120.0	Sum of lost time (s)	12.0
Intersection Capacity Utilization	91.8%	ICU Level of Service	F
Analysis Period (min)	15		

c Critical Lane Group

Movement	EBL	EBT	EBR	WBL	WBT	WBR	NBL	NBT	NBR	SBL	SBT	SBR
Lane Configurations												
Volume (vph)	50	1490	165	175	1050	150	285	515	330	235	170	50
Ideal Flow (vphpl)	1900	1900	1900	1900	1900	1900	1900	1900	1900	1900	1900	1900
Total Lost time (s)	4.0	4.0	4.0	4.0	4.0	4.0	4.0	4.0		4.0	4.0	5.0
Lane Util. Factor	1.00	0.95	1.00	0.97	0.95	1.00	1.00	0.95		1.00	1.00	1.00
Frt	1.00	1.00	0.85	1.00	1.00	0.85	1.00	0.94		1.00	1.00	0.85
Flt Protected	0.95	1.00	1.00	0.95	1.00	1.00	0.95	1.00		0.95	1.00	1.00
Satd. Flow (prot)	1805	3574	1615	3502	3539	1615	1787	3399		1805	1863	1615
Flt Permitted	0.95	1.00	1.00	0.95	1.00	1.00	0.44	1.00		0.25	1.00	1.00
Satd. Flow (perm)	1805	3574	1615	3502	3539	1615	825	3399		466	1863	1615
Peak-hour factor, PHF	1.00	1.00	1.00	1.00	1.00	1.00	1.00	1.00	1.00	1.00	1.00	1.00
Adj. Flow (vph)	50	1490	165	175	1050	150	285	515	330	235	170	50
RTOR Reduction (vph)	0	0	56	0	0	39	0	88	0	0	0	43
Lane Group Flow (vph)	50	1490	109	175	1050	111	285	757	0	235	170	7
Heavy Vehicles (%)	0%	1%	0%	0%	2%	0%	1%	0%	0%	0%	2%	0%
Turn Type	Prot		Perm	Prot		Perm	pm+pt			pm+pt		Perm
Protected Phases	5	2		1	6		7	4		3	8	
Permitted Phases			2			6	4			8		8
Actuated Green, G (s)	5.5	51.1	51.1	6.9	52.5	52.5	48.6	29.3		31.1	16.3	16.3
Effective Green, g (s)	5.5	52.5	52.5	6.9	53.9	53.9	48.6	29.8		31.1	16.8	15.8
Actuated g/C Ratio	0.05	0.44	0.44	0.06	0.45	0.45	0.41	0.25		0.26	0.14	0.13
Clearance Time (s)	4.0	5.4	5.4	4.0	5.4	5.4	4.0	4.5		4.0	4.5	4.5
Vehicle Extension (s)	2.3	4.5	4.5	2.3	4.5	4.5	2.3	2.3		2.3	2.3	2.3
Lane Grp Cap (vph)	83	1564	707	201	1590	725	557	844		286	261	213
v/s Ratio Prot	0.03	c0.42		0.05	c0.30		0.12	c0.22		c0.10	0.09	
v/s Ratio Perm			0.07			0.07	0.09			0.11		0.00
v/c Ratio	0.60	0.95	0.15	0.87	0.66	0.15	0.51	0.90		0.82	0.65	0.03
Uniform Delay, d1	56.2	32.6	20.4	56.1	25.9	19.6	30.9	43.6		47.7	48.8	45.4
Progression Factor	1.39	0.44	0.42	1.00	1.00	1.00	1.00	1.00		1.00	1.00	1.00
Incremental Delay, d2	7.0	11.3	0.3	30.7	2.2	0.5	0.5	12.0		16.5	4.8	0.0
Delay (s)	85.2	25.5	8.9	86.8	28.1	20.0	31.4	55.6		64.2	53.7	45.5
Level of Service	F	C	A	F	C	C	C	E		E	D	D
Approach Delay (s)		25.7			34.7			49.5			58.2	
Approach LOS		C			C			D			E	

Intersection Summary			
HCM Average Control Delay	37.3	HCM Level of Service	D
HCM Volume to Capacity ratio	0.88		
Actuated Cycle Length (s)	120.0	Sum of lost time (s)	12.0
Intersection Capacity Utilization	97.3%	ICU Level of Service	F
Analysis Period (min)	15		

c Critical Lane Group

Movement	EBL	EBT	EBR	WBL	WBT	WBR	NBL	NBT	NBR	SBL	SBT	SBR
Lane Configurations												
Volume (vph)	210	1560	170	120	970	135	365	1050	205	185	485	135
Ideal Flow (vphpl)	1900	1900	1900	1900	1900	1900	1900	1900	1900	1900	1900	1900
Total Lost time (s)	4.0	4.0	4.0	4.0	4.0	4.0	4.0	4.0	4.0	4.0	4.0	4.0
Lane Util. Factor	0.97	0.95	1.00	0.97	0.95	1.00	0.97	0.95	1.00	0.97	0.95	1.00
Frt	1.00	1.00	0.85	1.00	1.00	0.85	1.00	1.00	0.85	1.00	1.00	0.85
Flt Protected	0.95	1.00	1.00	0.95	1.00	1.00	0.95	1.00	1.00	0.95	1.00	1.00
Satd. Flow (prot)	3467	3610	1615	3502	3574	1615	3502	3610	1615	3502	3574	1615
Flt Permitted	0.95	1.00	1.00	0.95	1.00	1.00	0.95	1.00	1.00	0.95	1.00	1.00
Satd. Flow (perm)	3467	3610	1615	3502	3574	1615	3502	3610	1615	3502	3574	1615
Peak-hour factor, PHF	1.00	1.00	1.00	1.00	1.00	1.00	1.00	1.00	1.00	1.00	1.00	1.00
Adj. Flow (vph)	210	1560	170	120	970	135	365	1050	205	185	485	135
RTOR Reduction (vph)	0	0	91	0	0	79	0	0	8	0	0	63
Lane Group Flow (vph)	210	1560	79	120	970	56	365	1050	197	185	485	72
Heavy Vehicles (%)	1%	0%	0%	0%	1%	0%	0%	0%	0%	0%	1%	0%
Turn Type	Prot		Perm	Prot		Perm	Prot		pm+ov	Prot		Perm
Protected Phases	5	2		1	6		3	8	1	7	4	
Permitted Phases			2			6			8			4
Actuated Green, G (s)	11.9	55.5	55.5	5.9	49.5	49.5	15.5	34.7	40.6	7.9	27.1	27.1
Effective Green, g (s)	11.4	56.0	56.0	5.4	50.0	50.0	15.0	35.2	39.6	7.4	27.6	27.6
Actuated g/C Ratio	0.10	0.47	0.47	0.05	0.42	0.42	0.12	0.29	0.33	0.06	0.23	0.23
Clearance Time (s)	3.5	4.5	4.5	3.5	4.5	4.5	3.5	4.5	3.5	3.5	4.5	4.5
Vehicle Extension (s)	2.3	4.3	4.3	2.3	4.3	4.3	2.3	2.3	2.3	2.3	2.3	2.3
Lane Grp Cap (vph)	329	1685	754	158	1489	673	438	1059	533	216	822	371
v/s Ratio Prot	c0.06	c0.43		0.03	0.27		c0.10	c0.29	0.02	0.05	0.14	
v/s Ratio Perm			0.05			0.03			0.11			0.04
v/c Ratio	0.64	0.93	0.11	0.76	0.65	0.08	0.83	0.99	0.37	0.86	0.59	0.19
Uniform Delay, d1	52.3	30.0	17.9	56.7	28.0	21.2	51.3	42.3	30.7	55.8	41.2	37.2
Progression Factor	1.00	1.00	1.00	1.00	1.00	1.00	1.00	1.00	1.00	1.00	1.00	1.00
Incremental Delay, d2	3.3	10.2	0.3	17.5	2.2	0.2	12.4	25.5	0.3	26.2	0.9	0.1
Delay (s)	55.6	40.3	18.2	74.1	30.3	21.4	63.7	67.7	30.9	82.0	42.0	37.4
Level of Service	E	D	B	E	C	C	E	E	C	F	D	D
Approach Delay (s)		40.0			33.6			62.2			50.4	
Approach LOS		D			C			E			D	

Intersection Summary			
HCM Average Control Delay	46.5	HCM Level of Service	D
HCM Volume to Capacity ratio	0.91		
Actuated Cycle Length (s)	120.0	Sum of lost time (s)	12.0
Intersection Capacity Utilization	94.2%	ICU Level of Service	F
Analysis Period (min)	15		

c Critical Lane Group

Movement	WBL	WBR	NBT	NBR	SBL	SBT
Lane Configurations						
Volume (vph)	155	235	620	225	120	210
Ideal Flow (vphpl)	1900	1900	1900	1900	1900	1900
Total Lost time (s)	4.0	4.0	4.0	4.0	4.0	4.0
Lane Util. Factor	1.00	1.00	1.00	1.00	1.00	1.00
Frt	1.00	0.85	1.00	0.85	1.00	1.00
Flt Protected	0.95	1.00	1.00	1.00	0.95	1.00
Satd. Flow (prot)	1787	1599	1881	1599	1787	1881
Flt Permitted	0.95	1.00	1.00	1.00	0.95	1.00
Satd. Flow (perm)	1787	1599	1881	1599	1787	1881
Peak-hour factor, PHF	1.00	1.00	1.00	1.00	1.00	1.00
Adj. Flow (vph)	155	235	620	225	120	210
RTOR Reduction (vph)	0	184	0	80	0	0
Lane Group Flow (vph)	155	51	620	145	120	210
Heavy Vehicles (%)	1%	1%	1%	1%	1%	1%
Turn Type		Prot		Perm	Prot	
Protected Phases	4	4	6		5	2
Permitted Phases				6		
Actuated Green, G (s)	11.2	11.2	24.0	24.0	6.8	35.8
Effective Green, g (s)	12.2	12.2	24.5	24.5	7.8	36.3
Actuated g/C Ratio	0.22	0.22	0.43	0.43	0.14	0.64
Clearance Time (s)	5.0	5.0	4.5	4.5	5.0	4.5
Vehicle Extension (s)	3.0	3.0	1.0	1.0	3.0	1.0
Lane Grp Cap (vph)	386	345	816	693	247	1209
v/s Ratio Prot	c0.09	0.03	c0.33		c0.07	0.11
v/s Ratio Perm				0.09		
v/c Ratio	0.40	0.15	0.76	0.21	0.49	0.17
Uniform Delay, d1	19.0	17.9	13.5	10.0	22.5	4.1
Progression Factor	1.00	1.00	1.00	1.00	1.00	1.00
Incremental Delay, d2	0.7	0.2	3.6	0.1	1.5	0.0
Delay (s)	19.7	18.1	17.2	10.0	24.0	4.1
Level of Service	B	B	B	B	C	A
Approach Delay (s)	18.8		15.3			11.3
Approach LOS	B		B			B

Intersection Summary			
HCM Average Control Delay	15.3	HCM Level of Service	B
HCM Volume to Capacity ratio	0.61		
Actuated Cycle Length (s)	56.5	Sum of lost time (s)	12.0
Intersection Capacity Utilization	57.9%	ICU Level of Service	B
Analysis Period (min)	15		

c Critical Lane Group

Movement	EBL	EBT	EBR	WBL	WBT	WBR	NBL	NBT	NBR	SBL	SBT	SBR
Lane Configurations												
Volume (vph)	150	25	10	15	35	425	130	425	30	120	170	75
Ideal Flow (vphpl)	1900	1900	1900	1900	1900	1900	1900	1900	1900	1900	1900	1900
Total Lost time (s)		4.0			4.0		4.0	4.0		4.0	4.0	
Lane Util. Factor		1.00			1.00		1.00	1.00		1.00	1.00	
Frt		0.99			0.88		1.00	0.99		1.00	0.95	
Flt Protected		0.96			1.00		0.95	1.00		0.95	1.00	
Satd. Flow (prot)		1751			1515		1444	1881		1752	1735	
Flt Permitted		0.43			0.99		0.47	1.00		0.32	1.00	
Satd. Flow (perm)		778			1502		717	1881		596	1735	
Peak-hour factor, PHF	1.00	1.00	1.00	1.00	1.00	1.00	1.00	1.00	1.00	1.00	1.00	1.00
Adj. Flow (vph)	150	25	10	15	35	425	130	425	30	120	170	75
RTOR Reduction (vph)	0	3	0	0	233	0	0	3	0	0	22	0
Lane Group Flow (vph)	0	182	0	0	242	0	130	452	0	120	223	0
Heavy Vehicles (%)	4%	2%	0%	0%	3%	11%	25%	0%	0%	3%	6%	1%
Turn Type	Perm			Perm			pm+pt			pm+pt		
Protected Phases		8			4		1	6		5	2	
Permitted Phases	8			4			6			2		
Actuated Green, G (s)		17.7			17.7		21.2	16.1		17.0	14.0	
Effective Green, g (s)		17.7			17.7		21.2	16.1		17.0	14.0	
Actuated g/C Ratio		0.36			0.36		0.43	0.33		0.35	0.29	
Clearance Time (s)		4.0			4.0		4.0	4.0		4.0	4.0	
Vehicle Extension (s)		2.5			2.5		2.5	2.5		2.5	2.5	
Lane Grp Cap (vph)		282			545		387	621		279	498	
v/s Ratio Prot							c0.04	c0.24		0.03	0.13	
v/s Ratio Perm		c0.23			0.16		0.11			0.12		
v/c Ratio		0.65			0.44		0.34	0.73		0.43	0.45	
Uniform Delay, d1		12.9			11.8		8.7	14.4		11.4	14.2	
Progression Factor		1.00			1.00		1.00	1.00		1.00	1.00	
Incremental Delay, d2		4.5			0.4		0.4	4.0		0.8	0.5	
Delay (s)		17.4			12.2		9.1	18.4		12.2	14.7	
Level of Service		B			B		A	B		B	B	
Approach Delay (s)		17.4			12.2			16.3			13.9	
Approach LOS		B			B			B			B	

Intersection Summary			
HCM Average Control Delay	14.7	HCM Level of Service	B
HCM Volume to Capacity ratio	0.68		
Actuated Cycle Length (s)	48.8	Sum of lost time (s)	12.0
Intersection Capacity Utilization	83.3%	ICU Level of Service	E
Analysis Period (min)	15		

c Critical Lane Group

Movement	EBL	EBT	EBR	WBL	WBT	WBR	NBL	NBT	NBR	SBL	SBT	SBR
Lane Configurations												
Volume (veh/h)	5	135	65	30	405	5	125	5	10	5	5	5
Sign Control		Free			Free			Stop			Stop	
Grade		0%			0%			0%			0%	
Peak Hour Factor	1.00	1.00	1.00	1.00	1.00	1.00	1.00	1.00	1.00	1.00	1.00	1.00
Hourly flow rate (vph)	5	135	65	30	405	5	125	5	10	5	5	5
Pedestrians												
Lane Width (ft)												
Walking Speed (ft/s)												
Percent Blockage												
Right turn flare (veh)												
Median type		None			None							
Median storage veh)												
Upstream signal (ft)												
pX, platoon unblocked												
vC, conflicting volume	410			200			650	648	168	625	678	408
vC1, stage 1 conf vol												
vC2, stage 2 conf vol												
vCu, unblocked vol	410			200			650	648	168	625	678	408
tC, single (s)	4.1			4.1			7.1	6.5	6.2	7.1	6.5	6.2
tC, 2 stage (s)												
tF (s)	2.2			2.2			3.5	4.0	3.3	3.5	4.0	3.3
p0 queue free %	100			98			66	99	99	99	99	99
cM capacity (veh/h)	1149			1378			371	379	879	381	365	644

Direction, Lane #	EB 1	EB 2	WB 1	WB 2	NB 1	SB 1
Volume Total	5	200	30	410	140	15
Volume Left	5	0	30	0	125	5
Volume Right	0	65	0	5	10	5
cSH	1149	1700	1378	1700	387	434
Volume to Capacity	0.00	0.12	0.02	0.24	0.36	0.03
Queue Length 95th (ft)	0	0	2	0	40	3
Control Delay (s)	8.1	0.0	7.7	0.0	19.5	13.6
Lane LOS	A		A		C	B
Approach Delay (s)	0.2		0.5		19.5	13.6
Approach LOS					C	B

Intersection Summary			
Average Delay	4.0		
Intersection Capacity Utilization	46.9%	ICU Level of Service	A
Analysis Period (min)	15		

Movement	EBL	EBT	EBR	WBL	WBT	WBR	NBL	NBT	NBR	SBL	SBT	SBR
Lane Configurations												
Volume (vph)	265	85	5	5	220	180	50	1205	40	175	280	240
Ideal Flow (vphpl)	1900	1900	1900	1900	1900	1900	1900	1900	1900	1900	1900	1900
Total Lost time (s)	4.0	4.0		4.0	4.0		4.0	4.0		4.0	4.0	4.0
Lane Util. Factor	1.00	1.00		1.00	1.00		1.00	0.95		1.00	0.95	1.00
Frt	1.00	0.99		1.00	0.93		1.00	1.00		1.00	1.00	0.85
Flt Protected	0.95	1.00		0.95	1.00		0.95	1.00		0.95	1.00	1.00
Satd. Flow (prot)	1787	1866		1787	1754		1787	3557		1787	3574	1599
Flt Permitted	0.13	1.00		0.70	1.00		0.58	1.00		0.08	1.00	1.00
Satd. Flow (perm)	250	1866		1314	1754		1091	3557		153	3574	1599
Peak-hour factor, PHF	1.00	1.00	1.00	1.00	1.00	1.00	1.00	1.00	1.00	1.00	1.00	1.00
Adj. Flow (vph)	265	85	5	5	220	180	50	1205	40	175	280	240
RTOR Reduction (vph)	0	2	0	0	25	0	0	2	0	0	0	136
Lane Group Flow (vph)	265	88	0	5	375	0	50	1243	0	175	280	104
Heavy Vehicles (%)	1%	1%	1%	1%	1%	1%	1%	1%	1%	1%	1%	1%
Turn Type	pm+pt			pm+pt			pm+pt			pm+pt		Perm
Protected Phases	3	8		7	4		1	6		5	2	
Permitted Phases	8			4			6			2		2
Actuated Green, G (s)	51.7	46.9		31.1	30.3		49.4	45.3		60.3	52.2	52.2
Effective Green, g (s)	51.7	46.9		31.1	30.3		49.4	45.3		60.3	52.2	52.2
Actuated g/C Ratio	0.43	0.39		0.26	0.25		0.41	0.38		0.50	0.44	0.44
Clearance Time (s)	4.0	4.0		4.0	4.0		4.0	4.0		4.0	4.0	4.0
Vehicle Extension (s)	2.5	2.5		2.5	2.5		2.5	2.5		2.5	2.5	2.5
Lane Grp Cap (vph)	331	729		344	443		473	1343		227	1555	696
v/s Ratio Prot	c0.12	0.05		0.00	0.21		0.00	c0.35		c0.07	0.08	
v/s Ratio Perm	c0.23			0.00			0.04			0.32		0.07
v/c Ratio	0.80	0.12		0.01	0.85		0.11	0.93		0.77	0.18	0.15
Uniform Delay, d1	27.8	23.4		33.0	42.6		21.4	35.7		28.9	20.8	20.5
Progression Factor	1.00	1.00		1.00	1.00		1.00	1.00		1.96	1.49	4.82
Incremental Delay, d2	12.6	0.1		0.0	13.7		0.1	12.2		11.8	0.2	0.4
Delay (s)	40.5	23.4		33.0	56.4		21.4	48.0		68.6	31.1	99.1
Level of Service	D	C		C	E		C	D		E	C	F
Approach Delay (s)		36.1			56.1			46.9			64.0	
Approach LOS		D			E			D			E	

Intersection Summary			
HCM Average Control Delay	51.2	HCM Level of Service	D
HCM Volume to Capacity ratio	0.84		
Actuated Cycle Length (s)	120.0	Sum of lost time (s)	12.0
Intersection Capacity Utilization	94.9%	ICU Level of Service	F
Analysis Period (min)	15		

c Critical Lane Group

Movement	EBL	EBT	EBR	WBL	WBT	WBR	NBL	NBT	NBR	SBL	SBT	SBR
Lane Configurations												
Volume (vph)	250	200	60	60	80	105	185	600	140	40	420	90
Ideal Flow (vphpl)	1900	1900	1900	1900	1900	1900	1900	1900	1900	1900	1900	1900
Total Lost time (s)	4.0	4.0		4.5	4.0		4.0	4.0		4.0	4.0	
Lane Util. Factor	1.00	1.00		1.00	1.00		1.00	0.95		1.00	0.95	
Frt	1.00	0.97		1.00	0.91		1.00	0.97		1.00	0.97	
Flt Protected	0.95	1.00		0.95	1.00		0.95	1.00		0.95	1.00	
Satd. Flow (prot)	1787	1816		1805	1731		1787	3508		1805	3508	
Flt Permitted	0.41	1.00		0.60	1.00		0.25	1.00		0.34	1.00	
Satd. Flow (perm)	777	1816		1137	1731		472	3508		641	3508	
Peak-hour factor, PHF	1.00	1.00	1.00	1.00	1.00	1.00	1.00	1.00	1.00	1.00	1.00	1.00
Adj. Flow (vph)	250	200	60	60	80	105	185	600	140	40	420	90
RTOR Reduction (vph)	0	10	0	0	40	0	0	19	0	0	17	0
Lane Group Flow (vph)	250	250	0	60	145	0	185	721	0	40	493	0
Heavy Vehicles (%)	1%	1%	1%	0%	1%	0%	1%	0%	0%	0%	0%	1%
Turn Type	pm+pt			pm+pt			pm+pt			pm+pt		
Protected Phases	3	8		7	4		1	6		5	2	
Permitted Phases	8			4			6			2		
Actuated Green, G (s)	27.6	19.8		16.4	12.6		28.5	21.3		18.0	14.8	
Effective Green, g (s)	27.6	19.8		15.4	12.6		28.5	21.3		18.0	14.8	
Actuated g/C Ratio	0.43	0.31		0.24	0.20		0.44	0.33		0.28	0.23	
Clearance Time (s)	4.0	4.0		4.0	4.0		4.0	4.0		4.0	4.0	
Vehicle Extension (s)	2.5	2.5		2.5	2.5		2.5	2.5		2.5	2.5	
Lane Grp Cap (vph)	508	561		308	340		409	1166		238	810	
v/s Ratio Prot	c0.08	0.14		0.01	0.08		c0.07	c0.21		0.01	0.14	
v/s Ratio Perm	c0.13			0.04			0.13			0.04		
v/c Ratio	0.49	0.45		0.19	0.43		0.45	0.62		0.17	0.61	
Uniform Delay, d1	12.4	17.8		19.1	22.6		11.8	18.0		17.0	22.1	
Progression Factor	1.00	1.00		1.00	1.00		1.00	1.00		1.00	1.00	
Incremental Delay, d2	0.5	0.4		0.2	0.6		0.6	0.8		0.2	1.1	
Delay (s)	13.0	18.2		19.4	23.2		12.3	18.8		17.2	23.2	
Level of Service	B	B		B	C		B	B		B	C	
Approach Delay (s)		15.6			22.3			17.5			22.7	
Approach LOS		B			C			B			C	

Intersection Summary			
HCM Average Control Delay	18.9	HCM Level of Service	B
HCM Volume to Capacity ratio	0.55		
Actuated Cycle Length (s)	64.1	Sum of lost time (s)	12.0
Intersection Capacity Utilization	62.6%	ICU Level of Service	B
Analysis Period (min)	15		

c Critical Lane Group

Movement	WBL	WBR	NBT	NBR	SBL	SBT
Lane Configurations						
Volume (veh/h)	30	45	540	95	10	150
Sign Control	Stop		Free			Free
Grade	0%		0%			0%
Peak Hour Factor	1.00	1.00	1.00	1.00	1.00	1.00
Hourly flow rate (vph)	30	45	540	95	10	150
Pedestrians						
Lane Width (ft)						
Walking Speed (ft/s)						
Percent Blockage						
Right turn flare (veh)						
Median type			TWLTL			None
Median storage veh)			2			
Upstream signal (ft)						
pX, platoon unblocked						
vC, conflicting volume	758	588			635	
vC1, stage 1 conf vol	588					
vC2, stage 2 conf vol	170					
vCu, unblocked vol	758	588			635	
tC, single (s)	6.4	6.2			4.1	
tC, 2 stage (s)	5.4					
tF (s)	3.5	3.3			2.2	
p0 queue free %	94	91			99	
cM capacity (veh/h)	527	511			953	

Direction, Lane #	WB 1	WB 2	NB 1	SB 1
Volume Total	30	45	635	160
Volume Left	30	0	0	10
Volume Right	0	45	95	0
cSH	527	511	1700	953
Volume to Capacity	0.06	0.09	0.37	0.01
Queue Length 95th (ft)	5	7	0	1
Control Delay (s)	12.2	12.7	0.0	0.6
Lane LOS	B	B		A
Approach Delay (s)	12.5		0.0	0.6
Approach LOS	B			

Intersection Summary			
Average Delay	1.2		
Intersection Capacity Utilization	45.0%	ICU Level of Service	A
Analysis Period (min)	15		

Movement	EBL	EBT	EBR	WBL	WBT	WBR	NBL	NBT	NBR	SBL	SBT	SBR
Lane Configurations												
Volume (vph)	65	40	25	5	160	185	35	1075	20	40	175	20
Ideal Flow (vphpl)	1900	1900	1900	1900	1900	1900	1900	1900	1900	1900	1900	1900
Total Lost time (s)	4.5	4.0		4.5	4.0		4.0	4.0		4.0	4.0	
Lane Util. Factor	1.00	1.00		1.00	1.00		1.00	0.95		1.00	0.95	
Frt	1.00	0.94		1.00	0.92		1.00	1.00		1.00	0.98	
Flt Protected	0.95	1.00		0.95	1.00		0.95	1.00		0.95	1.00	
Satd. Flow (prot)	1787	1773		1787	1730		1787	3564		1787	3519	
Flt Permitted	0.38	1.00		0.71	1.00		0.63	1.00		0.19	1.00	
Satd. Flow (perm)	724	1773		1344	1730		1184	3564		350	3519	
Peak-hour factor, PHF	1.00	1.00	1.00	1.00	1.00	1.00	1.00	1.00	1.00	1.00	1.00	1.00
Adj. Flow (vph)	65	40	25	5	160	185	35	1075	20	40	175	20
RTOR Reduction (vph)	0	19	0	0	88	0	0	2	0	0	11	0
Lane Group Flow (vph)	65	46	0	5	257	0	35	1093	0	40	184	0
Heavy Vehicles (%)	1%	1%	1%	1%	1%	1%	1%	1%	1%	1%	1%	1%
Turn Type	Perm			Perm			pm+pt			pm+pt		
Protected Phases		8			4		1	6		5	2	
Permitted Phases	8			4			6			2		
Actuated Green, G (s)	10.9	10.9		10.9	10.9		22.8	21.5		22.8	21.5	
Effective Green, g (s)	10.4	10.9		10.4	10.9		22.8	21.5		22.8	21.5	
Actuated g/C Ratio	0.23	0.24		0.23	0.24		0.50	0.47		0.50	0.47	
Clearance Time (s)	4.0	4.0		4.0	4.0		4.0	4.0		4.0	4.0	
Vehicle Extension (s)	2.5	2.5		2.5	2.5		2.5	2.5		2.5	2.5	
Lane Grp Cap (vph)	165	423		306	413		608	1677		215	1656	
v/s Ratio Prot		0.03			c0.15		0.00	c0.31		c0.01	0.05	
v/s Ratio Perm	0.09			0.00			0.03			0.09		
v/c Ratio	0.39	0.11		0.02	0.62		0.06	0.65		0.19	0.11	
Uniform Delay, d1	15.0	13.6		13.7	15.6		5.9	9.2		6.5	6.8	
Progression Factor	1.00	1.00		1.00	1.00		1.00	1.00		1.00	1.00	
Incremental Delay, d2	1.1	0.1		0.0	2.5		0.0	2.0		0.3	0.1	
Delay (s)	16.1	13.7		13.7	18.1		5.9	11.2		6.8	6.9	
Level of Service	B	B		B	B		A	B		A	A	
Approach Delay (s)		14.9			18.0			11.1			6.9	
Approach LOS		B			B			B			A	

Intersection Summary			
HCM Average Control Delay	12.1	HCM Level of Service	B
HCM Volume to Capacity ratio	0.62		
Actuated Cycle Length (s)	45.7	Sum of lost time (s)	12.0
Intersection Capacity Utilization	66.6%	ICU Level of Service	C
Analysis Period (min)	15		

c Critical Lane Group

Movement	EBL	EBT	EBR	WBL	WBT	WBR	NBL	NBT	NBR	SBL	SBT	SBR
Lane Configurations												
Volume (vph)	200	50	40	70	135	135	185	575	165	35	470	50
Ideal Flow (vphpl)	1900	1900	1900	1900	1900	1900	1900	1900	1900	1900	1900	1900
Total Lost time (s)	4.0	4.0		4.0	4.0		4.0	4.0		4.0	4.0	
Lane Util. Factor	1.00	1.00		1.00	1.00		1.00	0.95		1.00	0.95	
Frt	1.00	0.93		1.00	0.93		1.00	0.97		1.00	0.99	
Flt Protected	0.95	1.00		0.95	1.00		0.95	1.00		0.95	1.00	
Satd. Flow (prot)	1787	1756		1805	1749		1787	3489		1805	3555	
Flt Permitted	0.53	1.00		0.70	1.00		0.30	1.00		0.37	1.00	
Satd. Flow (perm)	1004	1756		1327	1749		556	3489		704	3555	
Peak-hour factor, PHF	1.00	1.00	1.00	1.00	1.00	1.00	1.00	1.00	1.00	1.00	1.00	1.00
Adj. Flow (vph)	200	50	40	70	135	135	185	575	165	35	470	50
RTOR Reduction (vph)	0	27	0	0	52	0	0	32	0	0	10	0
Lane Group Flow (vph)	200	63	0	70	218	0	185	708	0	35	510	0
Heavy Vehicles (%)	1%	1%	1%	0%	1%	0%	1%	0%	0%	0%	0%	1%
Turn Type	Perm			Perm			pm+pt			pm+pt		
Protected Phases		8			4		1	6		5	2	
Permitted Phases	8			4			6			2		
Actuated Green, G (s)	15.4	15.4		15.4	15.4		23.4	18.2		14.2	13.0	
Effective Green, g (s)	15.4	15.4		15.4	15.4		23.4	18.2		14.2	13.0	
Actuated g/C Ratio	0.33	0.33		0.33	0.33		0.50	0.39		0.30	0.28	
Clearance Time (s)	4.0	4.0		4.0	4.0		4.0	4.0		4.0	4.0	
Vehicle Extension (s)	2.5	2.5		2.5	2.5		2.5	2.5		2.5	2.5	
Lane Grp Cap (vph)	330	578		437	576		446	1357		242	988	
v/s Ratio Prot		0.04			0.12		c0.06	c0.20		0.00	0.14	
v/s Ratio Perm	c0.20			0.05			0.15			0.04		
v/c Ratio	0.61	0.11		0.16	0.38		0.41	0.52		0.14	0.52	
Uniform Delay, d1	13.2	10.9		11.1	12.0		7.0	11.0		11.6	14.2	
Progression Factor	1.00	1.00		1.00	1.00		1.00	1.00		1.00	1.00	
Incremental Delay, d2	2.6	0.1		0.1	0.3		0.5	0.3		0.2	0.3	
Delay (s)	15.8	11.0		11.2	12.3		7.5	11.2		11.8	14.6	
Level of Service	B	B		B	B		A	B		B	B	
Approach Delay (s)		14.3			12.1			10.5			14.4	
Approach LOS		B			B			B			B	

Intersection Summary			
HCM Average Control Delay	12.3	HCM Level of Service	B
HCM Volume to Capacity ratio	0.52		
Actuated Cycle Length (s)	46.8	Sum of lost time (s)	8.0
Intersection Capacity Utilization	64.6%	ICU Level of Service	C
Analysis Period (min)	15		

c Critical Lane Group

Movement	EBL	EBT	EBR	WBL	WBT	WBR	NBL	NBT	NBR	SBL	SBT	SBR
Lane Configurations												
Volume (vph)	190	90	5	5	140	245	10	500	5	70	55	110
Ideal Flow (vphpl)	1900	1900	1900	1900	1900	1900	1900	1900	1900	1900	1900	1900
Total Lost time (s)		4.0			4.0		4.0	4.0		4.0	4.0	
Lane Util. Factor		1.00			1.00		1.00	0.95		1.00	0.95	
Frt		1.00			0.92		1.00	1.00		1.00	0.90	
Flt Protected		0.97			1.00		0.95	1.00		0.95	1.00	
Satd. Flow (prot)		1816			1721		1787	3569		1787	3217	
Flt Permitted		0.56			1.00		0.65	1.00		0.35	1.00	
Satd. Flow (perm)		1056			1715		1218	3569		651	3217	
Peak-hour factor, PHF	1.00	1.00	1.00	1.00	1.00	1.00	1.00	1.00	1.00	1.00	1.00	1.00
Adj. Flow (vph)	190	90	5	5	140	245	10	500	5	70	55	110
RTOR Reduction (vph)	0	1	0	0	85	0	0	1	0	0	76	0
Lane Group Flow (vph)	0	284	0	0	305	0	10	504	0	70	89	0
Heavy Vehicles (%)	1%	1%	1%	1%	1%	1%	1%	1%	1%	1%	1%	1%
Turn Type	Perm			Perm			pm+pt			pm+pt		
Protected Phases		8			4		1	6		5	2	
Permitted Phases	8			4			6			2		
Actuated Green, G (s)		18.4			18.4		12.5	12.0		16.3	13.9	
Effective Green, g (s)		18.4			18.4		12.5	12.0		16.3	13.9	
Actuated g/C Ratio		0.41			0.41		0.28	0.27		0.36	0.31	
Clearance Time (s)		4.0			4.0		4.0	4.0		4.0	4.0	
Vehicle Extension (s)		2.5			2.5		2.5	2.5		2.5	2.5	
Lane Grp Cap (vph)		434			704		346	956		298	998	
v/s Ratio Prot							0.00	c0.14		c0.01	0.03	
v/s Ratio Perm		c0.27			0.18		0.01			0.07		
v/c Ratio		0.65			0.43		0.03	0.53		0.23	0.09	
Uniform Delay, d1		10.6			9.5		11.7	14.0		9.6	11.0	
Progression Factor		1.00			1.00		1.00	1.00		1.00	1.00	
Incremental Delay, d2		3.1			0.3		0.0	0.4		0.3	0.0	
Delay (s)		13.8			9.8		11.7	14.4		9.9	11.0	
Level of Service		B			A		B	B		A	B	
Approach Delay (s)		13.8			9.8			14.3			10.7	
Approach LOS		B			A			B			B	

Intersection Summary			
HCM Average Control Delay	12.4	HCM Level of Service	B
HCM Volume to Capacity ratio	0.66		
Actuated Cycle Length (s)	44.8	Sum of lost time (s)	16.0
Intersection Capacity Utilization	69.4%	ICU Level of Service	C
Analysis Period (min)	15		

c Critical Lane Group

Movement	EBL	EBT	EBR	WBL	WBT	WBR	NBL	NBT	NBR	SBL	SBT	SBR
Lane Configurations												
Volume (vph)	170	175	60	45	75	80	70	570	15	25	430	80
Ideal Flow (vphpl)	1900	1900	1900	1900	1900	1900	1900	1900	1900	1900	1900	1900
Total Lost time (s)		4.5			4.5		4.5	4.5		4.5	4.5	
Lane Util. Factor		1.00			1.00		1.00	0.95		1.00	0.95	
Frt		0.98			0.95		1.00	1.00		1.00	0.98	
Flt Protected		0.98			0.99		0.95	1.00		0.95	1.00	
Satd. Flow (prot)		1806			1760		1787	3561		1787	3490	
Flt Permitted		0.80			0.87		0.34	1.00		0.43	1.00	
Satd. Flow (perm)		1479			1547		637	3561		812	3490	
Peak-hour factor, PHF	1.00	1.00	1.00	1.00	1.00	1.00	1.00	1.00	1.00	1.00	1.00	1.00
Adj. Flow (vph)	170	175	60	45	75	80	70	570	15	25	430	80
RTOR Reduction (vph)	0	10	0	0	38	0	0	3	0	0	22	0
Lane Group Flow (vph)	0	395	0	0	162	0	70	582	0	25	488	0
Heavy Vehicles (%)	1%	1%	1%	1%	1%	1%	1%	1%	1%	1%	1%	1%
Turn Type	Perm			Perm			pm+pt			pm+pt		
Protected Phases		8			4		1	6		5	2	
Permitted Phases	8			4			6			2		
Actuated Green, G (s)		17.6			17.6		17.0	14.1		12.2	11.7	
Effective Green, g (s)		17.1			17.1		16.0	13.6		11.2	11.2	
Actuated g/C Ratio		0.39			0.39		0.36	0.31		0.25	0.25	
Clearance Time (s)		4.0			4.0		4.0	4.0		4.0	4.0	
Vehicle Extension (s)		2.5			2.5		2.5	2.5		2.5	2.5	
Lane Grp Cap (vph)		572			599		293	1096		206	884	
v/s Ratio Prot							c0.01	c0.16			0.14	
v/s Ratio Perm		c0.27			0.10		0.07			0.03		
v/c Ratio		0.69			0.27		0.24	0.53		0.12	0.55	
Uniform Delay, d1		11.3			9.3		9.5	12.7		12.7	14.3	
Progression Factor		1.00			1.00		1.00	1.00		1.00	1.00	
Incremental Delay, d2		3.3			0.2		0.3	0.4		0.2	0.6	
Delay (s)		14.6			9.5		9.8	13.0		12.9	14.9	
Level of Service		B			A		A	B		B	B	
Approach Delay (s)		14.6			9.5			12.7			14.8	
Approach LOS		B			A			B			B	

Intersection Summary			
HCM Average Control Delay	13.4	HCM Level of Service	B
HCM Volume to Capacity ratio	0.64		
Actuated Cycle Length (s)	44.2	Sum of lost time (s)	13.5
Intersection Capacity Utilization	68.2%	ICU Level of Service	C
Analysis Period (min)	15		

c Critical Lane Group

Movement	EBL	EBT	WBT	WBR	SBL	SBR
Lane Configurations						
Volume (veh/h)	40	130	315	105	25	110
Sign Control		Free	Free		Stop	
Grade		0%	0%		0%	
Peak Hour Factor	1.00	1.00	1.00	1.00	1.00	1.00
Hourly flow rate (vph)	40	130	315	105	25	110
Pedestrians						
Lane Width (ft)						
Walking Speed (ft/s)						
Percent Blockage						
Right turn flare (veh)						
Median type		None	None			
Median storage veh)						
Upstream signal (ft)						
pX, platoon unblocked						
vC, conflicting volume	420				578	368
vC1, stage 1 conf vol						
vC2, stage 2 conf vol						
vCu, unblocked vol	420				578	368
tC, single (s)	4.1				6.4	6.2
tC, 2 stage (s)						
tF (s)	2.2				3.5	3.3
p0 queue free %	97				95	84
cM capacity (veh/h)	1150				465	682

Direction, Lane #	EB 1	EB 2	WB 1	SB 1
Volume Total	40	130	420	135
Volume Left	40	0	0	25
Volume Right	0	0	105	110
cSH	1150	1700	1700	628
Volume to Capacity	0.03	0.08	0.25	0.21
Queue Length 95th (ft)	3	0	0	20
Control Delay (s)	8.2	0.0	0.0	12.3
Lane LOS	A			B
Approach Delay (s)	1.9		0.0	12.3
Approach LOS				B

Intersection Summary			
Average Delay	2.7		
Intersection Capacity Utilization	45.7%	ICU Level of Service	A
Analysis Period (min)	15		

Movement	EBL	EBT	EBR	WBL	WBT	WBR	NBL	NBT	NBR	SBL	SBT	SBR
Lane Configurations												
Volume (vph)	25	10	220	50	15	15	420	665	5	15	485	65
Ideal Flow (vphpl)	1900	1900	1900	1900	1900	1900	1900	1900	1900	1900	1900	1900
Total Lost time (s)		4.0	4.0		4.0		4.0	4.0		4.0	4.0	
Lane Util. Factor		1.00	1.00		1.00		1.00	0.95		1.00	0.95	
Frt		1.00	0.85		0.97		1.00	1.00		1.00	0.98	
Flt Protected		0.97	1.00		0.97		0.95	1.00		0.95	1.00	
Satd. Flow (prot)		1834	1615		1796		1805	3606		1805	3546	
Flt Permitted		0.77	1.00		0.79		0.40	1.00		0.40	1.00	
Satd. Flow (perm)		1461	1615		1461		752	3606		754	3546	
Peak-hour factor, PHF	1.00	1.00	1.00	1.00	1.00	1.00	1.00	1.00	1.00	1.00	1.00	1.00
Adj. Flow (vph)	25	10	220	50	15	15	420	665	5	15	485	65
RTOR Reduction (vph)	0	0	95	0	10	0	0	0	0	0	6	0
Lane Group Flow (vph)	0	35	125	0	70	0	420	670	0	15	544	0
Heavy Vehicles (%)	0%	0%	0%	0%	0%	0%	0%	0%	0%	0%	0%	0%
Turn Type	Perm		pm+ov	Perm			pm+pt			pm+pt		
Protected Phases		8	1		4		1	6		5	2	
Permitted Phases	8		8	4			6			2		
Actuated Green, G (s)		8.4	26.7		8.4		83.6	77.5		63.4	61.3	
Effective Green, g (s)		8.4	26.7		8.4		83.6	77.5		63.4	61.3	
Actuated g/C Ratio		0.08	0.27		0.08		0.84	0.78		0.63	0.61	
Clearance Time (s)		4.0	4.0		4.0		4.0	4.0		4.0	4.0	
Vehicle Extension (s)		2.5	2.5		2.5		2.5	2.5		2.5	2.5	
Lane Grp Cap (vph)		123	496		123		821	2795		500	2174	
v/s Ratio Prot			0.05				c0.09	0.19		0.00	0.15	
v/s Ratio Perm		0.02	0.03		c0.05		c0.33			0.02		
v/c Ratio		0.28	0.25		0.57		0.51	0.24		0.03	0.25	
Uniform Delay, d1		43.0	28.8		44.1		2.3	3.1		6.8	8.8	
Progression Factor		1.00	1.00		1.00		1.00	1.00		1.00	1.00	
Incremental Delay, d2		0.9	0.2		4.8		0.4	0.2		0.0	0.3	
Delay (s)		43.9	29.0		48.9		2.7	3.3		6.9	9.1	
Level of Service		D	C		D		A	A		A	A	
Approach Delay (s)		31.1			48.9			3.1			9.1	
Approach LOS		C			D			A			A	

Intersection Summary			
HCM Average Control Delay	10.2	HCM Level of Service	B
HCM Volume to Capacity ratio	0.51		
Actuated Cycle Length (s)	100.0	Sum of lost time (s)	8.0
Intersection Capacity Utilization	59.9%	ICU Level of Service	B
Analysis Period (min)	15		

c Critical Lane Group

Movement	EBL	EBT	EBR	WBL	WBT	WBR	NBL	NBT	NBR	SBL	SBT	SBR
Lane Configurations												
Volume (vph)	250	415	25	40	310	350	25	445	155	390	220	145
Ideal Flow (vphpl)	1900	1900	1900	1900	1900	1900	1900	1900	1900	1900	1900	1900
Total Lost time (s)	4.0	4.0		4.0	4.0	4.0	4.0	4.0		4.0	4.0	6.5
Lane Util. Factor	1.00	1.00		1.00	1.00	1.00	1.00	1.00		0.97	1.00	1.00
Frt	1.00	0.99		1.00	1.00	0.85	1.00	0.96		1.00	1.00	0.85
Flt Protected	0.95	1.00		0.95	1.00	1.00	0.95	1.00		0.95	1.00	1.00
Satd. Flow (prot)	1805	1884		1805	1900	1615	1805	1826		3502	1900	1615
Flt Permitted	0.95	1.00		0.95	1.00	1.00	0.95	1.00		0.95	1.00	1.00
Satd. Flow (perm)	1805	1884		1805	1900	1615	1805	1826		3502	1900	1615
Peak-hour factor, PHF	1.00	1.00	1.00	1.00	1.00	1.00	1.00	1.00	1.00	1.00	1.00	1.00
Adj. Flow (vph)	250	415	25	40	310	350	25	445	155	390	220	145
RTOR Reduction (vph)	0	2	0	0	0	232	0	12	0	0	0	83
Lane Group Flow (vph)	250	438	0	40	310	118	25	588	0	390	220	62
Heavy Vehicles (%)	0%	0%	0%	0%	0%	0%	0%	0%	0%	0%	0%	0%
Turn Type	Prot			Prot		Perm	Prot			Prot		Perm
Protected Phases	5	2		1	6		3	8		7	4	
Permitted Phases						6						4
Actuated Green, G (s)	13.7	29.7		2.9	18.9	18.9	1.9	35.3		11.0	44.4	44.4
Effective Green, g (s)	15.7	31.7		4.9	20.9	20.9	3.9	37.3		13.0	46.4	43.9
Actuated g/C Ratio	0.15	0.31		0.05	0.20	0.20	0.04	0.36		0.13	0.45	0.43
Clearance Time (s)	6.0	6.0		6.0	6.0	6.0	6.0	6.0		6.0	6.0	6.0
Vehicle Extension (s)	2.4	2.7		2.7	2.7	2.7	2.6	2.5		2.6	2.5	2.5
Lane Grp Cap (vph)	275	580		86	386	328	68	662		442	857	689
v/s Ratio Prot	c0.14	c0.23		0.02	0.16		0.01	c0.32		c0.11	0.12	
v/s Ratio Perm						0.07						0.04
v/c Ratio	0.91	0.76		0.47	0.80	0.36	0.37	0.89		0.88	0.26	0.09
Uniform Delay, d1	42.9	32.1		47.7	39.0	35.3	48.3	30.8		44.2	17.5	17.6
Progression Factor	1.00	1.00		1.00	1.00	1.00	1.00	1.00		1.00	1.00	1.00
Incremental Delay, d2	31.1	5.4		3.3	11.3	0.6	2.6	13.6		18.3	0.1	0.0
Delay (s)	74.0	37.5		51.0	50.3	35.8	50.9	44.5		62.5	17.7	17.6
Level of Service	E	D		D	D	D	D	D		E	B	B
Approach Delay (s)		50.7			43.1			44.7			40.8	
Approach LOS		D			D			D			D	

Intersection Summary			
HCM Average Control Delay	44.7	HCM Level of Service	D
HCM Volume to Capacity ratio	0.84		
Actuated Cycle Length (s)	102.9	Sum of lost time (s)	12.0
Intersection Capacity Utilization	87.5%	ICU Level of Service	E
Analysis Period (min)	15		

c Critical Lane Group

Movement	EBL	EBT	EBR	WBL	WBT	WBR	NBL	NBT	NBR	SBL	SBT	SBR
Lane Configurations												
Volume (vph)	205	915	5	5	530	250	5	5	5	325	5	95
Ideal Flow (vphpl)	1900	1900	1900	1900	1900	1900	1900	1900	1900	1900	1900	1900
Total Lost time (s)	4.0	4.0		4.0	4.0			4.0			4.0	4.0
Lane Util. Factor	1.00	0.95		1.00	0.95			1.00			1.00	1.00
Frt	1.00	1.00		1.00	0.95			0.95			1.00	0.85
Flt Protected	0.95	1.00		0.95	1.00			0.98			0.95	1.00
Satd. Flow (prot)	1805	3607		1805	3436			1785			1811	1615
Flt Permitted	0.95	1.00		0.95	1.00			1.00			0.95	1.00
Satd. Flow (perm)	1805	3607		1805	3436			1814			1811	1615
Peak-hour factor, PHF	1.00	1.00	1.00	1.00	1.00	1.00	1.00	1.00	1.00	1.00	1.00	1.00
Adj. Flow (vph)	205	915	5	5	530	250	5	5	5	325	5	95
RTOR Reduction (vph)	0	1	0	0	61	0	0	5	0	0	0	72
Lane Group Flow (vph)	205	920	0	5	719	0	0	10	0	0	330	23
Heavy Vehicles (%)	0%	0%	0%	0%	0%	0%	0%	0%	0%	0%	0%	0%
Turn Type	Prot			Prot			Perm			Split		Perm
Protected Phases	5	2		1	6			8		4	4	
Permitted Phases							8					4
Actuated Green, G (s)	12.0	36.3		0.8	24.1			0.8			16.7	16.7
Effective Green, g (s)	14.0	38.3		1.8	26.1			1.8			18.7	18.7
Actuated g/C Ratio	0.18	0.50		0.02	0.34			0.02			0.24	0.24
Clearance Time (s)	6.0	6.0		5.0	6.0			5.0			6.0	6.0
Vehicle Extension (s)	2.4	2.7		2.4	2.7			2.5			2.5	2.5
Lane Grp Cap (vph)	330	1804		42	1171			43			442	394
v/s Ratio Prot	c0.11	0.25		0.00	c0.21						c0.18	
v/s Ratio Perm								c0.01				0.01
v/c Ratio	0.62	0.51		0.12	0.61			0.24			0.75	0.06
Uniform Delay, d1	28.9	12.8		36.6	21.0			36.7			26.8	22.2
Progression Factor	1.00	1.00		1.00	1.00			1.00			1.00	1.00
Incremental Delay, d2	3.0	0.2		0.8	0.9			2.0			6.4	0.0
Delay (s)	31.9	13.0		37.5	21.9			38.8			33.2	22.2
Level of Service	C	B		D	C			D			C	C
Approach Delay (s)		16.5			22.0			38.8			30.7	
Approach LOS		B			C			D			C	

Intersection Summary			
HCM Average Control Delay	21.0	HCM Level of Service	C
HCM Volume to Capacity ratio	0.65		
Actuated Cycle Length (s)	76.6	Sum of lost time (s)	16.0
Intersection Capacity Utilization	68.9%	ICU Level of Service	C
Analysis Period (min)	15		

c Critical Lane Group

Movement	EBL	EBT	EBR	WBL	WBT	WBR	NBL	NBT	NBR	SBL	SBT	SBR
Lane Configurations												
Volume (vph)	380	1130	150	45	465	115	205	700	330	130	225	150
Ideal Flow (vphpl)	1900	1900	1900	1900	1900	1900	1900	1900	1900	1900	1900	1900
Total Lost time (s)	4.0	4.0		4.0	4.0		4.0	4.0		4.0	4.0	
Lane Util. Factor	1.00	0.95		1.00	0.95		1.00	0.95		1.00	0.95	
Frt	1.00	0.98		1.00	0.97		1.00	0.95		1.00	0.94	
Flt Protected	0.95	1.00		0.95	1.00		0.95	1.00		0.95	1.00	
Satd. Flow (prot)	1805	3547		1805	3503		1805	3437		1805	3393	
Flt Permitted	0.95	1.00		0.95	1.00		0.37	1.00		0.14	1.00	
Satd. Flow (perm)	1805	3547		1805	3503		694	3437		272	3393	
Peak-hour factor, PHF	1.00	1.00	1.00	1.00	1.00	1.00	1.00	1.00	1.00	1.00	1.00	1.00
Adj. Flow (vph)	380	1130	150	45	465	115	205	700	330	130	225	150
RTOR Reduction (vph)	0	9	0	0	19	0	0	47	0	0	94	0
Lane Group Flow (vph)	380	1271	0	45	561	0	205	983	0	130	281	0
Heavy Vehicles (%)	0%	0%	0%	0%	0%	0%	0%	0%	0%	0%	0%	0%
Turn Type	Prot			Prot			pm+pt			pm+pt		
Protected Phases	5	2		1	6		3	8		7	4	
Permitted Phases							8			4		
Actuated Green, G (s)	25.9	44.3		5.5	23.9		44.7	33.5		34.1	27.4	
Effective Green, g (s)	26.4	44.8		6.0	24.4		45.2	34.0		35.1	27.9	
Actuated g/C Ratio	0.24	0.41		0.06	0.23		0.42	0.31		0.33	0.26	
Clearance Time (s)	4.5	4.5		4.5	4.5		4.5	4.5		4.5	4.5	
Vehicle Extension (s)	3.0	1.0		3.0	1.0		3.0	1.0		3.0	1.0	
Lane Grp Cap (vph)	441	1471		100	791		427	1082		191	877	
v/s Ratio Prot	c0.21	c0.36		0.02	0.16		0.06	c0.29		c0.05	0.08	
v/s Ratio Perm							0.14			0.18		
v/c Ratio	0.86	0.86		0.45	0.71		0.48	0.91		0.68	0.32	
Uniform Delay, d1	39.1	28.8		49.4	38.5		21.2	35.5		29.0	32.4	
Progression Factor	1.00	1.00		1.00	1.00		1.00	1.00		1.00	1.00	
Incremental Delay, d2	15.7	5.4		3.2	2.4		0.9	10.7		9.6	0.1	
Delay (s)	54.8	34.2		52.6	40.9		22.0	46.2		38.5	32.5	
Level of Service	D	C		D	D		C	D		D	C	
Approach Delay (s)		38.9			41.8			42.2			34.0	
Approach LOS		D			D			D			C	

Intersection Summary			
HCM Average Control Delay	39.7	HCM Level of Service	D
HCM Volume to Capacity ratio	0.85		
Actuated Cycle Length (s)	108.0	Sum of lost time (s)	12.0
Intersection Capacity Utilization	89.8%	ICU Level of Service	E
Analysis Period (min)	15		

c Critical Lane Group

Movement	EBL	EBT	EBR	WBL	WBT	WBR	NBL	NBT	NBR	SBL	SBT	SBR
Lane Configurations												
Volume (vph)	235	195	150	50	60	300	160	590	20	280	140	135
Ideal Flow (vphpl)	1900	1900	1900	1900	1900	1900	1900	1900	1900	1900	1900	1900
Total Lost time (s)	4.5	4.5		4.5	4.5		4.5	4.5		4.5	4.5	4.5
Lane Util. Factor	1.00	1.00		1.00	1.00		1.00	1.00		1.00	1.00	1.00
Frt	1.00	0.93		1.00	0.88		1.00	1.00		1.00	1.00	0.85
Flt Protected	0.95	1.00		0.95	1.00		0.95	1.00		0.95	1.00	1.00
Satd. Flow (prot)	1770	1741		1770	1630		1770	1854		1770	1863	1583
Flt Permitted	0.19	1.00		0.49	1.00		0.67	1.00		0.10	1.00	1.00
Satd. Flow (perm)	348	1741		905	1630		1244	1854		186	1863	1583
Peak-hour factor, PHF	1.00	1.00	1.00	1.00	1.00	1.00	1.00	1.00	1.00	1.00	1.00	1.00
Adj. Flow (vph)	235	195	150	50	60	300	160	590	20	280	140	135
RTOR Reduction (vph)	0	22	0	0	152	0	0	1	0	0	0	74
Lane Group Flow (vph)	235	323	0	50	208	0	160	609	0	280	140	61
Turn Type	pm+pt			pm+pt			pm+pt			pm+pt		Perm
Protected Phases	3	8		7	4		1	6		5	2	
Permitted Phases	8			4			6			2		2
Actuated Green, G (s)	34.9	27.9		20.4	17.4		43.1	36.0		56.5	45.4	45.4
Effective Green, g (s)	34.4	27.4		19.4	16.9		42.1	35.5		56.0	44.9	44.9
Actuated g/C Ratio	0.35	0.28		0.20	0.17		0.42	0.36		0.56	0.45	0.45
Clearance Time (s)	4.0	4.0		4.0	4.0		4.0	4.0		4.0	4.0	4.0
Vehicle Extension (s)	2.5	2.5		2.5	2.5		2.5	2.5		2.5	2.5	2.5
Lane Grp Cap (vph)	306	480		198	277		562	662		360	842	715
v/s Ratio Prot	c0.10	0.19		0.01	0.13		0.02	c0.33		c0.13	0.08	
v/s Ratio Perm	c0.17			0.04			0.10			0.31		0.04
v/c Ratio	0.77	0.67		0.25	0.75		0.28	0.92		0.78	0.17	0.09
Uniform Delay, d1	26.2	32.0		33.2	39.3		18.2	30.6		25.4	16.2	15.5
Progression Factor	1.00	1.00		1.00	1.00		1.00	1.00		1.00	1.00	1.00
Incremental Delay, d2	10.5	3.4		0.5	10.4		0.2	17.8		9.8	0.1	0.0
Delay (s)	36.8	35.4		33.6	49.7		18.4	48.4		35.2	16.2	15.6
Level of Service	D	D		C	D		B	D		D	B	B
Approach Delay (s)		35.9			47.7			42.2			25.6	
Approach LOS		D			D			D			C	

Intersection Summary			
HCM Average Control Delay	37.6	HCM Level of Service	D
HCM Volume to Capacity ratio	0.82		
Actuated Cycle Length (s)	99.4	Sum of lost time (s)	13.5
Intersection Capacity Utilization	97.4%	ICU Level of Service	F
Analysis Period (min)	15		
c Critical Lane Group			

General & Site Information

Analyst:	CMG
Agency/Company:	David Evans and Associates, Inc.
Date:	7/16/2012
Project Name:	South Hillsboro Focus Area Plan
Intersection:	Alexander at Brookwood
Analysis Time Period:	AM Peak Hour
Jurisdiction:	City of Hillsboro
Year:	2035 with South Hillsboro

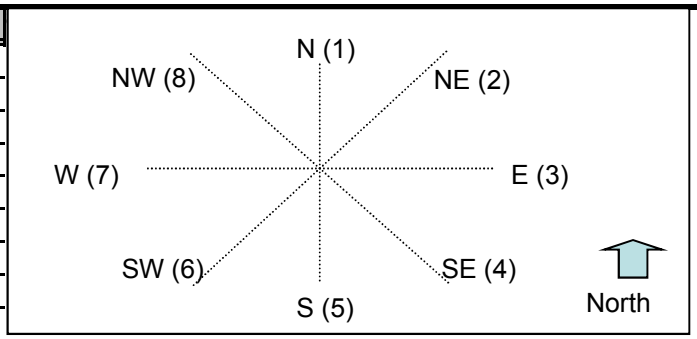

Volumes		Roundabout Approach/Entry Legs							
		N (1)	NE (2)	E (3)	SE (4)	S (5)	SW (6)	W (7)	NW (8)
Input Volumes to Leg #	N (1), vph	185		225		345		210	
	NE (2), vph								
	E (3), vph	110				45		95	
	SE (4), vph								
	S (5), vph	200		10				5	
	SW (6), vph								
	W (7), vph	35		25		5			
	NW (8), vph								
Output	Total Vehicles	530	0	260	0	395	0	310	0

Volume Characteristics	N	NE	E	SE	S	SW	W	NW
% Trucks	0.0	0.0	0.0	0.0	0.0	0.0	0.0	0.0
E_t	2.0	2.0	2.0	2.0	2.0	2.0	2.0	2.0
PHF	1.00	1.00	1.00	1.00	1.00	1.00	1.00	1.00
F_{HV}	1.000	1.000	1.000	1.000	1.000	1.000	1.000	1.000

Entry/Conflicting Flows	N	NE	E	SE	S	SW	W	NW
Flow to Leg # N (1), pcu/h	185	0	225	0	345	0	210	0
NE (2), pcu/h	0	0	0	0	0	0	0	0
E (3), pcu/h	110	0	0	0	45	0	95	0
SE (4), pcu/h	0	0	0	0	0	0	0	0
S (5), pcu/h	200	0	10	0	0	0	5	0
SW (6), pcu/h	0	0	0	0	0	0	0	0
W (7), pcu/h	35	0	25	0	5	0	0	0
NW (8), pcu/h	0	0	0	0	0	0	0	0
Entry flow, pcu/h	530	0	260	0	395	0	310	0
Conflicting flow, pcu/h	40	1005	745	995	600	815	505	570

Results	N	NE	E	SE	S	SW	W	NW
Entry Capacity, pcu/h	1086	NA	536	NA	620	NA	682	NA
Leg v/c ratio	0.49		0.48		0.64		0.45	
Control Delay, s/pcu	6.4		12.9		15.4		9.6	
LOS	A		B		C		A	
95th Percentile Queue (ft)	817	0	401	0	609	0	478	0

General & Site Information	
Analyst:	CMG
Agency/Company:	David Evans and Associates, Inc.
Date:	7/16/2012
Project Name:	South Hillsboro Focus Area Plan
Intersection:	Rosa at 229th
Analysis Time Period:	AM Peak Hour
Jurisdiction:	City of Hillsboro
Year:	2035 with SoHi

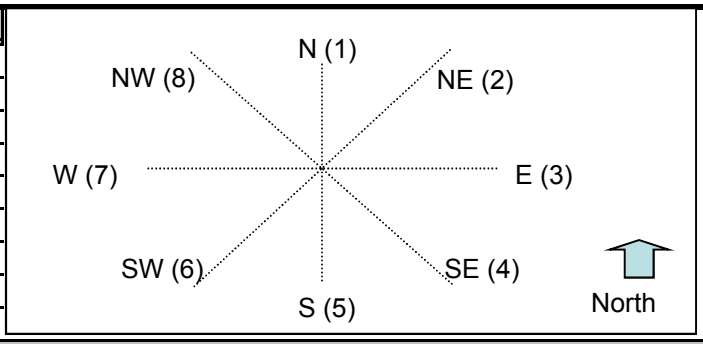

Volumes		Roundabout Approach/Entry Legs							
		N (1)	NE (2)	E (3)	SE (4)	S (5)	SW (6)	W (7)	NW (8)
Input Volumes to Leg #	N (1), vph			275		105			
	NE (2), vph								
	E (3), vph	75				35			
	SE (4), vph								
	S (5), vph	45		10					
	SW (6), vph								
	W (7), vph								
	NW (8), vph								
Output	Total Vehicles	120	0	285	0	140	0	0	0

Volume Characteristics	N	NE	E	SE	S	SW	W	NW
% Trucks	1.0	1.0	1.0	1.0	1.0	1.0	1.0	1.0
E_t	2.0	2.0	2.0	2.0	2.0	2.0	2.0	2.0
PHF	1.00	1.00	1.00	1.00	1.00	1.00	1.00	1.00
F_{HV}	0.990	0.990	0.990	0.990	0.990	0.990	0.990	0.990

Entry/Conflicting Flows	N	NE	E	SE	S	SW	W	NW
Flow to Leg # N (1), pcu/h	0	0	278	0	106	0	0	0
NE (2), pcu/h	0	0	0	0	0	0	0	0
E (3), pcu/h	76	0	0	0	35	0	0	0
SE (4), pcu/h	0	0	0	0	0	0	0	0
S (5), pcu/h	45	0	10	0	0	0	0	0
SW (6), pcu/h	0	0	0	0	0	0	0	0
W (7), pcu/h	0	0	0	0	0	0	0	0
NW (8), pcu/h	0	0	0	0	0	0	0	0
Entry flow, pcu/h	121	0	288	0	141	0	0	0
Conflicting flow, pcu/h	10	394	106	217	76	131	131	131

Results	N	NE	E	SE	S	SW	W	NW
Entry Capacity, pcu/h	1119	NA	1016	NA	1048	NA	NA	NA
Leg v/c ratio	0.11		0.28		0.13			
Control Delay, s/pcu	3.6		4.9		4.0			
LOS	A		A		A			
95th Percentile Queue (ft)	188	0	446	0	219	0	0	0

General & Site Information

Analyst:	CMG
Agency/Company:	David Evans and Associates, Inc.
Date:	7/16/2012
Project Name:	South Hillsboro Focus Area Plan
Intersection:	Rosedale at River
Analysis Time Period:	AM Peak Hour
Jurisdiction:	City of Hillsboro
Year:	2035 with SoHi

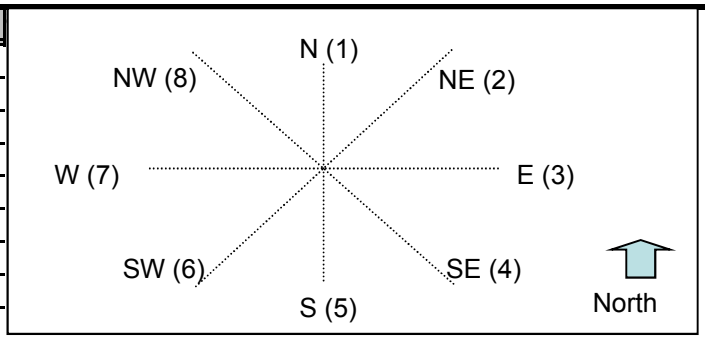

Volumes

		Roundabout Approach/Entry Legs							
		N (1)	NE (2)	E (3)	SE (4)	S (5)	SW (6)	W (7)	NW (8)
Input Volumes to Leg #	N (1), vph			330		495			
	NE (2), vph								
	E (3), vph	60				45			
	SE (4), vph								
	S (5), vph	285		95					
	SW (6), vph								
	W (7), vph								
	NW (8), vph								
Output	Total Vehicles	345	0	425	0	540	0	0	0

Volume Characteristics	N	NE	E	SE	S	SW	W	NW
% Trucks	0.0	0.0	0.0	0.0	0.0	0.0	0.0	0.0
E_t	2.0	2.0	2.0	2.0	2.0	2.0	2.0	2.0
PHF	1.00	1.00	1.00	1.00	1.00	1.00	1.00	1.00
F_{HV}	1.000	1.000	1.000	1.000	1.000	1.000	1.000	1.000

Entry/Conflicting Flows	N	NE	E	SE	S	SW	W	NW
Flow to Leg # N (1), pcu/h	0	0	330	0	495	0	0	0
NE (2), pcu/h	0	0	0	0	0	0	0	0
E (3), pcu/h	60	0	0	0	45	0	0	0
SE (4), pcu/h	0	0	0	0	0	0	0	0
S (5), pcu/h	285	0	95	0	0	0	0	0
SW (6), pcu/h	0	0	0	0	0	0	0	0
W (7), pcu/h	0	0	0	0	0	0	0	0
NW (8), pcu/h	0	0	0	0	0	0	0	0
Entry flow, pcu/h	345	0	425	0	540	0	0	0
Conflicting flow, pcu/h	95	920	495	600	60	440	440	440

Results	N	NE	E	SE	S	SW	W	NW
Entry Capacity, pcu/h	1028	NA	689	NA	1064	NA	NA	NA
Leg v/c ratio	0.34		0.62		0.51			
Control Delay, s/pcu	5.3		13.3		6.8			
LOS	A		B		A			
95th Percentile Queue (ft)	532	0	655	0	833	0	0	0

General & Site Information

Analyst:	CMG
Agency/Company:	David Evans and Associates, Inc.
Date:	7/16/2012
Project Name:	South Hillsboro Focus Area Plan
Intersection:	Rosedale at Cornelius Pass
Analysis Time Period:	AM Peak Hour
Jurisdiction:	City of Hillsboro
Year:	2035 with SoHi

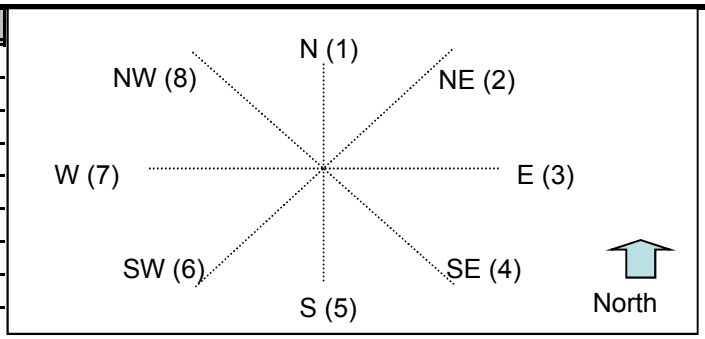

Volumes		Roundabout Approach/Entry Legs							
		N (1)	NE (2)	E (3)	SE (4)	S (5)	SW (6)	W (7)	NW (8)
Input Volumes to Leg #	N (1), vph			285				50	
	NE (2), vph								
	E (3), vph	125						130	
	SE (4), vph								
	S (5), vph								
	SW (6), vph								
	W (7), vph	10		320					
	NW (8), vph								
Output	Total Vehicles	135	0	605	0	0	0	180	0

Volume Characteristics	N	NE	E	SE	S	SW	W	NW
% Trucks	1.0	0.0	0.0	0.0	0.0	0.0	0.0	0.0
E_t	2.0	2.0	2.0	2.0	2.0	2.0	2.0	2.0
PHF	1.00	1.00	1.00	1.00	1.00	1.00	1.00	1.00
F_{HV}	0.990	1.000	1.000	1.000	1.000	1.000	1.000	1.000

Entry/Conflicting Flows	N	NE	E	SE	S	SW	W	NW
Flow to Leg # N (1), pcu/h	0	0	285	0	0	0	50	0
NE (2), pcu/h	0	0	0	0	0	0	0	0
E (3), pcu/h	126	0	0	0	0	0	130	0
SE (4), pcu/h	0	0	0	0	0	0	0	0
S (5), pcu/h	0	0	0	0	0	0	0	0
SW (6), pcu/h	0	0	0	0	0	0	0	0
W (7), pcu/h	10	0	320	0	0	0	0	0
NW (8), pcu/h	0	0	0	0	0	0	0	0
Entry flow, pcu/h	136	0	605	0	0	0	180	0
Conflicting flow, pcu/h	320	655	50	306	306	306	126	456

Results	N	NE	E	SE	S	SW	W	NW
Entry Capacity, pcu/h	821	NA	1075	NA	NA	NA	996	NA
Leg v/c ratio	0.17		0.56				0.18	
Control Delay, s/pcu	5.3		7.6				4.4	
LOS	A		A				A	
95th Percentile Queue (ft)	211	0	933	0	0	0	278	0

Movement	EBL	EBT	EBR	WBL	WBT	WBR	NBL	NBT	NBR	SBL	SBT	SBR
Lane Configurations												
Volume (vph)	20	1250	505	65	1130	110	240	140	35	95	170	25
Ideal Flow (vphpl)	1900	1900	1900	1900	1900	1900	1900	1900	1900	1900	1900	1900
Total Lost time (s)	4.0	4.0		4.0	4.0		3.0	4.0		3.0	4.0	
Lane Util. Factor	1.00	0.95		1.00	0.95		0.97	1.00		1.00	1.00	
Frt	1.00	0.96		1.00	0.99		1.00	0.97		1.00	0.98	
Flt Protected	0.95	1.00		0.95	1.00		0.95	1.00		0.95	1.00	
Satd. Flow (prot)	1805	3246		1805	3562		3502	1843		1805	1863	
Flt Permitted	0.14	1.00		0.06	1.00		0.95	1.00		0.95	1.00	
Satd. Flow (perm)	267	3246		109	3562		3502	1843		1805	1863	
Peak-hour factor, PHF	1.00	1.00	1.00	1.00	1.00	1.00	1.00	1.00	1.00	1.00	1.00	1.00
Adj. Flow (vph)	20	1250	505	65	1130	110	240	140	35	95	170	25
RTOR Reduction (vph)	0	32	0	0	5	0	0	8	0	0	5	0
Lane Group Flow (vph)	20	1723	0	65	1235	0	240	167	0	95	190	0
Heavy Vehicles (%)	0%	9%	0%	0%	0%	0%	0%	0%	0%	0%	0%	0%
Turn Type	pm+pt			pm+pt			Prot			Prot		
Protected Phases	5	2		1	6		3	8		7	4	
Permitted Phases	2			6								
Actuated Green, G (s)	71.0	71.0		74.3	73.8		9.9	17.6		9.2	16.9	
Effective Green, g (s)	71.0	71.5		74.3	74.3		10.9	18.6		10.2	17.9	
Actuated g/C Ratio	0.59	0.60		0.62	0.62		0.09	0.16		0.08	0.15	
Clearance Time (s)	4.0	4.5		4.0	4.5		4.0	5.0		4.0	5.0	
Vehicle Extension (s)	2.3	4.3		2.3	4.3		2.5	2.5		2.5	2.5	
Lane Grp Cap (vph)	182	1934		134	2205		318	286		153	278	
v/s Ratio Prot	0.00	c0.53		0.02	c0.35		c0.07	0.09		0.05	c0.10	
v/s Ratio Perm	0.06			0.28								
v/c Ratio	0.11	0.89		0.49	0.56		0.75	0.59		0.62	0.68	
Uniform Delay, d1	13.1	20.9		41.6	13.3		53.2	47.1		53.0	48.4	
Progression Factor	1.00	1.00		1.00	1.00		1.00	1.00		1.00	1.00	
Incremental Delay, d2	0.2	6.7		1.6	1.0		9.3	2.5		6.6	6.2	
Delay (s)	13.2	27.6		43.2	14.4		62.6	49.6		59.6	54.6	
Level of Service	B	C		D	B		E	D		E	D	
Approach Delay (s)		27.4			15.8			57.1			56.2	
Approach LOS		C			B			E			E	

Intersection Summary			
HCM Average Control Delay	28.9	HCM Level of Service	C
HCM Volume to Capacity ratio	0.81		
Actuated Cycle Length (s)	120.0	Sum of lost time (s)	11.0
Intersection Capacity Utilization	81.3%	ICU Level of Service	D
Analysis Period (min)	15		

c Critical Lane Group

Movement	EBL	EBT	EBR	WBL	WBT	WBR	NBL	NBT	NBR	SBL	SBT	SBR
Lane Configurations												
Volume (vph)	145	550	140	50	310	200	70	300	50	290	315	85
Ideal Flow (vphpl)	1900	1900	1900	1900	1900	1900	1900	1900	1900	1900	1900	1900
Total Lost time (s)	4.0	4.0		4.0	4.0		4.0	4.0	5.7	4.0	4.0	
Lane Util. Factor	1.00	1.00		1.00	1.00		1.00	1.00	1.00	1.00	1.00	
Frt	1.00	0.97		1.00	0.94		1.00	1.00	0.85	1.00	0.97	
Flt Protected	0.95	1.00		0.95	1.00		0.95	1.00	1.00	0.95	1.00	
Satd. Flow (prot)	1805	1835		1805	1788		1805	1900	1615	1805	1825	
Flt Permitted	0.95	1.00		0.95	1.00		0.95	1.00	1.00	0.95	1.00	
Satd. Flow (perm)	1805	1835		1805	1788		1805	1900	1615	1805	1825	
Peak-hour factor, PHF	1.00	1.00	1.00	1.00	1.00	1.00	1.00	1.00	1.00	1.00	1.00	1.00
Adj. Flow (vph)	145	550	140	50	310	200	70	300	50	290	315	85
RTOR Reduction (vph)	0	10	0	0	27	0	0	0	41	0	10	0
Lane Group Flow (vph)	145	680	0	50	483	0	70	300	9	290	390	0
Heavy Vehicles (%)	0%	0%	2%	0%	0%	0%	0%	0%	0%	0%	1%	0%
Turn Type	Prot			Prot			Prot		Perm	Prot		
Protected Phases	5	2		1	6		7	4		3	8	
Permitted Phases									4			
Actuated Green, G (s)	7.6	33.4		2.8	28.4		4.6	15.4	15.4	15.2	26.2	
Effective Green, g (s)	9.1	34.4		4.3	29.6		4.6	16.6	14.9	15.2	27.2	
Actuated g/C Ratio	0.11	0.40		0.05	0.34		0.05	0.19	0.17	0.18	0.31	
Clearance Time (s)	5.5	5.0		5.5	5.2		4.0	5.2	5.2	4.0	5.0	
Vehicle Extension (s)	3.1	2.5		3.1	2.5		2.5	2.5	2.5	2.5	2.5	
Lane Grp Cap (vph)	190	730		90	612		96	365	278	317	574	
v/s Ratio Prot	c0.08	c0.37		0.03	0.27		0.04	c0.16		c0.16	0.21	
v/s Ratio Perm									0.01			
v/c Ratio	0.76	0.93		0.56	0.79		0.73	0.82	0.03	0.91	0.68	
Uniform Delay, d1	37.7	24.9		40.2	25.6		40.3	33.5	29.8	35.0	25.8	
Progression Factor	1.00	1.00		1.00	1.00		1.00	1.00	1.00	1.00	1.00	
Incremental Delay, d2	16.6	18.5		7.4	6.5		22.6	13.6	0.0	29.5	2.9	
Delay (s)	54.2	43.5		47.5	32.1		63.0	47.1	29.8	64.5	28.7	
Level of Service	D	D		D	C		E	D	C	E	C	
Approach Delay (s)		45.3			33.5			47.7			43.8	
Approach LOS		D			C			D			D	

Intersection Summary			
HCM Average Control Delay	42.6	HCM Level of Service	D
HCM Volume to Capacity ratio	0.86		
Actuated Cycle Length (s)	86.5	Sum of lost time (s)	12.0
Intersection Capacity Utilization	86.8%	ICU Level of Service	E
Analysis Period (min)	15		

c Critical Lane Group

Movement	EBL	EBT	EBR	WBL	WBT	WBR	NBL	NBT	NBR	SBL	SBT	SBR
Lane Configurations												
Volume (vph)	120	1220	135	150	920	90	155	265	160	165	360	155
Ideal Flow (vphpl)	1900	1900	1900	1900	1900	1900	1900	1900	1900	1900	1900	1900
Total Lost time (s)	4.0	4.0		4.0	4.0	4.0		4.0	4.0	4.0	4.0	4.0
Lane Util. Factor	1.00	0.95		1.00	0.95	1.00		0.95	1.00	1.00	1.00	1.00
Frt	1.00	0.99		1.00	1.00	0.85		1.00	0.85	1.00	1.00	0.85
Flt Protected	0.95	1.00		0.95	1.00	1.00		0.98	1.00	0.95	1.00	1.00
Satd. Flow (prot)	1805	3556		1805	3610	1615		3545	1615	1805	1900	1615
Flt Permitted	0.95	1.00		0.95	1.00	1.00		0.98	1.00	0.95	1.00	1.00
Satd. Flow (perm)	1805	3556		1805	3610	1615		3545	1615	1805	1900	1615
Peak-hour factor, PHF	1.00	1.00	1.00	1.00	1.00	1.00	1.00	1.00	1.00	1.00	1.00	1.00
Adj. Flow (vph)	120	1220	135	150	920	90	155	265	160	165	360	155
RTOR Reduction (vph)	0	8	0	0	0	56	0	0	135	0	0	101
Lane Group Flow (vph)	120	1347	0	150	920	34	0	420	25	165	360	54
Heavy Vehicles (%)	0%	0%	0%	0%	0%	0%	0%	0%	0%	0%	0%	0%
Turn Type	Prot			Prot		Perm	Split		Perm	Split		custom
Protected Phases	5	2		1	6		4	4		3	3	
Permitted Phases						6			4			3 5
Actuated Green, G (s)	7.7	39.5		6.0	37.8	37.8		15.9	15.9	21.1	21.1	33.8
Effective Green, g (s)	7.7	40.0		6.0	38.3	38.3		15.9	15.9	22.1	22.1	34.8
Actuated g/C Ratio	0.08	0.40		0.06	0.38	0.38		0.16	0.16	0.22	0.22	0.35
Clearance Time (s)	4.0	4.5		4.0	4.5	4.5		4.0	4.0	5.0	5.0	
Vehicle Extension (s)	2.3	4.3		2.3	4.3	4.3		2.3	2.3	2.3	2.3	
Lane Grp Cap (vph)	139	1422		108	1383	619		564	257	399	420	562
v/s Ratio Prot	0.07	c0.38		c0.08	0.25			c0.12		0.09	c0.19	
v/s Ratio Perm						0.02			0.02			0.03
v/c Ratio	0.86	0.95		1.39	0.67	0.06		0.74	0.10	0.41	0.86	0.10
Uniform Delay, d1	45.6	29.0		47.0	25.5	19.4		40.1	35.9	33.4	37.4	22.0
Progression Factor	1.00	1.00		1.00	1.00	1.00		1.00	1.00	1.00	1.00	1.00
Incremental Delay, d2	38.3	14.2		221.9	2.5	0.2		4.9	0.1	0.4	15.4	0.0
Delay (s)	83.9	43.2		268.9	28.1	19.6		45.0	36.0	33.8	52.8	22.0
Level of Service	F	D		F	C	B		D	D	C	D	C
Approach Delay (s)		46.5			58.6			42.5			41.2	
Approach LOS		D			E			D			D	

Intersection Summary			
HCM Average Control Delay	48.6	HCM Level of Service	D
HCM Volume to Capacity ratio	0.87		
Actuated Cycle Length (s)	100.0	Sum of lost time (s)	12.0
Intersection Capacity Utilization	90.4%	ICU Level of Service	E
Analysis Period (min)	15		

c Critical Lane Group

Movement	EBL	EBT	EBR	WBL	WBT	WBR	NBL	NBT	NBR	SBL	SBT	SBR
Lane Configurations												
Volume (vph)	205	1455	230	350	1185	175	165	235	170	165	510	115
Ideal Flow (vphpl)	1900	1900	1900	1900	1900	1900	1900	1900	1900	1900	1900	1900
Total Lost time (s)	4.0	4.0	4.0	4.0	4.0	4.0	4.0	4.0	4.0	4.0	4.0	
Lane Util. Factor	1.00	0.95	1.00	1.00	0.95	1.00	1.00	0.95	1.00	1.00	0.95	
Frt	1.00	1.00	0.85	1.00	1.00	0.85	1.00	1.00	0.85	1.00	0.97	
Flt Protected	0.95	1.00	1.00	0.95	1.00	1.00	0.95	1.00	1.00	0.95	1.00	
Satd. Flow (prot)	1805	3610	1615	1805	3610	1615	1805	3610	1615	1805	3510	
Flt Permitted	0.95	1.00	1.00	0.95	1.00	1.00	0.95	1.00	1.00	0.95	1.00	
Satd. Flow (perm)	1805	3610	1615	1805	3610	1615	1805	3610	1615	1805	3510	
Peak-hour factor, PHF	1.00	1.00	1.00	1.00	1.00	1.00	1.00	1.00	1.00	1.00	1.00	1.00
Adj. Flow (vph)	205	1455	230	350	1185	175	165	235	170	165	510	115
RTOR Reduction (vph)	0	0	99	0	0	96	0	0	57	0	16	0
Lane Group Flow (vph)	205	1455	131	350	1185	79	165	235	113	165	609	0
Heavy Vehicles (%)	0%	0%	0%	0%	0%	0%	0%	0%	0%	0%	0%	0%
Turn Type	Prot		Perm	Prot		Perm	Prot		pt+ov	Prot		
Protected Phases	5	2		1	6		3	8	8 1	7	4	
Permitted Phases			2			6						
Actuated Green, G (s)	14.8	52.6	52.6	15.0	52.8	52.8	13.3	12.5	27.5	22.0	21.2	
Effective Green, g (s)	14.8	54.0	54.0	15.0	54.2	54.2	13.3	13.0	28.5	22.0	21.7	
Actuated g/C Ratio	0.12	0.45	0.45	0.12	0.45	0.45	0.11	0.11	0.24	0.18	0.18	
Clearance Time (s)	4.0	5.4	5.4	4.0	5.4	5.4	4.0	4.5		4.0	4.5	
Vehicle Extension (s)	2.3	4.4	4.4	2.3	4.4	4.4	2.3	2.3		2.3	2.3	
Lane Grp Cap (vph)	223	1625	727	226	1631	729	200	391	384	331	635	
v/s Ratio Prot	0.11	c0.40		c0.19	0.33		c0.09	0.07	0.07	0.09	c0.17	
v/s Ratio Perm			0.08			0.05						
v/c Ratio	0.92	0.90	0.18	1.55	0.73	0.11	0.82	0.60	0.29	0.50	0.96	
Uniform Delay, d1	52.0	30.4	19.8	52.5	26.9	19.0	52.2	51.0	37.5	44.0	48.7	
Progression Factor	1.00	1.00	1.00	1.13	0.78	0.77	1.00	1.00	1.00	1.00	1.00	
Incremental Delay, d2	38.1	8.1	0.5	265.5	2.6	0.3	22.7	2.0	0.2	0.7	25.4	
Delay (s)	90.1	38.5	20.3	325.0	23.4	14.8	74.9	53.1	37.8	44.7	74.1	
Level of Service	F	D	C	F	C	B	E	D	D	D	E	
Approach Delay (s)		41.9			84.3			54.8			68.0	
Approach LOS		D			F			D			E	

Intersection Summary			
HCM Average Control Delay	62.1	HCM Level of Service	E
HCM Volume to Capacity ratio	0.99		
Actuated Cycle Length (s)	120.0	Sum of lost time (s)	16.0
Intersection Capacity Utilization	99.9%	ICU Level of Service	F
Analysis Period (min)	15		

c Critical Lane Group

Movement	EBL	EBT	EBR	WBL	WBT	WBR	NBL	NBT	NBR	SBL	SBT	SBR
Lane Configurations												
Volume (veh/h)	0	0	250	0	0	90	0	480	60	0	750	340
Sign Control		Stop			Stop			Free			Free	
Grade		0%			0%			0%			0%	
Peak Hour Factor	1.00	1.00	1.00	1.00	1.00	1.00	1.00	1.00	1.00	1.00	1.00	1.00
Hourly flow rate (vph)	0	0	250	0	0	90	0	480	60	0	750	340
Pedestrians					1500							
Lane Width (ft)					12.0							
Walking Speed (ft/s)					4.0							
Percent Blockage					80							
Right turn flare (veh)												
Median type								None			None	
Median storage veh)												
Upstream signal (ft)											280	
pX, platoon unblocked	0.82	0.82	0.82	0.82	0.82		0.82					
vC, conflicting volume	1350	2790	750	3010	3100	2010	1090			2040		
vC1, stage 1 conf vol												
vC2, stage 2 conf vol												
vCu, unblocked vol	1318	3069	588	3336	3446	2010	1001			2040		
tC, single (s)	7.1	6.5	6.2	7.1	6.5	6.2	4.1			4.1		
tC, 2 stage (s)												
tF (s)	3.5	4.0	3.3	3.5	4.0	3.3	2.2			2.2		
p0 queue free %	0	100	41	100	100	0	100			100		
cM capacity (veh/h)	0	2	422	0	1	15	575			56		

Direction, Lane #	EB 1	WB 1	NB 1	SB 1	SB 2
Volume Total	250	90	540	750	340
Volume Left	0	0	0	0	0
Volume Right	250	90	60	0	340
cSH	422	15	1700	1700	1700
Volume to Capacity	0.59	6.00	0.32	0.44	0.20
Queue Length 95th (ft)	93	Err	0	0	0
Control Delay (s)	25.2	Err	0.0	0.0	0.0
Lane LOS	D	F			
Approach Delay (s)	25.2	Err	0.0	0.0	
Approach LOS	D	F			

Intersection Summary			
Average Delay	460.0		
Intersection Capacity Utilization	61.6%	ICU Level of Service	B
Analysis Period (min)	15		

Movement	EBL	EBT	EBR	WBL	WBT	WBR	NBL	NBT	NBR	SBL	SBT	SBR
Lane Configurations												
Volume (vph)	165	1395	270	170	1330	120	125	180	170	25	315	225
Ideal Flow (vphpl)	1900	1900	1900	1900	1900	1900	1900	1900	1900	1900	1900	1900
Total Lost time (s)	4.0	4.0	4.0	4.0	4.0		4.0	4.0		4.0	4.0	
Lane Util. Factor	1.00	0.95	1.00	1.00	0.95		1.00	0.95		1.00	0.95	
Frt	1.00	1.00	0.85	1.00	0.99		1.00	0.93		1.00	0.94	
Flt Protected	0.95	1.00	1.00	0.95	1.00		0.95	1.00		0.95	1.00	
Satd. Flow (prot)	1770	3505	1599	1641	3467		1770	3251		1770	3262	
Flt Permitted	0.09	1.00	1.00	0.08	1.00		0.16	1.00		0.54	1.00	
Satd. Flow (perm)	170	3505	1599	145	3467		292	3251		1010	3262	
Peak-hour factor, PHF	1.00	1.00	1.00	1.00	1.00	1.00	1.00	1.00	1.00	1.00	1.00	1.00
Adj. Flow (vph)	165	1395	270	170	1330	120	125	180	170	25	315	225
RTOR Reduction (vph)	0	0	72	0	5	0	0	128	0	0	111	0
Lane Group Flow (vph)	165	1395	198	170	1445	0	125	222	0	25	429	0
Heavy Vehicles (%)	2%	3%	1%	10%	3%	1%	2%	1%	5%	2%	5%	2%
Turn Type	pm+pt		Perm	pm+pt			pm+pt			pm+pt		
Protected Phases	5	2		1	6		3	8		7	4	
Permitted Phases	2		2	6			8			4		
Actuated Green, G (s)	60.0	58.6	58.6	59.0	59.0		36.1	29.1		24.5	21.5	
Effective Green, g (s)	60.0	60.0	60.0	59.0	60.4		36.1	29.6		24.5	22.0	
Actuated g/C Ratio	0.50	0.50	0.50	0.49	0.50		0.30	0.25		0.20	0.18	
Clearance Time (s)	4.0	5.4	5.4	4.0	5.4		4.0	4.5		4.0	4.5	
Vehicle Extension (s)	2.3	4.5	4.5	2.3	4.5		2.5	2.5		2.5	2.5	
Lane Grp Cap (vph)	232	1753	800	213	1745		218	802		225	598	
v/s Ratio Prot	0.07	c0.40		0.08	c0.42		c0.05	0.07		0.00	c0.13	
v/s Ratio Perm	0.29		0.12	0.32			0.12			0.02		
v/c Ratio	0.71	0.80	0.25	0.80	0.83		0.57	0.28		0.11	0.72	
Uniform Delay, d1	39.9	24.9	17.1	29.6	25.4		33.2	36.5		38.5	46.1	
Progression Factor	1.01	1.04	1.15	1.80	1.11		1.00	1.00		1.00	1.00	
Incremental Delay, d2	7.6	3.3	0.6	14.7	3.8		3.0	0.1		0.2	3.8	
Delay (s)	48.0	29.2	20.2	68.2	32.1		36.1	36.7		38.7	49.9	
Level of Service	D	C	C	E	C		D	D		D	D	
Approach Delay (s)		29.6			35.9			36.5			49.4	
Approach LOS		C			D			D			D	

Intersection Summary			
HCM Average Control Delay	35.1	HCM Level of Service	D
HCM Volume to Capacity ratio	0.77		
Actuated Cycle Length (s)	120.0	Sum of lost time (s)	12.0
Intersection Capacity Utilization	85.9%	ICU Level of Service	E
Analysis Period (min)	15		

c Critical Lane Group

Movement	EBL	EBT	EBR	WBL	WBT	WBR	NBL	NBT	NBR	SBL	SBT	SBR
Lane Configurations												
Volume (vph)	195	155	230	195	165	190	70	705	75	125	1120	325
Ideal Flow (vphpl)	1900	1900	1900	1900	1900	1900	1900	1900	1900	1900	1900	1900
Total Lost time (s)	4.5	4.5		4.5	4.5		4.5	4.5		4.5	4.5	
Lane Util. Factor	1.00	1.00		1.00	1.00		1.00	0.95		1.00	0.95	
Frt	1.00	0.91		1.00	0.92		1.00	0.99		1.00	0.97	
Flt Protected	0.95	1.00		0.95	1.00		0.95	1.00		0.95	1.00	
Satd. Flow (prot)	1770	1696		1770	1713		1770	3488		1770	3420	
Flt Permitted	0.17	1.00		0.18	1.00		0.09	1.00		0.24	1.00	
Satd. Flow (perm)	320	1696		336	1713		168	3488		451	3420	
Peak-hour factor, PHF	1.00	1.00	1.00	1.00	1.00	1.00	1.00	1.00	1.00	1.00	1.00	1.00
Adj. Flow (vph)	195	155	230	195	165	190	70	705	75	125	1120	325
RTOR Reduction (vph)	0	43	0	0	31	0	0	8	0	0	25	0
Lane Group Flow (vph)	195	342	0	195	324	0	70	772	0	125	1420	0
Turn Type	pm+pt			pm+pt			pm+pt			pm+pt		
Protected Phases	3	8		7	4		1	6		5	2	
Permitted Phases	8			4			6			2		
Actuated Green, G (s)	36.5	23.8		34.3	22.7		49.9	44.8		53.7	46.7	
Effective Green, g (s)	35.5	23.3		33.3	22.2		48.9	44.3		52.7	46.2	
Actuated g/C Ratio	0.34	0.23		0.32	0.22		0.47	0.43		0.51	0.45	
Clearance Time (s)	4.0	4.0		4.0	4.0		4.0	4.0		4.0	4.0	
Vehicle Extension (s)	2.5	2.5		2.5	2.5		2.5	2.5		2.5	2.5	
Lane Grp Cap (vph)	281	383		263	368		151	1497		313	1531	
v/s Ratio Prot	c0.08	c0.20		0.08	0.19		0.02	0.22		c0.03	c0.42	
v/s Ratio Perm	0.16			0.16			0.20			0.18		
v/c Ratio	0.69	0.89		0.74	0.88		0.46	0.52		0.40	0.93	
Uniform Delay, d1	26.6	38.8		28.1	39.2		21.5	21.6		14.6	26.9	
Progression Factor	1.00	1.00		1.00	1.00		1.00	1.00		1.00	1.00	
Incremental Delay, d2	6.7	22.2		10.2	20.4		1.6	0.2		0.6	10.0	
Delay (s)	33.2	61.0		38.3	59.6		23.1	21.8		15.2	36.9	
Level of Service	C	E		D	E		C	C		B	D	
Approach Delay (s)		51.7			52.0			21.9			35.2	
Approach LOS		D			D			C			D	

Intersection Summary			
HCM Average Control Delay	37.3	HCM Level of Service	D
HCM Volume to Capacity ratio	0.79		
Actuated Cycle Length (s)	103.2	Sum of lost time (s)	9.0
Intersection Capacity Utilization	93.3%	ICU Level of Service	F
Analysis Period (min)	15		
c Critical Lane Group			

Movement	EBL	EBT	WBT	WBR	SBL	SBR
Lane Configurations						
Volume (vph)	50	1575	1540	85	200	95
Ideal Flow (vphpl)	1900	1900	1900	1900	1900	1900
Total Lost time (s)	4.0	4.0	4.0	4.0	4.0	4.0
Lane Util. Factor	1.00	0.95	0.95	1.00	1.00	1.00
Frt	1.00	1.00	1.00	0.85	1.00	0.85
Flt Protected	0.95	1.00	1.00	1.00	0.95	1.00
Satd. Flow (prot)	1805	3610	3610	1615	1805	1615
Flt Permitted	0.95	1.00	1.00	1.00	0.95	1.00
Satd. Flow (perm)	1805	3610	3610	1615	1805	1615
Peak-hour factor, PHF	1.00	1.00	1.00	1.00	1.00	1.00
Adj. Flow (vph)	50	1575	1540	85	200	95
RTOR Reduction (vph)	0	0	0	8	0	80
Lane Group Flow (vph)	50	1575	1540	77	200	15
Heavy Vehicles (%)	0%	0%	0%	0%	0%	0%
Turn Type	Prot			Perm		Prot
Protected Phases	5	2	6		4	4
Permitted Phases				6		
Actuated Green, G (s)	6.7	91.3	80.6	80.6	18.1	18.1
Effective Green, g (s)	6.7	92.7	82.0	82.0	19.3	19.3
Actuated g/C Ratio	0.06	0.77	0.68	0.68	0.16	0.16
Clearance Time (s)	4.0	5.4	5.4	5.4	5.2	5.2
Vehicle Extension (s)	2.3	4.5	4.5	4.5	2.5	2.5
Lane Grp Cap (vph)	101	2789	2467	1104	290	260
v/s Ratio Prot	0.03	c0.44	c0.43		c0.11	0.01
v/s Ratio Perm				0.05		
v/c Ratio	0.50	0.56	0.62	0.07	0.69	0.06
Uniform Delay, d1	55.0	5.5	10.5	6.3	47.5	42.7
Progression Factor	0.85	0.86	0.15	0.05	1.00	1.00
Incremental Delay, d2	1.5	0.6	0.4	0.0	6.1	0.1
Delay (s)	48.1	5.3	2.0	0.4	53.7	42.7
Level of Service	D	A	A	A	D	D
Approach Delay (s)		6.6	1.9		50.1	
Approach LOS		A	A		D	

Intersection Summary			
HCM Average Control Delay	8.1	HCM Level of Service	A
HCM Volume to Capacity ratio	0.64		
Actuated Cycle Length (s)	120.0	Sum of lost time (s)	12.0
Intersection Capacity Utilization	61.3%	ICU Level of Service	B
Analysis Period (min)	15		

c Critical Lane Group

Movement	EBL	EBT	EBR	WBL	WBT	WBR	NBL	NBT	NBR	SBL	SBT	SBR
Lane Configurations												
Volume (vph)	125	115	25	140	50	225	30	165	100	290	305	160
Ideal Flow (vphpl)	1900	1900	1900	1900	1900	1900	1900	1900	1900	1900	1900	1900
Total Lost time (s)	4.5	4.5		4.5	4.5		4.5	4.5		4.5	4.5	
Lane Util. Factor	1.00	1.00		1.00	1.00		1.00	1.00		1.00	1.00	
Frt	1.00	0.97		1.00	0.88		1.00	0.94		1.00	0.95	
Flt Protected	0.95	1.00		0.95	1.00		0.95	1.00		0.95	1.00	
Satd. Flow (prot)	1770	1813		1805	1661		1770	1792		1805	1790	
Flt Permitted	0.43	1.00		0.54	1.00		0.50	1.00		0.34	1.00	
Satd. Flow (perm)	796	1813		1023	1661		924	1792		647	1790	
Peak-hour factor, PHF	1.00	1.00	1.00	1.00	1.00	1.00	1.00	1.00	1.00	1.00	1.00	1.00
Adj. Flow (vph)	125	115	25	140	50	225	30	165	100	290	305	160
RTOR Reduction (vph)	0	8	0	0	144	0	0	20	0	0	17	0
Lane Group Flow (vph)	125	132	0	140	131	0	30	245	0	290	448	0
Heavy Vehicles (%)	2%	2%	2%	0%	2%	0%	2%	0%	0%	0%	0%	2%
Turn Type	pm+pt			pm+pt			pm+pt			pm+pt		
Protected Phases	3	8		7	4		1	6		5	2	
Permitted Phases	8			4			6			2		
Actuated Green, G (s)	18.6	11.8		23.2	14.1		18.3	17.0		35.7	30.4	
Effective Green, g (s)	17.6	11.3		22.2	13.6		17.3	16.5		35.2	29.9	
Actuated g/C Ratio	0.26	0.16		0.32	0.20		0.25	0.24		0.51	0.44	
Clearance Time (s)	4.0	4.0		4.0	4.0		4.0	4.0		4.0	4.0	
Vehicle Extension (s)	2.5	2.5		2.5	2.5		2.5	2.5		2.5	2.5	
Lane Grp Cap (vph)	294	299		429	329		243	431		572	780	
v/s Ratio Prot	0.04	0.07		c0.04	c0.08		0.00	0.14		c0.11	c0.25	
v/s Ratio Perm	0.07			0.06			0.03			0.16		
v/c Ratio	0.43	0.44		0.33	0.40		0.12	0.57		0.51	0.57	
Uniform Delay, d1	20.5	25.8		17.1	23.9		19.5	22.9		10.5	14.6	
Progression Factor	1.00	1.00		1.00	1.00		1.00	1.00		1.00	1.00	
Incremental Delay, d2	0.7	0.8		0.3	0.6		0.2	1.4		0.5	0.8	
Delay (s)	21.2	26.6		17.4	24.5		19.7	24.3		11.0	15.4	
Level of Service	C	C		B	C		B	C		B	B	
Approach Delay (s)		24.0			22.1			23.9			13.7	
Approach LOS		C			C			C			B	

Intersection Summary			
HCM Average Control Delay	19.0	HCM Level of Service	B
HCM Volume to Capacity ratio	0.53		
Actuated Cycle Length (s)	68.6	Sum of lost time (s)	18.0
Intersection Capacity Utilization	69.3%	ICU Level of Service	C
Analysis Period (min)	15		

c Critical Lane Group

Movement	EBL	EBT	EBR	WBL	WBT	WBR	NBL	NBT	NBR	SBL	SBT	SBR
Lane Configurations												
Volume (vph)	125	375	200	115	350	165	100	590	55	315	1045	90
Ideal Flow (vphpl)	1900	1900	1900	1900	1900	1900	1900	1900	1900	1900	1900	1900
Total Lost time (s)	4.0	4.0		4.0	4.0		4.0	4.0		4.0	4.0	
Lane Util. Factor	1.00	1.00		1.00	1.00		1.00	0.95		1.00	0.95	
Frt	1.00	0.95		1.00	0.95		1.00	0.99		1.00	0.99	
Flt Protected	0.95	1.00		0.95	1.00		0.95	1.00		0.95	1.00	
Satd. Flow (prot)	1805	1801		1805	1809		1805	3564		1805	3567	
Flt Permitted	0.95	1.00		0.95	1.00		0.13	1.00		0.19	1.00	
Satd. Flow (perm)	1805	1801		1805	1809		243	3564		356	3567	
Peak-hour factor, PHF	1.00	1.00	1.00	1.00	1.00	1.00	1.00	1.00	1.00	1.00	1.00	1.00
Adj. Flow (vph)	125	375	200	115	350	165	100	590	55	315	1045	90
RTOR Reduction (vph)	0	16	0	0	14	0	0	6	0	0	5	0
Lane Group Flow (vph)	125	559	0	115	501	0	100	639	0	315	1130	0
Heavy Vehicles (%)	0%	0%	0%	0%	0%	0%	0%	0%	0%	0%	0%	0%
Turn Type	Prot			Prot			pm+pt			pm+pt		
Protected Phases	3	8		7	4		1	6		5	2	
Permitted Phases							6			2		
Actuated Green, G (s)	9.0	38.6		8.7	38.3		35.3	30.3		50.6	40.6	
Effective Green, g (s)	10.0	40.0		9.7	39.7		37.3	31.8		51.6	42.1	
Actuated g/C Ratio	0.09	0.35		0.09	0.35		0.33	0.28		0.45	0.37	
Clearance Time (s)	5.0	5.4		5.0	5.4		5.0	5.5		5.0	5.5	
Vehicle Extension (s)	0.2	5.0		0.2	8.0		0.2	5.0		0.2	5.0	
Lane Grp Cap (vph)	159	633		154	631		162	996		369	1320	
v/s Ratio Prot	c0.07	c0.31		0.06	0.28		0.03	0.18		c0.12	c0.32	
v/s Ratio Perm							0.17			0.27		
v/c Ratio	0.79	0.88		0.75	0.79		0.62	0.64		0.85	0.86	
Uniform Delay, d1	50.9	34.7		50.9	33.4		29.5	36.0		23.3	33.1	
Progression Factor	1.00	1.00		1.00	1.00		1.00	1.00		1.00	1.00	
Incremental Delay, d2	20.6	14.7		15.7	9.1		4.8	1.9		16.6	6.2	
Delay (s)	71.4	49.4		66.6	42.5		34.4	37.9		39.9	39.3	
Level of Service	E	D		E	D		C	D		D	D	
Approach Delay (s)		53.3			46.9			37.5			39.4	
Approach LOS		D			D			D			D	

Intersection Summary			
HCM Average Control Delay	43.1	HCM Level of Service	D
HCM Volume to Capacity ratio	0.82		
Actuated Cycle Length (s)	113.8	Sum of lost time (s)	8.0
Intersection Capacity Utilization	88.9%	ICU Level of Service	E
Analysis Period (min)	15		

c Critical Lane Group

Movement	EBL	EBT	EBR	WBL	WBT	WBR	NBL	NBT	NBR	SBL	SBT	SBR
Lane Configurations												
Volume (vph)	165	1020	590	340	1345	255	230	435	230	400	1145	150
Ideal Flow (vphpl)	1900	1900	1900	1900	1900	1900	1900	1900	1900	1900	1900	1900
Total Lost time (s)	4.0	4.0	4.0	4.0	4.0	4.0	4.0	4.0	4.0	4.0	4.0	
Lane Util. Factor	0.97	0.95	1.00	0.97	0.95	1.00	0.97	0.95	1.00	0.97	0.95	
Frt	1.00	1.00	0.85	1.00	1.00	0.85	1.00	1.00	0.85	1.00	0.98	
Flt Protected	0.95	1.00	1.00	0.95	1.00	1.00	0.95	1.00	1.00	0.95	1.00	
Satd. Flow (prot)	3502	3610	1583	3433	3610	1599	3433	3539	1583	3502	3482	
Flt Permitted	0.95	1.00	1.00	0.95	1.00	1.00	0.95	1.00	1.00	0.95	1.00	
Satd. Flow (perm)	3502	3610	1583	3433	3610	1599	3433	3539	1583	3502	3482	
Peak-hour factor, PHF	1.00	1.00	1.00	1.00	1.00	1.00	1.00	1.00	1.00	1.00	1.00	1.00
Adj. Flow (vph)	165	1020	590	340	1345	255	230	435	230	400	1145	150
RTOR Reduction (vph)	0	0	150	0	0	119	0	0	138	0	8	0
Lane Group Flow (vph)	165	1020	440	340	1345	136	230	435	92	400	1287	0
Heavy Vehicles (%)	0%	0%	2%	2%	0%	1%	2%	2%	2%	0%	2%	1%
Turn Type	Prot		Perm	Prot		Perm	Prot		Perm	Prot		
Protected Phases	5	2		1	6		3	8		7	4	
Permitted Phases			2			6			8			
Actuated Green, G (s)	6.0	35.8	35.8	13.8	43.6	43.6	10.7	35.1	35.1	17.9	41.3	
Effective Green, g (s)	6.0	37.2	37.2	13.8	45.0	45.0	10.7	35.1	35.1	17.9	42.3	
Actuated g/C Ratio	0.05	0.31	0.31	0.12	0.38	0.38	0.09	0.29	0.29	0.15	0.35	
Clearance Time (s)	4.0	5.4	5.4	4.0	5.4	5.4	4.0	4.0	4.0	4.0	5.0	
Vehicle Extension (s)	2.3	4.5	4.5	2.5	4.5	4.5	2.5	2.5	2.5	2.3	2.3	
Lane Grp Cap (vph)	175	1119	491	395	1354	600	306	1035	463	522	1227	
v/s Ratio Prot	0.05	0.28		c0.10	c0.37		0.07	0.12		c0.11	c0.37	
v/s Ratio Perm			0.28			0.09			0.06			
v/c Ratio	0.94	0.91	0.90	0.86	0.99	0.23	0.75	0.42	0.20	0.77	1.05	
Uniform Delay, d1	56.8	39.8	39.5	52.2	37.4	25.6	53.4	34.2	31.9	49.0	38.9	
Progression Factor	1.06	0.90	0.98	0.79	0.96	1.08	0.94	0.97	1.96	0.83	1.05	
Incremental Delay, d2	45.9	10.9	18.8	12.4	18.7	0.6	7.3	0.2	0.1	5.0	36.8	
Delay (s)	105.9	46.9	57.7	53.5	54.5	28.4	57.3	33.2	62.5	45.5	77.6	
Level of Service	F	D	E	D	D	C	E	C	E	D	E	
Approach Delay (s)		55.9			50.9			46.9			70.0	
Approach LOS		E			D			D			E	

Intersection Summary			
HCM Average Control Delay	56.9	HCM Level of Service	E
HCM Volume to Capacity ratio	0.97		
Actuated Cycle Length (s)	120.0	Sum of lost time (s)	12.0
Intersection Capacity Utilization	98.2%	ICU Level of Service	F
Analysis Period (min)	15		

c Critical Lane Group

Movement	EBL	EBT	EBR	WBL	WBT	WBR	NBL	NBT	NBR	SBL	SBT	SBR
Lane Configurations												
Volume (vph)	75	65	260	180	65	50	85	465	195	145	1180	45
Ideal Flow (vphpl)	1900	1900	1900	1900	1900	1900	1900	1900	1900	1900	1900	1900
Total Lost time (s)	4.0	4.0		4.0	4.0		4.0	4.0		4.0	4.0	
Lane Util. Factor	1.00	1.00		1.00	1.00		1.00	0.95		1.00	0.95	
Frt	1.00	0.88		1.00	0.93		1.00	0.96		1.00	0.99	
Flt Protected	0.95	1.00		0.95	1.00		0.95	1.00		0.95	1.00	
Satd. Flow (prot)	1770	1639		1770	1741		1770	3382		1770	3520	
Flt Permitted	1.00	1.00		1.00	1.00		0.08	1.00		0.40	1.00	
Satd. Flow (perm)	1863	1639		1863	1741		155	3382		745	3520	
Peak-hour factor, PHF	1.00	1.00	1.00	1.00	1.00	1.00	1.00	1.00	1.00	1.00	1.00	1.00
Adj. Flow (vph)	75	65	260	180	65	50	85	465	195	145	1180	45
RTOR Reduction (vph)	0	135	0	0	29	0	0	33	0	0	2	0
Lane Group Flow (vph)	75	190	0	180	86	0	85	627	0	145	1223	0
Turn Type	pm+pt			pm+pt			pm+pt			pm+pt		
Protected Phases	3	8		7	4		1	6		5	2	
Permitted Phases	8			4			6			2		
Actuated Green, G (s)	19.0	19.0		14.2	14.2		55.9	55.9		64.4	64.4	
Effective Green, g (s)	19.0	19.0		14.2	14.2		55.9	55.9		64.4	64.4	
Actuated g/C Ratio	0.16	0.16		0.12	0.12		0.47	0.47		0.54	0.54	
Clearance Time (s)	4.0	4.0		4.0	4.0		4.0	4.0		4.0	4.0	
Vehicle Extension (s)	2.5	2.5		2.5	2.5		2.5	2.5		2.5	2.5	
Lane Grp Cap (vph)	295	260		220	206		169	1575		534	1889	
v/s Ratio Prot	0.04	c0.12		0.09	0.05		c0.03	0.19		0.04	c0.35	
v/s Ratio Perm	0.00			c0.01			0.20			0.11		
v/c Ratio	0.25	0.73		0.82	0.42		0.50	0.40		0.27	0.65	
Uniform Delay, d1	42.7	48.1		52.0	49.1		23.0	21.0		16.1	19.7	
Progression Factor	1.00	1.00		1.00	1.00		0.70	0.24		1.00	1.00	
Incremental Delay, d2	0.3	9.6		20.0	1.0		1.5	0.7		0.2	1.7	
Delay (s)	43.1	57.7		72.1	50.1		17.5	5.7		16.3	21.5	
Level of Service	D	E		E	D		B	A		B	C	
Approach Delay (s)		54.9			63.5			7.0			20.9	
Approach LOS		D			E			A			C	

Intersection Summary			
HCM Average Control Delay	26.5	HCM Level of Service	C
HCM Volume to Capacity ratio	0.66		
Actuated Cycle Length (s)	120.0	Sum of lost time (s)	12.0
Intersection Capacity Utilization	81.5%	ICU Level of Service	D
Analysis Period (min)	15		
c Critical Lane Group			

Movement	EBL	EBT	EBR	WBL	WBT	WBR	NBL	NBT	NBR	SBL	SBT	SBR
Lane Configurations												
Volume (vph)	20	1410	360	260	1630	90	150	230	165	90	440	90
Ideal Flow (vphpl)	1900	1900	1900	1900	1900	1900	1900	1900	1900	1900	1900	1900
Total Lost time (s)	4.0	4.0	4.0	4.0	4.0	4.0	3.5	4.0	5.0	3.5	4.0	
Lane Util. Factor	1.00	0.95	1.00	1.00	0.95	1.00	1.00	1.00	1.00	1.00	0.95	
Frt	1.00	1.00	0.85	1.00	1.00	0.85	1.00	1.00	0.85	1.00	0.97	
Flt Protected	0.95	1.00	1.00	0.95	1.00	1.00	0.95	1.00	1.00	0.95	1.00	
Satd. Flow (prot)	1752	3539	1583	1752	3539	1568	1787	1881	1599	1752	3483	
Flt Permitted	0.95	1.00	1.00	0.95	1.00	1.00	0.19	1.00	1.00	0.31	1.00	
Satd. Flow (perm)	1752	3539	1583	1752	3539	1568	349	1881	1599	565	3483	
Peak-hour factor, PHF	1.00	1.00	1.00	1.00	1.00	1.00	1.00	1.00	1.00	1.00	1.00	1.00
Adj. Flow (vph)	20	1410	360	260	1630	90	150	230	165	90	440	90
RTOR Reduction (vph)	0	0	109	0	0	14	0	0	137	0	15	0
Lane Group Flow (vph)	20	1410	251	260	1630	76	150	230	28	90	515	0
Heavy Vehicles (%)	3%	2%	2%	3%	2%	3%	1%	1%	1%	3%	0%	6%
Turn Type	Prot		Perm	Prot		Perm	pm+pt		Perm	pm+pt		
Protected Phases	5	2		1	6		3	8		7	4	
Permitted Phases			2			6	8		8	4		
Actuated Green, G (s)	2.0	54.2	54.2	21.4	73.6	73.6	26.2	21.2	21.2	28.2	22.2	
Effective Green, g (s)	2.0	54.9	54.9	21.4	74.3	74.3	27.2	21.7	20.7	29.2	22.7	
Actuated g/C Ratio	0.02	0.46	0.46	0.18	0.62	0.62	0.23	0.18	0.17	0.24	0.19	
Clearance Time (s)	4.0	4.7	4.7	4.0	4.7	4.7	4.0	4.5	4.5	4.0	4.5	
Vehicle Extension (s)	2.3	4.5	4.5	2.3	4.5	4.5	2.5	2.5	2.5	2.5	2.5	
Lane Grp Cap (vph)	29	1619	724	312	2191	971	145	340	276	202	659	
v/s Ratio Prot	0.01	c0.40		c0.15	0.46		c0.05	0.12		0.02	0.15	
v/s Ratio Perm			0.16			0.05	c0.19		0.02	0.08		
v/c Ratio	0.69	0.87	0.35	0.83	0.74	0.08	1.03	0.68	0.10	0.45	0.78	
Uniform Delay, d1	58.7	29.4	21.0	47.6	16.1	9.1	44.3	45.9	41.8	36.8	46.3	
Progression Factor	1.24	0.73	0.91	0.69	0.20	0.10	1.00	1.00	1.00	1.00	1.00	
Incremental Delay, d2	33.5	4.8	0.9	12.3	1.7	0.1	84.2	4.8	0.1	1.1	5.8	
Delay (s)	106.2	26.1	19.9	45.0	4.9	1.0	128.4	50.7	41.9	37.9	52.1	
Level of Service	F	C	B	D	A	A	F	D	D	D	D	
Approach Delay (s)		25.8			10.0			69.4			50.1	
Approach LOS		C			A			E			D	

Intersection Summary			
HCM Average Control Delay	27.3	HCM Level of Service	C
HCM Volume to Capacity ratio	0.89		
Actuated Cycle Length (s)	120.0	Sum of lost time (s)	15.0
Intersection Capacity Utilization	90.1%	ICU Level of Service	E
Analysis Period (min)	15		

c Critical Lane Group

Movement	EBL	EBT	EBR	WBL	WBT	WBR	NBL	NBT	NBR	SBL	SBT	SBR
Lane Configurations												
Volume (vph)	150	1330	230	200	1545	185	205	190	120	285	335	120
Ideal Flow (vphpl)	1900	1900	1900	1900	1900	1900	1900	1900	1900	1900	1900	1900
Total Lost time (s)	4.0	4.0	4.0	4.0	4.0	4.0	4.0	4.0		4.0	4.0	4.5
Lane Util. Factor	1.00	0.95	1.00	0.97	0.95	1.00	1.00	0.95		1.00	1.00	1.00
Frt	1.00	1.00	0.85	1.00	1.00	0.85	1.00	0.94		1.00	1.00	0.85
Flt Protected	0.95	1.00	1.00	0.95	1.00	1.00	0.95	1.00		0.95	1.00	1.00
Satd. Flow (prot)	1805	3610	1615	3502	3312	1615	1805	3400		1805	1900	1615
Flt Permitted	0.95	1.00	1.00	0.95	1.00	1.00	0.32	1.00		0.34	1.00	1.00
Satd. Flow (perm)	1805	3610	1615	3502	3312	1615	608	3400		651	1900	1615
Peak-hour factor, PHF	1.00	1.00	1.00	1.00	1.00	1.00	1.00	1.00	1.00	1.00	1.00	1.00
Adj. Flow (vph)	150	1330	230	200	1545	185	205	190	120	285	335	120
RTOR Reduction (vph)	0	0	95	0	0	35	0	87	0	0	0	62
Lane Group Flow (vph)	150	1330	135	200	1545	150	205	223	0	285	335	58
Heavy Vehicles (%)	0%	0%	0%	0%	9%	0%	0%	0%	0%	0%	0%	0%
Turn Type	Prot		Perm	Prot		Perm	pm+pt			pm+pt		Perm
Protected Phases	5	2		1	6		7	4		3	8	
Permitted Phases			2			6	4			8		8
Actuated Green, G (s)	11.0	55.0	55.0	16.0	60.0	60.0	21.9	12.5		35.6	21.7	21.7
Effective Green, g (s)	11.0	56.4	56.4	16.0	61.4	61.4	21.9	13.0		35.6	22.2	21.7
Actuated g/C Ratio	0.09	0.47	0.47	0.13	0.51	0.51	0.18	0.11		0.30	0.18	0.18
Clearance Time (s)	4.0	5.4	5.4	4.0	5.4	5.4	4.0	4.5		4.0	4.5	4.5
Vehicle Extension (s)	2.3	4.5	4.5	2.3	4.5	4.5	2.3	2.3		2.3	2.3	2.3
Lane Grp Cap (vph)	165	1697	759	467	1695	826	205	368		372	352	292
v/s Ratio Prot	c0.08	0.37		0.06	c0.47		c0.08	0.07		0.12	c0.18	
v/s Ratio Perm			0.08			0.09	0.10			0.11		0.04
v/c Ratio	0.91	0.78	0.18	0.43	0.91	0.18	1.00	0.60		0.77	0.95	0.20
Uniform Delay, d1	54.0	26.7	18.4	47.8	26.8	15.8	52.0	51.0		41.6	48.4	41.8
Progression Factor	1.24	0.19	0.21	1.00	1.00	1.00	1.00	1.00		1.00	1.00	1.00
Incremental Delay, d2	36.7	2.9	0.4	0.4	8.9	0.5	62.9	2.2		8.5	35.2	0.2
Delay (s)	103.7	8.0	4.2	48.2	35.7	16.3	114.9	53.2		50.1	83.6	41.9
Level of Service	F	A	A	D	D	B	F	D		D	F	D
Approach Delay (s)		15.9			35.2			77.8			63.9	
Approach LOS		B			D			E			E	

Intersection Summary			
HCM Average Control Delay	37.3	HCM Level of Service	D
HCM Volume to Capacity ratio	0.93		
Actuated Cycle Length (s)	120.0	Sum of lost time (s)	16.0
Intersection Capacity Utilization	93.3%	ICU Level of Service	F
Analysis Period (min)	15		

c Critical Lane Group

Movement	EBL	EBT	EBR	WBL	WBT	WBR	NBL	NBT	NBR	SBL	SBT	SBR
Lane Configurations												
Volume (vph)	190	1200	370	400	1450	140	320	610	150	210	800	175
Ideal Flow (vphpl)	1900	1900	1900	1900	1900	1900	1900	1900	1900	1900	1900	1900
Total Lost time (s)	4.0	4.0	3.0	4.0	4.0	3.0	4.0	4.0	4.0	4.0	4.0	3.0
Lane Util. Factor	0.97	0.95	1.00	0.97	0.95	1.00	0.97	0.95	1.00	0.97	0.95	1.00
Frt	1.00	1.00	0.85	1.00	1.00	0.85	1.00	1.00	0.85	1.00	1.00	0.85
Flt Protected	0.95	1.00	1.00	0.95	1.00	1.00	0.95	1.00	1.00	0.95	1.00	1.00
Satd. Flow (prot)	3467	3610	1615	3502	3574	1615	3502	3610	1615	3502	3574	1615
Flt Permitted	0.95	1.00	1.00	0.95	1.00	1.00	0.95	1.00	1.00	0.95	1.00	1.00
Satd. Flow (perm)	3467	3610	1615	3502	3574	1615	3502	3610	1615	3502	3574	1615
Peak-hour factor, PHF	1.00	1.00	1.00	1.00	1.00	1.00	1.00	1.00	1.00	1.00	1.00	1.00
Adj. Flow (vph)	190	1200	370	400	1450	140	320	610	150	210	800	175
RTOR Reduction (vph)	0	0	6	0	0	15	0	0	19	0	0	11
Lane Group Flow (vph)	190	1200	364	400	1450	125	320	610	131	210	800	164
Heavy Vehicles (%)	1%	0%	0%	0%	1%	0%	0%	0%	0%	0%	1%	0%
Turn Type	Prot		pm+ov	Prot		pm+ov	Prot		pm+ov	Prot		pm+ov
Protected Phases	5	2	3	1	6	7	3	8	1	7	4	5
Permitted Phases			2			6			8			4
Actuated Green, G (s)	9.3	51.9	66.0	17.0	59.6	71.6	14.1	32.0	49.0	12.0	29.9	39.2
Effective Green, g (s)	8.8	52.4	67.0	16.5	60.1	72.6	13.6	32.5	48.0	11.5	30.4	40.2
Actuated g/C Ratio	0.07	0.41	0.52	0.13	0.47	0.56	0.11	0.25	0.37	0.09	0.24	0.31
Clearance Time (s)	3.5	4.5	3.5	3.5	4.5	3.5	3.5	4.5	3.5	3.5	4.5	3.5
Vehicle Extension (s)	2.3	4.3	2.3	2.3	4.3	2.3	2.3	2.3	2.3	2.3	2.3	2.3
Lane Grp Cap (vph)	237	1468	839	448	1666	910	369	910	601	312	843	504
v/s Ratio Prot	0.05	0.33	0.05	c0.11	c0.41	0.01	c0.09	0.17	0.03	0.06	c0.22	0.02
v/s Ratio Perm			0.18			0.06			0.05			0.08
v/c Ratio	0.80	0.82	0.43	0.89	0.87	0.14	0.87	0.67	0.22	0.67	0.95	0.33
Uniform Delay, d1	59.2	34.0	19.2	55.3	30.9	13.3	56.8	43.4	27.6	56.9	48.5	34.0
Progression Factor	1.00	1.00	1.00	1.00	1.00	1.00	1.00	1.00	1.00	1.00	1.00	1.00
Incremental Delay, d2	16.8	5.2	0.2	19.4	6.5	0.0	18.5	1.7	0.1	4.9	19.4	0.2
Delay (s)	76.0	39.2	19.4	74.8	37.4	13.4	75.3	45.1	27.7	61.7	67.9	34.2
Level of Service	E	D	B	E	D	B	E	D	C	E	E	C
Approach Delay (s)		39.0			43.2			51.6			61.8	
Approach LOS		D			D			D			E	

Intersection Summary			
HCM Average Control Delay	47.2	HCM Level of Service	D
HCM Volume to Capacity ratio	0.88		
Actuated Cycle Length (s)	128.9	Sum of lost time (s)	12.0
Intersection Capacity Utilization	90.1%	ICU Level of Service	E
Analysis Period (min)	15		

c Critical Lane Group

Movement	WBL	WBR	NBT	NBR	SBL	SBT
Lane Configurations						
Volume (vph)	250	55	365	220	180	630
Ideal Flow (vphpl)	1900	1900	1900	1900	1900	1900
Total Lost time (s)	4.0	4.0	4.0	4.0	4.0	4.0
Lane Util. Factor	1.00	1.00	1.00	1.00	1.00	1.00
Frt	1.00	0.85	1.00	0.85	1.00	1.00
Flt Protected	0.95	1.00	1.00	1.00	0.95	1.00
Satd. Flow (prot)	1805	1615	1900	1615	1805	1900
Flt Permitted	0.95	1.00	1.00	1.00	0.95	1.00
Satd. Flow (perm)	1805	1615	1900	1615	1805	1900
Peak-hour factor, PHF	1.00	1.00	1.00	1.00	1.00	1.00
Adj. Flow (vph)	250	55	365	220	180	630
RTOR Reduction (vph)	0	40	0	154	0	0
Lane Group Flow (vph)	250	15	365	66	180	630
Heavy Vehicles (%)	0%	0%	0%	0%	0%	0%
Turn Type		Prot		Perm	Prot	
Protected Phases	4	4	6		5	2
Permitted Phases				6		
Actuated Green, G (s)	13.2	13.2	14.3	14.3	11.0	30.3
Effective Green, g (s)	14.2	14.2	14.8	14.8	12.0	30.8
Actuated g/C Ratio	0.27	0.27	0.28	0.28	0.23	0.58
Clearance Time (s)	5.0	5.0	4.5	4.5	5.0	4.5
Vehicle Extension (s)	3.0	3.0	1.0	1.0	3.0	1.0
Lane Grp Cap (vph)	484	433	531	451	409	1104
v/s Ratio Prot	c0.14	0.01	c0.19		0.10	c0.33
v/s Ratio Perm				0.04		
v/c Ratio	0.52	0.03	0.69	0.15	0.44	0.57
Uniform Delay, d1	16.5	14.3	17.0	14.4	17.6	7.0
Progression Factor	1.00	1.00	1.00	1.00	1.00	1.00
Incremental Delay, d2	0.9	0.0	2.9	0.1	0.8	0.4
Delay (s)	17.4	14.4	20.0	14.4	18.4	7.4
Level of Service	B	B	B	B	B	A
Approach Delay (s)	16.9		17.9			9.8
Approach LOS	B		B			A

Intersection Summary			
HCM Average Control Delay	13.9	HCM Level of Service	B
HCM Volume to Capacity ratio	0.62		
Actuated Cycle Length (s)	53.0	Sum of lost time (s)	12.0
Intersection Capacity Utilization	53.7%	ICU Level of Service	A
Analysis Period (min)	15		

c Critical Lane Group

Movement	EBL	EBT	EBR	WBL	WBT	WBR	NBL	NBT	NBR	SBL	SBT	SBR
Lane Configurations												
Volume (vph)	70	195	65	45	30	210	10	200	50	205	475	120
Ideal Flow (vphpl)	1900	1900	1900	1900	1900	1900	1900	1900	1900	1900	1900	1900
Total Lost time (s)		4.0			4.0		4.0	4.0		4.0	4.0	
Lane Util. Factor		1.00			1.00		1.00	1.00		1.00	1.00	
Frt		0.97			0.90		1.00	0.97		1.00	0.97	
Flt Protected		0.99			0.99		0.95	1.00		0.95	1.00	
Satd. Flow (prot)		1790			1563		1444	1825		1752	1755	
Flt Permitted		0.88			0.92		0.39	1.00		0.43	1.00	
Satd. Flow (perm)		1591			1444		589	1825		792	1755	
Peak-hour factor, PHF	1.00	1.00	1.00	1.00	1.00	1.00	1.00	1.00	1.00	1.00	1.00	1.00
Adj. Flow (vph)	70	195	65	45	30	210	10	200	50	205	475	120
RTOR Reduction (vph)	0	11	0	0	132	0	0	14	0	0	12	0
Lane Group Flow (vph)	0	319	0	0	153	0	10	236	0	205	583	0
Heavy Vehicles (%)	4%	2%	1%	1%	3%	11%	25%	1%	1%	3%	6%	1%
Turn Type	Perm			Perm			pm+pt			pm+pt		
Protected Phases		8			4		1	6		5	2	
Permitted Phases	8			4			6			2		
Actuated Green, G (s)		15.2			15.2		16.3	15.8		28.1	23.6	
Effective Green, g (s)		15.2			15.2		16.3	15.8		28.1	23.6	
Actuated g/C Ratio		0.30			0.30		0.32	0.31		0.55	0.46	
Clearance Time (s)		4.0			4.0		4.0	4.0		4.0	4.0	
Vehicle Extension (s)		2.5			2.5		2.5	2.5		2.5	2.5	
Lane Grp Cap (vph)		471			428		195	562		589	807	
v/s Ratio Prot							0.00	0.13		c0.06	c0.33	
v/s Ratio Perm		c0.20			0.11		0.02			0.13		
v/c Ratio		0.68			0.36		0.05	0.42		0.35	0.72	
Uniform Delay, d1		15.9			14.2		12.1	14.1		6.3	11.2	
Progression Factor		1.00			1.00		1.00	1.00		1.00	1.00	
Incremental Delay, d2		3.5			0.4		0.1	0.4		0.3	3.0	
Delay (s)		19.4			14.6		12.1	14.5		6.6	14.2	
Level of Service		B			B		B	B		A	B	
Approach Delay (s)		19.4			14.6			14.4			12.3	
Approach LOS		B			B			B			B	

Intersection Summary			
HCM Average Control Delay	14.4	HCM Level of Service	B
HCM Volume to Capacity ratio	0.71		
Actuated Cycle Length (s)	51.3	Sum of lost time (s)	12.0
Intersection Capacity Utilization	72.6%	ICU Level of Service	C
Analysis Period (min)	15		

c Critical Lane Group

Movement	EBL	EBT	EBR	WBL	WBT	WBR	NBL	NBT	NBR	SBL	SBT	SBR
Lane Configurations												
Volume (veh/h)	5	495	55	105	250	5	45	5	35	5	5	5
Sign Control		Free			Free			Stop			Stop	
Grade		0%			0%			0%			0%	
Peak Hour Factor	1.00	1.00	1.00	1.00	1.00	1.00	1.00	1.00	1.00	1.00	1.00	1.00
Hourly flow rate (vph)	5	495	55	105	250	5	45	5	35	5	5	5
Pedestrians												
Lane Width (ft)												
Walking Speed (ft/s)												
Percent Blockage												
Right turn flare (veh)												
Median type		None			None							
Median storage veh)												
Upstream signal (ft)												
pX, platoon unblocked												
vC, conflicting volume	255			550			1000	998	522	1005	1022	252
vC1, stage 1 conf vol												
vC2, stage 2 conf vol												
vCu, unblocked vol	255			550			1000	998	522	1005	1022	252
tC, single (s)	4.1			4.1			7.1	6.5	6.2	7.1	6.5	6.2
tC, 2 stage (s)												
tF (s)	2.2			2.2			3.5	4.0	3.3	3.5	4.0	3.3
p0 queue free %	100			90			78	98	94	97	98	99
cM capacity (veh/h)	1310			1020			201	218	554	186	211	786

Direction, Lane #	EB 1	EB 2	WB 1	WB 2	NB 1	SB 1
Volume Total	5	550	105	255	85	15
Volume Left	5	0	105	0	45	5
Volume Right	0	55	0	5	35	5
cSH	1310	1700	1020	1700	274	263
Volume to Capacity	0.00	0.32	0.10	0.15	0.31	0.06
Queue Length 95th (ft)	0	0	9	0	32	5
Control Delay (s)	7.8	0.0	8.9	0.0	24.0	19.5
Lane LOS	A		A		C	C
Approach Delay (s)	0.1		2.6		24.0	19.5
Approach LOS					C	C

Intersection Summary			
Average Delay	3.3		
Intersection Capacity Utilization	54.4%	ICU Level of Service	A
Analysis Period (min)	15		

Movement	EBL	EBT	EBR	WBL	WBT	WBR	NBL	NBT	NBR	SBL	SBT	SBR
Lane Configurations												
Volume (vph)	295	285	50	80	250	195	10	375	10	345	1435	295
Ideal Flow (vphpl)	1900	1900	1900	1900	1900	1900	1900	1900	1900	1900	1900	1900
Total Lost time (s)	4.0	4.0		4.0	4.0		4.0	4.0		4.0	4.5	4.0
Lane Util. Factor	1.00	1.00		1.00	1.00		1.00	0.95		1.00	0.95	1.00
Frt	1.00	0.98		1.00	0.93		1.00	1.00		1.00	1.00	0.85
Flt Protected	0.95	1.00		0.95	1.00		0.95	1.00		0.95	1.00	1.00
Satd. Flow (prot)	1787	1839		1787	1758		1770	3525		1770	3539	1583
Flt Permitted	0.12	1.00		0.55	1.00		0.10	1.00		0.40	1.00	1.00
Satd. Flow (perm)	221	1839		1031	1758		190	3525		744	3539	1583
Peak-hour factor, PHF	1.00	1.00	1.00	1.00	1.00	1.00	1.00	1.00	1.00	1.00	1.00	1.00
Adj. Flow (vph)	295	285	50	80	250	195	10	375	10	345	1435	295
RTOR Reduction (vph)	0	5	0	0	23	0	0	1	0	0	0	78
Lane Group Flow (vph)	295	330	0	80	422	0	10	384	0	345	1435	217
Heavy Vehicles (%)	1%	1%	1%	1%	1%	1%	2%	2%	2%	2%	2%	2%
Turn Type	pm+pt			pm+pt			pm+pt			pm+pt		Perm
Protected Phases	3	8		7	4		1	6		5	2	
Permitted Phases	8			4			6			2		2
Actuated Green, G (s)	51.1	43.1		34.1	30.1		40.0	39.2		60.9	56.1	56.1
Effective Green, g (s)	51.1	43.1		34.1	30.1		40.0	39.2		60.9	55.6	56.1
Actuated g/C Ratio	0.43	0.36		0.28	0.25		0.33	0.33		0.51	0.46	0.47
Clearance Time (s)	4.0	4.0		4.0	4.0		4.0	4.0		4.0	4.0	4.0
Vehicle Extension (s)	2.5	2.5		2.5	2.5		2.5	2.5		2.5	2.5	2.5
Lane Grp Cap (vph)	316	661		318	441		74	1152		529	1640	740
v/s Ratio Prot	c0.13	0.18		0.01	0.24		0.00	0.11		c0.10	c0.41	
v/s Ratio Perm	c0.27			0.06			0.04			0.23		0.14
v/c Ratio	0.93	0.50		0.25	0.96		0.14	0.33		0.65	0.88	0.29
Uniform Delay, d1	34.0	30.0		32.2	44.3		29.5	30.5		18.8	29.1	19.7
Progression Factor	1.00	1.00		1.00	1.00		1.00	1.00		0.59	0.70	0.37
Incremental Delay, d2	33.5	0.4		0.3	31.6		0.6	0.8		0.7	2.0	0.3
Delay (s)	67.5	30.5		32.5	75.9		30.1	31.3		11.8	22.4	7.6
Level of Service	E	C		C	E		C	C		B	C	A
Approach Delay (s)		47.8			69.3			31.3			18.5	
Approach LOS		D			E			C			B	

Intersection Summary			
HCM Average Control Delay	32.4	HCM Level of Service	C
HCM Volume to Capacity ratio	0.90		
Actuated Cycle Length (s)	120.0	Sum of lost time (s)	12.5
Intersection Capacity Utilization	98.2%	ICU Level of Service	F
Analysis Period (min)	15		

c Critical Lane Group

Movement	EBL	EBT	EBR	WBL	WBT	WBR	NBL	NBT	NBR	SBL	SBT	SBR
Lane Configurations												
Volume (vph)	160	105	175	115	250	35	100	465	65	110	800	170
Ideal Flow (vphpl)	1900	1900	1900	1900	1900	1900	1900	1900	1900	1900	1900	1900
Total Lost time (s)	4.0	4.0		4.5	4.0		4.0	4.0		4.0	4.0	
Lane Util. Factor	1.00	1.00		1.00	1.00		1.00	0.95		1.00	0.95	
Frt	1.00	0.91		1.00	0.98		1.00	0.98		1.00	0.97	
Flt Protected	0.95	1.00		0.95	1.00		0.95	1.00		0.95	1.00	
Satd. Flow (prot)	1787	1705		1787	1847		1787	3509		1787	3480	
Flt Permitted	0.31	1.00		0.50	1.00		0.14	1.00		0.39	1.00	
Satd. Flow (perm)	592	1705		936	1847		259	3509		738	3480	
Peak-hour factor, PHF	1.00	1.00	1.00	1.00	1.00	1.00	1.00	1.00	1.00	1.00	1.00	1.00
Adj. Flow (vph)	160	105	175	115	250	35	100	465	65	110	800	170
RTOR Reduction (vph)	0	50	0	0	5	0	0	10	0	0	17	0
Lane Group Flow (vph)	160	230	0	115	280	0	100	520	0	110	953	0
Heavy Vehicles (%)	1%	1%	1%	1%	1%	1%	1%	1%	1%	1%	1%	1%
Turn Type	pm+pt			pm+pt			pm+pt			pm+pt		
Protected Phases	3	8		7	4		1	6		5	2	
Permitted Phases	8			4			6			2		
Actuated Green, G (s)	32.7	22.9		25.9	19.5		34.9	29.1		32.3	27.8	
Effective Green, g (s)	32.7	22.9		24.9	19.5		34.9	29.1		32.3	27.8	
Actuated g/C Ratio	0.41	0.29		0.32	0.25		0.44	0.37		0.41	0.35	
Clearance Time (s)	4.0	4.0		4.0	4.0		4.0	4.0		4.0	4.0	
Vehicle Extension (s)	2.5	2.5		2.5	2.5		2.5	2.5		2.5	2.5	
Lane Grp Cap (vph)	394	495		359	456		227	1294		362	1226	
v/s Ratio Prot	c0.05	0.13		0.02	c0.15		c0.03	0.15		0.02	c0.27	
v/s Ratio Perm	0.12			0.08			0.16			0.11		
v/c Ratio	0.41	0.46		0.32	0.62		0.44	0.40		0.30	0.78	
Uniform Delay, d1	15.7	23.0		19.8	26.4		15.3	18.5		14.8	22.8	
Progression Factor	1.00	1.00		1.00	1.00		1.00	1.00		1.00	1.00	
Incremental Delay, d2	0.5	0.5		0.4	2.1		1.0	0.1		0.3	3.0	
Delay (s)	16.2	23.5		20.2	28.5		16.3	18.6		15.1	25.8	
Level of Service	B	C		C	C		B	B		B	C	
Approach Delay (s)		20.8			26.1			18.2			24.7	
Approach LOS		C			C			B			C	

Intersection Summary			
HCM Average Control Delay	22.7	HCM Level of Service	C
HCM Volume to Capacity ratio	0.68		
Actuated Cycle Length (s)	78.9	Sum of lost time (s)	20.0
Intersection Capacity Utilization	70.6%	ICU Level of Service	C
Analysis Period (min)	15		

c Critical Lane Group

Movement	WBL	WBR	NBT	NBR	SBL	SBT
Lane Configurations						
Volume (veh/h)	120	25	250	55	105	580
Sign Control	Stop		Free			Free
Grade	0%		0%			0%
Peak Hour Factor	1.00	1.00	1.00	1.00	1.00	1.00
Hourly flow rate (vph)	120	25	250	55	105	580
Pedestrians						
Lane Width (ft)						
Walking Speed (ft/s)						
Percent Blockage						
Right turn flare (veh)						
Median type			TWLTL			None
Median storage veh)			2			
Upstream signal (ft)						
pX, platoon unblocked						
vC, conflicting volume	1068	278			305	
vC1, stage 1 conf vol	278					
vC2, stage 2 conf vol	790					
vCu, unblocked vol	1068	278			305	
tC, single (s)	6.4	6.2			4.1	
tC, 2 stage (s)	5.4					
tF (s)	3.5	3.3			2.2	
p0 queue free %	69	97			92	
cM capacity (veh/h)	387	764			1262	

Direction, Lane #	WB 1	WB 2	NB 1	SB 1
Volume Total	120	25	305	685
Volume Left	120	0	0	105
Volume Right	0	25	55	0
cSH	387	764	1700	1262
Volume to Capacity	0.31	0.03	0.18	0.08
Queue Length 95th (ft)	32	3	0	7
Control Delay (s)	18.4	9.9	0.0	2.1
Lane LOS	C	A		A
Approach Delay (s)	16.9		0.0	2.1
Approach LOS	C			

Intersection Summary			
Average Delay	3.4		
Intersection Capacity Utilization	70.7%	ICU Level of Service	C
Analysis Period (min)	15		

Movement	EBL	EBT	EBR	WBL	WBT	WBR	NBL	NBT	NBR	SBL	SBT	SBR
Lane Configurations												
Volume (vph)	50	200	50	60	105	80	45	255	30	280	1010	85
Ideal Flow (vphpl)	1900	1900	1900	1900	1900	1900	1900	1900	1900	1900	1900	1900
Total Lost time (s)	4.5	4.5		4.5	4.5		4.5	4.5		4.5	4.5	
Lane Util. Factor	1.00	1.00		1.00	1.00		1.00	0.95		1.00	0.95	
Frt	1.00	0.97		1.00	0.94		1.00	0.98		1.00	0.99	
Flt Protected	0.95	1.00		0.95	1.00		0.95	1.00		0.95	1.00	
Satd. Flow (prot)	1787	1825		1787	1759		1770	3483		1770	3498	
Flt Permitted	0.64	1.00		0.49	1.00		0.23	1.00		0.47	1.00	
Satd. Flow (perm)	1206	1825		931	1759		424	3483		878	3498	
Peak-hour factor, PHF	1.00	1.00	1.00	1.00	1.00	1.00	1.00	1.00	1.00	1.00	1.00	1.00
Adj. Flow (vph)	50	200	50	60	105	80	45	255	30	280	1010	85
RTOR Reduction (vph)	0	20	0	0	60	0	0	12	0	0	7	0
Lane Group Flow (vph)	50	230	0	60	125	0	45	273	0	280	1088	0
Heavy Vehicles (%)	1%	1%	1%	1%	1%	1%	2%	2%	2%	2%	2%	2%
Turn Type	Perm			Perm			pm+pt			pm+pt		
Protected Phases		8			4		1	6		5	2	
Permitted Phases	8			4			6			2		
Actuated Green, G (s)	10.5	10.5		10.5	10.5		22.1	20.6		30.6	25.1	
Effective Green, g (s)	10.0	10.0		10.0	10.0		21.1	20.1		30.1	24.6	
Actuated g/C Ratio	0.20	0.20		0.20	0.20		0.43	0.41		0.61	0.50	
Clearance Time (s)	4.0	4.0		4.0	4.0		4.0	4.0		4.0	4.0	
Vehicle Extension (s)	2.5	2.5		2.5	2.5		2.5	2.5		2.5	2.5	
Lane Grp Cap (vph)	246	372		190	358		210	1426		638	1753	
v/s Ratio Prot		c0.13			0.07		0.00	0.08		c0.05	c0.31	
v/s Ratio Perm	0.04			0.06			0.09			0.22		
v/c Ratio	0.20	0.62		0.32	0.35		0.21	0.19		0.44	0.62	
Uniform Delay, d1	16.2	17.8		16.6	16.8		8.3	9.3		4.6	8.9	
Progression Factor	1.00	1.00		1.00	1.00		1.00	1.00		1.00	1.00	
Incremental Delay, d2	0.3	2.6		0.7	0.4		0.4	0.3		0.4	1.7	
Delay (s)	16.5	20.4		17.3	17.2		8.6	9.6		5.0	10.5	
Level of Service	B	C		B	B		A	A		A	B	
Approach Delay (s)		19.8			17.2			9.5			9.4	
Approach LOS		B			B			A			A	

Intersection Summary			
HCM Average Control Delay	11.6	HCM Level of Service	B
HCM Volume to Capacity ratio	0.58		
Actuated Cycle Length (s)	49.1	Sum of lost time (s)	9.0
Intersection Capacity Utilization	65.9%	ICU Level of Service	C
Analysis Period (min)	15		

c Critical Lane Group

Movement	EBL	EBT	EBR	WBL	WBT	WBR	NBL	NBT	NBR	SBL	SBT	SBR
Lane Configurations												
Volume (vph)	75	200	150	70	135	55	70	465	45	150	735	165
Ideal Flow (vphpl)	1900	1900	1900	1900	1900	1900	1900	1900	1900	1900	1900	1900
Total Lost time (s)	4.0	4.0		4.0	4.0		4.0	4.0		4.0	4.0	
Lane Util. Factor	1.00	1.00		1.00	1.00		1.00	0.95		1.00	0.95	
Frt	1.00	0.94		1.00	0.96		1.00	0.99		1.00	0.97	
Flt Protected	0.95	1.00		0.95	1.00		0.95	1.00		0.95	1.00	
Satd. Flow (prot)	1787	1760		1787	1800		1787	3527		1787	3476	
Flt Permitted	0.64	1.00		0.40	1.00		0.26	1.00		0.34	1.00	
Satd. Flow (perm)	1200	1760		751	1800		495	3527		645	3476	
Peak-hour factor, PHF	1.00	1.00	1.00	1.00	1.00	1.00	1.00	1.00	1.00	1.00	1.00	1.00
Adj. Flow (vph)	75	200	150	70	135	55	70	465	45	150	735	165
RTOR Reduction (vph)	0	36	0	0	20	0	0	10	0	0	26	0
Lane Group Flow (vph)	75	314	0	70	170	0	70	500	0	150	874	0
Heavy Vehicles (%)	1%	1%	1%	1%	1%	1%	1%	1%	1%	1%	1%	1%
Turn Type	Perm			Perm			pm+pt			pm+pt		
Protected Phases		8			4		1	6		5	2	
Permitted Phases	8			4			6			2		
Actuated Green, G (s)	14.3	14.3		14.3	14.3		17.7	15.2		24.1	18.4	
Effective Green, g (s)	14.3	14.3		14.3	14.3		17.7	15.2		24.1	18.4	
Actuated g/C Ratio	0.30	0.30		0.30	0.30		0.37	0.32		0.51	0.39	
Clearance Time (s)	4.0	4.0		4.0	4.0		4.0	4.0		4.0	4.0	
Vehicle Extension (s)	2.5	2.5		2.5	2.5		2.5	2.5		2.5	2.5	
Lane Grp Cap (vph)	364	533		228	545		254	1136		467	1355	
v/s Ratio Prot		c0.18			0.09		0.01	0.14		c0.04	c0.25	
v/s Ratio Perm	0.06			0.09			0.09			0.13		
v/c Ratio	0.21	0.59		0.31	0.31		0.28	0.44		0.32	0.64	
Uniform Delay, d1	12.2	14.0		12.6	12.7		9.7	12.6		6.5	11.7	
Progression Factor	1.00	1.00		1.00	1.00		1.00	1.00		1.00	1.00	
Incremental Delay, d2	0.2	1.4		0.6	0.2		0.4	0.2		0.3	0.9	
Delay (s)	12.4	15.3		13.2	12.9		10.1	12.8		6.8	12.7	
Level of Service	B	B		B	B		B	B		A	B	
Approach Delay (s)		14.8			13.0			12.5			11.8	
Approach LOS		B			B			B			B	

Intersection Summary			
HCM Average Control Delay	12.7	HCM Level of Service	B
HCM Volume to Capacity ratio	0.62		
Actuated Cycle Length (s)	47.2	Sum of lost time (s)	12.0
Intersection Capacity Utilization	66.4%	ICU Level of Service	C
Analysis Period (min)	15		

c Critical Lane Group

Movement	EBL	EBT	EBR	WBL	WBT	WBR	NBL	NBT	NBR	SBL	SBT	SBR
Lane Configurations												
Volume (vph)	120	100	5	5	90	105	5	115	5	265	525	260
Ideal Flow (vphpl)	1900	1900	1900	1900	1900	1900	1900	1900	1900	1900	1900	1900
Total Lost time (s)		4.5			4.5		4.5	4.5		4.5	4.5	
Lane Util. Factor		1.00			1.00		1.00	0.95		1.00	0.95	
Frt		1.00			0.93		1.00	0.99		1.00	0.95	
Flt Protected		0.97			1.00		0.95	1.00		0.95	1.00	
Satd. Flow (prot)		1827			1746		1787	3552		1787	3397	
Flt Permitted		0.75			0.99		0.41	1.00		0.46	1.00	
Satd. Flow (perm)		1404			1733		776	3552		869	3397	
Peak-hour factor, PHF	1.00	1.00	1.00	1.00	1.00	1.00	1.00	1.00	1.00	1.00	1.00	1.00
Adj. Flow (vph)	120	100	5	5	90	105	5	115	5	265	525	260
RTOR Reduction (vph)	0	1	0	0	51	0	0	4	0	0	68	0
Lane Group Flow (vph)	0	224	0	0	149	0	5	116	0	265	717	0
Heavy Vehicles (%)	1%	1%	1%	1%	1%	1%	1%	1%	1%	1%	1%	1%
Turn Type	Perm			Perm			pm+pt			pm+pt		
Protected Phases		8			4		1	6		5	2	
Permitted Phases	8			4			6			2		
Actuated Green, G (s)		12.6			12.6		10.7	10.2		25.8	21.3	
Effective Green, g (s)		12.1			12.1		9.7	9.7		25.3	20.8	
Actuated g/C Ratio		0.26			0.26		0.21	0.21		0.55	0.45	
Clearance Time (s)		4.0			4.0		4.0	4.0		4.0	4.0	
Vehicle Extension (s)		2.5			2.5		2.5	2.5		2.5	2.5	
Lane Grp Cap (vph)		366			452		162	743		693	1523	
v/s Ratio Prot								0.03		c0.09	c0.21	
v/s Ratio Perm		c0.16			0.09		0.01			0.12		
v/c Ratio		0.61			0.33		0.03	0.16		0.38	0.47	
Uniform Delay, d1		15.1			13.9		14.6	15.0		5.9	8.9	
Progression Factor		1.00			1.00		1.00	1.00		1.00	1.00	
Incremental Delay, d2		2.6			0.3		0.1	0.1		0.3	0.2	
Delay (s)		17.7			14.2		14.7	15.1		6.2	9.1	
Level of Service		B			B		B	B		A	A	
Approach Delay (s)		17.7			14.2			15.1			8.4	
Approach LOS		B			B			B			A	

Intersection Summary			
HCM Average Control Delay	10.9	HCM Level of Service	B
HCM Volume to Capacity ratio	0.55		
Actuated Cycle Length (s)	46.4	Sum of lost time (s)	13.5
Intersection Capacity Utilization	57.7%	ICU Level of Service	B
Analysis Period (min)	15		

c Critical Lane Group

Movement	EBL	EBT	EBR	WBL	WBT	WBR	NBL	NBT	NBR	SBL	SBT	SBR
Lane Configurations												
Volume (vph)	85	125	70	10	140	20	30	405	30	70	685	180
Ideal Flow (vphpl)	1900	1900	1900	1900	1900	1900	1900	1900	1900	1900	1900	1900
Total Lost time (s)		4.5			4.5		4.5	4.5		4.5	4.5	
Lane Util. Factor		1.00			1.00		1.00	0.95		1.00	0.95	
Frt		0.97			0.98		1.00	0.99		1.00	0.97	
Flt Protected		0.99			1.00		0.95	1.00		0.95	1.00	
Satd. Flow (prot)		1773			1831		1770	3537		1787	3456	
Flt Permitted		0.87			0.97		0.26	1.00		0.47	1.00	
Satd. Flow (perm)		1566			1789		484	3537		887	3456	
Peak-hour factor, PHF	1.00	1.00	1.00	1.00	1.00	1.00	1.00	1.00	1.00	1.00	1.00	1.00
Adj. Flow (vph)	85	125	70	10	140	20	30	405	30	70	685	180
RTOR Reduction (vph)	0	19	0	0	7	0	0	8	0	0	36	0
Lane Group Flow (vph)	0	261	0	0	163	0	30	427	0	70	829	0
Heavy Vehicles (%)	2%	2%	2%	1%	2%	1%	2%	1%	1%	1%	1%	2%
Turn Type	Perm			Perm			pm+pt			pm+pt		
Protected Phases		8			4		1	6		5	2	
Permitted Phases	8			4			6			2		
Actuated Green, G (s)		12.3			12.3		17.1	15.9		18.9	16.8	
Effective Green, g (s)		11.8			11.8		16.1	15.4		17.9	16.3	
Actuated g/C Ratio		0.28			0.28		0.38	0.36		0.42	0.39	
Clearance Time (s)		4.0			4.0		4.0	4.0		4.0	4.0	
Vehicle Extension (s)		2.5			2.5		2.5	2.5		2.5	2.5	
Lane Grp Cap (vph)		437			499		205	1288		409	1332	
v/s Ratio Prot							0.00	0.12		c0.01	c0.24	
v/s Ratio Perm		c0.17			0.09		0.05			0.07		
v/c Ratio		0.60			0.33		0.15	0.33		0.17	0.62	
Uniform Delay, d1		13.2			12.1		8.4	9.7		7.3	10.5	
Progression Factor		1.00			1.00		1.00	1.00		1.00	1.00	
Incremental Delay, d2		1.8			0.3		0.2	0.1		0.1	0.8	
Delay (s)		15.0			12.4		8.6	9.8		7.5	11.3	
Level of Service		B			B		A	A		A	B	
Approach Delay (s)		15.0			12.4			9.8			11.0	
Approach LOS		B			B			A			B	

Intersection Summary			
HCM Average Control Delay	11.4	HCM Level of Service	B
HCM Volume to Capacity ratio	0.52		
Actuated Cycle Length (s)	42.3	Sum of lost time (s)	9.0
Intersection Capacity Utilization	67.7%	ICU Level of Service	C
Analysis Period (min)	15		

c Critical Lane Group

Movement	EBL	EBT	WBT	WBR	SBL	SBR
Lane Configurations						
Volume (veh/h)	35	375	190	80	85	25
Sign Control		Free	Free		Stop	
Grade		0%	0%		0%	
Peak Hour Factor	1.00	1.00	1.00	1.00	1.00	1.00
Hourly flow rate (vph)	35	375	190	80	85	25
Pedestrians						
Lane Width (ft)						
Walking Speed (ft/s)						
Percent Blockage						
Right turn flare (veh)						
Median type		None	None			
Median storage veh)						
Upstream signal (ft)						
pX, platoon unblocked						
vC, conflicting volume	270				675	230
vC1, stage 1 conf vol						
vC2, stage 2 conf vol						
vCu, unblocked vol	270				675	230
tC, single (s)	4.1				6.4	6.2
tC, 2 stage (s)						
tF (s)	2.2				3.5	3.3
p0 queue free %	97				79	97
cM capacity (veh/h)	1299				410	812

Direction, Lane #	EB 1	EB 2	WB 1	SB 1
Volume Total	35	375	270	110
Volume Left	35	0	0	85
Volume Right	0	0	80	25
cSH	1299	1700	1700	462
Volume to Capacity	0.03	0.22	0.16	0.24
Queue Length 95th (ft)	2	0	0	23
Control Delay (s)	7.8	0.0	0.0	15.2
Lane LOS	A			C
Approach Delay (s)	0.7		0.0	15.2
Approach LOS				C

Intersection Summary			
Average Delay	2.5		
Intersection Capacity Utilization	35.7%	ICU Level of Service	A
Analysis Period (min)	15		

Movement	EBL	EBT	EBR	WBL	WBT	WBR	NBL	NBT	NBR	SBL	SBT	SBR
Lane Configurations												
Volume (vph)	65	25	615	55	30	25	295	640	10	20	805	25
Ideal Flow (vphpl)	1900	1900	1900	1900	1900	1900	1900	1900	1900	1900	1900	1900
Total Lost time (s)		4.0	4.0		4.0		4.0	4.0		4.0	4.0	
Lane Util. Factor		1.00	1.00		1.00		1.00	0.95		1.00	0.95	
Frt		1.00	0.85		0.97		1.00	1.00		1.00	1.00	
Flt Protected		0.97	1.00		0.98		0.95	1.00		0.95	1.00	
Satd. Flow (prot)		1816	1599		1779		1787	3566		1787	3558	
Flt Permitted		0.66	1.00		0.69		0.25	1.00		0.40	1.00	
Satd. Flow (perm)		1233	1599		1267		463	3566		762	3558	
Peak-hour factor, PHF	1.00	1.00	1.00	1.00	1.00	1.00	1.00	1.00	1.00	1.00	1.00	1.00
Adj. Flow (vph)	65	25	615	55	30	25	295	640	10	20	805	25
RTOR Reduction (vph)	0	0	31	0	10	0	0	1	0	0	1	0
Lane Group Flow (vph)	0	90	584	0	100	0	295	649	0	20	829	0
Heavy Vehicles (%)	1%	1%	1%	1%	1%	1%	1%	1%	1%	1%	1%	1%
Turn Type	Perm		pm+ov	Perm			pm+pt			pm+pt		
Protected Phases		8	1		4		1	6		5	2	
Permitted Phases	8		8	4			6			2		
Actuated Green, G (s)		12.9	45.2		12.9		99.1	92.9		65.0	62.8	
Effective Green, g (s)		12.9	45.2		12.9		99.1	92.9		65.0	62.8	
Actuated g/C Ratio		0.11	0.38		0.11		0.83	0.77		0.54	0.52	
Clearance Time (s)		4.0	4.0		4.0		4.0	4.0		4.0	4.0	
Vehicle Extension (s)		2.5	2.5		2.5		2.5	2.5		2.5	2.5	
Lane Grp Cap (vph)		133	656		136		739	2761		432	1862	
v/s Ratio Prot			c0.24				0.11	0.18		0.00	c0.23	
v/s Ratio Perm		0.07	0.13		0.08		0.22			0.02		
v/c Ratio		0.68	0.89		0.74		0.40	0.24		0.05	0.44	
Uniform Delay, d1		51.5	35.1		51.9		4.8	3.7		12.9	17.8	
Progression Factor		1.00	1.00		1.00		1.00	1.00		1.00	1.00	
Incremental Delay, d2		11.7	13.9		17.7		0.3	0.2		0.0	0.8	
Delay (s)		63.2	49.0		69.6		5.0	3.9		13.0	18.5	
Level of Service		E	D		E		A	A		B	B	
Approach Delay (s)		50.8			69.6			4.3			18.4	
Approach LOS		D			E			A			B	

Intersection Summary			
HCM Average Control Delay	24.2	HCM Level of Service	C
HCM Volume to Capacity ratio	0.64		
Actuated Cycle Length (s)	120.0	Sum of lost time (s)	8.0
Intersection Capacity Utilization	77.3%	ICU Level of Service	D
Analysis Period (min)	15		

c Critical Lane Group

Movement	EBL	EBT	EBR	WBL	WBT	WBR	NBL	NBT	NBR	SBL	SBT	SBR
Lane Configurations												
Volume (vph)	235	445	20	50	515	465	15	245	75	585	580	310
Ideal Flow (vphpl)	1900	1900	1900	1900	1900	1900	1900	1900	1900	1900	1900	1900
Total Lost time (s)	4.0	4.0		4.0	4.0	4.0	4.0	4.0		4.0	4.0	6.5
Lane Util. Factor	1.00	1.00		1.00	1.00	1.00	1.00	1.00		0.97	1.00	1.00
Frt	1.00	0.99		1.00	1.00	0.85	1.00	0.96		1.00	1.00	0.85
Flt Protected	0.95	1.00		0.95	1.00	1.00	0.95	1.00		0.95	1.00	1.00
Satd. Flow (prot)	1805	1888		1805	1900	1615	1805	1833		3502	1900	1615
Flt Permitted	0.95	1.00		0.95	1.00	1.00	0.95	1.00		0.95	1.00	1.00
Satd. Flow (perm)	1805	1888		1805	1900	1615	1805	1833		3502	1900	1615
Peak-hour factor, PHF	1.00	1.00	1.00	1.00	1.00	1.00	1.00	1.00	1.00	1.00	1.00	1.00
Adj. Flow (vph)	235	445	20	50	515	465	15	245	75	585	580	310
RTOR Reduction (vph)	0	1	0	0	0	99	0	9	0	0	0	194
Lane Group Flow (vph)	235	464	0	50	515	366	15	311	0	585	580	116
Heavy Vehicles (%)	0%	0%	0%	0%	0%	0%	0%	0%	0%	0%	0%	0%
Turn Type	Prot			Prot		pm+ov	Prot			Prot		Perm
Protected Phases	5	2		1	6	7	3	8		7	4	
Permitted Phases						6						4
Actuated Green, G (s)	15.5	44.4		4.6	33.5	53.7	1.9	24.6		20.2	42.9	42.9
Effective Green, g (s)	17.5	46.4		6.6	35.5	57.7	3.9	26.6		22.2	44.9	42.4
Actuated g/C Ratio	0.15	0.39		0.06	0.30	0.49	0.03	0.23		0.19	0.38	0.36
Clearance Time (s)	6.0	6.0		6.0	6.0	6.0	6.0	6.0		6.0	6.0	6.0
Vehicle Extension (s)	2.4	2.7		2.7	2.7	2.6	2.6	2.5		2.6	2.5	2.5
Lane Grp Cap (vph)	268	744		101	573	846	60	414		660	724	581
v/s Ratio Prot	c0.13	0.25		0.03	c0.27	0.08	0.01	0.17		c0.17	c0.31	
v/s Ratio Perm						0.14						0.07
v/c Ratio	0.88	0.62		0.50	0.90	0.43	0.25	0.75		0.89	0.80	0.20
Uniform Delay, d1	49.1	28.7		54.0	39.4	19.4	55.5	42.5		46.6	32.5	26.0
Progression Factor	1.00	1.00		1.00	1.00	1.00	1.00	1.00		1.00	1.00	1.00
Incremental Delay, d2	25.6	1.5		3.2	16.8	0.3	1.7	7.2		13.5	6.2	0.1
Delay (s)	74.7	30.2		57.2	56.2	19.7	57.2	49.7		60.1	38.7	26.1
Level of Service	E	C		E	E	B	E	D		E	D	C
Approach Delay (s)		45.1			39.8			50.1			44.5	
Approach LOS		D			D			D			D	

Intersection Summary			
HCM Average Control Delay	43.8	HCM Level of Service	D
HCM Volume to Capacity ratio	0.85		
Actuated Cycle Length (s)	117.8	Sum of lost time (s)	12.0
Intersection Capacity Utilization	88.2%	ICU Level of Service	E
Analysis Period (min)	15		

c Critical Lane Group

Movement	EBL	EBT	EBR	WBL	WBT	WBR	NBL	NBT	NBR	SBL	SBT	SBR
Lane Configurations												
Volume (vph)	145	960	5	5	1125	315	5	5	5	270	5	110
Ideal Flow (vphpl)	1900	1900	1900	1900	1900	1900	1900	1900	1900	1900	1900	1900
Total Lost time (s)	4.0	4.0		4.0	4.0			4.0			4.0	4.0
Lane Util. Factor	1.00	0.95		1.00	0.95			1.00			1.00	1.00
Frt	1.00	1.00		1.00	0.97			0.95			1.00	0.85
Flt Protected	0.95	1.00		0.95	1.00			0.98			0.95	1.00
Satd. Flow (prot)	1805	3607		1805	3492			1785			1811	1615
Flt Permitted	0.95	1.00		0.95	1.00			1.00			0.95	1.00
Satd. Flow (perm)	1805	3607		1805	3492			1814			1811	1615
Peak-hour factor, PHF	1.00	1.00	1.00	1.00	1.00	1.00	1.00	1.00	1.00	1.00	1.00	1.00
Adj. Flow (vph)	145	960	5	5	1125	315	5	5	5	270	5	110
RTOR Reduction (vph)	0	0	0	0	21	0	0	5	0	0	0	88
Lane Group Flow (vph)	145	965	0	5	1419	0	0	10	0	0	275	22
Heavy Vehicles (%)	0%	0%	0%	0%	0%	0%	0%	0%	0%	0%	0%	0%
Turn Type	Prot			Prot			Perm			Split		Perm
Protected Phases	5	2		1	6			8		4	4	
Permitted Phases							8					4
Actuated Green, G (s)	11.5	60.4		0.8	48.7			1.6			18.9	18.9
Effective Green, g (s)	13.5	62.4		1.8	50.7			2.6			20.9	20.9
Actuated g/C Ratio	0.13	0.60		0.02	0.49			0.03			0.20	0.20
Clearance Time (s)	6.0	6.0		5.0	6.0			5.0			6.0	6.0
Vehicle Extension (s)	2.4	2.7		2.4	2.7			2.5			2.5	2.5
Lane Grp Cap (vph)	235	2170		31	1707			45			365	325
v/s Ratio Prot	c0.08	0.27		0.00	c0.41						c0.15	
v/s Ratio Perm								c0.01				0.01
v/c Ratio	0.62	0.44		0.16	0.83			0.23			0.75	0.07
Uniform Delay, d1	42.7	11.2		50.2	22.8			49.6			39.0	33.5
Progression Factor	1.00	1.00		1.00	1.00			1.00			1.00	1.00
Incremental Delay, d2	3.9	0.1		1.6	3.6			1.8			8.1	0.1
Delay (s)	46.6	11.3		51.8	26.4			51.4			47.1	33.6
Level of Service	D	B		D	C			D			D	C
Approach Delay (s)		16.0			26.5			51.4			43.2	
Approach LOS		B			C			D			D	

Intersection Summary			
HCM Average Control Delay	24.8	HCM Level of Service	C
HCM Volume to Capacity ratio	0.76		
Actuated Cycle Length (s)	103.7	Sum of lost time (s)	16.0
Intersection Capacity Utilization	81.1%	ICU Level of Service	D
Analysis Period (min)	15		

c Critical Lane Group

Movement	EBL	EBT	EBR	WBL	WBT	WBR	NBL	NBT	NBR	SBL	SBT	SBR
Lane Configurations												
Volume (vph)	210	755	235	160	1135	110	260	365	70	225	695	340
Ideal Flow (vphpl)	1900	1900	1900	1900	1900	1900	1900	1900	1900	1900	1900	1900
Total Lost time (s)	4.0	4.0		4.0	4.0		4.0	4.0		4.0	4.0	
Lane Util. Factor	1.00	0.95		1.00	0.95		1.00	0.95		1.00	0.95	
Frt	1.00	0.96		1.00	0.99		1.00	0.98		1.00	0.95	
Flt Protected	0.95	1.00		0.95	1.00		0.95	1.00		0.95	1.00	
Satd. Flow (prot)	1805	3481		1805	3562		1805	3523		1805	3432	
Flt Permitted	0.95	1.00		0.95	1.00		0.12	1.00		0.35	1.00	
Satd. Flow (perm)	1805	3481		1805	3562		232	3523		674	3432	
Peak-hour factor, PHF	1.00	1.00	1.00	1.00	1.00	1.00	1.00	1.00	1.00	1.00	1.00	1.00
Adj. Flow (vph)	210	755	235	160	1135	110	260	365	70	225	695	340
RTOR Reduction (vph)	0	25	0	0	6	0	0	13	0	0	50	0
Lane Group Flow (vph)	210	965	0	160	1239	0	260	422	0	225	985	0
Heavy Vehicles (%)	0%	0%	0%	0%	0%	0%	0%	0%	0%	0%	0%	0%
Turn Type	Prot			Prot			pm+pt			pm+pt		
Protected Phases	5	2		1	6		3	8		7	4	
Permitted Phases							8			4		
Actuated Green, G (s)	13.0	42.8		12.5	42.3		43.7	31.7		45.9	32.8	
Effective Green, g (s)	14.0	43.3		13.5	42.8		45.7	32.2		47.9	33.3	
Actuated g/C Ratio	0.12	0.36		0.11	0.36		0.38	0.27		0.40	0.28	
Clearance Time (s)	5.0	4.5		5.0	4.5		5.0	4.5		5.0	4.5	
Vehicle Extension (s)	3.0	1.0		3.0	1.0		3.0	1.0		3.0	1.0	
Lane Grp Cap (vph)	212	1266		205	1280		261	952		405	960	
v/s Ratio Prot	c0.12	0.28		0.09	c0.35		c0.11	0.12		0.07	c0.29	
v/s Ratio Perm							0.27			0.16		
v/c Ratio	0.99	0.76		0.78	0.97		1.00	0.44		0.56	1.03	
Uniform Delay, d1	52.5	33.4		51.4	37.5		32.9	36.0		24.8	42.9	
Progression Factor	1.00	1.00		1.00	1.00		1.00	1.00		1.00	1.00	
Incremental Delay, d2	58.9	2.5		17.3	17.6		54.3	0.1		1.7	35.9	
Delay (s)	111.4	35.9		68.7	55.1		87.2	36.1		26.5	78.8	
Level of Service	F	D		E	E		F	D		C	E	
Approach Delay (s)		49.1			56.7			55.3			69.5	
Approach LOS		D			E			E			E	

Intersection Summary			
HCM Average Control Delay	58.0	HCM Level of Service	E
HCM Volume to Capacity ratio	0.96		
Actuated Cycle Length (s)	119.1	Sum of lost time (s)	12.0
Intersection Capacity Utilization	104.3%	ICU Level of Service	G
Analysis Period (min)	15		

c Critical Lane Group

Movement	EBL	EBT	EBR	WBL	WBT	WBR	NBL	NBT	NBR	SBL	SBT	SBR
Lane Configurations												
Volume (vph)	5	75	200	30	205	225	150	250	10	215	445	90
Ideal Flow (vphpl)	1900	1900	1900	1900	1900	1900	1900	1900	1900	1900	1900	1900
Total Lost time (s)	4.5	4.5		4.5	4.5		4.5	4.5		4.5	4.5	4.5
Lane Util. Factor	1.00	1.00		1.00	1.00		1.00	1.00		1.00	1.00	1.00
Frt	1.00	0.89		1.00	0.92		1.00	0.99		1.00	1.00	0.85
Flt Protected	0.95	1.00		0.95	1.00		0.95	1.00		0.95	1.00	1.00
Satd. Flow (prot)	1770	1660		1770	1717		1770	1852		1770	1863	1583
Flt Permitted	0.27	1.00		0.46	1.00		0.25	1.00		0.42	1.00	1.00
Satd. Flow (perm)	503	1660		862	1717		465	1852		789	1863	1583
Peak-hour factor, PHF	1.00	1.00	1.00	1.00	1.00	1.00	1.00	1.00	1.00	1.00	1.00	1.00
Adj. Flow (vph)	5	75	200	30	205	225	150	250	10	215	445	90
RTOR Reduction (vph)	0	82	0	0	32	0	0	1	0	0	0	63
Lane Group Flow (vph)	5	193	0	30	398	0	150	259	0	215	445	27
Turn Type	pm+pt			pm+pt			pm+pt			pm+pt		Perm
Protected Phases	3	8		7	4		1	6		5	2	
Permitted Phases	8			4			6			2		2
Actuated Green, G (s)	21.9	21.2		22.9	21.7		27.9	18.8		31.9	20.8	20.8
Effective Green, g (s)	20.9	20.7		21.9	21.2		26.9	18.3		30.9	20.3	20.3
Actuated g/C Ratio	0.31	0.30		0.32	0.31		0.39	0.27		0.45	0.30	0.30
Clearance Time (s)	4.0	4.0		4.0	4.0		4.0	4.0		4.0	4.0	4.0
Vehicle Extension (s)	2.5	2.5		2.5	2.5		2.5	2.5		2.5	2.5	2.5
Lane Grp Cap (vph)	158	503		286	533		347	496		509	554	470
v/s Ratio Prot	0.00	0.12		c0.00	c0.23		0.05	0.14		c0.07	c0.24	
v/s Ratio Perm	0.01			0.03			0.12			0.13		0.02
v/c Ratio	0.03	0.38		0.10	0.75		0.43	0.52		0.42	0.80	0.06
Uniform Delay, d1	17.2	18.8		16.6	21.1		14.5	21.3		12.0	22.2	17.2
Progression Factor	1.00	1.00		1.00	1.00		1.00	1.00		1.00	1.00	1.00
Incremental Delay, d2	0.1	0.4		0.1	5.3		0.6	0.8		0.4	8.0	0.0
Delay (s)	17.3	19.1		16.7	26.5		15.1	22.0		12.4	30.2	17.2
Level of Service	B	B		B	C		B	C		B	C	B
Approach Delay (s)		19.1			25.8			19.5			23.5	
Approach LOS		B			C			B			C	

Intersection Summary			
HCM Average Control Delay	22.6	HCM Level of Service	C
HCM Volume to Capacity ratio	0.62		
Actuated Cycle Length (s)	68.3	Sum of lost time (s)	9.0
Intersection Capacity Utilization	67.9%	ICU Level of Service	C
Analysis Period (min)	15		
c Critical Lane Group			

General & Site Information

Analyst:	CMG
Agency/Company:	David Evans and Associates, Inc.
Date:	7/16/2012
Project Name:	South Hillsboro Focus Area Plan
Intersection:	Alexander at Brookwood
Analysis Time Period:	AM Peak Hour
Jurisdiction:	City of Hillsboro
Year:	2035 with South Hillsboro

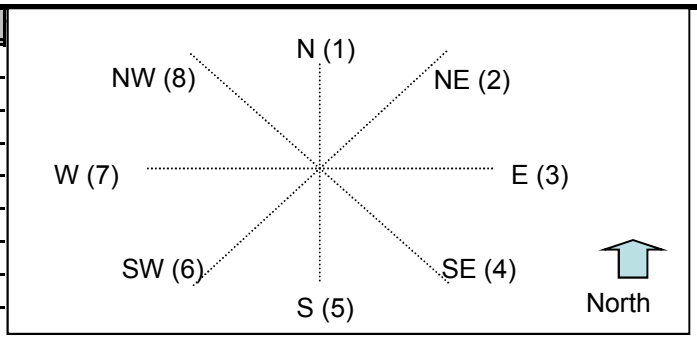

Volumes		Roundabout Approach/Entry Legs							
		N (1)	NE (2)	E (3)	SE (4)	S (5)	SW (6)	W (7)	NW (8)
Input Volumes to Leg #	N (1), vph	185		225		345		210	
	NE (2), vph								
	E (3), vph	110				45		95	
	SE (4), vph								
	S (5), vph	200		10				5	
	SW (6), vph								
	W (7), vph	35		25		5			
	NW (8), vph								
Output	Total Vehicles	530	0	260	0	395	0	310	0

Volume Characteristics	N	NE	E	SE	S	SW	W	NW
% Trucks	0.0	0.0	0.0	0.0	0.0	0.0	0.0	0.0
E_t	2.0	2.0	2.0	2.0	2.0	2.0	2.0	2.0
PHF	1.00	1.00	1.00	1.00	1.00	1.00	1.00	1.00
F_{HV}	1.000	1.000	1.000	1.000	1.000	1.000	1.000	1.000

Entry/Conflicting Flows	N	NE	E	SE	S	SW	W	NW
Flow to Leg # N (1), pcu/h	185	0	225	0	345	0	210	0
NE (2), pcu/h	0	0	0	0	0	0	0	0
E (3), pcu/h	110	0	0	0	45	0	95	0
SE (4), pcu/h	0	0	0	0	0	0	0	0
S (5), pcu/h	200	0	10	0	0	0	5	0
SW (6), pcu/h	0	0	0	0	0	0	0	0
W (7), pcu/h	35	0	25	0	5	0	0	0
NW (8), pcu/h	0	0	0	0	0	0	0	0
Entry flow, pcu/h	530	0	260	0	395	0	310	0
Conflicting flow, pcu/h	40	1005	745	995	600	815	505	570

Results	N	NE	E	SE	S	SW	W	NW
Entry Capacity, pcu/h	1086	NA	536	NA	620	NA	682	NA
Leg v/c ratio	0.49		0.48		0.64		0.45	
Control Delay, s/pcu	6.4		12.9		15.4		9.6	
LOS	A		B		C		A	
95th Percentile Queue (ft)	817	0	401	0	609	0	478	0

General & Site Information

Analyst:	CMG
Agency/Company:	David Evans and Associates, Inc.
Date:	7/16/2012
Project Name:	South Hillsboro Focus Area Plan
Intersection:	Rosa at 229th
Analysis Time Period:	PM Peak Hour
Jurisdiction:	City of Hillsboro
Year:	2035 with SoHi

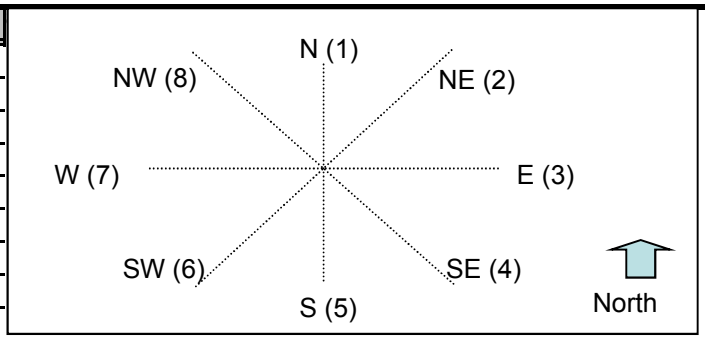

Volumes

		Roundabout Approach/Entry Legs							
		N (1)	NE (2)	E (3)	SE (4)	S (5)	SW (6)	W (7)	NW (8)
Input Volumes to Leg #	N (1), vph			125		85			
	NE (2), vph								
	E (3), vph	175				10			
	SE (4), vph								
	S (5), vph	185		10					
	SW (6), vph								
	W (7), vph								
	NW (8), vph								
Output	Total Vehicles	360	0	135	0	95	0	0	0

Volume Characteristics	N	NE	E	SE	S	SW	W	NW
% Trucks	1.0	1.0	1.0	1.0	1.0	1.0	1.0	1.0
E_t	2.0	2.0	2.0	2.0	2.0	2.0	2.0	2.0
PHF	1.00	1.00	1.00	1.00	1.00	1.00	1.00	1.00
F_{HV}	0.990	0.990	0.990	0.990	0.990	0.990	0.990	0.990

Entry/Conflicting Flows	N	NE	E	SE	S	SW	W	NW
Flow to Leg # N (1), pcu/h	0	0	126	0	86	0	0	0
NE (2), pcu/h	0	0	0	0	0	0	0	0
E (3), pcu/h	177	0	0	0	10	0	0	0
SE (4), pcu/h	0	0	0	0	0	0	0	0
S (5), pcu/h	187	0	10	0	0	0	0	0
SW (6), pcu/h	0	0	0	0	0	0	0	0
W (7), pcu/h	0	0	0	0	0	0	0	0
NW (8), pcu/h	0	0	0	0	0	0	0	0
Entry flow, pcu/h	364	0	136	0	96	0	0	0
Conflicting flow, pcu/h	10	222	86	273	177	374	374	374

Results	N	NE	E	SE	S	SW	W	NW
Entry Capacity, pcu/h	1119	NA	1037	NA	947	NA	NA	NA
Leg v/c ratio	0.33		0.13		0.10			
Control Delay, s/pcu	4.8		4.0		4.2			
LOS	A		A		A			
95th Percentile Queue (ft)	564	0	211	0	149	0	0	0

General & Site Information

Analyst:	CMG
Agency/Company:	David Evans and Associates, Inc.
Date:	7/16/2012
Project Name:	South Hillsboro Focus Area Plan
Intersection:	Rosedale at River
Analysis Time Period:	PM Peak Hour
Jurisdiction:	City of Hillsboro
Year:	2035 with SoHi

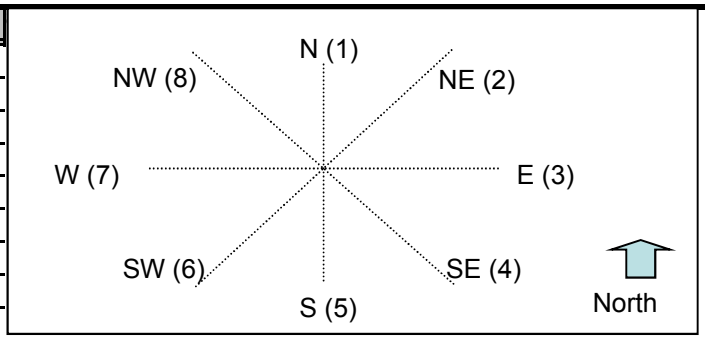

Volumes

		Roundabout Approach/Entry Legs							
		N (1)	NE (2)	E (3)	SE (4)	S (5)	SW (6)	W (7)	NW (8)
Input Volumes to Leg #	N (1), vph			160		385			
	NE (2), vph								
	E (3), vph	270				140			
	SE (4), vph								
	S (5), vph	580		95					
	SW (6), vph								
	W (7), vph								
	NW (8), vph								
Output	Total Vehicles	850	0	255	0	525	0	0	0

Volume Characteristics	N	NE	E	SE	S	SW	W	NW
% Trucks	1.0	0.0	1.0	0.0	1.0	0.0	0.0	0.0
E_t	2.0	2.0	2.0	2.0	2.0	2.0	2.0	2.0
PHF	1.00	1.00	1.00	1.00	1.00	1.00	1.00	1.00
F_{HV}	0.990	1.000	0.990	1.000	0.990	1.000	1.000	1.000

Entry/Conflicting Flows	N	NE	E	SE	S	SW	W	NW
Flow to Leg # N (1), pcu/h	0	0	162	0	389	0	0	0
NE (2), pcu/h	0	0	0	0	0	0	0	0
E (3), pcu/h	273	0	0	0	141	0	0	0
SE (4), pcu/h	0	0	0	0	0	0	0	0
S (5), pcu/h	586	0	96	0	0	0	0	0
SW (6), pcu/h	0	0	0	0	0	0	0	0
W (7), pcu/h	0	0	0	0	0	0	0	0
NW (8), pcu/h	0	0	0	0	0	0	0	0
Entry flow, pcu/h	859	0	258	0	530	0	0	0
Conflicting flow, pcu/h	96	646	389	803	273	954	954	954

Results	N	NE	E	SE	S	SW	W	NW
Entry Capacity, pcu/h	1027	NA	766	NA	860	NA	NA	NA
Leg v/c ratio	0.84		0.34		0.62			
Control Delay, s/pcu	18.4		7.1		10.7			
LOS	C		A		B			
95th Percentile Queue (ft)	1331	0	399	0	822	0	0	0

General & Site Information

Analyst:	CMG
Agency/Company:	David Evans and Associates, Inc.
Date:	7/16/2012
Project Name:	South Hillsboro Focus Area Plan
Intersection:	Rosedale at Cornelius Pass
Analysis Time Period:	PM Peak Hour
Jurisdiction:	City of Hillsboro
Year:	2035 with SoHi

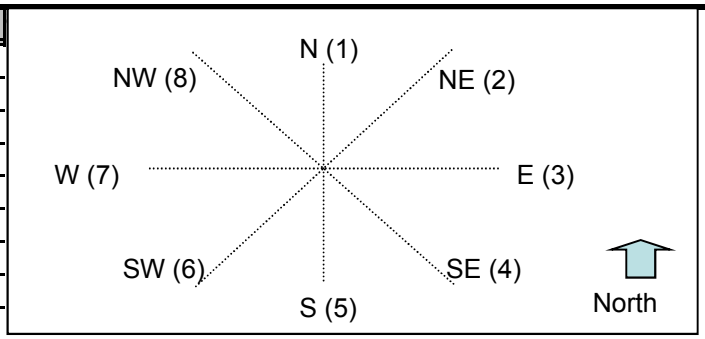

Volumes		Roundabout Approach/Entry Legs							
		N (1)	NE (2)	E (3)	SE (4)	S (5)	SW (6)	W (7)	NW (8)
Input Volumes to Leg #	N (1), vph			135				55	
	NE (2), vph								
	E (3), vph	425						365	
	SE (4), vph								
	S (5), vph								
	SW (6), vph								
	W (7), vph	45		225					
	NW (8), vph								
Output	Total Vehicles	470	0	360	0	0	0	420	0

Volume Characteristics	N	NE	E	SE	S	SW	W	NW
% Trucks	1.0	0.0	1.0	0.0	1.0	0.0	0.0	0.0
E_t	2.0	2.0	2.0	2.0	2.0	2.0	2.0	2.0
PHF	1.00	1.00	1.00	1.00	1.00	1.00	1.00	1.00
F_{HV}	0.990	1.000	0.990	1.000	0.990	1.000	1.000	1.000

Entry/Conflicting Flows	N	NE	E	SE	S	SW	W	NW
Flow to Leg # N (1), pcu/h	0	0	136	0	0	0	55	0
NE (2), pcu/h	0	0	0	0	0	0	0	0
E (3), pcu/h	429	0	0	0	0	0	365	0
SE (4), pcu/h	0	0	0	0	0	0	0	0
S (5), pcu/h	0	0	0	0	0	0	0	0
SW (6), pcu/h	0	0	0	0	0	0	0	0
W (7), pcu/h	45	0	227	0	0	0	0	0
NW (8), pcu/h	0	0	0	0	0	0	0	0
Entry flow, pcu/h	475	0	364	0	0	0	420	0
Conflicting flow, pcu/h	227	419	55	849	849	849	429	702

Results	N	NE	E	SE	S	SW	W	NW
Entry Capacity, pcu/h	900	NA	1070	NA	NA	NA	736	NA
Leg v/c ratio	0.53		0.34				0.57	
Control Delay, s/pcu	8.4		5.1				11.2	
LOS	A		A				B	
95th Percentile Queue (ft)	736	0	564	0	0	0	648	0

Appendix I: Access Management Plans, Policies and Code

Washington County Adopted Plans, Policies, and Codes

Washington County Comprehensive Plan	Applicable to Access Management in Development Review Process
5.0 SYSTEM IMPLEMENTATION AND PLAN MANAGEMENT POLICY IT IS THE POLICY OF WASHINGTON COUNTY TO EFFICIENTLY IMPLEMENT THE TRANSPORTATION PLAN AND TO EFFICIENTLY MANAGE THE TRANSPORTATION SYSTEM 5.6 Communicate and coordinate with other jurisdictions and transportation agencies to ensure orderly and efficient development and operation of the system as a whole and that applicable federal, state and regional planning directives are met.	Allows ODOT opportunity to comment and ensure state standards are being met.
6.0 ROADWAY SYSTEM POLICY IT IS THE POLICY OF WASHINGTON COUNTY TO ENSURE THAT THE ROADWAY SYSTEM IS DESIGNED IN A MANNER THAT ACCOMMODATES THE DIVERSE TRAVEL NEEDS OF ALL USERS OF THE TRANSPORTATION SYSTEM. 6.1 Provide a roadway system necessary to support travel demand associated with anticipated future development of land uses identified in the County's Comprehensive Plan at or better than the standards identified in Table 5 and consistent with policies identified in this plan. 6.3 Identify and implement projects necessary to improve performance and reduce system design deficiencies in roadway corridors and segments that are operating or forecasted to operate at less than acceptable standards as identified in Table 5. 6.11 Require new development or redevelopment projects to comply with local street connectivity, access management, parking and other applicable regulations in the Community Development Code, the Community Plans and the Rural/Natural Resource Plan.	Criteria may be used to be addressed in the development review process to ensure access management meets standards.
7. 0 TRANSPORTATION SYSTEM MANAGEMENT (TSM) POLICY 7.5 Continue to implement community development code access management and spacing standards on Principal Arterials, Arterials, Collectors, and Special Area Streets, as appropriate.	Criteria may be used to be addressed in the development review process to ensure access management meets standards.
8.0 ROADWAY SAFETY POLICY IT IS THE POLICY OF WASHINGTON COUNTY TO PROVIDE A ROADWAY SYSTEM THAT IS SAFE FOR MOTORISTS, PEDESTRIANS AND BICYCLISTS. 8.2 Identify access management problems and apply access management standards as set forth in the Community Development Code in order to reduce traffic conflicts and improve safety.	Criteria may be used to be addressed in the development review process to ensure access management meets standards.

Washington County Comprehensive Plan	Applicable to Access Management in Development Review Process
10.0 FUNCTIONAL CLASSIFICATION POLICY 10.1 Apply the Washington County roadway system functional classification system described below and illustrated in the Functional Classification System Map (See Figures 4a-f). A. Principal Arterials (Freeways and Highways) form the backbone of the motor vehicle network. These routes connect over the longest distance (sometimes miles long) and are spaced less frequently than other Arterials or Collectors. These highways generally span several jurisdictions and often have statewide importance. At a minimum, highways that are classified by ODOT as Interstate or Statewide Highways are considered Principal Arterials. Important characteristics of Principal Arterials include: • Freeways have the highest level of access control, including grade-separated interchanges. No at-grade driveways or connections are allowed. • Highways generally have limited at-grade connections. • Freeways and highways provide connections for the movement of people, services and goods between the central city, regional centers and destinations beyond the region. • Principal Arterials that aren't freeways will be managed to minimize the degradation of capacity while providing limited access to abutting properties. 10.9 Recognize that the functional classification system represents a continuum in which through traffic increases and provisions for access decrease in the higher classification categories. On higher classification roadways, access management will be implemented through the Community Plans and the Community Development Code.	Criteria may be used to be addressed in the development review process to ensure access management meets standards.

Washington County Comprehensive Plan	Applicable to Access Management in Development Review Process
19.0 TRANSPORTATION PLANNING COORDINATION AND PUBLIC INVOLVEMENT POLICY IT IS THE POLICY OF WASHINGTON COUNTY TO COORDINATE ITS TRANSPORTATION PLANNING WITH LOCAL, REGIONAL, STATE AND FEDERAL AGENCIES AND TO PROVIDE OPPORTUNITIES FOR CITIZENS TO PARTICIPATE IN PLANNING PROCESSES. 19.1 Participate in the regional and state technical and policy decision-making processes. 19.11 Integrate the applicable provisions of the Oregon Transportation Planning Rule, Metro's Regional Transportation Plan and 2040 Growth Concept and the applicable provisions of Metro's Urban Growth Management Functional Plan into the Transportation Plan, Community Plans and Community Development Code. 19.12 Work with other jurisdictions to define a decision-making process through which transportation project development issues associated with conflicting, competing or confusing interjurisdictional interests and responsibilities can be identified and addressed. 19.13 Review all plan amendment requests for consistency with the applicable provisions of the Transportation Planning Rule as set forth in OAR 660-12-060.	Criteria may be used to be addressed in the development review process to ensure access management meets standards.
22.0 PLAN MONITORING POLICY IT IS THE POLICY OF WASHINGTON COUNTY TO PERIODICALLY REVIEW THE TRANSPORTATION PLAN TO ENSURE THAT, CONSIDERING AVAILABLE RESOURCES, IMPLEMENTATION ACTIONS ARE CONSISTENT WITH AND ADVANCING PLAN POLICIES, ACHIEVING SATISFACTORY TRANSPORTATION AND LAND USE BENEFITS, AND ARE RESULTING IN ADEQUATE PROGRESS TOWARD ACHIEVING MODE SHARE TARGETS. 22.3 Provide for amendments and administrative adjustments to the Transportation Plan that include the following: A. Legislative Amendments: Those changes which involve the creation, broad scale implementation or revision of public policy, including large scale map changes where a significant number of property owners are directly affected, may be processed as legislative plan amendments, including public hearings, as provided for in the Community Development Code. These include but are not limited to the Functional Classification Map and descriptions, Bicycle System Map (excluding alignment modifications to off-street pathways), plan policies, modifications to the general location of facilities identified in the plan, selection of the general location of a facility in a Corridor Study Area and deletion of proposed facilities identified in the plan.	Maintains the need to update plans and policies for compatibility with updated or new state or regional standards and planning efforts.

Washington County Comprehensive Plan	Applicable to Access Management in Development Review Process
23.0 DEVELOPMENT REVIEW PROCESS IT IS THE POLICY OF WASHINGTON COUNTY TO PROVIDE A DEVELOPMENT REVIEW PROCESS THAT IDENTIFIES, ADDRESSES AND COORDINATES REVIEW OF ROADWAY, TRANSIT, BICYCLE AND PEDESTRIAN FACILITY IMPROVEMENTS THAT MAY HAVE A SIGNIFICANT IMPACT ON THE TRANSPORTATION SYSTEM OR THE COMMUNITY. 23.5 Provide for appropriate public notice and review, including notice to affected transportation service and facilities providers, during the development review process.	Allows ODOT opportunity to comment and ensure state standards are being met.
ALOHA-REEDVILLE-COOPER MOUNTAIN COMMUNITY PLAN Design Elements: 1. ACCESS MANAGEMENT PLAN a. PROJECT AREA: This design element and design elements 2 and 3 for this subarea shall apply only in that portion of the Tualatin Valley (T.V.) Highway Corridor subarea defined as follows: That area bordered by 170th Ave. on the east and 209th Ave. on the west; the Southern Pacific R.O.W. on the south extending to the south side of the Alexander Street R.O.W. on the north; including the contiguous CBD area north of Alexander Street adjacent to 185th Ave.; and also that area bordered by and including 209th Ave. on the east to 219th on the west, the Southern Pacific R.O.W. on the south to the northern terminus of the commercial and industrial designated area south of SW Johnson Street on the north. b. ACCESS STANDARDS: The following access standards shall be defined as an Access Management Plan. The intent of this plan is to promote safety and facilitate traffic flow by consolidating access points yet provided direct individual or shared access to all existing parcels. The access standards shall remain in effect until the completion of a T.V. Highway Preliminary Engineering Analysis including County Board of Commissioners action on a preferred improvement alternative. The ultimate access spacing standard is 360' between access points in the 45 m.p.h. zones and 240' in the 35 m.p.h. zones on T.V. Highway. An intermediate standard of 150' between access points is provided in order to assure direct or shared access to those narrow parcels of less than 360' or 240' respectively in width. c. IMPLEMENTATION PROCEDURE: The application of this design element shall be triggered by land use actions meeting the definitions of New Development or Redevelopment. The terms New Development and Redevelopment are used only in the context of access control and internal block circulation. Permits for site or structure improvements may be issued but only when the criteria for New Development or Redevelopment are met shall the process of Development Review (formerly known as Design Review) consider access control and internal block circulation. New Development is defined as: any change or changes on the parcel producing a 25% increase in projected	Maintains the need to update plans and policies for compatibility with updated or new state or regional standards and planning efforts.

Washington County Comprehensive Plan	Applicable to Access Management in Development Review Process
driveway vehicle trips to and from T.V. Highway at A.M. or P.M. highway peak hours and for which there has not previously been a completed Development Review. When more than one parcels are assembled identifying a new property configuration and use, the new parcel will be defined as New Development if Development Review has not been previously completed. Redevelopment shall be defined to occur if any of the following conditions are met for parcels which previously have completed Development Review: 1) Projected additional 200 A.M. or P.M. roadway peak hour vehicle trips. This shall be in accordance with the current ITE Trip Generation Manual; 2) Any change in land use designation; 3) There is a 100% increase in driveway volume; or 4) more than one parcels are assembled identifying a new property configuration and use. d. APPLICATION OF STANDARDS: Except as stipulated under ORS 374.310, ORS 36.320 and OAR Chapter 734 - Division 50 (Highway Division) the following standards shall apply along T.V. Highway on land designated for commercial, industrial or higher density residential (R-24 and R-25+) use. These standards shall be applied consistently through the Development Review process in a manner that reflects highway safety, the location of the site, the nature of the business proposed, the design of the site, proposed and existing buildings on the site, and buildings on adjacent properties with approved site plans. At the time of Development Review, CPO #6 and ODOT will receive from Washington County Land Use and Transportation Department a copy of all development applications with designs for review and comment. 1) Single Family Residence Driveway access to all existing single family residences on T.V. Highway shall be honored pursuant to ORS 374. 2) Non-residential Shared Access for Minimal Spaced Parcels Except where operational or safety problems are identified through a T.V. Highway traffic circulation study provided by the property owner and acceptable to ODOT, direct access to properties with less than 150' along T.V. Highway shall be shared with adjacent properties. Lots with frontage equal to or greater than 150' along T.V. Highway shall be permitted individual direct access. For such properties, single driveways are preferred except where physical, safety or economical constraints require additional driveways. For lots on T.V. Highway this will be determined through the ODOT accepted traffic circulation study. 3) Non-residential Direct Access and Shared Access for Parcels with Frontages Equal to or Greater Than Shown for T.V. Highway Above (2) Lots with frontage equal to or greater than the amounts shown above (2) on T.V. Highway shall be permitted individual direct access. The maximum practicable driveway spacing will be sought. For such properties, single driveways are preferred except where physical, safety or operational constraints require additional driveways. On	

Washington County Comprehensive Plan	Applicable to Access Management in Development Review Process
T.V. Highway this will be determined through the ODOT accepted traffic circulation study. Existing or assembled lots with frontage equal to or greater than 240' in the 35 m.p.h. zones or 360' in the 45 m.p.h. zones on T.V. Highway shall be permitted individual direct access in compliance with the ultimate standard spacing or as modified through an ODOT accepted traffic circulation study. Adjacent properties along T.V. Highway that together are equal to or greater than the 240' in the 35 m.p.h. zones and 360' in the 45 m.p.h. zones may share access when the adjacent properties trigger the New Development review and when adjacent property owners agree. Driveway location determination will be made through an ODOT accepted traffic circulation study. All accesses that have received Development Review approval since the adoption of Development Review provisions by Washington County in 1973 shall be preserved except as may be modified by Oregon Administrative Rule Chapter 734, Division 50 - Highway Division. In addition, no additional joint use of any such approved driveways will be required (i.e., no change in existing conditions of access) except when Redevelopment as defined above occurs. 4) Lots with Previous Development Review Approval and not Redeveloping All accesses that have received Development Review approval since the adoption of Development Review provisions by Washington County in 1973 shall be preserved except as may be modified by Oregon Administrative Rule Chapter 734, Division 50 - Highway Division. In addition, no additional joint use of any such approved driveways will be required (i.e., no change in existing conditions of access) except when Redevelopment as defined above occurs. 5) Access Points Within 200' of Major Signalized Intersections Since access points within 200' of major signalized intersections can have a significantly adverse effect on T.V. Highway traffic flow, it is desirable to minimize new access points within the parameters listed above. On New Development or Redevelopment, approved access shall be located at the greatest distance from the intersection on site parcels along the T.V. Highway within the findings of an ODOT approved circulation study. 6) Properties Adjacent to Those with Prior Development Review On those sites where all adjacent properties have received Development Review approval, shared access shall not be required unless agreed to by an adjacent property owner, or when either adjacent property triggers Development Review by meeting the criteria of New Development or Redevelopment. 7) Non-residential - Provisions of Access Easements for Internal Circulation Between Adjacent Properties Land owners will provide access easements for internal circulation between adjacent properties within a block	

Washington County Comprehensive Plan	Applicable to Access Management in Development Review Process
where feasible. Feasibility shall be determined during the Development Review process considering such factor as on-site existing and proposed building(s), parking and driveway locations, existing adjacent building(s), parking and driveways on adjacent parcels, natural constraints, and approved adjacent site plans. It is the intent to this internal access system to ultimately provide for interconnecting vehicular circulation via private driveways supportive of property development plans and to remove short local trip making from the T.V. Highway. When internal circulation is determined to be feasible under the above criteria, the design of on-site parking and circulation patterns for New Developments or Redevelopments shall attempt to accommodate future easements across adjacent property lines. No operational or physical changes will be required of any property which is not a part of the application beyond that which was previously determined during the New Development or Redevelopment review specifically applicable to that property. Additionally, on existing developments which have received Development Review approval, the requirement for internal circulation easements shall preserve the same numbers of parking spaces on-site and same internal circulation pattern unless mutually agreed upon by the affected property owners. Compliance with this design element shall not cause non-compliance with parking requirements on those properties that have previously received Development Review approval.	

Washington County Comprehensive Framework Plan for the Urban Area	
POLICY 3, INTERGOVERNMENTAL COORDINATION: It is the policy of Washington County to effectively coordinate its planning and development efforts with Federal, State, and other local governments and Special Districts to ensure that the various programs and activities undertaken by these bodies are consistent with the County Comprehensive Plan.	Allows ODOT opportunity to comment and ensure state standards are being met.
POLICY 15, ROLES AND RESPONSIBILITIES FOR SERVING GROWTH: It is the policy of Washington County to work with service providers, including cities and special service districts, and Metro, to ensure that facilities and services required for growth will be provided when needed by the agency or agencies best able to do so in a cost effective and efficient manner.	Provides for coordination with ODOT.
POLICY 18, PLAN DESIGNATIONS AND LOCATIONAL CRITERIA FOR DEVELOPMENT It is the policy of Washington County to prepare community plans and development regulations in accordance with land use categories and locational criteria contained in the Comprehensive Framework Plan.	Provides for planning framework.
REGIONAL PLANNING POLICY 40, REGIONAL PLANNING IMPLEMENTATION: It is the policy of Washington County to help formulate and locally implement Metro's regional growth management requirements in a manner that best serves existing and future residents and businesses.	Provides for planning framework.

East Hillsboro Community Plan	
GENERAL DESIGN ELEMENTS 4. Access onto Arterial and Collector roads shall be consolidated whenever possible, in keeping with the provisions of the Community Development Code or, subsequent to annexation, with the provisions of the Hillsboro Transportation Plan. 14. New access onto Arterial and Collector streets shall be limited. Shared or consolidated access shall be required prior to the issuance of a development permit for land divisions or structures located adjacent to these facilities, unless demonstrated to be unfeasible.	Maintains the need to update plans and policies for compatibility with updated or ne state or regional standards and planning efforts.
104 CONSISTENCY WITH PLAN AND LAWS 104-1 All use or development of land or structures in unincorporated Washington County shall comply with the Washington County Comprehensive Plan, the Washington County Charter, and applicable Regional, State, Federal and Local laws. Determination of compliance with Regional, State, Federal or Local laws shall be made by the applicable Regional, State, Federal or Local authority responsible for administering the subject law(s). A determination of compliance with such law shall not be a standard or condition of approval, except that proof that mandatory permits have been obtained may be required by specific standards of this Code or as a condition of approval imposed by the Review Authority. Nothing in this Code shall relieve a use or development from compliance with other applicable laws except as provided herein.	Provides for state standards compliance.
408 NEIGHBORHOOD CIRCULATION 408-1 Purpose and Intent This Section is intended to implement the safe and convenient bike and pedestrian access and access to transit provisions of the administrative rule of the Oregon Department of Land Conservation and Development implementing Statewide Planning Goal 12 - Transportation, and to meet the street connectivity requirements of Title 6, Section 3 of Metro's Urban Growth Management Functional Plan. In recognition of the role that local street design plays in helping to preserve the effectiveness of the arterial and collector street system, this Section includes standards requiring a connected local street network in new development. This supports local travel needs so that local trips are not forced onto the arterial or collector street system. This Section is not necessarily intended to require a grid street system, but is intended to provide a development pattern which provides choices and convenient circulation for pedestrians, bicyclists and transit users as well as motorists. This Section has been developed to provide a specific set of review standards which will result in a development pattern which is supportive of pedestrians, bicyclists and transit users. This section provides modification standards in recognition of the fact that any one or more of the specific review standards may not in all cases best meet the intent of the Transportation Planning Rule and/or Metro's Urban Growth Management Functional Plan.	Maintains the need to update plans and policies for compatibility with updated or new state or regional standards and planning efforts.

ARTICLE V: PUBLIC FACILITIES AND SERVICES V-1 501 - PUBLIC FACILITY AND SERVICE REQUIREMENTS 501 PUBLIC FACILITY AND SERVICE REQUIREMENTS 501-7.3 The level of on- and off-site improvements shall be determined based upon the impact and benefit of the proposed development on each facility or service. The boundaries of the impact area for each facility or service shall be determined by the service provider. The boundaries of each impact area need not be identical. 501-7.4 The service provider's information shall be treated as a rebuttable assumption as to the ability to provide an acceptable level of service. However, the evidence that can rebut it must be compelling evidence based upon objective data in order to controvert the determination of the service provider. 501-7.5 The analysis area for collector and arterial roads shall be that geographic area directly impacted and benefited by the proposed development. Data required for determining this area is the responsibility of the applicant and shall be provided to and approved as to adequacy by the County prior to processing of the application by the County. Transportation and Assurances http://www.co.washington.or.us/LUT/Divisions/CurrentPlanning/Transportation/index.cfm	Criteria may be used to be addressed in the development review process to ensure access management meets standards.

ARTICLE V: PUBLIC FACILITIES AND SERVICES V-1 501 PUBLIC FACILITY AND SERVICE REQUIREMENTS	
501-8.5 Access to County and Public Roads All developments shall have legal access to a County or public road. Except for interim access as provided in Section 501-8.5 E. [Interim Access], access onto any County road in the unincorporated or incorporated urban area shall be permitted only upon issuance of an access permit upon demonstration of compliance with the provisions of the County road standards and the standards of Section 501. B. Roadway Access: No use will be permitted to have direct access to a street or road except as specified below, or as provided in Section 501-8.5 E. (Interim Access). Access spacing shall be measured from existing or approved accesses on either side of a street or road.	Criteria may be used to be addressed in the development review process to ensure access management meets standards.

4) Arterials Direct access to arterial roads shall be from collector or other arterial streets. Exceptions for local streets and private accesses may be allowed through a Type II process when collector access is found to be unavailable and impracticable by the Director. Access to arterials shall comply with the following standards: (a) Arterials Direct access to an arterial will be permitted provided that Point 'A' of such access is more than six hundred (600) feet from any intersection Point 'A' or other access to that minor arterial (Point 'C'). (b) Principal Arterials Principal Arterials shall be designed and developed as limited access facilities. Access to a Principal Arterial is subject to approval by ODOT through the State's Access Management Policy and its implementing measures. Access to Tualatin Valley Highway, between SW 170th and SW 209th Avenues, is subject to the provisions of the TV Highway Access Management Plan contained in the Aloha-Reedville-Cooper Mountain Community Plan.	

City of Hillsboro Adopted Plans, Policies, and Codes

City of Hillsboro Transportation System Plan	
Goal 1: Promote Safety. Develop and Maintain a Safe Transportation System that Conforms to the Manual on Uniform Traffic Control Devices (MUTCD) and American Association of State Highway and Transportation Officials (AASHTO) Guidelines. Policy 4. Implement access management standards for arterial and collector roadways consistent with City, County and State requirements.	Criteria may be used to be addressed in the development review process to ensure access management meets standards.
City of Hillsboro Comprehensive Plan	
Section 1. Planning and Citizen Involvement. (Amended by Ord. No. 4491/12-96 and Ord. No. 5987/10-11) (III) Plan Revision and Major Plan Amendments. (Amended by Ord. No. 5987/10-11) Plan revisions and major plan amendments shall be processed as legislative procedures. The following process shall be used when conducting any plan revision or major plan amendment of the Comprehensive Plan: (A) For each proposed plan revision or major plan amendment to the Comprehensive Plan, the City Planning	Allows ODOT opportunity to comment and ensure state standards are being met.

Department will: (1) With the advice and assistance of the CIAC, establish and conduct a citizen involvement program which provides for public involvement and input into the proposed revision or amendment which complies with Statewide Planning Goal 1 requirements. At a minimum, such a public involvement program shall provide for adequate notice on citizen involvement activities; advanced information on matters under consideration; and opportunities for public involvement in all phases of the planning process applicable to the proposed plan revision or major plan amendment as determined by the CIAC. (2) Identify issues to be addressed and related information and data to be collected, reviewed and made available for public review. Inform citizens of these issues; and provide opportunity for citizen access to the related information and data; and for citizen input on these issues. (3) Notify affected government agencies of planning activities; invite review and comment. (4) Collect relevant information and data. (5) Analyze each issue and identify proposed actions which address the issue sufficiently. As part of the public involvement program for the plan revision or major plan amendment: (a) Compile and combine the issue, relevant data and information and actions into text format and make copies of such text available for review and comments by citizens and affected government agencies. (b) Compile comments received from citizens and affected government agencies for consideration by the Planning Commission. The Planning Department shall prepare written responses to comments and make the responses available for public review and to the Planning Commission during its consideration of the proposed plan revision or major plan amendment. (6) A Planning Commission public hearing on a plan revision or major plan amendment shall be conducted after completion of the tasks set forth in Section (III)(A)(1 through 5) above and the citizen involvement program for the plan revision or major plan amendment established by the CIAC. Notice of any public hearing by the Planning Commission or City Council on a plan revision or major plan amendment to the Comprehensive Plan shall be published in a newspaper of general circulation in the City a minimum of 20 days prior to the date of the initial public hearing. Any such notice shall contain: (a) A summary of the plan revision or major plan amendment. (b) The time, date and place of the hearing. (c) The location(s) at which copies of the plan revision or major plan amendment summary may be	

obtained. (d) A statement that all interested persons may appear and provide testimony and that only those persons making an appearance of record may appeal the determination of the Planning Commission or City Council. (e) A general explanation of the requirements for submission of testimony and the procedure for conduct of the hearing. (7) The Planning Commission may recess the hearing in order to obtain further information or provide additional notification. Upon recessing for these purposes, the Commission shall announce the time and date when the hearing will be resumed. (8) After hearing the plan revision or major plan amendment, the Planning Commission shall forward a recommendation of denial, approval, or approval with modifications of the plan revision or major plan amendment to the City Council. (9) The City Council shall hold a hearing during its consideration of a plan revision and may hold a public hearing on any major plan amendment. Notice of the hearing shall be provided in the manner prescribed in subsection (III)(A)(6). After consideration of the plan revision or major plan amendment, the City Council may adopt or deny the plan revision or major plan amendment. (10) The Planning Department shall keep copies of adopted text of the plan revision or major plan amendment on file at the City Hall and City Library for inspection by the public and shall notify citizens and government agencies that copies of the adopted text are available for inspection. (11) The final City Council decision on a plan revision or major plan amendment may be appealed in accordance with applicable State statutory provisions, relating to appeals of decisions amending an acknowledged comprehensive plan. (12) The Planning Commission shall also establish and publicize a procedure whereby interested individuals, community organizations and public agencies may request to be included on a regular mailing list of parties to be notified of the initiation of proposed plan revisions or major plan amendments. (IV) Minor Plan Amendments. (A) Minor Plan Amendment: Plan Text. On its own volition, the City Council or Planning Commission may initiate a minor plan amendment to the text of the Comprehensive Plan by order whenever a need for such a revision is documented. A minor plan amendment, proposing a change to the text of the Comprehensive Plan, shall be processed pursuant to legislative notice and	

procedures. (Amended by Ord. No. 5891/12-08.) (1) Notice of any public hearing on a minor plan amendment to the Comprehensive Plan text shall be by two (2) publications in a newspaper of general circulation in the City of Hillsboro not less than five (5) days, nor more than twenty (20) days prior to the date of the hearing. (B) Minor Plan Amendment: Plan Map. (1) A minor plan amendment proposing a change to the Comprehensive Plan Map designation shall be processed pursuant to quasi-judicial notice and procedures and may be requested at any time by a property owner(s), a person(s) purchasing property under contract, or a person(s) who has the written consent of the property owner. A minor Plan Map amendment may also be initiated by the City Council or the Planning Commission where: (a) The land use on the subject property has changed substantially since the adoption of the Plan Map designation, and is inconsistent with the current Plan Map designation; (b) The subject property has passed from public ownership and use to private ownership and use, or the reverse; or (c) The current Plan Map designation on the subject property is inconsistent with the surrounding properties, based on earlier Plan map changes, and development of the subject property under the implementing zone of the Plan Map designation would have substantial adverse effects on the surrounding properties; and (d) The proposed designation is supportive of and implements goals and policies of the Comprehensive Plan. (Amended by Ord. No. 5938/5-10.) (2) Approval of a minor Plan Map amendment shall be based on demonstration that all of the following criteria are satisfied: (a) The property is better suited for uses proposed than for the uses for which the property is currently designated by the Plan; (b) A need exists for the proposed Plan Map designation that is not already met by existing Plan Map designations in the general area; and (c) The proposed designation is consistent with relevant goals and policies of the Hillsboro Comprehensive Plan.	

(Amended by Ord. No. 5938/5-10.) (3) Notice of any public hearing on such a minor plan amendment to the Comprehensive Plan Map shall be by two (2) publications in a newspaper of general circulation in the City not less than 5 days nor more than 20 days prior to the date of the hearing and by mailing written notice not less than 20 days prior to the date of the hearing to owners of property within the area enclosed by lines parallel to and 500 feet from the exterior boundaries of the property involved using for this purpose the name and address of the owners as shown upon the current records of the County Assessor. In addition, the written notice shall be mailed to the community or neighborhood association and the Citizen Participation Organization within which the property is located and to State, county and city agencies or individuals who request such notice. The contents of the written notice shall comply with the applicable State statutory requirements. The failure of a person to receive the notice specified in this section shall not invalidate any proceedings in connection with the proposed minor revision. (4) A complete application and supporting information addressing the specific criteria for Plan Map amendments shall be filed with the City Planning Department. In order to defray the costs of processing, the application shall be accompanied by a fee as established by the City Council under Subsection (3) of this section. A complete application must include documentation of a neighborhood meeting in compliance with Subsection (4) of this Section. (Amended by Ord. No. 4132/3-93; 5312/10-03, Ord. No. 5597/1-06, and Ord. No. 5777/8-07) (5) For the purpose of establishing or revising the fee cited in subsection (2) above, the City Council shall hold a public hearing. Notice of such hearing shall be published in the local newspaper, and the proposed fee schedule shall be available in the Planning Department and on the City's web site. (Added by Ord. No. 5597/1-06.) (6) Prior to submittal of an application for a Minor Plan Map Amendment, the applicant shall hold a neighborhood meeting at a location in the closest practicable proximity to the subject site. The meeting shall be held on a weekday evening or weekends at any reasonable time. Mailed notice of the meeting shall be provided by the applicant to the surrounding neighborhood, at the same notification radius required by the City for the minor Comprehensive Plan Map amendment. The applicant shall also post notice of the neighborhood meeting on the site at least seven days before the meeting. At the neighborhood meeting, the applicant shall provide preliminary details of the major elements of the development, including number and type of dwellings if applicable, proposed uses, street, lotting, and parking layouts, approximate building locations and heights, and approximate locations for open space and natural resource preservation as applicable. Opportunity shall be provided for attendees to ask questions regarding the proposal. The applicant shall prepare meeting notes of major points, issues, and responses concerning the development proposal that were discussed at the meeting. Only one neighborhood meeting per development proposal is required, but the applicant may hold more meetings if desired. The neighborhood meeting notes, list of parties notified, dated photographs documenting site posting, copies of all materials provided by the applicant at the meeting, and a signature sheet of attendees shall be included with the development application upon submittal.	

Compliance with the provisions of this section is a jurisdictional requirement of the Hillsboro Comprehensive Plan. Applications shall not be submitted without this documentation, or submitted prior to the neighborhood meeting. If submitted, such applications shall not be accepted by the City. (Added by Ord. No. 5777/8-07) (Renumbered by Ord. No. 5938/5-10.) (C) Minor Plan Amendment - General Procedures. (1) A public hearing shall be held by the Planning Commission on any minor plan amendment. (2) Recess of hearing. The Planning Commission may recess a hearing in order to obtain further information or provide additional notification. Upon recessing for these purposes, the Commission shall announce the time and date when the hearing will be resumed. (3) After hearing the proposed minor plan amendment, the Planning Commission shall deny or forward a recommendation of approval or approval with modifications to the City Council. (4) Any party to a proceeding on a minor plan amendment may appeal the recommendation on the amendment of the Planning Commission to the City Council by filing such an appeal with the City Recorder within fifteen (15) days of the mailing date of the Planning Commission's Notice of Decision on the amendment. (5) The City Council may hold a hearing on the proposed minor plan amendment. The Council shall hold a hearing on any appeal of a Planning Commission decision on a minor plan amendment. If a public hearing is held, notice for such a hearing shall comply with the applicable notice requirements relating to minor amendments to the Plan text or to the Plan Map as set forth above. After consideration of a proposal or an appeal, the City Council may adopt or deny the minor plan amendment or uphold, reject or modify the recommendation of the Planning Commission. (6) The applicant shall be notified in writing of the City Council decision. (7) The Planning Department shall keep copies of the adopted minor plan amendment on file at City Hall and the City Library for inspection by the public and shall notify citizens and government agencies who have requested notice that copies of the adopted amendments are available for inspection. (8) The Planning Commission shall also establish and publicize a procedure whereby interested individuals, community organizations and public agencies may request to be included on a regular mailing list of parties to be notified of the initiation of proposed minor plan amendments.	

Section 13. Transportation. **III) Policies** (A) Safety (4) Implement enforceable access management standards for arterial and collector roadways consistent with City, County and State requirements. Use Metro Title 6 and Washington County standards as a guide to establish City access spacing guidelines: Arterial (minimum 600 feet, maximum 1,000 feet) and Collector (minimum 200 feet, maximum 400 feet). ODOT Access Management Categories apply to State routes, but are generally less restrictive than the county standards.	
City of Hillsboro Development Code	
Section 79. <u>Application for Conditional Use</u>. A request for conditional use or modification of an existing conditional use may be initiated by a property owner or his authorized agent by filing an application with the City Recorder. The applicant shall submit plans to the Hearings Board as provided below and in Section 119 and shall pay the fee as set in Section 129. Conditional Use applications for projects one or more gross acres in size or forecast to generate one hundred (100) or more average daily auto trips (ADT), shall include a traffic impact report. The Report shall analyze the impact of the project on City, County and State road and street systems within at least one (1) mile of the project, to such distance at which traffic impacts have dissipated to less than ten percent (10%) over current conditions. The Report shall be prepared and certified by a registered traffic engineer, and shall comply with the following standards: a) Methodology generally in accord with the standards and procedures set forth in Washington County Resolution and Order 86-95 and related code provisions; b) Differentiation between traffic safety improvements necessary due to impacts of the project, and roadway capacity improvements necessary due to traffic volume generated by the project; c) Utilization of Level of Service (LOS) standards for both intersection and roadway segments as specified in Table 137.4, determined by the methodology in the most recent edition of the Highway Capacity Manual published by the Transportation Research Board. The Report shall include the following: a) an estimate of the rough proportionality of the identified safety improvements to the estimated impact of the project or phase of a project, and at the option of the applicant, a cost-effectiveness analysis for all traffic safety	Provides thresholds for when a TIR is required.

problems and potential solutions identified by the study. b) Consideration of the Volume to Capacity ratio and the delay, for each intersection approach's critical lane group; and c) Analysis of the 95th percentile queuing requirements at affected turn lanes.	
Section 114. <u>Authorization for Conditional Amendment and Standards for Zone Change Consideration</u>. (1) Amendment of this Ordinance by amending the zoning map may be contingent upon compliance with conditions found necessary to accomplish the purposes of this Ordinance and implement the goals and policies of the Hillsboro Comprehensive Plan. To that purpose, any of the following conditions, stipulations or limitations may be attached to a zone change approval: (Amended by Ord. No. 3451/3-84.) a. Street improvements abutting/within the development area b. Street dedication abutting/within the development area c. Joint use/access agreement d. Improvement agreements for the installation of necessary on-site public facilities e. Utility easements f. Landscaping g. Off-street parking h. Storm drainage improvements i. Off-site public improvements when the rezoning and subsequent development will contribute significantly to the need for such off-site public improvements j. Development Review approval by the Planning Commission; for projects in zones or locations for which development requirements and design standards are specified in the Zoning Ordinance. (Amended by Ord. No. 4821/9-99.) k. Screening, fencing l. Limiting access m. Surety/performance bond	Allows for conditions placed on development.

n. Non-remonstrance clause	
Section 133: Development Review IV. Plans required. A complete application for development review shall be submitted. Except as otherwise provided in subsection J of this Section, the application shall include the following J. Within fourteen (14) working days after submission of a development review application, the Planning Director may require an applicant to submit one or more technical reports upon determination by the Planning Director that (1) the scale of the development would likely require traffic safety and other public facility or development site improvements; (2) the proposal could have significant adverse impacts on Goal 5 resources; (3) the proposal would be located on, or could have significant adverse impacts upon natural hazard areas identified by the Comprehensive Plan; or (4) the proposal would likely result in significant adverse impacts with respect to noise, toxic or noxious matter, vibrations, odors, heat, glare, air pollution, wastes or other objectionable effects within the development site or immediate surrounding areas. The Director shall inform an applicant of any required technical report under this provision within the 30-day review limit set by ORS 227.178(2). 1. A traffic report may be required by the Planning Director when the Director determines that the development's traffic impacts would cause significant change to the function of adjacent or nearby streets or the flow of traffic thereon. Any required traffic report shall be prepared by a licensed traffic engineer and shall include a discussion of the ability of the roads and intersections to accommodate the anticipated amount of traffic that would be generated by the proposed development. The report also shall take into consideration the availability of mass transit, bicycle paths and ways and pedestrian access. The report shall identify such safety or capacity improvements as may be required consistent with the requirements of this Ordinance. **V. <u>Standards</u>**. A. All construction and development shall comply with the following standards: 10. Circulation patterns within the boundary of the site shall facilitate safe and convenient pedestrian and bicycle access consistent with Sections VI and VIII of this Section. Ingress and egress locations on public thoroughfares shall be located in the interest of public traffic safety. Reasonable access for emergency services (fire, ambulance and police) shall be provided. 16. Adequate rights-of-way and improvements to streets, sidewalks, bike routes and bikeways, and transit facilities required within the development site shall be provided, consistent with the City transportation master plan, adopted design standards, and Street Committee policy. Consideration shall be given to the need for street widening and other transportation improvements within areas in the vicinity of the proposed development impacted by traffic generated by the proposed development which will ameliorate such impacts. If required, such widening and improvements shall have a clear nexus with, and be proportional to the traffic generated by the proposed development and may include, but are not limited to, improvements to the right-of-way, such as installation of lighting, signalization, turn lanes, median and parking strips, traffic islands, paving, curbs and gutters, sidewalks, bikeways, street drainage facilities and other facilities needed because of anticipated vehicular and pedestrian	Provides for traffic safety reports to be provided in development review process.

traffic generation from the development.	
HILLSBORO SUBDIVISION ORDINANCE NO. 2808-7-77 ARTICLE II Tentative Subdivision Application (E) In addition to the certificates, maps and other documents required under Sections (A) through (D) of this Section, the applicant shall provide the following information on the tentative plat or in supporting documents: (9) A Traffic Impact Report, prepared and certified by a registered traffic engineer, analyzing the impact of the project on City, County and State road and street systems within at least one (1) mile of the project, to such distance at which traffic impacts have dissipated to less than ten percent (10%) over current conditions. The Report shall comply with the following standards: a) Methodology generally in accord with the standards and procedures set forth in Washington County Resolution and Order 86-95 and related code provisions; b) Differentiation between traffic safety improvements necessary due to impacts of the project, and roadway capacity improvements necessary due to traffic volume generated by the project; c) Utilization of Level of Service (LOS) standards for both intersection and roadway segments as specified in Table 137.4, determined by the methodology in the most recent edition of the Highway Capacity Manual published by the Transportation Research Board. The Report shall include the following: a) an estimate of the rough proportionality of the identified safety improvements to the estimated impact of the project or phase of a project, and at the option of the applicant, a cost-effectiveness analysis for all traffic safety problems and potential solutions identified by the study. b) Consideration of the Volume to Capacity ratio and the delay, for each intersection approach's critical lane group; and c) Analysis of the 95th percentile queuing requirements at affected turn lanes. (Added by Ord. No. 5894/12-08.)	Provides for traffic safety reports to be provided in development review process.