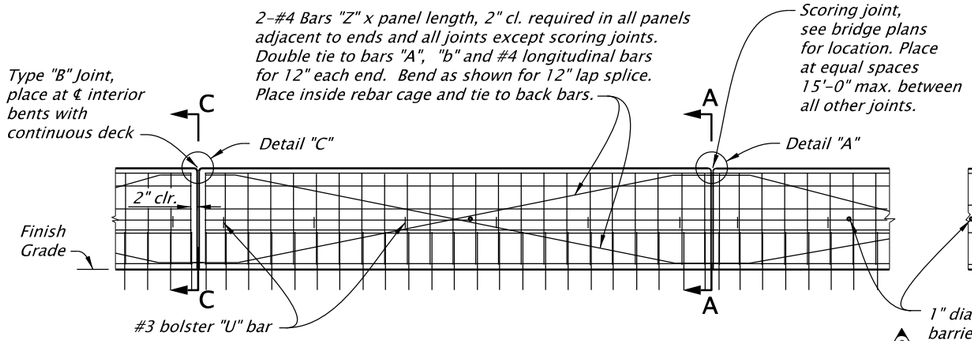

ELEVATION: CONCRETE BRIDGE RAIL (SLIP FORMED)

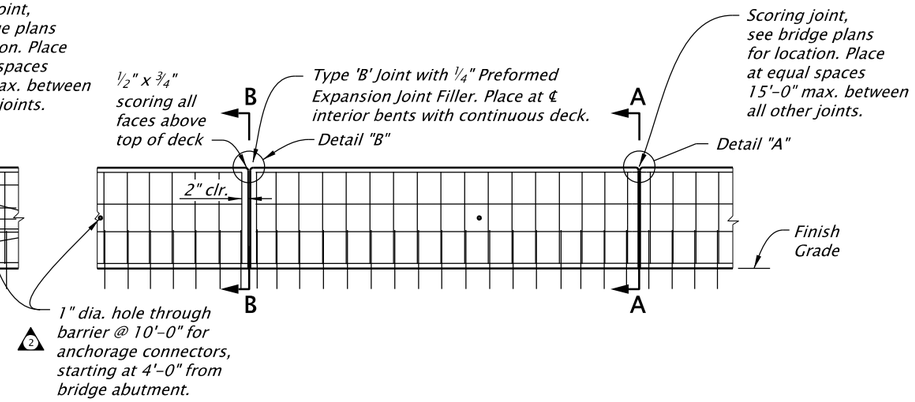

ELEVATION: CONCRETE BRIDGE RAIL (FIXED FORMS)

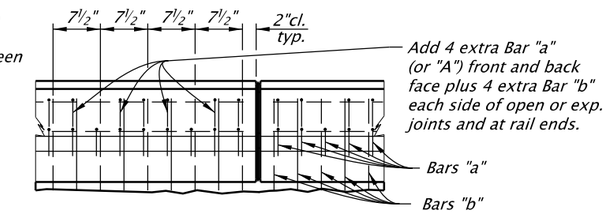

PLAN: BARS AT OPEN OR EXPANSION JOINTS AND RAIL ENDS

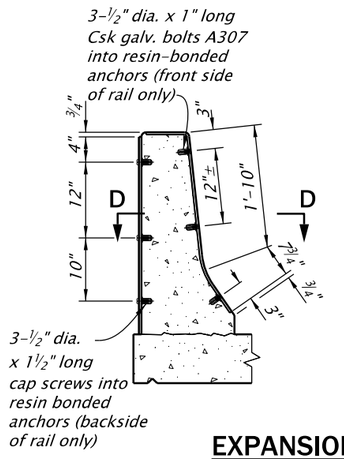

EXPANSION JOINT COVER PLATE

(When Required by Bridge Plans)

NOTE:
Details shown are general details only and should be modified as needed to fit specific project requirements.

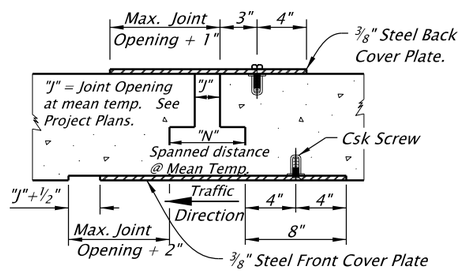

SECTION D-D

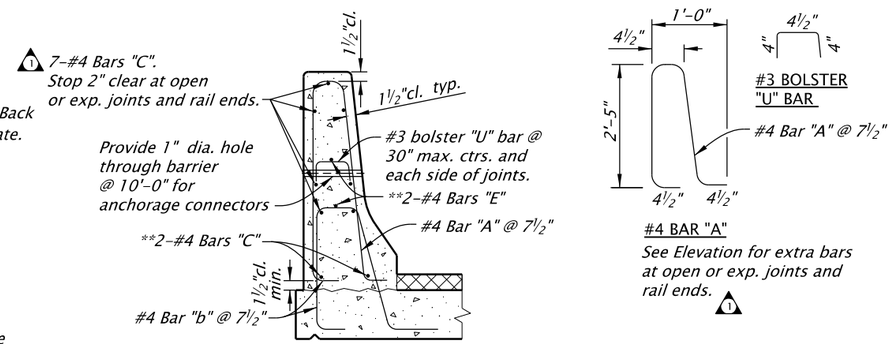

TYPICAL SECTION (SLIP FORMED)

See TYPICAL SECTION (Fixed Forms) and Elevation for details not shown, "Z" bars not shown for clarity.

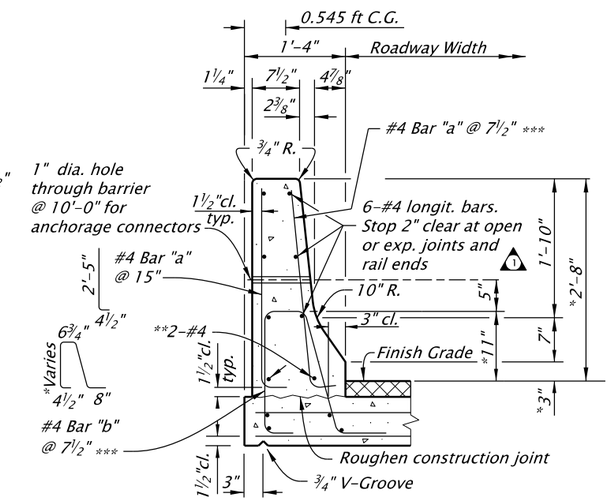

TYPICAL SECTION (FIXED FORMS)

GENERAL NOTES:
Rail designed and crashed tested to meet NCHRP 350 TL-4 requirements.
Provide all reinforcing steel conforming to ASTM A706 or AASHTO M31 (ASTM A615) Grade 60.
Place all bars 2" clear of the nearest face of concrete unless shown otherwise.
Provide Class 3300 - 1½ or ¾ concrete.
Provide steel cover plates conforming to AASHTO M183 (ASTM A36). Hot dip galvanize after fabrication.
At skewed bents up to 20° make joints parallel to the bent center line. For skews greater than 20° make joints normal to rail.

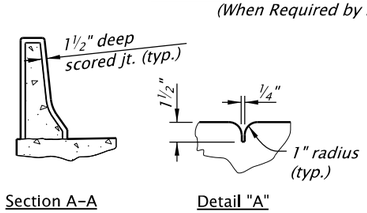

SCORING JOINT DETAIL (SLIP-FORMED) (FIXED FORMS)

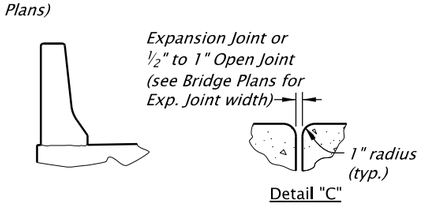

OPEN OR EXPANSION JOINT DETAIL

1 ESTIMATED QUANTITIES

		2'-8" Ht.	1" added Ht.
	Concrete	2.23 ft.³/ft.	0.11 ft.³/ft.
Fixed Forms	Bars "a" & longit.	10.81 #/ft.	———
Slip Formed	Bars "A", "C" & "E"	14.83 #/ft.	———

Bar weight assume scoring joints at 15'-0" ctrs.

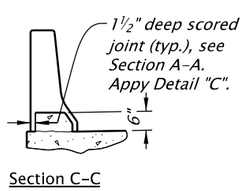

TYPE "B" JOINT DETAIL (SLIP-FORMED)

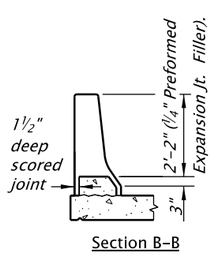

TYPE "B" JOINT DETAIL (FIXED FORMS)

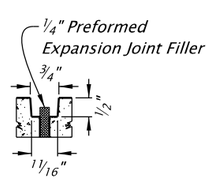

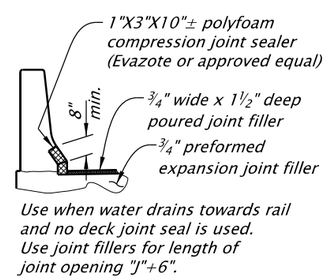

DETAIL "D"

NOTES:
* Place top of parapet 2'-8" above finish grade. Increase dimensions marked thus (*) by depth of ACWS. 1
** Continuous thru scoring and Type 'B' joints, stop 2" clear at ends and open or exp. joints.
See dwg. BR203 for rail on approach slab.
*** See PLAN: BARS AT OPEN OR EXPANSION JOINTS AND RAIL ENDS.

ACCOMPANIED BY DWGS.:
BR203

The selection and use of this Standard Drawing, while designed in accordance with generally accepted engineering principles and practices, is the sole responsibility of the user and should not be used without first consulting a Registered Professional Engineer.

All materials shall be in accordance with the current Oregon Standard Specifications.

OREGON STANDARD DRAWINGS

TYPE "F" CONCRETE RAIL

2024

DATE	REVISION DESCRIPTION
01-2023	Revised notes and rebar callouts.
01-2024	General text revisions.

CALC. BOOK NO. N/A
SDR DATE 19-JAN-2024
BR200

Effective Date: June 1, 2026 - November 30, 2026