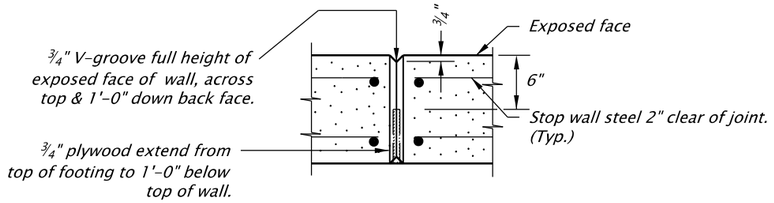

CONTRACTION JOINT
(without scoring)

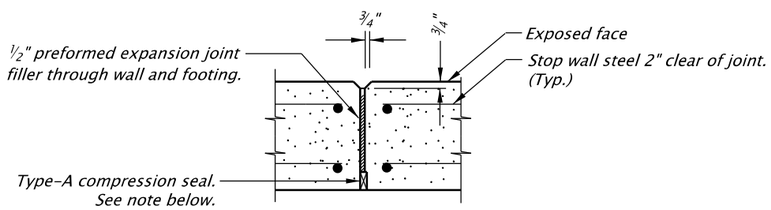

EXPANSION JOINT
(without scoring)

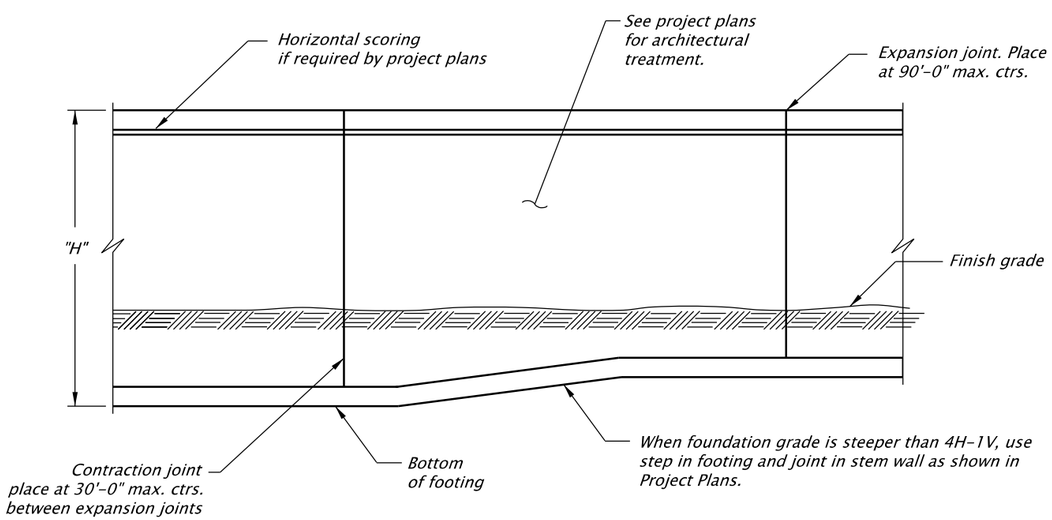

LONGITUDINAL JOINT VIEW
NONE

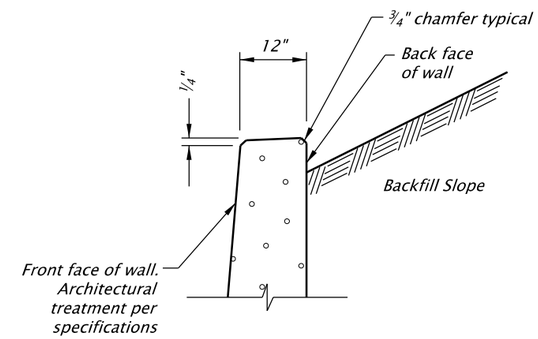

WALL TOP DETAIL

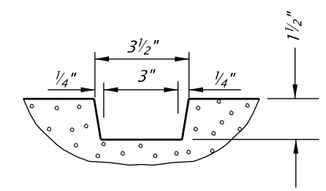

TYPICAL SCORING

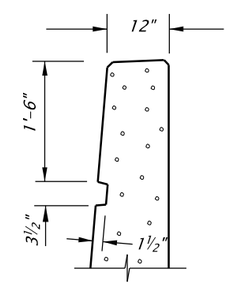

HORIZONTAL SCORING
(If shown on project plans)

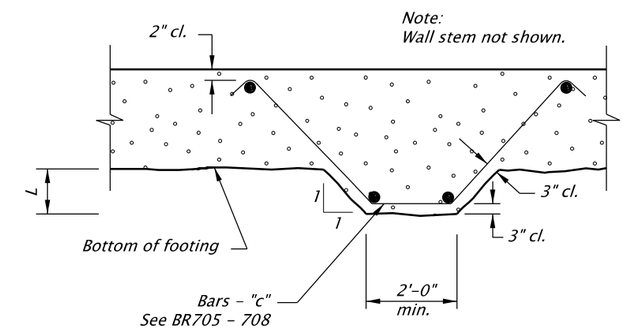

KEY DETAIL

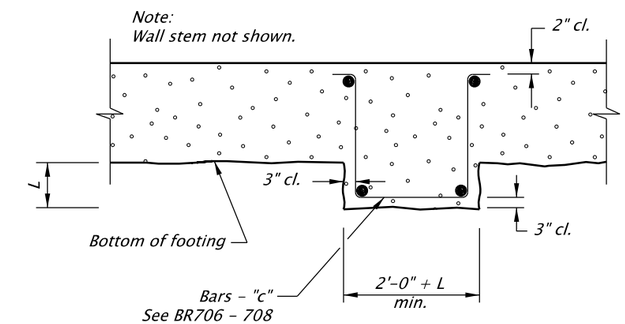

ALTERNATE KEY DETAIL

NOTES:
Type-A Compression Joint Seal.

1. Install in accordance with manufacturer's recommendations from top of wall to top of footing.

2. See drg. BR139 for nominal size, joint and installation width.

The selection and use of this Standard Drawing, while designed in accordance with generally accepted engineering principles and practices, is the sole responsibility of the user and should not be used without first consulting a Registered Professional Engineer.

All materials shall be in accordance with the current Oregon Standard Specifications.

OREGON STANDARD DRAWINGS

STANDARD RETAINING WALL CAST-IN-PLACE SEMI-GRAVITY JOINTS AND DETAILS

2024

DATE	REVISION DESCRIPTION
01-2024	Note edit

CALC. BOOK NO. 6402, 6406, 6407 | SDR DATE 19-JAN-2024 | **BR709**

19-JAN-2024

BR709.dgn

Effective Date: June 1, 2026 - November 30, 2026