13-JAN-2026

TM482.dgn

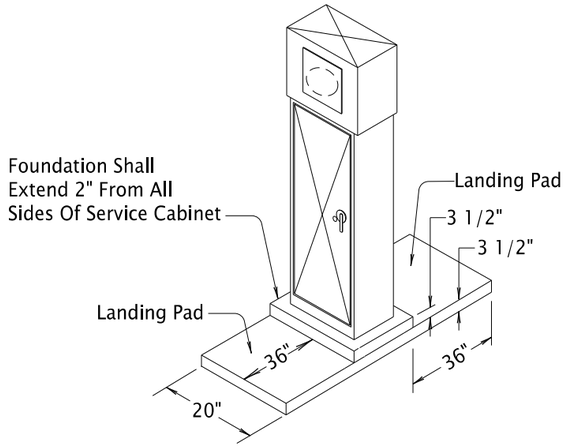

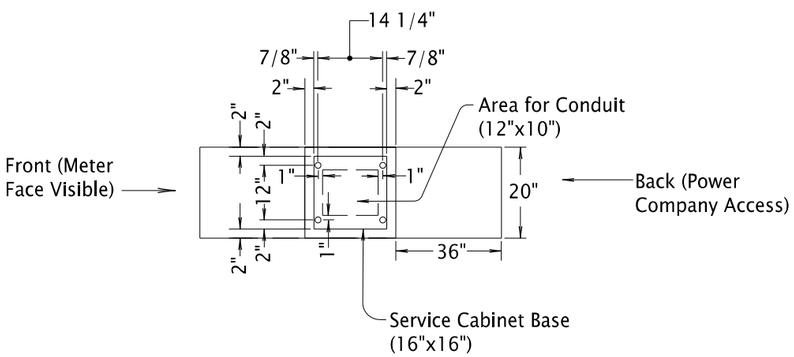

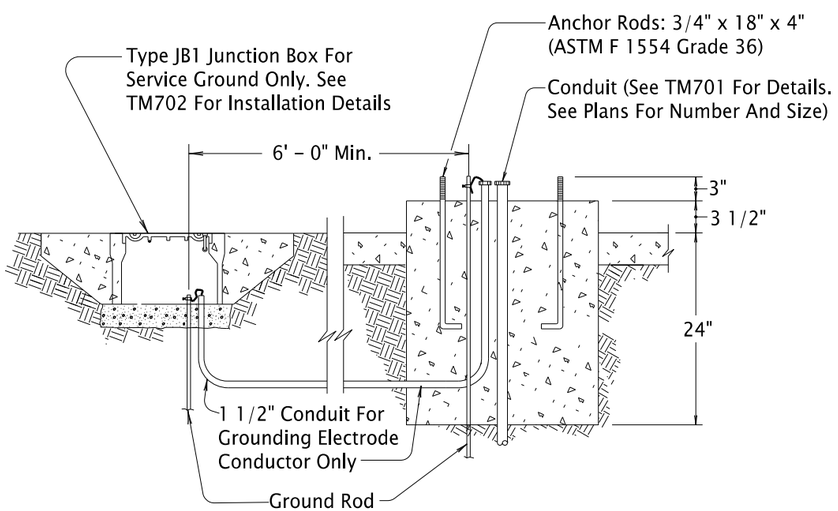

BASE MOUNTED SERVICE CABINET FOUNDATION

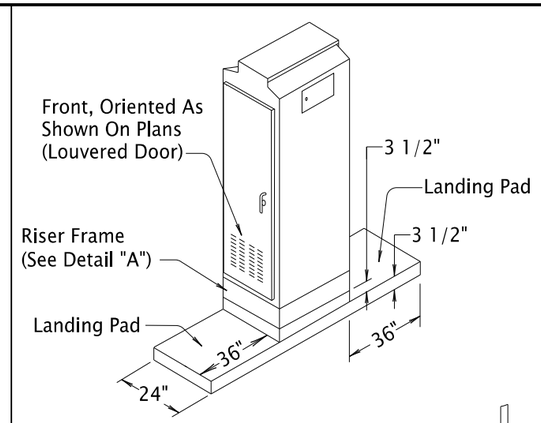

General Notes:

1. All Screws, Bolts, Nuts And Washers Shall Be Galvanized Steel Unless Noted Otherwise.
2. Bolts And Screws Shall Have Square Or Hex Heads. Allen Fasteners Not Allowed.
3. Type 304 Or 316 Stainless Steel Or Galvanized Steel May Be Used For Mounting Cabinet To Riser Frame.
4. Provide A 3/4" Chamfer On All Exposed Concrete Edges.

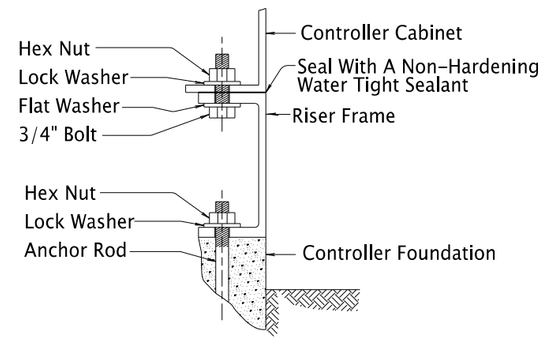

DETAIL "A"
RISER FRAME CONNECTION

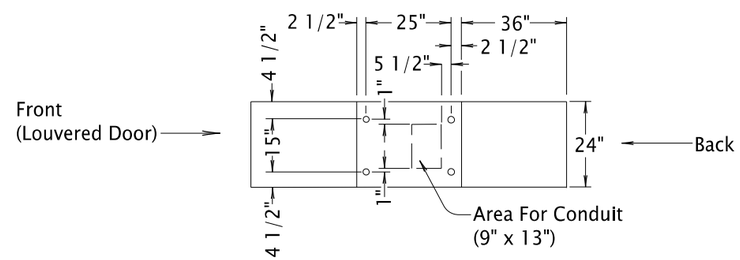

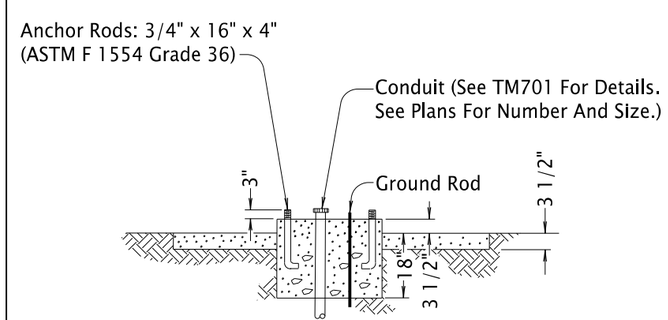

CONTROLLER CABINET FOUNDATION DETAILS

(Model 332S, 332, 334, And 340 Cabinets)

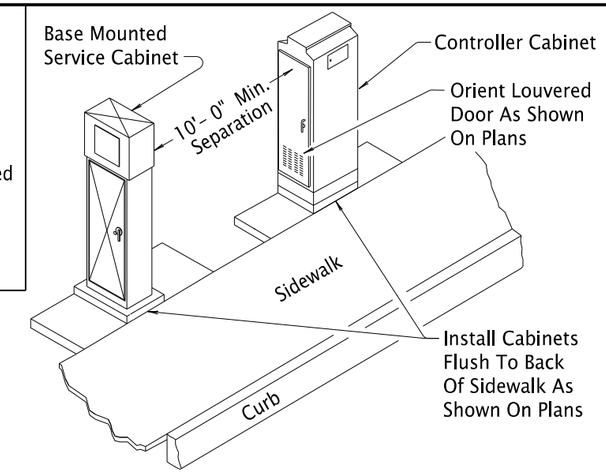

WITH SIDEWALK

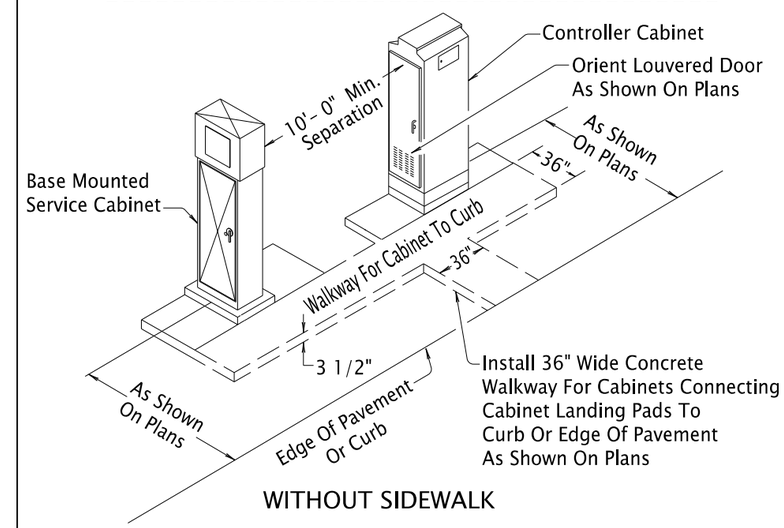

WITHOUT SIDEWALK

CABINET FOUNDATION LOCATIONS

Note: Verify Base Mounted Service Cabinet Location And Meter Placement Is Acceptable To Local Power Company

The selection and use of this Standard Drawing, while designed in accordance with generally accepted engineering principles and practices, is the sole responsibility of the user and should not be used without first consulting a Registered Professional Engineer.

All materials shall be in accordance with the current Oregon Standard Specifications.

OREGON STANDARD DRAWINGS

CONTROLLER CABINET & SERVICE CABINET FOUNDATION DETAILS

2024

DATE	REVISION DESCRIPTION
01-2021	UPDATED ALL ANCHOR ROD DETAILS
01-2025	UPDATED STANDARD DRAWING REFERENCES
07-2025	REMOVED BUILDING PAPER REQUIREMENT
01-2026	CORRECTED TYPOS

CALC. BOOK NO. N/A | SDR DATE 13-JAN-2026 | TM482

Effective Date: June 1, 2026 - November 30, 2026