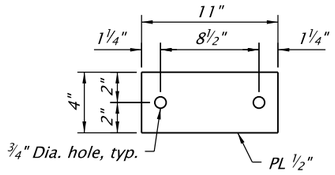

TAB PLATE
No Scale

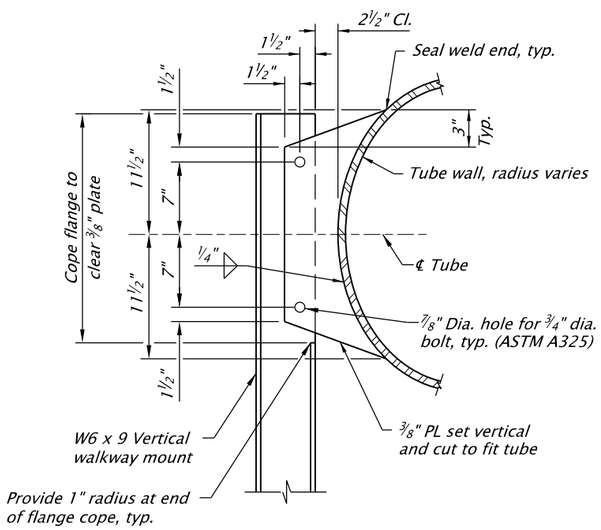

DETAIL "A"
No Scale

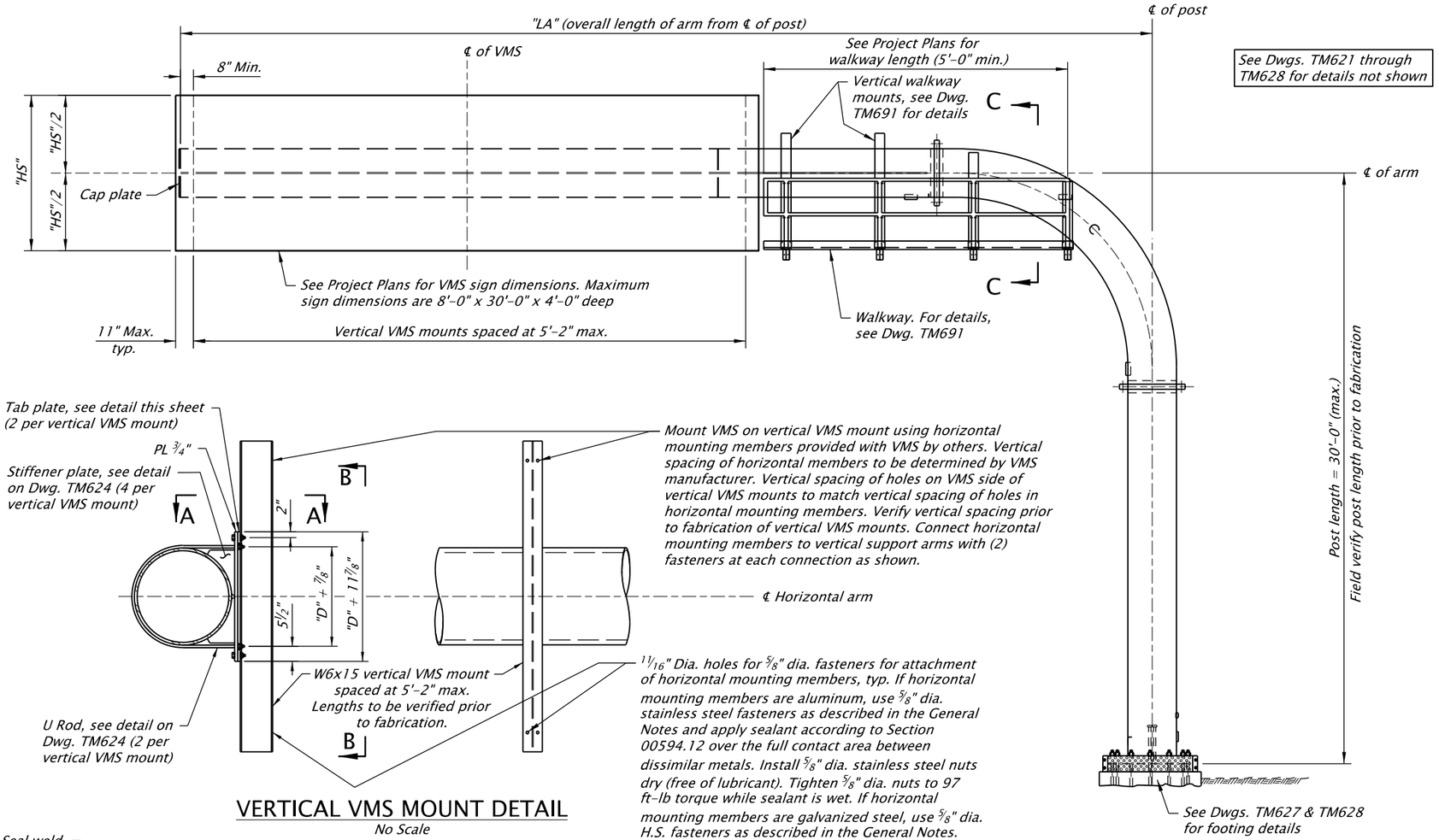

See Dwgs. TM621 through TM628 for details not shown

Mount VMS on vertical VMS mount using horizontal mounting members provided with VMS by others. Vertical spacing of horizontal members to be determined by VMS manufacturer. Vertical spacing of holes on VMS side of vertical VMS mounts to match vertical spacing of holes in horizontal mounting members. Verify vertical spacing prior to fabrication of vertical VMS mounts. Connect horizontal mounting members to vertical support arms with (2) fasteners at each connection as shown.

$1\frac{1}{16}$" Dia. holes for ⅝" dia. fasteners for attachment of horizontal mounting members, typ. If horizontal mounting members are aluminum, use ⅜" dia. stainless steel fasteners as described in the General Notes and apply sealant according to Section 00594.12 over the full contact area between dissimilar metals. Install ⅝" dia. stainless steel nuts dry (free of lubricant). Tighten ⅝" dia. nuts to 97 ft-lb torque while sealant is wet. If horizontal mounting members are galvanized steel, use ⅝" dia. H.S. fasteners as described in the General Notes.

VERTICAL VMS MOUNT DETAIL
No Scale

Note:
Arm and post dimensions and field splice information shall be in accordance with Structure Design No. 9. See Dwg. TM621.

ELEVATION
No Scale

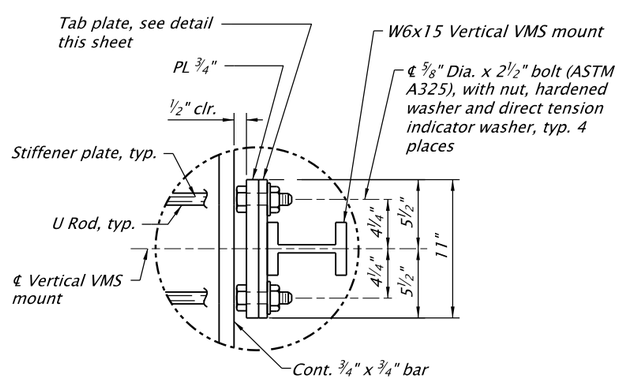

SECTION A-A
No Scale

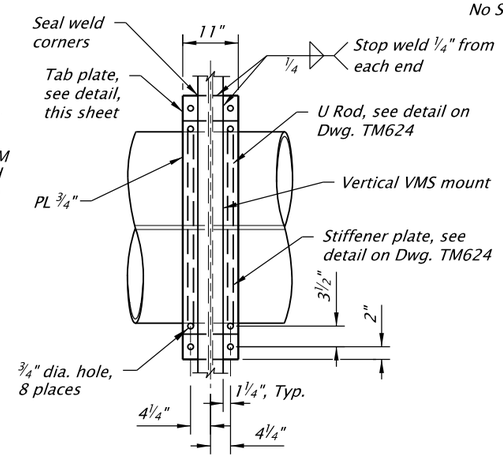

SECTION B-B
No Scale

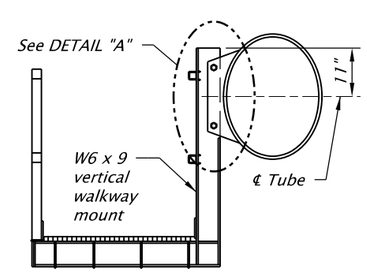

SECTION C-C
(Typical Section on curved tube)
No Scale

Accompanied by dwgs. TM621, TM622, TM623, TM624, TM625, TM626, TM627, TM628, TM691

The selection and use of this Standard Drawing, while designed in accordance with generally accepted engineering principles and practices, is the sole responsibility of the user and should not be used without first consulting a Registered Professional Engineer.

All materials shall be in accordance with the current Oregon Standard Specifications.

OREGON STANDARD DRAWINGS

STD. MONOTUBE WALK-IN VMS CANTILEVER GENERAL DESIGN CRITERIA

2024

DATE	REVISION DESCRIPTION

CALC. BOOK NO. 6921-6930 | SDR DATE 19-JAN-2018 | **TM690**

Effective Date: June 1, 2026 - November 30, 2026