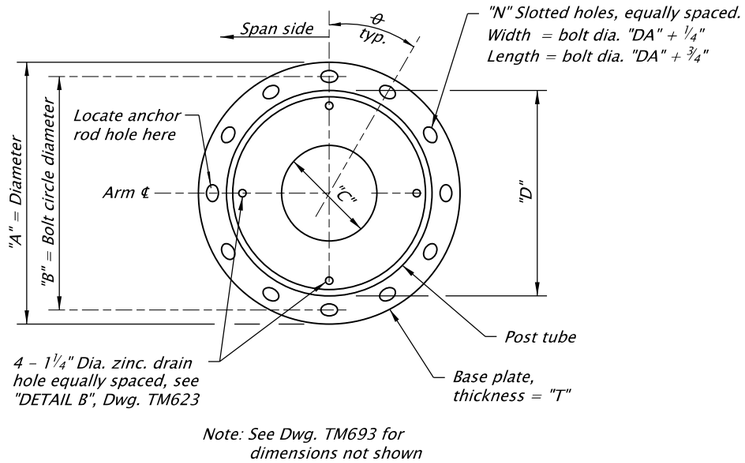

BASE PLATE

No Scale

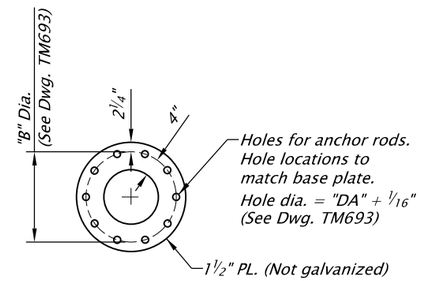

ANCHOR PLATE DETAIL

No Scale

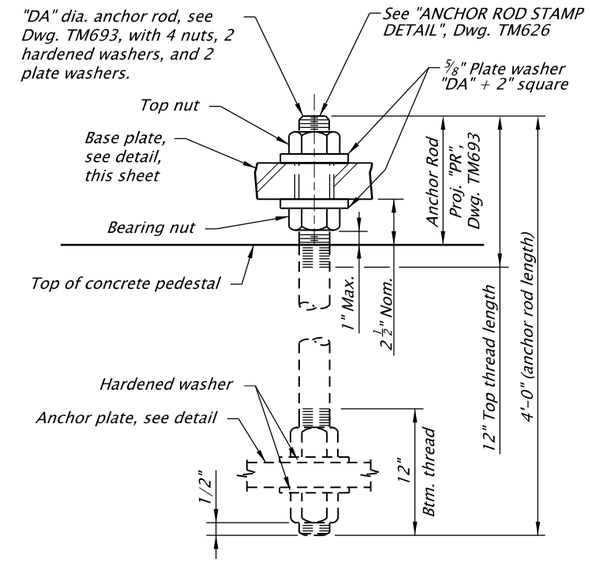

DETAILS @ TOP AND BOTTOM OF ANCHOR ROD

No Scale

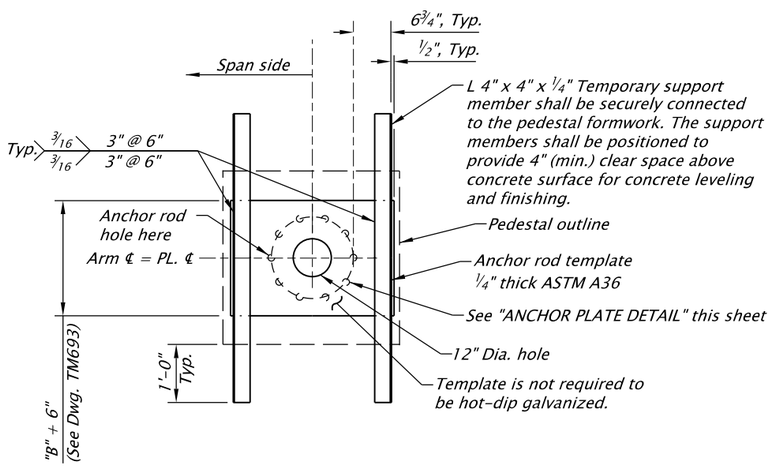

TEMPLATE DETAIL

No Scale

Bridge Span Length Temperature Adjustment Table			
Span "S" (ft.)	Temperature Change from 50° Fahrenheit		
	18° F	36° F	54° F
	Length Change from 50° Fahrenheit		
60' - 80'	1/8"	1/4"	5/16"
81' - 100'	1/8"	1/4"	7/16"
101' - 120'	3/16"	5/16"	1/2"

Temperature Adjustment Notes:

Instructions to Fabricator:

1. *Adjust the Span "S" length at the fabrication temperature so that the span will be the nominal length at the 50° F given on the Project Plans. For example, if the nominal span is 164 ft. and if the fabrication temperature is 86° F (which is 36° F higher than the reference temperature) the fabrication length would be 164' + 1/2".*
2. *The bridge must be made longer when the fabrication temperature is higher than the reference temperature. The bridge must be made shorter than the nominal length when the fabrication temperature is lower than the reference temperature.*

Accompanied by dwgs. TM627, TM628, TM693, TM694, TM695, TM696

The selection and use of this Standard Drawing, while designed in accordance with generally accepted engineering principles and practices, is the sole responsibility of the user and should not be used without first consulting a Registered Professional Engineer.

All materials shall be in accordance with the current Oregon Standard Specifications.

OREGON STANDARD DRAWINGS

STD. MONOTUBE VMS/SIGN BRIDGE DETAILS

2024

DATE	REVISION DESCRIPTION

CALC. BOOK NO. 6969-6972 | SDR DATE 08-JUL-2019 | **TM697**

Effective Date: June 1, 2026 - November 30, 2026