NOTES:

- Do not block bicycle lanes, sidewalks, or TPAR's with sign supports. Maintain minimum widths for these facilities according TCP Design Manual, MUTCD, ADA, or as directed.
- To be accompanied by Dwg. Nos. TM670, TM671, TM687, TM688 & TM689.

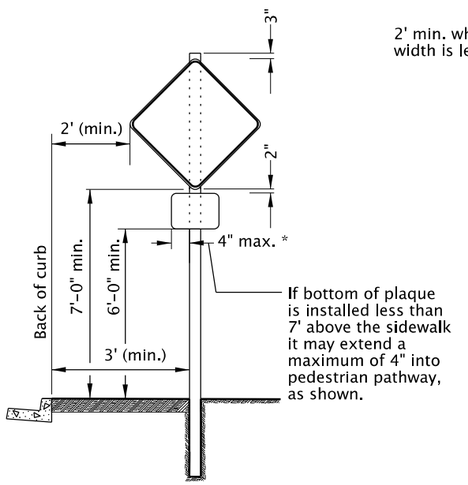

Urban Areas With Curb/Sidewalk

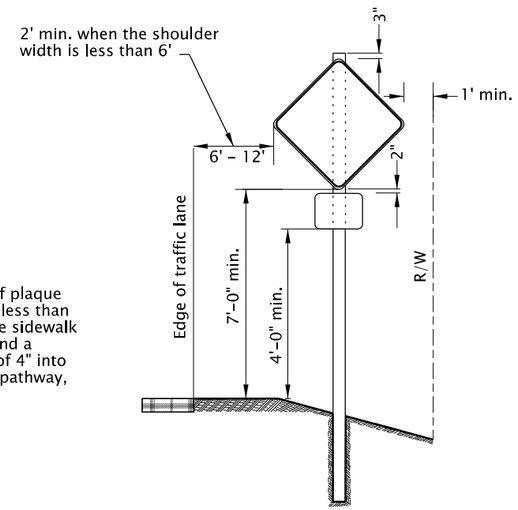

Rural Areas

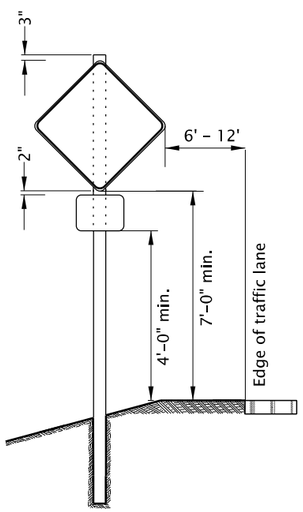

Divided Highway/Freeway Medians
No Curb/Sidewalk

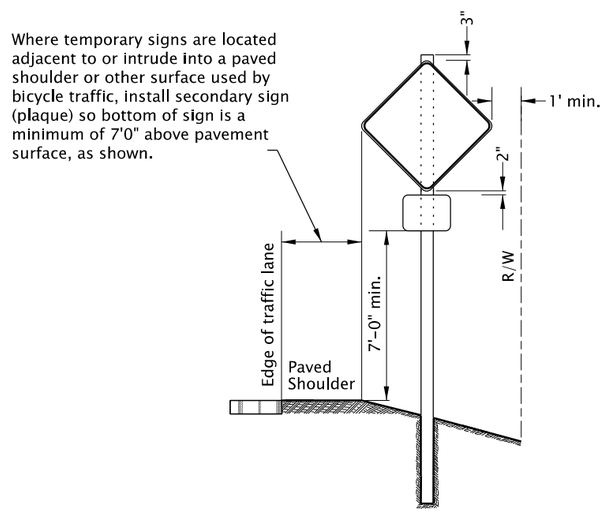

Rural or Urban Areas - Curb or No Curb
Bicycles On Shoulder

TEMPORARY SIGN PLACEMENT

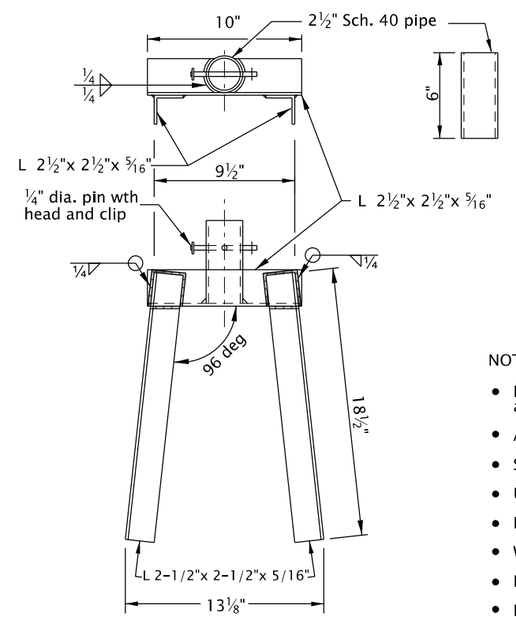

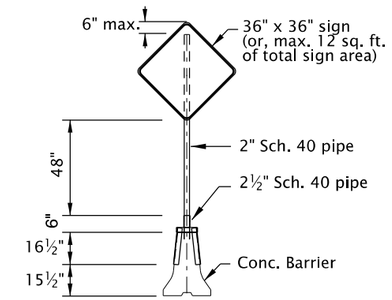

NOTES:

- Drill additional holes so sign can be rotated 90 degrees and pinned when not in use.
- All structural steel shall conform to ASTM A36.
- Support fits both 32" and 42" tall "F" barrier.
- Use for supporting a maximum 12 sq. ft. of total sign area.
- Place support at connection between two concrete barrier sections.
- Weld steel according to American Welding Society (AWS) D.1.1.
- Do not use clipped signs.
- Follow manufacturer recommendation when installing signs on barrier other than concrete.

CONCRETE BARRIER SIGN SUPPORT

The selection and use of this Standard Drawing, while designed in accordance with generally accepted engineering principles and practices, is the sole responsibility of the user and should not be used without first consulting a Registered Professional Engineer.

All materials shall be in accordance with the current Oregon Standard Specifications.

OREGON STANDARD DRAWINGS

TEMPORARY SIGN SUPPORTS

2024

DATE	REVISION DESCRIPTION

CALC. BOOK NO. N/A | SDR DATE 01-JUL-2020 | **TM822**

Effective Date: June 1, 2026 - November 30, 2026

01-JUL-2020
TM822.dgn