POST - SUPPORTED WIRE MESH SLOPE PROTECTION AND POST - SUPPORTED ROCK PROTECTION SCREEN ANCHOR DETAILS

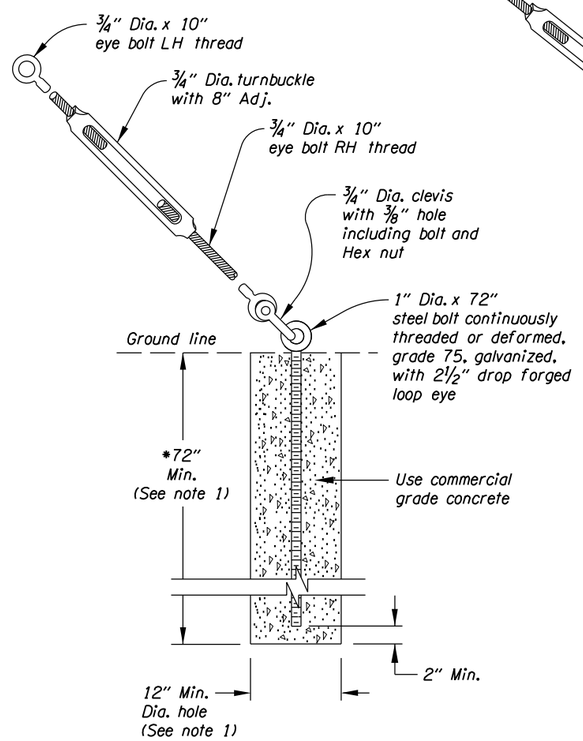

STEEL BOLT ANCHOR TYPE

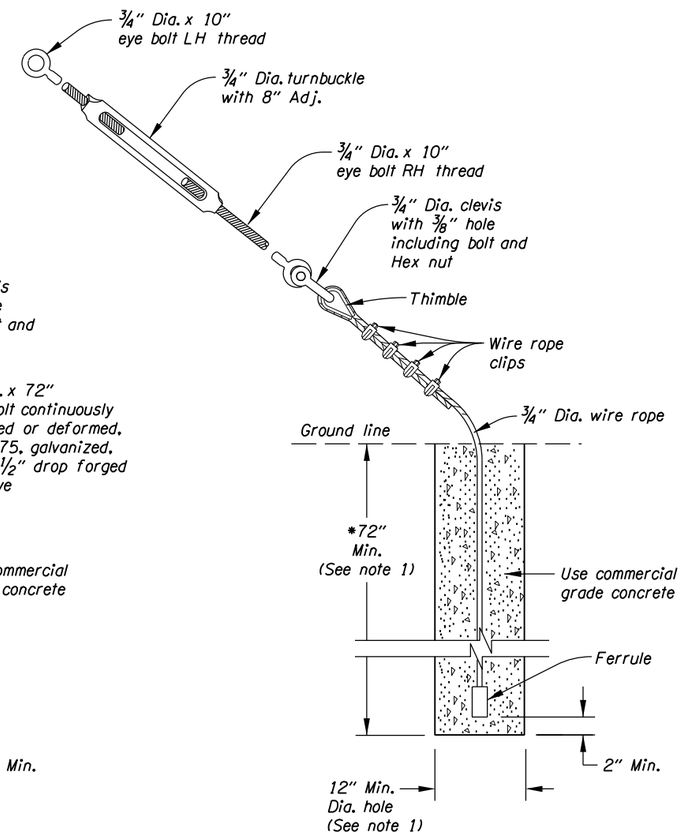

3/4" WIRE ROPE TYPE

END AND POST RETAINING CABLE ANCHOR IN SOIL

Notes:

1. *Minimum dimension. If rock is encountered before these dimensions are obtained, then use method shown for rock anchors.*
2. *Contractor may select from these options where anchors are installed in soil.*

* *Minimum depth*

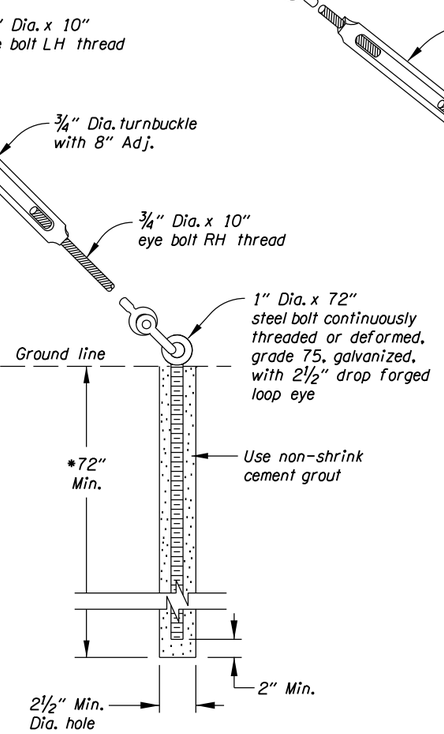

STEEL BOLT ANCHOR TYPE

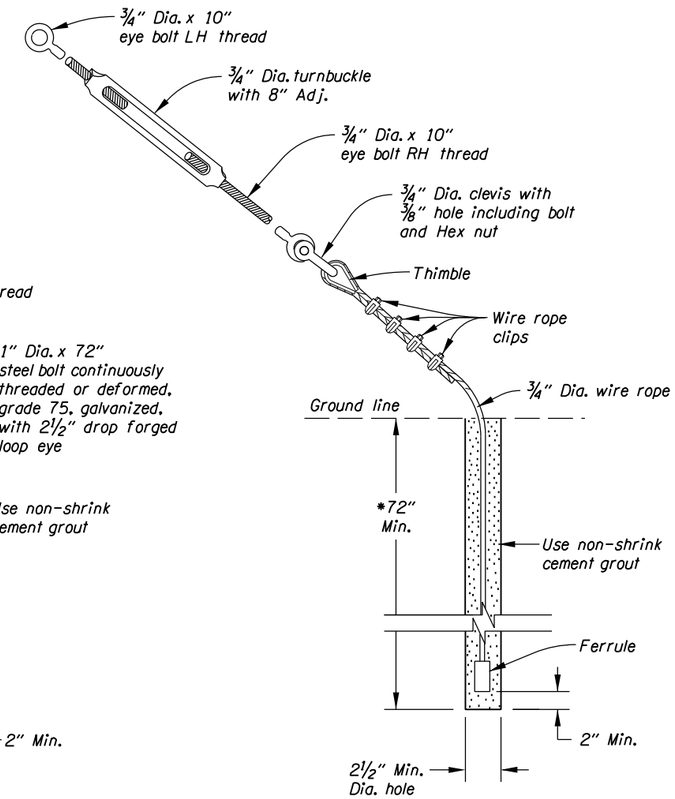

3/4" WIRE ROPE TYPE

END AND POST RETAINING ROPE ANCHOR IN ROCK

Notes:

1. *Contractor may select from these options where anchors are installed in rock.*

* *Minimum depth*

The selection and use of this detail, while designed in accordance with generally accepted engineering principles and practices, is the sole responsibility of the user and should not be used without consulting a Registered Professional Engineer.

OREGON DEPARTMENT OF TRANSPORTATION
TECHNICAL SERVICES
DETAILS

POST SUPPORTED WIRE MESH SLOPE PROTECTION AND ROCK PROTECTION SCREEN ANCHOR DETAILS

DETAIL NO. DET2207