GIRDER SCHEDULE

Girder Type	Girder Number	Number Required	LT. = Lt. Exterior RT. = Rt. Exterior	Span Number	Span Length ctr.-ctr. Bearings along Girder ℄	"A", o-o Girder (Horiz. Length after Shortening)	Girder Weight, kips	Concrete Strength @ 28 Days, ksi	Concrete Strength @ Release, ksi	Initial Tension per Strand, kips	Number of Strands per Girder "N"	Figure Number for Strand Pattern	Reinforcing Bars: Stirrup Spaces "a"	Reinforcing Bars: Stirrup Spaces "b"	Reinforcing Bars: (Stirrup Leg) "m"	Diaphragm (Negative Value Indicates Back from Midspan): D_L	Diaphragm: D_R	Back End (On Stationing): End Block	Back End (Negative Value Indicates Point Beyond Girder End): F_L	Back End: E_L	Back End: E_R	Back End: F_R	Ahead End (On Stationing): End Block	Ahead End (Negative Value Indicates Point Beyond Girder End): F_L	Ahead End: E_L	Ahead End: E_R	Ahead End: F_R	Estimated Midspan Deflection, in.: Upward at Release	Estimated Midspan Deflection: Upward 3 Months after Release	Estimated Shortening 2 Weeks after Release, in.

FIGURES

	FIGURE 1	FIGURE 2	FIGURE 3	FIGURE 4
"N"				
"yc"				

	FIGURE 5	FIGURE 6	FIGURE 7	FIGURE 8
"N"				
"yc"				

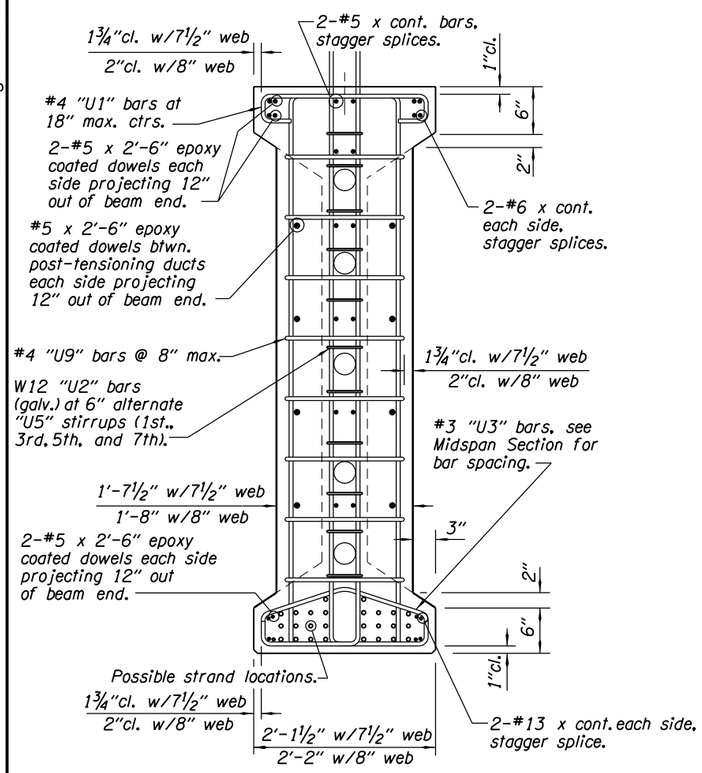

END BLOCK END VIEW

No Scale

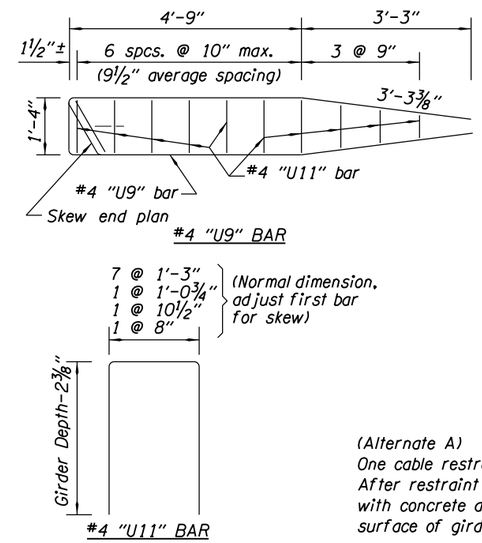

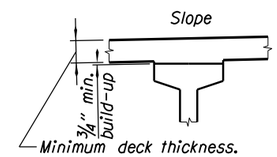

SECTION A-A

When the girder build-up exceeds 3" and/or the girder stirrups extend less than 2" into the deck, add #4 stirrup extensions. Place stirrup extensions at each girder stirrups and tie to the girder stirrup. Where girder stirrup spacing is 6" or less, place stirrup extentions @ 12" max.

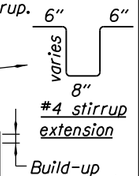

#4 stirrup extension

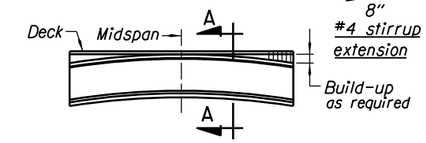

Ensure girder soffits are on level grade prior to prestressing. Use build-up over girder to compensate for the difference between deck elevation and girder camber.

BUILD - UP DECK DETAIL

(Alternate A)
One cable restraint at each Beam D. After restraint is removed, fill hole with concrete and finish flush with surface of girder-exterior girders only.

(Alternate B)
Cable restraints top and bottom at each Beam D.

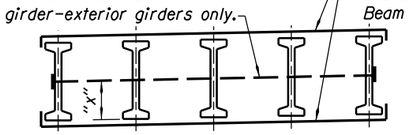

GIRDER RESTRAINT DIAGRAM

Snug fit prestressed girders against forms prior to diaphragm pour. Keep restraints in place a min. of two days after completion of diaphragm pour.

Note:
Transport members in accordance with Section 00550.49 of the Standard Specifications for Highway Construction. Place members no less than _____ days after casting.

NOTE TO DESIGNER
Remove note if 7 day transport and placement is okay without placement restrictions.

Note:
For temporary diaphragm beam details, see dwg. BR350

NOTE TO DESIGNER
End Blocks are typically not necessary at continous bents.

NOTE TO DESIGNER
Design girders using ¾" min. build-up over girders.

Accompanied by dwgs. BR350

The selection and use of this detail, while designed in accordance with generally accepted engineering principles and practices, is the sole responsibility of the user and should not be used without consulting a Registered Professional Engineer.

OREGON DEPARTMENT OF TRANSPORTATION
TECHNICAL SERVICES
DETAILS

BULB-I GIRDER SCHEDULE, POST-TENSIONED END BLOCK AND MISCELLANEOUS DETAILS

DETAIL NO. DET3396

det3396.dgn 04-2016

DET3396

1:16 - det3396