Table of Contents

3.1 Section 3 – Introduction 6
3.1.1 Procedure and Process Guides 6

3.2 Bridge Design Software 7
3.2.1 Design Software 7
3.2.2 Software Verification 8
3.2.3 MathCAD Template Library 8

3.3 Bridge Design Process (Design-Bid-Build), Overview 9
3.3.1 Scoping 9
3.3.2 Project Initiation (Kick-Off) 10
3.3.3 50% TS&L (Proof of Concept Plans) 10
3.3.4 TS&L Report 10
3.3.5 Design Acceptance Plans Package 10
3.3.6 Preliminary Plans Package Milestone 11
3.3.7 Advance Plans Package Milestone 11
3.3.8 Final Plans Package Milestone 12
3.3.9 PS&E Milestone 12
3.3.10 Bridge Design Close Out 12

3.4 Roles & Responsibilities 13
3.4.1 Key Personnel 13
3.4.2 Large or Multiple Bridge Projects 16

3.5 Quality 17
3.5.1 Introduction 17
3.5.2 Definitions 18
3.5.3 Design Quality Plans 19
3.5.4 Bridge Design Quality Documentation 19
3.5.5 Bridge Design Quality 'Touchpoints' 20
3.5.6 Design Reviews 21
3.5.7 Design Checks 21
3.5.8 Qualifications of Designer, Checker & Reviewer 24
3.5.9 Performance Measures 24
3.5.10 Troubleshooting Bridge Design Quality 24
3.5.11 Recovery Plans 24
3.5.12 Quality Audits 25
3.5.13 Work Assignments 25
3.5.14 Training & Mentoring 25

3.6 (Reserved) 26

3.7 QPL / research 26
3.7.1 Qualified Products List (QPL) 26
3.7.2 Research 26

3.8 (Reserved) 27

3.9 Preliminary Design / DAP / TS&L 27
3.9.1 Introduction 27
3.9.2 Purpose of TS&L 28
3.9.3 When is a TS&L needed? 29
3.9.4 TS&L Approval 30
3.9.5 Multiple Bridge Projects 30

3.9.6 TS&L Report 30
3.9.7 Alternatives Study 30
3.9.8 Bridge Design Standards Assessment 30
3.9.9 Design Deviations and Exceptions 31
3.9.10 TS&L Report with Memo 31
3.9.11 TS&L Report with Narrative 31
3.9.12 Engineer's Estimate @ TS&L 32
3.9.13 TS&L Plan Sheet(s) 32
3.9.14 TS&L Calculations 32

3.10 Final Design / PS&E 33
3.10.1 Introduction 33
3.10.2 Sealing & Signing Requirements 33
3.10.3 Contract Plans 34
3.10.4 Specifications & Special Provisions 34
3.10.5 Engineer's Estimate of Probable Construction Cost 34
3.10.6 Engineer's Estimate of Probable Construction Schedule 35
3.10.7 Calculations & Calculation Books 35
3.10.8 Bridge Load Rating 38
3.10.9 Operations and Maintenance Manuals 38

3.11 PS&E to Award 40
3.11.1 Introduction 40
3.11.2 Changes to Bridge Deliverables after PS&E 40
3.11.3 Bridge Design Project Close-Out 40
3.11.4 Request for Information (RFI) 40
3.11.5 Addenda Letters 40

3.12 Construction Support 41
3.12.1 Introduction 41
3.12.2 Communications during Construction 41
3.12.3 Shop Drawing Review 41
3.12.4 Temporary Works Review 41
3.12.5 Construction Support Close-Out 42

3.13 (Reserved) 43

3.14 Coordination with other Project Team Members [1.1.2.9] 43
3.14.1 General 43
3.14.2 Project Management 43
3.14.3 Survey and Mapping, & Right Of Way 44
3.14.4 Roadway 45
3.14.5 Traffic and Mobility 52
3.14.7 Hydraulics and Scour 53
3.14.8 Environmental 57
3.14.9 Storm Water 60
3.14.10 Utilities 61
3.14.11 Railroad 66
3.14.12 Public Involvement 67

3.15 (Reserved) 68

3.16 (Reserved) 68

3.17 Bridge Types & Selection Guidance 68
3.17.1 Bridge Types and Economics 68
3.17.2 Substructure Guidance 70
3.17.3 Special Considerations for Federal-Aid Projects 70
3.17.4 Use of Salvage Materials 72

3.18 Bridge Layout 73
3.18.1 Site Constraints 73
3.18.2 Spans and Proportions 73
3.18.3 Bridge Length 75
3.18.4 Substructure Guidance 75

3.19 Bridge Safety and Accessability Requirements 75
3.20.1 Uniform Accessibility Standards 75
3.20.2 Inspection and Maintenance Accessibility 76

3.20 Bridge Security Design Considerations 79
3.20.1 Bridge Security Design Considerations 79
3.20.2 Placing Buildings Beneath ODOT Bridges 81

3.21 Structure Appearance and Aesthetics 83
3.21.1 General 83
3.21.2 Location and Surroundings 84
3.21.3 Horizontal and Vertical Geometry 84
3.21.4 Superstructure Type and Shape 85
3.21.5 Bent Shape and Placement 85
3.21.6 End Bent Shape and Placement 86
3.21.7 Parapet and Railing Details 86
3.21.8 Colors 86
3.21.9 Textures 87
3.21.10 Ornamentation 87

3.22 Bridge Name Plates & Markers 88
3.22.1 Existing Bridge Name Plates 88
3.22.2 Bridge ID Markers 88

3.23 (Reserved) 89

3.24 Accelerated Bridge Construction (ABC) Guidelines 89
3.24.1 Introduction 89
3.24.2 ODOT encourages and supports ABC Projects 90
3.24.3 Contracting Methods Allowed 90
3.24.4 Decision Making Framework 91
3.24.5 ABC – Decision and Economic Modeling Analysis Tool using the Analytic Hierarchy Process (AHP) 93
3.24.6 Steel Structures 98
3.24.7 Concrete Structures 98
3.24.8 Full Depth Deck Panels, End Panels or Approaches and Wingwalls 98
3.24.9 Seismic Related 99
3.24.10 Use of Self-Propelled Modular Transporters (SPMT) 102
3.24.11 Geotechnical Consideration 102
3.24.12 Accelerated Embankment Construction 104
3.24.13 QA/QC, Quality Control for Prefabricated Concrete Elements 105
3.24.14 Cost Considerations 107
3.24.15 Listing of bridges replaced using ABC techniques: 109

Appendix – Section 3.3 – Bridge Scope Memo 110

Appendix – Section 3.4 – Roles & Responsibilities 111
A3.4.1 Bridge Designer 111
A3.4.2 Bridge Reviewer 113
A3.4.3 Bridge Checker 116
A3.4.4 Bridge Subject Matter Expert 117
A3.4.5 Bridge EDMS Specialist 118
A3.4.6 Bridge Quality Auditor 119

Appendix – Section 3.5 – Quality *120*

Bridge Designer QC Form **121**

Bridge Reviewer QC/QA Checklist **124**

Bridge Checker QC Form **126**

Bridge Quality Auditor QC Checklist **127**

Bridge EDMS QC Checklist **127**

Bridge Drafter QC Checklist for TS&L Plan Sheet(s) **127**

Bridge Drafter QC Checklist for Advance Plans (95%) Plan Sheets **127**

Appendix – Section 3.9 – Preliminary Design / DAP / TS&L *128*

TS&L MEMO **129**

TS&L NARRATIVE for BRIDGE REPLACEMENT **132**

TS&L NARRATIVE for BRIDGE STRENGTHENING **135**

TS&L NARRATIVE for PHASE 1 SEISMIC RETROFIT **137**

Appendix – Section 3.91 – Metric Conversion *139*

A3.91.1 Introduction 139
A3.91.2 Basic Units 140
A3.91.3 Derived Units 140
A3.91.4 Metric Conversion Factors 142
A3.91.5 Metric Procedural Rules 143
A3.91.6 Bridge Plan and Preparation Guidelines 143
A3.91.7 Miscellaneous Common Conversions 146

Note: Revisions for April, 2014 are marked with yellow highlight. Deleted text is not marked; past editions of the BDDM are available for comparison.

3.1 SECTION 3 – INTRODUCTION

BDDM Section 3 contains standards and practices pertinent to design procedures and quality processes for completing highway bridge and structure design.

See BDDM Section 1 for standards and practices pertinent to design of highway bridges and structures.

See BDDM Section 2 for standards and practices pertinent to detailing of highway bridges and structures.

3.1.1 Procedure and Process Guides

ODOT Project Delivery Guidebook

ODOT Practical Design Strategy and Guide

Note: Revisions for April, 2014 are marked with yellow highlight. Deleted text is not marked; past editions of the BDDM are available for comparison.

3.1 SECTION 3 – INTRODUCTION

BDDM Section 3 contains standards and practices pertinent to design procedures and quality processes for completing highway bridge and structure design.

See BDDM Section 1 for standards and practices pertinent to design of highway bridges and structures.

See BDDM Section 2 for standards and practices pertinent to detailing of highway bridges and structures.

3.1.1 Procedure and Process Guides

ODOT Project Delivery Guidebook

ODOT Practical Design Strategy and Guide

3.2 BRIDGE DESIGN SOFTWARE

Outline:

3.2.1 Design Software

3.2.2 Software Verification

3.2.3 MathCAD Template Library

3.2.1 Design Software

(1) Supported Software

The following programs are used and supported by the Bridge Section:

SOFTWARE NAME	SYSTEM*	USE FOR	QUESTIONS, CONTACT
Midas Civil	7-64	bridge analysis and design	
DFSAP	7-64		
LPile	7-64		
Group	7-64		
ODOT-Col	7-32	column analysis	
PAP	7-64		
FHWA INSTRUCT	Terminal Services		
Brass Girder LRFD	7-64		
Brass Girder STD	7-64		
Brass Library Utility	7-64		
Brass Pole			
PGSuper	7-64	WSDOT precast design program	
PSBeam	7-64		
Response 2000	7-64	Reinforced concrete sectional analysis using Modified Compression Field theory	
SIMON	7-64		
STLBridge LRFD	7-64	steel bridge design using LRFD	
QConBridge	7-64	WSDOT live load analysis program for continuous frames	
RspBr2	7-32		
Convert 4.1	7-64		
Mathcad 15	7-64		
Mathcad Prime	7-64		

* Example: 7-64 indicates the software will run using Windows 7 – 64 bit.

(2) Unsupported Software

With the computer upgrade from Windows XP to Windows 7, most of the bridge legacy programs are out-dated. The following programs are incompatible with the 64-bit systems or will no longer be supported:

- Brig2d (replaced by RspBr2)
- CrkCol
- CrvBrgPc (Midas and GTStrudl have this function)
- DkElev (Microstation can perform this function)
- LdSort
- MStrudl (no longer in business) – Midas and GTStrudl have this function
- ODOT's pole program (uses MStrudl)
- Oregon's PSBeam (not Erikssons PsBeam, which ODOT now uses)
- Ultcol (Xtract can support this function)
- UltFtg (program needed to do simple analysis for footing design (on piling and shallow foundation).
- WinStrudl (no longer in business)
- XSection and WFrame – Caltrans programs
- Drain2dx – dynamic response analysis of inelastic plane structures
- GTStrudl – finite element analysis
- LUSAS
- SAP 2000 – finite element analysis
- SimQuake – DOS – simulation of time, position, and magnitude of earthquakes
- Xtract – CalTrans – substitute for XSection and WFrame http://www/imbsen.com/xtract.htm

3.2.2 Software Verification

[Reserved for future use]

3.2.3 MathCAD Template Library

[Reserved for future use]

3.3 BRIDGE DESIGN PROCESS (DESIGN-BID-BUILD), OVERVIEW

Outline:

3.3.1 Scoping

3.3.2 Project Initiation (Kick-Off)

3.3.3 50% TS&L (Proof of Concept Plans)

3.3.4 TS&L Report

3.3.5 Design Acceptance Plans Package

3.3.6 Preliminary Plans Package Milestone

3.3.7 Advance Plans Package Milestone

3.3.8 Final Plans Package Milestone

3.3.9 PS&E Milestone

3.3.10 Bridge Design Close-Out

3.3.1 Scoping

The Project – Scoping involves a reconnaissance level look at one or more alternatives for a project. It involves more planning, conceptual design, and description than the project-level design performed after STIP programming. This level of planning assists in securing funding levels and determining 'Level of Effort' required by the various work units. Site constraints are identified, and assumed or known design exceptions or deviations are noted, as well as anticipated outsourcing of work.

Bridge Design – Potential Bridge Program projects are initiated by the Bridge Program Unit from queries run on the State's Bridge Data. A 'Desk Scope' is completed, and a Bridge Scope Memo drafted (See Appendix Section 3.3). This information is then sent to the Region for 'Field Scoping'. After the Region Scoping Team has performed the 'Field Scope', it is sent back to the Bridge Program Unit for review and reconciliation, and the final Bridge Scope Memo prepared. The final Bridge Scope Memo is then sent back to the Region Area Manager for assignment to a Project Leader after STIP programming, and eventually Project Initiation. Also see Highway Division Directive DES 01.

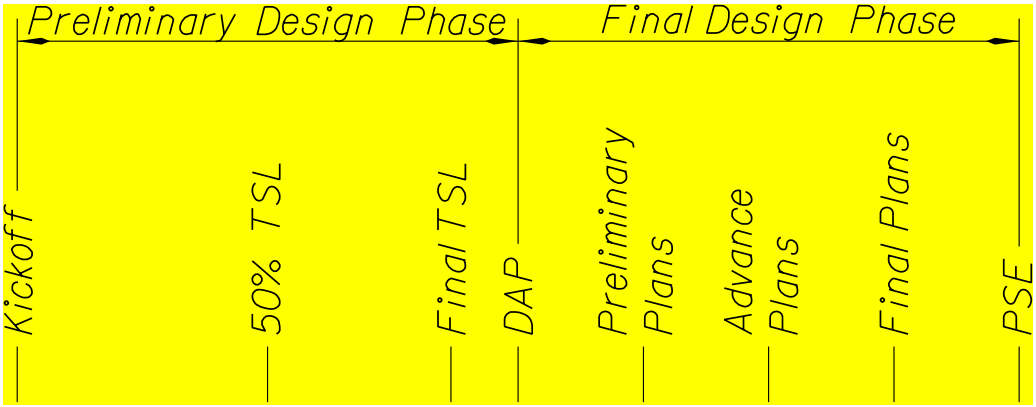

3.3.2 Project Initiation (Kick-Off)

The Project – Project Initiation is the point in time in which the project is 'kicked off' by the Project Leader. Final refinements to the scope, schedule and budget should occur at the 'Kick off' Project Team meeting.

Bridge Design – A few weeks prior to a project's kick-off, the Reviewer, Designer and Checker assignments are verified by the Bridge Design Manager. The Reviewer then meets with the Bridge Designer to review the Bridge Scope Memo; the project's scope, schedule and budget; and to prepare for the Project Kick-Off Meeting. The Bridge portion of the Region Quality Plan is also reviewed at this time, and supplemented to cover any project specific needs. Also see PDLT Operational Notice PD-02.

3.3.3 50% TS&L (Proof of Concept Plans)

The Project – Concept Plans consists of enough detail to "proof" the project concept that has been put forth. Site constraints are identified, and alignments should be close to final. Consider permanent and temporary traffic control, and note specialty specification items. Cost estimates should include many of the bid items.

Other work that should be complete at this stage include: survey control established, survey topography gathered, survey base map produced, existing right of way determined, environmental base map produced, Area of Potential Impact (API) identified, draft utility conflicts identified, horizontal and vertical alignments calculated, bridge bent locations set, retaining wall locations set.

Bridge Design – The Alternatives Study and a rough draft of the TS&L Narrative should be complete and ready to review with the Reviewer. Perform a Bridge Design Standards Assessment and create a list of design deviations for each alternative. The Engineer's Estimate @ TS&L should include the "significant cost" bid items. A draft TS&L Plan Sheet may be prepared to include with the other project Concept Plans; coordinate need with the Project Team.

3.3.4 TS&L Report

The Project – Is nearing the Design Acceptance Plans (DAP) milestone.

Bridge Design – The TS&L Report (consisting of the Alternatives Study, TS&L Memo or Narrative, TS&L Plan Sheet, Engineer's Estimates, and Design Deviations/Exceptions) is complete, has been reviewed and approved by the Bridge Reviewer, and is ready to publish in the DAP. Submit TS&L Report to the Project Leader.

3.3.5 Design Acceptance Plans Package

The Project – Design Acceptance Plans (DAP) provide sufficient detail of project elements and staging to identify right of way and utility impacts, utility relocation needs, and to allow application for permits. Staging should be complete except for minor details. Write specialty specs with enough detail to give reviewers an idea of the work and pay items involved. Cost estimates should include most of the bid items, although quantities will not be accurately calculated at this time.

At this milestone, alignments are final and the project 'footprint' is set; right of way, utility and environmental impacts are known. Changes after this stage has been completed should be seldom needed, and the work after this stage is adding detail and refining the design. Each project team member should review others' DAP deliverables to ensure the work is compatible between disciplines, and there are no discrepancies.

Roadway will often take the lead on common products, such as distributing the DAP and compiling a

complete cost estimate. Roadway may produce a Design Narrative that incorporates all sections' commentaries. Reference may be made to other complete documents, such as the Bridge TS&L Report, providing only minimal data in the Design Narrative for such sections.

Some items that should be done at or just after the DAP milestone include:

- Bridge: Alternatives Study, TS&L Report, Approved Design Deviations, Information for permits
- Roadway: Approved Design Exceptions, Project Narrative, DAP Cost Estimate
- Geotechnical: Preliminary Geotechnical recommendations documented
- Hydraulics: Hydraulic recommendations and plans

Bridge Design – Respond to any needs identified by the Project Leader. Attend the Design Acceptance Workshop (DAW), if scheduled.

3.3.6 Preliminary Plans Package Milestone

The Project – Preliminary Plans incorporate adjustments that are needed due to further refinement with right of way, utility, and permitting negotiations that have occurred. Decisions affecting the footprint of the project should be made by this time. All plan sheets should be started and included in the review package. Include boilerplate special provisions (i.e., compilation of boilerplate special provisions straight from the ODOT webpage; without "refining" work). Cost estimates are to include all bid items with a rough-calculated quantity. Each project team member should review others' Preliminary Plans deliverables to ensure the work is compatible between disciplines, and there are no discrepancies.

Some items that should be done at or just after the Preliminary Plans milestone include:

- Bridge: Progress Plans, Cost Estimate, List of anticipated special provisions
- Roadway: Progress Plans, Bid Summary/Cost Estimate
- Geotechnical: Draft Geotechnical Report
- Hydraulics: Draft Hydraulics Report, Storm Water Management Plan
- Environmental: Obtaining permits is continuing during this phase
- Utilities: Work with utility companies to establish utility relocations

Bridge Design – Start structural analysis calculations and prepare "preliminary" construction plans. All plan sheets should be started and prepared to approximately 50% complete, showing the basic geometry of all major elements. Identify boilerplate special provisions to include in the Preliminary Plans Package using SPLIST. Complete the Engineer's Estimate @ Preliminary Plans including all bid items with a rough-calculated quantity. Provide bridge deliverables to the Project Leader for inclusion in the Preliminary Plans review package.

3.3.7 Advance Plans Package Milestone

The Project – Advance Plans include all items necessary to bid and build the project. Complete special provisions, including specialty special provisions. Complete cost estimates, including a complete itemized list of bid items and calculated quantities. Each project team member should review others' Advance Plans deliverables to ensure the work is compatible between disciplines; and review the entire plan set for clarity and consistency.

Some items that should be done at or just after the Advance Plans milestone include:

- Bridge: Advance Plans, Cost Estimate, Special Provisions, Construction Schedule
- Roadway: Advance Plans, Cost Estimate, Special Provisions, Construction Schedule
- Geotechnical: Stamped Geotechnical/Foundations Report
- Hydraulics: Stamped Hydraulics Report, stamped Storm Water Management Plan
- Environmental: Obtaining permits may be continuing during this phase

Bridge Design – Complete structural analysis calculations and prepare "advance" construction plans. Prepare plan sheets to approximately 95% complete, including all geometry and details necessary for bidding and construction. Complete draft special provisions, and Engineer's Estimate @ Advance Plans, including accurately calculated quantities. Complete the Engineer's Estimate of Probable Construction Schedule. Provide bridge deliverables to the Project Leader for inclusion in the Advance Plans review package. Provide bridge deliverables to the Bridge Checker for detailed structural QC check.

3.3.8 Final Plans Package Milestone

The Project – Final Plans consist of printing and signing final prints of the design work and finalizing the PS&E package.

Some items that should be done at or just after the Final Plans milestone include:

- Bridge: Final Plans, Cost Estimate, Final Special Provisions, Final Construction Schedule
- Roadway: Final Plans, Cost Estimate, Final Special Provisions, Final Construction Schedule
- Environmental: Approved permits

Bridge Design – Address comments from the detailed structural QC check and other reviews. Finalize structural analysis calculations and prepare "final" construction plans. Complete plan sheets (100%). Complete final special provisions, final Engineer's Estimate of Probable Construction Schedule, and Engineer's Estimate @ Final Plans. Provide bridge deliverables to the Project Leader for inclusion in the Final Plans package. Also see PDLT Operational Notice PD-02 and Final PS&E Submittal Checklist, and ensure the Bridge-related aspects of this Notice are complete.

3.3.9 PS&E Milestone

The Project – PS&E is the point in time of the project in which all the contract documents prepared by the Project Team are submitted to the Office of Project Letting by the Project Leader to begin the process of advertising and bid letting.

Bridge Design – Complete (to this point in time) the structural analysis calculation book(s). Make a pdf of the calculation book and submit to Reviewer. Assist the Project Leader to address any PS&E Package deficiencies before Advertising; and to address any RFIs and Addendum Letters during Advertising. Prepare bridge load rating.

3.3.10 Bridge Design Close Out

Bridge Design – Within 60 days after Award, complete 'Bridge Design Close-Out' documents, and ensure all Bridge Quality documents are received and retained in the Bridge project file system.

3.4 ROLES & RESPONSIBILITIES

Outline:

3.4.1 Key Personnel

3.4.2 Large or Multiple Bridge Projects

3.4.1 Key Personnel

The following is a list of 'key' roles and responsibilities related to the design of a bridge. (It should be noted that this is not an exhaustive list of responsibilities and duties for the position noted.) This list is intended to supplement the ODOT Project Delivery Guide (PDG), not supersede it. Also see PDLT Operational Notice PD-01.

State Bridge Engineer

- The role of the State Bridge Engineer is to provide management and leadership to the State's Bridge Engineering Section.
- The State Bridge Engineer is responsible for:
    - Overseeing the Bridge Program.
    - Overseeing the Bridge Operations and Standards Unit.
    - Overseeing the Bridge Preservation Design Unit.
    - Overseeing the Regional Bridge Design Unit.

Bridge Program Manager

- The role of the Bridge Program Manager is to provide management and leadership to the State's Bridge Program Unit.
- The Bridge Program Manager is responsible for:
    - Developing and programing the Bridge Program STIP.
    - Approving final scope of work for Bridge Program projects.
    - Approving changes to and funding for Bridge Program projects.

Bridge Standards & Practices Manager

- The role of the Bridge Standards & Practices Manager is to provide management and leadership to the State's Bridge Operations and Standards Unit.
- The Bridge Standards & Practices Manager is responsible for:
    - Providing Subject Matter Experts for Bridge Designers and Drafters to consult with during the development of projects.
    - Maintaining the Bridge Design Quality Program, and providing Quality Auditors to audit bridge designs.
    - Maintaining the Bridge Design and Drafting Manual.
    - Maintaining the Bridge Standard Drawings and Details.
    - Modifying existing or developing new standards for design.
    - Providing technical training to bridge designers and drafters.

Bridge Design Manager

- The role of the Bridge Design Manager is to provide management and leadership to the State's Regional Bridge Design Unit.
- The Bridge Design Manager is responsible for:
  - Satisfying the staffing needs of the various bridge and structural analysis needs by providing the appropriate resources.
  - Developing and implementing strategies to ensure the sustainability of the bridge design technical discipline statewide.

Bridge Design Leadworkers

- The role of the Bridge Design Leadworker is to represent the Bridge Design Manager in the regions.
- The Bridge Design Leadworker is responsible for:
  - Performing lead worker duties associated with the Regional Bridge Design Unit.

Bridge Design Reviewer

- The role of the Bridge Design Reviewer is to perform the QC/QA design review from prior to Project Initiation through Project Award.
- The Bridge Design Reviewer is responsible for:
  - Checking in with, and mentoring, the Bridge Designer and Checker at key points in time to ensure work is progressing in a satisfactory manner to meet or beat schedule and budget.
  - Reviewing work and deliverables prepared by the Bridge Designer and Checker.

Bridge Designer

- The role of the Bridge Designer is to provide structural analysis and design for the Agency's maintenance and other structural design related needs.
- The Bridge Designer is responsible for:
  - Performing structural analysis and design for bridges and other highway related structures.

Bridge Design Checker

- The role of the Bridge Design Checker is to perform the QC bridge design check of the structural analysis and design for bridges and other highway related structures.
- The Bridge Design Checker is responsible for:
  - Performing the QC bridge design check of the structural analysis and design for bridges and other highway related structures.

Bridge Design Project Lead

- The role of the Bridge Design Project Lead is to lead and coordinate the bridge design on projects with multiple bridge designers or bridges.
- The Bridge Design Project Lead is responsible for:
  - Coordinating design, estimating and specification writing among the bridge designers on the bridge project design team.
  - Reviewing developing bridge designs to ensure consistency is maintained between bridge designs.
  - Attending Project Team meetings and representing the bridge project design team.

ODOT Project Leader

- The role of the Project Leader is facilitating and coordinating project teams.
- The Project Leader is responsible for:
  - Scope, schedule and budget for projects developed using ODOT staff.

A&E Project Manager

- The role of the A&E Project Manager is facilitating and coordinating project teams.
- The A&E Project Manager is responsible for:
    - Scope, schedule, budget, and quality of contracted projects/work.

Local Agency Liaisons

- The role of the Local Agency Liaison is to manage project development for local government projects.
- The Local Agency Liaison is responsible for:
    - Delivery of local government projects, including local bridge projects.

Region Tech Center Manager

- The role of the Region Tech Center Manager is to provide management and leadership to the Region Tech Center.
- The Region Tech Center Manager is responsible for:
    - Managing technical staff assigned to the Region involved in project development.
    - Developing and implementing a design quality control program within the Region Tech Center.
    - Ensuring project work is consistent with the Region Quality Plan.
    - Monitoring quality assurance performance.

Consultant Project Manager (CPM)

- The role of the Consultant Project Manager is to serve as project leader in the delivering of entire projects using full-service consulting contracts.
- The Consultant Project Manager is responsible for:
    - Coordinating with consultants for delivery of full-service outsourced projects.
    - Scope, schedule and budget for projects developed using outsourced staff.

Project Managers

- The role of the Project Manager is to administer contracts for construction.
- The Project Manager is responsible for:
    - Construction management for in-house and outsourced projects.

Area Manager

- The role of the Area Manager is to oversee the complete project lifecycle including: scoping, preliminary engineering, and construction phases of work.
- The Area Manager is responsible for:
    - The delivery of projects in their area.

The A&E Bridge Design Consultant

- May be contracted to perform the design duties associated with the Bridge Project Lead, Senior Bridge Engineer, Bridge Engineer, Bridge Designer, Bridge Design Reviewer, or Bridge Design Checker for individual projects or “program” of projects.
- Should not be contracted to perform “Owner” duties of the State Bridge Engineer, Bridge Program Manager, Bridge Standards & Practices Manager, Bridge Design Manager, or Bridge Design Leadworker.

3.4.2 Large or Multiple Bridge Projects

Large design projects with multiple or complex structures usually involve several Designers and Drafters. Often, these large projects can be done more efficiently if a Lead Designer and Lead Drafter organize and manage the bridge design and drafting.

The following are guidelines for the Bridge Design Team Lead Designer. (*Section 2* discusses guidelines for the Lead Drafter.) Before the project kick-off the Lead Designer and Drafter should review these guidelines and meet with the Bridge Reviewer to discuss the project and these duties.

Beginning of Project – The Lead Designer should:

- Communicate to project team members and other ODOT units as well as outside organizations that he or she will be the bridge design contact person for the project
- Obtain available design information

Preliminary and Final Design Phases – The Lead Designer should monitor design and drafting work, which includes:

- Attend Project Team meetings
- Be aware of the status of design and drafting in relation to lead-time required to meet submittal deadlines and bid-opening dates (Request help as needed to meet deadlines.)
- Maintain project records and update the project team by keeping:
    - A file of correspondence and decisions that affect design
    - Project team members informed, by memos or meetings, of any decisions or changes
    - Design Reviewer aware of project status and any changes that develop
- Be available to project team members, especially new designers, and encourage them to ask questions and share some of their assumptions for design and analysis before they start on a major modeling and design task
- Coordinate preparation of Bridge deliverables
- Review Bridge Plans for uniformity of design/drafting practices and detailing
- Review Bridge deliverables for completeness before submittal to Design Reviewer
- Stay informed about what is happening with all project bridges in order to answer questions from others in the absence of other bridge design team members

3.5 QUALITY[1]

Outline:

3.5.1 Introduction

3.5.2 Definitions

3.5.3 Design Quality Plans

3.5.4 Bridge Design Quality Documents

3.5.5 Design Quality 'Touch Points'

3.5.6 Design Reviews

3.5.7 Design Checks

3.5.8 Qualifications of Designer, Checker & Reviewer

3.5.9 Performance Measures

3.5.10 Troubleshooting Quality Issues

3.5.11 Recovery Plans

3.5.12 Quality Audits

3.5.13 Work Assignments

3.5.14 Training & Mentoring

3.5.1 Introduction

Quality Control and Quality Assurance is based on:

- Quality is achieved by adequate planning, coordination, supervision, and technical direction.
- Quality is achieved by focusing on preventing problems or errors rather than reacting to them.
- Quality is verified through monitoring, checking, and reviewing work activities, with documentation by experienced, qualified individuals who are not directly responsible for performing the work.
- Quality should ensure that the work is done correctly the first time. (Appropriate knowledge and experience levels, appropriate design team, appropriate project management, appropriate communication of project scope, appropriate communications, appropriate attention at the appropriate time by members of the project team.)

The owner plays the most important role in the quality and success of a project from design through construction. This applies to in-house design and consultant design as well as design-build design. The owner must clearly establish the requirements and expectations of a project through RFP design documents, contract plans, and other design or construction related documents. These requirements and expectations must be communicated and understood by the designer and the construction contractor. The owner, the designer, and contractor are then expected to work together to meet the requirements and expectations.

[1] FHWA, Guidance on QC/QA in Bridge Design In Response to NTSB Recommendation (H-08-17), August 2011

A Quality Control / Quality Assurance (QC/QA) program establishes the formal office or organizational procedures or practices for ensuring the owners requirements and expectations are fully met. A QC/QA program provides checks and balances within an organization to assure quality in the final contract plans and specifications. QC/QA programs are implemented at different levels or phases of project activities. QC/QA is more than performing a design check and review to the design calculations and contract plans. Design QC/QA starts at Project Initiation and is an ongoing process through Project Award and Construction.

Overall Project QC/QA will be planned and carried out primarily by the Tech Center Manager, Project Leader or Project Manager. The process, however, involves every member of the project team, and others, such as: Region Tech Center Manager, Project Leader (PL), Project Manager (APM), Region Area Manager, Bridge Checker, Bridge Reviewer, State Bridge Engineer, Bridge Program Manager, Bridge Standards & Practices Manager, Senior Bridge Engineer, Bridge Subject Matter Experts, ODOT Structural Materials Engineer, ODOT Construction Engineer, ODOT Maintenance Engineer, and the ODOT Office of Project Letting Quality Engineers.

In the bridge design phase, the bridge designer is responsible for making sure his/her calculations and drawings are accurate and meeting the requirements of the design. The bridge designer performs QC of his/her own work by establishing procedure for self-checking the work for accuracy and correctness. The checker performs QC of the designer's calculations, plans, specification, and estimates. The reviewer, practicing QA, is responsible for reviewing the work of the bridge designer to assure accuracy and correctness in meeting the design requirements and expectations of the bridge owner.

3.5.2 Definitions

Quality: The degree to which a product or service meets or exceeds a customer's requirements and expectations.

Quality Management: The overall management function that determines quality policy, objectives, and responsibilities, and their implementation by means such as quality planning, quality assurance, quality control, and quality improvement within the system.

Quality Control (QC): In general: the operational activities put in place to control the quality of a product or service. These include such activities as providing clear decisions and directions, diligent supervision by experienced individuals, immediate review of completed activities for accuracy and completeness, and accurate documentation of all decisions, assumptions, and recommendations. Quality control procedures, if followed, should ensure that the work is done correctly the first time.

As it relates to bridge design; procedures of checking the accuracy of the calculations and consistency of the drawings, detecting and correcting design omissions and errors before the bridge design plans are finalized, and verifying the specifications for the load-carrying members are adequate for the service and operation loads.

Quality Assurance (QA): The certainty that products and services meet the requirements for quality. The objective of quality assurance is the continual improvement of the total delivery process to enhance quality, productivity, and customer satisfaction. Essentially, quality assurance describes the process of enforcing quality control standards. When quality assurance is well-implemented, progressive improvement in terms of both reducing errors and omissions and increasing product usability and performance should be observed. Quality assurance should function as a "voice" for the customer, a reminder that the work product is intended for use by a customer. (Essentially, QA is what the project manager does to confirm that a QC program is effective and provides feedback upon which further development of the QC program can be made.)

As it relates to bridge design; procedures of reviewing work to ensure quality controls are in place and defective in preventing mistakes, and consistency in the development of bridge design plans and

specifications.

Quality Control Plan: The comprehensive, well-defined, written set of procedures and activities aimed at delivering products that meet or exceed a customer's expectations, as expressed in contract documents and other published sources. A quality control plan will identify the organization or individuals responsible for quality control and the specific procedures used to ensure delivery of a quality product. A quality control plan will also detail quality assurance measures and the method of accountability and required documentation.

Designer: An individual directly responsible for the development of design calculations, drawings, specifications, and contract documents, and review of shop drawings related to a specific bridge design with a level of technical skills and experience commensurate with the complexity of the subject structure or structures being designed.

Checker: An individual responsible for performing a full technical check of the structural design calculations, drawings, specifications and contract documents.

Reviewer: An individual responsible for performing QA procedures for assuring that QA procedures have been performed.

Engineer of Record: An individual responsible for all bridge structural aspects of the design of the structure including the design of all of the bridge's systems and components. The Engineer of Record normally seals and signs the final contract plans and specifications.

3.5.3 Design Quality Plans

ODOT Bridge HQ – As it relates to bridge design, ODOT Bridge HQ maintains the baseline QC/QA procedures that form the basis for each Region's Bridge Design Quality Control Plan.

ODOT Regions – Each Region has a Design Quality Control Plan that provides guidance to technical staff on the preparation of high quality, cost effective, deliverables that meet the expectations of its customers.

A&E Consultants – All design consultants shall have a documented Design Quality Plan (DQP) for its design. This applies to the Engineer of Record and any and all of its subconsultants. In lieu of subconsultants having their own documented DQP, the Engineer of Record should assume that responsibility for their subconsultants. The DQP should be furnished to ODOT as a Start-Up deliverable in the design contract, and as requested. ODOT should review the DQP to ensure it meets the intent of the Agency's Quality Program(s), and refer to it when reviewing consultant work deliverables.

Local Agency Quality Control Plan – See Local Agency Guidelines (LAG) manual

3.5.4 Bridge Design Quality Documentation

The following is a list of the Bridge documents to retain. Electronic pdf files may be submitted in lieu of paper hardcopies. For internal designs, submit these documents to the Bridge Design Manager (who will send to the Bridge EDMS Specialist) on the scheduled due date. For external designs, the Design Contractor will submit these documents to the ODOT Project Manager identified in the contract. The ODOT PM will send the documents to the assigned Bridge Reviewer; and the Bridge Reviewer will send the documents to the Bridge Design Manager.

1. Bridge Scope Memo, original and any revisions
2. A&E Personal Services Contract, if applicable
3. Design Quality Plan

4. TS&L Report
    a. TS&L Memo or TS&L Narrative, original and review copy
    b. TS&L Plan Sheet(s), original and review copy
    c. Engineer's Estimate @ TS&L, original and review copy
    d. Standard Design Assessment Table, original and review copy
    e. Design Deviations and Exceptions, original and review copy
5. Progress/Preliminary Plans Package
    a. Progress Plans Plan Sheets, original
    b. Engineer's Estimate @ Progress Plans, original
    c. SPLIST, original
6. Advance Plans Package
    a. Advance Plans Plan Sheets, original, check copy, and review copy
    b. Engineer's Estimate @ Advance Plans, original, check copy, and review copy
    c. Engineer's Estimate of probable construction schedule, original, check copy, and review copy
    d. Draft Special Provisions, original (all bridge related sections), check copy (redlined pages only), and review copy (redlined pages only)
7. Final Plans Package
    a. Final Plans Plan Sheets, original, check verification copy, and review copy
    b. Engineer's Estimate @ Final Plans, original, check verification copy, and review copy
    c. Engineer's Estimate of probable construction schedule, original, check verification copy, and review copy
    d. Final Special Provisions, original (all bridge related sections), check verification copy (all bridge related sections), and review copy (marked pages only)
8. Calculation Book(s)
    a. Note: Unless a separate calculation book is necessary, put TS&L calculations in the Final Design calculation book.
    b. Final Design calculations, Designer's calculations
    c. Final Design Check calculations, Checker's calculations
9. Checker Review Comment Forms
    a. Review Comments, Responses, and QC Verification
10. Reviewer Review Comment Forms
    a. Review Comments, Responses, and QC Verification
11. Reviewer QC/QA Checklist

Note 1: The supporting Hydraulics and Geotechnical Foundations Reports are retained in the ODOT Geo-Environmental Section.

Note 2: See the BPPM for the EDMS Specialist role and responsibilities, details regarding storage of the Bridge Quality Documents (where they are stored, how long they are stored), and how they may be accessed.

3.5.5 Bridge Design Quality 'Touchpoints'

Internal designs will typically have the following QC/QA 'Touch Points':

- Project Scoping
- Project Initiation – Scope confirmation, and Reviewer, Designer, & Checker assignments
- 50% TS&L (by schedule) – progress check-in
- TS&L Report
- DAP/DAW – Review comments
- Preliminary/Progress Plans Package
- Advance Plans Package – Review comments
- Final Plans Package – Comment resolution verification
- PS&E Package – Bridge design quality documentation

- Project Quality Audit
- Project Close-out

External designs should have similar QC/QA 'Touch Points'. See the consultant's Design Quality Plan for specifics.

3.5.6 Design Reviews

3.5.6.1 Bridge Reviewer

- Responsible for performing QA procedures or assuring QA procedures have been performed.
- May request Subject Matter Expert review (not a check), including welding, protective systems, and bridge inspection
- May request Structural Materials Review
- Ensures that Construction Review has been performed
- Ensures that Maintenance Review has been performed

3.5.6.2 Peer Reviews

- For major projects involving unusual, complex, and innovative features, a peer review may be desirable to raise the level of confidence in the quality of design and construction. A peer review is generally a high-level QA review by a special panel of professionals specifically appointed by the State Bridge Engineer to meet the demands for quality and accuracy, recognizing the complexity of the design. Peer review is an effective way to improve quality and to reduce the risk of errors and omissions. The need for such peer reviews is at the discretion of the State Bridge Engineer.

3.5.6.3 Project Leader / Project Manager Review

- Responsible for coordinating and leading reviews and quality processes.
- Leads Project Team Review (including a review by individual team members to coordinate design items between disciplines.)

Commentary: ODOT Quality Program also calls this a "Peer Review". However, this subsection has intentionally not been included as a second bullet to 3.5.6.2 because industry peer review is typically understood to mean people of the same background – in this case, all with a background of bridge design.

3.5.6.4 State Bridge Engineer Review (Statewide Bridge QA)

For internal designs:

- Bridge Design Manager
- Bridge Standards & Practices Manager (Subject Matter Expert review (not a check), including welding, protective systems, and bridge inspection)
- Bridge Inspection Manager for bridge inspection features

3.5.7 Design Checks

The expected Class of Check is noted on the Bridge Scoping Memo. At the end of the Scoping process, Bridge Scoping Memos are prepared for each bridge in the Bridge Program for that STIP update (one memo per bridge). At that same time an assessment will be made of the bridge geometry and work based on the table below and an expected Class of Check noted on the Bridge Scoping Memo. In some cases, based on geometry for example, the entire bridge may require "Independent" check calculation. In other cases, based on elements, the bridge may require "Independent" check calculations for specific

elements, and “Line-by-Line” checks of the Designer’s calculations for the remainder of the bridge. This will be noted on Bridge Scoping Memo based on the best information available at the end of the Scoping process. The Bridge Designer and the Bridge Reviewer should review the Bridge Scoping Memo before checking starts to ensure the Class of Check is appropriate. Changes to the expected Class of Check must be approved by the Bridge Reviewer before proceeding with the check. Changes to the Class of Check require the Bridge Scoping Memo be revised (for Quality documentation purposes). Revise the Bridge Scoping Memo with a ‘pen-and-ink’ note to show the new Class of Check and the Bridge Reviewer’s initials.

Design checks fall into one of the following Classes of Checks:

Class I:
- Prepare “Independent” structural calculations
- Check plans, specifications, and estimate

Class II:
- Perform “Line-by-Line” check of Bridge Designer’s structural calculations
- Check plans, specifications, and estimate

Class III:
- No structural calculations
- Quantity calculations
- Check plans, specifications, and estimate

A “Line-by-Line” check means the Checker will work from a copy of the Designer’s calculations, going through line-by-line and redlining. Besides checking line by line, the Checker must also ask “Has the Designer included all calculations required?” Generally there is a time savings in performing this type of check. Other benefits of this type of checking include: calculation book is complete (for design purposes) at PS&E, and junior designers can see senior designers work, content is complete and understandable (especially worthwhile if have to make revisions during construction after several months of not working on the design).

An “Independent” check means the Checker will prepare his or her own calculations without or before seeing the Designer’s calculations. After the Checker has prepare his or her calculations the Checker and Designer compare results. Generally this type of check takes longer than a “Line-by-Line”. The advantage is two separate sets of calculations are made; disadvantages include: tendency for the Designer not to complete his or her design calculation book, content can become cryptic, abbreviated, and difficult to follow.

To perform a “Line-by-Line” check the Checker obtains a copy of the Designer’s calculations. The Checker should review the Table of Contents to ensure it is in order, complete, and that all expected entries are included. The Checker should then review the Givens and the Assumptions. Then the Checker can go through the calculations line by line. Any comments should be redlined. Redlining can be done by hand with a red pencil, or electronically in a pdf file, if have the version of software that allows this.

Use the following table to determine if a "Line-by-Line" check is acceptable, or if an "Independent" check is required:

	Check Calculations	
	"Line-by-Line"	"Independent"
Geometry / Layout	Regular; Tangent; Simple-Span	Irregular; Curved[1]; Skewed[2]; Multi-Span
Standard Drawings / Details	Acceptable	If judged necessary
Major / Unusual / Complex	Not acceptable	Acceptable
Seismic Design / Retrofit [3]	A & B	C & D
Prestress Slabs [4]	Must have successfully completed 2 prior designs	< 2 prior designs
Prestress Boxes [4]	Must have successfully completed 2 prior designs	< 2 prior designs
Prestress Tubs [4]	Must have successfully completed 2 prior designs	< 2 prior designs
Prestress Girders [4]	Must have successfully completed 2 prior designs	< 2 prior designs
Post-Tension anything	Not acceptable	Acceptable
Steel Plate Girder	Must have successfully completed 2 prior designs	< 2 prior designs
Steel Trapezoidal Girder	Must have successfully completed 2 prior designs	< 2 prior designs
Abutments	Regular; Non-Integral	Integral & Semi-Integral
Columns	Not acceptable	Acceptable
Bridge Strengthening	Must have successfully completed 2 similar designs	< 2 prior designs
Rail Retrofits	Must have successfully completed 2 similar designs	< 2 prior designs

Footnotes:

1. Curvatures with Radius < 1000 feet
2. Skew > 20 degrees
3. Includes Capacity Protection design
4. ODOT Standard shapes only; otherwise do "Independent" calculations

Notes:

- If the bridge or bridge element you are checking is not described in this table then prepare "Independent" calculations.
- Any check starting as "Line-by-Line" can be escalated to "Independent" calculations with approval of the Bridge Reviewer. No check starting as "Independent" calculations may be reduced to "Line-by-Line".
- To request a deviation from the practice noted in this table see *Section 1.2.2*
- To suggest an addition to this table that you believe is a good candidate for "Line-by-Line" checking please send an email to the Bride Design Standards and Practices Engineer.

3.5.8 Qualifications of Designer, Checker & Reviewer

The designers, checkers, and reviewers are the key personnel to provide well-designed and constructible plans to build good quality bridges. The designers, checkers, and reviewers must be experienced in structural designs and familiar with the current AASHTO Bridge Design and Construction Specifications and the State's Bridge Design & Drafting Manual (BDDM).

1) Designer and Checker: The following are the desirable requirements for a bridge designer and checker:

- Possess a Professional License as a Civil Engineer or Structural Engineer in Oregon; or
- If the designer and checker does not have PE license, he or she should be under the direct supervision of a PE/SE licensed engineer who is in responsible charge for the design;
- The designer and checker's experience should be commensurate with the complexity of the bridge being designed.

2) Reviewer: The reviewer should be familiar with Bridge Engineering Section's standards and practices, and ODOT's project delivery and construction practices, procedures, and policies.

3.5.9 Performance Measures

Performance Measures are specific items/tasks to monitor to ensure the successful completion of something (e.g., a goal, a specific piece of work, a change in process, a person's assigned duties, etc.). The supervisor typically establishes these items to align with his/her responsibilities (e.g., Goals and Objectives, specific charges, etc.). These items can be for an individual or for a group; however, they should be assessed on an individual basis. These items typically become the basis of an individual's performance assessment/appraisal.

3.5.10 Troubleshooting Bridge Design Quality

This is not troubleshooting 'design delivery'; this is what to do if Bridge Design Quality is not being met.

- Early intervention.
- Discussion/Review by Bridge Design Manager, Region Tech Center Manager, and Bridge Reviewer.
- Review of approved design team by Bridge Design Manager.
- Review SOW for changes (actual and/or under-estimated) as it relates to needed knowledge/experience.
- Change resource's assignments before making resource reassignment.
- Provide training, if schedule allows (internal or external training).
- Provide coaching/mentoring of resource, if schedule allows.

3.5.11 Recovery Plans

The purpose of a recovery plan is to document specific tasks that need to be done, with dates the tasks need to be done, to get back on schedule or back in budget (i.e., revised performance measures). After "troubleshooting" any bridge design Quality issues, the Bridge Design Manager will prepare a brief narrative plan documenting these tasks/measures; keeping a copy and providing a copy to the Bridge Designer and the Bridge Reviewer.

3.5.12 Quality Audits

The following is a brief outline of the Quality Audit process that will be performed by the Quality Auditor on a random sample of projects. (see BPPM, Quality Auditor, for specifics):

- Collect Reviewer QC/QA Form
- On a regular schedule, perform random selection of project to perform quality audit
- Notifies Bridge Design Manager, Bridge Reviewer, and Bridge Designer
- Review Design Quality Plan(s)
- Audit Bridge Quality Documentation retained in the project file / EDMS
- If complete, prepare Audit Report noting findings
- If not complete, contact the Bridge Designer and discuss discrepancies
- If necessary, contact the Bridge Design Manager and requests data be completed and submitted
- Once data received, complete Audit Report
- Provide Audit Report to State Bridge Engineer, Bridge Design Manager, and Area Manager

3.5.13 Work Assignments

- Performed by the Bridge Design Manager.
- For internal, done based on knowledge, skills and abilities, and training needs.
- For external, done through RFP process and consultant selection (based on consultant proposal (i.e., response to RFP).)
- For Local Agencies, typically done through RFP process. Some Counties still eligible for Free Bridge Design through ODOT.

3.5.14 Training & Mentoring

Bridge Design Manager:

- Oversees the Resource Planning group with assignment of project Reviewer, Designer, and Checker.
- Evaluates and identifies skill gaps.
- Suggest or Recommend training courses to Subject Matter Experts.

Reviewer:

- Mentors Designers: Throughout course of reviewing a project (from Project Initiation to PS&E Package), the Reviewer is mentoring the project designer (rookie & veteran); and quite possibly training the rookie designer.
- Mentors Checkers: If during the course of reviewing a project, the Reviewer may elect to mentor the design checker.
- Mentors Reviewers: Veteran Reviewers will mentor and train new or less experienced rookie Reviewers.

Subject Matter Expert:

- Provides training in subject of expertise as needed (training may be one-on-one, one-on-many, external provider, etc.)

Training Coordinator (proposed):

- Maintains database of internal bridge design staff, their project assignments, their role on the project (Reviewer, Designer, or Checker), a short description of the project, and a short description of the bridge work performed.
- Provides report of this information as requested.

3.6 (RESERVED)

3.7 QPL / RESEARCH

Outline:

3.7.1 QPL

3.7.2 Research

3.7.1 Qualified Products List (QPL)

The Structure Services Unit of the Construction Section is responsible for the evaluation of products for use on construction and maintenance projects.

If a product is approved for use, it is included in the *Qualified Products List* (QPL) published every six months. The QPL is covered in *Section 00160.05* of the ODOT *Standard Specifications for Highway Construction* as modified by the special provisions. The special provisions of a project will tell which edition of the QPL is in effect for that contract.

A product can be evaluated as an “equal product” or a “new product”:

- Equal products are similar to ones currently used by ODOT and are covered by existing specifications or standards.
- New Products are ones not addressed by current specifications or standards.

After evaluation, a product’s status becomes one of the following:

- Conditional – Equal or new product will be allowed a trial installation on one project only, recommended for a demonstration project, or recommended as an experimental feature. See Section 3.17.3(3) “Experimental Features Program”.
- Qualified – Product is equal to existing approved products or has test results that meet ODOT specifications.
- Rejected - Product does not meet ODOT specifications or has failed performance testing.

Products with Conditional status will have trial installation on projects where they can be monitored during installation and for a limited performance period. The manufacturer or supplier is responsible for locating an active project, either construction or maintenance, for the proposed product. Normally, a product will be considered Conditional first, and then move to Qualified after it establishes a good track record. Of course, a previously qualified product can fall from grace and become rejected because of unsatisfactory field performance.

3.7.2 Research

(Reserved for future use)

3.8 (RESERVED)

3.9 PRELIMINARY DESIGN / DAP / TS&L

Outline:

3.9.1 Introduction

3.9.2 Purpose of TS&L

3.9.3 When is a TS&L needed?

3.9.4 TS&L Approval

3.9.5 Multiple Bridge Projects

3.9.6 TS&L Report

3.9.7 Alternatives Study

3.9.8 Bridge Design Standards Assessment

3.9.9 Design Deviations and Exceptions

3.9.10 TS&L Memo

3.9.11 TS&L Narrative

3.9.12 Engineer's Estimate @ TS&L

3.9.13 TS&L Plan Sheet(s)

3.9.14 TS&L Calculations

3.9.1 Introduction

Preliminary Design is the phase between the milestones Project Initiation (Kickoff) and Design Acceptance Package (DAP). The Preliminary Design phase concludes with the acceptance of the DAP (or cancelation of the project). When the project includes bridge structures the DAP will typically include a section for Bridges and will include one or more TS&L Reports.

The TS&L Report is prepared to provide the opportunity for the State Bridge Engineer and the Bridge Design Manager to have input on the type of bridge being designed. Items to be addressed include: use of high performance materials, use of new technologies, new innovative materials, opportunities for accelerated construction, unique/creative new uses of known materials, constructability, appropriateness of construction techniques, maintainability, inspectibility, cost-effectiveness, aesthetic requirements, corrosion protection strategy, improved details to eliminate existing problem areas on bridges (i.e., bridge expansion joints, fatigue prone details, bearings, etc.), hydraulic/scour analysis and deck drainage, geotechnical requirements and types of foundations. Preliminary design studies should consider the bridge location, length, width, span arrangement and superstructure system considering traffic requirements, safety measures, channel configuration, stream flow, etc. Feasible alternatives for a proposed bridge crossing

along with their merits and shortcomings, should be identified and discussed.

3.9.2 Purpose of TS&L

The purpose of a TS&L Report is to:

- Document the Alternatives Study;
- Document the preferred/recommended alternative (or option);
- Document "why" (the rationale, the justification) the preferred alternative or option was selected over the other alternatives or options;
- For the preferred alternative or option, document the selected type, geometry, size, and location;
- Document deviations from design practices; and
- Provide adequate background information so that reviewers, owners, or clients can effectively evaluate the proposed final design and approve proceeding to final design.

Note: if adequate background information is NOT provided the TS&L may be rejected, which could result in an undesirable delay in the project schedule.

Commentary:

There may be a misconception that the TS&L Report is prepared so that the Bridge Hydraulics Report, Geotechnical Subsurface Exploration, and Preliminary Geotechnical Reports can be prepared. In actuality, each of these documents should be prepared at the same time with each document preparer working in close coordination with the other document preparers.

A TS&L Report provides specific bridge information required by FHWA for their review and approval of projects using Federal funding (and recommended for projects without Federal funds). It is the concluding documentation of the Alternatives Study. The name was coined by FHWA circa 1990. The acronym TS&L stands for Type, Size & Location. The FHWA/ODOT Stewardship Agreement of the Federal Aid Program has delegated the TS&L review and approval process to ODOT for federal-aid projects that are designated as NOT Full Federal Oversight (FFO). ODOT will submit TS&L Reports to the FHWA on projects designated as FFO.

3.9.3 When is a TS&L needed?

A TS&L Report is required when:

- Typically, anytime work other than routine maintenance or emergency repair is performed on a bridge, or
- Whenever work is on primary longitudinal (e.g., girders) or transverse (e.g., crossbeams) load carrying elements.

When is it necessary to prepare a TS&L Narrative:

- Anytime an Alternatives Study is performed, or
- Whenever it is necessary to prepare structural calculations for the work.

When is it acceptable to prepare a TS&L Memo in lieu of a TS&L Narrative:

- Whenever work is on elements other than the primary longitudinal or transverse load carrying elements, or
- Whenever it is not necessary to prepare structural calculations for the work.

Commentary:

If an Alternatives Study of the primary longitudinal or transverse load carrying elements, or structural calculations is not necessary then a TS&L Memo may be prepared to:

1) document the nature of the work at the end of the Preliminary Design Phase and before starting the Final Design Phase, and

2) document the rationale for selecting between options for non-primary longitudinal or transverse load carrying elements.

If the scope of work at the end of the Preliminary Design Phase is the same as the scope of work at the beginning of the Preliminary Design Phase the TS&L Memo will simply document that the scope is the same. If the scope of work at the end of the Preliminary Design Phase has changed, the TS&L Memo should document the reasons why the scope has changed. For Bridge Program bridge projects, it is very important to have the concurrence of the Bridge Program Manager and the State Bridge Engineer before proceeding to Final Design. This is the primary reason for the TS&L Memo.

3.9.4 TS&L Approval

Under the direction of the Bridge Design Manger, the Design Reviewer will review and approve the TS&L Report. The TS&L Report will be signed by both the Bridge Designer and the Bridge Reviewer. The Bridge Reviewer's signature will constitute "approval" of the TS&L by a person knowledgeable in bridge design.

Commentary:

Prior to 2004 the ODOT Bridge Design Team Leader (Structural Manager) and the State Bridge Engineer "approved" the TS&L. After 2004, the Region Bridge Manager and, by virtue of the 'project development process', the Region Tech Center Manager and Area Manager formally "approved" the TS&L via their signature of the DAP Report.

3.9.5 Multiple Bridge Projects

For projects with more than one bridge structure, create a separate TS&L Report for each bridge structure. Creating a separate report for each bridge will:

1) make it easier to add or subtract bridges, should the scope change;
2) make it easier to focus discussions on individual bridges; and
3) not have to flip through pages info for other bridges that are not relevant to the discussion.

3.9.6 TS&L Report

TS&L Report is comprised of:

- TS&L Narrative or TS&L Memo
- Engineer's Estimate @ TS&L
- TS&L Plan Sheet(s)
- Bridge Design Standards Assessment
- Design Deviations and Exceptions
- Alternatives Study supporting data

3.9.7 Alternatives Study

Perform the Alternatives Study investigating at least three bridge types; considering such things as site/corridor context, site access, environmental factors, material availability, constructability, construction contractor knowledge/experience, and cost. Include this study in the design calculation book.

3.9.8 Bridge Design Standards Assessment

At the start of the Preliminary Design Phase prepare a table of bridge standards applicable to the design. Include references to Standard Drawings, Standard Details, BDDM references, AASHTO Design Code references, etc. and standard values; include actual design values; and include notation whether the actual design values meet or do not meet that standard. This table will become the basis for preparation of design deviations. Include this table in the design calculation book.

[Note: A template is in the works to aid in this assessment.]

3.9.9 Design Deviations and Exceptions

Whenever the actual design values do not meet a standard value prepare a design deviation. See *Section 1.2.2*. Include approved deviations and exceptions in the design calculation book.

3.9.10 TS&L Report with Memo

1. Cover Page
2. Signature Page
3. TOC
4. Body of Memo
    a. Project Information
    b. Rationale for selections between options
    c. Rationale for changes in scope
5. Engineer's Estimate @ TS&L
6. TS&L Plan Sheet(s)
7. Appendix
    a. Approved Design Deviations and Exceptions

A TS&L Memo template is provided in *Appendix Section 3.9*. An electronic file is forthcoming.

3.9.11 TS&L Report with Narrative

1. Cover Page
2. Signature Page
3. TOC
4. Body of Narrative, preferred alternative
    a. Project Information (location)
    b. Alternatives Studied
    c. Preferred / Recommended Alternative
    d. Bridge Design Criteria
    e. Mobility (ADT, # lanes to remain open, detours)
    f. Roadway (horizontal & vertical alignment, superelevation, roadway x-section)
    g. Hydraulics (design flood, ordinary high water, scour)
    h. Geotechnical & Foundations (subsurface conditions)
    i. Environmental Information & Constraints
    j. Traffic (signs, signals, illumination)
    k. Utilities (on bridge, near bridge)
    l. Railroad (clearances)
    m. Right of Way
    n. Superstructure (type, geometry, length, width, clearances)
    o. Substructure (type, geometry, size, clearances)
    p. Aesthetics
    q. Other Design Justification (if rationale for decisions made is not provided above)
5. Engineer's Estimate @ TS&L, preferred alternative
6. TS&L Plan Sheet(s), preferred alternative
7. Appendix
    a. Approved Design Deviations and Exceptions
    b. Alternatives Study of all other alternatives
    c. Plan sheets of all other alternatives, as needed
    d. TS&L Calculations (unless warrants separate calculation book)

Note 1: If the *Hydraulics Report* or *Foundation Report* is not available at the time the TS&L Narrative is written, always include comments about assumptions made in consultation with the Hydraulics or

Foundation Designer.

Note 2: Do not use the TS&L Narrative to provide all the data needed for environmental permitting. Include this permitting information in a separate memo. See *Section 3.14.8* for further guidance.

A TS&L Narrative template is provided in *Appendix Section 3.9*. An electronic file is forthcoming.

3.9.12 Engineer's Estimate @ TS&L

The Engineer's Estimate @ TS&L documents the estimated probable construction cost of the preferred alternative. Prepare an estimate for each alternative studied. The estimate typically is based on a rough calculation of quantities. Include estimate in TS&L Report.

3.9.13 TS&L Plan Sheet(s)

The TS&L Plan & Elevation Drawing is a single 11x17 sheet containing:

- Title Block
- Vicinity Map (with north arrow)
- Plan View (with north arrow)
- Elevation View
- Typical Section
- Construction Staging Section(s)
- Hydraulic Data (if applicable)
- TS&L General Notes

A second sheet may be included to show construction staging typical sections, if significant.

See *Section 2.6* for specific information pertaining to the drafting and detailing of the TS&L Plan & Elevation drawing.

Include plan sheets in the TS&L Report.

3.9.14 TS&L Calculations

Include any structural calculations prepared during the Preliminary Design Phase in the appendix of the TS&L Report.

3.10 FINAL DESIGN / PS&E

Outline:

3.10.1 Introduction

3.10.2 Sealing & Signing Requirements

3.10.3 Contract Plans

3.10.4 Specifications & Special Provisions

3.10.5 Engineer's Estimate of Probable Construction Cost

3.10.6 Engineer's Estimate of Probable Construction Schedule

3.10.7 Calculations & Calculation Books

3.10.8 Bridge Load Rating

3.10.9 Operations & Maintenance Manuals

3.10.1 Introduction

The Final Design Phase can begin after receiving approval of the DAP. For Design-Bid-Build projects, the Contract Documents are prepared during the Final Design Phase. These documents include sealed and signed construction plan sheets, Special Provisions, estimates of probable construction cost, and estimates of probable construction schedule. Other bridge deliverables prepared during the Final Design Phase include calculation books, the bridge load rating, and Operation and Maintenance manuals.

3.10.2 Sealing & Signing Requirements

ORS 672.002(10) requires the stamping engineer to be in 'responsible charge'; that is, to have supervision and control of the work.

- The Bridge Engineer of Record is to seal and sign the final Mylar Bridge drawings; other roles noted on the drawing may be signed or printed. Current practice requires only one stamp on the plans. (Refer to TSB11-02D)
- The Bridge Engineer of Record or the Bridge Designer is to seal and sign other applicable work products per TSB11-02D. (ODOT Intranet link: DES 05-02)
- The Bridge Checker is to seal and sign structural calculations he or she prepares.

It is expected that a person possessing a professional engineer's license in the State of Oregon will seal and sign his or her own work.

See ODOT Technical Services Professional of Record Guidance for further guidance.

3.10.3 Contract Plans

3.10.3.1 At Preliminary/Progress Plans

Start all plan sheets and show gross geometry of the elements. Start details if have information; however, it is not necessary to have all details shown at this time.

3.10.3.2 At Advance Plans

Complete "unchecked" plan sheets. All geometry and details are to be shown at this time. Prepare Check Print set of plan sheets for the Bridge Checker and the Bridge Reviewer.

3.10.3.3 At Final Plans

Correct plan sheets based on resolution of QC Check comments. Prepare mylar plan sheets for signatures.

3.10.3.4 At PS&E Package

Clear and complete detailed plans with information necessary to obtain a fair bid and to layout and construct the project.

3.10.4 Specifications & Special Provisions

3.10.4.1 At Preliminary/Progress Plans

Download SPLIST from the ODOT Special Provisions webpage and complete the checklist. A benefit of using SPLIST is the reference Special Provisions are also noted.

3.10.4.2 At Advance Plans

Complete a draft of the Special Provision package.

3.10.4.3 At Final Plans > Final Special Provisions

Complete the final Special Provision package.

3.10.4.4 At PS&E Package

Specifications, Supplemental Specifications, and Special Provisions necessary for construction of the project.

3.10.5 Engineer's Estimate of Probable Construction Cost

3.10.5.1 At Preliminary/Progress Plans

Calculated quantities of materials in the project, based upon the current Bid Item list.

3.10.5.2 At Advance Plans

Calculated quantities of materials in the project, based upon the current Bid Item list.

3.10.5.3 At Final Plans

Calculated quantities of materials in the project, based upon the current Bid Item list.

3.10.5.4 At PS&E Package

Calculated quantities of materials in the project, based upon the current Bid Item list. Estimate of the cost of design assistance during construction.

3.10.6 Engineer's Estimate of Probable Construction Schedule

3.10.6.1 At Preliminary/Progress Plans

Not applicable.

3.10.6.2 At Advance Plans

A Project Construction Schedule is required to be submitted with the PS&E Package per 2.2.j of the PS&E Delivery Manual. Refer to this manual, and prepare and submit a draft of the estimated probable construction schedule for the bridge or structure construction for review.

3.10.6.3 At Final Plans

Update the estimated schedule, and submit a final copy.

3.10.6.4 At PS&E Package

Not applicable. (A complete Project Construction Schedule, including the bridge and structure work will be submitted to the Office of Project Letting by the Project Leader or Project Manager.)

3.10.7 Calculations & Calculation Books

3.10.7.1 Types of Calculations

- Geometry
- Structural
- Quantity
- Designer's Calculations – A structural analysis and design of the bridge and related components. Documentation of the work with hand calculations, computer output and detailed notes. The Design Engineer is responsible for the meaning and applicability of computer generated data.
- Design Check Calculations – A check of: the structural analysis and design of the bridge and related components, plan detail sheets, specifications and special provisions, and project quantities; Document the work with hand calculations, and computer output and detailed notes.

3.10.7.2 Importance of Calculations

Designers are responsible for well-organized, legible, neat design calculations properly assembled in a calculation book. Remember:

YOUR CALCULATION BOOK COULD BECOME AN EXHIBIT IN THE COURTROOM.

Be selective, including only calculations that actually support what the contract plans show. Do not include calculations that led down the wrong path and are not shown on the contract plans. However, calculation sheets voided by a project "redo" should not be discarded/deleted, but stored off-line, until it is certain they are no longer needed.

3.10.7.3 Temporary Storage of Unbound Calculations

Keep calculation sheets in a loose-leaf binder at your desk, or electronically on your computer, until they are bound into a calculation book. Properly identify each binder, and cross-reference if more than one binder is needed for a set of calculations.

3.10.7.4 Calculations Books

For a bridge, the paperwork (usually excluding most correspondence) generated by the final design, and construction stages becomes a "set of calculations", or a Calculation Book. Typically for a bridge, it includes:

(1) Design Calculation Book(s)
- Cover Sheet
- Table of Contents
- Designer's QC Form
- Drafter's QC Checklist
- Bridge Design Standards Assessment Table
- Approved Design Deviations/Exceptions
- Structural calculations
- Quantity calculations
- Copy of checked Engineer's Estimate @ Final Plans
- Final Engineer's Estimate of Probable Construction Schedule
- Construction stage calculations such as falsework calculations, alternate design checks, and design corrections or revisions
- Copies of Project Discussion Memos relevant to the calculations

(2) Check Calculation Book(s)
- Cover Sheet
- Table of Contents
- Checker's QC Form
- "Line-by-Line" check calculations
- "Independent" calculations
- Quantity calculations

In the above lists, if it does not say "copy", it means use the original.

Calculations for bridge load rating are handled differently from design calculations. Load rating calculations have their own calculation book and number. For details, refer to the ODOT LRFR Manual.

3.10.7.5 Calculation Book Cover Sheet

The first sheet of every set of design calculations is a completed Calculation Book Cover Sheet. If a set of calculations needs more than one book, put a Calculation Book Cover Sheet in each book with cross-references to the other books used for the same set.

For bridges, the design standards will normally be the AASHTO *LRFD Bridge Design Specifications,* modified or supplemented by:
- AASHTO *Interim Specifications*.
- ODOT *Bridge Design & Detailing Manual*.

3.10.7.6 Table of Contents

Keep the following guidelines in mind:

- If a set of calculations is divided among two or more books, each book should have a copy of the table of contents for the entire set, not just that portion of the set in that book.
- Take time to tie books together by careful cross-referencing.

3.10.7.7 Calculation Sheets

Pads of Standard Bridge Section calculation sheets are available.

Whether using hardcopy sheets or electronic sheets, fill out all headings completely for each sheet used. You may want to number the sheets of a set with its own sequence of numbers while working on an assignment, but you will need to renumber with page numbers in the upper right corners when the set is bound into a calculation book.

To make your calculations understandable to someone else (and yourself later):

- Put them in logical order.
- Show design assumptions
- Show formulas complete with references.
- Reference the source of any numbers taken from other calculations.
- Reference Design Deviations

3.10.7.8 Other Calculation Material

Make sure other material such as computer output, diagrams on graph paper, or completed forms also have the same identifying information as the calculation sheets. Whenever possible, avoid oversize fold out sheets. They can be reduced to book size on a copying machine. The exceptions might be moment and shear diagrams.

3.10.7.9 Calculation Book Numbers

Each calculation book has its own number.

Calculation book numbers are requested from and assigned by the Bridge Engineering Section. When requesting a calculation book number, fill out the request form at:

ftp://ftp.odot.state.or.us/Bridge/BPPM/Sec_1_Br_Admin/Sources_of_Info/Calc_Bks/Calc_Number_Request_Form.doc

Email request with completed form to: bridge@odot.state.or.us and a number will be emailed in return.

At the time final plans are first distributed for review, the designer will need a calculation book number for the title blocks of the drawings. When the design check is completed, the Checker's calculation book number should also be added to the title blocks. List only the first book number assigned to the Designer or Checker, even though there is more than one book for a structure.

Although you may expect to use more than one book for a bridge or a project with several bridges, do not reserve additional book numbers when requesting the first one. Book numbers for a bridge or project are not required to run consecutively. Request additional book numbers when needed or when preparing your set or sets of calculations for binding.

3.10.7.10 Page Numbering

Each calculation book is limited to about 300 pages, which are numbered consecutively.

Number the pages of each calculation book consecutively. Do not continue numbering from one book to another even though both books have calculations for the same structure. Always begin a book with "page 1".

3.10.8 Bridge Load Rating

At the completion of the design of the bridge complete the bridge load rating. See the ODOT LRFR Manual for guidance.

3.10.9 Operations and Maintenance Manuals

Bridge engineering has been changing and numerous emerging technologies are on the horizons that enable facility owners to improve the performance and/or to monitor the safety of their bridges. To ensure these innovations are properly applied and monitored for their effectiveness, the owner is requiring Operations and Maintenance manuals to be submitted along with the design calculations for all unconventional, complex or unusual systems or details. The specifics of the service manuals will be determined at the beginning of design of which they relate to the bridge type design selected.

The intent of this provision is to provide additional information to the agency for the efficient and effective operation of any innovations that are installed and specific to a facility. The manual may include shop drawings, fabrication details and manufacturer's technical product information. The manual should be clear in providing instructions on how and when to inspect and maintain the systems or details and how often to perform condition assessment of the unit.

Examples of deliverables:

1) NDT/E Monitoring Systems:
   a) Example of deliverable: Operations and Maintenance Manual for all the NDT/E monitoring systems for recording fracture critical stresses and potential fatigue crack locations
2) Electrical and Mechanical Systems on Movable Bridges
   a) Operations and Maintenance Service Manuals for the all electrical controls on movable bridges. Maintenance manual should include servicing the machine components and gears, brake systems, drive motors and span locks.
   b) Operating instructions should include electrical service disconnect, wiring and labeling of electrical power distributions, traffic control systems, span lift control and lock systems, navigational and channel lightings, HVAC, fire and security alarms, and remote camera and sensing systems.
3) Seismic Monitoring Systems:
   a) Operations and Maintenance Manual for seismic monitoring system for recording ground motions.
   b) Operating instructions should include system inspection and checks, recorder working properly, troubleshooting, and accelerometers working condition.
4) Cathodic Protection Systems:
   a) Operations and Maintenance Manual for all cathodic protection system to include such components like cabinets, wiring system, reference cells, anodes, and terminal plates.
   b) Operating instructions should include system and inspection checks, battery power operated checks, trouble shooting, presence of corrosion, and sensors integrity check.
5) Bridge design types that are unique or unconventional to the Oregon:
   a) Segmental and cable stayed bridges – inspection and maintenance manuals for its critical details and main force carrying components. Such examples include post-tensioning ducts and tendons, stay cables, anchorage and cradle details, deviators, pot bearings, modular joints, seismic

isolation and/or damping devices, wind shear locks. Maintenance instructions should include the inspection and replacement of its components when they are no longer performing as designed.

b) Suspension bridges – inspection and maintenance manual for its critical details and main force carrying components. Such examples include main cable, saddles, anchorages, shoes, suspender ropes, corrosion protection systems, seismic isolation and/or damping devices, and wind shear locks.

3.11 PS&E TO AWARD

Outline:

3.11.1 Introduction

3.11.2 Changes to Bridge Deliverables after PS&E

3.11.3 Bridge Design Project Close-Out

3.11.4 Request For Information (RFI)

3.11.5 Addenda Letters

3.11.1 Introduction

See PDLT Operational Notice PD-07.

See PDLT Operational Notice PD-08.

[Under development]

3.11.2 Changes to Bridge Deliverables after PS&E

Avoid drawing and estimate revisions after the Bridge Designer has signed the Final Plans. The Office of Project Letting needs a minimum of 24 calendar days prior to the advertising date for final preparation, review, and printing of the contract documents.

The Bridge Designer is responsible to see that these late changes are made and carefully documented. If a drawing is added to the Bridge Final Plans after a project is advertised, the Roadway Designer must be notified so that the drawing number can be added to the title sheet of the contract plans.

Although every attempt should be made to wait until after the contract is awarded, essential changes to the plans and special provisions, that would significantly affect the contract cost or character of the work, can be made during the advertisement period, by an Addendum Letter, up to 10 days before the bid opening, or letting, date. However, an Addendum Letter is expensive and causes additional stress for the Specifications Unit at a time when the pressure is great to get the job completed on time.

3.11.3 Bridge Design Project Close-Out

When the project contract is awarded, the Bridge Designer submits the following:

- Structure Cost Data
- Seismic Design/Retrofit Data Sheet located at:
  http://www.oregon.gov/ODOT/HWY/BRIDGE/standards_manuals.shtml

3.11.4 Request for Information (RFI)

[Under development]

3.11.5 Addenda Letters

[Under development]

3.12 CONSTRUCTION SUPPORT

Outline:

3.12.1 Introduction

3.12.2 Communications during Construction

3.12.3 Shop Drawing Review

3.12.4 Temporary Works Review

3.12.5 Construction Support Close-Out

3.12.1 Introduction

[Reserved for future use]

3.12.2 Communications during Construction

In the Preliminary and Final Design phases, except during the contract advertising period, the Bridge Designer may answer inquiries from outside ODOT about non-controversial projects. Politically or environmentally sensitive projects are another matter. Refer questions about them, especially those from the press or public, to the Bridge Engineer, or the Project Team Leader.

However, from the advertisement date until the project is awarded, the Construction Project Manager has sole responsibility for answering questions about the project. This insures equitable treatment of prospective bidders and avoids conflicting information about plans, specifications, and bid items. Therefore, avoid conversations with prospective bidders during this period and refer them to the Construction Project Manager listed in the front of the project special provisions.

3.12.3 Shop Drawing Review

[Reserved for future use]

3.12.4 Temporary Works Review

[Reserved for future use]

3.12.5 Construction Support Close-Out

3.12.5.1 As-Constructed Drawings

[Reserved for future use]

3.12.5.2 Final Calculation Book(s)

[Reserved for future use]

3.12.5.3 Final Reports & Records

For Local Agency projects, to ensure that the requirements of the National Bridge Inspection Standards (NBIS) are followed under Title 23, submit an electronic pdf file of the following reports and records as part of the Construction Support Close-Out documentation:

- Pile Records
- Final Foundations Report with documentation of changes made during construction.
- Final Hydraulics Report with documentation of changes made during construction.

3.13 (RESERVED)

3.14 COORDINATION WITH OTHER PROJECT TEAM MEMBERS [1.1.2.9]

Outline:

3.14.1 General

3.14.2 Project Management

3.14.3 Survey and Mapping, & Right of Way

3.14.4 Roadway

3.14.5 Traffic and Mobility

3.14.6 Foundations and Geotechnical

3.14.7 Hydraulics and Scour

3.14.8 Environmental

3.14.9 Storm Water

3.14.10 Utilities

3.14.11 Railroad

3.14.12 Public Involvement

3.14.1 General

Regarding permitting, in the situation of an interstate river crossing into Washington or Idaho, ODOT may need to apply for permits required by the other state if ODOT is the contracting agency.

3.14.2 Project Management

From a Project Leader's or Project Manager's viewpoint, the expectation of the bridge designer is to provide a high quality design per scope, on-time and on-budget. Keep your Project Manager informed of both positive and negative impacts to these items! No surprises!

Items to coordinate with your Project Leader or Project Manager:

- Scope / Scope creep
- Schedule
- Budget
- Overall project Quality Plan, and Bridge Quality Plan
- Local, and other non-environmental permits
- Bridge deliverables

3.14.2.1 Local & General Permits

Local and general permits may be required for a variety of subjects to complete the construction of a bridge or elements of a bridge. Some typical local and general permits that may need input from the Bridge Designer:

- Land Use
- Access Permit
- Conditional Use Permit (CUP)
- Riparian setbacks
- Floodplain
- Tree ordinances
- Willamette Greenway (along Willamette River)
- Noise variance
- Underground Storage Tank (UST)
- Canal, diking, and irrigation districts
- US Coast Guard Permit (for navigable waters)

Discuss permit needs (as they relate to the bridge) with the Project Leader/Manager. Provide needed information to the Project Leader/Manager to meet the permitting schedule for the project. Providing this information late will delay the process to apply for and obtain necessary permits, and ultimately delay the letting date of the project.

3.14.3 Survey and Mapping, & Right Of Way

3.14.3.1 Survey and Mapping

Obtain survey and mapping data. Visit the project site with survey data and mapping in hand to 1) get an "on the ground" feel for the lay of the land, and 2) visually check the survey and mapping data for any discrepancies. Identify or confirm site constraints known at this time (see *Section 3.18.1*).

3.14.3.2 Right Of Way

This provision is only applicable to new bridges and the widening of an existing bridge.

Proposed and existing right-of-way limits and any construction easements should be included with the vicinity map information. Ask yourself: Can the bridge and the contractor's operations (work bridge, shoring, falsework, future inspection and maintenance staging areas, the potential need for a detour structure, etc.) be accommodated within these limits, as well as safely ingressing and egressing to and from the highway system by agency personnel?

In order to assure the bridge inspectors and bridge maintenance personnel have a safe place to park vehicles and stage maintenance operations, behind the approach guardrail, the Bridge Designer should work with the Roadway Designer to identify the appropriate space. If the bridge is located over another roadway, additional parking/staging space should also be considered behind the undercrossing route railing. In order to provide a safe ingress and egress from the highway system, the Bridge Designer is encouraged to locate these areas behind the trailing end guardrail.

For the bridge project that has very minor roadwork, verify that steps to acquire necessary right-of-way have been initiated.

For questions about right-of-way data, contact the project's Roadway Designer, who is in touch with the Right-of-Way Engineering Group and Right-of-Way Services personnel.

3.14.4 Roadway

3.14.4.1 Project Geometry

Review the project geometry with the Roadway Designer to verify that you have the latest alignment, roadway cross-sections, and grades. Some questions to consider:

- Do grades, superelevations, etc., provide enough vertical clearances for the type of bridge anticipated?
- Is the choice of bridge width and horizontal and vertical alignment consistent with traffic volume and type of highway?
- Bridges that are more susceptible to roadway surface icing and have superelevation rates in excess of 0.08 ft/ft are considered hazardous under those conditions. Use greater rates only if special study has determined that the greater rate is desirable.

3.14.4.2 Roadway Clearances

Clearances required for highway overcrossings are shown in *Figures 3.14.4.2A, A-1, B and C*.

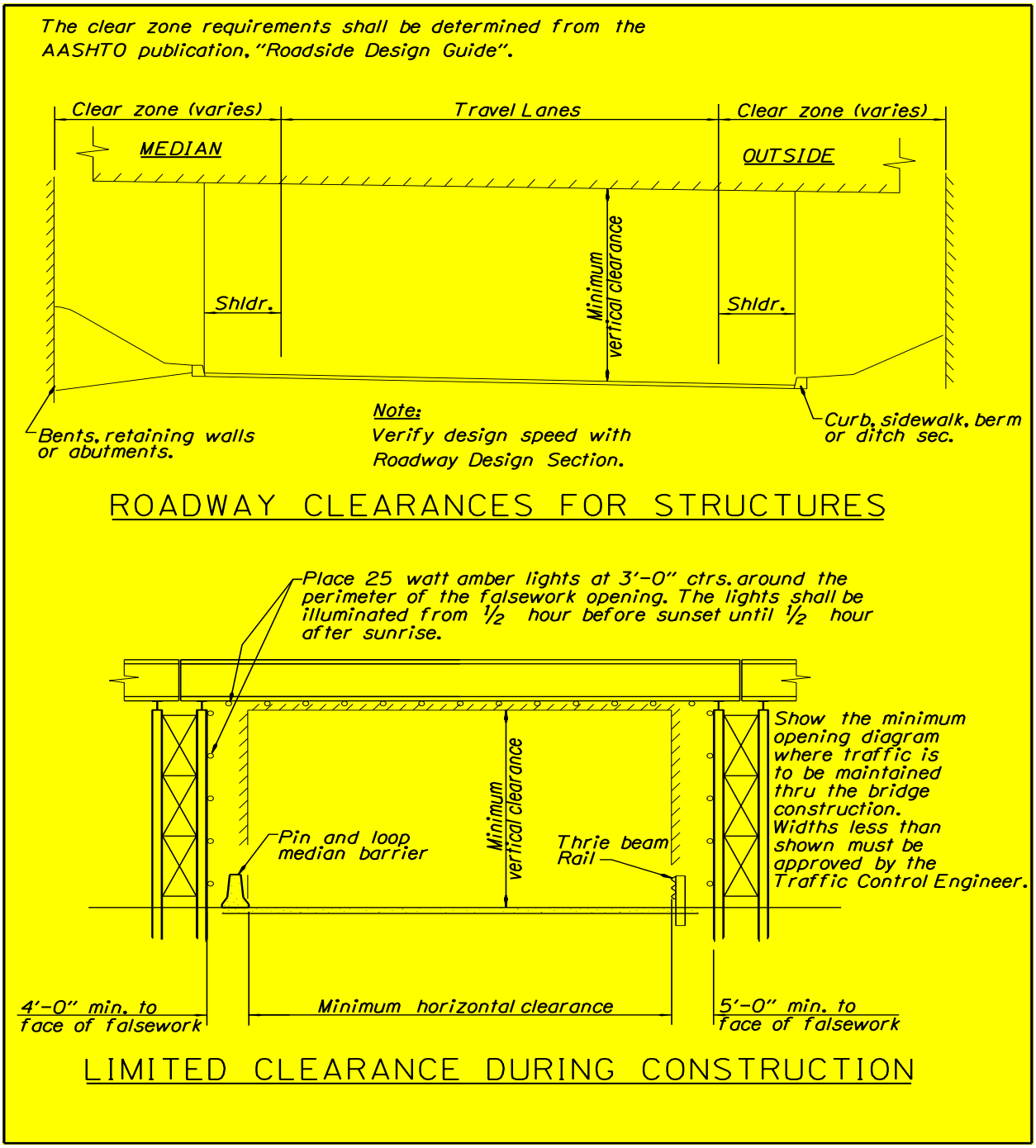

Note: Use 18'-0" min. horizontal clearance for 1 lane (19'-0" for interstate).

Figure 3.14.4.2A

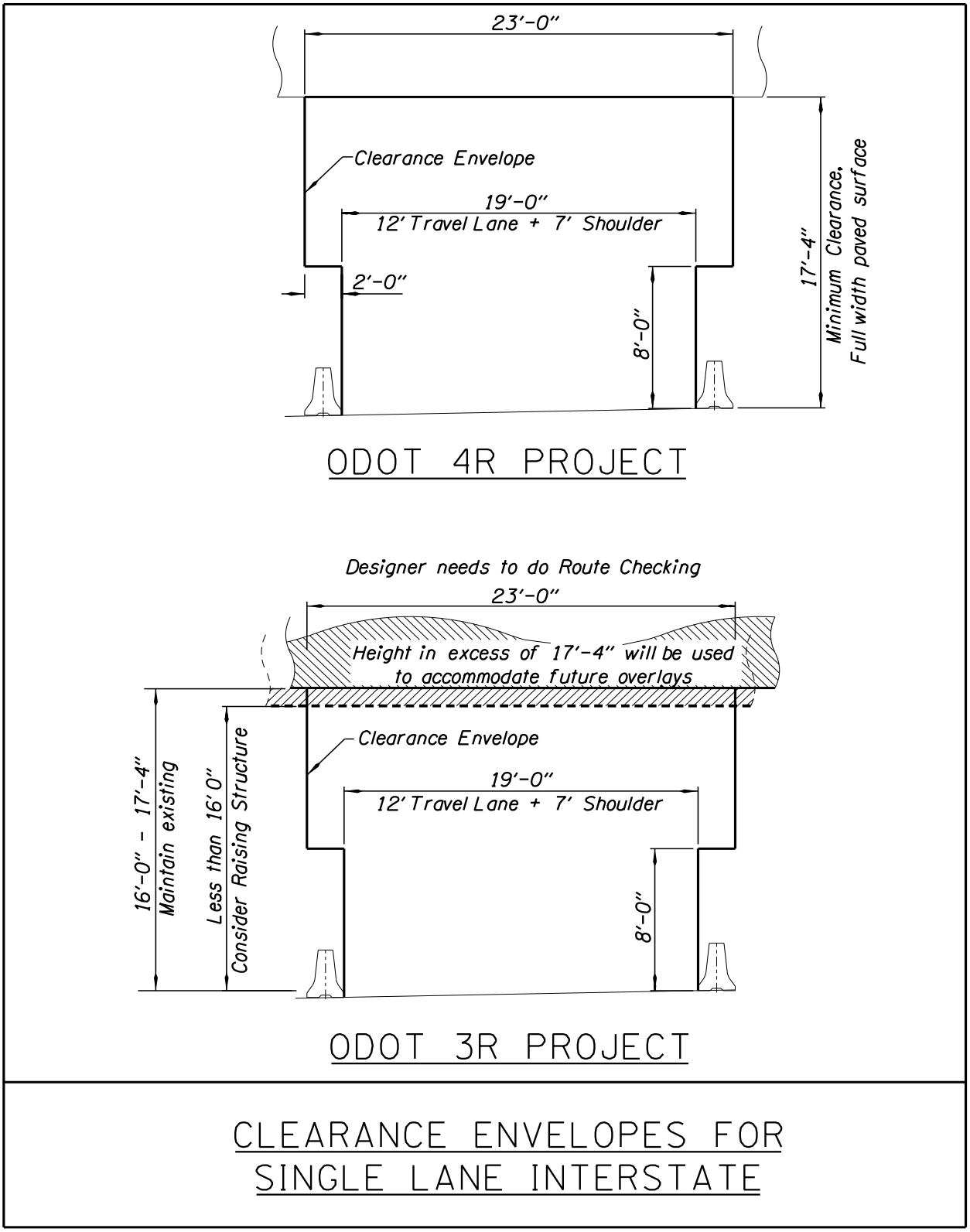

Figure 3.14.4.2A-1

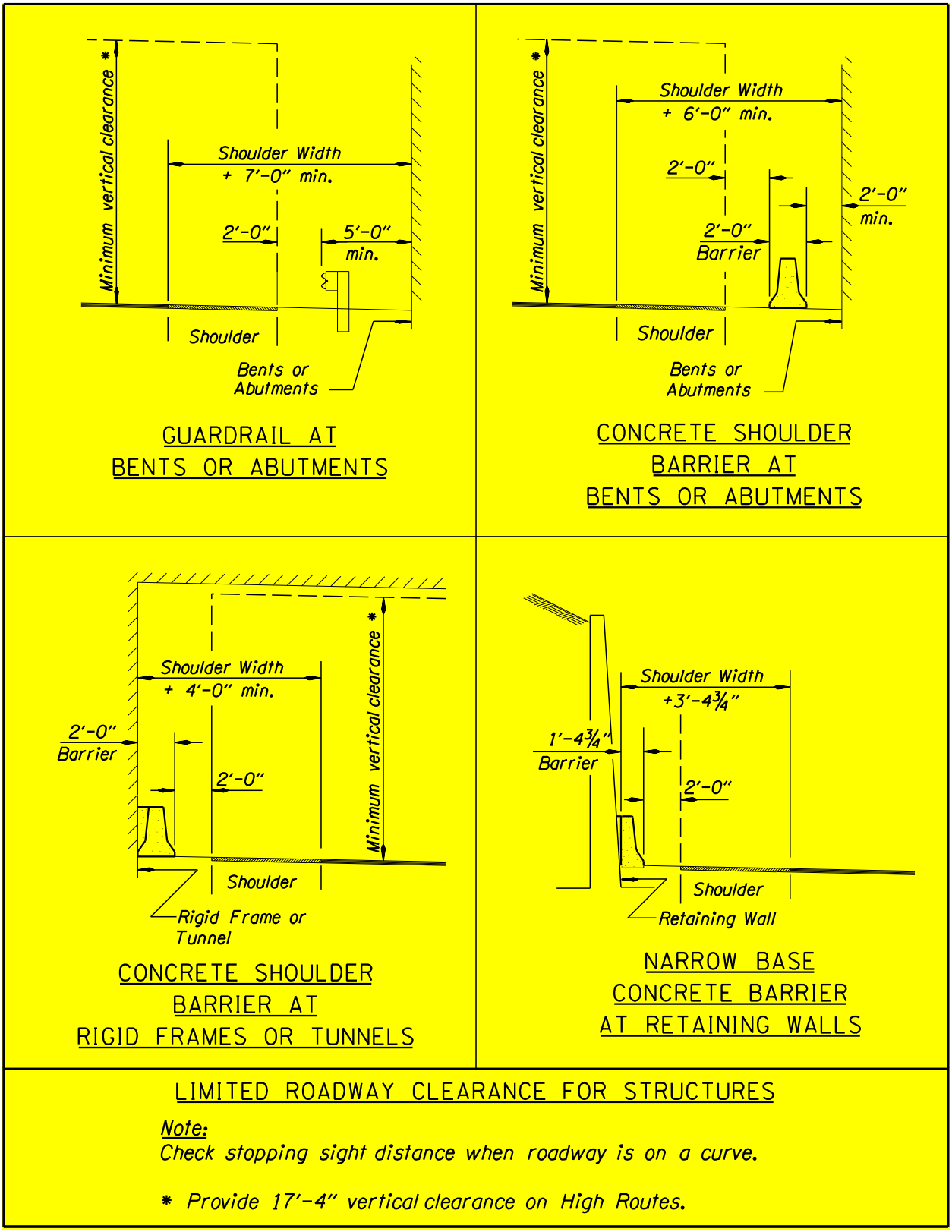

Figure 3.14.4.2B

LIMITED ROADWAY CLEARANCES FOR EXISTING STRUCTURES

Concrete barrier used to protect existing bridge columns with limited clearances shall conform to the following criteria:

CASE 1 - Design shoulder width is not encroached on by placement of concrete barrier.

Place concrete barrier as detailed below:

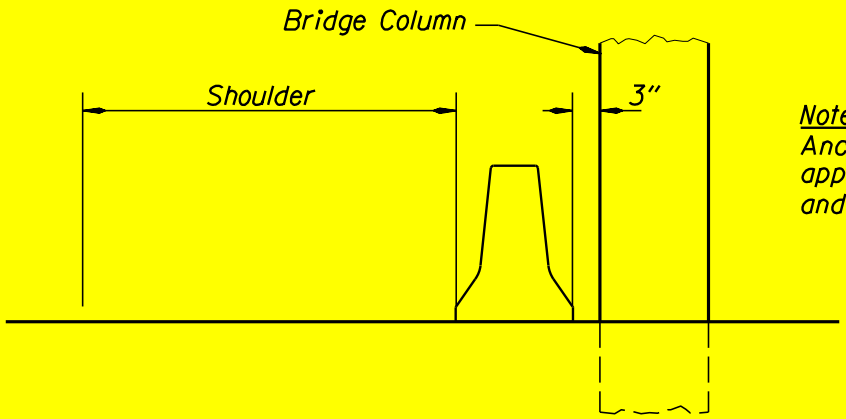

Note:
Anchor first two barrier sections approaching bridge columns and barrier thoughout columns.

CASE 2 - Design shoulder width is encroached on by placement of concrete barrier.

Develop the best solution to protect the bridge column(s). Possible solutions include accepting a narrower shoulder width or using a flat back or a modified barrier design.

Figure 3.14.4.2C

(1) Roadway Widths

Coordinate the roadway width with the Roadway Designer at the beginning of the Preliminary Design Phase.

In most cases, the bridge roadway width will be 4 feet wider than the approach roadway width.

Normal Bridge Roadway Width = Lanes + Shoulders + 4'

This applies to all classes of roads regardless of the ADT and type of traffic. The major exception to this is the one-way single-lane ramp (26' roadway).

Increase shoulder widths by 2 feet where roadside barriers are used. The 2 foot shy distance is normally

not required adjacent to a raised sidewalk that has a traffic rail at the back of the sidewalk.

For local agency projects on the NHS system, the roadway width should be verified using AASHTO Publication, "A Policy of Geometric Design of Highways and Streets".

(2) Sidewalk and Bikeway Widths

The width of sidewalks on State projects should be:

Designated separate bikeways on bridges	8' minimum
Urban areas	6' to 8'
Rural areas	5'

Sidewalk ramps are required at all intersections and other crosswalks for disabled persons. Use the details on "Sidewalk Ramps", *Drawing RD725*.

(3) Height of Curbs and Sidewalks

Use 7 inch height when the rail used at the back of the sidewalk is structurally adequate and has been crash-tested. Use 9 inch height for all other cases.

(4) Vertical Clearance

Vertical clearance policy is established by the Roadway Engineering Section and is listed in *Section 5.7* of the Highway Design Manual. However, the current requirements of this section are superseded by the Vertical Clearance Standards Technical Bulletin (TSB08-03(B)). The requirements of this Tech Bulletin have been developed in conjunction with development of a new concept for the Oregon Highway System: High Routes. High Routes are highway segments that are the most important when high loads are moved.

Review and comply with the Oregon Vertical Clearance Standards Map and High Routes Highways Table during development of the TS&L (and DAP). Additionally, before finalizing the clearance of the bridge, consult with the Pavement Designer to determine if an additional allowance is required for future pavement preservation treatments. If the bridge project consists of 3R preservation work and a decrease in the vertical clearance below the level of the minimum vertical clearance is proposed, ensure that the Roadway Designer has consulted with the Permit Program Coordinator for the Motor Carrier Transportation Division (MCTD), and a Design Exception Request has been submitted. The Permit Program Coordinator for MCTD will need to collaborate with industry and with the Mobility Steering Committee before providing a written response to the project development team. Follow the same process when proposing a reduction to the vertical clearance requirements for a new bridge. No reduction of the vertical clearance on existing bridges, or a reduction in the standard for a replacement bridge will be allowed without written approval from the Motor Carrier Transportation Division (MCTD). Include a copy of the approved Design Exception for a non-standard vertical clearance in the calculation book.

All new bridges where no vertical clearance limitations currently exist require consultation with MCTD to ensure that ODOT understands the impact of the proposed decrease to the user.

Vertical Clearance Design Standards:

Minimum Vertical Clearances are actual measured heights, representing the shortest allowable distance between the lowest point on the underside of a bridge and the surface of the pavement for the entire width of the roadway, including shoulder area. Minimum Vertical Clearances include a 4 inch buffer, but do not take into account additional height for any future pavement overlay thickness.

New Construction Projects – Minimum Vertical Clearances:

High Routes	17’ - 4”
NHS (not on High Routes)	17’ - 0”
non-NHS (not on High Routes)	16’ - 0”

Other Projects

- No reduction in existing vertical height clearance below the Minimum Vertical Clearances
- No reduction in vertical clearance if existing vertical height clearance is below the Minimum Vertical Clearance

Legal Load Height

The maximum height for legal loads is 14 feet.

(5) Clearances during Construction

Horizontal and Vertical Design Policy for clearance during construction has been established by the Traffic-Roadway Engineering Section. Coordinate with the Traffic Control Plans Engineer for minimum clearances applicable on the project. If the clearances required cannot be maintained during construction consult with the Traffic Control Plans Engineer for concurrence and notify MCTD.

Horizontal Clearance:

Freeway Mainline (Not within a Crossover):

One Lane	19’ – 0” (16’ – 0” if over-dimensional loads and annual permits are detoured)
Two Lanes	28’ – 0” (28’ – 0” if over-dimensional loads and annual permits are detoured)

Freeway Crossover:

One Lane	19’ – 0” (16’ – 0” if over-dimensional loads and annual permits are detoured)
Two Lanes	32’ – 0” (28’ – 0” if over-dimensional loads and annual permits are detoured)

Non-Freeway Roadways (Freight Route)

One Lane	19’ – 0” (14’ – 0” if over-dimensional loads and annual permits are detoured)
Two Lanes	28’ – 0” (28’ – 0” if over-dimensional loads and annual permits are detoured)

Vertical Clearance:

For locations with an existing clearance 17’-0” or greater, provide 17’-0” minimum vertical clearance. For locations with an existing clearance less than 17’-0”, no reduction in clearance will be allowed during construction. Always notify the MCTD if reduction of the existing vertical clearance is planned for the construction season.

3.14.4.3 Bikeways

Oregon law requires that reasonable amounts of highway funds be spent for bicycle and pedestrian facilities. That means: consider bikeway staging needs wherever highways, roads, or streets are being constructed, reconstructed, or relocated.

"Bikeway" is a general term meaning any road or path open to bicycle travel regardless of whether it is designated for bicycles or to be shared with pedestrians or automobiles. Specific types of bikeways are:

- Bikes lanes or bike paths
- Shared roadways
- Shoulder bikeways
- Sidewalk bikeways

To work with bikeways, you are going to need:

- *Oregon Bicycle Plan*
- AASHTO *Guide for the Development of Bicycle Facilities*

3.14.5 Traffic and Mobility

3.14.5.1 Traffic Handling and Data

Used here, traffic includes:

- Vehicles
- Bicycles
- Pedestrians (including the disabled)

There are four traditional methods of handling traffic when replacing a bridge:

- Close the highway while removing and rebuilding the bridge
- Construct a temporary detour around existing bridge and replace the bridge on the existing alignment
- Use the existing roadway and bridge while constructing a parallel bridge on new alignment
- Use stage construction with one or more existing or new lanes carrying traffic while other portions of the existing bridge are being removed and rebuilt

Often the last method is recommended over the second and third methods. However, without proper investigation stage construction may:

- Cause a high number of complaints from the traveling public
- Mean greater danger for ODOT and contractor personnel as well as to the public
- Result in construction difficulties and longer construction time
- Adversely affect the quality of the finished product

Consider the various methods of handling traffic:

- Is the method proposed by the field the most reasonable way to build a project
- Are there alternate and possibly more satisfactory solutions

When site constraints do not allow the use of traditional methods, Accelerated Bridge Construction (ABC) methods may be warranted. See *Section 3.24*, "Accelerated Bridge Construction Guidelines".

3.14.6 Foundations and Geotechnical

See *Section 1.10*, "Foundation Considerations".

3.14.7 Hydraulics and Scour

3.14.7.1 Hydraulics, General

The Hydraulics Designer will provide data and recommendations with respect to footing elevations, and scour protection which are to be used at each bridge site. The Bridge Designer should be satisfied that the recommendations are adequate with respect to scour and economy. If needed, discuss questions on this matter with the Hydraulic Designer. Special factors in the type of construction selected may cause a reconsideration of the original recommendation. Some basic guidelines include:

- The Bridge Designer, Geotechnical Designer, and the Hydraulic Designer shall evaluate the preliminary layout of the bridge and approach embankments for the possibility/likelihood of washout conditions. Washout conditions are those where the abutment columns are exposed and may lose lateral and vertical support to the foundation system. This can happen in crossings with wide floodplains and erodible soils, highly erodible flood plains, braided channels, channels located in alluvial fans, channels with significant lateral migration of the thalweg, etc. One of the more significant issues with this situation is whether or not the unbalanced lateral loads on the structural system will cause failure. Therefore, the abutment columns should be designed to withstand this unbalanced loading situation and resultant structural failure of the bridge.

  As an example, while riprap abutment protection can be appropriately designed, if the floodplain upstream of the crossing is located in in a highly erodible non-cohesive soils (e.g., an alluvial fan), the flow could migrate and cut a new channel toward the approach roadway embankment. In a location such as this it is unlikely that sufficient riprap could be placed deep enough and extensive enough to protect the approach embankment. In this type of situation, the structure should be designed not to fail should one of the abutments be washed out.

- Riprap at bridge ends or on embankment slopes is considered a roadwork item. Layouts and typical sections of riprap details such as thickness, filter blanket, and toe trench are to be shown on the roadway plans (see *Figure 3.14.7.1*). For the bridge plans, show riprap at bridge ends to scale, but without dimensions and with a note: "See Roadway Plans for riprap details." For bents and footings in streams and not at bridge ends, show riprap details. (See *Section 1.10.3*, "Underwater Construction.")

- If the Hydraulic report is not available, note in TS&L Narrative or Memo and on plan sheets that it is not available.

- Except in solid rock, make the bottom of all footings in streambeds a minimum of 6 feet below the normal streambed. For footings with seals, the top of the seal is considered the bottom of the footing.

RIPRAP CLASS	T	Filter Blanket
50	12"	none
100	18"	none
200	24"	6"
700	36"	9"
2000	48"	12"

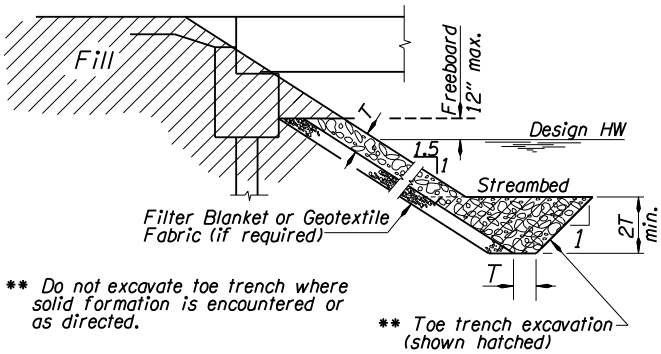

RIPRAP BLANKET AND TOE TRENCH DETAIL

Figure 3.14.7.1

3.14.7.2 Waterway Openings and Hydraulic Requirements for Stream Crossings

Refer to the Hydraulics Report for design recommendations. If it is not available yet, consult with the Hydraulic Designer for preliminary guidance and any field data.

With respect to design floods and analysis, the standard Design Flood for bridges on Interstate Highways is 50-year and for other highways is 50-year or 25-year depending on their traffic volume. Designated FEMA floodway projects are designed for 100-year floods; contact the Hydraulics Unit for comments or requirements if any structures, walls, or fills encroach on a floodway area.

The waterway opening under a bridge must be capable of passing the Design Flood with clearance to Design High Water elevation according to the following:

- Width of waterway opening is measured normal to stream flow. The waterway area is the normal channel area below the Design Flood High Water elevation. Minor channel cleanup and modification is acceptable, but major lowering of the streambed under the bridge to increase the opening is not only ineffective but unacceptable.

- The Hydraulics Report will recommend the minimum bottom-of-beam elevation. Normally, a minimum bottom-of-beam clearance of 1 foot is provided above the design flood elevation. The exception would be for county and city bridges whose approaches are overtopped more frequently than once every 10 years. The minimum bottom-of-beam elevation provided for these situations is 1 foot above the 10-year design flood elevation. Large amounts of drift or ice flows may require more clearance. If practical, 1 foot of clearance above the 100-year elevation is provided.

- Under rare circumstances, such as a park settings or where other controls on grade lines make it necessary, high water above bottom of beam, or over the deck, may be allowed.

- Ordinarily, the design flood should not overtop the adjacent roadway. When the roadway over topping flood is less than the design flood, the overtopping flood becomes the design flood.

If there are no future plans to raise a roadway to eliminate overtopping, a combination of bridge waterway opening and overtopping at the low points of adjacent roadway may be an acceptable alternate to accommodating the entire stream flow under the bridge. For Interstate Highways, the minimum overtopping frequency is 50 years.

Roadway overtopping at lesser recurrence intervals than the 50/25 years is acceptable and allowable in certain circumstances such as:

- Other roads in the area are overtopped
- Traffic counts are low
- Alternate routes are available
- Road is useable when overtopped (shallow overtopping)
- The required bridge would be excessively long or high and a review is made of the effect of backwater and overflow on adjacent properties and facilities

3.14.7.3 Bridge Scour Design

(1) Scour Evaluation and Design

The Hydraulics Report will present the results of the scour analysis. The scour analysis shall include analysis on possible long term changes in the channel bottom elevation due to either aggradation or degradation, possible shifts in channel alignment, contraction scour and local pier scour. Abutment scour and the potential for “washout” conditions are also evaluated. Scour depths are calculated for both the

100-year (design/base flood) and 500-year (check flood) events. However, if the incipient roadway-overtopping flood can occur, it is usually the worst case for scour because it will usually create the worst scour conditions at the bridge site (greatest flow contraction and highest stream velocity). Therefore, scour depths are calculated depending on the recurrence interval for the overtopping flood. See *Chapter 10* of the ODOT Hydraulics Manual for a description of these specific conditions and criteria. The Hydraulics Report will provide the scour elevations for each of these conditions.

(2) Scour at Bridge Abutments:

In addition to scour caused by contraction, channel degradation and local pier scour, the potential for scour at the bridge abutments must be considered at all waterway crossings. Abutment scour, lateral stream migration (channel changes) or overtopping of the approach embankment could all result in partial or complete removal of approach fill material and severely destabilize the abutment foundation and the bridge. A "washout" condition could occur under any of these conditions where the approach embankment supporting the abutment foundation is completely scoured out. Each of these three conditions should be evaluated as described below:

- Abutment Scour: ODOT policy states that abutment scour calculations are not required if abutment and approach fill slopes in the waterway are protected with a properly designed revetment protection system, such as a riprap blanket with a toe trench extending down to the maximum scour elevation. Revetment methods are discussed in the ODOT Hydraulics Manual, *Chapter 10*, and in the FHWA Highway Engineering Circular No. 18 (*HEC-18*). The revetment protection must be capable of withstanding the velocities and flow associated with the check flood event. With this level of protection, the scour prism is reduced to just the contraction scour, scour from degradation and local pier scour (if applicable) for use in scour design of the bridge.

  For abutments and bridge fill slopes in contact with stream flow or wave action and not protected with permanent revetment measures, abutment scour is calculated (if hydraulic and site conditions are appropriate). Abutment scour could lead to destabilization of the bridge end slope and loss of embankment material supporting the bridge foundation and abutment. If this condition is possible, then the potential for a full washout condition should be considered for both the 100 and 500 year flood events.

- Roadway Overtopping: Overtopping of the approach fill near the bridge end may also result in a washout condition (ref. *HEC-18, Section 7.6* and *AASHTO Section 2.6.4.5*). This condition should be considered in cases where the overtopping is located in the proximity of the bridge end and a breeched embankment could result in the scour and removal of fill material supporting the bridge abutment foundation. Properly designed slope protection and revetment may provide sufficient mitigation against the potential for a washout condition depending upon site conditions. However, each overtopping case is unique and should be carefully evaluated for the potential of a "washout" condition. If a "washout" condition is considered feasible, the amount of embankment material that could be removed, and the scour depths, are to be determined by the Hydraulic Designer.

- Lateral Stream Migration: The potential for lateral streambed migration (channel changes) should be evaluated for possible detrimental effects leading to erosion or scour of the bridge approach fills. For unprotected, or even well protected, abutment slopes, if there is a possibility that the stream channel could shift towards the abutment such that the revetment might not be relied upon for permanent protection, then the condition of a full or partial washout of the abutment fill material should be assessed. The potential and likelihood for stream channel migration and the resulting affects, is determined by the Hydraulic Designer who should also determine whether protective measures such as channel guides, stream bank stabilization techniques or other measures could be employed to mitigate this potential. The hydraulic design and any stream bank stabilization measures must demonstrate that the channel won't migrate towards the abutment such that it could cause a destabilization of the slope and a potential "washout" design condition.

Under a washout condition, all foundation support (vertical and lateral) provided by the embankment

material beneath the abutment should be neglected down to the scour elevation associated with both the Design Flood (base flood) and Check Flood events (excluding local pier scour). The foundation should be capable of supporting the bridge loads under both of these design conditions as described in the AASHTO LRFD Bridge Design Specifications.

Abutment scour conditions which could result in partial or complete washout of the material supporting the abutment foundations may occur at one or both of the bridge abutments depending on the site conditions. For sites with potential washout conditions, the bridge should be investigated for the washout condition that would produce the worst case unbalanced loading in the bridge, provided that case is feasible. This is often the case for strutted abutments where the passive resistance of the abutment backfill material is crucial to the stability of the bridge and a washout condition behind only one abutment could lead to unbalanced loads and failure of the bridge.

For washout conditions at abutments supported on deep foundations, debris loads on the end bent piles or shafts are not included in this analysis.

(3) Scour Design

For scour depths associated with the Design Flood, (typ. 100-year flood or overtopping flood if it is more frequent), the bridge design should be checked at both the Service and Strength Limit States (per *AASHTO Article 3.7.5*). For scour depths associated with the Check Flood, (500-year flood or overtopping flood if it controls), the bridge should provide adequate foundation resistance to support the unfactored Strength Limit State loads (per *AASHTO Article 10.5.5.3.2*).

Only the scour due to long term stream bed degradation is included in the seismic design of the bridge (Extreme Event Limit State I).

3.14.8 Environmental

Avoid, Minimize, Mitigate…

3.14.8.1 Environmental Performance Standards & Permits

See PDLT Operational Notice PD-04 and the technical guidance document under References at the end of the Notice.

Environmental Performance Standards are considered during Project Scoping to help avoid unanticipated project costs from permit requirements and to ensure enhancement options are considered and, where appropriate, included in the project budget.

Environmental Performance Standards determined to be applicable during Scoping are reevaluated at Project Initiation. During the Project Kickoff Meeting, design constraints and required permits should be identified.

Some environmental rules, regulations, permits and other topics that may be applicable on projects with bridges that may need discussion with the Environmental Specialist, or input from the Bridge Designer:

- National Environmental Policy Act (NEPA) (Requires that any activity or project receiving federal funding or other federal approvals undergo an analysis of potential impacts to the environment.)
- In-Water Work Windows (Permissible time to work inside the Regulated Work Area.)
- Archaeological, Historic and Cultural Resources (Identify areas to avoid.)
- SHPO Section 106, National Historic Preservation Act
- Section 4f – US Dept of Transportation Act of 1966 (Protects three basic types of resources: publicly owned parks and recreation areas, publicly owned wildlife and waterfowl refuges, and historic sites.)
- Section 6f of the Land and Water Conservation Act (Prevents property from being converted from outdoor recreation to any other use.)
- Visual effects (looking away from the bridge, or looking at the bridge from afar)
- Hazardous Materials (Disposal of treated woods, lead paint, and old construction materials containing asbestos.)
- Piling removal
- Rip-rap bent protection (Exclusion can affect type, size and location of the bridge's foundations.)
- Wetlands
- Clean Water Act Sections 401, 402, & 404
- Fluvial (Width of waterway to allow for natural meandering of the stream. Affects the length of the bridge and pier location.)
- ODFW Fish Passage Criteria
- USFW / NMFS Migratory Bird Treaty Act
- USFW / NMFS Endangered Species Act
- Wildlife passage accommodations (May need to provide additional horizontal or vertical clearances for wildlife passage.)
- Joint ACOE / Oregon DSL Removal-Fill Permit
- Access & Staging Areas (Estimate/Identify adequate areas for the contractor to stage work in so it can be environmentally cleared for use.)

Discuss permit needs (as they relate to the bridge) with the Environmental representative on the Project Development Team. Provide needed information to meet the permitting schedule for the project. Providing this information late will delay the process to apply for and obtain necessary permits, and ultimately delay the letting date of the project.

Even if no permit is required, restrictions or comments from the permitting agency may have to be shown on the contract drawings or stated in the special provisions.

3.14.8.1.1 Permit Information Memo

The need to supply the required permit information as soon and as accurately as possible cannot be overemphasized. Some applications take 6 or more months to get approval.

It is not recommended to try to include all the necessary information for all the various permits in the TS&L Report – it can become unwielding, and takes away from the purpose of the TS&L Report. Instead, it is recommended to prepare a separate memo to convey information for use in preparing and applying for the various permits that are needed to complete the project.

TS&L Plan & Elevation drawings and vicinity maps may also be used as a basis for special permit drawings; but they should be stripped of any information not needed to obtain the permit. Keep in mind: the people reviewing the applications are not structural designers. They do not have time to sift through many drawing details and dimensions not relevant to the permit approval.

Topics that may require the Bridge Designer's input include:

- Project timing and chronology.
- Alignment and size of the new bridge in relation to the existing bridge (i.e., number of spans, length).
- Quantity of impervious existing bridge surface removed and added by the new bridge.
- Type of the new deck surface and construction methods.
- Type of the new bridge railing and construction methods.
- Proposed treatment of the runoff (i.e., number of scuppers or direct discharge drains on the old bridge vs. number of drains on the new bridge)
- Number and sizes of the existing bents/footings to be removed within the OHWM and the wetted channel. Discuss the removal methods of the existing bents, footings and piles.
- Number and sizes of bents/footings added for the new bridge, within the OHWM and the wetted channel. Discuss the construction methods for the new footing, bents and piles.
- Type of isolation method used during construction (i.e., cofferdam).
- For bridges with lead based paints, discuss the method of removal and disposal.
- If a detour bridge, working bridge, or falsework are required, discuss how many bents and types of temporary supports that may be within the OHWM and wetted channel. Discuss the construction and removal methods that might be used.
- Extent and duration of in-water work (i.e., heavy machinery in wetted channel).
- Amount or extent of fill or rip-rap.
- Possible staging areas and access.
- Amount and type of vegetation to be removed (outside and within the OHWM).
- Amount of wetland impacted.
- Any planned mitigation.

3.14.8.2 Protection of Recreational/Cultural Resources

Be alert to the effects of construction on:

- Recreational activities, areas, or facilities.
- Cultural resources such as fossils, artifacts, burial grounds, or historical bridges and dwellings.

Refer to *Section 00290*, "Environmental Protection", specifically *Section 00290.50*, "Protection of Cultural Resources", in the *Standard Specifications for Construction.*

Although normally researched and proposed by ODOT's Environmental Section, protection or consideration of these activities or resources can be initially overlooked. Permit requirements from agencies like the U.S. Army Corps of Engineers or Oregon Department of Fish and Wildlife deal with historical, cultural, and recreational concerns too. Here are some examples of challenges from the past:

- Protection of summertime river rafters passing under a contractor's work bridge.
- Removal of large amounts of river debris hung up on cofferdams and endangering a collegiate racing crew practicing downstream.
- Saving of old or rare trees near a city bridge construction site in deference to neighborhood sentiment.

3.14.8.3 Bat Habitat

As there are no regulatory requirements (state or federal) for establishing bat habitat on bridges, use discretion when providing the habitat. Do not provide bat habitat if it compromises the structural integrity of the bridge, interferes with maintenance and inspection activities, or creates a public hazard. Consider off-bridge habitat when applicable.

Use standard details for the design of bat habitats. Only include bat habitat details when requested by Region environmental staff. The bridge types utilized in the standard details are side-by-side precast slabs, side-by-side precast box beams, precast Bulb-T bridges and precast Bulb-I bridges. The type of habitats included in the details are longitudinal slotted habitat in the slab and box beam bridges, transverse slotted habitat in the precast Bulb-T and Bulb-I bridges, and "cave habitat" in precast Bulb-T and Bulb-I bridges.

The selection of cave or slotted bat habitat depends on the species of bats that occupy the area. This can be determined by the Environmental Section.

The slotted habitats are typically 3/4" thick and have varying depths depending on the bridge superstructure elements. For precast slabs and box beams, the slots are formed with 3/8" recesses in each of the two adjoining members. The use of a 3/4" recess in one member only was considered but rejected because of the risk of corrosion. A roughened recess surface is provided by sand blasting or forming.

Slotted habitats used in precast Bulb-T and Bulb-I girders are formed using 3/4" thick precast greystone panels with roughened surfaces. Three panels are used with a clear spacing of 3/4" between each panel. They are placed transversely to the beams and in contact with the bottom of the top beam flanges and the bottom of the deck. This was done to provide thermodynamic contact with the upper concrete. Access slots are provided at the bottom of the panels.

The cave habitats are also detailed for precast Bulb-T and Bulb-I girders. They are formed using precast or cast-in-place vertical walls and precast floor panels. The decision between precast or cast-in-place wall panels can be made by the designer, or left to the contractor. The complexity of fitting up the precast wall panels between the two precast girders may control this decision. In either case, the wall panels will be held in place by steel angles anchored in the precast beams. Provide access holes for the bats in both the floor panels and the end wall panels.

The location and number of habitat elements will be project specific depending on the population of bats in the area.

Locate bat habitat features using the following guidelines:

- Do not place bat habitat directly over a roadway or walkway. Bat guano can be a hazard to bridge inspectors, maintenance staff and the general public. If bat guano is allowed to accumulate and dry on a roadway or walkway, vehicle or pedestrian traffic will cause the guano to become airborne resulting in an increased health hazard.

- For vertical slot bat habitat, such as used with precast slabs and boxes, place slots at least 12 feet away from abutments and interior bents. This requirement provides a guano-free zone for bridge inspection access to bearing locations. In addition, do not place slots within 5 feet of midspan.

- For cave-type habitat, often used with precast girders, do not place habitat within 15 feet of the abutments and interior bents. This requirement provides a guano-free zone for inspection of both bearings and the maximum shear portion of girders. In addition, do not place habitat within 10 feet of midspan.

- For abutment roughening that provides area for roosting, limit roughening to no more than 25 percent of the horizontal abutment face. It is preferable to keep roosting areas limited to the corners (closest to the exterior edges of the abutment).

Where proposed bat habitat details do not meet these guidelines, submit a design deviation.

3.14.9 Storm Water

[Reserved for future use. (If you have deck drainage, you have Storm Water coordination.)]

3.14.10 Utilities

As an early design task, determine if there are:

- Requirements for carrying existing and future utilities on bridges
- Requirements for accommodating utilities in the vicinity of box culverts, sound walls, or retaining walls, especially mechanically stabilized earth (MSE) walls.

3.14.10.1 Roles and Responsibilities

(1) District Roles and Responsibilities

The Districts are the main point of contact for the location of all utilities and will issue all utility permits. (Utility permits are issued by ODOT to the utility companies.) Utility permits allow the installation, relocation, and removal of utilities within the State right-of-way. Utility companies will only be given a permit for the specific area they actually need for that installation. Space for future lines will need to be included on a separate permit application. If the utility installation requires holes to be drilled into the bridge, if the utility will add a significant amount of additional dead load on the bridge, or if the installation has the potential to be in conflict with any of the items in *Section 3.14.10.1-(3)* and *Section 3.14.10.2*, the District will refer the permit application to the Region Tech Center Bridge Lead and the Bridge Designer for their input and approval. Otherwise, the District Manager will simply approve, monitor the installation of the utility, and assure that all utility installations are labeled in accordance with accepted practices (see Section 3.14.10.2).

(2) Region Tech Center Roles and Responsibilities

If the District forwards a copy of a utility permit request to the Region Tech Center for review prior to the issuance of the permit, the Regional Tech Center Bridge Lead and Bridge Designer will assure that the utility installation is in compliance with the items in *Section 3.14.10.1-(3)* and *Section 3.14.10.2*.

For proposed utilities on historic bridges, the application should be reviewed by the Region Cultural Resource Specialist.

(3) Bridge Engineering Section Roles and Responsibilities

The Bridge Engineering Section (Preservation, Operations/Inspection, or Load Rating, as applicable) will provide input if the utility installation will have a direct impact on any of the following:

- The installation is on a bridge that has a cathodic protection system in place, or is within a Marine/Coastal Environment as defined in *Section 1.26*
- Installation has the potential to create a corrosive environment due to dissimilar materials
- The utility is going to be installed on a drawbridge
- The installation is in a confined space where its location or operation creates an unsafe environment for bridge inspection or bridge maintenance personnel
- The installation calls for the installation of a High-Voltage Line on a bridge
- The utility contains a high-pressure line or volatile gases
- The installation has the potential for adding a significant amount of dead load to the bridge or individual structural components

3.14.10.2 General Requirements

Install wire line type crossings in conduit.

Do not install High-voltage lines (greater than 25000 volts) on bridges.

Use existing utility provisions located on the bridge, when possible.

Design utility installations so that a failure will not result in damage to the bridge or be a hazard to traffic or endanger the public.

Locate the utility installation to minimize the effect on the appearance of the bridge and minimize installation, inspection, and maintenance access problems. In most cases, this will mean installing the utility between girders or in the sidewalk or rail. Locate the utility as close as possible to the exterior of the bridge to allow access by snooper crane, if no other access is provided. This may not be possible if staging of the bridge is not compatible. See *Section 3.19* for Safety and Accessibility guidance.

Provide sufficient space around utilities for maintenance activities such as cleaning and repainting steel members.

Do not extend utilities and supports below the bottom of the superstructure.

If the utility is placed on the outside of the rail or exterior girder on stream crossings, place it on the downstream side of the bridge to minimize the chance of damage from floating debris.

Utilities are to be labeled according to American Public Works Association (APWA) standards with color code and owner, contact information, etc.:

- Electrical – Red
- Gas – Yellow
- Communication – Orange
- Potable Water – Blue
- Irrigation – Purple
- Sewer - Green

3.14.10.3 Providing for Utility Installations

When allowed by the bridge design, provide for utilities as follows:

- Agency Communication Infrastructure – on new National Highway System bridges, provide a minimum of two – 2 inch I.D. conduits for Highway communications use. Follow the detailing guidelines for utility installation in *Section 3.14.10.4*.
- For bridges carrying a freeway over a river, provide for utilities that have been approved by the FHWA. Provide for future utilities on a judgment basis.
- For bridges carrying highways over freeways and other classes of highways, provide for utilities that have requested space. Provide for future utilities on a judgment basis.

Also see *Section 3.14.10.7* for acceptable accommodation of utilities in bridges.

Provide for future utilities based on the proximity to heavily populated areas and the probability of future requests for utilities.

- For bridges inside city limits, provide for future needs with two 12 inch diameter holes on each side of the bridge in addition to the specific utility requirements.

Provide access for utilities as follows:

- No utilities should be accommodated on bridges unless access can be provided for inspection and maintenance by the utility, with the exception of telephone and electrical conduits continuously encased in concrete.

- Do not provide access from the freeway for bridges carrying highways over freeways. In special cases, access may be provided from freeway right-of-way, but not from the traveled roadway or shoulders.

3.14.10.4 Design and Detailing Guidelines

Utility attachments may exert large forces at the point of connection. Design individual members and the entire bridge for all loads imposed by the utility. Consideration should be given to loads or movements that might be imposed on the utility by the bridge, such as from temperature movements.

Ensure all loads are considered in the design, including dead, temperature, vibration, inertia loads, etc. Use longitudinal and transverse supports or anchorages as needed. Contact the Bridge Engineering Preservation Unit as needed to determine appropriate loads for design or review.

Include calculations for attachment connections or brackets designed by the utility company in the submittal for the designer to review. State maximum design and operating pressures for pressure systems. See *SP 00589* – "Utility Attachments to Structures" for additional requirements.

If the proposed utility weighs more than 100 pounds per linear foot, the utility company will be required to provide a load rating of the bridge, with the utility loading superimposed onto the bridge, so that it can be determined whether the bridge has sufficient loading carrying capacity for the installation of the utility. If available, ODOT will provide a set of bridge plans for their use. All plans must be field verified, because not all As-Constructed bridge plans are accurate.

If a proposed utility installation requires a structural evaluation, the utility plans / calculations must be stamped by an Engineer that is registered in the State of Oregon.

Design the installation so that a failure does not damage the bridge or endanger the public. This includes designing for earthquake movement (some utilities are sensitive to movement, i.e., gas, water, sewer, fiber optic cables).

Submittal should include calculations for:

- Vertical, lateral, and longitudinal loading, as appropriate
- Maximum and operating pressures for pressurized systems
- Waterline thrust blocks
- Loadings to be carried by the bridge and their location

Design attachments that use a single anchor at each attachment point to remain serviceable if one of the other nearest attachments were to fail.

Place holes in transverse members near the inside face of the outside longitudinal beams.

Maintain the alignment of utility holes as straight as possible, both vertically and horizontally, to avoid difficulties in placing utility pipes.

Construction tolerances and variables need to be considered in the design of brackets and hangers. Incorporate slotted holes, adjustable rod lengths, etc. into the attachment design.

Where utility holes are provided in the ends of the bridges for future utilities and an approach slab is required, provide each hole with concrete culvert pipe, galvanized smooth steel pipe (1/4" min. thickness), or Sch. 40 PVC pipe of the same inside diameter as the utility hole, extending from the hole to a point 5 feet minimum beyond the end of the approach panel. Extend such pipes parallel to the centerline of the bridge. Form a hole 1 inch larger in diameter than the pipe into the backwall or end beam. After the pipe is installed, fill the void around the pipe with a compressible material.

Utility holes and pipes under end panels may need to be a larger diameter to accommodate joint splices, couplers, or bells at connections.

In the absence of specific instructions from the utility company, provide hot-dip galvanized expanded coil concrete inserts with closed-back ferrule, threaded for 3/4" diameter bolts installed in the deck at 10 foot maximum centers above each line of utility holes(minimum insert length 5-1/2", minimum safe working load in tension 6000 pounds). If the inserts are not to be used immediately, install short galvanized bolts in the inserts to prevent rusting of the threads.

Encased conduit is to be PVC or approved equal pipe. Hot-dip galvanize external steel conduit.

Provide suitable expansion joints at bridge expansion joints.

Hot-dip galvanize steel utility supports, including fasteners and anchorages.

Steel Bridges – Suspend utility lines from the deck; do not hang from cross-frames, diaphragms, or main beams.

Prestressed Slab or Box Bridges - Provide for future utilities through the end wall closure pours with capped 8 inch diameter blockouts or by embedding a 6 inch diameter PVC pipe in the wall and extending it 8 to 10 feet beyond the bridge bent. See *Appendix Figure A1.11.1.7A*.

3.14.10.4.1 Potential Maintenance Problems

Do not hang utilities against the sides of decks that have no curb. If required to put them on the side, move them out from the deck so they do not trap debris.

Avoid exterior mounted utilities in heavily sanded areas.

Some bridges have drains through the concrete railing, do not attach utilities below these drains.

Avoid attaching utilities to timber elements. Many timber elements require replacement during the bridge's life.

Avoid going through shallow end bents with no impact panel and a history of approach settlement. Excavation may increase settlement, settlement may cause the utility to shear, or the utility may get in the way of installing sheet pile or impact panels in the future.

The utility will agree that they will promptly respond to and provide a process to repair failing utilities and removing abandoned utilities.

3.14.10.5 Special Utility Considerations

(1) Gas Lines

Gas lines, or other lines carrying volatile materials, are to be Schedule 40 steel pipe or approved equal, and cased full length of enclosed or box type bridges. Install automatic shut-off valves at or near each end of the bridge.

Casings must be vented to outside of the bridge at each end and at high points.

Protect exposed lines from damage, both accidental and intentional. This could include barrier and fencing with locked access.

Provide transverse supports for gas lines.

Submit proposals for approval with details of the pipe, casing, vents and attachments to the bridge. Submit calculations to show that the proposed piping and casing system will be adequate for the intended purpose.

Gas line corrosion protection systems should be reviewed by the Bridge Section Preservation Unit.

(2) Water Lines and Sewer Lines

Case water and sewer lines placed adjacent to bridge footings if failure of the line could cause undermining of the footing or be an environmental hazard.

Water lines are to be hot-dip galvanized steel, ductile iron pipe, or approved equal. Corrosion protection systems may include cathodic protection.

Provide transverse supports near each coupling for water lines.

In box girders, make provisions for a water line failure. Provide additional drain holes or grating at low points in the cells. Provide low pressure sensing shut-off valves fully encase the line.

Provide water line thrust blocks as required.

(3) Traffic Barrier

Limit the number and size of conduits in the bridge rail to assure ease of placement and proper consolidation of the concrete. Give special attention to details at expansion joint couplings because these tend to be much larger in diameter than the conduit.

3.14.10.6 Attachments to Existing Bridges

Requests for attachments to existing bridges normally come to the Region‘s District Manager. The District Manager submits the proposal to Bridge Section Preservation Unit for review, comments, and recommendations. The Regions will make the final decision on any proposal. See *SP 00589* – “Utility Attachments on Structures” for additional requirements.

Review attachments to existing bridges with the same concerns and considerations of new bridges. Some additional concerns include:

- Attach conduits or brackets to concrete bridges with resin bonded concrete anchors.
- Consider Mechanical anchors on a project-by-project basis if the following considerations are satisfied:
  - Anchors are of a type that will maintain capacity under dynamic or vibratory type loads.
  - Provide at least two anchors (4:1 safety factor per anchor) per attachment for redundancy, or design attachments with a single anchor to provide a factor of safety of 6:1.
  - Avoid drilling through reinforcing steel. If critical reinforcing steel is hit, move the anchor location and patch the hole with an approved patching material. The level of concern about cutting reinforcement depends on the location of the section, amount of reinforcement at the section, and the type of reinforcement (moment, shear, temperature, etc.).
  - Protect exposed pipe and hardware against corrosion.
  - Include utility hanger details in the utility request.
  - Drill holes with low-impact rotary drill.
  - Patch any abandoned holes.

3.14.10.7 Utility Costs and Agreements

On new construction, the State normally provides the concrete inserts in the deck for hangers, holes through diaphragms, crossbeams and endwalls, and pipes under the end panels. This is regarded as providing minimal accommodation which essentially has zero or negligible cost ("de minimus", or below the threshold of actually costing the program) compared to not providing these items, and is acceptable per a January 2005 opinion from the Oregon Department of Justice. All other costs for materials and labor related to the utility installation are the responsibility of the utility company.

If a utility company requests the addition of conduits in a sidewalk or concrete rail, special attachment brackets, inspection walkways, etc., it is the expense of the utility company.

In such a case, an agreement is needed between the State and the utility company before the work can be included in the project. The Utility & Railroad Coordinator in the Right of Way Section writes the agreement. Notify the Utility & Railroad Coordinator as soon as possible in the project development process (preferably at the TS&L stage or before), to ensure an agreement can be reached and the work can be included in the project.

3.14.11 Railroad

Coordinate all site visits in which you will be on railroad right-of-way, or off railroad right-of-way but within 50' of the railroad track, with your Project Leader or Project Manager and the Utility & Railroad Coordinator. It is illegal to enter upon railroad right of way without proper permissions, PPE, and training.

3.14.11.1 Permits

If the bridge is over a railroad track, the Bridge Designer will be involved with providing information for the railroad permit applications.

Much of the information supplied for railroad permit applications by the Bridge Designer is in the form of drawings with specific data shown. TS&L Plan-and-Elevation drawings and vicinity maps are normally used as a basis for special permit drawings, but they should be stripped of any information not needed to obtain the permit. Keep in mind: the people reviewing the applications are not structural designers. They do not have time to sift through many drawing details and dimensions not relevant to the permit approval.

3.14.11.2 Railroad Considerations

When scoping bridge repair work above or adjacent to the Union Pacific Railroad right-of-way, consider the following items that may be required:

1. A plan review by UPRR's engineering personnel in Omaha, Nebraska. Expect a thirty working day turnaround.
2. Crash wall addition. This would add approximately $250,000 for each wall.
3. Drainage review.
4. Protective fencing.
5. UPRR will want reimbursement for their involvement in the preliminary review work.

UPRR standards require crash walls if a pier, foundation or abutment is within 25 feet of an existing or future track centerline. Protective fencing is required on all bridges. ODOT maintains its own drainage. UPRR acknowledges existing construction and maintenance agreements, and will consider this for each review. Minor repair work will not warrant the safety upgrades to the bridge. The ODOT Utility & Railroad Coordinator should be consulted early in the process for any bridge work that could trigger these requirements.

3.14.11.3 Railroad Clearances

Show project specific design clearances, construction clearances, and shoring clearances on the contract plans.

Design Clearances – Clearances required for permanent construction over railroads are shown in the design guides provided by the railroads or on the railroad's website. See *Section 2.7.3.8* and *Figure 2.7.3.8A*.

Shoring Clearances – Shoring clearances required for construction adjacent to railroads are shown in the design guides provided by the railroads or on the railroads website.

A shoring diagram showing the proposed excavation relative to the tracks and all other pertinent information as detailed in the design guides.

Construction Clearances – Construction clearances required for construction over railroads are shown in the design guides provided by the railroads or on the railroad's website.

Show a construction clearance diagram similar to *Figure 3.14.11.3* on the plans.

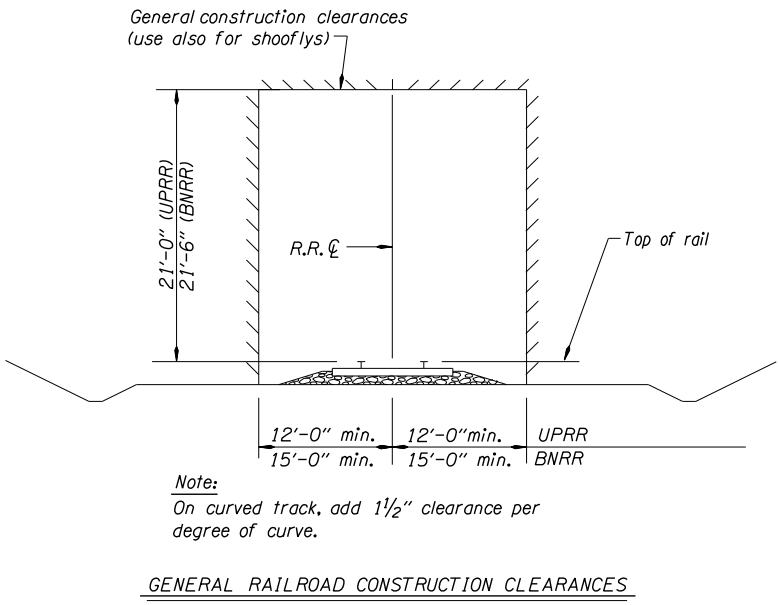

Figure 3.14.11.3

Note: All horizontal clearances shown are for tangent track. On curved track, increase the lateral clearances per AREA Specifications. For special cases, such as in yards, lesser clearances may be agreed to by the Railroad.

3.14.12 Public Involvement

See PDLT Operational Notice PD-12.

[Reserved for future use. (Talk about possible need to prepare exhibits and provide info to the Project Leader, Project Manager, Bridge Design Manager, or PI folks for public presentations.)

3.15 (RESERVED)

3.16 (RESERVED)

3.17 BRIDGE TYPES & SELECTION GUIDANCE

Outline:

3.17.1 Bridge Types and Economics

3.17.2 Substructure Guidance

3.17.3 Special Considerations for Federal-Aid Projects

3.17.4 Use of Salvage Materials

3.17.1 Bridge Types and Economics

(1) General

Bridge type is generally the most important factor influencing bridge costs. (Substructure considerations are typically second.) Each project site is unique and should be evaluated for conditions that alter the usual cost expectations. For the following discussion, bridge type generally means classification of superstructure spans by construction material and method of construction.

As can be determined from the Bridge Section's annual *Structure Cost Data* books, bridge types in order of increasing costs are as follows:

Bridge Type	Span Range
Precast concrete slabs	up to 83 feet
Precast concrete box beams	up to 120 feet
Cast-in-place concrete slabs	up to 50-66-50 feet
Precast integral deck concrete girder	up to 130 feet
Precast concrete girder, BT72	up to 140 feet
Precast concrete girder, BT84	up to 160 feet
Precast concrete girder, BT90 & BT96	up to 183 feet **
Cast-in-place box girder	*
Cast-in-place post-tensioned box girder	*
Steel girder	*
Steel truss	*

*Normally used for longer, multi-span continuous bridges.
** Length for BT90 & 96 is limited by prestressing bed capacity for Oregon precasters.

When using precast or prefabricated girders, verify that there is an acceptable route for shipping. As girder lengths increase, shipping becomes more difficult on roadways with sharp curves, high superelevation and/or load-restricted bridges.

Timber bridges up to 30 feet of length may be considered for special situations (See *Section 1.8.1*). The cost of a timber bridge may be more than a concrete bridge of the same length.

Do not use cast-in-place concrete slabs with any span greater than 66 feet. Cast-in-place concrete slab superstructures have significant dead load deflections. Even if actual deflections match estimated deflections, it will likely take 10 to 15 years for creep deflection to diminish. For longer span lengths, the ride quality would be unacceptable while waiting for the creep deflection to occur.

Do not use voids in cast-in-place concrete slab superstructures. Although such designs are effective at reducing the structure weight and dead load deflections, it is very difficult to secure the voids in the field. The potential for failure is unacceptably high.

When cast-in-place slabs are used, ensure the edge beam requirements in *LRFD 4.6.2.1.4, 5.14.4.1 and 9.7.1.4* are met.

Where a design deviation is approved by the State Bridge Engineer for use of voids in a cast-in-place concrete slab superstructure, apply the edge beam requirements listed above to this type of bridge.

Use HPC concrete in cast-in-place concrete slab superstructures. Place concrete full-depth of the slab (i.e., no horizontal construction joints). For cast-in-place slab superstructures having any span greater than 40 feet, apply a deck sealer product (from the QPL) at least 60 days after placement of the slab.

(2) Precast Concrete versus Cast-in-Place Concrete

Formwork is the key to concrete structure costs. Use of standard forms or repeated use of specially built forms means lower costs. For smaller bridges in remote areas, precast or shop-fabricated elements usually lead to the most economical solution. Also see *Section 3.24*, Accelerated Bridge Construction, for more guidance in the use of precast elements.

Precast concrete slabs have the following advantages:

- Good for shorter stream crossings, low-volume roads, and remote locations
- No falsework required in roadway or stream
- Fast, simple installation, saving construction time
- Shallow depth providing greater clearance to stream or roadway surfaces below

However, they have problems with:

- Providing smooth riding surfaces. (AC wearing surface is required to level up except for low-volume roads.)
- Accommodating horizontal curves, gradelines, or superelevations. (Thickness of AC wearing surface to accommodate superelevation can become excessive.)

Precast concrete box beams, girders, and integral Bulb-T beams have most of the same positive and negative points as precast concrete slabs. They can accommodate longer spans, but they do have deeper depths resulting in less clearance to stream or roadway surfaces below.

In general, cast-in-place concrete spans are a good choice for:

- Accommodating horizontal curves, gradelines, or superelevations
- Longer spans

However, three drawbacks are:

- Falsework is required
- Falsework in the roadway below a grade crossing creates traffic hazards
- Settlement of falsework before post-tensioning begins is a potential problem

(3) Continuous Steel Span Bridges

Steel construction extends the span length range and usually does not require falsework in the roadway or stream.

(4) Bridge Widening

Generally, the same type of construction that matches the existing bridge should be used for the widened portion.

(5) Design Criteria for Major or Unusual Bridges

Some elements of design criteria for major and unusual bridges may not be appropriate for normal bridges and may be dependent on the location and expected service level. For those bridges the design criteria will be established specifically for each bridge in a collaborative effort between ODOT Bridge Engineering Section and the Region. Early coordination is required to allow time to establish the design criteria. See *Section 3.17.3(2)* for further guidance regarding Unusual Bridges.

(6) Maintenance and Provisions for Inspection of Bridges

- Formal constructability and maintainability reviews by representatives of the Construction and Maintenance Sections are required for most bridges to determine the practicality and feasibility of erection/construction of the bridge as assumed in the design as well as adequacy for future maintenance.

- Preparation of an Inspection and Maintenance Guide for the future operation of each major or unusual bridge (see *Section 3.10.8*).

- Consider designing for the possibility of future bearing replacement. Bearing replacement requires the use of jacks to lift the superstructure off the bearings to be replaced. Indicate the position of these jacks, and allowable jacking loads, on the drawings. Provide distribution reinforcement to accommodate the jack loads in the top of the piers and the soffit of the superstructure. Further, consider the relocation of the reactions in the transverse analysis of the superstructure when the jacks are engaged to replace the existing bearings.

3.17.2 Substructure Guidance

See *Section 1.11* for information to guide bent and wingwall layout.

3.17.3 Special Considerations for Federal-Aid Projects

(1) Alternate Designs

According to the Federal Highway Administration (FHWA), the practice of providing alternate designs for major bridges results in substantial savings in bridge construction costs. Current FHWA policy states that use of alternate designs is optional and at the discretion of State highway agencies. If alternate designs are appropriate, consider the following:

- Utilize competitive materials and structural types.

  Prepare each alternate design using the same design philosophy. (That is, LRFD design, finite element, etc.) Ensure the design/construction requirements for the entire bridge (foundation, substructure, deck) are compatible.

- Prepare estimates for all Alternate Designs during the TS&L design phase.

Note: Do not confuse this 'Alternate Designs' with the TS&L 'Alternatives Study'. This Alternate Designs is the actual preparation of two or more designs, and plan sheets, to be included in the bid documents.

(2) Unusual Structures

FHWA policy requires "unusual bridges" to be approved (by FHWA) before being designed. An "Unusual bridge" may have:

- Difficult, new or unique foundation elements or problems
- A new or complex design concept involving unique operational or design features
- Design procedures which depart from current acceptable practice

Examples of unusual bridges include:

- Cable-stayed, suspension, arch, segmental concrete, moveable, or truss bridges, and other bridge types which deviate from AASHTO *Design Specifications* or *Guide Specifications*
- Bridges requiring abnormal dynamic analysis for seismic design
- Bridges designed using a three-dimensional computer analysis
- Bridges with span lengths exceeding 500 feet
- Bridges with major supporting elements of ultra-high-strength concrete or steel

Other unusual structures include:

- Tunnels
- Geotechnical structures featuring new or complex wall systems or ground improvement systems
- Hydraulic structures that involve complex stream stability countermeasures
- Designs or design techniques that are atypical or unique

Where unusual bridges are identified, seek FHWA involvement at Project Initiation. Do not advance the design beyond TS&L without FHWA approval.

(3) Experimental Features Program

An experimental feature is a material, process, method, or equipment item that:

- Has not been sufficiently tested under actual service conditions to be accepted without reservation in normal highway construction, or
- Has been accepted, but needs to be compared with acceptable alternatives for determining relative merits and cost effectiveness.

Although the Experimental Features Program is normally used in conjunction with Federal-Aid projects, the program format has occasionally been followed for projects funded entirely with State funds. In some cases, FHWA has paid part of the research cost for basically a State-funded experimental program.

The intent of the Federal-Aid Experimental Features Program is to allow ODOT time to develop, test, and evaluate specifications for new, innovative, or untried products or processes.

(4) Specifying Proprietary Items

To encourage competitive prices from manufacturers and suppliers, FHWA has established a policy for specifying proprietary products or processes for Federal-Aid projects. Generally, "proprietary" means:

- Calling out a product on plans or in specifications by brand name
- Using specifications written around a specific product in such a way as to exclude similar products

The policy basically says:

- You must use two, preferably three, products when specifying by name brand
- You can use generic specifications patterned after a specific item if at least two manufacturers can supply the item

On the other hand, specifying one proprietary item is allowed only:

- If it qualifies for the experimental features program
- If, with written justification from ODOT, FHWA specifically approves in advance a single product, which is essential because of compatibility with an existing system, or the only suitable product that exists

(5) Use of Debris from Demolished Bridges and Overpasses

Public Law 109-59, dated August 10, 2005, Section 1805 mandates that for Federal-Aid bridge replacement and rehabilitation projects, States are "directed to first make the debris from the demolition of such bridge or overpass available for beneficial use by a Federal, State, or Local government, unless such use obstructs navigation." Links are provided for more information:

- Public Law 109-59 August 10, 2005: http://www.fhwa.dot.gov/safetealu/legis.htm

- FHWA Memorandum of March 7, 2006: http://www.oregon.gov/ODOT/HWY/BRIDGE/Pages/standards_manuals.aspx#FHWA_Memos

Note that environmental regulations may prohibit the use of debris in waterways.

3.17.4 Use of Salvage Materials

ODOT Bridge Engineering Section does not prefer the use of used bridge items. New materials are required for new and replacement bridges, and for added portions of widened bridges. Incorporation of used materials requires an approved Design Deviation (see *Section 1.2.2*). The following are issues to be considered and included in a deviation request.

1. Locate and include in the project records for the new bridge all original material certifications and documentation of material properties.

2. Document the condition of the used materials.

3. Locate and include a copy of applicable portions of the original calculation book in the project records for the new bridge. The copied portions may be scanned and transmitted electronically to the design engineer. Hard copies should be made and included in the calculation book for the new bridge.

4. Prepare a new calculation book for the new bridge.

5. Document agreement from FHWA (on Federal projects) with a Public Interest Finding processed through Roadway Section.

6. Designate on the new plans the portions of the new bridge that are built with salvaged materials.

3.18 BRIDGE LAYOUT

Outline:

3.18.1 Site Constraints

3.18.2 Spans and Proportions

3.18.3 Bridge Length

3.18.4 Substructure Guidance

3.18.1 Site Constraints

At the start of the Preliminary Design Phase, after collecting and reviewing available project data, start identifying site constraints that will impact or affect the bridge layout. Suggested items to discuss with respective project team members (list may not include all applicable items):

- Right of way
- Geology; poor soils
- Known buried hazardous materials
- Waterway; thalwag, potential scour areas
- Floodplains
- Riparian zones
- Wetlands
- Historic resources
- Archeological sites
- Buildings
- Parks
- Air space envelope
- Fluvial envelope
- Railroad envelope

Consider these items early in the bridge layout process. Learning of these constraints later may cause rework that can affect both schedule and budget.

3.18.2 Spans and Proportions

(1) Column Locations

Column locations, which of course affect span lengths, are subject to clearance requirements of *3.16.4.2, AASHTO* standard clearances, or by hydraulic considerations. After these conditions are met, spans lengths may also be governed by environmental issues, economics and aesthetics. Consider alternate structure types to best fit the needs of the site.

Protect columns located in the median of a divided highway and within the clear zone (as determined by the Roadway Designer), from traffic by a guardrail or concrete barrier. Check with the Roadway Designer regarding which barrier will be used. It will affect the bridge's appearance and may influence the type of column selected. See *Appendix Section 1.2* for column loading criteria for vehicular impact, depending on type and location of barrier used (ODOT Instructions for AASHTO LRFD 3.6.5).

Earth Mounds are no longer an acceptable method of column protection. At this time, however, existing

earth mounds do not need to be removed.

Consider the effects of columns in waterways when locating columns and setting span configurations. Consider the possibility for scour or difficulty in inspecting a column that is in the highest flow area of a river. Avoid placing the column directly in the middle of the river.

(2) Structure Depth

Structure depth (also referred to as superstructure depth) is generally controlled by span length and clearance limitations. Although a minimum depth structure may be aesthetically appealing, it may not be the optimal solution for the site.

For steel superstructures, use the minimum depth recommended in *LRFD Table 2.5.2.6.3-1* for estimating purposes.

For concrete superstructures, use the minimum depths given below:

Reinforced Concrete Superstructures:	Minimum Depth:
Balanced 3-span cast-in-place slabs with main reinforcement parallel to traffic	d = 0.542 + S/48
T-Beams	d = S/19
Box Girders, constant depth	d = S/21
Box Girders, with haunch = 1.5 d to 1.75 D	d = S/25

d = depth of constant depth members or depth at midspan of haunched member.
S = length c-c of bents or longest span of a continuous bridge.

Depths shown for slabs and T-beams are for constant-depth sections. Depth may be reduced 15 percent for beams with continuous parabolic haunches or with straight haunches equal to 1/4 the span where the total depth at the haunch is 1.5d.

Increase depths for simple span bridges by 10 percent.

Use the following minimum depths in lieu of those recommended by *LRFD Table 2.5.2.6.3-1*:

Post Tensioned Box Girders:	Minimum Depth:
Simple Span	d = S/26
Continuous, uniform depth	d = S/29
Continuous with minimum haunch = 1.5d	d = S/35

Precast Prestressed Concrete Superstructures:	Minimum Depth:
Slabs and Boxes	d = S/33
Bulb-I and Bulb-T girders	d = S/23

Depths shown for Bulb-I and Bulb-T girders may be reduced up to 15 percent for haunched girders made continuous. Provide either continuous parabolic haunches or straight haunches equal to 1/4 the span with a total depth at the haunch at least 1.5d.

Where minimum depth requirements, given above, are satisfied, the optional live load deflection criteria in *LRFD 2.5.2.6.2* will not be required. When minimum depth requirements are not satisfied, verify that the live load deflection does not exceed the limits recommended in *LRFD 2.5.2.6.2*.

When both minimum depth and live load deflection requirements are not satisfied, submit a request for a design deviation (see *Section 1.2.2*). As justification for the request, document girder and deck service stress levels, live load deflection, and provide evidence of similar structures already in service with satisfactory performance.

(3) Girder Spacing

Girder spacing is normally dependent on girder capacity. As span length increases, girder spacing should decrease. Limit deck overhangs to no more than one-half the girder spacing. Long deck overhangs tend to sag over time (even decks post-tensioned transversely).

3.18.3 Bridge Length

(1) General

Determine the bridge length by referring to the following as applicable:

- *Section 1.11.2.1*, "Determining Bridge Length"
- Bridge Standard Drawing *BR115*, "Standard Slope Paving"
- *Section 3.14.7.2*, "Hydraulic Requirements for Stream Crossings"
- *Section 3.14.11.3*, "Railroad Clearances"
- *Section 3.14.8*, (Wildlife passage requirements that may add structure length)
- Following Subsections (2) and (3)

(2) Width and Cross Section of Lower Roadway

For horizontal clearances, see *Section 3.14.4.2*. Choose the back-slopes as follows:

- Use 2:1 end fill slopes for all bridges unless the Foundation designer recommends otherwise.
- 1.5:1 end fill slopes are common for county roads and less-traveled highways. Review the ODOT *Highway Design Manual* *Figure 4-1*, "Standard Sections for Highways Other Than Freeways", but do not use a slope steeper than 2:1 unless a steeper slope is recommended in the Foundation Report.

(3) Stock Paths at Stream Crossings

Provisions for stock to cross the roadway should be located away from the bridge crossing to reduce concentration of pollutants in the stream. However, if a stock path running under the bridge parallel to the stream is required, additional bridge length will be needed to accommodate:

- Sufficient horizontal space and vertical clearance to construct a benched section for a path above ordinary high water
- A fence to keep stock out of the stream

Stock passes are also discussed in the ODOT *Highway Design Manual*.

3.18.4 Substructure Guidance

Read the *Foundation Report* for information and recommendations about type of foundation required, or talk to the Foundation Designer if the *Foundation Report* is not yet available. For stream crossings, recommendations for scour and riprap protection are contained in the *Hydraulics Report*.

3.19 SAFETY AND ACCESABILITY REQUIREMENTS

Outline:

3.19.1 Uniform Accessibility Standards

3.19.2 Inspection and Maintenance Accessibility

3.19.1 Uniform Accessibility Standards

The Uniform Accessibility Standards are to be used for the design of all Federal-Aid projects.

Design pedestrian overpass and underpass ramps to not exceed a 1:12 grade, and platforms located every 30 feet. Design other features such as handrails and stairs to comply with the standards. Obtain design deviations on a case-by-case basis, if justified.

For pedestrian structures, use FHWA publication *Guidelines for Making Pedestrian Crossing Structures Accessible* (FHWA-I-84-6).

(1) Wingwall and MSE fill slopes

Provide fall protection for wingwall and MSE fill slopes whenever the potential vertical drop exceeds 10 feet. Fall protection may consist of one of the following:

- Roadway barrier at the top of the slope may be considered adequate protection for the public in most cases. However, when the vertical drop at the face of the wall exceeds 15 feet, provide additional protection (safety cable, cable fencing, or chain link fencing) at the top of the wall.

- Safety cable at the top of the wall may be adequate when the slope is not accessible by the public, but access by maintenance personnel or bridge inspectors is anticipated.

- Provide cable fencing when no roadway barrier has been provided at the top of the slope and the slope is accessible to the public. Where a sidewalk is provided at the top of the slope without roadway barrier between the sidewalk and slope, the slope should be considered accessible to the public.

- Provide chain-link fencing or hand railing when pedestrian, maintenance or inspection access is provided adjacent to the top of wall.

Seek concurrence from the Region Safety Manager concerning the specific wall slope protection proposed.

Provide fall protection that is aesthetically appropriate for the site. In many cases, this may involve extending the system along the full length of the wall even though portions of the wall may have less than 10 feet of vertical drop.

(2) Design Criteria for safety cable

Design safety cable and cable fencing using the following criteria:

- Use 1/2" diameter galvanized wire rope with an independent wire rope core and having a minimum breaking strength of 26,000 pounds.

- Use galvanized cable connections and turnbuckles having a minimum ultimate strength at least as great as the cable strength.

- For cable fencing, provide a minimum of two cables with the top cable 36 inches high and the other cables evenly spaced.

- Space cable supports or posts at 10 feet or less.

- Design the cable support system to resist a vertical service load of 3000 pounds (5000 pounds ultimate) anywhere along the length of the cable.

- Design end posts and cable end connections to resist the minimum breaking strength of the cable. End posts for cable fencing need only be designed considering one cable loaded at a time.

3.19.2 Inspection and Maintenance Accessibility

Such facilities should meet the *Oregon Occupational Safety and Health Code and Oregon Safety Code for places of Employment* (*Chapter 2*, primarily). A copy of the code is located in the ODOT Bridge Engineering Preservation Unit.

For bridge rail height requirements related to inspection and maintenance, see *Section 1.13.1.1*, "Rail Selection", and *Section 1.13.1.1.2*, "Vehicular Rail – General".

Inspection walks must clear all required minimum clearances under the structure and cannot infringe or reduce minimum required waterway openings.

Provide inspection walks with sufficient headroom and width for inspection personnel to carry bulky equipment between walk rails without difficulty.

Consider inspection walks for wide and high bridges where the reach of the arm of an inspection crane is not long enough for proper inspection and maintenance of the bridge members.

Consider inspection walks combined with other facilities such as ladders, manholes and safety cables. Consider all critical areas that require close inspection such as fracture critical members, hinges, splices, hangers, expansion joints, bearings, utility lines, navigation lights, and areas that require frequent maintenance.

FHWA has recommended maintenance walkways between all steel girders. This has proven to be a costly item and should be reviewed on a case-by-case basis. These were provided on the Santiam River Bridge (Steel Alternate) Bridge 08123D, Drawing 47448. The detailed W5x15 walkway beams are not readily available. A W8x18 alternate is recommended, as this was substituted on the John Day River Bridge, Bridge 00108D.

3.19.2.1 Vertical Abutments and MSE Abutments

Provide access for inspection of bearings and shear lugs. When integral abutments are used, provide access for inspection of backwalls. Provide access consisting of the following:

- 3'-0" minimum walkway width - This is the clear width available for an inspector or maintenance worker to walk as needed for inspection and maintenance of bearings, shear lugs and backwalls.

- 4'-0" minimum height - This is the minimum height from the walkway surface to the bottom of girder. For bridges having a solid bottom, such as a concrete box girder, provide 5'-0" minimum.

- Safety Railing or Cable - Provide either safety railing or a safety cable. When a safety cable is used, attach the cable to either the backwall or cap (approximately 4 feet above the top of walkway) or to the bottom of the girders. Note that attachment to precast prestressed girders must be limited to the center 4 inches of the bottom flange. Locate the cable at least 2'-0" horizontal distance away from the vertical drop. Design the safety cable system using the criteria given in *Section 3.19.1(2)*. Alternatively, standard drawings *BR190* and *BR191* "Horizontal Fall Arrest Lifeline" details are now available. Where potential maintenance activity can be anticipated, such as replacement of bearings, locate the cable to avoid interference with potential bearing replacement and girder jacking operations. Where safety railing is used, design railing to be removable in sections to facilitate maintenance work.

- Access to the walkway - Provide access to the walkway using one of the following:

    - 3'-0" wide walkway along the top of the wingwall. Provide a safety cable or safety railing when the vertical drop exceeds 10 feet.

    - Cast-in-place steel U-bar ladder steps from the ground level (under the bridge) up to the maintenance walkway. In urban environments, place the first U-bar ladder step approximately 12 feet from the ground. Access to this first step will be by portable ladder. Ensure there is an adequate bench for the ladder to seat.

- Security - For bridges in urban environments, use gorilla bar safety railing and provide locked gates at each entrance to the walkway. Design gorilla bar railing to be removable in sections to facilitate maintenance work. See *Section 3.20*, "Bridge Design Security Considerations".

When the height from the ground to the bearings is 15 feet or less, inspection and/or maintenance can be performed with a ladder. If so, ensure there is a 5'-0" minimum bench at the top of slope to support a portable ladder. Where such a bench is not practical, provide cast-in-place steel U-bar ladder steps. Provide enough ladder steps so that an inspector is able to get within 3'-0" of any bearing.

3.19.2.2 Bridge Superstructures

ODOT policy is to use mobile access equipment for inspection and maintenance work whenever feasible. Fall arrest cable systems are recommended for bridges where access for inspection and maintenance is not feasible using snooper cranes or manlifts, and for ladders more than 20 feet tall. Situations where access by equipment is not feasible include trusses and arches that are too high or structurally congested to reach with manlifts, deck trusses that are too deep or structurally congested to reach with snooper cranes, deck trusses or plate girder bridges that are too wide (>4 lanes) to allow inspection by snooper crane, areas with typical daily winds over 30 mph, and heavily traveled bridges where a lane cannot be closed for the manlift or snooper crane. Ladders over 20 feet tall can be built without cages or landings if a fall arrest system is provided, per OSHA 1910.27(d)(5).

Provide permanent access to all cells of concrete box girders for utility access, inspections or other purposes. (See *Section 1.5.7.6*)

3.20 BRIDGE SECURITY DESIGN CONSIDERATIONS

Outline:

3.20.1 Bridge Security Design Considerations

3.20.2 Placing Building Beneath ODOT Bridges

3.20.1 Bridge Security Design Considerations

3.20.1.1 General

Consider project-specific countermeasures during the Scoping Phase for those structures which ODOT management determines need specific attention.

Potential bridge security threats include: “carried and placed” bombs, vehicle bombs, intentional vehicle or ship collisions, intentional fires, and other intentional and unintentional threatening activities. This section tells when and how to consider potential bridge security threats during the design of:

- New bridges
- Bridge widenings
- Bridge rehabilitation projects

3.20.1.2 Countermeasures

Four countermeasures can help protect structures against potential security threats.

Deter, Deny, Detect, Defend…

Deter: Prevent an aggressor from attacking the structure by making the security presence known such as police or other authorized personnel.

Deny: Prevent an aggressor from entering an unauthorized zone by a physical barrier such as security fencing, secure hatches or locked doors.

Detect: Observe unauthorized personnel in a restricted area by means such as cameras or sensors.

Defend: Provide ‘hardening’ measures to protect a component from attack.

3.20.1.3 Process

Assess the probable structure specific security risks:

- Remote,
- Possible,
- High, or
- Critical

Remote: Only applies to structures on remote, low volume ADT facilities. Implementation of security countermeasures normally not warranted.

Possible: Applies to structures on the non-freeway State Highway System. Consider implementing security countermeasures associated with Deterring and Denying access to the structure. Ideas to consider include:

- Locate box girder soffit access openings away from abutments requiring a ladder or other mechanical means to gain access
- Provide shielded locking mechanisms on all access openings
- Place secure screens at soffit vents near abutments
- Prevent access to maintenance walkways and girder flanges at abutments
- Post warning signs on the bridge approaches and below the structure
- Deny access to critical structural components
- Prevent vandalism, graffiti artists, or 'homeless condos'

High: Applies to structures on the Interstate Highway System. Consider implementing security countermeasures associated with Deterring, Denying, Detecting, and Defending the structure. In addition to the items listed under 'Possible', include the following:

- Establish guidelines for standoff distance
- Eliminate access to small confined spaces

Critical Structures: These are structures that have been determined to be the most vulnerable structures in the State of Oregon.

Some bridges, due to their complex and unique nature, will require project-specific countermeasures along with those countermeasures that apply to all structures. These are bridges considered "critical" to the transportation network. The most critical bridges will also require site-specific operational security plans. The ODOT Emergency Preparedness Committee identified critical bridges and their potential vulnerabilities. To find out more, contact the Statewide Emergency Operations Manager in the ODOT Office of Maintenance and Operations.

Consider the need for security countermeasures during the Scoping Phase to ensure that added costs are included in the project budget. Define countermeasures and security plans and include in the TS&L Report. The Bridge Designer is to consult with the ODOT Bridge Operations & Standards Managing Engineer for security guidance and to maintain consistency statewide.

If the Bridge Operations & Standards Managing Engineer decides a critical bridge needs specific mitigation measures, consider these strategies first:

- Locate piers and towers so vehicular access is prevented.
- Design redundancy with critical elements.
- Place barriers to provide standoff distance when critical structural elements cannot be located away from vehicular traffic. If this cannot be achieved, the critical structural member or mechanical system should be analyzed and hardened against the design threat.
- Install locks, caging, and fencing to deny access to key points of vulnerable structural and mechanical systems.
- Install motion detectors or security cameras, and plan for communications to security response entities, to minimize "time-on-target."

When cost-effective, consider selective protection of the structural integrity of key members against collapse. Ways to do this include strengthening key substructure members, adding redundancy, and use of blast hardening.

Again, consider project-specific countermeasures during the Scoping Phase for those structures which ODOT management determines need specific attention.

3.20.2 Placing Buildings Beneath ODOT Bridges

The placement of buildings beneath ODOT bridges is strongly discouraged. However, if local public agencies request and are given approval to place buildings below ODOT bridges, satisfy the following requirements:

- Maintain the structural integrity of the bridge:
  - Shore excavations that extend below the bottom of bridge footings adjacent to the proposed building according to Standard Specifications *Section 00510.44*.
  - Replace any soil removed within the vicinity of a bridge footing and compact according to Standard Specifications *Section 00510.46(a)*.
- Bridge maintenance provisions:
  - Provide 10 feet of vertical clearance between roof and superstructure for operation of snooper cranes, or for hanging scaffolds; or
  - Design the building's roof system to act as a work platform for maintenance or construction activities. Provide 3 feet minimum vertical clearance between roof and superstructure. Design the roof sheathing and purlins for a working load of 250 pound point load or 100 psf, whichever controls. Extend the design area 10 feet beyond the shadow of the structure. Design members below the purlin level for a working load of 50 psf over an area of 10' x 20'.
- Future seismic retrofit provisions:
  - Place the building to allow for increasing the size of the existing footing or footings by 50 percent plus an allowance of 5 feet for work area.
  - Make the building owners aware that future footing excavations or pile driving could cause vibrations in the building with a potential for damage to the building or contents. And that the State will not be responsible for any damage to the building or contents caused by such construction.
- Future bridge replacement or widening provisions:
  - Evaluate the need for a new bridge or future widening of the bridge. If the potential exists, allow for increasing the bridge width and construction of new footings. Allow 5 feet around the future footings for work area.
  - Make the building owners aware that future footing excavations or pile driving could cause vibrations in their building with a potential for damage to the building or contents. And that the State will not be responsible for any damage to the building or contents caused by such construction.
- Falling object protection:
  - Place protective fencing on the bridge above the building to cover the limits of any ground activity below the bridge.
  - Make the building owners aware that the State will not be responsible for any damage to the building or content caused by falling objects.

- Bridge fire protection:
  - The building shall be constructed of non-flammable materials and be equipped with an automatic sprinkler system.
  - The building shall not be used to store large quantities of flammable materials.
- Right of Access:
  - ODOT and or contractor employees shall be given access to the property and/or building as needed to perform any construction or maintenance activities.

Submit proposals to the District Manager and the Bridge Operations & Standards Managing Engineer for review and approval. Include a drawing or drawings showing the existing bridge with all pertinent members dimensioned, and showing the proposed building with all pertinent dimensions, clearances, materials and roof design loads. The drawing or drawings shall be prepared, signed, and stamped with a seal of an engineer registered to practice in the State of Oregon.

3.21 STRUCTURE APPEARANCE AND AESTHETICS

Outline:

3.21.1 General

3.21.2 Location and Surroundings

3.21.3 Horizontal and Vertical Geometry

3.21.4 Superstructure Type and Shape

3.21.5 Bent Shape and Placement

3.21.6 End Bent Shape and Placement

3.21.7 Parapet and Railing Details

3.21.8 Colors

3.21.9 Textures

3.21.10 Ornamentation

3.21.1 General

Keep in mind the structure appearance with respect to its surroundings and the context of the site.

ODOT has no general directive or mandate on aesthetics or aesthetic design. This section is a guideline to generally accepted practice.

Generally for bridges, appearance is best when elements are few and simple.

Bridge elements are pleasing when the structural intent is clear with respect to the size and shape of the element. Elements forced into a non-structurally responsive shape for decoration are not considered aesthetically pleasing and may be a significant distraction and a safety hazard. Decorations on bridges that are not part of the structural support system may not be maintained to the same level as the structural portions of the bridge unless a separate IGA is executed with a local agency for maintenance.

Aesthetics and environmental considerations may have apparent conflicts. Historic or environmental issues may impact the bridge rail type, structure configuration, type of foundation or bent placement. Start the permit application and coordination process for historic structures as early as possible in the design stage. Aesthetics concerns, especially within an existing documented site context, are valid issues that can and should impact resource agencies permitting considerations.

There is a misconception that improving appearance always costs more. This is not necessarily true. The challenge to the engineer is to use creativity and ingenuity to improve the appearance without increasing cost. When people think that improved appearance is going to add costs, they are generally thinking in terms of add-ons, special ornamental features or special colors. The greatest aesthetic impact can be made by the structural elements themselves. These are seen first, and at the greatest distance. The bridge can be made attractive if these major elements are well shaped, and if they fit in well with the surroundings.

The following topics are commonly known to assist in producing visually pleasing structures. They are discussed in more detail in the following sub-sections.

- Location and surroundings
- Horizontal and Vertical Geometry
- Superstructure Type and Shape
- Bent Shape and Placement
- End bent Shape and Placement
- Parapet and Railing Details
- Colors
- Textures
- Ornamentation

3.21.2 Location and Surroundings

When determining the appearance of a bridge, the bridge must be considered in context with its surroundings. Decisions need to be made regarding what color, shape and type of bridge will look best at a given location. The surrounding area may be industrial, urban, or rural. A bridge that looks pleasing in a rural setting may look totally out of place in an urban area.

Individual bridges that span a major land area or body of water, because of their large size, dramatic location, and carrying capacity, will tend to dominate their surroundings. While these structures must harmonize with the surroundings, their importance and size requires that the aesthetic qualities of the structure stand on their own. Multiple bridges seen in succession create a cumulative aesthetic impact on the landscape that must be considered. In these situations, there is more reason for uniformity, and there should be no noticeable differences between structures, without an obvious reason. A specific theme for a particular route, such as a parkway, is often appropriate.

Routine bridges, such as highway overpasses and stream crossings, should be simple, with minimal changes, and with all of the elements in clear relationship with one another. Since many of these bridges are viewed in elevation by those traveling on a roadway below, the structure type, span lengths, and proportions, as viewed in elevation, should be carefully considered.

Bridges that are infrequently viewed, such as those on lightly traveled roadways, are rarely seen by anyone. In these cases, attention to the elements that can be seen from the roadway surface such as parapets, railings, transitions, and road surface, are important.

3.21.3 Horizontal and Vertical Geometry

Geometric design standards often dictate the orientation of a bridge. The emphasis is on the need for safe, convenient driving and providing a more attractive highway system. Bridges must adapt to the highway alignment. Thus, they often lie within the curvature of the road and follow the slopes or curvature in elevation. Large curvature is not only desirable from a safety standpoint, but also for aesthetics.

With skewed structures, when it is necessary to orient the substructure parallel to the feature crossed, a wide bridge presents a greater visual impact. The use of natural surfaces that blend in with the surrounding environment may lessen the visual impact. Bents and end bents in waterways that lie parallel to the river's banks look better than those placed perpendicular to the crossing road.

If an alignment requires a curved bridge, then the external longitudinal lines, traffic barriers, and fascia lines of the structure should follow the curved centerline to provide a smooth visual flow. A smooth transition helps the structure fit in with the local topography. Parallel lines should be maintained by

matching barrier, sidewalk, curb and fascia depth across the structure.

3.21.4 Superstructure Type and Shape

The appearance of a bridge is greatly influenced by different aspects of the superstructure. These include the superstructure type, depth, overhang width, number of spans, and span lengths. One way to make the structure light and slender, without making it appear weak and unsafe, is to use a favorable visible slenderness ratio (the ratio of span length to the visible structure depth, including the decking and any concrete traffic barrier or steel railing). The typical visible slenderness ratio will vary from approximately 10 to 40 depending on the type of superstructure chosen.

A girder depth that is too shallow gives the appearance that the bridge is not structurally safe. A girder that is too deep makes the bridge look bulky and overpowering. Bridges with a well-proportioned slenderness ratio denote strength without excessive materials.

An additional guideline that enhances the appearance of multiple spans is to avoid changing girder depths from one span to another. This would give a very awkward appearance and would not allow the structure to flow evenly across the bridge. From an aesthetic standpoint, deck overhang should be proportional to the girder depth; a desirable overhang would be about 2/3 the girder depth. Vertical stiffeners make steel girders seem heavier, and should be avoided on the fascia side of fascia girders. Haunched girders can make a bridge look more slender, and help demonstrate the flow of forces in the bridge. Fishbelly girders create a heavy look, and could tend to look awkward. Some structure types are more visually elegant than others, such as trapezoidal box girders and concrete segmental bridges. An arch bridge is one of the most natural bridge types, and generally considered one of the most pleasing. Both thru and deck arches can be considered.

3.21.5 Bent Shape and Placement

The visual impression that a person gets from a bent is primarily influenced by the proportions, the relative width and height, and the configuration of the bent cap with respect to the bent columns. Bent proportion, in turn, is determined by the bridge geometry and superstructure type and shape. Bents can broadly be classified as either short or tall. Short bents are typically more difficult to design with aesthetic proportions. Care should be taken in proportioning a bent to make sure that horizontal lines of the superstructure are not interrupted. Large bents may direct attention away from the superstructure. Bents that are too slender may convey a feeling of instability.

However, there are aesthetic issues that are common to all bent types involving the shape of the columns and the bent caps. The selection of the proper bent type can be dictated by the site, bridge geometry and design considerations.

The shape and location of the columns affect the appearance of the bents. The light reflecting from the surface often controls how the viewer perceives it. A square or rectangular column with beveled corners will appear more slender due to the edge lines and varying shades of reflected light. The designer needs to assure that the treatments used are in harmony with the rest of the structure. Bent caps, cantilevered ends, and column spacing can be designed to make the bent appear more graceful. For hammerhead bents, the stem width and height, and the cantilever length and depth should be carefully balanced, and in pleasing proportion. Solid bents can be battered to improve their appearance. The batter should be determined by the bent height and the relative dimensions at the top and bottom of the bent. Gradual lines are important. While tall bents are less common than short bents, they allow a greater opportunity for aesthetic treatment.

3.21.6 End Bent Shape and Placement

For most simple span bridges and some multi-span bridges, the end bents are the most visible elements. While the end bent's function is to support the superstructure and transfer loads to the ground, it is important to maintain proper proportion in order to create a good appearance. Good proportions between various elements of the bridge give character to the bridge. For the end bents it is important to consider the relationships between the exposed end bent height and length, the size and type of wingwalls, and the superstructure depth. An attempt should be made to achieve a balance between these elements.

The designer must maintain order between the lines and edges of the structure. Too many lines, or lines that are close to but not parallel to each other, can disrupt the eye and diminish the appearance of the bridge. The monotony of a large flat wingwall can be broken up using textures such as scoring, recessing, or grooving. Surface textures, either by using or simulating natural stone around the area of the bridge, can be used to integrate the structure with its surroundings.

The orientation of the end bents to the feature crossed will create different visual appearances. End bents on severe skews can have very long stems and wingwalls. Consideration should be given to the aesthetic impact of those concrete surfaces. Wingwalls are often very predominating features. The orientation of the wingwalls allows for more or less visual impact. On divided roadways, the view presented from the opposite direction of travel should be considered.

3.21.7 Parapet and Railing Details

The railings or barriers, along with the deck fascia and fascia girders, are sometimes the most dominant visual aspect of the bridge. The railings are viewed by people traveling under the structure who see them in elevation and by people in vehicles on the bridge traveling parallel to them. When vehicle speeds are high, the railing or barrier should have simple and pronounced details because passengers cannot notice fine details. The shape of the railing or barrier system should relate to its function and the overall aesthetic design of the bridge.

The design and appearance of any fencing to be placed on the bridge should be consistent with the railing or barrier system. The vertical supports of the screening should align with the railing post spacing. Fencing on concrete barriers should be detailed to match the construction joints and the ends of the barriers.

3.21.8 Colors

When there is a reason to color the concrete, steel, or railings, a decision should be made whether the color should complement or contrast with the surrounding environment. Strong consideration should be made to the fact that colored concrete or steel will require a high level of maintenance. The designer should also consider the appearance if regular maintenance is not performed (e.g., peeling paint, rust spots, etc.).

Coloring agents are not allowed in concrete because of complicated quality control, difficulty in matching colors in each batch, and the high cost of materials. It is nearly impossible to get an identical color of concrete from one pour to the next, or over a period of time between placements. Staining concrete can create a mottled appearance when appropriate to match natural stone, and can be effective if a trial section is used to qualify the process. External coatings are allowed, and when applied correctly can achieve the desired appearance. However, they have durability limitations, and must be used with caution due to concern regarding the owner's ability to maintain the coating.

3.21.9 Textures

Texturing concrete can be achieved through form liners, panels, stone or brick veneer, or acid washing. Any texturing should fit in within the overall design and proportions of the structure.

Several types of commercial form liners are available. Natural stone or brick facades can also be used. Stone is most often used for parkway bridges and those in rural settings. The cost of stone covering can be quite high; and should therefore be limited to areas of high visibility and established contextual settings. When a concrete cap is used on the top of a wingwall or retaining wall, it should be visually proportioned to the wall itself.

3.21.10 Ornamentation

Ornamentation can be added to a bridge in special circumstances. The additional cost of add-ons is rarely justified except in cases of importance to the community (such as a gateway to a city) or of historical significance. Details such as ornamental light posts, columns or pylons, real or simulated gatehouses, commemorative plaques or reliefs may be added. The designer should consider these details carefully since it is just as easy to detract from the overall appearance of the bridge, as it is to improve it.

Such details are secondary to the primary purpose of the structure, which is to provide a safe and efficient crossing to the public. Ornamental and non-structural details require additional coordination, sketches and drawings to ensure that the details will add to the aesthetic characteristics of the structure in a way acceptable to all concerned.

Local stakeholders sometimes request ornamental screening and features on overpass structures to showcase local attractions as a gateway to their community. Ornamental protective screening should not be a distraction to drivers, and must not cause sight distance or clearance problems. Treatments must not reflect a commercial interest. *See 1.13.3* for additional screening requirements.

3.22 BRIDGE NAME PLATES & MARKERS

Outline:

3.22.1 Existing Name Plates

3.22.2 Bridge ID Markers

3.22.1 Existing Bridge Name Plates

Specify that existing bridge name plates be salvaged and delivered to the office of the ODOT Construction Project Manager.

3.22.2 Bridge ID Markers

Specify that bridge identification markers be installed at the bridge site by the construction contractor, unless the Region has an arrangement with District Maintenance to install the markers in-house. Show bridge ID marker placement locations in the bridge contract plans (typically on the Deck Plan, Detail Reference Number 81) and incorporate them into the Special Provisions. Bridge ID markers are not part of the project signing and should not be shown in the sign plans.

Place the ID marker at both ends of the bridge, typically in the bridge rail transition, facing on-coming traffic. If the structure is located over another route, place additional bridge identification markers on the face of the bridge bent, immediately adjacent to and on both sides of the under-crossing roadway, facing on-coming traffic.

For mounting in bridge rail transition areas which have timber posts, the bridge ID marker is attached to a cut off Type-1 steel roadway delineator post. The steel post is attached to a guard rail post as shown in "Type-4, Alternate 2" on Standard Drawing TM570. For mounting in rail transition areas which have steel posts, the ID marker is attached to a full height Type-1 steel delineator post which is driven alongside a transition post. On vertical concrete faces, the ID markers are mounted using stainless drilled mechanical anchors from the QPL. Boilerplate *SP00842* "Facility Identification Markers" includes these mounting instructions for the contractor.

Each ID marker will be configured in accordance with the example and information below. Show this information in a table in the bridge plans (see MicroStation cell "T_BridgeID_Marker"). Standard Drawing *BR195* shows dimensions, text, colors and other requirements of the marker for inclusion in the contract plans.

Telephone number of the appropriate agency Dispatch Center
US or OR Route Number
State Highway Number
Milepoint Number
Bridge Number
Name of the Structure

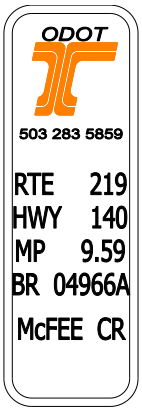

3.23 (RESERVED)

3.24 ACCELERATED BRIDGE CONSTRUCTION (ABC) GUIDELINES

Outline:

3.24.1 Introduction

3.24.2 ODOT encourages and supports ABC Projects

3.24.3 Contracting Methods Allowed

3.24.4 Decision Making Framework

3.24.5 ABC – Decision and Economic Modeling Analysis Tool using the Analytic Hierarchy Process (AHP)

3.24.6 Steel Structures

3.24.7 Concrete Structures

3.24.8 Full Depth Deck Panels, End Panels or Approaches and Wingwalls

3.24.9 Seismic Related

3.24.10 Use of Self-Propelled Modular Transporters (SPMT)

3.24.11 Geotechnical Consideration

3.24.12 Accelerated Embankment Construction

3.24.13 QA/QC, Quality Control for Prefabricated Concrete Elements

3.24.14 Cost Considerations

3.24.15 Listing of bridges replaced using ABC techniques

3.24.1 Introduction

Oregon has employed ABC methods to quickly deliver several bridge projects throughout the State. From the compiled list of 15 projects that had used ABC bridges to date, two-thirds of them were completed in the past five years. Depending on the types and locations of the bridges, several different techniques were used. Some of those bridges were assembled or erected on temporary falsework located adjacent to an existing structure using prefabricated elements and systems and skidded into place. This method allowed the contractors to close the facilities to vehicular traffic for a relatively short time (like over a few days or weekend) and skidded the bridge over after quickly demolishing the existing bridge at night and working throughout weekends. Other bridges over navigable waterways were replaced using barges to float new and whole superstructures into place, also known as switch-out with the old structure if one existed. For wider structures that can accommodate staged construction, precast concrete or concrete filled, steel grid deck panels were installed during partial closure of the roadway during off peak travel times.

A few of the Oregon ABC projects were designed with rapid construction in mind to limit traffic interruptions, but most were selected either based on VE proposals by contractors, incentive/disincentive provisions, or design-build contracts. Generally the project schedules specified a relatively short period window for closing or disrupting traffic operations on the facilities. The incentive/disincentive provision for each project was normally based on user delay costs as a function of ADT, detour length and other variables. Those projects have demonstrated ABC as effective and efficient solution to alleviate congestion and/or long detours where conventional methods such as off-site detour, on-site detour, stage construction or slight realignment of the roadway were difficult or not feasible. They resulted in improved public safety through the shortened work zone exposure and supported mobility.

3.24.2 ODOT encourages and supports ABC Projects

ABC methods can be defined as using prefabricated bridge elements, combining elements into systems, or moving a complete bridge span to quickly deliver a project and re-open the highway to traffic. Use of any of these methods are encouraged and supported by ODOT whenever it is efficient and cost effective. A compiled list of past Oregon projects that described the ABC featured elements is provided here at the end of the Section for reference.

Prefabricated elements consisting of deck panels, beams or girders, bent caps, pier columns and segments have been demonstrated successfully. Systems may consist of bridge components assembled and connected together to form a major portion or complete bridge span. Bridge movements such as incremental launching, skidding, and/or transport by self-propelled modular transporters (SPMT) of a partial/complete superstructure span are also found to be acceptable methods of construction. The guidance provided here below will help designers and owners decide when and where ABC is appropriate as a method of project delivery. Although the Engineer on Record is responsible for the design as well as for developing a unique method of construction/movement to fulfill the ABC requirements, the owner needs to be assured that the quality and durability of the bridge is not being compromised by the specific rapid construction technique being considered.

3.24.3 Contracting Methods Allowed

A contract for specifying ABC method of delivery is allowed and will continued to be allowed under the current design-bid-build specifications. A contractor may propose an alternate method of construction for approval by the EOR/owner as part of the Cost Reduction Proposal provisions in *Section 00140.70* of the Oregon Standard Specifications for Construction. The third option allowing ABC is provided under the design-build contract provisions. More discussions and guidance are provided elsewhere and will not be elaborated here.

3.24.4 Decision Making Framework

A successful ABC project is dependent on deciding correctly at the beginning of a project planning to assess when and where ABC would be most efficient and effective. The following criteria in the flowchart, *Figure 3.24.4*, for specifying a short window of closure may make ABC delivery the method of choice:

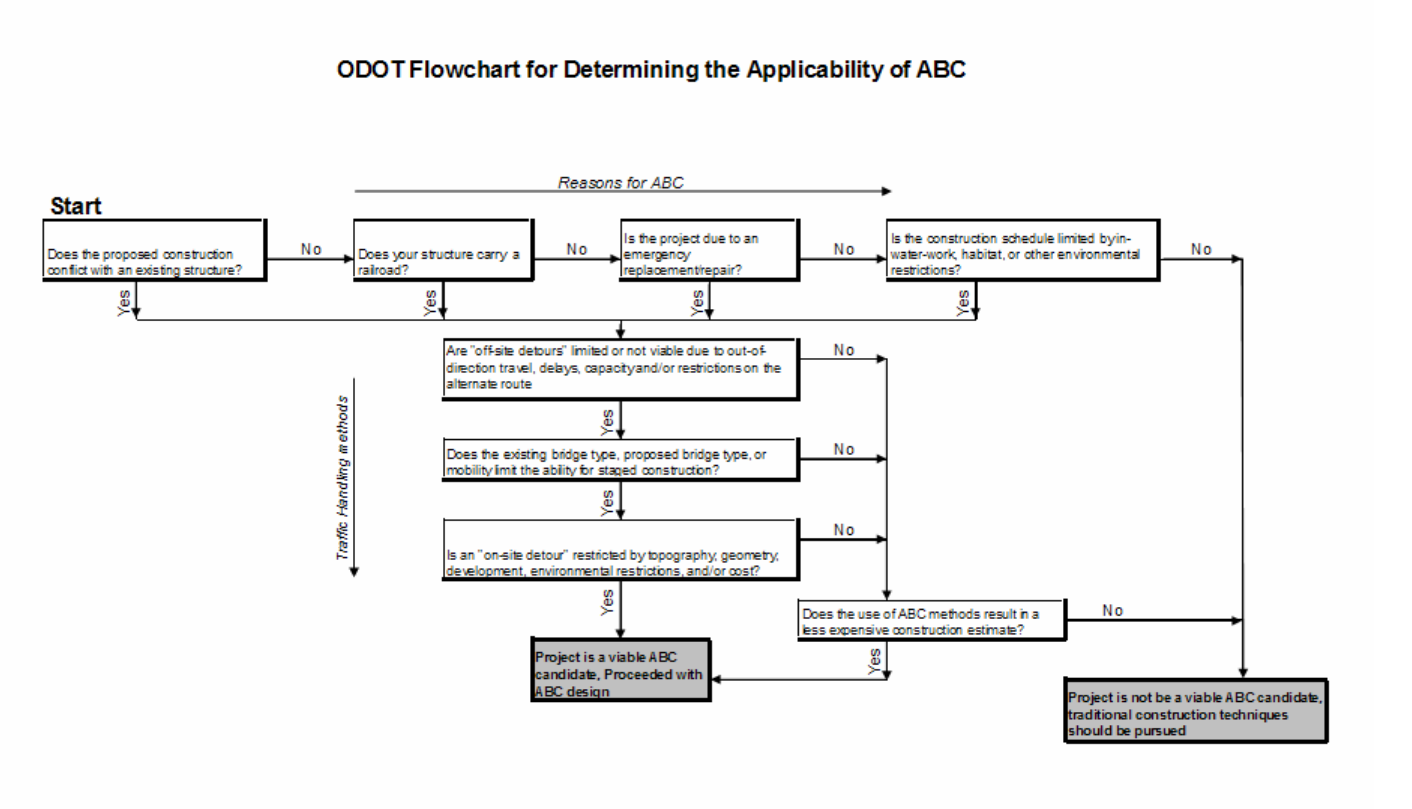

Figure 3.24.4

A following matrix format presents more discussions between selecting an ABC versus a conventional project for the various attributes:

ATTRIBUTES	Accelerated BC (ABC)	Conventional BC (CBC)
1. Complexity	-Engineer less familiar with design required for accelerated bridge construction techniques -May require more surveys to establish control points -May require pick points for prefabricated bridges -May require more complex construction techniques -May need new specs -May add risk to Contractor -May require special equipment -Good with D/B and A+B with incentive/disincentive	-Engineer more familiar with design required for conventional construction techniques; therefore, considered less complex. - Contractors more familiar with methods used in conventional construction, therefore considered less complex -Standard specs exists

ATTRIBUTES cont.	**Accelerated BC (ABC)** cont.	**Conventional BC (CBC)** cont.
2. Schedule	-Facility to reopen for traffic in hours or over weekends -Slightly longer design schedule due to complexity (see above) -Need more overall planning and coordination -Parallel construction off CPM -Typically can be done off-line and shorter field erection season, pending ABC method chosen. -Approach or utility work may control schedule if not outside CPM -Good with incentive/disincentive -Constructible connection details for precast elements such as bent caps, footings & pile heads require flexibility for field closure pours. -May require coordinated demolition plan for change-over structures -May require tight control of scheduling on critical items -The contract plan or designed details should be simple or the precast element detail may not fit. -May require industry participation in PBES/ABC to ensure successful transition to field application. -Include contractor on design or constructability review team.	- Typical field construction season in months or years -Typical design schedule -Often bridge work is controlling in CPM -Sequential activities typical and limitations may exist -Public delay cost may be high
3. Budget	-May be more expensive in construction cost due to non-typical construction methods -May increase design cost -Limited historical bid item data -ABC can significantly reduce the costs to highway users associated with traffic queues and detours during the bridge installation. -The contract bid cost for an ABC project may be more than a conventional bridge project but overall may be much less when the savings due to reduced traffic impacts and delays are factored in.	-Typical estimate given condition and conventional required structure type. -Typical standard project costs. -Incentives and disincentives may be included to accelerate construction and reduce traffic impacts but they may not be effective and could adversely impact project costs. -Careful analysis is needed to effectively apply incentive/disincentive methods to accelerate bridge projects.
4. Design Quality	-Design quality could be just as good as that of conventional -Limited design criteria for some elements -Construction loads may control design and need check -Require to show full connection details	-Design quality is expected to be good from standard and best practice.

ATTRIBUTES cont.	**Accelerated BC (ABC)** cont.	**Conventional BC (CBC)** cont.
5. Construction Quality	-Individual prefabricated elements are of higher quality under shop-controlled environment. -Construction quality could suffer in the field assembly due to time pressure.	-Construction quality depends on the contractor and inspection staff.
6. Disciplines required	-May require more upfront coordination between technical and non-technical disciplines and public relations.	-Standard project design and construction teams
7. Experience needed	-ABC experience is desirable especially regarding knowledge of ABC construction methods, new technologies and implementation of new design and details. -Additional research effort and resources may be required. -May require specialty construction experience.	-Standard project design experience. - Standard bridge construction experience.
8.Public Communications	-May require more early and upfront communication with the public for temp/short road closures -May need to develop a communication plan with stakeholders	- Typical
9. Demolition of existing structure	-Require full demolition plan -May need to provide staging place near site for off-line demolition -Coordination for change-over structures -May not require temporary structure to be in place for long duration	-Typical construction with either road closure or requires staging -Require full design of temporary structures for longer duration in place
10. Quality Control	-ABC elements should be verifiable during construction -May require constructability review	-Typical
11. Owner Staff	-Some additional effort may be expected of the owner staff in design or review of non-conventional details/procedures. Also may require more staff in a much more condensed timeframe.	-Standard

3.24.5 ABC – Decision and Economic Modeling Analysis Tool using the Analytic Hierarchy Process (AHP)

ODOT has created a new tool for assisting project decision makers and it is named “ABC AHP Decision Making Program”. This program allows the project team to analyze the various applicable and weighted criteria in a paired-wise comparison. With the input provided either by the designer or the project team, it would capture the decision based on the controlling criteria and computed utility value for each of the criteria.

We encourage all project designers and/or leaders to take advantage of this useful tool as part of their decision making process to determine whether ABC is preferred over conventional construction. This program may be used with the input provided by the bridge engineer alone if he or she has all the available information and feels comfortable to determine the relative importance between any two given criteria. When a project is complex and involves issues or concerns by other disciplines, it would be appropriate for the project team to provide the input and thus build consensus in their decision making

process. The input can be collected with a survey form or entered directly into the program data fields either during or sometime after the first project kick-off meeting when more information become available for them to better gauge the relative importance between any given paired criteria or sub-criteria.

3.24.5.1 Instructions for using the "ABC AHP Decision Making Program":

The AHP Program (in short) must be first loaded onto a personal desktop or laptop computer and must include the "dotNetFx40_Full_x86_x64.exe". It is recommended the AHP Program be copied into a separate folder. It is assumed one is familiar through reading the manual (included in the CD folder) or attended the training. In summary, here are the logical steps to get started in running the program:

1. Individual or team to establish the applicable criteria and sub-criteria for ABC decision. Refer to *Figure 3.24.5.2* and mark the ones that apply to the specific project in question. Reminder: Always save your work.
2. Optional step: Use the survey form to assign the relative value for each paired-wise criteria comparison OR skip to next step.
3. Run the Program by clicking on "AHPTool.exe" file. This will open the program under Tab 1 (Decision Hierarchy) and de-select the non-applicable criteria and sub-criteria determined in Step 1. User can add a new criterion or remove one from the default by using the "add child" or "remove" button on the right.
4. Then click on Tab 2 (Pairwise Comparison) and enter the relative values from Step 2. Reminder: Always save your entries.
5. Click on Tab 3 (Results)
6. To use Tab 4, please read and follow instructions in the Manual.

3.24.5.2 Established Criteria and Sub-criteria for ABC decision

See *Figure 3.24.5.2*. Generally speaking, most transportation project decision making require some criteria that are important and specific to each site. Five main level criteria have been established and they seem to be the standard criteria used by several states for decision with ABC projects. Within each main level criterion is further defined by a sub-criterion that further expands to differentiate its elements. The definitions for each criterion are provided in Table 1 below.

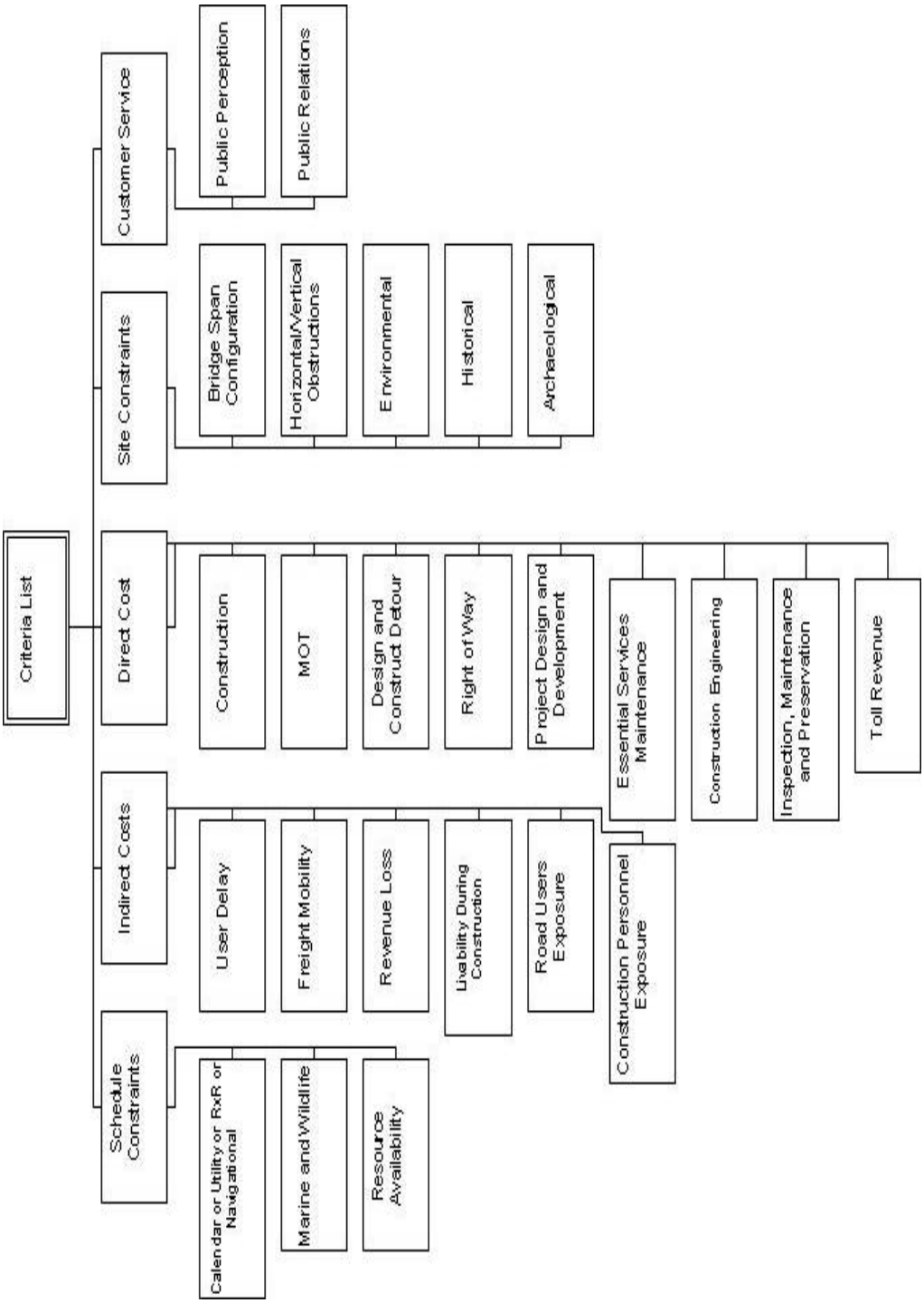

Fig. 3.24.5.2 – Main and Sub-Criteria for ABC Decision

Table 1 – Definition list of Main criteria and sub-criteria

Main criteria	Sub-criteria	Definition
Direct Costs	Construction	This factor captures the estimated costs associated with the construction of the permanent structure(s) and roadway. This factor includes premiums associated with new technologies or innovative construction methods. Premiums might result from factors such as contractor availability, materials availability, and contractor risk. It may include incentive/bonus payments for early completion and other innovative contracting methods.
	Maintenance of Traffic (MOT)	This factor captures the maintenance of traffic costs at the project site. MOT costs may impact preference due to its impact on total costs. This factor includes all costs associated with the maintenance of detours before, during, and after construction. Examples of this factor include; Installation of traffic control devices, maintenance of detour during construction including flagging, shifting of traffic control devices during staged construction, restoration associated with the temporary detours upon completion of construction.
	Design and Construct Detours	This factor captures the costs to design and construct temporary structures and roadways to accommodate traffic through the project site.
	Right of Way (ROW)	This factor captures the cost to procure ROW. This factor includes either permanent or temporary procurements/easements.
	Project Design and Development	This factor captures the costs associated with the design of permanent bridge(s) and costs related to project development based on the construction method.
	Maintenance of Essential Services	This factor captures the costs associated with the need to provide essential services that may be impacted by the construction selected. Examples of this factor include alternate routes or modes of transportation to provide defense, evacuation, emergency access to hospitals, schools, fire station, and law enforcement, etc. This criterion is for situations where measures needed to be implemented beyond those already considered in the “MOT” and “Design and Construct Detours” criteria.
	Construction Engineering	This factor captures the costs associated with the owner’s contract administration of the project.
	Inspection, Maintenance and Preservation	This factor captures the life cycle costs associated with the inspection, maintenance and preservation of individual bridge elements.
	Toll Revenue	This factor captures the loss of revenue due to the closure of a toll facility.

Main criteria ct	**Sub-criteria** cont.	**Definition** cont.
Indirect Costs	User Delay	This factor captures costs of user delay at a project site due to reduced speeds and/or off-site detour routes.
	Freight Mobility	This factor captures costs of freight delay at a project site due to reduced speeds and/or off-site detour routes.
	Revenue Loss	This factor captures lost revenues due to limited access to local business resulting from limited or more difficult access stemming from the construction activity.
	Livability During Construction	This factor captures the impact to the communities resulting from construction activities. Examples include noise, air quality, and limited access.
	Road Users Exposure	This factor captures the safety risks associated with user exposure to the construction zone.
	Construction Personnel Exposure	This factor captures the safety risks associated with worker exposure to construction zone.
Schedule Constraints	Calendar or Utility or RxR or Navigational	This factor captures the constraints placed on the project that might affect the timing of construction as a result of weather windows, significant or special events, railroad, or navigational channels.
	Marine and Wildlife	This factor captures the constraints placed on the project by resource agencies to comply with marine or wildlife regulations. Examples include in-water work windows, migratory windows, and nesting requirements.
	Resource Availability	This factor captures resource constraints associated with the availability of staff to design and oversee construction. For example, a state may be required to outsource a project, which may result in additional time requirements.
Site Constraints	Bridge Span Configurations	This factor captures constraints related to bridge span configurations. This element may impact owner preference regarding bridge layout, structure type, or aesthetics.
	Horizontal/Vertical Obstructions	This factor captures physical constraints that may impact construction alternatives. Examples include bridges next to fixed objects such as tunnels, ROW limitations, sharp curves or steep grades, or other urban area structures that constrain methods and/or bridge locations.
	Environmental	This factor captures the constraints placed on the project by resource agencies to minimize construction impacts on natural resources including marine, wildlife, and flora.
	Historical	This factor captures historical constraints existing on a project site.
	Archaeological Constraints	This factor captures archaeological constraints existing on a project site.
Main criteria ct	**Sub-criteria** cont.	**Definition** cont.
Customer Service	Public Perception	This factor captures both the public's opinion regarding the construction progress and their overall level of satisfaction.
	Public Relations	This factor captures the costs associated with the communication and management of public relations before and during construction.

3.24.6 Steel Structures

Steel structures are excellent examples of prefabricated bridge elements and systems. They are proven to be cost effective and sustainable for ABC methods. The steel girders are prefabricated and primed coated as needed in the shop and shipped to the job site. A short closure of the affected highway facility may be required to erect them. Several complete arches and trusses have been erected successfully on barges and floated into place.

Bridges built with plate girders (straight or curved) can accommodate precast concrete panels or steel grid deck systems for rapid construction. Some connection details can be found at:

www.fhwa.dot.gov/bridge/prefab/

3.24.7 Concrete Structures

3.24.7.1 Prestressed and Precast Concrete (PPC) versus Cast-In-Place (CIP)

PPC bridge elements can be mass produced in PCI-certified plant under factory-controlled conditions to ensure high quality and consistency, thus making them more reliable and durable. The products can also be transported to the jobsite for just in time delivery to meet erection schedules, thus avoiding re-handling or the need for storage space that might be difficult to provide in urban areas. Traffic impact at the project site can be minimized and erection can normally be done during off peak hours.

In Oregon, construction cost for PPC girders has been lower than for CIP girders. Unless there is a compelling reason like curvature, aesthetics, and longer span requirements, PPC girders are preferred. There is an economy of scale for larger projects requiring repetition of similar spans. For elements other than girders, there is an opportunity to develop effective standard elements for connecting them into bridge systems. In the erection of PPC elements, proven connection details are critical for long term performance. ODOT will be looking at collecting and refining these details in the near future. The FHWA has developed a manual on proven connection details routinely used by others and the publication will be available in the near future. See:

www.fhwa.dot.gov/bridge/prefab/

3.24.8 Full Depth Deck Panels, End Panels or Approaches and Wingwalls

Full depth deck panels have been in practice and continue to be widely used by many states. Connection details for both steel and concrete girder exist. The NCHRP 12-65 study is looking at a new deck system with connection details using conventional reinforced or prestressed technology. More details will be available in the future.

ODOT has existing standards for end panels/approaches and wingwalls that can be readily converted into ABC.

Precast End Panels

- Consider issues regarding subgrade compaction and the contractors' ability to construct the surface of the subgrade to a smooth level condition prior to placement.
- Consider the ability of precast panels to accommodate differential settlement (especially if subgrade is not level)
- Consider the design of the connection detail to pile cap/abutment wall and any joint construction.

3.24.9 Seismic Related

Assembling prefabricated bridge elements on site, one method of ABC requires a very detailed assembly plan and connection details. Whereas for single span bridges this is not very complicated, designing and detailing of connections for multi-span bridges has to be treated with the same importance as designing the rest of the structure.

Submit new connection proposals for approval to ODOT Bridge HQ. This requirement is intended to ensure information about good connection details are subsequently distributed to other design groups. From the owner's perspective, Oregon DOT has been proactive on researching and participating on several studies and tests of several types of connections. The main focus of this research has been toward the superstructure-to-substructure connections such as pile-to-pile cap connection, bent cap-to-column connection, beam-to-bent cap connection, precast deck-to-girder connection, etc. For low-to-moderate seismic hazard a few good connections applicable for single span bridges and multi-span bridges have been identified. For areas with high seismic hazard, the research and study of connection details for ABC applications is an ongoing process. The NCHRP 12-74 research project "Development of Precast Bent Cap Systems for Seismic Regions" identifies a number of bent cap-to-column details that hold promise for seismic applications. ODOT is willing to implement a few of these details only for bridges in low-to-moderate seismic regions (Seismic Design Category "A", "B", and "C"):

a) Grouted Duct – Grouted duct connections consist of bent caps which have corrugated ducts to accept reinforcement extending from supporting substructure elements.

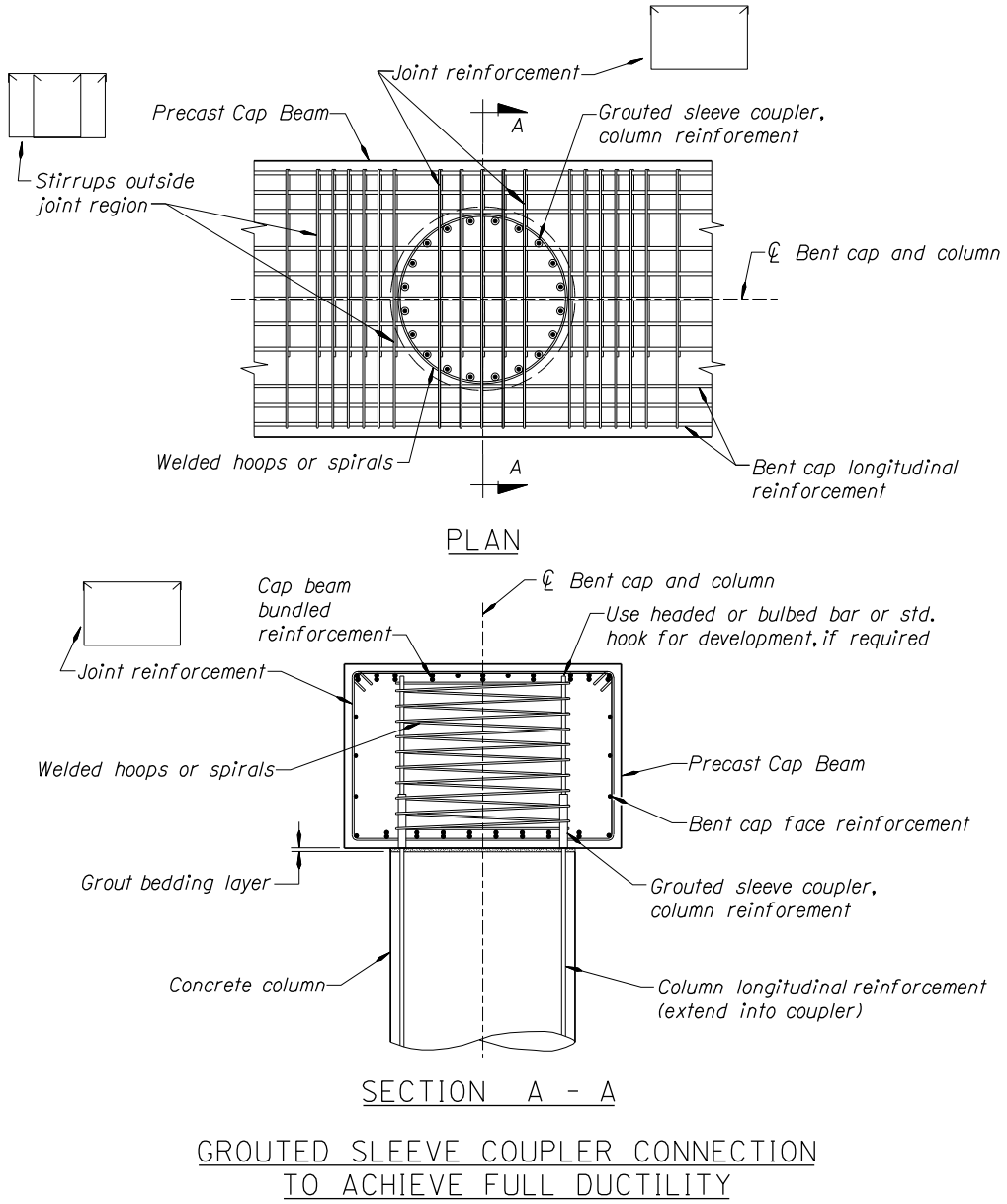

GROUTED SLEEVE COUPLER CONNECTION
TO ACHIEVE FULL DUCTILITY

Figure 3.24.9A

b) Grouted Sleeve Coupler (Coupler in Cap) – Proprietary grouted sleeve couplers are used to connect reinforcing bars in precast concrete components. These couplers are placed in the bottom-half of the precast bent cap and are designed to withstand forces at overstrength as is often required in plastic regions.

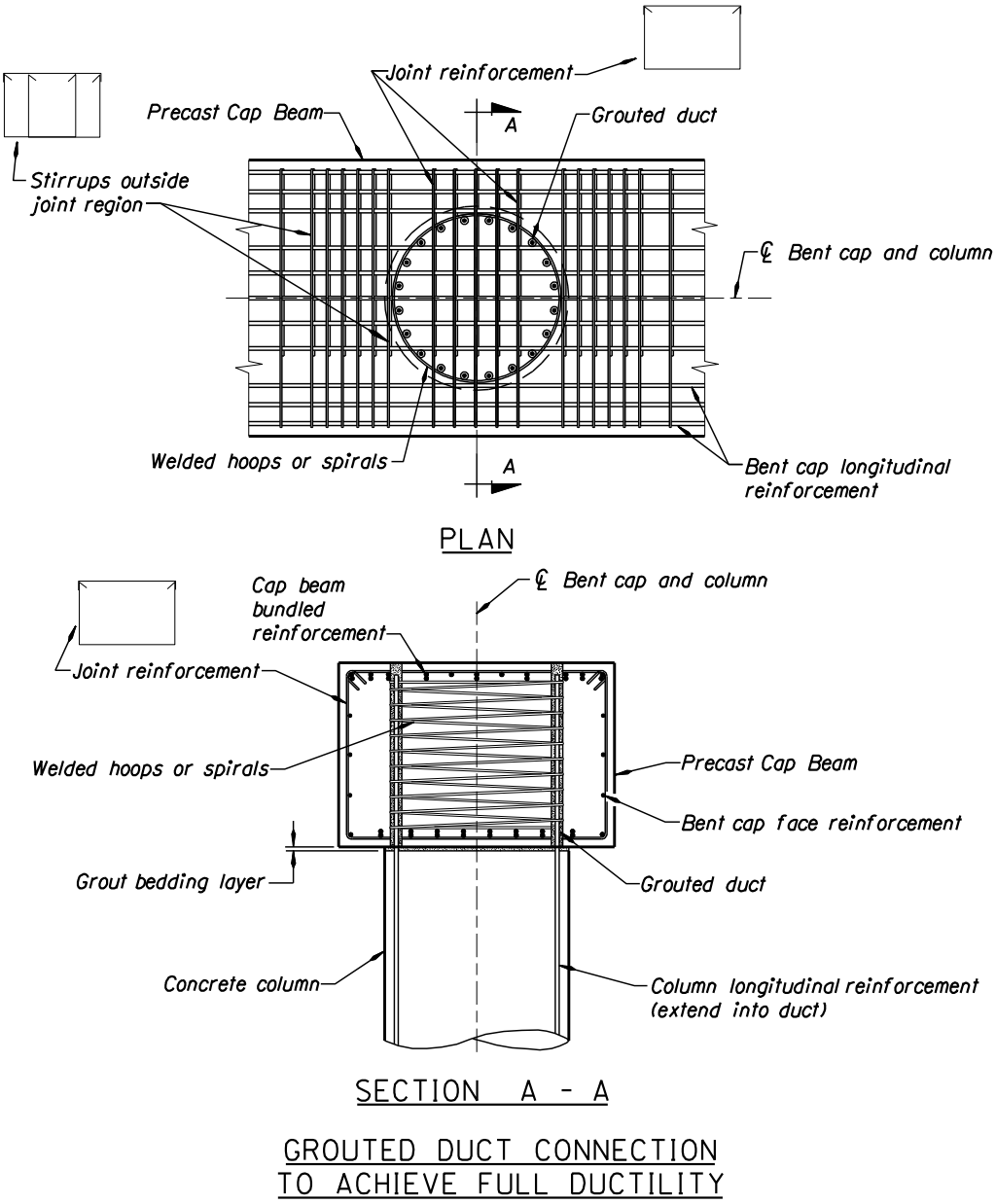

Figure 3.24.9B

Other research related to seismic connection details under NCHRP Projects are being proposed and considered and more guidance would become available in the near future.

3.24.10 Use of Self-Propelled Modular Transporters (SPMT)

SPMT, a new heavy equipment technology brought back from and promoted by the FHWA/AASHTO Scanning Team is becoming popular. The SPMT can support and move heavy loads with its flat-bed mounted on multi-axle, independent suspension and steering wheel lines. They have the ability to maneuver in difficult and uneven terrain with unmatched precision and distortion control of its payload.

Several projects have demonstrated successfully the use of SPMT for moving complete superstructure spans that were prefabricated at a staging area (e.g. gore area or off the shoulders) near the final bridge location and off the travel lanes. The bridge movement was generally done on weekends or night time using the SPMT to erect the structure into their final position within a matter of hours. FHWA has published a user guide manual and it is recommended as a resource document for anyone contemplating to do an ABC project using the SPMT. The guide is available to the public free of charge at:

http://www.fhwa.dot.gov/bridge/pubs/07022/

3.24.11 Geotechnical Consideration

The foundation designer should consult closely with the bridge designer and the project team regarding the use of ABC methods at a particular bridge site and coordinate these efforts as necessary during the bridge design process.

Usually driven piling is the most rapidly constructed foundation type but piles are not always suitable at every location for meeting specific bridge design requirements. The most suitable foundation type for a bridge replacement or widening project depends on several factors including the subsurface materials and conditions, construction or environmental constraints and cost. Refer to the ODOT GDM; Chapter 8 for additional guidance regarding the selection of foundation types. Once the most suitable foundation type is selected for a site, thought should be given to how the foundation construction can be expedited. This should include how to minimize traffic impacts due to foundation construction. At some locations the foundations (and substructure elements) may be constructed under, or away from, the existing bridge thereby avoiding, or minimizing, any traffic impacts. If this scenario is possible, then the time required for foundation construction may be less significant because it does not directly affect traffic. At sites where foundation construction will directly impact traffic and multiple foundation types are possible, consideration should be given to the foundation system that can be constructed in the least amount of time and with the least impact to traffic. Some general guidance regarding the use of various foundation systems in ABC applications are described below.

3.24.11.1 Spread Footings

Conventional Spread Footings

- Requires excavation to suitable foundation materials which may result in the need for large excavation areas and/or temporary shoring and possibly dewatering.
- Requires setting rebar, a concrete pour and curing time (and form work, if needed).

Precast Reinforced Concrete Spread Footings

This type of ABC foundation system is currently under development and design and construction standards and specifications do not currently exist. This type of foundation may be considered at sites where conventional spread footings would be appropriate, however, precast spread footings (PSF) are currently recommended only for shorter, single span bridges at this time. Issues to consider in the application of precast spread footings would include:

- Need for construction of a concrete footing leveling slab beneath the precast footing (excavation/shoring, sloping bearing strata, presence of groundwater, etc.),
- Design of the connection between PSF and leveling slab,
- Design of the connection between the PSF and columns or abutment walls,
- Constructability issues when placing PSF directly on compacted soils,
- LRFD resistance factors for bearing and sliding resistance based on construction method, and settlement analysis.

3.24.11.2 Driven Piles

Often the quickest foundation construction method and can generally have the least impact and disruption to traffic.

- Consider using fewer, higher capacity, piles per bent to expedite construction, however:
  - Using higher capacity piles may result in significantly higher foundation costs due to the need for larger pile driving hammers, leads and cranes and possible effects on the cost of work bridges due to these higher loads.
  - Using less than 5 piles per bent may result in a reduced LRFD resistance factor due to less redundancy.
  - May be most appropriate for sites with relatively short end bearing piles.

- Requires assessment of pile top alignment tolerances for precast pile cap connection:
  - Standard specifications (*Section 00520.41(f)*) allow for a horizontal alignment tolerance of 6 inches from the plan location. If a smaller tolerance is required then this reduced tolerance must be specified in the special provisions. Consult with the project geotechnical engineer regarding allowable horizontal tolerances for driven piles.
  - Should piles be installed in prebored holes to meet the specified tolerances? However, keep in mind the final pile alignment is only as good as the prebore hole alignment. In soils where large cobbles and/or boulders are present, or where preboring will encounter a bedrock unit with a sloping surface, prebored holes should not be augered but instead excavated using core drilling equipment. Augers tend to wander uncontrollably in these materials and borehole alignment is very difficult to maintain.
  - Consider the time and cost of preborings.
  - Consider the risk of not preboring (possibly include preboring as an anticipated item).

- Minimize the potential for in-lead splices, particularly on pile with a wall thickness of greater than 0.50 inches such that extensive welding and welding QA/QC is not required.

- Increasing estimated lengths in variable subsurface conditions will help reduce the likelihood of an in-lead splice for pile shorter than 60 feet. For longer pile consider specifying that the pile be fabricated (spliced) on site prior to putting in the leads, taking into account the cost of using larger size leads and cranes and other concerns similar to those discussed above when using fewer high capacity pile.

- Piles can be installed in existing travel lanes, in stages under traffic control, and covered over with temporary steel cover plates to keep travel lanes open to traffic until the time for substructure construction.

- At water crossings consider a trestle pile design which eliminates the need for a cofferdam (if an above ground pile cap is permissible). The potential for drift buildup should be assessed relative to the use of a trestle pile system. A web wall may be required if drift potential is significant.

3.24.11.3 Drilled Shafts

- Usually take the most time to construct, however drilled shafts are often the best method for rapid in-water foundation construction, since they may omit the need for a cofferdam (unless required for environmental considerations).

- Consider fewer, higher capacity, shafts per bent, (*note that appropriate modifications to LRFD resistance factors are required for bents with less than 2 shafts*).

- Higher potential for increased risk of time delays due to problems with shaft construction or negative NDT results.

3.24.11.4 Micropiles

- Usually more expensive than the other foundation types.

- Suitable for certain ground conditions, particularly manmade unconsolidated rock fragment fills and low overhead clearance areas.

- May be installed to tight tolerances and drilled through pavement sections.

- Consider environmental concerns relative to spoils recovery since water is typically used to flush out cuttings.

3.24.12 Accelerated Embankment Construction

The time required for embankment construction, (either an all new roadway embankment or a widening section) depends primarily on the volume of material required, the type of embankment materials used, the level of contractor effort and the subsurface conditions at the site. Other factors such as access, retaining wall construction and weather can also play a role and affect the speed at which an embankment can be constructed. Embankment construction may be accelerated in a number of ways, however in areas where very soft ground conditions exist, and there is potential for significant settlement and stability issues, consideration should be given to extending the bridge structure over these areas. This may result in a better overall design with less environmental impacts and a shorter construction period.

For ABC projects, the geotechnical engineer should evaluate the site conditions and project requirements to determine the most effective way of expediting embankment construction with the least impact to traffic flow and mobility. Refer to ODOT GDM; Chapter 9 for more design guidance on the analysis and design of embankments. ABC projects often replace bridges in the same location (same horizontal alignment) as the existing bridge, except the new bridge is usually wider and therefore the approach embankments need to be widened. The grade may also be raised resulting in a further increase in embankment widening. Depending on the site constraints (available access/ROW, adjacent structures, wetlands, etc) this widening can often be accomplished with minimal traffic impacts. However, the geotechnical engineer should play a key role in the design of these widened sections to help determine the best approach for expediting the construction while taking all appropriate geotechnical design requirements into account.

The need for retaining walls on a project should be carefully reviewed. Typically an embankment can be constructed much quicker than a retaining wall. Retaining wall needs are typically driven by roadway "typical section" needs that may not have been optimized to reduce the need for retaining walls. For example, the slope immediately behind a guardrail could be steepened from the typical 1V:3H or 1V:4H to steeper slopes if longer (8') guardrail posts are used rather than the typical 6 foot post lengths. Often typical fill slope rates of 1V:2H are considered in typical sections rather than steeper slopes which may omit or reduce the need for a wall. The use of stone embankment material to construct 1V:1.5H fill slopes, and using 8 foot metal guardrail posts to assist in penetrating the stone embankment material, has been used successfully on several projects.

Retaining walls may be proposed in some areas to avoid, or minimize, environmental impacts. However, the need for walls in these areas should be closely evaluated, in consultation with the appropriate environmental specialists, to determine the underlying reasons for requiring a wall and whether or not it is the best solution for the specific location.

Some suggested considerations for embankment construction on ABC projects are summarized below:

- Use "All-Weather Materials" (stone embankment) instead of common "borrow" materials where available and appropriate. This allows construction to rapidly proceed regardless of wet weather conditions and can greatly reduce the total embankment construction time.

- Soft Ground Conditions (settlement and stability issues)
  - Lightweight fill material such as geofoam applications
  - Geogrid reinforced embankments
  - Ground improvement techniques
  - Surcharge, with or without vertical wick drains

3.24.13 QA/QC, Quality Control for Prefabricated Concrete Elements

3.24.13.1 Types

ODOT has used a variety of prefabricated concrete elements on many projects. Prestressed concrete elements have been used since the 1960s. Use of non-prestressed prefabricated concrete elements dates back even earlier. The types of prefabricated concrete elements used on ODOT projects have included:

- Prestressed slabs and box beams
- Prestressed girders
- Prestressed columns
- Prestressed arch ribs
- Prestressed piles
- Bridge railing
- Bridge end panels
- Pile caps/abutments
- Stay-in-place deck forms
- Culverts
- Manholes and utility vaults

3.24.13.2 Prestressed Elements

When precast concrete elements include prestressing, *Section 00550* of the standard specifications apply. 00550.05 requires fabricators to be certified under the PCI Plant Certification Program. PCI certification ensures that industry best practices are followed. The member tolerances specified in

00550.04 are those recommended by PCI.

For non-standard prestressed concrete elements, the existing *Section 00550* Oregon Standard Specifications for Construction will likely be adequate without modification. However, the designer may need to create a unique bid item since the available bid items only cover our current standards.

Designers should verify details with local precasters (Knife River and/or R.B. Johnson Co.) before design plans are final. The ODOT Structural Materials Engineer should also be consulted to verify whether standard inspection procedures are adequate.

3.24.13.3 Non-Prestressed Elements

Precast concrete elements that are not prestressed should be specified under Section 00540. Since there is not a nationally recognized certification program for non-prestressed elements, the designer will need to determine some minimum qualifications for fabricators. Minimum qualifications may include:

- Submission of a Quality Control Plan
- Names and qualifications of key personnel
- History of similar projects
- Procedure for tracking material certifications

The nature and complexity of the project will determine which items above should be included in the minimum contractor qualifications. Solicit input from the ODOT Bridge Materials Engineer before finalizing any contract special provisions.

In addition to project qualifications, it may be desirable to also require the contractor to identify the form material and forming details. Lifting and shipping details may also be required. For unique lifting and shipping situations and/or large elements, it may be necessary to require verification of lifting and shipping details. Such verification could be achieved with review by a professional engineer or by testing. Especially where there is potential for items to be fabricated by a contractor with little or no experience with precasting concrete, the special provisions should include language that ensures safe and adequate lifting and transport details. In some cases, it may be desirable to add lifting and shipping verification as part of the contractor's Quality Control Plan.

Where precast concrete elements are specified under Section 00540, the designer will need to write a special provision to address measurement and payment. Most structural concrete is paid on a cubic yard basis. However, precast concrete elements should be paid either on a per length basis or per each.

Standard fabrication tolerances for structural concrete are provided in *Section 00540.40*. These tolerances are based on typical cast-in-place concrete construction. For precast elements tighter tolerances may be achievable and desirable. Consult with the ODOT Bridge Materials Engineer to determine reasonable tolerances for your specific application.

Inspection of precast concrete elements will be required both during the precasting operation and during placement in the field. The ODOT Bridge Materials Engineer is responsible for inspection of precast elements and should be notified when precast concrete elements are to be used. This will help ensure ODOT staff is scheduled to be available for such inspections and whether any adjustment to the ODOT Nonfield-Tested Materials Acceptance Guide is needed.

3.24.13.4 Connection Issues

Current state-of-the art does not support connection of precast cap elements in high seismic locations. This is currently being researched at the national level.

Connection of precast elements may involve the use of grout pockets to emulate cast-in-place construction. Where grout pockets are used, manufacturer's recommendations should be followed

regarding when grout should be extended with aggregate. For many grout products, aggregate is recommended when the pocket size reaches 2 inches or more.

3.24.14 Cost Considerations

It has been determined by numerous projects nationally that accelerating a project delivery will reduce the costs to highway users associated with traffic queues and detours during the bridge installation. Utah DOT has demonstrated that ABC can be successful and the initial costs of innovation are absorbed on the first few projects when there is some assurance that more projects using the same technology are being planned for the near future. The use of ABC should be justified on a specific project by analyzing the user cost savings compared to the estimated cost of various methods of rapid construction (see HYRISK discussion below).

ODOT has posted a Work Zone Traffic Analysis Tool that considers such topics as traffic delays and operations, and long detours. Guidance on Incentive/Disincentive Program for designers is also available. See:

http://www.oregon.gov/ODOT/HWY/ESTIMATING/id_program.shtml

3.24.14.1 Incentive/Disincentive Program

Requirements related to reduced traffic impact and time must be clearly specified in the contract documents. Innovative contracting strategies to achieve accelerated construction include incentive/disincentive, a financial bonus or penalty for delivery before or after a time set in the contract; A+B bidding, cost-plus-time based on the combination of contract bid items (A) and the time bid for construction multiplied by daily user cost (B); lane rentals, assessed rental fees for lanes taken out of service during temporary lane closures for construction; and no-excuse bonus, a modified incentive with no time adjustment for problems such as delays due to weather or utility conflicts regardless of who is responsible.

Incentives and disincentives for early completion give contractors a financial reason to change their conventional practices to accelerate construction. Contractors cannot count on incentives and, therefore, may not reduce their bid price in anticipation of receiving incentives. Disincentives are necessary but may result in higher bid prices because of the risk to contractors that they will not be able to meet the reduced construction timeline. However, in some accelerated bridge project case studies, it was found that by providing the right incentive/disincentive, the contractors were able to lower the overall total project costs when compared to conventional delivery methods.

3.24.14.2 Maintenance of Traffic Costs

Traffic management and user delay-related costs associated with bridge construction activities will significantly influence the selection of the most cost-effective bridge technology.

Elaborate traffic control plans can significantly add to the cost of the replacement, especially when the traffic control plan changes significantly during the project due to development, local expansion, or other projects in the area. Cost savings from the reduced duration of the traffic control plan through the use of ABC method of delivery can be estimated based on the reduced number of days of traffic control cost times the average daily operating cost of such measures for comparable bridge projects.

3.24.14.3 Contractor's Operation Costs

In general, contractors bid projects with the plan to complete onsite construction as quickly as possible to increase profits; this is particularly true for projects with incentives for early completion. The contractor's costs, including overhead costs to staff projects with construction crews, etc., are reduced when the duration of the construction project is reduced. Also, construction crew safety in the work zone is

increased with reduced exposure times related to the construction duration.

3.24.14.4 Owner Agency's Operation Costs

Agency overhead costs to staff projects, e.g., construction engineering and inspection support, are reduced when the duration of construction projects is reduced. Prefabricated bridges, with their rapid onsite installation, can significantly reduce these project costs.

The use of prefabricated bridges to accelerate construction cannot be approached in a conventional manner by the owner. The owner will need to commit to working multiple shifts, odd hours, and under the same constraints as the contractor.

The manufacturers of the prefabricated components may be able to offer lower unit costs if they can spread their fixed costs over many bridges and/or reuse the formwork repeatedly. The bundling of projects will provide an attractive incentive for a contractor to acquire new or special equipment when he can recoup his investment without pricing his bid out of the market.

3.24.14.5 Available Tool: HYRISK

How much will it cost highway users if a bridge is closed or detoured? The bridge with the longer detour would require additional time and mileage costs to negotiate the detour, and would incur the most cost to users. When considering the cost of the project, the cost of the construction of the bridge alone fails to capture the total cost of the project.

A method that blends the cost of the bridge construction and captures users economic losses associated with a bridge construction is discussed below using HYRISK algorithm to compute the economic impact to a community.

ADT and detour length are extracted from the NBI record for the bridge. The assumed 2008 cost per distance traveled was equal to $0.44/mi ($0.27/Km). It is assumed that the project would have one year duration of the detour.

Detour Mileage Cost (DMC) = Duration * Length Detour (L) * Cost/Length (CpL) *ADT Sample Bridge Project (Br # 00138)	
Duration of facility for construction (D) in days	365
Detour length (L) in km	26
Cost per Mile per Vehicle driven of detour length (CpL)/km	$0.27
Average Daily Traffic (ADT)	330
Time cost per person (TcP)/hr	$16.31
Occupancy rate (person) per vehicle (O)	1.56
Time cost per truck (TcT)/hr	$29.50
ADTT (Truck Traffic as a percentage of ADT; i.e. 10% this case)	.10
Speed of Traffic on Detour (DS) in km/hr	64
Detour Mileage Cost (DMC) = D*L*CpL*ADT	$845,600
Detour Time Cost (DTC) = D*L*[(O*TcP)*(1-ADTT)+(ADTT*TcT)]	$1.265 M
Total Community Cost associated with bridge closure $T1_{cost}$=DTC+DMC	$2.11 M

3.24.15 Listing of bridges replaced using ABC techniques:

- OR 38 over Elk Creek Bridges near Elkton – 2 steel plate girder bridges - Built on temporary falsework adjacent to the existing and skidded on tracks over during two weekend road closures (2008).
- OR 38 Bridge over Hardscrabble Creek, Douglas County - Built adjacent to the existing and skidded into place (2008).
- Kimberly Bridge OR19, Grant County – Rapid replacement of two approach spans using precast pile caps on a long structure with 20-day full road closure (2008).
- Depot Street Bridge over the Rogue River (Jackson County) – Concrete arch 306-foot span bridge built adjacent to existing and skidded over. Bridge was closed for 5 days total (2007).
- Sauvie Island Bridge (Multnomah County) over the Columbia River – 365-foot steel tied arch span. Used SPMT to skid and load bridge on barges and floated span into place (2007).
- OR 47 over Dairy Creek Overflow Bridge, Washington County - Use of steel pile cap and reused salvage precast, prestressed slabs. Open to traffic in 14 days (2007).
- US 20 Bridge over Hayes Creek, Eddyville, Lincoln County - used of precast cap and slabs, constructed during a 72-hour road closure (2006).
- Lewis & Clark Deck Replacement (with WSDOT lead) 120 nights (9:30 pm-5:30 am closure) and 4 weekends. Use of SPMT to replace superstructure 5478’ L X 34” W, 34 panels. WSDOT design 2004; conventional method - 4 years; or 6 month full closure (2004).
- Mill Creek Bridge Deck Replacement, OR26, Wasco County - 3-span continuous truss with deck panels replaced sequentially with partially concrete filled exodermic steel grid deck. 540-foot deck replaced in 24 days under flexible road closure schedule (2003).
- I-5 (Interstate) Bridge over the Columbia River, Portland – Accelerated the replacement of 2 trunnion assemblies and span/counterweight cables in the North End. $1.4+M incentive ($100K/day) was awarded the contractor for early completion in less than 7 days; 14 days ahead of the required 21-day schedule (1997).
- Imnaha Bridge over Little Sheep Creek – Single span, concrete-filled grid deck over steel curved girder bridge. Built first half of new bridge and switched traffic over; demolished existing bridge and built second half with some skidding to connect the two halves. Longitudinal concrete closure-pour in the middle (1997).
- Freemont Bridge over Willamette River, Portland. Arch span was floated on barges and moved into place using strands jacking (1973).
- Sam Jones Bridge - Full depth precast deck panels.
- OR 99E over Pudding River Bridge, Clackamas County – Erected new, longer and wider replacement steel truss adjacent to existing steel truss and skidded over (1940s).

APPENDIX – SECTION 3.3 – BRIDGE SCOPE MEMO

BRIDGE SCOPE MEMO	
STIP Cycle:	
Bridge Name:	
Bridge Number:	NHS: Yes / No
Region Scoping Reference Number:	
Final agreed to Field Scope:	
Class of Check (check one):	
	Class I: TS&L Narrative required
	Class II: TS&L Narrative required
	Class III: TS&L Memo acceptable
Complete:	
When TS&L Narrative is checked above, list at least three alternatives to be considered in the Alternatives Study:	
1.	
2.	
3.	
The above three alternatives must be included in the TS&L Narrative. More alternatives may be added and included in the Alternatives Study and TS&L Narrative by the Bridge Designer or Bridge Reviewer.	
Bridge Section Program Manager:	Bert Hartman

APPENDIX – SECTION 3.4 – ROLES & RESPONSIBILITIES

Outline:

A3.4.1 Bridge Designer

A3.4.2 Bridge Reviewer

A3.4.3 Bridge Checker

A3.4.4 Bridge Subject Matter Expert

A3.4.5 Bridge EDMS Specialist

A3.4.6 Bridge Quality Auditor

A3.4.1 Bridge Designer

The purpose of the Bridge Designer is to design, engineer and ensure the utmost in quality of the Bridge deliverables prepared for publication, contract, or construction.

At Project Initiation (at least two weeks prior to the 'kick-off' meeting):

- Meet with and discuss the goals and objectives of the project and the bridge design with the Reviewer.
- Review Bridge Scope Memo (problem, anticipated solution, TS&L Narrative required or TS&L Memo, alternatives to study).
- Review project schedule.
- Know who is the assigned Checker.
- Prepare to attend the project kick-off meeting.

After the Project Initiation (kick-off) Meeting (0% Preliminary Design Phase):

- Identify alternatives/options.
- Prepare table of Bridge Design Standards
- Vet out each alternative/option to point can make decision to keep or drop.
- Prepare preliminary calculations, as needed.
- Start TS&L Narrative or TS&L Memo, estimates, plan sheets, design deviations/exceptions.

At 50% Preliminary Phase (~50% TS&L development):

- Meet with Reviewer (if not already doing); review the status of the design and the progress of the Alternatives Study (Are the right alternatives/options being studied? Are there other alternatives/options that should be included?), TS&L Narrative or TS&L Memo, plan sheet(s), engineer's estimate, and design deviations/exceptions.
- For Bridge Program bridges, review Bridge Scoping Memo and ensure that the "problems/deficiencies" are actually getting addressed. (It is always easier to make corrections in the "path forward" when they are identified earlier than later!)

At 85% Preliminary Design Phase (95% TS&L development) thru DAP Milestone:

- Complete TS&L Report (TS&L Memo or Draft TS&L Narrative, plan sheet(s), and Engineer's Estimate @ TS&L, Bridge Design Standards Assessment, Design Deviations and Exceptions, and Alternatives Study) and submit to Reviewer for review.
- Receive written review comments from Reviewer. Prepare responses to review comments.
- Hold 'sit-down' with Reviewer and review responses to review comments. Reach consensus.
- Update TS&L Report.
- Complete Designer QC Form.
- Submit complete TS&L Report to Reviewer and Project Leader (for DAP).

After DAP is approved (0% Final Design) thru Progress/Preliminary Plans Milestone (50% Final Design):

- Start Final Design.
- Start Preliminary/Progress Plans package.
- Start Final Design calculations.
- Prepare Preliminary/Progress Plans plan sheets to a 50% level of completion. Show the basic geometry of all major elements; do not have to show all detail necessary for bidding and construction.
- Prepare Engineer's Estimate @ Preliminary/Progress Plans.
- Download SPLIST and identify applicable special provisions. (This is a good time to actually review the 100 sections, particularly SP110 and SP190. Understanding these sections can help complete quantities and other aspects of the package.)
- Submit Preliminary/Progress Plans package to Reviewer and Project Leader.
- Complete Designer QC Form.
- Start Advance Plans package.

After Progress/Preliminary Plans Milestone thru Advance Plans Milestone (90% Final Design):

- Continue preparing calculations.
- Prepare Advance Plans plan sheets to a 90% level of completion. Show all geometry and details necessary for bidding and construction.
- Prepare Engineer's Estimate @ Advance Plans.
- Prepare estimate of probable construction schedule.
- Prepare special provisions.
- Submit Advance Plans package to Reviewer, Checker and Project Leader.
- Complete remaining 10% of design; answer questions from Checker and Reviewer.
- Receive written review comments from Checker and Reviewer. Prepare responses to review comments.
- Hold 'sit-down' with Checker and Reviewer and review responses to review comments. Reach consensus.
- Update Advance Plans package.
- Submit complete Advance Plans package to Checker.
- Submit complete Advance Plans package to Reviewer and Project Leader.
- Complete Designer QC Form.

After Advance Plans Milestone thru Final Plans Milestone (100% Final Design):

- Complete calculations.
- Prepare Final Plans plan sheets to a 100% level of completion. Show all geometry and details necessary for bidding and construction.
- Prepare Engineer's Estimate @ Final Plans.
- Update estimate of probable construction schedule.
- Review special provisions package.
- Submit Final Plans package to Reviewer, Checker and Project Leader.
- Work with Checker, Reviewer and any others to resolve all review comments.
- Update Final Plans package.
- Submit complete Final Plans package to Checker.
- Submit complete Final Plans package to Reviewer and Project Leader.
- Complete Designer QC Form.
- Work with Reviewer to ensure all Bridge-related PD-02 Final PS&E Submittal Checklist requirements are complete.
- Work with Project Leader to ensure all PS&E package bridge deliverables are complete.

After Final Plans Milestone thru PS&E Package Milestone:

- Complete Calculation Books to this point in time, pdf, and send pdf to Reviewer. (Keep original for use through construction.)
- Complete load rating.
- Work with Reviewer to ensure all bridge deliverables and Bridge Quality Documentation is complete.

After PS&E Package Milestone:
- Work with Project Leader to complete any bidding RFIs and Addenda Letters.
- Complete Cost Data information.
- Complete Bridge Inventory Forms.
- Provide Construction Support.

A3.4.2 Bridge Reviewer

[Internal] = Internal to ODOT
[External] = External to ODOT; eg, A&E Consultant

The following duties are relevant to a Bridge Reviewer employed by ODOT [Internal]. For external Bridge Reviewer duties see the approved A&E Design Quality Plan for the specific project.

The purpose of the Bridge Reviewer is to review and ensure the utmost in quality of the Bridge deliverables prepared for publication, contract, or construction. The Reviewer shall have a background in bridge design commensurate to the work being reviewed.
Also, ODOT Reviewers should understand the different contracting methods for design and construction. They should understand Federal Aid, Federal participation, and Federal funding vs. State funding . They should understand "color of money" (funding) and how it affects the rules, regulations, and deliverables associated with the different contracting methods.

Throughout all design phases:
- Mentor bridge designers and checkers.

At Resource Planning Milestone [Internal only]:
- Review all STIP and Non-STIP projects for bridge work.
- Review pre- 'Project Initiation' project schedules (year, start, finish) for all STIP projects with bridge work.
- Review Bridge Scope Memo for the anticipated type of bridge work/design. (If no Scope Memo (eg, a bridge through a program other than the Bridge Program), meet with Project Leader and Area Manager to discuss the nature of the structures work. Inform them that the purpose of this meeting is to better understand the work so the appropriate 'level of experience' can be made, and the Designer and Checker assigned.)
- Participate in assignment of Reviewer, Designer and Checker at BLT or other designated resource planning venue.

At Project Initiation Milestone (at least two weeks prior to the 'kick-off' meeting):
- Review Bridge Scope Memo (problem, anticipated solution, TS&L Narrative required or TS&L Memo, alternatives to study).
- Confirm project schedule.
- Confirm assignment of Designer and Checker.
- Meet with and discuss the goals and objectives of the project and the bridge design with the Designer.
- After meeting with the Designer, complete the Reviewer QC/QA Checklist for Project Initiation.

At 50% Preliminary Design Phase:
- Check in with Designer (if not already doing); review the status of the design and the progress of the Alternatives Study (Are the right alternatives being studied? Are there other alternatives that should be included?), TS&L Memo or TS&L Narrative, Plan Sheet(s), Estimate, Table of Bridge Design Standards, and Design Deviations. (This one time check-in is appropriate for a designer experienced in the type of design/work. If the designer has not designed this type of work, or has limited experience with this type of work, the Reviewer should be checking in on a more regular schedule (eg, monthly or weekly). (It is always easier to make corrections in the "path forward" when they are identified earlier than later!)
- For Bridge Program bridges, review Bridge Scoping Memo and ensure that the "problems/deficiencies" are actually getting addressed.

At 85% Preliminary Design Phase thru DAP Milestone:

- For Bridge Program bridges, review Bridge Scoping Memo and ensure that the "problems/deficiencies" are addressed.
- Review Alternatives Study. (Have the right alternatives been studied? Is the preferred alternative the correct choice?)
- Review TS&L Memo or TS&L Narrative, Plan Sheet(s), Estimate, and Design Deviations. (Are all the alternatives in the study properly documented as to the rationale why 1) not selected as the preferred alternative, and 2) selected as the preferred alternative. Are design deviations approved by State Bridge Engineer?)
- Provide written review comments to Designer.
- Hold 'sit-down' with Designer and review responses to review comments. Reach consensus.
- Verify resolution of review comments (review updated documents against responses to review comments).
- Ensure Designer submits TS&L Report to Project Leader for use in DAP.
- Complete the Reviewer QC/QA Checklist for TS&L Report.

At Progress/Preliminary Plans Milestone:

- Review Preliminary/Progress Plans package against list of possible Bridge Plan drawings.
- Review Preliminary/Progress Plans. (have all sheets been started and drafted to 40~50% so Reviewer can see the 'skeleton' of the project coming together?)
- Ensure Designer submits Preliminary/Progress Plans deliverables to Project Leader for use in the Preliminary Plans review package.

At Advance Plans Milestone thru Final Plans Milestone:

- Review PS&E documents (the plans, the specifications / special provisions, the cost estimate, the estimate of construction duration) against 1) TS&L Report, 2) DAP Report, 3) BDDM, 4) design codes, and 5) other applicable guidance.
    - Review against Geotechnical requirements.
    - Review against Hydraulic requirements.
    - Review against Environmental & Permitting requirements.
    - Review against Storm Water requirements. Ensure deck geometry is correct for satisfactory drainage of the bridge deck, and appropriate collection and transport of storm water away from the bridge and water body.
    - Review against Roadway geometrics (horizontal alignment, vertical alignment, superelevation, grades, deck elevations).
    - Review against design exceptions and design deviations.
    - Review against Survey topography (bridge length, width and height fits the contours of the existing and future (proposed) ground surface, foundations are at appropriate location).
    - Review against Right of Way (bridge is within limits of final right of way lines).
    - Review against Mobility requirements.
    - Review against Utility requirements.
    - Review against Railroad requirements.
    - Review against Public Involvement and Aesthetic requirements.
    - Review against Qualified Products List (QPL).
- Review against any revisions to these documents made during the Final Design Phase, and ensures changes are reflected in the Bridge PS&E documents.
- Review cost estimate for appropriate bid items, unit cost, and unit cost modifiers (quantities checked by Bridge Checker).
- Review estimate of probable construction durations. Ensures logical and of appropriate duration for assumed method of construction.
- Review that all reference special provisions are included for applicable project special provisions.
- Review changes to special provisions, other than 'fill in the blank' changes, are appropriate and adequate.
- Review that design and detailing practices used meet standards; or that rationale to deviate from standard is appropriate.
- Review that details are consistent between bridges on projects with multiple bridges; or that rationale for different details between bridges is appropriate.

- Review deliverables against project's funding requirements. Ensure the requirements associated with that "color of money" are completed.
- Provide written review comments to Designer.
- Hold 'sit-down' with Designer and review responses to review comments. Reach consensus.
- Verify resolution of review comments (review updated documents against responses to review comments).
- Ensure Designer submits Advance Plans deliverables to Project Leader for use in the Advance Plans review package.
- Ensure Designer submits Final Plans deliverables to Project Leader for use in the Final Plans package.
- Complete the Reviewer QC/QA Checklist for these milestones.

At PS&E Package Milestone:

- Verify that all review comments resolved and closed out.
- Ensure Bridge-related PD-02 Final PS&E Submittal Checklist requirements are complete and coordinate with Bridge Designer, Project Leader, and OPL Quality Engineer (if necessary) before submitting PS&E package.
- Ensure Designer submits PS&E deliverables to Project Leader for use in the PS&E Package.
- Ensure all Bridge Quality Documents are complete and submitted to Bridge HQ.
- Complete the Reviewer QC/QA Checklist and submit to Bridge Design Manager and Bridge Standards & Practices Manager.

A3.4.3 Bridge Checker

The purpose of the Bridge Checker is to perform a "Quality Check" of the structural design.

At Project Initiation (at least two weeks prior to the 'kick-off' meeting):
- No action.

After the Project Initiation (kick-off) Meeting (0% Preliminary Design Phase):
- No action.

At 50% Preliminary Design Phase:
- No action.

At 85% Preliminary Design Phase thru DAP Milestone:
- No action.

After DAP is approved (0% Final Design) thru Progress/Preliminary Plans Milestone (50% Final Design):
- No action.

After Progress/Preliminary Plans Milestone thru Advance Plans Milestone (90% Final Design):
- No action.

At Advance Plans Milestone thru Final Plans Milestone (100% Final Design):
- Receive Advance Plans package.
- For Class II checks, receive pdf of structural calculations to use to perform a 'line-by-line' check.
- For Class I checks, start to prepare independent calculations.
- Check plan sheets.
- Check quantities and estimate of probable construction costs.
- Check estimate of probable construction schedule.
- Check special provisions.
- Complete calculations check.
- Provide written review comments to Designer.
- Hold 'sit-down' with Designer and review responses to review comments. Reach consensus.
- Verify resolution of review comments (review updated documents against responses to review comments).
- Complete Checker QC Checklist.

At PS&E Package (100% Final Design):
- No action.

A3.4.4 Bridge Subject Matter Expert

The purpose of the Bridge Subject Matter Expert (as it relates to the design of a project) is to ensure design standards and boilerplate special provisions are complete and up-to-date for the type of bridge work being designed and constructed today. The SME is also a reference to the Designer, Checker, Reviewer and others throughout the entire cycle of bridge design, construction, inspection and maintenance of the State's bridge inventory. The SME also provides training (one-on-one, one-on-many, external provider, etc) as needed.

During development of a project:

Before a project even exists:
- Provide technical guidance during maintenance, deficiency identification, and project scoping as requested.
- Assist Bridge Program Manager to identify reasonable and feasible alternatives/options for Alternatives Study.

At Project Initiation (at least two weeks prior to the 'kick-off' meeting):
- Typically no action.

After the Project Initiation (kick-off) Meeting (0% Preliminary Design Phase):
- Typically no action.

At 50% Preliminary Design Phase:
- Provide technical guidance as requested.

At 85% Preliminary Design Phase thru DAP Milestone:
- Review and provide comments to Designer (with copy to the Reviewer).

After DAP is approved (0% Final Design) thru Progress/Preliminary Plans Milestone (50% Final Design):
- Provide technical guidance as requested.
- Review and provide comments to Designer (with copy to the Reviewer), as requested.

After Progress/Preliminary Plans Milestone thru Advance Plans Milestone (90% Final Design):
- Provide technical guidance as requested.
- Review and provide comments to Designer (with copy to the Reviewer and Checker), as requested.

At Advance Plans Milestone thru Final Plans Milestone (100% Final Design):
- Typically no action.

At PS&E Package (100% Final Design):
- Typically no action.

After a project is let and construction is complete:
- Provide technical guidance during inspection and maintenance as requested.

Outside development of a project:
- See BPPM for details.

A3.4.5 Bridge EDMS Specialist

The purpose of the Bridge EDMS is to track, pursue, and ensure all Bridge Quality Documentation is received from Regions/Reviewers, and to ensure this data is entered, stored, retained, and managed in the utmost professional manner.

During development of a project:

At Resource Planning Milestone:
- Receive list of all STIP and Non-STIP projects with bridge work from Bridge Program Manager. (These are the 'lion's share' of the projects to track and collect data.)

At Project Initiation (at least two weeks prior to the 'kick-off' meeting):
- No action.

After the Project Initiation (kick-off) Meeting (0% Preliminary Design Phase):
- No action.

At 50% Preliminary Design Phase:
- No action.

At 85% Preliminary Design Phase thru DAP Milestone:
- Receive pdf of TS&L Report and pdf of Reviewer's review package (data and review comment form) from Reviewer.
- Store in Bridge EDMS.

After DAP is approved (0% Final Design) thru Progress/Preliminary Plans Milestone (50% Final Design):
- Receive pdf of Progress/Preliminary Plans package and pdf of Reviewer's review package (data and review comment form) from Reviewer.
- Store in Bridge EDMS.

After Progress/Preliminary Plans Milestone thru Advance Plans Milestone (90% Final Design):
- Receive pdf of Advance Plans package and pdf of Reviewer's review package (data and review comment form) from Reviewer.
- Store in Bridge EDMS.

At Advance Plans Milestone thru Final Plans Milestone (100% Final Design):
- Receive pdf of Final Plans package and pdf of Reviewer's review package (data and review comment form) from Reviewer.
- Store in Bridge EDMS.

At PS&E Package (100% Final Design):
- Receive pdf of PS&E Package and pdf of Reviewer's review package (data and review comment form) from Reviewer.
- Store in Bridge EDMS.

After PS&E Package:
- Receive the Reviewer's QC/QA Checklist for each project.
- Complete EDMS QC Checklist.

Outside development of a project:
- See BPPM for details.

A3.4.6 Bridge Quality Auditor

The purpose of the Bridge Quality Auditor is to ensure design processes and standards were followed or that appropriate design deviations and exceptions were prepared to document why design processes and standards were not followed.

During development of a project:

At Project Initiation (at least two weeks prior to the 'kick-off' meeting):
- No action.

After the Project Initiation (kick-off) Meeting (0% Preliminary Design Phase):
- No action.

At 50% Preliminary Design Phase:
- No action.

At 85% Preliminary Design Phase thru DAP Milestone:
- No action.

After DAP is approved (0% Final Design) thru Progress/Preliminary Plans Milestone (50% Final Design):
- No action.

After Progress/Preliminary Plans Milestone thru Advance Plans Milestone (90% Final Design):
- No action.

At Advance Plans Milestone thru Final Plans Milestone (100% Final Design):
- No action.

At PS&E Package (100% Final Design):
- No action.

After PS&E Package:
- Receive the Reviewer's QC/QA Checklist for each project.
- On a 'to-be-determined' schedule, identify 'X' projects per year to perform a Quality Audit.
- Perform Quality Audit.
- Prepare report of findings.
- Hold 'sit-down' meeting with State Bridge Engineer, Bridge Design Manager to go over findings.
- Receive some form of assurance that findings will be addressed.
- Complete Auditor QC Checklist.

Outside development of a project:
- See BPPM for details.

APPENDIX – SECTION 3.5 – QUALITY

Outline:

Bridge Designer QC Form

Bridge Reviewer QC/QA Checklist

Bridge Checker QC Form

Bridge Auditor QC Checklist

Bridge EDMS QC Checklist

Bridge Drafter QC Checklist for TS&L Plan Sheet(s)

Bridge Drafter QC Checklist for Advance Plans (95%) Plan Sheet(s)

BRIDGE DESIGNER QC FORM

Project Name:	
Key#:	
Region:	
Designer Name:	

Did you…

	Yes	No	n/a
At Project Initiation:			
…review the Bridge Scope Memo	☐	☐	☐
…review the Class of Project with the Bridge Reviewer	☐	☐	☐
…discuss the Goals & Objectives of the project and the bridge work with the Reviewer	☐	☐	☐
…review the Scope, Schedule & Budget with the Project Leader	☐	☐	☐
…review the Scope, Schedule & Budget with the Reviewer	☐	☐	☐
…formulate a 'plan of action' to get the scope of work done in by the date needed with the budget	☐	☐	☐
…complete the Project Initiation portion of this QC Form	☐	☐	☐
At 50% Preliminary Design Phase:			
…start a table of Bridge Design Standards to document need for Design Deviations	☐	☐	☐
…coordinate early with the Geotech Designer regarding foundation type, and subsurface exploration needs	☐	☐	☐
…discuss alignment and grade concepts with the Road Designer	☐	☐	☐
…discuss deck and bridge drainage concepts with the Storm Water Designer	☐	☐	☐
...discuss mobility and staging concepts with the Mobility Designer	☐	☐	☐
…discuss bridge designs and details with the Construction representative on the project team	☐	☐	☐
...discuss bridge designs and details with the Maintenance representative on the project team	☐	☐	☐
…discuss the environmental aspects of the project with the Environmental person on the project team	☐	☐	☐
…discuss waterway and scour needs with the Hydraulics Designer	☐	☐	☐
…confirm utilities on project site with the Utility Engineer	☐	☐	☐
...confirm railroad requirements with the Railroad person (when bridge work is within 200' of RR)	☐	☐	☐
…provide information to Public Involvement Coordinator as requested	☐	☐	☐
…complete the 50% Preliminary Design Phase portion of this QC Form	☐	☐	☐
At 85% Preliminary Design Phase (95% TS&L Development):			
…obtain approval for Design Deviations & Exceptions	☐	☐	☐
…complete TS&L Narrative or TS&L Memo	☐	☐	☐
…complete Engineer's Estimate @ TS&L	☐	☐	☐
…review TS&L Plan Sheet(s)	☐	☐	☐
…submit completed and reviewed TS&L Report to the Project Leader	☐	☐	☐
…complete the 85% Preliminary Design Phase portion of this QC Form	☐	☐	☐

At start of the Final Design Phase:			
…seek out a list of all the permits that are needed on the project and work with the person responsible to file the permit to get them any bridge data they need to complete the permit (Prepare a Permit Information Memo)	☐	☐	☐
…coordinate alignment and grades with the Road Designer	☐	☐	☐
…coordinate deck and bridge drainage needs with the Storm Water Designer	☐	☐	☐
...coordinate mobility and staging needs with the Mobility Designer	☐	☐	☐
…coordinate the environmental aspects of the project with the Environmental person on the project team	☐	☐	☐
…coordinate foundation design with the Geotech Designer	☐	☐	☐
…coordinate waterway and scour needs with the Hydraulics Designer	☐	☐	☐
…provide information to Public Involvement Coordinator as requested	☐	☐	☐
Was the PI information commensurate for the audience intended	☐	☐	☐
…complete the Start of Final Design Phase portion of this QC Form	☐	☐	☐
At Preliminary/Progress Plans Package Milestone:			
…discuss bridge designs and details with the Construction representative on the project team	☐	☐	☐
...discuss bridge designs and details with the Maintenance representative on the project team	☐	☐	☐
…confirm utility conflicts and needs with the Utility Engineer	☐	☐	☐
...discuss railroad requirements with the Railroad person (when bridge work is within 200’ of RR)	☐	☐	☐
…provide Preliminary/Progress Plan sheet data to Detailer	☐	☐	☐
…complete SPLIST to identify needed special provisions	☐	☐	☐
…complete Engineer’s Estimate @ Preliminary Plans	☐	☐	☐
…review Preliminary/Progress Plan Sheet(s)	☐	☐	☐
…provide information to Public Involvement Coordinator as requested	☐	☐	☐
Was the PI information commensurate for the audience intended	☐	☐	☐
…submit completed and reviewed Preliminary/Progress Plan Package data to the Project Leader	☐	☐	☐
…complete the Preliminary/Progress Plans Package Milestone portion of this QC Form	☐	☐	☐
At Advance Plans Package Milestone:			
…provide Advance Plan sheet details to Detailer	☐	☐	☐
…complete Draft Special Provisions	☐	☐	☐
…complete Engineer’s Estimate @ Advance Plans	☐	☐	☐
…complete Draft Engineer’s Estimate of Probable Construction Schedule	☐	☐	☐
…review Advance Plan Sheet(s)	☐	☐	☐
…provide information to Public Involvement Coordinator as requested	☐	☐	☐
Was the PI information commensurate for the audience intended	☐	☐	☐
…submit completed and reviewed Advance Plan Package data to the Project Leader	☐	☐	☐
…complete the Advance Plans Package Milestone portion of this QC Form	☐	☐	☐

At Final Plans Package Milestone:			
…provide Final Plan sheet corrections to Detailer (from QC Check)	☐	☐	☐
…complete Final Special Provisions	☐	☐	☐
…complete Engineer's Estimate @ Final Plans	☐	☐	☐
…complete Final Engineer's Estimate of Probable Construction Schedule	☐	☐	☐
…review and sign Final Plan Sheet(s)	☐	☐	☐
…provide information to Public Involvement Coordinator as requested	☐	☐	☐
Was the PI information commensurate for the audience intended	☐	☐	☐
…submit completed, checked and reviewed Final Plan Package data to the Project Leader	☐	☐	☐
…complete the Final Plans Package Milestone portion of this QC Form	☐	☐	☐
At PS&E Package Milestone:			
…submit completed, reviewed and signed PS&E Plan Package data to the Project Leader	☐	☐	☐
…complete Design & Checker Calculation Book(s) (to this point in time)	☐	☐	☐
…complete the bridge load rating	☐	☐	☐
…complete Bridge Close-Out documentation	☐	☐	☐
…ensure all Bridge Deliverables received by Bridge HQ	☐	☐	☐
…ensure all Bridge Quality Documentation received by Bridge HQ	☐	☐	☐
…complete the PS&E Package Milestone portion of this QC Form	☐	☐	☐
	☐	☐	☐
Signatures			
Designer:			
Bridge Reviewer:			

BRIDGE REVIEWER QC/QA CHECKLIST

Project Name:	
Key#:	
Region:	
Reviewer Name:	
RESOURCE PLANNING MILESTONE	
	Review Bridge Scope Memo
	Complete Resource Planning
	Assigned Designer Name:
	Assigned Checker Name:
PROJECT INITIATION MILESTONE (2 weeks prior)	
	Review Bridge Scope Memo
	Confirm Project Schedule
	Confirm Designer Name:
	Confirm Checker Name:
	Meet with Designer
50% PRELIMINARY DESIGN PHASE (~50% TS&L Development)	
	Check-in with Designer
	Check on progress of Alternatives Study
	Check on status of TS&L Memo or TS&L Narrative
	Review Bridge Scope Memo
85% PRELIMINARY DESIGN PHASE (95% TS&L Development)	
	Review Bridge Scope Memo
	Review Alternatives Study
	Review TS&L Memo or TS&L Narrative
	Review TS&L Plan Sheet(s)
	Review TS&L Estimate
	Review Bridge Design Standards Table, and Design Deviations and Exceptions
	Provide written review comments to Designer
	Hold ‘sit-down’ with Designer to review comment responses
	Verify resolution of review comments

PRELIMINARY/PROGRESS PLANS MILESTONE	
	Review Preliminary/Progress Plans plan sheets
	Review Engineer's Estimate @ Preliminary/Progress Plans
	Review SPLIST
ADVANCE PLANS MILESTONE	
	Review TS&L Report
	Review Design Deviations and Exceptions
	Review Advance Plans plan sheets
	Review Engineer's Estimate @ Advance Plans
	Review Engineer's estimate of probable construction schedule
	Review Special Provisions package
	Provide written review comments to Designer
	Hold 'sit-down' with Designer to review comment responses
	Verify resolution of review comments
FINAL PLANS MILESTONE	
	Review Final Plans plan sheets
	Review Engineer's Estimate @ Final Plans
	Review Engineer's estimate of probable construction schedule
	Review Final Special Provisions package
	Provide written review comments to Designer
	Hold 'sit-down' with Designer to review comment responses
	Verify resolution of review comments
PS&E PACKAGE MILESTONE	
	Verify all review comments resolved and closed out
	Verify Bridge-related PD-02 requirements complete
	Verify Calculation Books completed (to this point in time)
	Verify Bridge load rating completed
	Ensure all Bridge Quality Documents are complete and submitted to Bridge HQ
	Submit this QC/QA Form to Bridge HQ
Signatures	
Bridge Reviewer:	

BRIDGE CHECKER QC FORM

Project Name:	
Key#:	
Region:	
Checker Name:	

Did you…

	Yes	No	n/a
…read the Bridge Scope Memo	☐	☐	☐
…get your Schedule & Budget from the Designer	☐	☐	☐
…confirm the Class of Check with the Designer and Reviewer	☐	☐	☐
…prepare a plan (of action) to get the check done in by the date needed with the given funds	☐	☐	☐
…check alignment and grades with the Road Designer	☐	☐	☐
…check mobility and staging needs with the Mobility Designer	☐	☐	☐
…read the Final Foundations Report	☐	☐	☐
…read the Final Hydraulics Report	☐	☐	☐
…assess contractor work staging area needs and what provided	☐	☐	☐
…assess Temporary Works needed and what accounted for? The Construction Contractor may be responsible for Temporary Works, but the designer must be aware of and account for for a successful project. (ie, Don't specify something that can't be done!)	☐	☐	☐
…review the TS&L Report	☐	☐	☐
…review the Bridge Design Standards Assessment, and approved Design Deviations/Exceptions	☐	☐	☐
…check the bridge geometry and clearances	☐	☐	☐
...check the construction details for fit (especially rebar), clearances, and tolerances	☐	☐	☐
For a Class I Check, did you prepare independent calculations	☐	☐	☐
For a Class I check, did you prepare a separate calculation book, and submit that book to the Bridge Designer	☐	☐	☐
For Class II Check, did you redline a copy of the Designer's calculations	☐	☐	☐
…redline a copy of the plan sheets	☐	☐	☐
…redline a copy of the estimate	☐	☐	☐
…redline a copy of the special provisions	☐	☐	☐
…check the Engineer's Estimate of probable Construction Schedule	☐	☐	☐
…provide review comments to the Designer	☐	☐	☐
…prepare Check Calculation Book and provide to the Designer	☐	☐	☐
…complete this QC Form	☐	☐	☐
Signatures			
Checker:			
Bridge Reviewer:			

BRIDGE QUALITY AUDITOR QC CHECKLIST

Project Name:	
Key#:	
Region:	
Auditor Name:	
DESIGN QUALITY PLAN	
	Available and complete.
	Bridge Design Supplements included, if needed
TS&L REPORT	
	Memo or Narrative
	Engineer's Estimate at TS&L
	Design Deviations & Exceptions
	Plan Sheet(s)
	Review Comment Forms – resolved and QC'd
PRELIMINARY/PROGRESS PLANS PACKAGE	
	Engineer's Estimate at Preliminary Plans
	Plan Sheets
ADVANCE PLANS PACKAGE	
	Draft Special Provisions
	Engineer's Estimate at Advance Plans
	Plan Sheets
	Review Comment Forms – resolved and QC'd
FINAL PLANS PACKAGE	
	Final Special Provisions
	Engineer's Estimate at Final Plans
	Plan Sheets
	Review Comment Forms – resolved and QC'd
PS&E PACKAGE	
	Signed Plan Sheets
	Calculation Books
	Load Rating
	Review Comment Forms – resolved and QC'd

BRIDGE EDMS QC CHECKLIST

[Under development]

BRIDGE DRAFTER QC CHECKLIST FOR TS&L PLAN SHEET(S)

See *Section 2*.

BRIDGE DRAFTER QC CHECKLIST FOR ADVANCE PLANS (95%) PLAN SHEETS

See *Section 2*.

APPENDIX – SECTION 3.9 – PRELIMINARY DESIGN / DAP / TS&L

Outline:

TS&L Memo (Template)

TS&L Narrative for Bridge Replacement (Template)

TS&L Narrative for Bridge Strengthening (Template)

TS&L Narrative for Phase 1 Seismic Retrofit (Template)

TS&L MEMO

PROJECT INFORMATION (header; no text entry this line)			
Bridge Name:			
Bridge Number:			
Project Name:			
Key Number:			
Region:			
Purpose or Goal of Project:			
Location of Project (no text entry this line)			
Highway Name:		Milepoint:	
Nearest Town or City:		NHS Route (Y/N):	
Lat/Long:			
Description of Existing Bridge:			
BRIDGE DESIGN CRITERIA (header; no text entry this line)			
Design Life:			
Design Code(s):			
Summary of Design Deviations and Exceptions: (list following with hard return between items)			
MOBILITY (header; no text entry this line)			
ADT (current year):		ADT (future year):	
ADTT (current year):		'% Trucks:		Future % Trucks:	
'# Lanes required remain open:			
Minimum opening required:			
Largest vehicles must pass:			
Emergency vehicle passage:			
School bus passage:			
Permit vehicles passage:			
Staging requirements:			
Detour(s) & Detour Bridge(s):			
Other Mobility Info:			
ROADWAY (header; no text entry this line)			
Design Speed (mph):		Posted Speed (mph)	
Horizontal alignment (on tangent, spiral, simple curve):			
Superelevation on bridge (range):			
Vertical grade entering bridge:			
Intermediate grade(s) across bridge:			
Grade exiting bridge:			
Roadway Width / Typical Section:			
Other Roadway Info:			
HYDRAULICS (header; no text entry this line)			
Design Flood (year):		Design High Water Elevation (ft):	
Ordinary High Water Elev (ft):		100-yr High Water Elev (ft):	
Design Freeboard (ft):			
Floodway Info:			
Backwater Info:			
Scour Info:			
Debris Info:			
Other Hydraulics Info:			
GEOTECHNICAL & FOUNDATIONS (header; no text entry this line)			
Subsurface Conditions:			
Lateral Earth Pressure Info:			
Foundation Protection:			
Other Foundations Info:			

ENVIRONMENTAL INFORMATION & CONSTRAINTS (header; no text entry this line)	
Note: The following environmental information should be a very brief summary; yes (applies) or no (does not apply), requirements, and EFFECT on bridge design. Include temporary works, and construction methods. Do not include information and quantities for ACOE & DSL permits. This information should be documented in a separate memo.	
Permit Process (individual or Programmatic):	
In-Water Work Window (dates):	
Birds (include bird window dates):	
Bats:	
T&E Species:	
Fish:	
Fish Passage:	
Wildlife:	
Plants (include plant window dates):	
Wetlands:	
Water Quality:	
Noise:	
Fluvial:	
Historic:	
Archeological (due to confidential subject only answer “yes” or “no”):	
Fill-Removal:	
Coast Guard:	
National Scenic Area:	
Site Requirements (setbacks, ordinances, conditional use, etc):	
Other Environmental Info:	
TRAFFIC (header; no text entry this line)	
Signs:	
Signals:	
Illumination:	
Other Traffic info:	
UTILITIES (header; no text entry this line)	
Near bridge, overhead:	
Near bridge, underground:	
On bridge:	
Other Utilities info:	
RAILROAD (header; no text entry this line)	
Name(s):	
Vertical Clearance Requirements:	
Horizontal Clearance Requirements:	
Other Railroad info:	
RIGHT OF WAY (header; no text entry this line)	
Construction access needs:	
Other Right of Way info:	
ELEMENT 1: (deck overlay, deck joint retrofit, rail retrofit, bearing retrofit, etc)	
Problem / Deficiency:	
OPTIONS (header; no text entry this line)	
1.	
2.	
3.	
PREFERRED / RECOMMENDED OPTION (header; no text entry this line; use next line)	
ELEMENT 2: (deck overlay, deck joint retrofit, rail retrofit, bearing retrofit, etc)	
Problem / Deficiency:	
OPTIONS (header; no text entry this line)	

1.	
2.	
3.	
PREFERRED / RECOMMENDED OPTION (header; no text entry this line; use next line)	
ELEMENT 3: (deck overlay, deck joint retrofit, rail retrofit, bearing retrofit, etc)	
Problem / Deficiency:	
OPTIONS (header; no text entry this line)	
1.	
2.	
3.	
PREFERRED / RECOMMENDED OPTION (header; no text entry this line; use next line)	
AESTHETICS (header; no text entry this line)	
OTHER DESIGN JUSTIFICATION (if rationale for decisions made is not provided above) (header; no text entry this line; one subject per paragraph)	
RATIONALE FOR CHANGE IN SCOPE (header; no text entry this line)	

TS&L NARRATIVE FOR BRIDGE REPLACEMENT

PROJECT INFORMATION (header; no text entry this line)			
Bridge Name:			
Bridge Number:			
Project Name:			
Key Number:			
Region:			
Purpose or Goal of Project:			
Location of Project (no text entry this line)			
Highway Name:		Milepoint:	
Nearest Town or City:		NHS Route (Y/N):	
Lat/Long:			
Description of Existing Bridge:			
Problem / Deficiency:			
ALTERNATIVES STUDIED (header; no text entry this line)			
1.			
2.			
3.			
PREFERRED / RECOMMENDED ALTERNATIVE (header; no text entry this line; use next line)			
BRIDGE DESIGN CRITERIA (header; no text entry this line)			
Design Life:			
Design Code(s):			
Seismic Criteria:			
Summary of Design Deviations and Exceptions: (list following with hard return between items)			
MOBILITY (header; no text entry this line)			
ADT (current year):		ADT (future year):	
ADTT (current year):	‘% Trucks:		Future % Trucks:
‘# Lanes required remain open:			
Minimum opening required:			
Largest vehicles must pass:			
Emergency vehicle passage:			
School bus passage:			
Permit vehicles passage:			
Staging requirements:			
Detour(s) & Detour Bridge(s):			
Other Mobility Info:			
ROADWAY (header; no text entry this line)			
Design Speed (mph):		Posted Speed (mph)	
Horizontal alignment (on tangent, spiral, simple curve):			
Superelevation on bridge (range):			
Vertical grade entering bridge:			
Intermediate grade(s) across bridge:			
Grade exiting bridge:			
Roadway Width / Typical Section:			
Other Roadway Info:			
HYDRAULICS (header; no text entry this line)			
Design Flood (year):		Design High Water Elevation (ft):	
Ordinary High Water Elev (ft):		100-yr High Water Elev (ft):	
Design Freeboard (ft):			
Floodway Info:			
Backwater Info:			

Scour Info:
Debris Info:
Abutment and Pier Info / Recommendations:
Other Hydraulics Info:
GEOTECHNICAL & FOUNDATIONS (header; no text entry this line)
Subsurface Conditions:
Lateral Earth Pressure Info:
Liquifaction Potential:
Foundation Info / Recommendations:
Foundation Protection:
Other Foundations Info:
ENVIRONMENTAL INFORMATION & CONSTRAINTS (header; no text entry this line)
Note: The following environmental information should be a very brief summary; yes (applies) or no (does not apply), requirements, and EFFECT on bridge design. Include temporary works, and construction methods. Do not include information and quantities for ACOE & DSL permits. This information should be documented in a separate memo.
Permit Process (individual or Programmatic):
In-Water Work Window (dates):
Birds (include bird window dates):
Bats:
T&E Species:
Fish:
Fish Passage:
Wildlife:
Plants (include plant window dates):
Wetlands:
Water Quality:
Noise:
Fluvial:
Historic:
Archeological (due to confidential subject only answer “yes” or “no”):
Fill-Removal:
Coast Guard:
National Scenic Area:
Site Requirements (setbacks, ordinances, conditional use, etc):
Other Environmental Info:
TRAFFIC (header; no text entry this line)
Signs:
Signals:
Illumination:
Other Traffic info:
UTILITIES (header; no text entry this line)
Near bridge, overhead:
Near bridge, underground:
On bridge:
Other Utilities info:
RAILROAD (header; no text entry this line)
Name(s):
Vertical Clearance Requirements:
Horizontal Clearance Requirements:
Other Railroad info:
RIGHT OF WAY (header; no text entry this line)
Bridge within existing right of way:
If no, where is right of way needed:

Other Right of Way info:			
SUPERSTRUCTURE (header; no text entry this line)			
Type:			
'# Spans:		Skew:	
Span arrangement & span lengths:			
Deck type & design:			
Deck drainage requirements:			
Bridge rail:			
Protective screening requirements:			
End panels:			
Other Superstructure info:			
SUBSTRUCTURE (header; no text entry this line)			
Abutments (non-integral, semi-integral, integral):			
Piers:			
Bearings:			
Other Substructure info:			
AESTHETICS (header; no text entry this line)			
OTHER DESIGN JUSTIFICATION (if rationale for decisions made is not provided above) (header; no text entry this line; one subject per paragraph)			

TS&L NARRATIVE FOR BRIDGE STRENGTHENING

PROJECT INFORMATION (header; no text entry this line)					
Bridge Name:					
Bridge Number:					
Project Name:					
Key Number:					
Region:					
Purpose or Goal of Project:					
Location of Project (no text entry this line)					
Highway Name:			Milepoint:		
Nearest Town or City:			NHS Route (Y/N):		
Lat/Long:					
Description of Existing Bridge:					
BRIDGE DESIGN CRITERIA (header; no text entry this line)					
Design Life:					
Design Code(s):					
Seismic Criteria:					
Summary of Design Deviations and Exceptions: (list following with hard return between items)					
MOBILITY (header; no text entry this line)					
ADT (current year):		ADT (future year):			
ADTT (current year):		'% Trucks:		Future % Trucks:	
'# Lanes required remain open:					
Minimum opening required:					
Largest vehicles must pass:					
Emergency vehicle passage:					
School bus passage:					
Permit vehicles passage:					
Staging requirements:					
Detour(s) & Detour Bridge(s):					
Other Mobility Info:					
ROADWAY (header; no text entry this line)					
Other Roadway Info:					
ENVIRONMENTAL INFORMATION & CONSTRAINTS (header; no text entry this line)					
Note: The following environmental information should be a very brief summary; yes (applies) or no (does not apply), requirements, and EFFECT on bridge design. Include temporary works, and construction methods. Do not include information and quantities for ACOE & DSL permits. This information should be documented in a separate memo.					
Permit Process (individual or Programmatic):					
In-Water Work Window (dates):					
Birds (include bird window dates):					
Bats:					
T&E Species:					
Fish:					
Fish Passage:					
Wildlife:					
Plants (include plant window dates):					
Wetlands:					
Water Quality:					
Noise:					
Fluvial:					
Historic:					
Archeological (due to confidential subject only answer "yes" or "no"):					

Fill-Removal:	
Coast Guard:	
National Scenic Area:	
Site Requirements (setbacks, ordinances, conditional use, etc):	
Other Environmental Info:	
UTILITIES (header; no text entry this line)	
Near bridge, overhead:	
Near bridge, underground:	
On bridge:	
Other Utilities info:	
RAILROAD (header; no text entry this line)	
Name(s):	
Vertical Clearance Requirements:	
Horizontal Clearance Requirements:	
Other Railroad info:	
RIGHT OF WAY (header; no text entry this line)	
Construction access needs:	
Other Right of Way info:	
ELEMENT 1: (girder, stringer, truss, floorbeam, crossbeam, etc)	
Problem / Deficiency:	
ALTERNATIVES STUDIED (header; no text entry this line)	
1.	
2.	
3.	
PREFERRED / RECOMMENDED ALTERNATIVE (header; no text entry this line; use next line)	
ELEMENT 2: (girder, stringer, truss, floorbeam, crossbeam, etc)	
Problem / Deficiency:	
ALTERNATIVES STUDIED (header; no text entry this line)	
1.	
2.	
3.	
PREFERRED / RECOMMENDED ALTERNATIVE (header; no text entry this line; use next line)	
ELEMENT 3: (girder, stringer, truss, floorbeam, crossbeam, etc)	
Problem / Deficiency:	
ALTERNATIVES STUDIED (header; no text entry this line)	
1.	
2.	
3.	
PREFERRED / RECOMMENDED ALTERNATIVE (header; no text entry this line; use next line)	
AESTHETICS (header; no text entry this line)	
OTHER DESIGN JUSTIFICATION INFORMATION (if rationale for decisions made is not provided above) (header; no text entry this line; one subject per paragraph)	

TS&L NARRATIVE FOR PHASE 1 SEISMIC RETROFIT

PROJECT INFORMATION (header; no text entry this line)					
Bridge Name:					
Bridge Number:					
Project Name:					
Key Number:					
Region:					
Purpose or Goal of Project:					
Location of Project (no text entry this line)					
Highway Name:			Milepoint:		
Nearest Town or City:			NHS Route (Y/N):		
Lat/Long:					
Description of Existing Bridge:					
BRIDGE DESIGN CRITERIA (header; no text entry this line)					
Design Life:					
Design Code(s):					
Seismic Criteria:					
Summary of Design Deviations and Exceptions: (list following with hard return between items)					
MOBILITY (header; no text entry this line)					
ADT (current year):			ADT (future year):		
ADTT (current year):		‘% Trucks:		Future % Trucks:	
‘# Lanes required remain open:					
Minimum opening required:					
Largest vehicles must pass:					
Emergency vehicle passage:					
School bus passage:					
Permit vehicles passage:					
Staging requirements:					
Detour(s) & Detour Bridge(s):					
Other Mobility Info:					
ROADWAY (header; no text entry this line)					
Other Roadway Info:					
ENVIRONMENTAL INFORMATION & CONSTRAINTS (header; no text entry this line)					
Note: The following environmental information should be a very brief summary; yes (applies) or no (does not apply), requirements, and EFFECT on bridge design. Include temporary works, and construction methods. Do not include information and quantities for ACOE & DSL permits. This information should be documented in a separate memo.					
Permit Process (individual or Programmatic):					
In-Water Work Window (dates):					
Birds (include bird window dates):					
Bats:					
T&E Species:					
Fish:					
Fish Passage:					
Wildlife:					
Plants (include plant window dates):					
Wetlands:					
Water Quality:					
Noise:					
Fluvial:					
Historic:					
Archeological (due to confidential subject only answer “yes” or “no”):					

Fill-Removal:	
Coast Guard:	
National Scenic Area:	
Site Requirements (setbacks, ordinances, conditional use, etc):	
Other Environmental Info:	
UTILITIES (header; no text entry this line)	
Near bridge, overhead:	
Near bridge, underground:	
On bridge:	
Other Utilities info:	
RAILROAD (header; no text entry this line)	
Name(s):	
Vertical Clearance Requirements:	
Horizontal Clearance Requirements:	
Other Railroad info:	
RIGHT OF WAY (header; no text entry this line)	
Bridge within existing right of way:	
If no, where is right of way needed:	
Construction Access needs:	
Other Right of Way info:	
ELEMENT 1: (pulloff restraint, continuity device, bearings, etc)	
Problem / Deficiency:	
ALTERNATIVES STUDIED (header; no text entry this line)	
1.	
2.	
3.	
PREFERRED / RECOMMENDED ALTERNATIVE (header; no text entry this line; use next line)	
ELEMENT 2: (pulloff restraint, continuity device, bearings, etc)	
Problem / Deficiency:	
ALTERNATIVES STUDIED (header; no text entry this line)	
1.	
2.	
3.	
PREFERRED / RECOMMENDED ALTERNATIVE (header; no text entry this line; use next line)	
ELEMENT 3: (pulloff restraint, continuity device, bearings, etc)	
Problem / Deficiency:	
ALTERNATIVES STUDIED (header; no text entry this line)	
1.	
2.	
3.	
PREFERRED / RECOMMENDED ALTERNATIVE (header; no text entry this line; use next line)	
AESTHETICS (header; no text entry this line)	
OTHER DESIGN JUSTIFICATION INFORMATION (if rationale for decisions made is not provided above) (header; no text entry this line; one subject per paragraph)	

APPENDIX – SECTION 3.91 – METRIC CONVERSION

Outline:

A3.91.1 Introduction

A3.91.2 Basic Units

A3.91.3 Derived Units

A3.91.4 Metric Conversion Factors

A3.91.5 Metric Procedural Rules

A3.91.6 Bridge Plan and Preparation Guidelines

A3.91.7 Miscellaneous Common Conversions

A3.91.1 Introduction

The International System of Units (SI), a modern version of the metric system of measurement, is being adopted throughout the world. To remain competitive in the global economy, Congress determined the United States must convert to SI.

FHWA was planning to require ODOT and local agencies to submit contract documents in metric by September 30, 1996. Congress then postponed the implementation date to September 30, 2000 and later completely removed the requirement.

After removal of the Metric requirement, most states have reverted back to English units or dual units.

ODOT believes it is important to be in alignment with other state DOT's and local government partners. ODOT began converting back to English units in late 2002 and began contracting State projects in English units in early 2004.

This section has been retained to provide a guide to the units and conversions most commonly used by the Bridge Engineering Section during the Metric era. This section may help with the interpretation of plans produced during the Metric era.

A3.91.2 Basic Units

There are five metric "basic units" that concern bridge design and construction (see Figure 3.91.2).

BASIC ODOT BRIDGE DESIGN METRIC UNITS

Quantity	Unit	Symbol
Length	Meter	m
Mass	Kilogram	kg
Time	Second	s
Temperature	Celsius	^{o}C
Plane angles	degree, minute, second	0^{0}, 0', 0"

Figure 3.91.2

3.91.2.1 Decimal Prefixes

Many numbers resulting from metric calculations are too large or small to be practically used. Three decimal prefixes are commonly used with the base units to produce manageable numbers (see Figure 3.91.2.1).

DECIMAL PREFIXES

Prefix	Symbol	Magnitude	Expression
Mega	M	10^{6}	1 000 000 (one million)
Kilo	k	10^{3}	1000 (one thousand)
Milli	m	10^{-3}	0.001 (one thousandth)

Figure 3.91.2.1

A3.91.3 Derived Units

In addition to the five basic units, there are three metric units derived from the basic units that are used frequently in structural calculations (see Figure 3.91.3).

DERIVED UNITS

Quantity	Name	Symbol	Expression
Force	Newton	N	$N = kg \bullet m/s^{2}$
Pressure,stress	Pascal	Pa	$Pa = N/m^{2}$
Energy	Joule	J	$J = N \bullet m$

Figure 3.91.3

3.91.3.1 Force

In order to perform metric calculations properly, it is important to understand the distinction between mass "kg" and force "N".

In the metric system, there are separate units for mass "kg" and force "N". Mass indicates the quantity of matter in an object. Force or "force of gravity" is the acceleration due to gravity the object experiences in a particular environment. The mass must be converted to force before computing structural reactions, shears, moments, or internal stresses. Force "N" = mass times acceleration due to gravity. The metric acceleration of gravity on the earth's surface is 9.807 m/s^2 (i.e., 32.2 ft/s^2 x 0.3048 m/ft). One newton = one kilogram x (one meter)/(one second)^2.

For example, a simply supported beam 10 meters long with a mass of 1000 kg/m would have a total mass of 10 000 kg (see Figure 3.91.3.1). However, the dead load or force on a beam, on the earth's surface, used to calculate the reactions, shears, moments, etc. would be 1000 x 9.807 = 9807 N/m. The distinction between mass and force in structural calculations is very important.

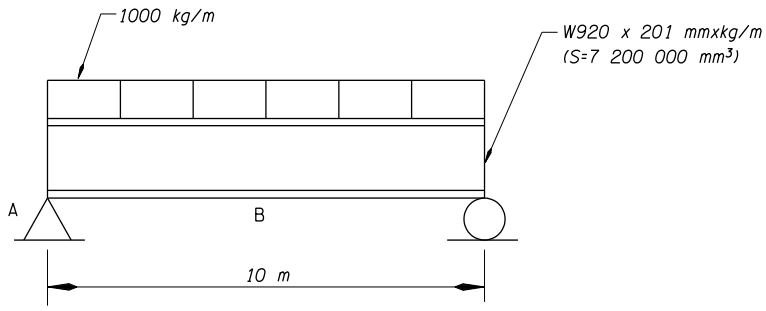

Quantity	Inch-Pound Units	Metric Units
Dead Load (Force)	= 672+135 = 807 lb/ft	= (1000+201) (9.807) = 11 777.8 N/m
V_A = wl/2	= (807)(32.808)/2 = 13,238 lb	= (11 777.8) (10)/2 = 58 889 N
$M_B = wl^2/8$	= $(807)(32.808)^2/8$ = 108,578 ft-lb	= $(11\ 777.8)(10)^2/8$ = 147 222 N•m
F_B = M/s	= (108,578)(12in/ft)/440 = 2961 psi	=$(147\ 222)(10^9 mm^3/m^3)/7210x10^3$ = 20 419 000 Pa = 20 419 kPa = 20.419 MPa

Note: lb is understood to be lb-force.

Figure 3.91.3.1

3.91.3.2 Stress

The pascal is not universally accepted as the only unit of stress. Because steel section properties are expressed in millimeters, it may be more convenient to express stress in a derivative of pascals; that is in newtons per square millimeter (1 N/mm^2 = 1 MPa).

3.91.3.3 Energy

Although the joule is a standard metric unit, it is typically not used in structural design. Moments are always expressed in terms of Nm, or the derivative kN•m.

A3.91.4 Metric Conversion Factors

Figure 3.91.4, is intended to provide common conversion factors and show typical equivalent conversion units between "inch-pound" and "metric" values. The factors will allow the designer to get a feel for the magnitude of metric units as compared to inch-pound units.

COMMON METRIC UNITS AND CONVERSIONS

Quantity	From Inch-Pound Units	To Metric Units	Multiply by
Length	mile	km	1.609 344
	foot	m	0.304 8
	inch	mm	25.4
Area	square mile	km^2	2.590 00
	acre	m^2	4 046.87
	square yard	m^2	0.836 127 4
	square foot	m^2	0.092 903 0
	square inches	mm^2	645.160
Volume	cubic yard	m^3	0.764 555
	cubic foot	m^3	0.028 316 8
Mass*	Lb	kg	0.453 592
	Ton	kg	0.907 184
Mass/unit length*	Plf	kg/m	1.488 16
Mass/unit area*	Psf	kg/m^2	4.882 43
Mass density*	Pcf	kg/m^3	16.018 5
Force	Lb	N	4.448 22
	metric kg	kN	9.806 65
	kip	kN	4.448 22
Force/unit length	Plf	n/m	14.593 9
	Klf	kN/m	14.593 9
Pressure, stress, Modulus of elasticity	Psf	Pa	47.880 3
	ksf	kPa	47.880 3
	psi	kPa	6.894 76
	ksi	MPa	6.894 76
Bending moment, torque, moment of force	ft-lb	N•m	1.355 82
	ft-kip	kN•m	1.355 82
Moment of inertia	in^4	mm^4	416 231
Section modulus	in^3	mm^3	16 387.064
Temperature	^oF	^oC	5/9 (^oF - 32)

*Note: The Inch-Pound Units system using "a mass which weighs such and such pounds" and converting to true Metric Units masses.

Figure 3.91.4

A3.91.5 Metric Procedural Rules

3.91.5.1 Writing Metric Symbols and Names

- Unit symbols should be in lower case except for newton (N), pascal (Pa), and mega (M).
- Unit names should always be printed in lower case, i.e., newton, pascal, kilogram.
- Do not use the plural of unit symbols (write 45 kg, not 45 kgs), but do use the plural of written unit names (several kilograms).
- Leave a space between the numeral and a unit symbol. Write "70 kg" or "30 ^{o}C", not "70kg" or "30°C".
- Do not use a period after the symbol. Write "70 kg", not "70 kg., except when it comes at the end of a sentence.
- Indicate the product of two or more units in symbolic form by using a dot between the symbols, i.e., N•m or kg•m.
- Do not mix names and symbols. Write N•m or newton meter, not N•meter or newton•m.
- Do not leave a space between a decimal prefix and a unit symbol. Write "MPa" or "kN•m", not "M Pa" or k N•m".

3.91.5.2 Writing Numbers

- Use decimals, not fractions. Write 0.75 m, not 3/4 m.
- Use a zero before the decimal point for values less than one. Write 0.65 kg, not .65 kg.
- Spaces are frequently used to separate blocks of three digits either side of the decimal point. Never use a comma to separate the blocks. For plan dimensions, it will be acceptable to either insert or omit the space. Write 16 387.064 or 16387.064; but never 16,387.064.

3.91.5.3 Conversions and Rounding

When converting from inch-pound units to metric units, round the metric value to the same number of digits as there were in the inch-pound number, i.e., 235.75 lb x 0.453 592 kg/lb = 106.9343 kg which should be rounded to 106.93 kg.

Also see *ASTM E380*, Section 5, for general guidelines.

A3.91.6 Bridge Plan and Preparation Guidelines

3.91.6.1 Plan Dimensions

For dimensions and elevations use:

- Millimeters in standard drawings and structural details.
- Meters for plan dimensions (structure and span lengths, structure width, lane and shoulder widths,

etc.) and other long dimensions.

- Meters to three places for elevations, preceded with the abbreviation El. (e.g., El. 309.564).

To eliminate the repetitive use of (mm) and (m), these will not be used for dimensions in millimeters and elevations in meters. Meter dimensions should be followed by the symbol (m).

The following note should be shown on the plans, "All dimensions are in millimeters (mm) and all elevations are in meters (m), except as noted.".

At all locations in notes, etc. use (mm) and (m) notations.

3.91.6.2 Reinforcing Steel

A new series of soft converted reinforcing steel sizes should be used. Figures 3.91.6.2A and 3.91.6.2B on the following page show the metric properties for conventional and prestressing steel. The equivalent area in square inches is shown for comparison purposes. The metric bar size is roughly equal to the bar diameter in millimeters.

The length of straight bars should be shown in 100 millimeter increments where possible. Bent bars should be detailed to the nearest 20 millimeter total length.

3.91.6.3 Fasteners

Fasteners are to be called out as a soft conversion to the nearest 0.1 mm. Use the appropriate English specifications for bolts, nuts and washers.

3.91.6.4 Structural Steel

The structural steels called out in ODOT plans and specifications all have metric equivalents. These equivalent specifications have the same number (AASHTO or ASTM) followed by a capital M; e.g. AASHTO M 270M or ASTM A 709M.

Structural steel shapes will be a soft conversion. AISC conversion tables are available.

Plate thickness should be a soft conversion and called out to the nearest 0.1 mm.

Normally plate widths should be a hard metric conversion. In some situations it may be appropriate to use soft converted plate widths. If repetitious pieces have a dimension that can use a common English plate width, one plate cut can be avoided and it will be more economical to fabricate the item.

REINFORCING BAR COMPARISON

Metric Bar	English Bar	English Dia. (in)	English Area (in^2)	English Weight (lb/ft)	Metric Dia. (mm)	Metric Area (mm^2)	Metric Mass (kg/m)
#10	#3	0.375	0.11	0.376	9.5	71	0.560
#13	#4	0.500	0.20	0.668	12.7	129	0.994
#16	#5	0.625	0.31	1.043	16.0	199	1.552
#19	#6	0.750	0.44	1.502	19.1	284	2.235
#22	#7	0.875	0.60	2.044	22.2	387	3.042
#25	#8	1.000	0.79	2.670	25.4	510	3.973
#29	#9	1.128	1.00	3.400	28.7	645	5.060
#32	#10	1.270	1.27	4.303	32.3	819	6.404
#36	#11	1.410	1.56	5.313	35.8	1006	7.907
#43	#14	1.693	2.25	7.650	43.0	1452	11.38
#57	#18	2.257	4.00	13.60	57.3	2581	20.24

Figure 3.91.6.2A

Stock Bar Lengths

- #10 – 6.09 and 12.19 m
- #13 & # 16 – 6.09, 9.14 and 12.19 m
- #19 thru #36 – 18.28 m
- #43 thru #57 – 18.28, 21.33 and 24.38 m

PRESTRESSING STEEL - Conversion of prestressing steel should be a soft conversion using the table below. Make sure standard drawings and plan detail sheets specify the correct strand diameters.

SEVEN WIRE, UNCOATED STRAND
(270 Grade Low-Relaxation AASHTO M203 (ASTM A-416))

Metric Size (mm)	English Size (inch)	Metric Ult. (kN)	English Ult. (lbs)	Metric Area (mm^2)	English Area (in^2)	Metric Mass (kg/m)	English Weight (lb/ft)
9.53	3/8	102.3	23,000	54.84	0.085	0.432	0.290
11.11	7/16	137.9	31,000	74.19	0.115	0.582	0.390
12.70	1/2	183.7	41,300	98.71	0.153	0.775	0.520
15.24	0.600	260.7	58,600	140.0	0.217	1.102	0.740

Figure 3.91.6.2B

A3.91.7 Miscellaneous Common Conversions

	Inch-Pound	Metric
Dead Loads:		
Future Wearing Surface	25 psf	1.2 kN/m^2
Reinforced Concrete	150 pcf	23.6 kN/m^3
Soil	120 pcf	18.9 kN/m^3
Material Strengths:		
Concrete (f'c)	3300 psi	25 MPa
	4000 psi	30 MPa
	4500 psi	35 MPa
	5000 psi	35 MPa
	5500 psi	40 MPa
	6000 psi	45 MPa
	6500 psi	45 MPa
	7000 psi	50 MPa
Reinforcing Steel:		
Grade 40	40 ksi	300 MPa
Grade 60	60 ksi	420 MPa
Structural Steel:		
Grade 36	36 ksi	250 MPa
Grade 50	50 ksi	345 MPa
Grade 70	70 ksi	480 MPa
Reinforcing Steel Clearances	1.0 in	25 mm
	1.5 in	40 mm
	2.0 in	50 mm
	2.5 in	65 mm
	3.0 in	75 mm
	4.0 in	100 mm
Aggregate sizes	1-1/2 in	37.5 mm
	1 in	25.4 mm
	3/4 in	19.0 mm
Deck Concrete	4500 psi	Class 30 (4350 psi)
End Panel Concrete	3300 or 4500 psi	Class 30 (4350 psi)
Minor Structure Concrete	3000 psi	Class 20 (2900 psi)