STATE OF ALASKA

TONY KNOWLES, GOVERNOR

DEPARTMENT OF TRANSPORTATION AND PUBLIC FACILITIES

STATEWIDE DESIGN & ENGINEERING SERVICES DIVISION
BRIDGE SECTION

3132 CHANNEL DRIVE
JUNEAU, ALASKA 99801-7898
PHONE: (907)465-2975
TEXT: (907)465-3652
FAX: (907)465-6947

September 7, 1999

Mark Hirota, P.E.
Oregon State Department of Transportation
Bridge Engineering Section
301 Transportation Building
Salem, Oregon 97310

Dear Mr. Hirota:

The second series of crash tests of the Oregon Two-Tube/Alaska Multi-State Transition Rail has been completed and we have distributed the results to the sponsor states. On September 2, 1999, we received approval from the FHWA Director of the Office of Highway Safety Infrastructure, Dwight Horne. The acceptance letter is enclosed. Like the bridge railing system, this transition has been approved for use on the entire National Highway System, in all 50 states.

The complete set of test results will soon be available on our webpage for viewing and printing.

If you have any questions or comments, please do not hesitate to contact me. Thank you for your participation in this project.

Sincerely,

Steven O. Bradford, P.E.
Chief Bridge Engineer

Enclosure

RECEIVED
SEP 10 1999
BRIDGE SECTION

printed on recycled paper by C.D.

U.S. Department
of Transportation

**Federal Highway
Administration**

400 Seventh St., S.W.
Washington, D.C. 20590

September 2, 1999

Refer to: HMHS-B55A

Steven O. Bradford, P.E.
Chief Bridge Engineer
Alaska Department of Transportation
and Public Facilities
3132 Channel Drive
Juneau, AK 99801-7898

RECEIVED
SEP 07 1999
BRIDGE DESIGN SECTION

Added as Appendix 1

Dear Mr. Bradford:

My May 18 letter to you accepted the Alaska Multi-State Bridge Rail as a National Cooperative Highway Research Program (NCHRP) Report 350 test level 4 (TL-4) design.
On August 6, you requested that a transition design for this bridge railing also be accepted by the Federal Highway Administration at TL-4. To support your request, you also sent copies of two July 1999 reports prepared by the Texas Transportation Institute, "NCHRP Report 350 Test 4-21 of the Alaska Multi-State Bridge Rail Thrie-Beam Transition" and "NCHRP Report 350 Test 4-22 of the Alaska Multi-State Bridge Rail Thrie-Beam Transition" and videotapes showing the two tests that were conducted.

As shown in detail in Enclosure 1, the transition consists of nested 12-gage Thrie-beam panels supported by three 1982-mm long W150x13.5 steel posts on 953 mm centers followed by six 1982-mm long W150x13.5 steel posts spaced on 476 mm centers. All posts are set 1245 mm into the soil. The post immediately adjacent to the first bridge rail post is offset 1145 mm from the first bridge rail post. The Thrie-beam is connected to the bridge rail using a standard Thrie-beam Terminal Connector bolted to a special connection plate made from 10-mm and 13-mm thick steel plate and 10-mm and 6.35-mm thick steel angles. The concrete curb was flared back 114 mm over its last 457 mm to minimize wheel snagging at that point.

Based on staff review of the test reports and the videotapes, I concur that the transition design meets all appropriate evaluation criteria for a TL-4 design and it may be used in conjunction with your Multi-State Bridge Rail on the National Highway System when such use is requested by a transportation agency. I understand that the design, like the bridge rail, is nonproprietary and that copies of detailed plans and specifications can be obtained directly from you upon request.

Sincerely yours,

Dwight A. Horne

Dwight A. Horne
Director, Office of Highway Safety Infrastructure

2 Enclosures

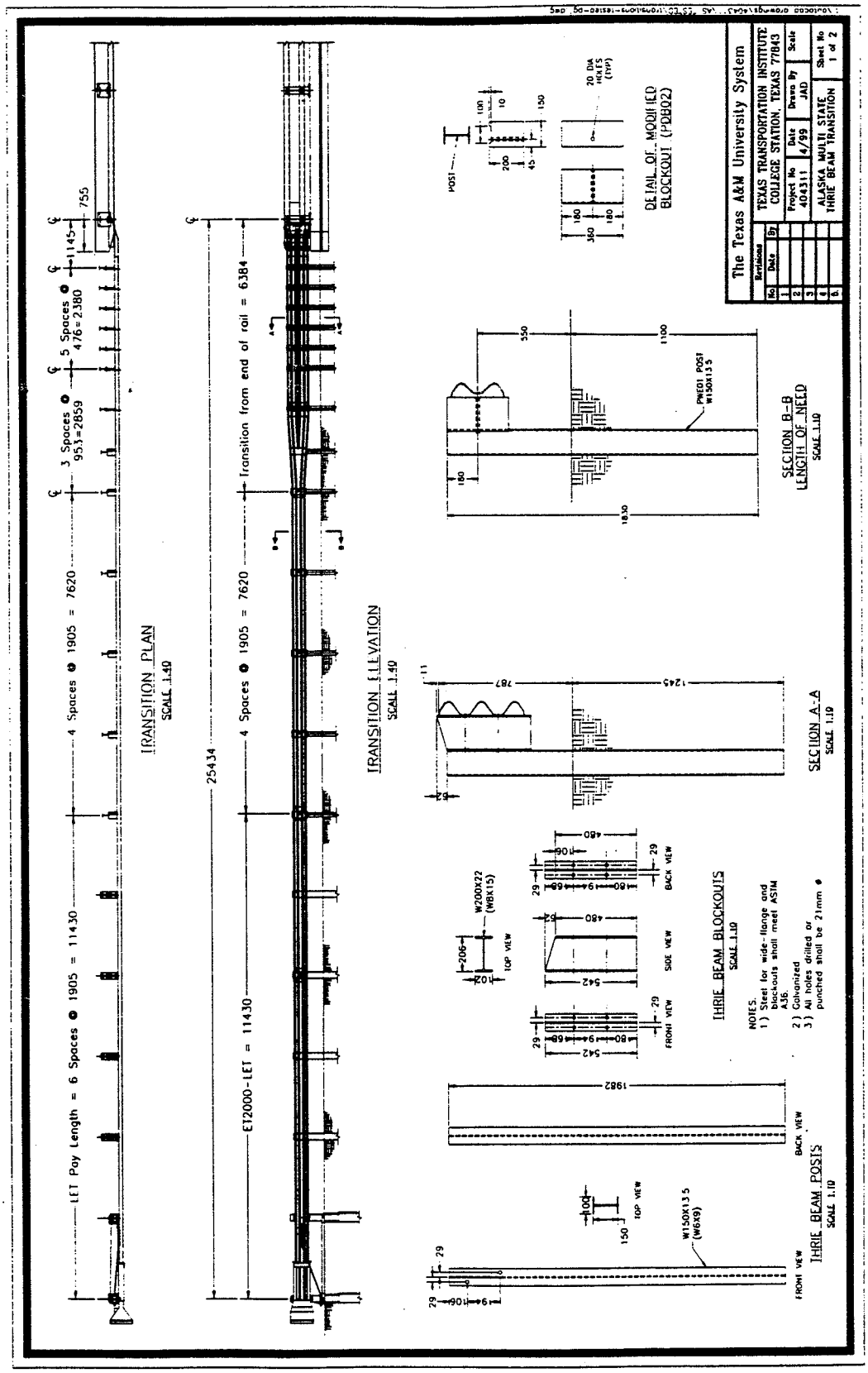

Figure 1. Details of the Alaska Multi-State Bridge Rail Thrie-Beam Transition.

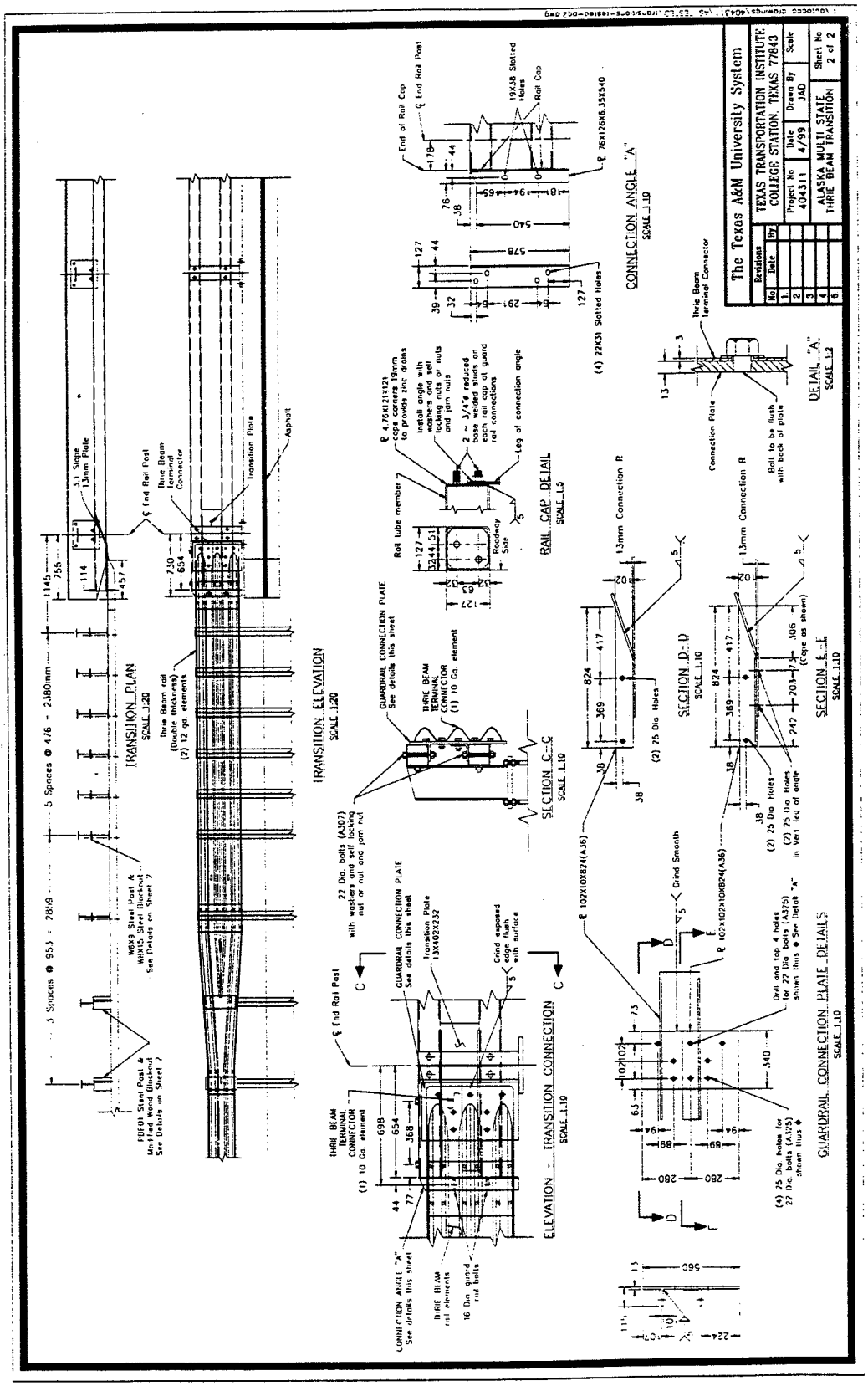

Figure 2. Details of the bridge rail connection of Alaska Multi-State Bridge Rail Thrie-Beam Transition.

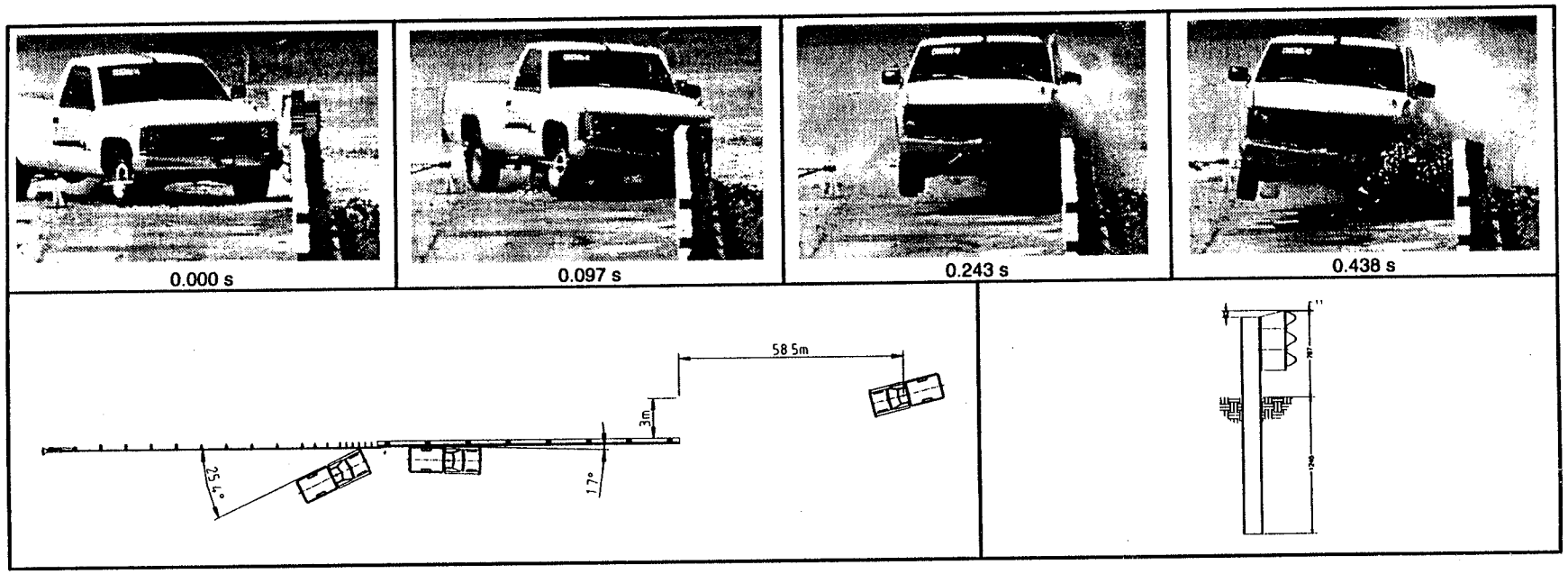

General Information
- Test Agency ..... Texas Transportation Institute
- Test No. 404311-5
- Date 06/01/99

Test Article
- Type ..... Transition
- Name ..... Alaska Multi-State Thrie Beam Transition
- Installation Length (m) 25.4
- Material or Key Elements ... Thrie Beam Attached to Alaska Multi-State Bridge Rail

Soil Type and Condition .... Standard Soil, Dry

Test Vehicle
- Type ..... Production
- Designation 2000P
- Model ..... 1994 Chevrolet 2500 pickup truck
- Mass (kg)
  - Curb 1982
  - Test Inertial 2000
  - Dummy ..... No dummy
  - Gross Static 2000

Impact Conditions
- Speed (km/h) 100.6
- Angle (deg) 25.4

Exit Conditions
- Speed (km/h) 75.6
- Angle (deg) 1.7

Occupant Risk Values
- Impact Velocity (m/s)
  - x-direction 7.4
  - y-direction 7.6
- THIV (km/h) 35.0
- Ridedown Accelerations (g's)
  - x-direction 9.5
  - y-direction 9.6
- PHD (g's) 12.7
- ASI 1.84
- Max. 0.050-s Average (g's)
  - x-direction ..... -11.4
  - y-direction 14.4
  - z-direction ..... -6.2

Test Article Deflections (m)
- Dynamic 0.131
- Permanent 0.50

Vehicle Damage
- Exterior
  - VDS 11LFQ4
  - CDC ..... 11FLEK3 & 11LDEW3
- Maximum Exterior Vehicle Crush (mm) 570
- Interior
  - OCDI LF02020001
- Max. Occ. Compart. Deformation (mm) 130

Post-Impact Behavior (during 1.0 s after impact)
- Max. Yaw Angle (deg) 28
- Max. Pitch Angle (deg) ..... -4
- Max. Roll Angle (deg) ..... -7

Figure 11. Summary of Results for test 404311-5, *NCHRP Report 350* test 4-21.

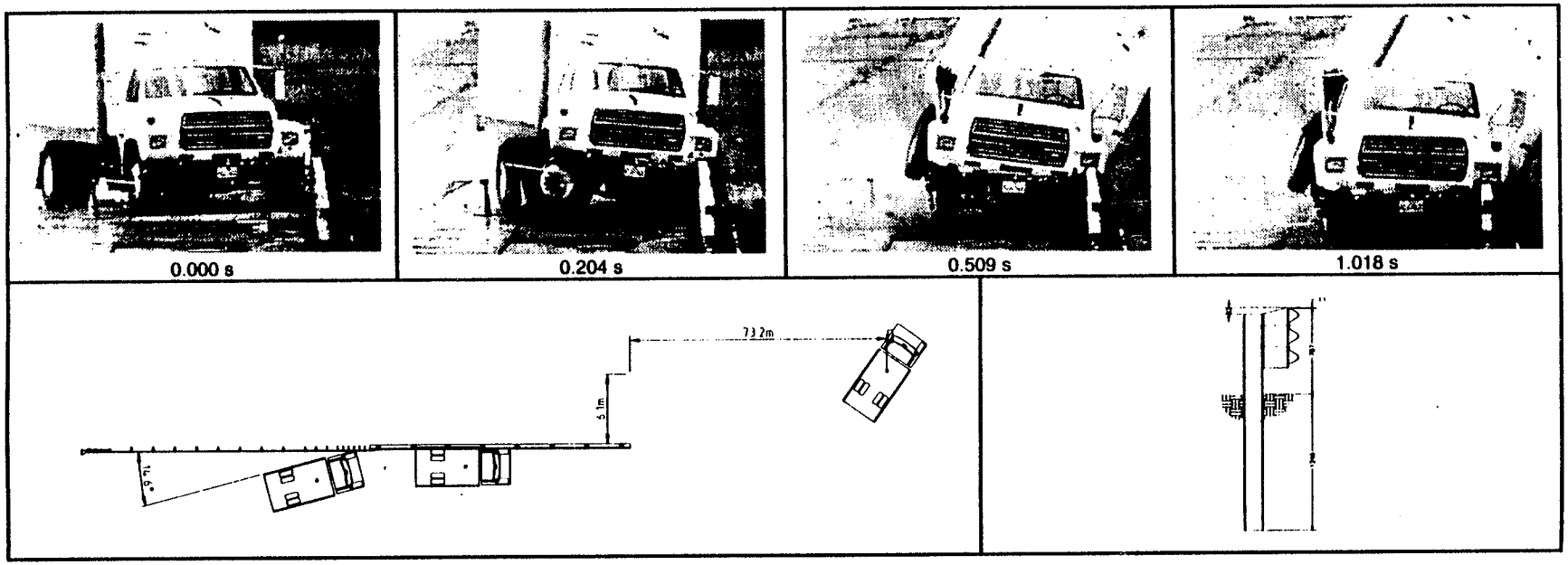

General Information
- Test Agency ..... Texas Transportation Institute
- Test No. 404311-6
- Date 06/16/99

Test Article
- Type ..... Transition
- Name or Manufacturer ..... Alaska Multi-State Thrie Beam Transition
- Installation Length (m) 25.4
- Material or Key Elements ... Thrie Beam Attached to Alaska Multi-State Bridge Rail Transition

Soil Type and Condition .... Standard Soil, Dry

Test Vehicle Production
- Type 8000S
- Designation ..... 1986 Ford F700 single-unit truck
- Model .....
- Mass (kg) 5135
  - Curb 8000
  - Test Inertial ..... No dummy
  - Dummy 8000
  - Gross Static .....

Impact Conditions
- Speed (km/h) 49.9
- Angle (deg) 14.6

Exit Conditions
- Speed (km/h) 65.4
- Angle (deg) ..... approx. 1

Occupant Risk Values
- Impact Velocity (m/s)
  - x-direction 3.2
  - y-direction ..... -3.4
- THIV (km/h) 13.8
- Ridedown Accelerations (g's)
  - x-direction ..... -2.4
  - y-direction 3.8
- PHD (g's) 4.0
- ASI 0.34
- Max. 0.050-s Average (g's)
  - x-direction ..... -2.0
  - y-direction 3.0
  - z-direction ..... -1.9

Test Article Deflections (m)
- Dynamic 0.077
- Permanent 0.049

Vehicle Damage
- Exterior
  - VDS ..... N/A
  - CDC ..... N/A
- Maximum Exterior Vehicle Crush (mm) ..... N/A
- Interior
  - OCDI FS0000000
- Max. Occ. Compart. Deformation (mm) ..... N/A

Post-Impact Behavior (during 1.0 s after impact)
- Max. Yaw Angle (deg) 16
- Max. Pitch Angle (deg) ..... -5
- Max. Roll Angle (deg) ..... -10

Figure 11. Summary of results for test 404311-6, *NCHRP Report 350* test 4-22.

APPENDIX 1

May 18, 1999

Refer to: HMHS-B55

Mr. Steven O. Bradford, PE
Chief Bridge Engineer
Alaska Department of Transportation and
Public Facilities
3132 Channel Drive
Juneau, Alaska 99801-7898

Dear Mr. Bradford:

In your April 14 letter to me, you requested the Federal Highway Administration's acceptance of a curb-mounted, two-tube bridge railing that was tested to NCHRP Report 350 test level 4 (TL-4). To support your request, you sent me three Texas Transportation Institute (TTI) reports prepared by Buth, Williams, Menges, and Schoeneman. These were entitled "NCHRP REPORT 350 TEST 4-10 OF THE ALASKA MULTI-STATE BRIDGE RAIL" and "NCHRP REPORT 350 TEST 4-11 OF THE ALASKA MULTI-STATE BRIDGE RAIL", both dated December 1998, and "NCHRP REPORT 350 TEST 4-12 OF THE ALASKA MULTI-STATE BRIDGE RAIL", dated February 1999. You also sent video tapes of the crash tests that were conducted by TTI.

The Alaska Multi-State Bridge Railing consists of two TS 127 x 127 x 7.9 tubes supported by W200x36 posts on 3050-mm centers set on a 180-mm high curb. The centerline of the lower rail is 410 mm above the riding surface and the centerline of the top rail is 765 mm above the deck. Total rail height is 830 mm. These and other details are shown in Enclosure 1. We have reviewed the test reports and the video tapes and agree that each test met the appropriate Report 350 evaluation criteria . Summary reports of these tests are included as Enclosure 2.

Based on our review of the information you submitted, we conclude that the Alaska Multi-State Bridge Rail is acceptable for use on the National Highway System at NCHRP Report 350 test level 4 when such use is specified by a contracting agency. We understand that the design is non-proprietary and assume that other agencies desiring complete plans and material specifications can obtain those directly from you upon request.

Sincerely yours,

(original signed by Dwight A. Horne)

Dwight A. Horne
Director, Office of Highway Safety Infrastructure

2 Enclosures

File: B-55 (AK 2-tube)

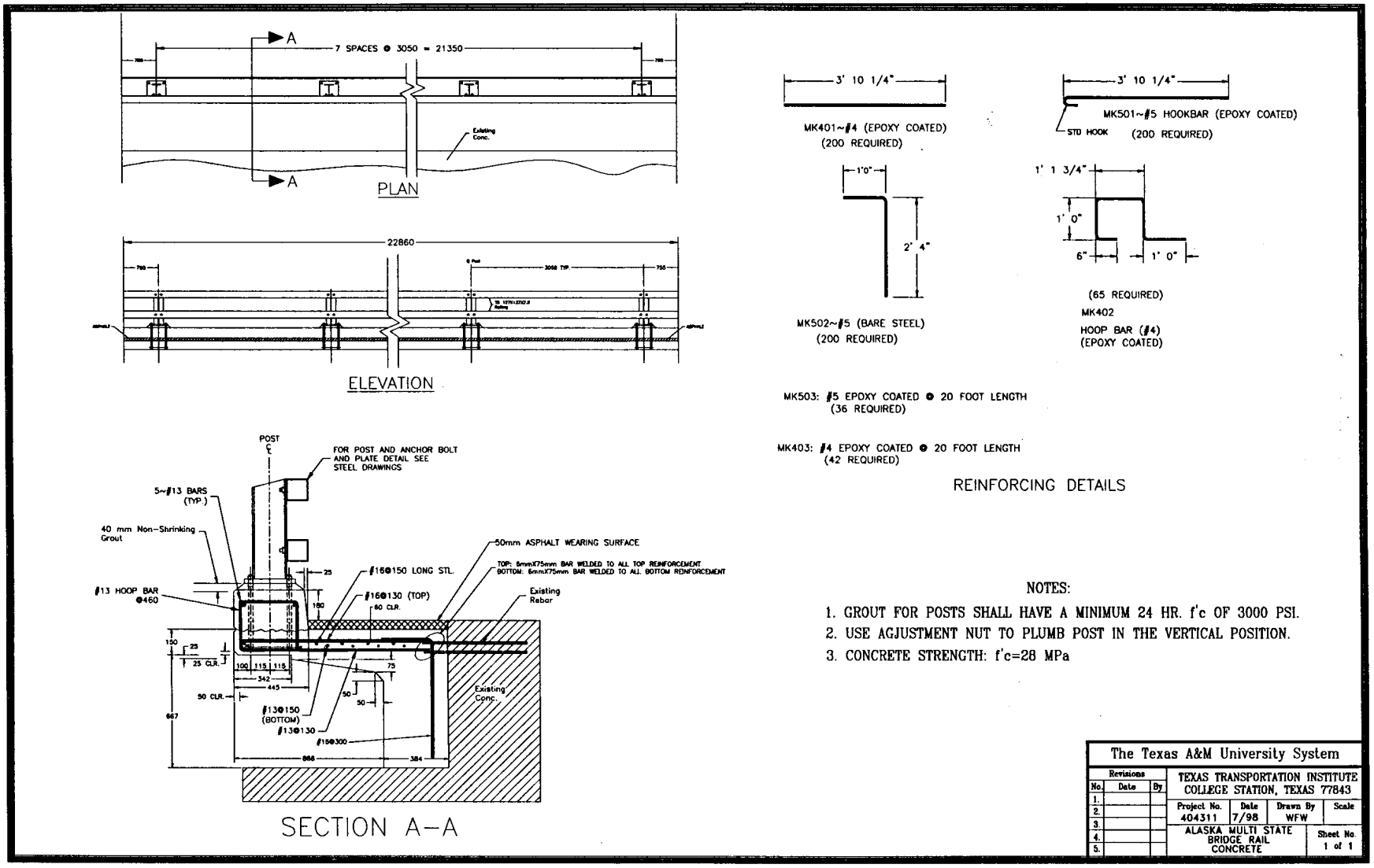

Figure 1. Details of the Alaska Multi-State Bridge Railing mounted on the curb (concrete).

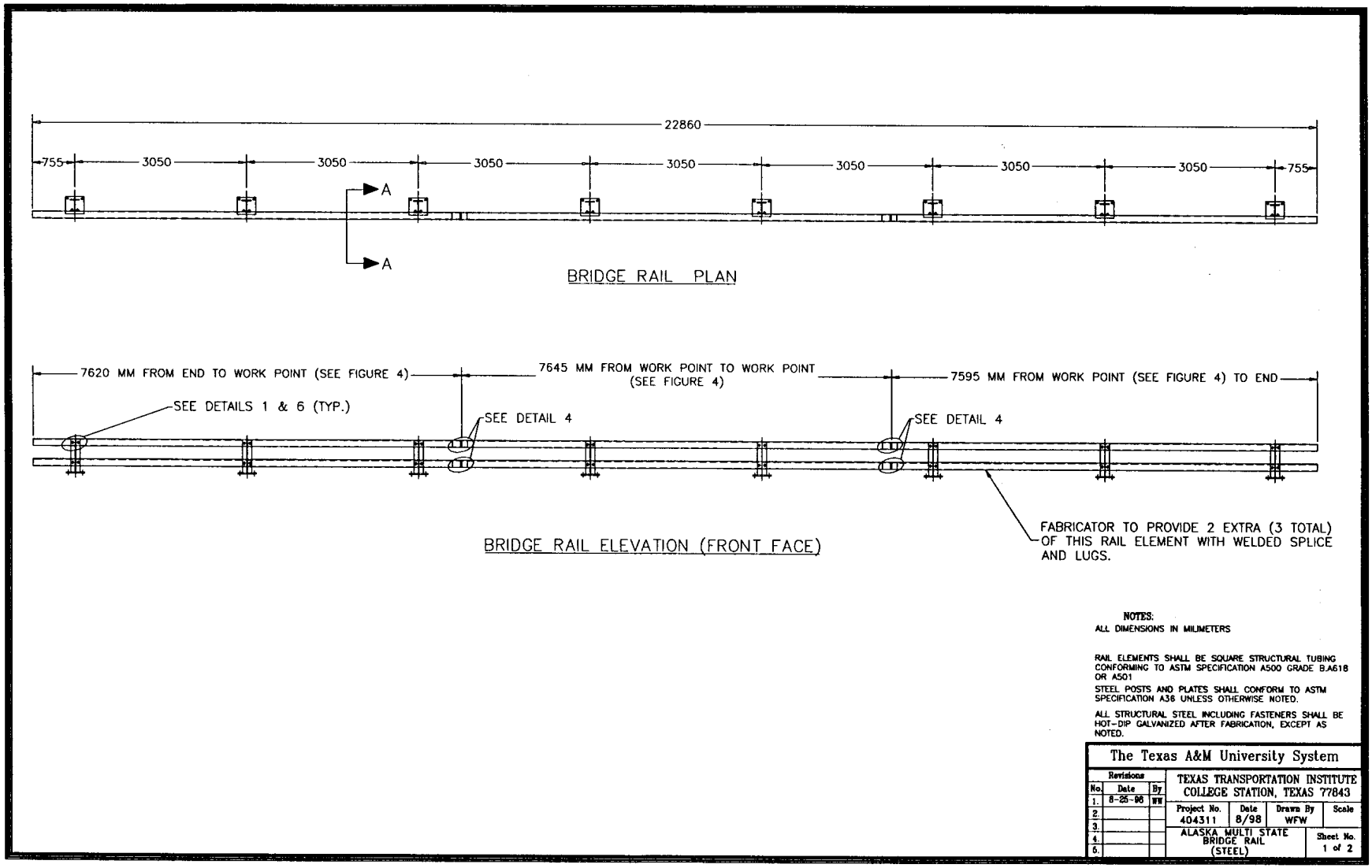

Figure 2. Details of the Alaska Multi-State Bridge Railing mounted on the curb (steel).

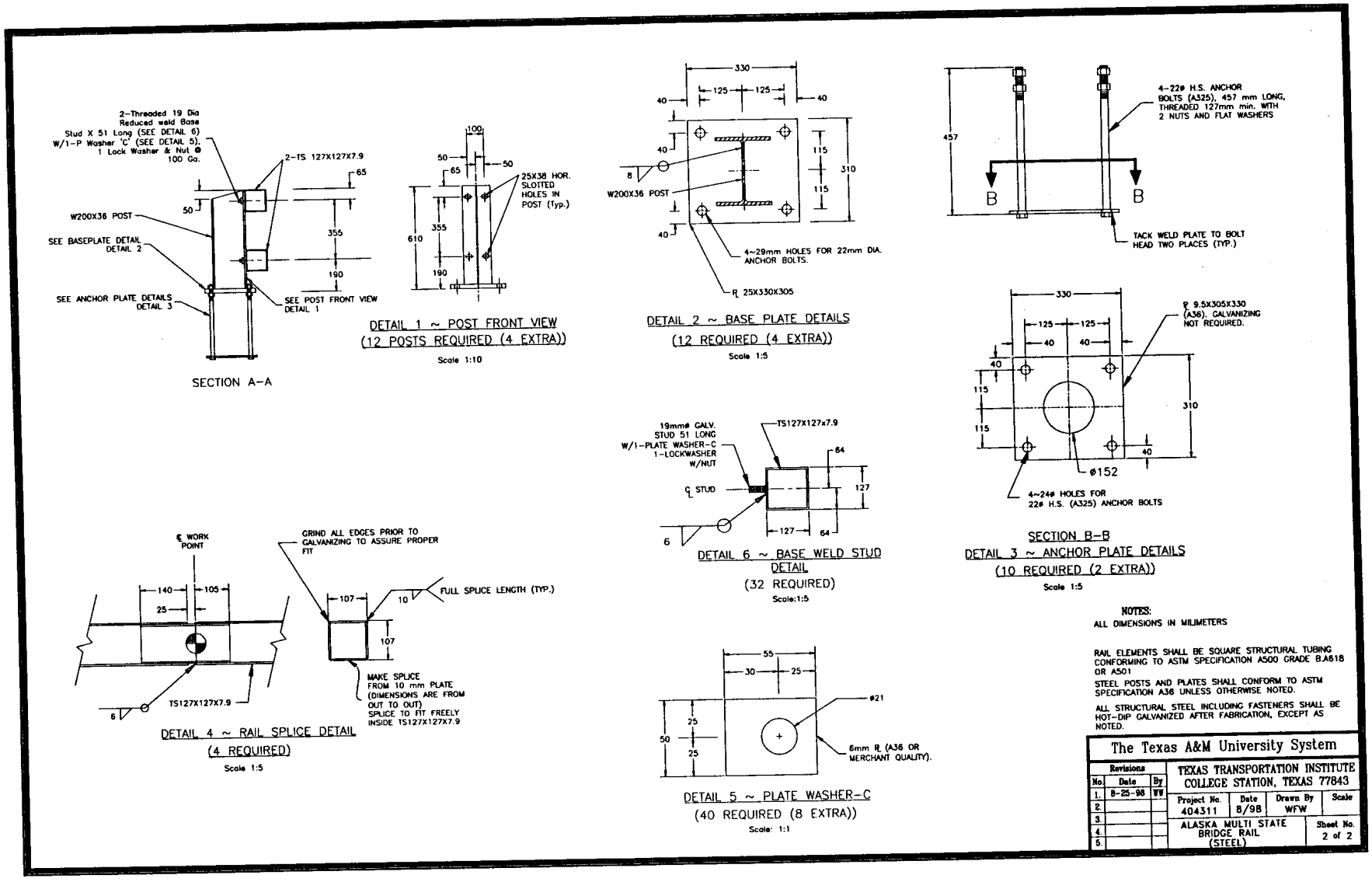

Figure 2. Details of the Alaska Multi-State Bridge Railing mounted on the curb (steel) (continued).

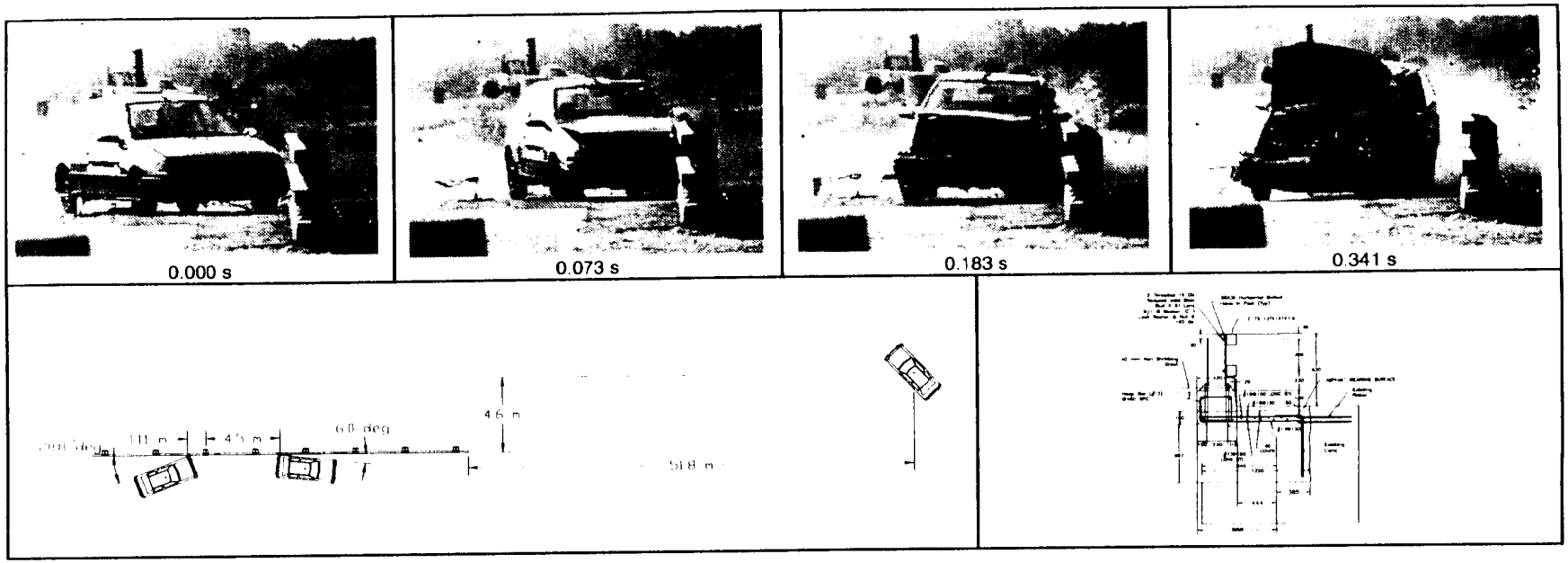

General Information
- Test Agency . . . . . Texas Transportation Institute
- Test No. 404311-1
- Date 10/12/98

Test Article
- Type . . . . . Bridge Rail
- Name or Manufacturer . . . . . Alaska Bridge Rail
- Installation Length (m) 22.9
- Material or Key Elements . . . Tubular Steel Rail Elements on Steel Wide Flange Posts on Curb

Soil Type and Condition . . . . Concrete deck, Dry

Test Vehicle
- Type . . . . . Production
- Designation 820C
- Model . . . . . 1993 Geo Metro
- Mass (kg)
  - Curb 758
  - Test Inertial 820
  - Dummy 76
  - Gross Static 896

Impact Conditions
- Speed (km/h) 100.0
- Angle (deg) 20.8

Exit Conditions
- Speed (km/h) 86.7
- Angle (deg) 6.0

Occupant Risk Values
- Impact Velocity (m/s)
  - x-direction 4.7
  - y-direction . . . . . -8.3
- THIV (km/h) 31.4
- Ridedown Accelerations (g's)
  - x-direction . . . . . -4.4
  - y-direction 13.4
- PHD (g's) 14.5
- ASI 1.80
- Max. 0.050-s Average (g's)
  - x-direction . . . . . -8.6
  - y-direction 15.0
  - z-direction 3.9

Test Article Deflections (m)
- Dynamic . . . . . nil
- Permanent . . . . . nil

Vehicle Damage
- Exterior
  - VDS 11LFQ4
  - CDC . . . . . 11FLEK2 & 11LYEW3
- Maximum Exterior Vehicle Crush (mm) 200
- Interior
  - OCDI LF0012100
- Max. Occ. Compart. Deformation (mm) 47

Post-Impact Behavior
(during 1.0 s after impact)
- Max. Yaw Angle (deg) 31
- Max. Pitch Angle (deg) . . . . . -4
- Max. Roll Angle (deg) . . . . . -11

Figure 11. Summary of results for test 404311-1, NCHRP Report 350 test 4-10.

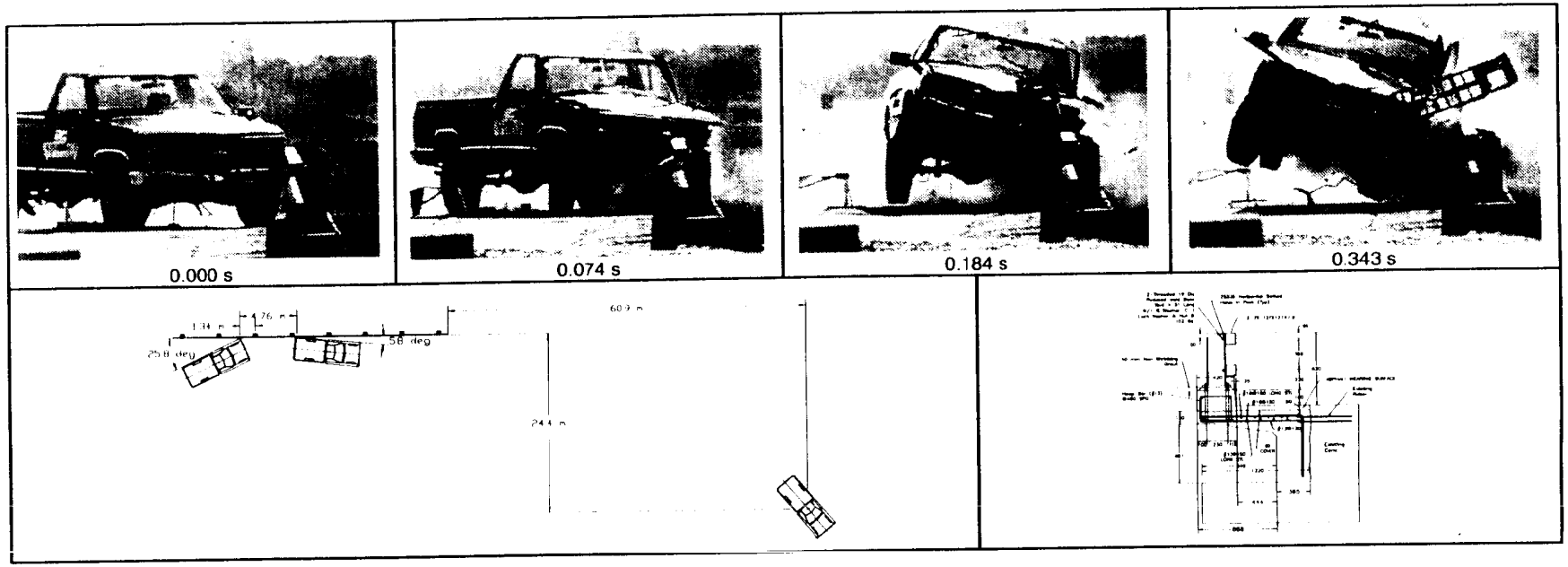

General Information
- Test Agency ..... Texas Transportation Institute
- Test No. 404311-2
- Date 10/14/98

Test Article
- Type ..... Bridge Rail
- Name ..... Alaska Bridge Rail
- Installation Length (m) ..... xx.x
- Material or Key Elements ... Tubular Steel Rail Elements on Steel Wide Flange Posts on Curb

Soil Type and Condition .... Concrete deck, Dry

Test Vehicle
- Type ..... Production
- Designation 2000P
- Model ..... 1995 Chevrolet 2500 Pickup Truck
- Mass (kg)
  - Curb 2104
  - Test Inertial 2000
  - Dummy ..... No dummy
  - Gross Static 2000

Impact Conditions
- Speed (km/h) 100.7
- Angle (deg) 25.8

Exit Conditions
- Speed (km/h) 84.9
- Angle (deg) 5.8

Occupant Risk Values
- Impact Velocity (m/s)
  - x-direction 6.1
  - y-direction ..... -7.4
- THIV (km/h) 29.8
- Ridedown Accelerations (g's)
  - x-direction ..... -6.9
  - y-direction 6.1
- PHD (g's) 12.0
- ASI 1.66
- Max. 0.050-s Average (g's)
  - x-direction ..... -8.2
  - y-direction 13.8
  - z-direction ..... -6.4

Test Article Deflections (m)
- Dynamic ..... N/A
- Permanent 0.04

Vehicle Damage
- Exterior
  - VDS 11LFQ5
  - CDC ..... 11FYEK3 &11LYEW3
- Maximum Exterior Vehicle Crush (mm) 540
- Interior
  - OCDI LF1112000
- Max. Occ. Compart. Deformation (mm) 115

Post-Impact Behavior
(during 1.0 s after impact)
- Max. Yaw Angle (deg) 40
- Max. Pitch Angle (deg) ..... -5
- Max. Roll Angle (deg) ..... -21

Figure 11. Summary of results for test 404311-2, *NCHRP Report 350* test 4-11.

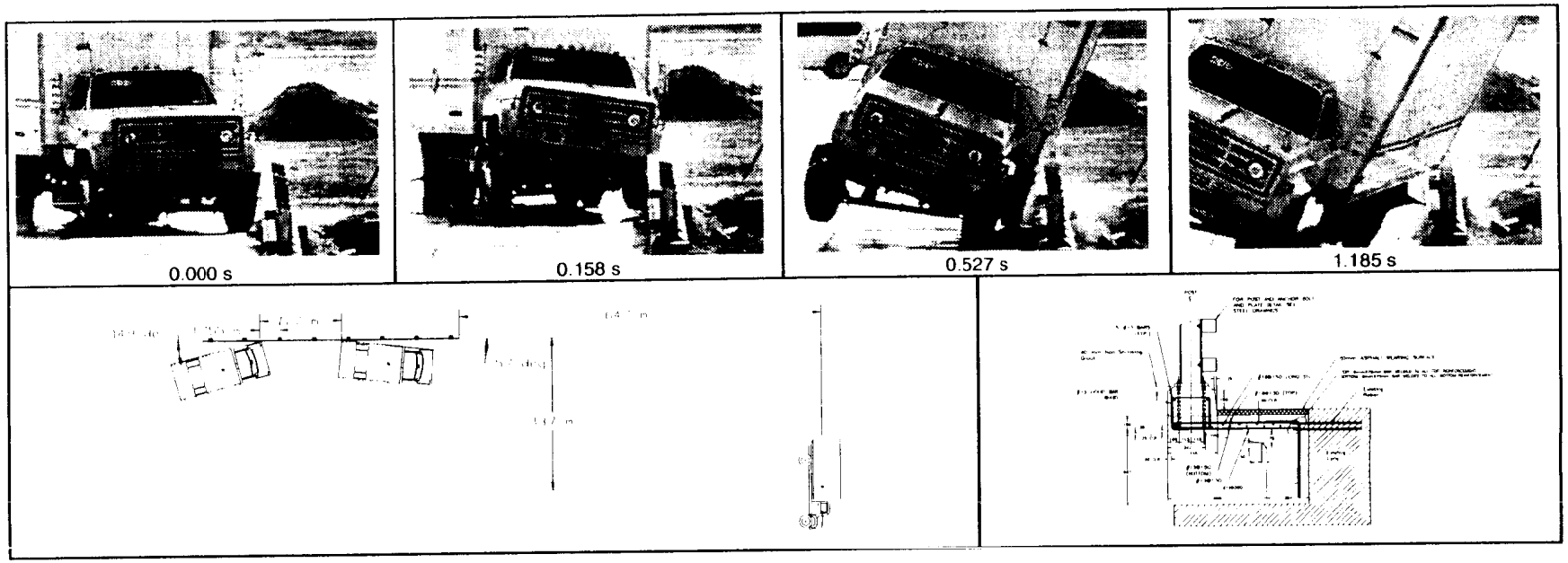

General Information
- Test Agency ..... Texas Transportation Institute
- Test No. 404311-3
- Date 01/07/99

Test Article
- Type ..... Bridge Rail
- Name or Manufacturer ..... Alaska Bridge Rail
- Installation Length (m) 22.9
- Material or Key Elements ... Tubular Steel Rail Elements on Steel Wide Flange Posts on Curb

Soil Type and Condition .... Standard soil, dry

Test Vehicle
- Type ..... Production
- Designation 8000S
- Model ..... 1987 GMC single-unit truck
- Mass (kg)
  - Curb 5384
  - Test Inertial 8000
  - Dummy ..... No Dummy
  - Gross Static 8000

Impact Conditions
- Speed (km/h) 78.7
- Angle (deg) 14.9

Exit Conditions
- Speed (km/h) 57.6
- Angle (deg) 5.7

Occupant Risk Values
- Impact Velocity (m/s)
  - x-direction 2.3
  - y-direction 3.5
- THIV (km/h) 14.8
- Ridedown Accelerations (g's)
  - x-direction ..... -2.5
  - y-direction 10.9
- PHD (g's) 11.0
- ASI 0.51
- Max. 0.050-s Average (g's)
  - x-direction 1.7
  - y-direction 4.5
  - z-direction ..... -1.5

Test Article Deflections (m)
- Dynamic ..... N/A
- Permanent 0.005

Vehicle Damage
- Exterior
  - VDS ..... N/A
  - CDC ..... N/A
- Maximum Exterior Vehicle Crush (mm) 150
- Interior
  - OCDI FS0000000
- Max. Occ. Compart. Deformation (mm) 0

Post-Impact Behavior
(during 1.0 s after impact)
- Max. Yaw Angle (deg) 24
- Max. Pitch Angle (deg) 3
- Max. Roll Angle (deg) ..... -33

Figure 10. Summary of results for test 404311-3, NCHRP Report 350 test 4-12.

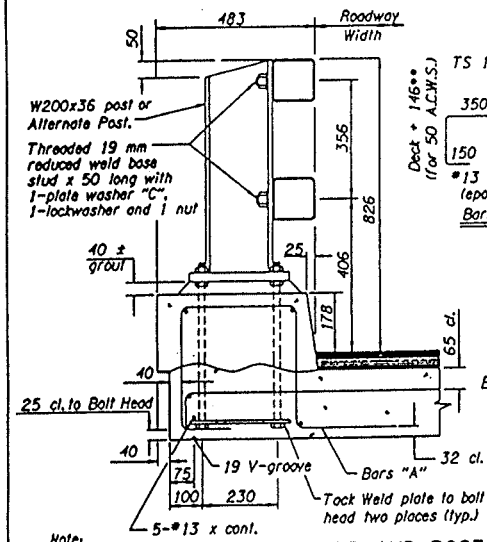

Note:
Set top of post 826 above finish grade. Dimension marked thus •• will vary with depth of A.C.W.S.

CURB AND POST DETAILS
No Scale

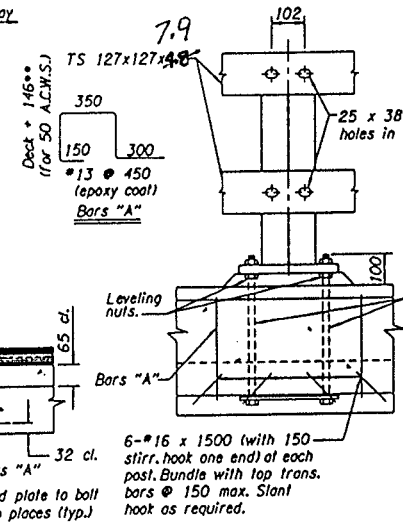

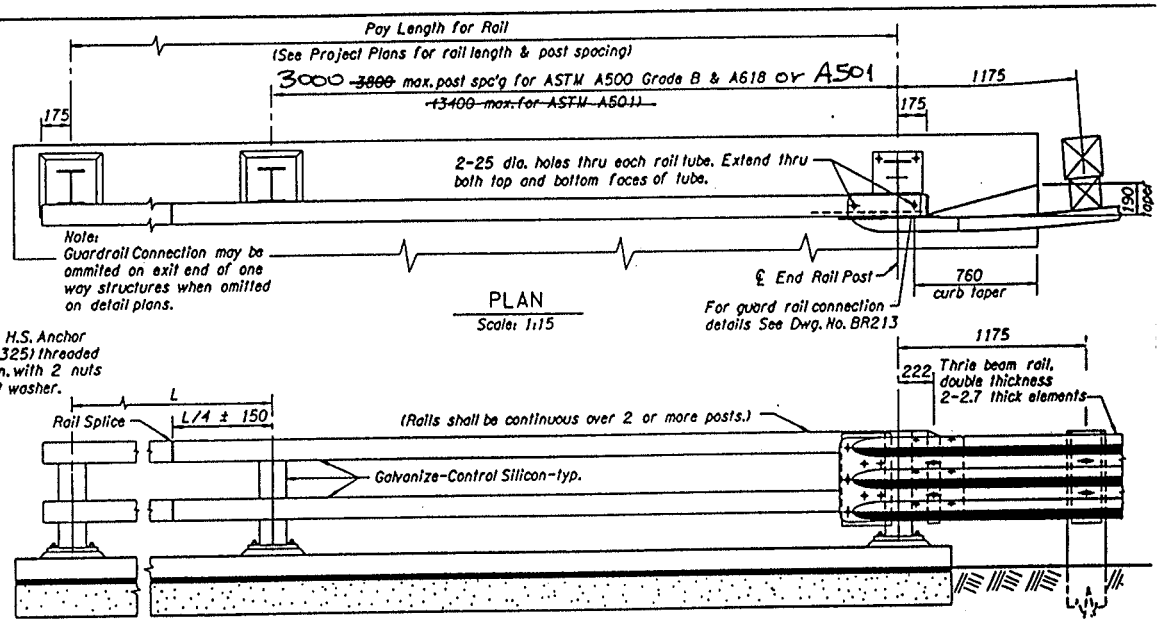

PLAN
Scale: 1:15

ELEVATION
Scale: 1:15

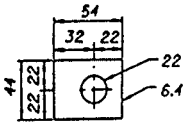

PLATE WASHER-"C"
No Scale

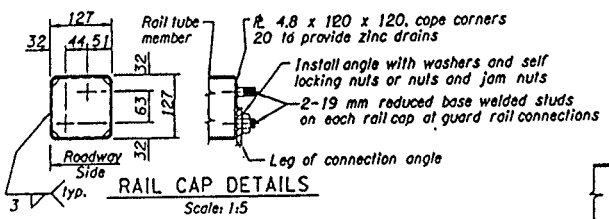

RAIL CAP DETAILS
Scale: 1:5

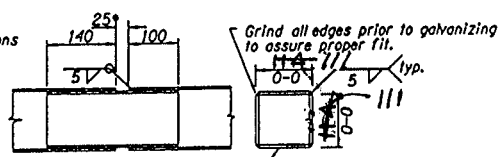

•Note:
25 gap unless noted otherwise on detail plans. Rail Splice will be needed in panel that has a deck expansion joint.

RAIL SPLICE DETAILS
Scale: 1:5

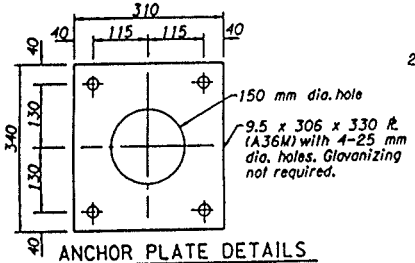

ANCHOR PLATE DETAILS
Scale: 1:5

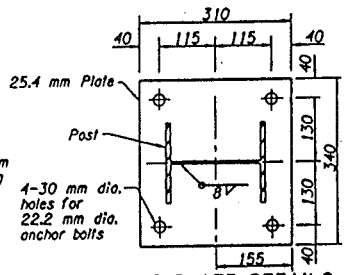

BASE PLATE DETAILS
Scale: 1:5

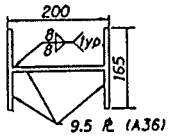

ALTERNATE POST
Scale: 1:5

GENERAL NOTES

Rail elements shall be square structural tubing conforming to ASTM Specification A500 grade B, A618 or A501.

Steel posts and plates shall conform to AASHTO Specification M183M (ASTM A36M) unless otherwise noted.

Railing shall be fabricated to the horizontal and vertical alignment of the structure. Posts shall be normal to grade.

Payment for the railing will include compensation for furnishing and installing the necessary guardrail connection plates and terminal connectors.

All structural steel including fastners shall be hot-dip galvanized after fabrication, except as noted. Galvanized-Control Silicon means silicon content of 0 to 0.04% or 0.15% to 0.25%.

NOTE: All dimensions are in millimeters (mm) except as noted.

	DATE	REVISION	BY
1	8/96	Convert to soft metric rebar	GCP
2	1/97	Soft metric steel & bolts	GCP
3	5/98	Correct plate dimensions	GCP

DRAFTED: Jeffrey Lannigan
CHECKED: Glenn D. Abernathy
DESIGNED: Arthur T. Blochly, P.E. No. 4964

REVIEWED — REGISTERED PROFESSIONAL ENGINEER — Gary C. Nelson — EXPIRES 6/30/98

INTERIM BRIDGE ENGINEER — REGISTERED PROFESSIONAL ENGINEER — EXPIRES 6/30/98

OREGON DEPARTMENT OF TRANSPORTATION
BRIDGE ENGINEERING SECTION
STANDARD

ACCOMPANIED BY DWGS. BR213

BRIDGE NO. STANDARD
DATE JAN. 1996
CALC. BOOK ----

STANDARD
2 TUBE CURB MOUNT RAIL

GENERAL DETAILS

METRIC
SHEET 1 OF 2
DRAWING NO. BR206

BR20