Section 8

Drilled Shafts

8.1	Drilled Shaft Equipment	1
	Construction Process	9
	Slurry Construction	11
	Temporary Casing	16
	Construction Documents	19
	Inspection	21
	Spacers	26
	Concreting Operations	32
	Concrete Volumes	43
	Post Construction Activities	48
	Post Construction Testing	51

Typical Drilled Shaft

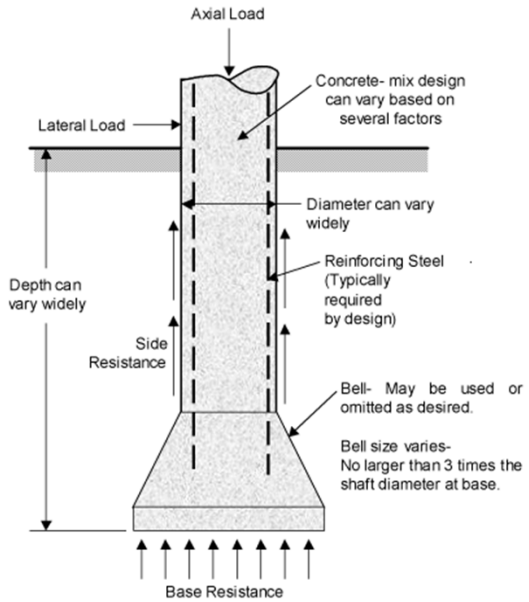

Drilled Shaft Equipment

Crane Mounted Rigs

- Large power units attached to crane
- Elevated rotary table to accommodate drill tools

Drilling Equipment Terminology

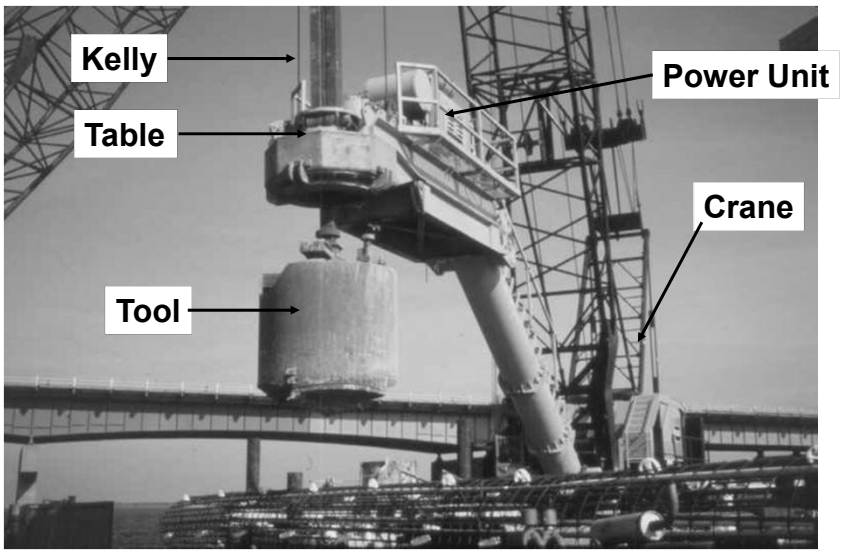

Crawler Mounted Rigs

- Larger rigs capable of 12′ diameter holes and 250′ depth
- Smaller rigs are more maneuverable than other rigs
- Good in low-headroom locations

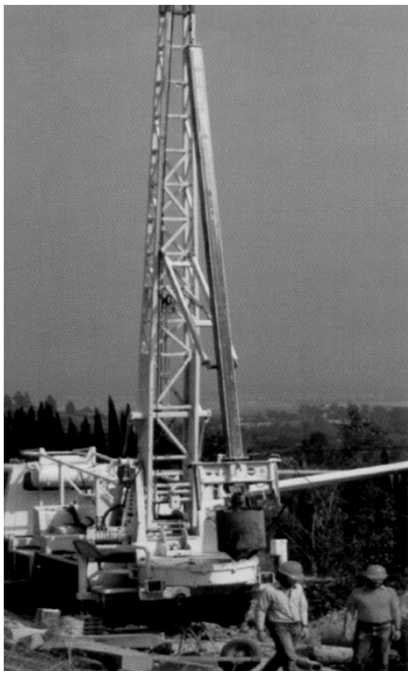

Light Truck Mounted Rigs

- Smaller jobs such as light and signal poles
- Access road required

Auger Bits and Tools

Earth Augers

Single-Flight

Soil Auger

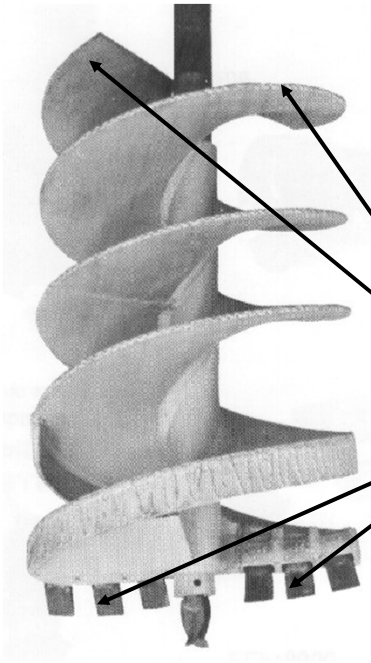

Earth Augers

Double Flight

Double Cut

Drilling Bucket

This is typical of a drilling bucket used in loose sand, gravel and cobbles.

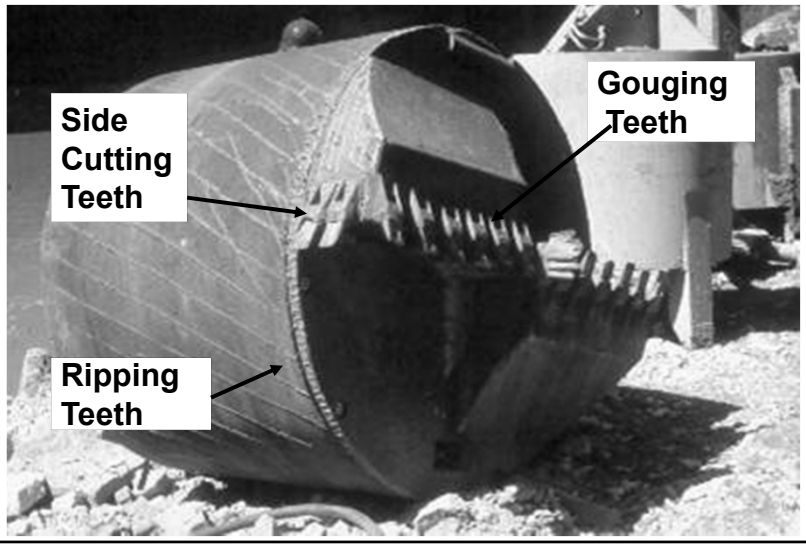

Boulder Bucket and Auger

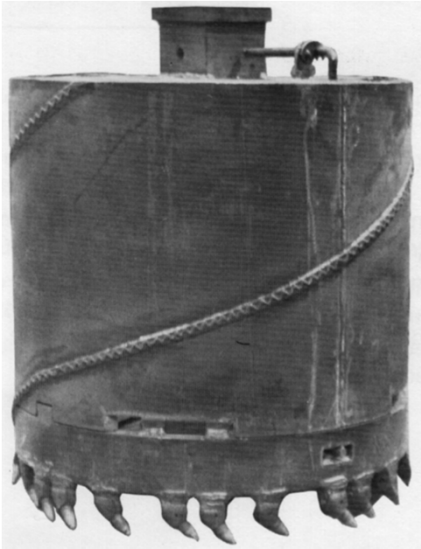

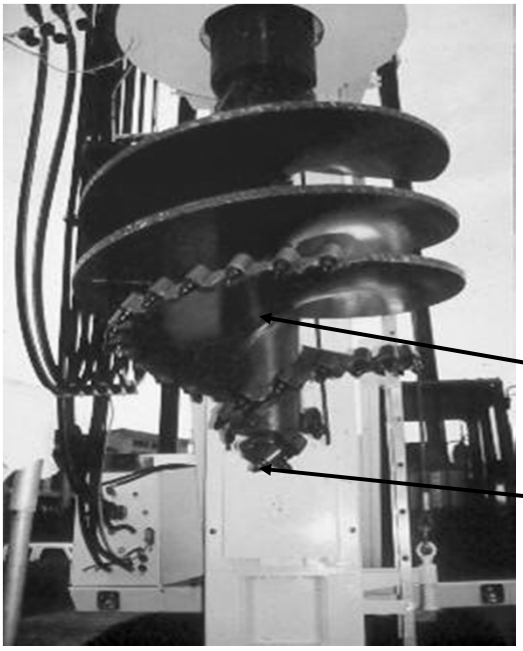

Rock Augers

Rock augers are generally used in soft to hard rock formations.

Tapered Geometry

Conical (Bullet) Carbide Teeth

Rock Bits

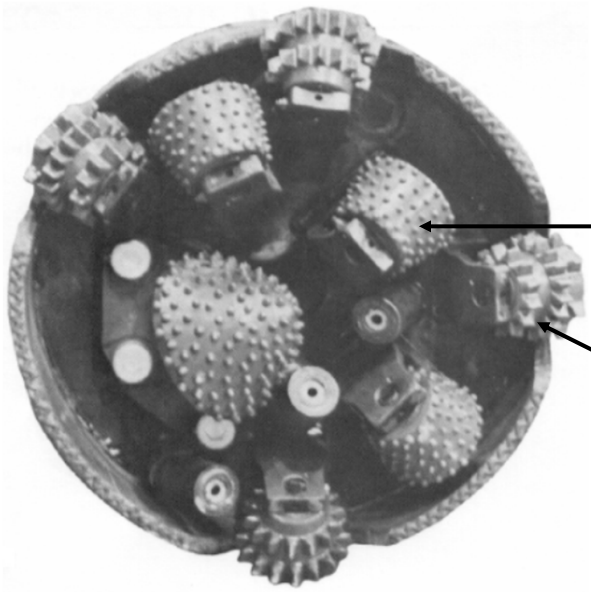

Typical rock bits designed for: Hard to Very Hard Rock.

Circulating bit

Replaceable Roller Bits

Core Barrel

Soft Rock

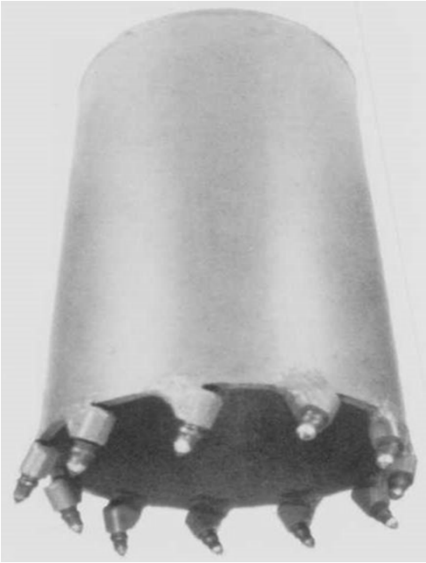

Hard Rock

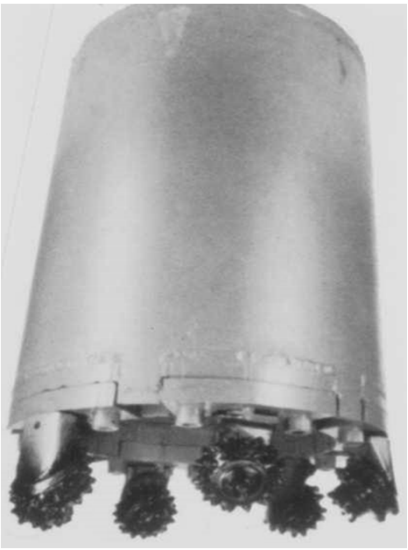

Cleanout (Muck) Bucket

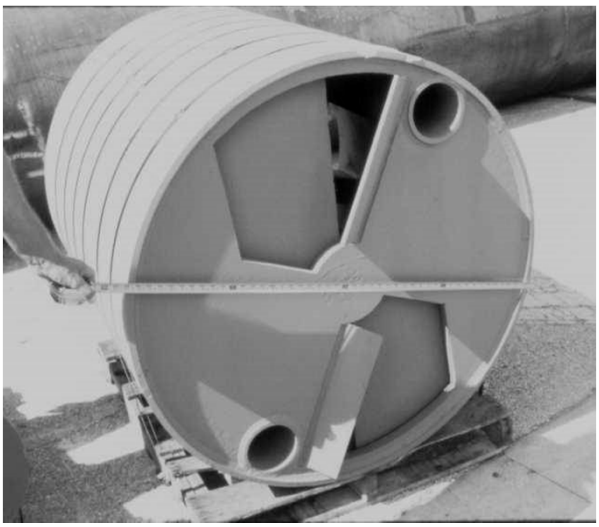

Typical Cleanout (muck) Bucket :

Used to cleanout cuttings & sediments from bottom of the shaft.

Vibratory Hammer Manufacturers

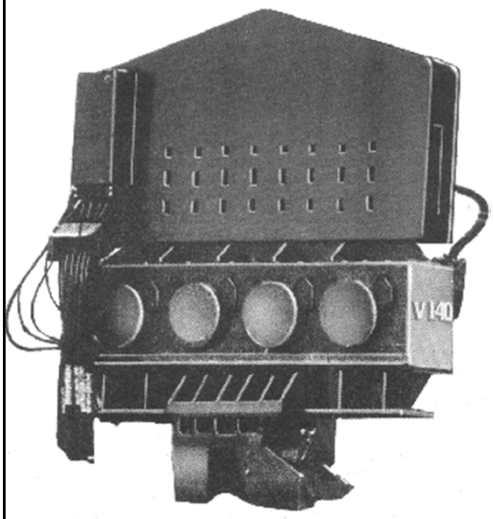

MKT

ICE

Construction Process

Dry Hole 00512.47 (b)

- No more than 3″ of water on bottom of shaft at time of pour.
- Seepage rate of no more than 12″ per hour.
- Shaft diameter is 3′ or more.

Open-Hole Construction Process

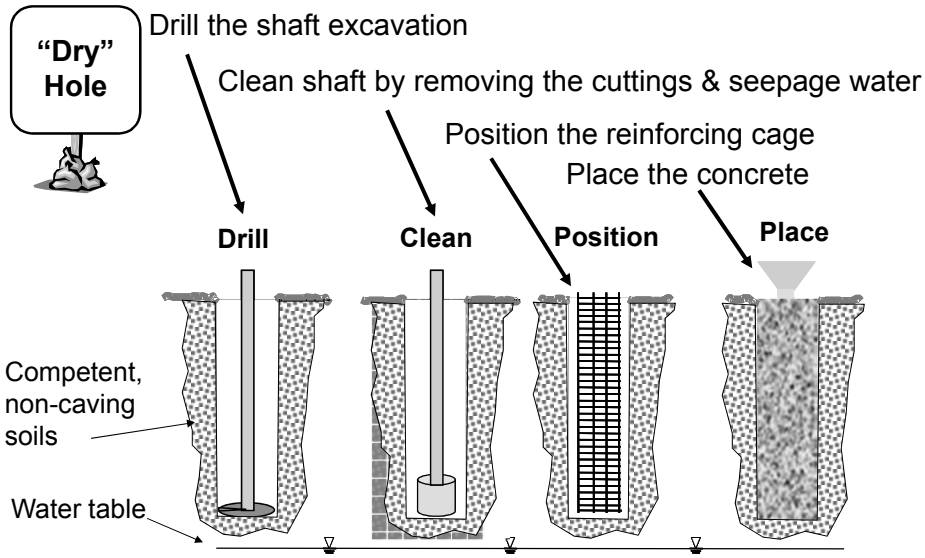

Open-Hole Drilling

Check sides of hole for signs of instability.

Monitor excavated material and compare to reports.

Material Identification During Shaft Excavation

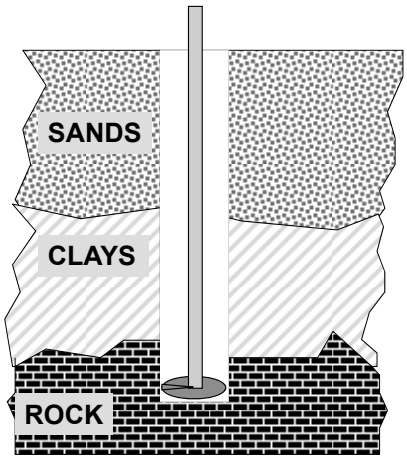

The Inspector should Verify the Excavated Material vs. Anticipated Material by Reviewing the Boring data.

Slurry Construction

Slurry Construction

Slurry is a fluid introduced into the excavation to maintain hole stability.

Clean

Proper cleaning and maintaining of slurry is imperative.

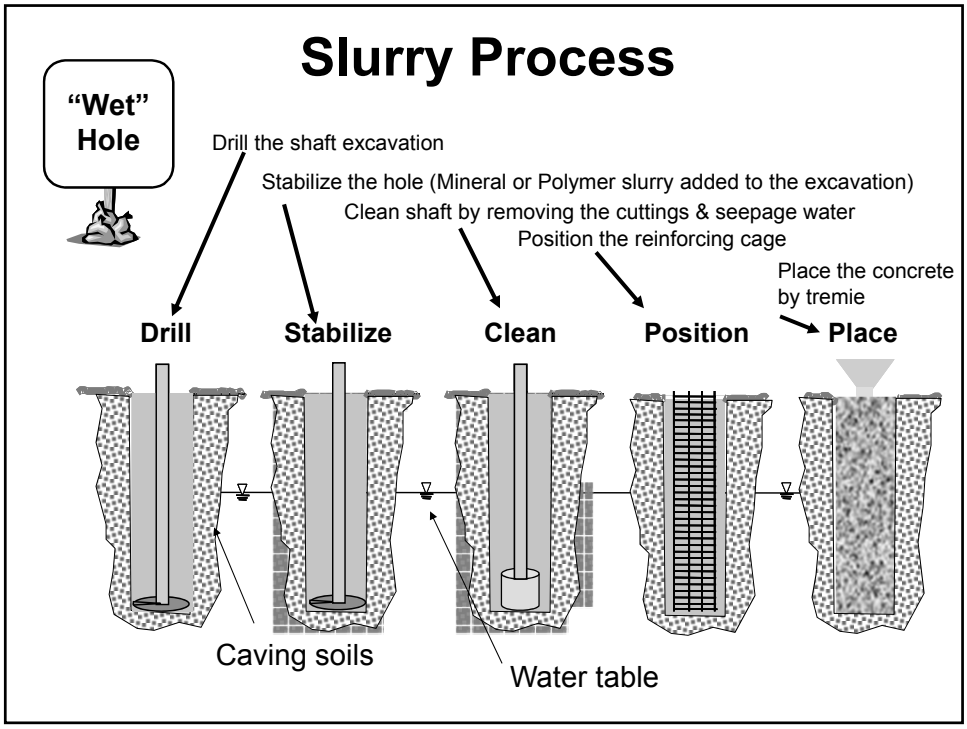
Slurry Process
"Wet" Hole
Drill the shaft excavation
Stabilize the hole (Mineral or Polymer slurry added to the excavation)
Clean shaft by removing the cuttings & seepage water
Position the reinforcing cage
Place the concrete by tremie
Drill
Stabilize
Clean
Position
Place
Caving soils
Water table

Slurry Sampling
Sampler

Slurry Testing

Control tests are used to Maintain Proper Slurry Condition.

- Density: Mud Balance Test; Measures slurry density (weight).
- Viscosity: Marsh Funnel Test; Measures flow rate and consistency.
- pH: For determining the acidity and alkalinity content of the slurry, Scale between 1–14.
- Sand Content Test: Determines slurry sand content, reported in volume percent.

Slurry Testing Equipment

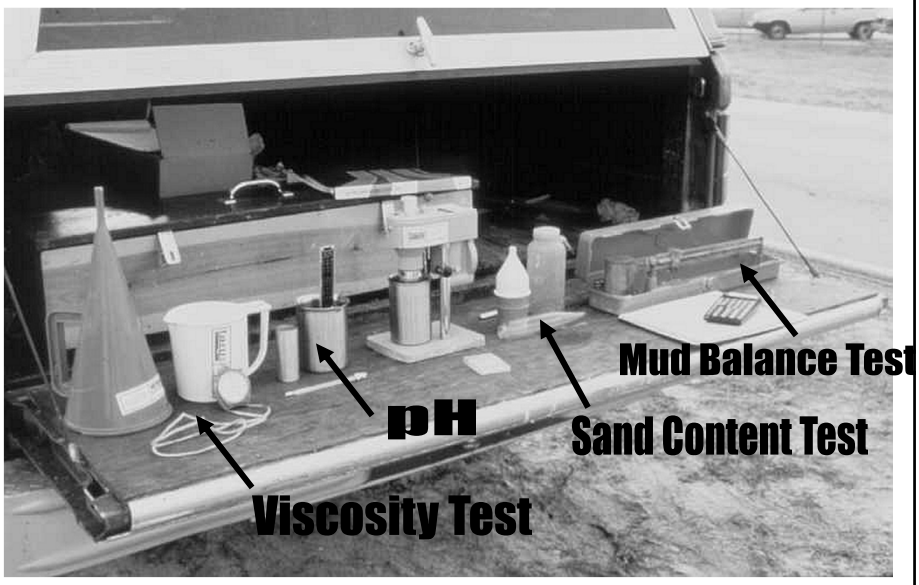

Placing Concrete in “Wet” Holes (Tremie Pipe or Pump Hose)

Placing Concrete

Temporary Casing

Temporary Casing Stabilization

- Used where an Open-Hole **cannot** be maintained.
- Used to seal off caving soils below the water table.
- Used where excessive hole deformation occurs (swelling/expansive soils).
- Used where slurry will not work.

Drilled Shaft Construction Process

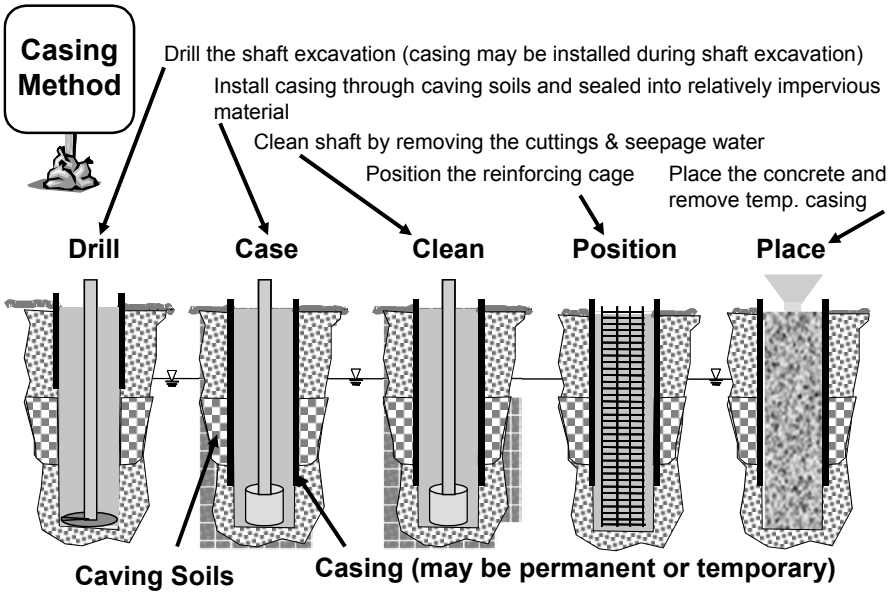

Casing Installation Process (Casing Advancers)

- Hydraulic Oscillators/ Rotators Drive and Extract Casing
- Fitted with Special Quick Coupling Joints

Casing Removal

Permanent Casing

Plan & Elevation

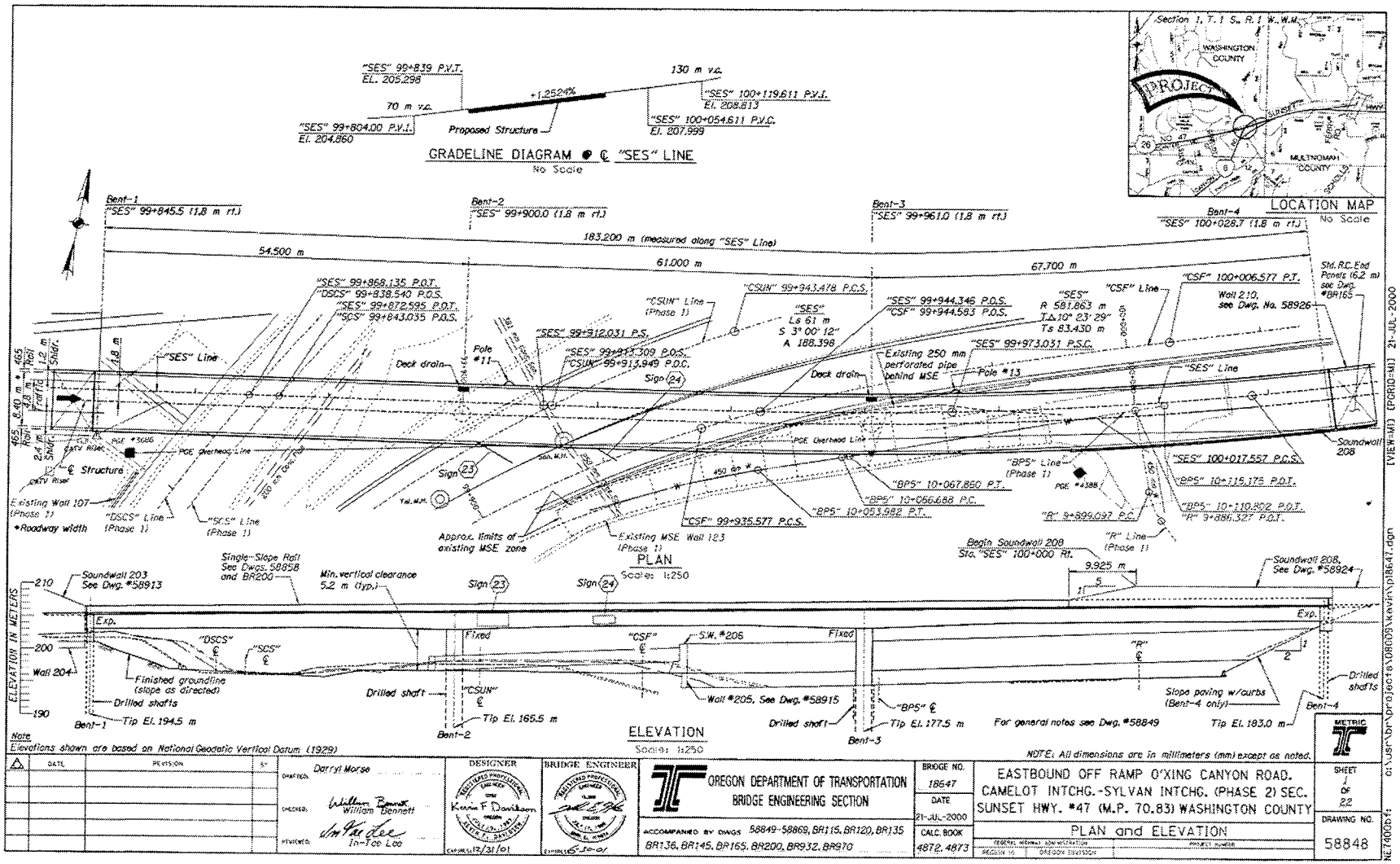

Foundation Data Sheet

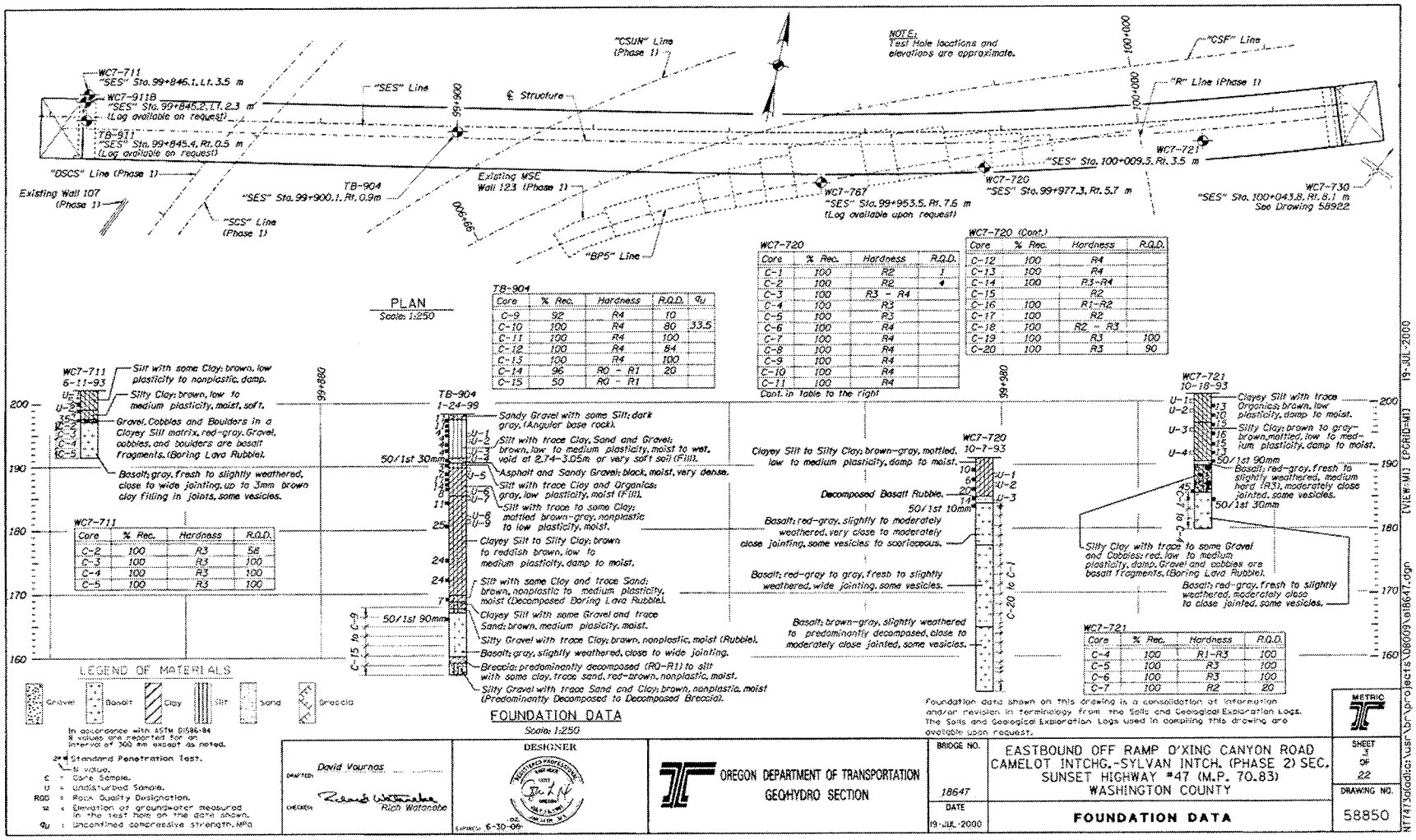

General Notes

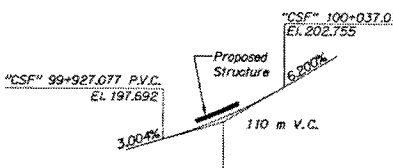

GRADELINE DIAGRAM @ ℄ "CSF" LINE

No Scale

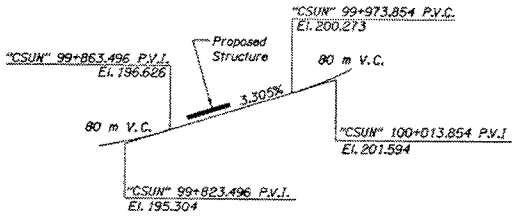

GRADELINE DIAGRAM @ ℄ "CSUN" LINE

No Scale

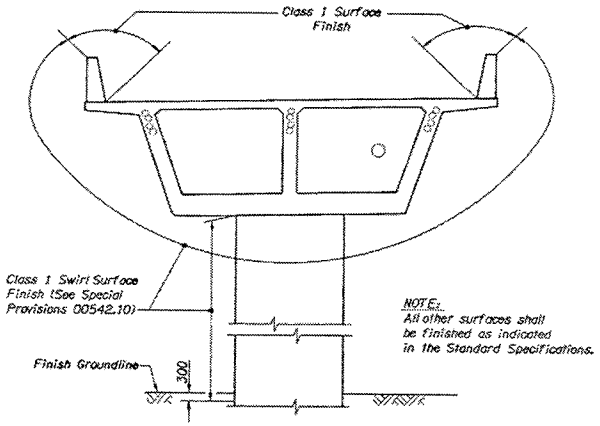

CONCRETE FINISH DETAIL

No Scale

General Notes:

Provide all materials and perform all work according to the 1996 Standard Specifications for Highway Construction of the Oregon Department of Transportation and the 1998 Supplemental Standard Specifications of the Oregon Department of Transportation.

Bridge is designed for MS22.5 loading with an allowance of 1.2 kN/m2 for future wearing surface.

Concrete members (except prestressed members) are designed by Load Factor Design Method.

Seismic design is by multi-mode analysis in accordance with the AASHTO Division 1-A, Seismic Design, "Standard Specifications Seismic Design of Highway Bridges". The site peak bedrock acceleration coefficient (A) is 0.20g and the assumed site coefficient (S) is 1.2. The Response Modification Factors used are: R= 3 for column moments, R= 0.8 for abutment connections, and R= 1.0 for other components.

See Special Provisions for falsework support requirements.

Provide spiral column reinforcement according to ASTM Specification A706M, AASHTO Specifications M31M (ASTM A615M) Grade 420, AASHTO M225M (ASTM A496), or AASHTO M32M (ASTM A82).

Provide all other reinforcing steel according to ASTM Specification A706M, or AASHTO M31M (ASTM A615M) Grade 420. Provide Field bent stirrups according to ASTM Specification A706M.

Use the following splice lengths unless shown otherwise:

Bar Size		10	13	16	19	22	25	29	32	36	43	57
Splice Length (mm)	Uncoated	300	325	425	600	825	1075	1350	1700	2100	Not Permitted	
	Epoxy Coated	400	450	600	850	1150	1500	1900	2400	2950	Not Permitted	

Splice reinforcing steel at alternate bars, staggered at least one splice length or as far as possible, unless shown otherwise.

Support the bottom mat reinforcing steel from the forms with precast mortar blocks at 900 mm maximum centers each way. Support the top mat of reinforcing steel from the bottom mat of reinforcing steel with reinforcing bar supports by Dayton Superior Co. (SBU, BBU, or CHCU) or approved equal at 900 mm maximum centers.

Epoxy coat reinforcing steel in the upper portion of the deck and bridge end panels. This includes top longitudinal bars, top transverse bars (including "truss" bars), and all bars extending from the deck or Bridge End Panels into the parapet.

Place bars 50 mm clear of the nearest face of concrete unless shown otherwise. The top bends of stirrups extending from beam stems into the top slab may be shop or field bent.

Do not fabricate reinforcing steel for columns and walls until final shaft tip elevations have been determined in the field.

Provide Class 35 - 19.0 concrete in post-tensioned box girder superstructure and as shown on detail plans. See Dwg. #58852.

Provide Class 30 - 19.0 concrete in drilled shafts and columns.

Provide Class 30 - 37.5 or 19.0 concrete in reinforced concrete end panels.

Provide Class 25 - 37.5 or 19.0 concrete for all other places.

Provide prestressing steel according to detail plans.

NOTE: All dimensions are in millimeters (mm) except as noted.

METRIC

△	DATE	REVISION	BY

DRAWN: Darryl Morse
CHECKED: William Bennet
REVIEWED: In-Tae Lee

DESIGNER
REGISTERED PROFESSIONAL ENGINEER
Kevin F. Davidson
OREGON
EXPIRES: 12/31/01

OREGON DEPARTMENT OF TRANSPORTATION
BRIDGE ENGINEERING SECTION

BRIDGE NO. 18647
DATE 21-JUL-2000
CALC. BOOK 4872, 4873

EASTBOUND OFF-RAMP

GENERAL NOTES AND GRADELINE DIAGRAMS

SHEET 2 OF 22
DRAWING NO. 58849

NE 7400BF: c:\usr\br\projects\08009\kevin\pb647.dgn (VIEW-C2) (PCRID=C2) 21-JUL-2000

Foundation Plan

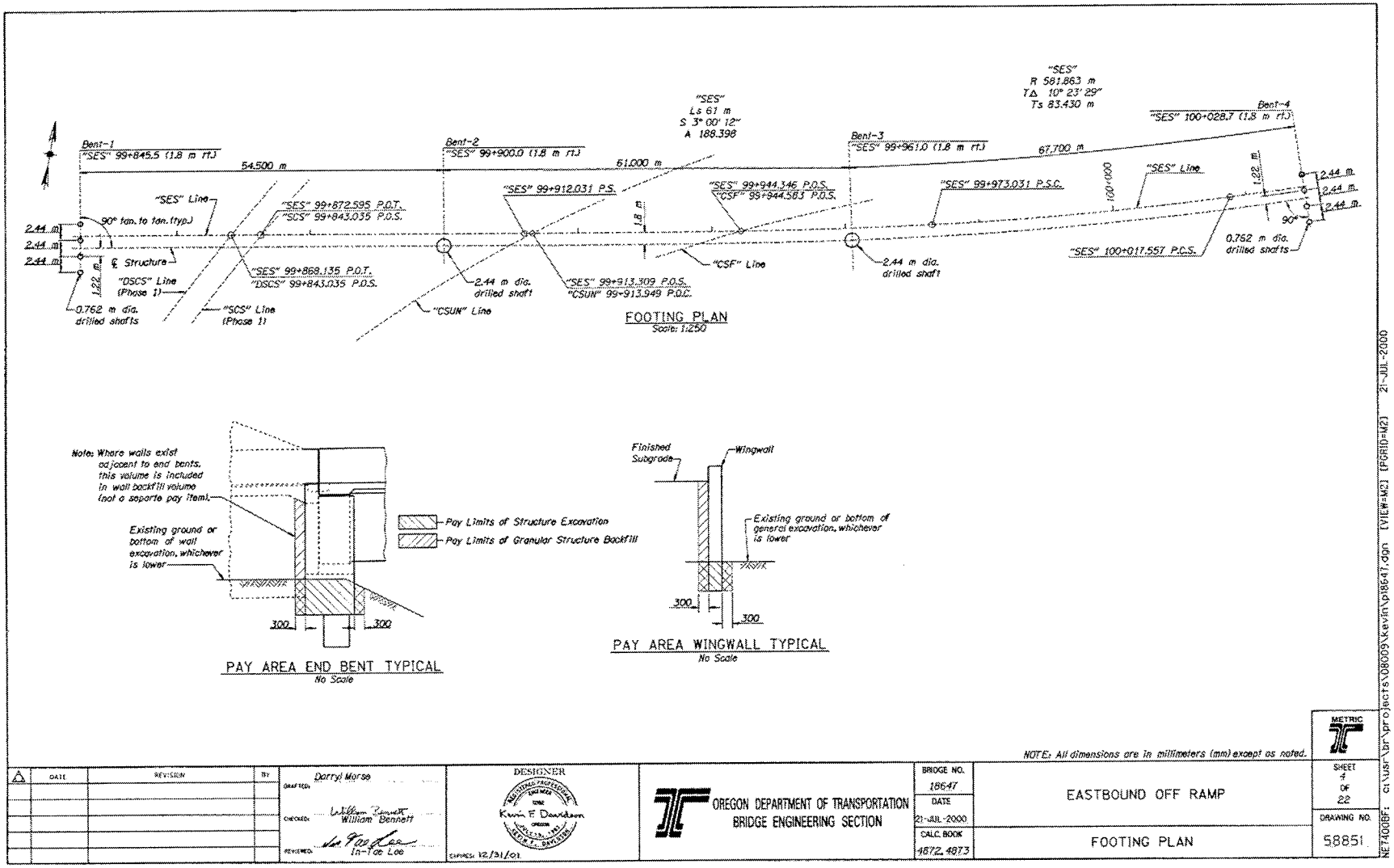

Bent Details

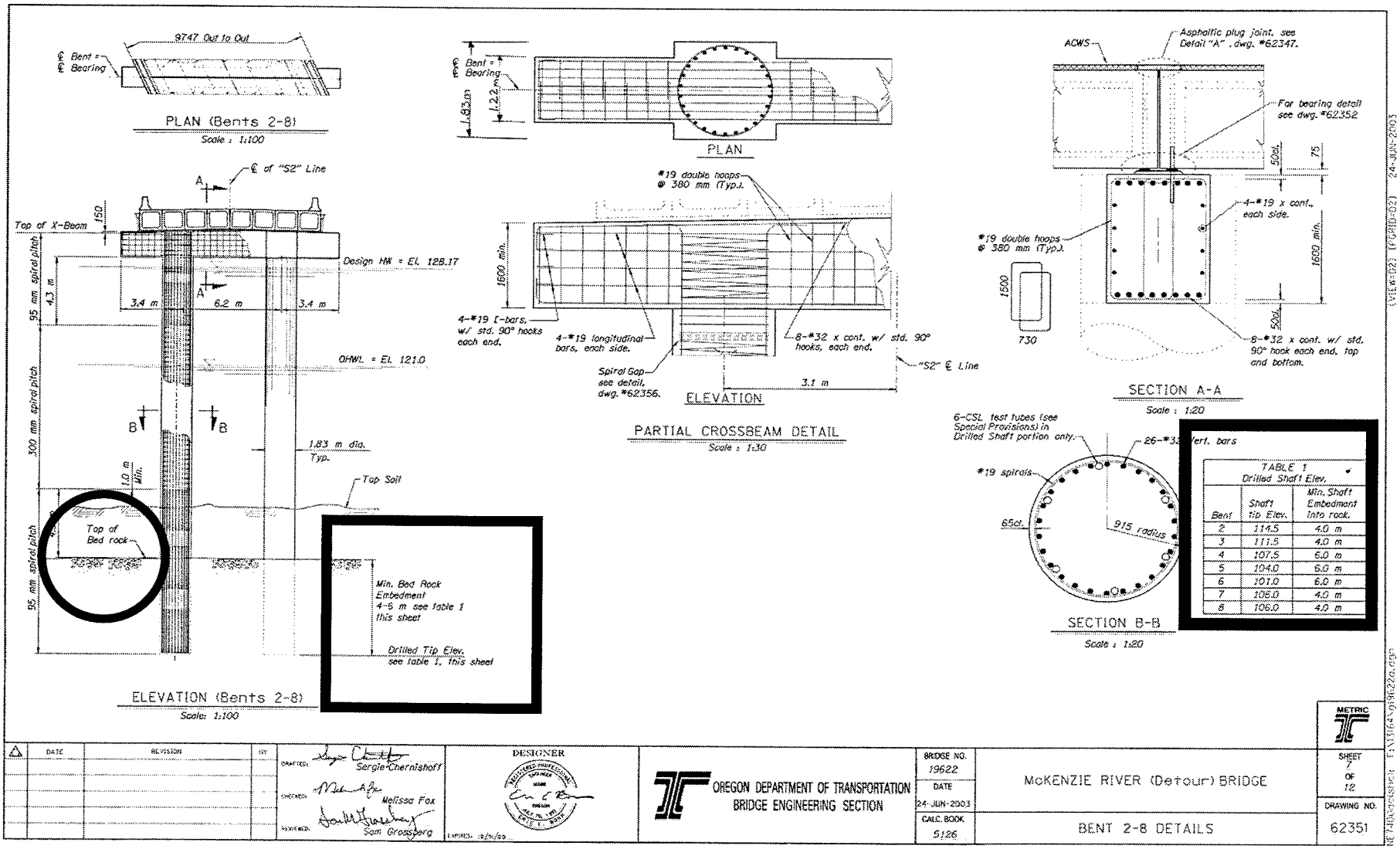

Bent Details

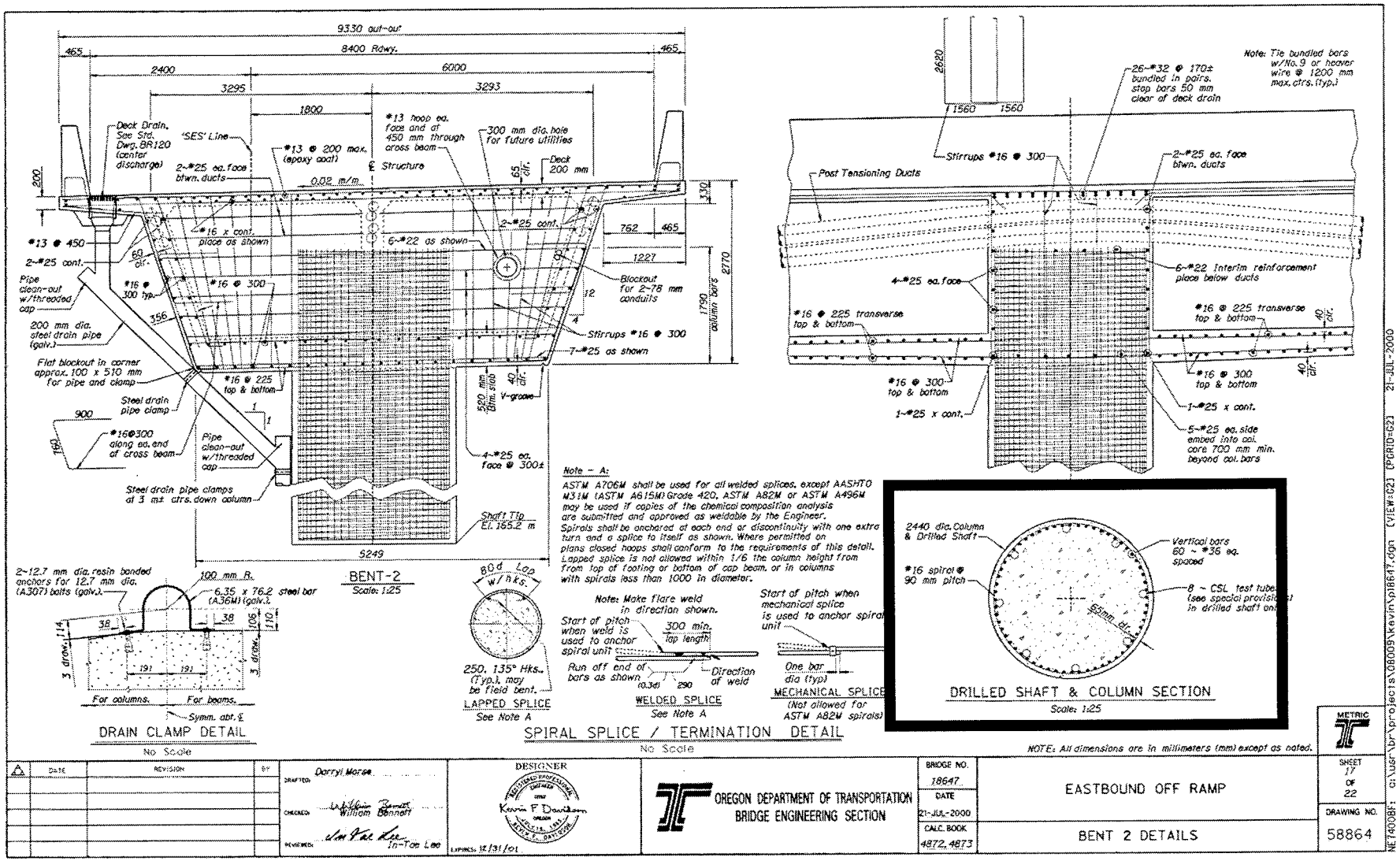

Oregon Department of Transportation

Print Form

Drilled Shaft Inspector's Checklist

The following is a general checklist to follow when constructing a drilled shaft. The answer to each of these questions should be "Yes" or "NA" unless plans, specifications or specific approval has been given otherwise. Any answer of "No" should be explained in the Notes/Comments.
CONSULT WITH PROJECT MANAGER FOR YOUR SPECIFIC PROJECT RESPONSIBILITIES.

Pre-Construction

☐ Yes ☐ No ☐ NA 1. Has the Contractor submitted a Drilled Shaft Installation Plan (00512.40)?

☐ Yes ☐ No ☐ NA 2. Has the Drilled Shaft Installation Plan been approved?

☐ Yes ☐ No ☐ NA 3. Does the Contractor have an approved concrete mix design (00512.12)?

☐ Yes ☐ No ☐ NA 4. Has the Contractor run the required Trial Mix and slump loss tests for their concrete mix design (00512.12)?

☐ Yes ☐ No ☐ NA 5. If concreting is estimated to take over two hours, has the Contractor performed a satisfactory slump loss test for the extended time period in accordance with Section 00512.12, Concrete Mix Design?

☐ Yes ☐ No ☐ NA 6. If the Contractor proposed a polymer or blended mineral-polymer, do you have a copy of the quality control plan for the slurry (00512.43(f)) and the name and phone number of the slurry manufacturer's representative who will be providing technical assistance?

☐ Yes ☐ No ☐ NA 7. Have you reviewed the Foundation Data Sheet and boring logs and understand the subsurface conditions?

☐ Yes ☐ No ☐ NA 8. Has the Contractor addressed the Protection of Existing Structures?

☐ Yes ☐ No ☐ NA 9. Does the Contractor have all the equipment and tools shown in the Drilled Shaft Installation Plan (Section 00512.40)?

☐ Yes ☐ No ☐ NA 10. If casing is to be used, is it the right size and material in accordance with the plans and Section 00512.13?

☐ Yes ☐ No ☐ NA 11. If the Contractor plans to use a manufactured slurry, do they have the proper equipment to mix it?

☐ Yes ☐ No ☐ NA 12. Is a desander required?

☐ Yes ☐ No ☐ NA 13. If a desander is required, does the Contractor have it on site and operational?

☐ Yes ☐ No ☐ NA 14. Does the Contractor's tremie meet the requirements of Section 00512.47(a), Concrete Placement?

☐ Yes ☐ No ☐ NA 15. Do you have all the required drilled shaft forms that need to be filled out during shaft construction?

Shaft Excavation & Cleaning

☐ Yes ☐ No ☐ NA 16. Is the shaft being constructed in the correct location and within tolerance (00512.42, Construction Tolelances)?

☐ Yes ☐ No ☐ NA 17. Does the Contractor have a benchmark so the shaft can be constructed and inspected to the proper elevations?

☐ Yes ☐ No ☐ NA 18. If the Contractor is using slurry, can they perform tests and report results in accordance with 00512.43(g), Drilling Slurry Inspection and Testing?

☐ Yes ☐ No ☐ NA 19. Is the slurry level being properly maintained in accordance with 00512.43(f), Drilling Slurry Installation?

☐ Yes ☐ No ☐ NA 20. Are the proper number of types of tests being performed on the slurry in accordance with 00512.43(g)?

☐ Yes ☐ No ☐ NA 21. Are all excavated materials (spoils) property contained and disposed of (00512.43(a))?

☐ Yes ☐ No ☐ NA 22. If temporary casing is being used, does it meet the requirements of Section 00512.43(c), Casing Removal?

☐ Yes ☐ No ☐ NA 23. Is the shaft within allowable vertical alignment tollerances (Section 00512.42, Construction Tolerances)?

☐ Yes ☐ No ☐ NA 24. Is the shaft of proper depth?

☐ Yes ☐ No ☐ NA 25. Does the shaft bottom meet the clean-out requirements of Section 00512.43(h), Clean-out?

☐ Yes ☐ No ☐ NA 26. Have the Drilled Shaft Excavation forms been completed?

Reinforcing Cage

☐ Yes ☐ No ☐ NA 27. Is the rebar the correct sizes and configured in accordance with the project plans?

☐ Yes ☐ No ☐ NA 28. Is the rebar properly tied in accordance with Section 00530.41(b), Ties and Supports?

☐ Yes ☐ No ☐ NA 29. Are the proper number of CSL tubes furnished and installed according to the plans?

☐ Yes ☐ No ☐ NA 30. Does the Contractor have the proper spacers for the steel cage in accordance with 00512.45(d), Concrete Cover?

☐ Yes ☐ No ☐ NA 31. Does the Contractor have the proper amount of spacers for the steel cage in accordance with the approved Drilled Shaft Installation Plan?

Reinforcing Steel Cage Construction and Placement

☐ Yes ☐ No ☐ NA 32. If the steel cage was spliced, was it done in accordance with the details shown on the contract plans?

☐ Yes ☐ No ☐ NA 33. Is the steel cage secured from settling and from floating? (During concrete placement steel cages sometimes rise with the placement of concrete.) (00512.45(a) & 00512.47(e), Reinforcing Steel and Casing Removal)

☐ Yes ☐ No ☐ NA 34. Is the top of the steel reinforcement at the proper elevation (00512.45)?

Concreting Operations

☐ Yes ☐ No ☐ NA 35. Prior to concrete placement, has the slurry (both manufactured and natural) been tested in accordance with Section 00512.43(g), Drilling Slurry Inspection and Testing?

☐ Yes ☐ No ☐ NA 36. If required, was the casting removed in accordance with 00512.47(e), Casing Removal?

☐ Yes ☐ No ☐ NA 37. Was the discharge end of the tremie maintained in the concrete mass with proper concrete head above it at all times (00512.47(c), Concrete Placement)?

☐ Yes ☐ No ☐ NA 38. Did concrete placement occur within the specified time limit (00512.47(a), Concrete Placement)?

☐ Yes ☐ No ☐ NA 39. Have the Concrete Placement and Volume forms been completed?

☐ Yes ☐ No ☐ NA 40. When placing concrete, did the Contractor overflow the shaft until good concrete flowed out of the top of the excavation (00512.47(a), Concrete Placement)?

☐ Yes ☐ No ☐ NA 41. Were concrete acceptance tests performed as required?

Post Installation

☐ Yes ☐ No ☐ NA 42. Is all casing removed to the proper elevation in accordance with 00512.47(e), Casing Removal?

☐ Yes ☐ No ☐ NA 43. Has all Crosshole Sonic Log Testing been completed in accordance with the Specifications (Section 00512.48, Crosshole Sonic Log Testing)?

☐ Yes ☐ No ☐ NA 44. Is the shaft within the applicable construction tolerances (00512.42, Construction Tolerances)?

☐ Yes ☐ No ☐ NA 45. Has the Contractor completed the Drilled Shaft Inspection Report (Section 00152.40(c))?

☐ Yes ☐ No ☐ NA 46. Have you documented the pay items (Section 00512.90)?

NOTES / COMMENTS

SAMPLE INSPECTOR'S "TOOLS" CHECKLIST

Approved Job Information

- ☐ Project Plans & Specifications w/ Revisions
- ☐ Special Provisions & Technical Special Provisions
- ☐ Drilled Shaft Installation Plan

References

- ☐ Standard Specifications
- ☐ Drilled Shaft Inspector's Manual (Local Department)
- ☐ Drilled Shaft Inspector's Qualification Course Manual (NHI #132070)

Testing Equipment

- ☐ Sampler
- ☐ Sand Content Testing Equipment
- ☐ Mud Density Test Equipment
- ☐ Viscosity Test Equipment

Blank Forms

- ☐ Drilled Shaft Soil/Rock Excavation Log
- ☐ Drilled Shaft Rock Core Log
- ☐ Drilled Shaft Inspection Log
- ☐ Concrete Placement Log
- ☐ Concrete Volume Form
- ☐ Drilled Shaft Log
- ☐ Drilled Shaft Construction & Pay Summary

Daily Essentials

- ☐ Hard Hat
- ☐ Boots
- ☐ Ear & Eye Protection
- ☐ Pen / Pencil (with spare)
- ☐ 12' Tape (Preferably 25')
- ☐ 150' Tape
- ☐ Builders Square
- ☐ Life Jacket or reflective jacket
- ☐ Watch
- ☐ Calculator
- ☐ Camera
- ☐ Scale
- ☐ Level
- ☐ Weighted Tape (100')
- ☐ Plumb bob

Construction Documents

Inspector's Responsibilities on a Drilled Shaft Project

CONTRACTOR SET UP

Responsible to:
- Check Drilled Shaft Installation Plan
- Check Contractor Equip.
- Check hole location
- Check template
- Check setup for plumbness, etc.

SHAFT EXCAVATION

Responsible to:
- Describe Soils & Rock
- Prepare Soil & Rock Excavation Logs
- Verify Shaft Depth
- Perform Shaft Inspection
- Prepare Shaft Inspection Log
- Verify hole cleanliness
- Document casing use, type, length

PLACING STEEL

Responsible to:
- Verify proper steel size, length, etc.
- Verify proper ties
- Verify proper spacers and intervals
- Verify Instrumentation protection

CONCRETING OPERATION

Responsible to:
- Verify hole cleanliness
- Monitor concrete volumes
- Prepare Concrete Placement Log
- Check Const. Tolerances

POST INSTALLATION

Responsible to:
- Verify pay quantities
- Verify integrity testing
- Complete required forms
- Verify Load Tests

Inspection Forms

- Drilled Shaft Soil/Rock Excavation Log
- Drilled Shaft Inspection Report
- Concrete Placement Log
- Concrete Volumes Form

Contractor & Equipment Arrive On-site

Inspector Responsibilities:

- Checking Contractor Equip. vs. Drilled Shaft Installation Plan.
- Checking for Protection of Existing Structures.
- Checking Concrete and Slurry Data.

Protection of Existing Structures

Typically:

- As shown in the plans, or
- Within a distance (D) of 10 Shaft Diameters or
- The estimated depth of excavation, whichever is greater.

Distance from Shaft to be monitored (D)

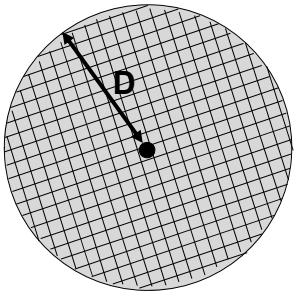

D = 10 Shaft diameters

Inspection

Shaft Excavation, Cleaning & Inspection

Verify Drilled Shaft:

- Location
- Alignment
- Tolerances
- Diameter
- Depth

Shaft Excavation, Cleaning & Inspection – Cont'd

- Prepare Soil & Rock Excavation Logs
- Monitor Slurry Testing
- Document casing usage; Type, Length, etc.
- Perform Shaft Inspection and Verify Cleanliness

DRILLED SHAFT INSPECTION REPORT

BRIDGE NAME				PROJECT:			CONTRACT NO.:
BRIDGE NO.	BENT	STATION	SHAFT NO.	SHAFT DIAMETER	INSPECTED BY	CERTIFICATION NO.	DATE
DRILLED SHAFT CONTRACTOR				PRIME CONTRACTOR			

Time Excavation Started: _____ STOPPED _____

Date/Time Bottom Inspected: _____

Date Concreting Started: _____ STOPPED _____

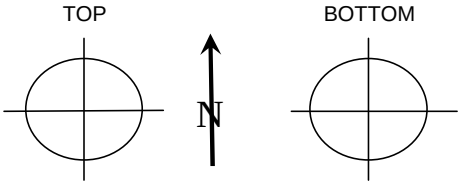

Mark Deviation from Plan

As-built location within tolerances? _____

	Plan Measurements	"As-Built" Measurements
Top Elevation	_____	_____
Bottom Elevation	_____	_____
Shaft Diameter	_____	_____
Rock Socket Diameter (if appl.)	_____	_____
Shaft Length*	_____	_____

*Was longer shaft approved for payment? ☐ Yes ☐ No

Concrete Volume (cy) _____ _____

Concrete Mix Design _____ _____

Concrete Placement Method ☐ Tremie ☐ Free Fall

Concrete Slump @ time or pour _____

Water Inflow Rate _____ gal/min (est.)

Bottom of Shaft Cleanliness Meets Specification? ☐ Yes ☐ No

Proper reinforcement and CSL tubes installed: _____

Description of bottom of shaft: _____

COMMENTS (Obstructions Encountered, etc.):

CSL Test Performed: ☐ Yes ☐ No

CSL Test Results Approved: ☐ Yes ☐ No* *If not approved, describe results and resolution

Shaft Approved by:

INSPECTOR SIGNATURE DATE

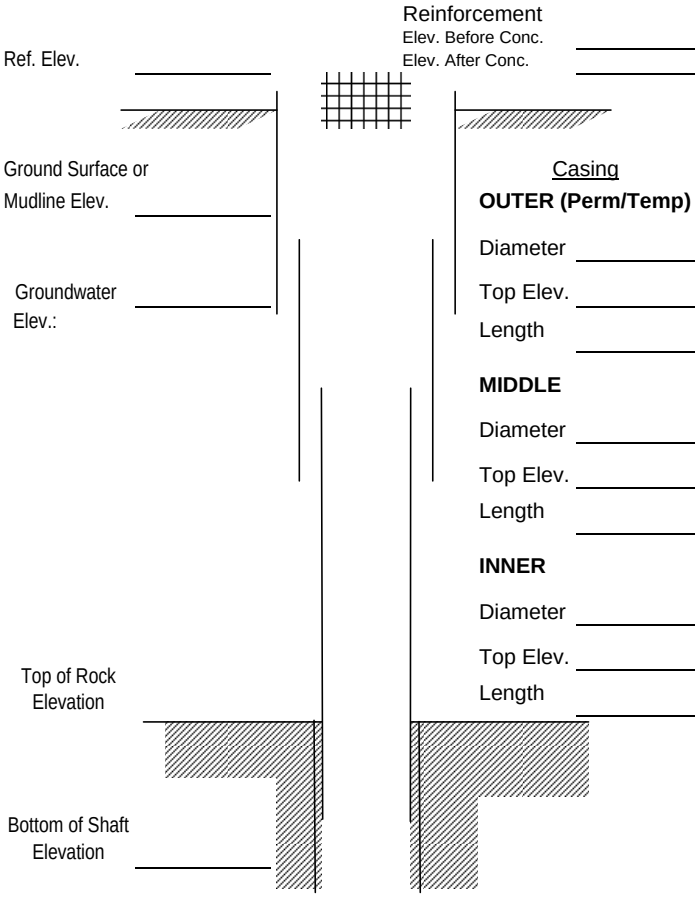

Note: Forward completed reports to ODOT Bridge Section.

http://www.oregon.gov/ODOT/HWY/CONSTRUCTION/HwyConstForms1.shtml

734-2598 (8-2009)

Is the shaft being constructed within the correct location and tolerance (Section 00512.42)?

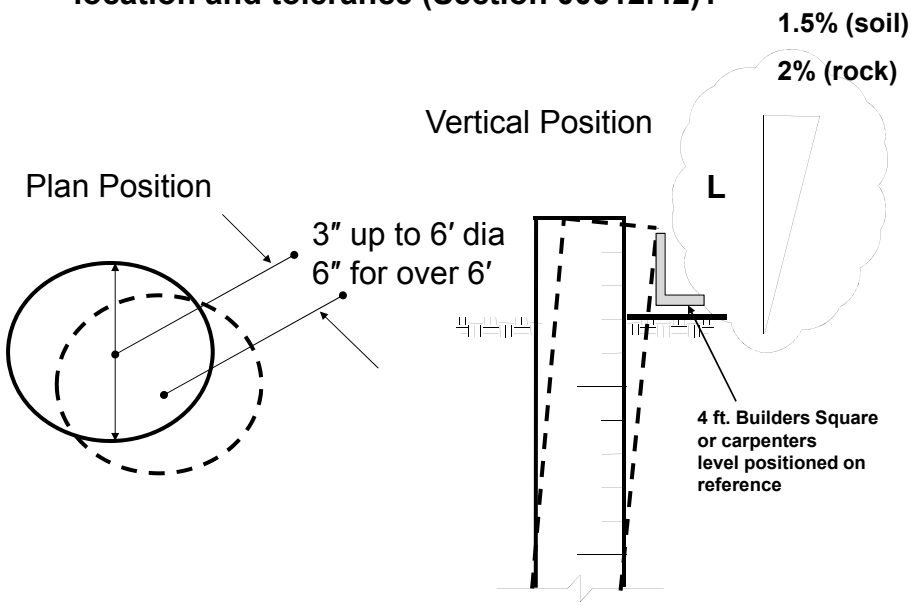

To Check for Vertical Alignment

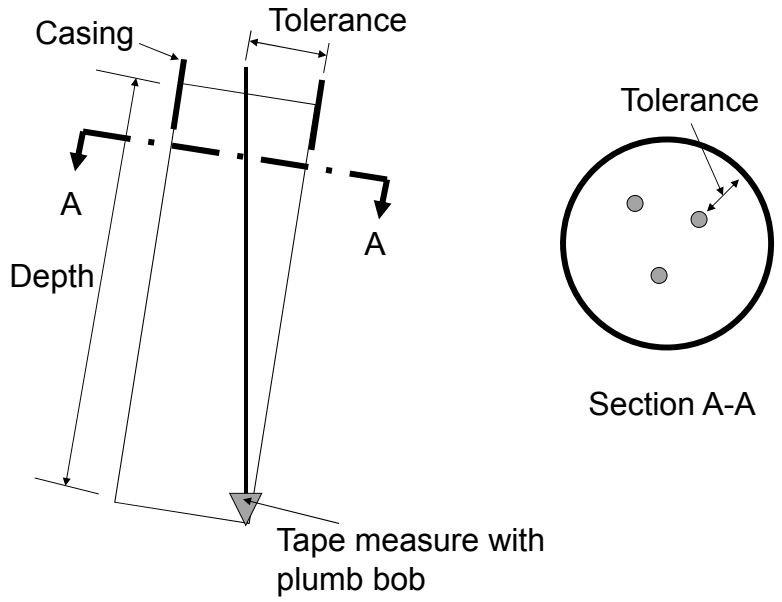

DRILLED SHAFT EXCAVATION LOG

PROJECT		BRIDGE NO.	CONTRACT NO	
BENT	STATION	SHAFT NO.	SHAFT DIAMETER	
DRILLED SHAFT CONTRACTOR		INSPECTED BY	CERTIFICATION NO.	DATE

DATE/TIME EXCAVATED		TYPE OF CONSTRUCTION
START	FINISH:	☐ DRY ☐ WET

ELEVATIONS

Reference Elev. _____
Grd. Surface Elev. _____
Water Table Elev. _____
Top Shaft Elev. _____
Msd Top Rock Elev. _____
Msd Avg. Shaft Bot Elev. _____

DIMENSIONS

Soil Auger Dia. _____
Soil Shaft Length _____
Rock Auger Dia. _____
Rock Socket Length _____
Construc. Shaft Length _____

DRILLING SLURRY

Slurry Type & Manufacturer : _____

Slurry Meets Specifications? **Y** **N**

CLEANOUT METHOD

Bucket _____ Airlift _____ Pump _____
Other: _____

BOTTOM INSPECTION

Visual _____ Tape/Probe _____
Record 5 depths to the bottom of finished shaft:

1 _____ 3 _____
4 _____
2 _____ 5 _____

Ave. Shaft Bottom Elev.: _____
Meet Cleanout Specification? **Y** **N**
Meet Alignment Specifications? **Y** **N**

CASING INFORMATION (if applicable)

Casing (Temp / Perm)	Casing (Temp / Perm)	Casing (Temp / Perm)
Type _____	Type _____	Type _____
OD (in.) _____	OD (in.) _____	OD (in.) _____
Thickness _____	Thickness _____	Thickness _____
Top Elev. _____	Top Elev. _____	Top Elev. _____
Length: _____	Length: _____	Length: _____

Record and describe all materials encountered during drilled shaft excavation, water table information, depths of seepage and seepage rates, obstructions encountered, equipment used and equip. breakdowns (use additional sheets if necessary).

DEPTH	ELEVATION	START	FINISH	SOIL OR ROCK MATERIAL DESCRIPTION AND NOTES	LOG

INSPECTOR SIGNATURE _____ DATE _____

NOTES: _____

Shaft Depth & Cleanout Requirement

- Depth typically determined and verified by lowering a Weighted Tape down to the bottom of the shaft after cleaning.
- Depth typically measured and recorded to the nearest 0.1 or 0.01 of a foot.
- Improved cleanout can be achieved with Air Lifts and Submersible Pumps vs. Cleanout Buckets.

Checking Shaft Bottom & Cleanliness

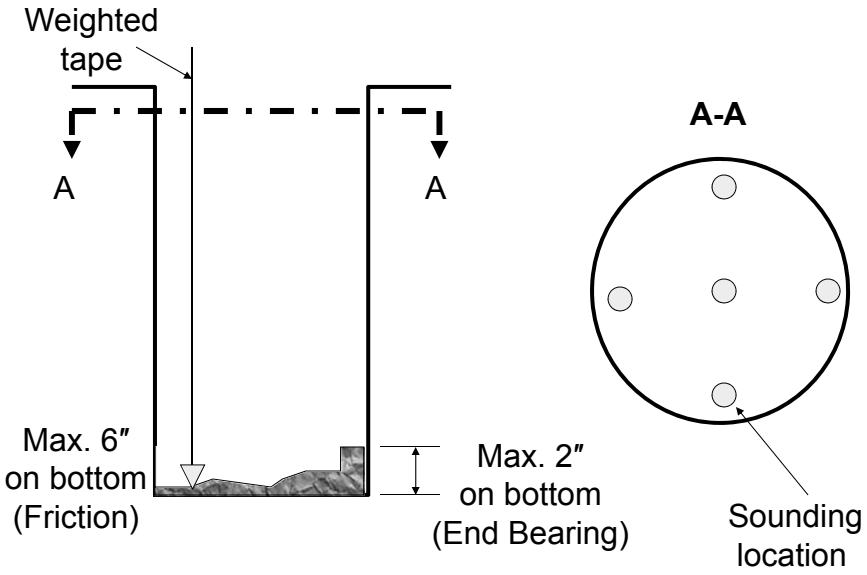

Reinforcing Cage

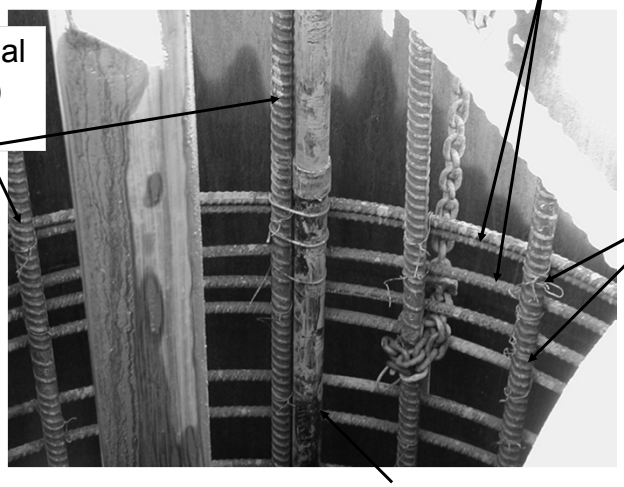

Is the rebar properly tied in accordance with Section 00530.41, Placing and Fastening?

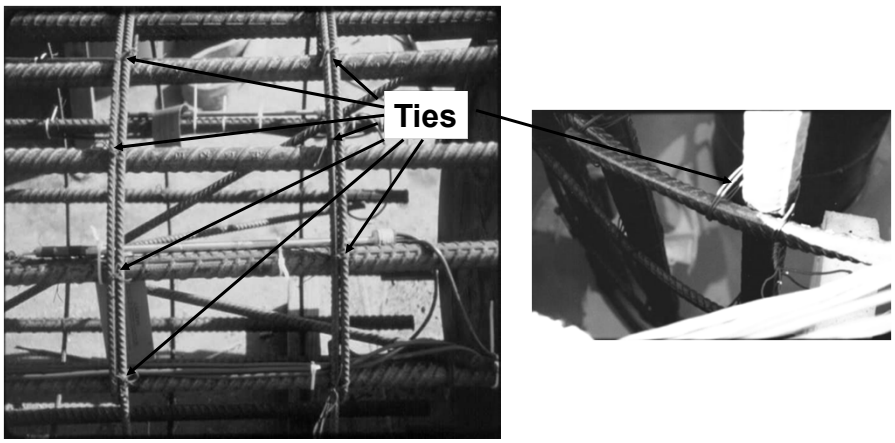

Does the contractor have the proper spacers for the steel cage? 00512.45 (d)

- Minimum 3″ annular space (Cover) between outside of cage and shaft walls (6″ recommended).
- Start spacers near the bottom of cage with vertical spacing intervals not exceeding 10 ft.
- Use a minimum of 1 spacer per 30 inches of rebar cage circumference with a minimum of 3 spacers at each interval.
- Standoffs are usually allowed to support the bottom of the cage.

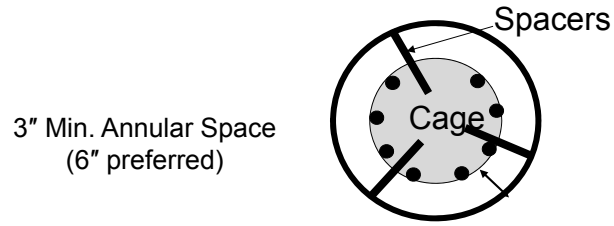

Plastic Roller Spacer

Epoxy Coated Rebar Spacer

Spacer Example

4 ft Drilled Shaft

6″ clearance

How many spacers are required on each level?

$C = \pi \times D$

$C = 3.14 \times 3' = 9.42'$

# of Spacers = 9.42 ′ / 2.5 ′ /Spacer = 3.8

# of Spacers = 4

Spacer Exercise

8 ft Drilled Shaft

6″ clearance

How many spacers are required on each level?

Reinforcing Cage Construction

- Shall be completely assembled prior to placement.
- Placed immediately after inspection and acceptance of shaft.
- Internal stiffeners removed as cage is placed in the borehole.

Reinforcing Cage Storage & Handling

- Do not store in contact with soil.
- Keep away from oil or other deleterious materials.
- Provide adequate supports during lifting.

Crosshole Sonic Logging (CSL) Access Tubes

Section 00512.15 - Crosshole Sonic Logging (CSL) Test Access Tubes:

- Placed per plan.
- Acoustic logging tubes to be Schedule 40 steel pipe with minimum I.D. of 1.5 inches.
- Tied securely to the reinforcement cage.
- Water-tight Joints.

Crosshole Sonic Logging (CSL) Access Tubes

Section 00512.15 - Crosshole Sonic Logging (CSL) Test Access Tubes:

- No damaged or bent pipe allowed.
- Check inside pipe for defects or obstructions.
- Filled with water before <u>or</u> immediately after concrete placement and capped top and bottom.

Crosshole Sonic Logging (CSL) Access Tubes

Splicing of Cage

Occasionally, due to a variety of things, the shaft will be deeper than the rebar cage length & splicing will be required.

Any splicing of the reinforcement cage requires the approval of the Structural Design Engineer.

Placement of Reinforcement Cage

Is the steel cage secured from settling and floating during concrete placement?

- Contractor methods for maintaining cage position during construction must be described in the Drilled Shaft Installation Plan.
- Check top of cage elevation before and after concrete placement.
- After concrete placement the top of reinforcement cage should not exceed:

  6″ above plan elevation
  6″ below plan elevation

  00512.42

Concreting Operations

- Verify hole cleanliness
- Test concrete
- Monitor concrete volumes
- Prepare Concrete Placement Log
- Check Construction Tolerances

Prior to concrete placement, has the slurry been tested in accordance with Section 00512.43(f)?

Additional Recommended Requirements:

- Must sample and test slurry prior to placing concrete.
- Need 2 consecutive tests producing acceptable results.
- Concrete cannot be placed until passing test results achieved.

Typical Concrete Sampling and Testing to be Performed:

- Slump
- Air Content
- Temperature

} Check Construction Inspection Manual

- Strength Test Specimens } Typically at least one set per shaft and per specified quantity.

Drilled Shaft Concrete

Typical Slump Range
2001.20(c)

All conditions

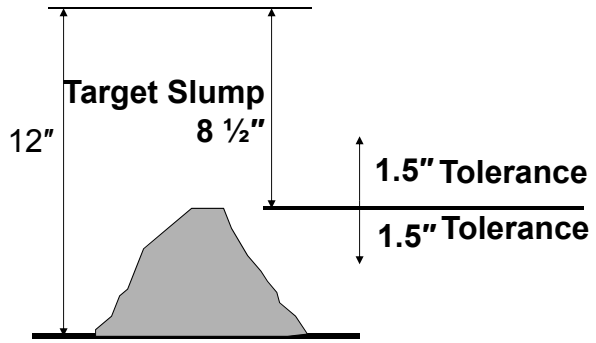

Slump OK for drilled shafts

Slump too low for drilled shafts

Concrete Placement

00512.49 Scheduling and Restrictions

- Do not proceed with additional shafts until the first drilled shaft has been approved and accepted by The Engineer in writing.
- Approval to proceed with constructing subsequent shafts prior to written acceptance of the first shaft will be based on The Engineer's observations.
- Written notification to proceed or not to proceed will be provided within 24 hours.

Concrete Placement

00512.49 Scheduling and Restrictions – Continued

- Do not proceed with the third drilled shaft until CSL test results have been reviewed and the first shaft approved and accepted by The Engineer in writing.
- After the first drilled shaft on the Project has been accepted, make no significant change in construction methods, equipment or materials used in the construction of subsequent shafts, unless approved by The Engineer.

Concrete Placement

- Place concrete continuously.
- Place concrete without interruption.
- Place concrete from the bottom of the hole to the top.
- Place concrete until fresh concrete is coming out of the top of shaft, free of water, soil debris or other deleterious materials.

Concrete Placement

- No mechanical vibration required.
- Dispose of all displaced water, laitance and waste concrete according to regulations.
- Wet cure the top of shaft for a minimum of seven days. 00512.47(d)

Concrete Placement

Tremie Method

- Begins at the bottom of the hole.
- Place immediately after cleanout.

Gravity Tremie Placement

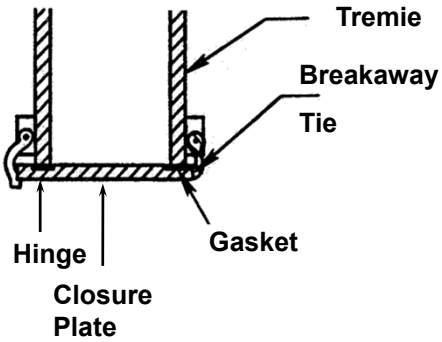

Pump Line Placement

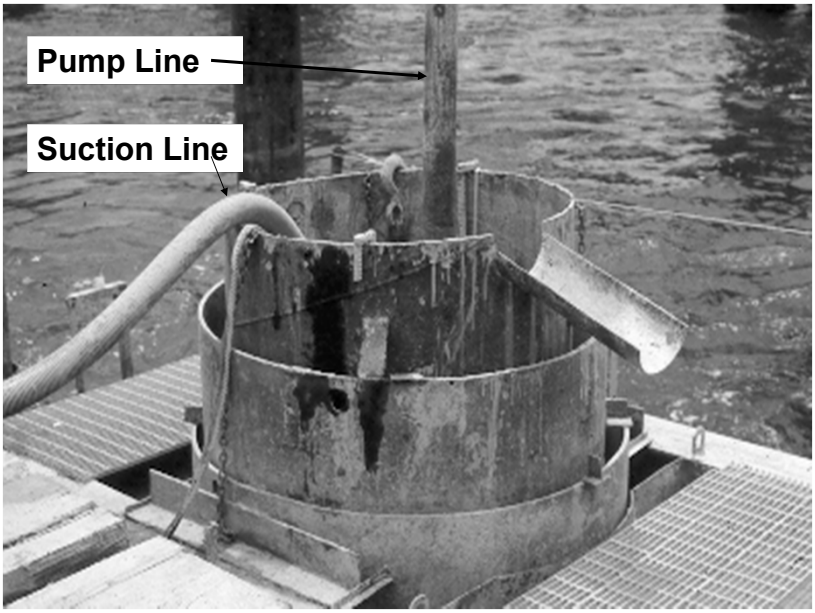

Tremie Concrete Placement

- Discharge end of tremie must be immersed a minimum of 5 ft. in the concrete at all times. 00512.47(c)
- Flow of concrete must be continuous.
- Concrete level in tremie must be above slurry or water level in hole.
- If tremie breaches the shaft is considered defective.

Do Not Breach the Tremie

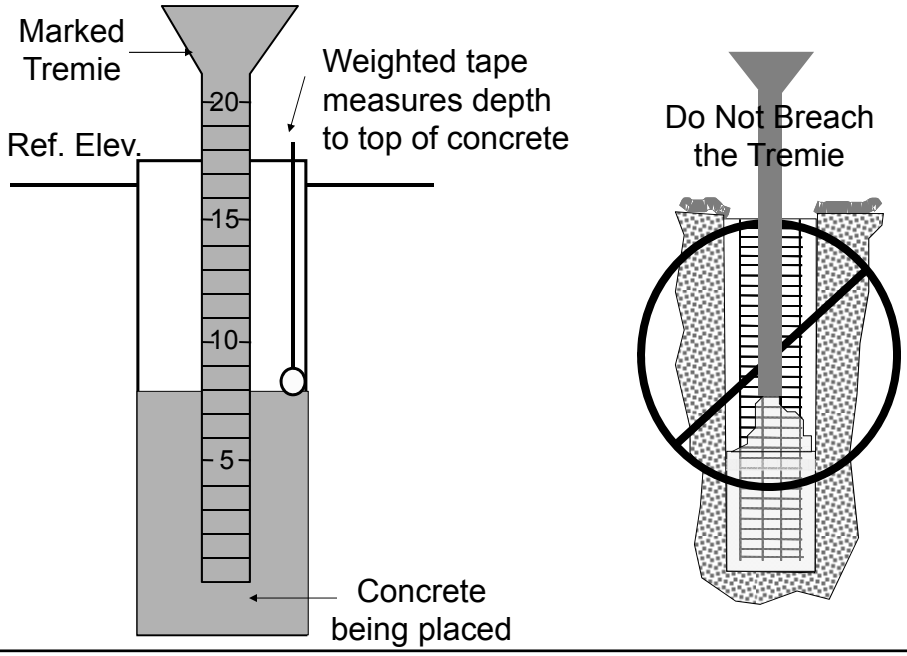

Free Fall Concrete Placement 00512.47(b)

- Free fall placement only permitted in dry holes.
- Must fall to base of shaft without contacting rebar cage or shaft walls.
- Make sure all cage bracing is removed prior to concrete placement .
- Drop chutes may be use.

Free Fall Method

Concrete Placement Time Limits

Should a delay in concrete placement occur:

- Reduce the placement rate to maintain fresh concrete flow in the shaft.
- Allow a maximum of 60 minutes between placements.
- No concrete older than 90 minutes from batch time.
- Ensure that the concrete within the shaft becomes a monolithic, homogeneous unit.

Permanent Casing Removal

Section 00512.47 (e) Casing Removal-

- Remove the tops of permanent casing to the Top of the Drilled Shaft or the Finished Groundline, whichever is lower, unless otherwise shown or directed.
- Remove the tops of permanent casing for shafts constructed in a permanent body of water to the low water elevation, unless otherwise shown or directed.

Temporary Casing Removal

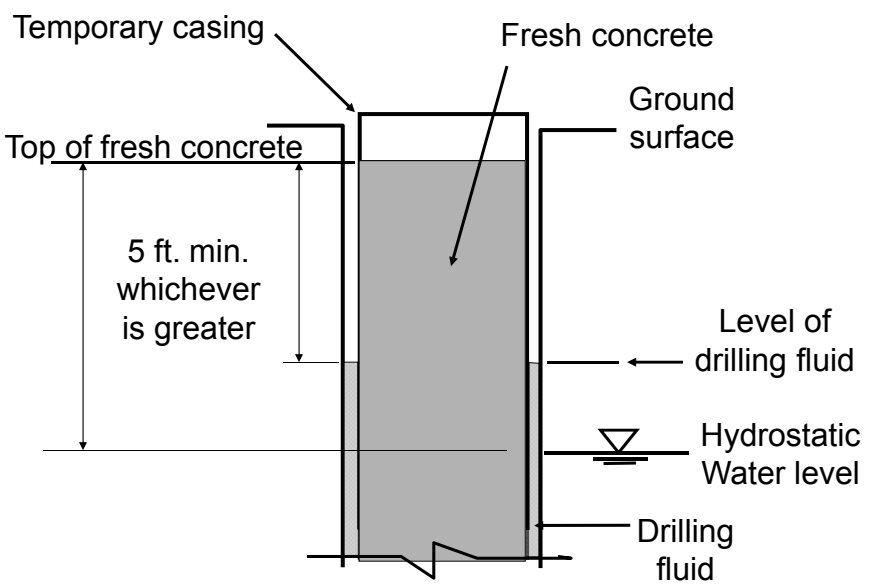

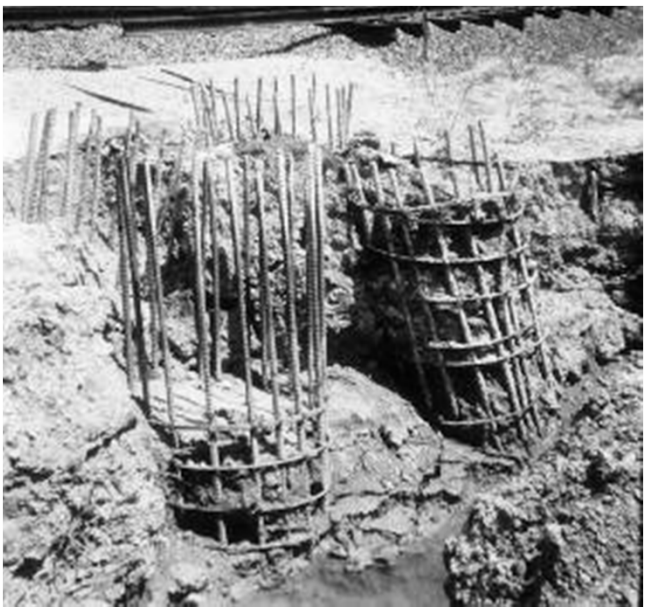

Be alert for rising concrete or cage as casing is being pulled.

Structural defect produced by interruption in concreting.

Typical Inspector Duties During Placement

- Record start and finish times for placement.
- Record concrete quantity per load/truck.
- Measure and record depth/elevation of top of concrete after each load.
- Plot concrete volume curve.
- Verify placement is continuous.
- Monitor for tremie breaching.

Concrete Volumes

Oregon Department of Transportation

DRILLED SHAFT CONCRETE PLACEMENT LOG

PROJECT		BRIDGE NO.	CONTRACT NO	
BENT	STATION	SHAFT NO.	SHAFT DIAMETER	
DRILLED SHAFT CONTRACTOR		INSPECTED BY	CERT. NO.	DATE

REFERENCE ELEVATION	SHAFT TOP ELEVATION	REBAR CAGE TOP ELEVATION:	AT START	AT FINISH
DEPTH TO WATER OR SLURRY	SHAFT BOTTOM ELEVATION	REBAR DESIGN ELEV.	WITHIN SPEC? ☐ YES	☐ NO
TOP OF ROCK ELEVATION	SHAFT LENGTH	REBAR CAGE CENTERED WITHIN SPEC? ☐ YES	☐ NO	

SHAFT CONCRETE INFORMATION

Placement Method

____ Free Fall

____ Tremie

De-Airing Method

____ Tremie Plug

____ Tremie Cap

____ Relief Valve

Volume in Lines

#	ID	Length	Volume
____	____	____	____ cy
____	____	____	____ cy
____	____	____	____ cy

Total Volume in Lines (VL) ____ cy

Estimated Waste Concrete (VW) ____ cy

Begin Pour: Date: _____ Time: _____

End Pour: Date: _____ Time: _____

Shaft Completion Time: _____
(including casing removal)

_____ **Total Concrete Volume Delivered (TVD)**

_____ **Total Concrete Volume In Shaft; cy (=TVD-VL-VW)**

Truck No.	Concrete Volume	Slump	Arrival Time	Start Time	Finish Time	Tremie Depth	Depth To Concrete	NOTES (delays, additives, breaching, casing removal)

_____ **Total Concrete Volume Delivered (TVD)**

_____ INSPECTOR SIGNATURE

_____ DATE

NOTES: _____

CASING REMOVAL

	OD	Top Elev.	Bot. Elev.	Start	Finish
	____	____	____	____	____
	____	____	____	____	____
	____	____	____	____	____
Permanent Casing	____	____	____		

DRILLED SHAFT CONCRETE VOLUMES

PROJECT		BRIDGE NO.	CONTRACT NO	
BENT	STATION	SHAFT NO.	SHAFT DIAMETER	
DRILLED SHAFT CONTRACTOR		INSPECTED BY	CERT. NO.	DATE

CONCRETING CURVE

Prior to pouring concrete, a plot should be made showing the theoretical concrete surface (by depth or elev.) vs. concrete volume placed. During concrete placement the actual concrete surface vs. the actual concrete volume placed is then plotted.

Shaft Top

DEPTH/ELEVATION (Feet

Shaft Bottom

CONCRETE VOLUME PLACED (cubic yards)

VOLUME CALCULATIONS

Volume Delivered	TVD	____ cy	Notes/Comments: _____
Volume in Lines	VL	____ cy	_____
Wastage	VW	____ cy	_____
Volume Placed (= TVD-VL-VW)	VP	____ cy	_____
Theoretical Volume ($\pi(D^2/4)$(Shaft Length,ft)/27)	VT	____ cy	_____
Overpour (VP-VT)	OP	____ cy	_____

Possible Causes of Curve Irregularities

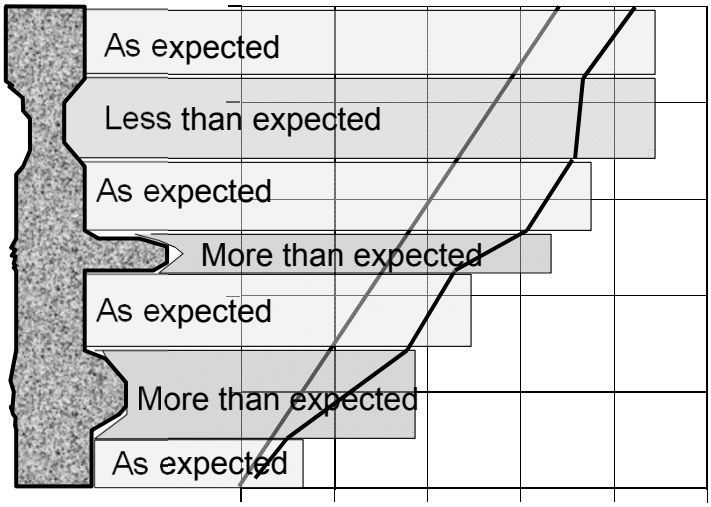

Concrete Volume Curve Example

Calculate Theoretical Volume of Shaft

5′ Dia Drilled Shaft

50′ Long

Volume = $\pi r^2 h$ / 27cf/cy

V = $\pi (2.5')^2 (50')$ / 27cf/cy = 36.4 cy

Theoretical Volume = 36 cy

Convert Field Measurements

6 Truck Loads of 8 cy each:

Tr	CY	Depth Ft	Accum CY	Elev
0	0	50	0	0
1	8	45	__	__
2	8	36	__	__
3	8	27	__	__
4	8	25	__	__
5	8	7	__	__
6	5	0	__	__

Waste = 3 cy

Convert Field Measurements

6 Truck Loads of 8 cy each:

Tr	CY	Depth Ft	Accum CY	Elev
0	0	50	0	0
1	8	45	8	5
2	8	36	16	14
3	8	27	24	23
4	8	25	32	25
5	8	7	40	43
6	5	0	45	50

Waste = 3 cy

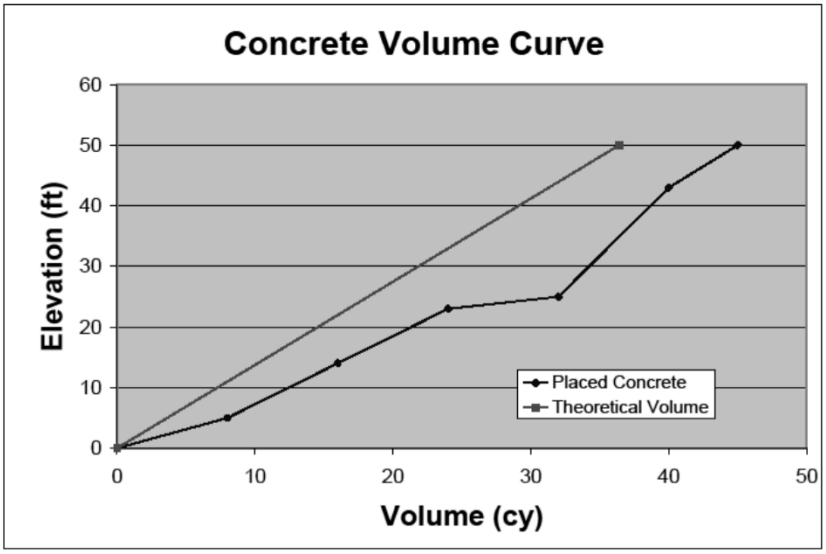

Concrete Volume Curve Exercise

Calculate Theoretical Volume of Shaft

6′ Dia Drilled Shaft

60′ Long

DRILLED SHAFT CONCRETE VOLUMES

PROJECT		BRIDGE NO.	CONTRACT NO	
BENT	STATION	SHAFT NO.	SHAFT DIAMETER	
DRILLED SHAFT CONTRACTOR		INSPECTED BY	CERT. NO.	DATE

CONCRETING CURVE

Prior to pouring concrete, a plot should be made showing the theoretical concrete surface (by depth or elev.) vs. concrete volume placed. During concrete placement the actual concrete surface vs. the actual concrete volume placed is then plotted.

Shaft Top

DEPTH/ELEVATION (Feet

Shaft Bottom

CONCRETE VOLUME PLACED (cubic yards)

VOLUME CALCULATIONS

Volume Delivered	TVD	____ cy	Notes/Comments: _____
Volume in Lines	VL	____ cy	_____
Wastage	VW	____ cy	_____
Volume Placed (= TVD-VL-VW)	VP	____ cy	_____
Theoretical Volume ($\pi(D^2/4)$(Shaft Length,ft)/27)	VT	____ cy	_____
Overpour (VP-VT)	OP	____ cy	_____

Convert Field Measurements

Each truck holds 7cy and the depth of the concrete after each truck are shown (no waste):

Tr	CY	Depth Ft	Accum. Volume	Elev.
0.	0	60	0	0
1.	7	56	_____	_____
2.	7	49	_____	_____
3.	7	42	_____	_____
4.	7	40	_____	_____
5.	7	33	_____	_____
6.	7	20	_____	_____
7.	7	13	_____	_____
8.	7	02	_____	_____
9.	7	0	_____	_____

Plot the concrete curve on the next sheet.
What issues may there be?

Post Construction Activities

Post Construction

Section 00512.49 (a) Scheduling and Restrictions –

For 24 hours after completion of concrete placement in a newly-constructed shaft, including withdrawal of casing if applicable, Do Not, within 15 feet of the shaft:

- Excavate adjacent shafts.
- Construct footings.
- Apply equipment wheel loads.
- Introduce vibrations with a velocity greater than 1/4 inch per second.

Top of shaft concrete contaminated

Cage Alignment

Typical Problem

Very large defect found by Sonic Echo test. Probably due to dirty hole.

No concrete

Post Construction Testing

Cross-hole Sonic Log (CSL) Testing

CSL testing is performed on the First Shaft constructed and others as described in SP 0512.

Additional shafts are tested if:

- Construction methods change or
- Shaft construction results in questionable quality shafts.

This is especially true for uncased shafts, excavated below the water level in soils.

Crosshole Sonic Logging

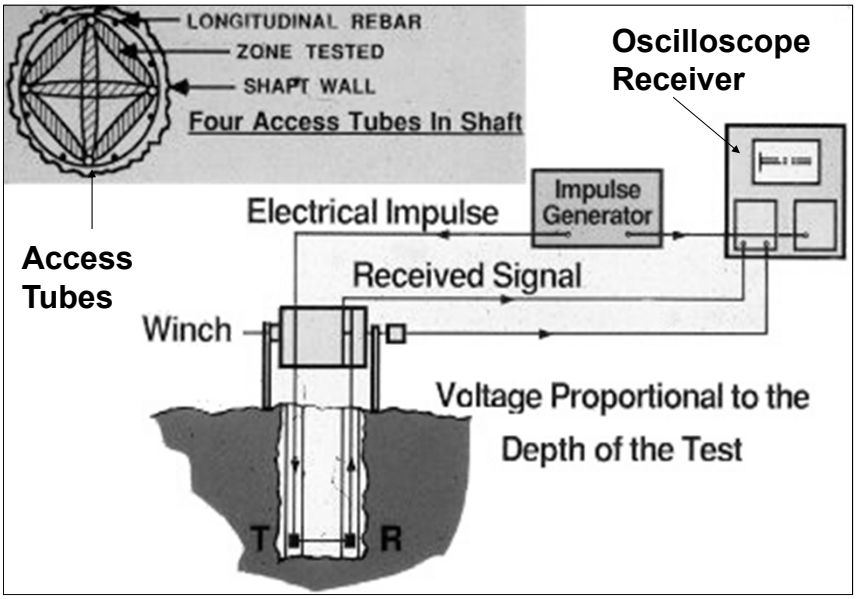

Source and Receiver Tools for CSL Test

Crosshole Sonic Log Test Results

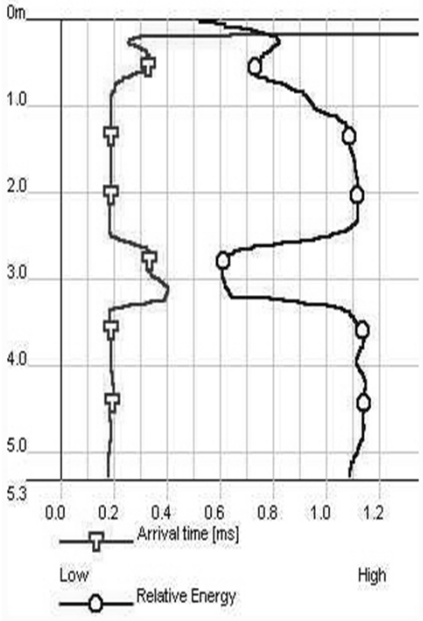

Crosshole Sonic Log Test Results

<u>IF AN ANOMALLY IS DETECTED:</u>

The Engineer will determine course of action.

May include:

- Additional CSL testing
- Excavation around shaft to expose defect
- Core Drilling
- Down-hole cameras

Whatever the course of action is, the Engineer will want to review all of the shaft construction records to try and determine what caused the problem.

Concrete Coring

- Number of holes, locations and depths determined by Engineer.
- Log the boring like a regular borehole.
- Take photos.
- Record any driller comments on concrete quality.

Core Sample
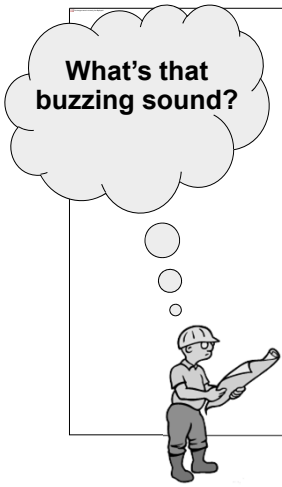
SAFETY, SAFETY, SAFETY