Unit 9

00700
Wearing Surfaces

00700 – Roadwork

- Safety Edge (738 Special Provisions)
- Asphalt Concrete Pavement (ACP) (745)
- Miscellaneous ACP Structures (749)
- Miscellaneous PCC Structures (759)

Unit 9 Topics:

- Safety edge (Special Provision)
- Basics of Asphalt Concrete Pavement (ACP)
- ACP measurement and payment
- Construction of miscellaneous ACP structures
- Construction of miscellaneous PCC structures

00738 – Safety Edge

00745 ACP – Statistically Accepted

- Job Mix Formula (JMF)
- Sublot 1000 tons
- Wearing course is the top lift of ACP, regardless of thickness

ACP Job Mix Formula

- ODOT lab report
- Mixing and compaction temperatures ranges
- Design theoretical maximum specific gravity (Gmm)

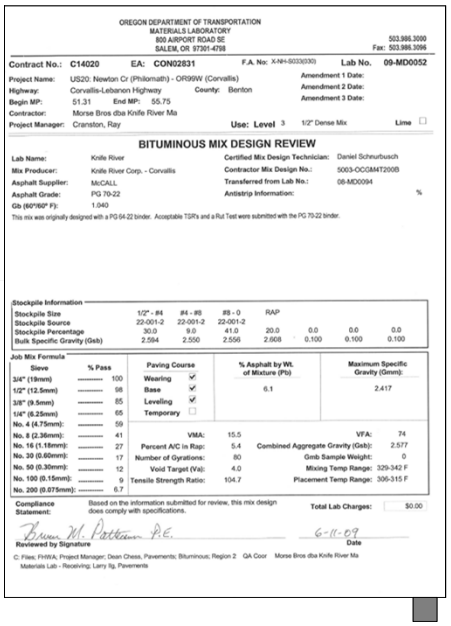

OREGON DEPARTMENT OF TRANSPORTATION
MATERIALS LABORATORY
800 AIRPORT ROAD SE
SALEM, OR 97301-4798
503.986.3000
Fax: 503.986.3096

Contract No.: C14020 EA: CON02831 F.A. No: X-NH-5033(030) Lab No. 09-MD0052

Project Name: US20: Newton Cr (Philomath) - OR99W (Corvallis)
Highway: Corvallis-Lebanon Highway County: Benton
Begin MP: 51.31 End MP: 55.75
Contractor: Morse Bros dba Knife River Ma
Project Manager: Cranston, Ray
Amendment 1 Date:
Amendment 2 Date:
Amendment 3 Date:
Use: Level 3 1/2" Dense Mix Lime ☐

BITUMINOUS MIX DESIGN REVIEW

Lab Name: Knife River
Mix Producer: Knife River Corp. - Corvallis
Asphalt Supplier: McCALL
Asphalt Grade: PG 70-22
Gb (60°/60° F): 1.040
Certified Mix Design Technician: Daniel Schnurbusch
Contractor Mix Design No.: 5003-OCG8M7200B
Transferred from Lab No.: 08-MD0094
Antistrip Information: %

This mix was originally designed with a PG 64-22 binder. Acceptable TSR's and a Rut Test were submitted with the PG 70-22 binder.

Stockpile Information

Stockpile Size	1/2" - #4	#4 - #8	#8 - 0	RAP			
Stockpile Source	22-001-2	22-001-2	22-001-2				
Stockpile Percentage	30.0	9.0	41.0	20.0	0.0	0.0	0.0
Bulk Specific Gravity (Gsb)	2.594	2.550	2.556	2.608	0.100	0.100	0.100

Job Mix Formula

Sieve	% Pass
3/4" (19mm)	100
1/2" (12.5mm)	98
3/8" (9.5mm)	85
1/4" (6.25mm)	65
No. 4 (4.75mm):	59
No. 8 (2.36mm):	41
No. 16 (1.18mm):	27
No. 30 (0.60mm):	17
No. 50 (0.30mm):	12
No. 100 (0.15mm):	9
No. 200 (0.075mm):	6.7

Paving Course		% Asphalt by Wt. of Mixture (Pb)	Maximum Specific Gravity (Gmm):
Wearing	☑	6.1	2.417
Base	☑		
Leveling	☑		
Temporary	☐		

VMA:	15.5	VFA:	74
Percent A/C in Rap:	5.4	Combined Aggregate Gravity (Gsb):	2.577
Number of Gyrations:	80	Gmb Sample Weight:	0
Void Target (Va):	4.0	Mixing Temp Range:	329-342 F
Tensile Strength Ratio:	104.7	Placement Temp Range:	306-315 F

Compliance Statement: Based on the information submitted for review, this mix design does comply with specifications.
Total Lab Charges: $0.00

Reviewed by Signature: Brian M. Patterson P.E.
Date: 6-11-09

C: Files; FHWA; Project Manager; Dean Chess, Pavements; Bituminous; Region 2 QA Coor Morse Bros dba Knife River Ma
Materials Lab - Receiving; Larry Ilg, Pavements

Expectations of Paving Inspectors

- Lay out expectations at pre-paving meeting
- Point out problems while they are occurring, not after the fact
- Work with Contractor to resolve problems

OREGON DEPARTMENT OF TRANSPORTATION
MATERIALS LABORATORY
800 AIRPORT ROAD SE
SALEM, OR 97301-4798

503.986.3000
Fax: 503.986.3096

Contract No.: C14769 **EA:** CON03709 **F.A. No** STP-S002(153) **Lab No.** 15-MD0086

Project Name: FFO - US730: Powerline Road Intersection Improvements
Highway: Columbia River Highway **County:** Umatilla
Begin MP: 182.53 **End MP:** 182.54
Contractor: Pioneer Construction, Inc.
Project Manager: Roundtree, Jay

Amendment 1 Date:
Amendment 2 Date:
Amendment 3 Date:

Use: Level 3 1/2" Dense Mix

BITUMINOUS MIX DESIGN REVIEW

Lab Name: Carlson Testing
Mix Producer: Pioneer Asphalt
Asphalt Supplier: McCall
Asphalt Grade: PG64-28
Gb (60°/60° F): 1.041

Certified Mix Design Technician: Greg Leeper
Contractor Mix Design No.: T13-010
Transferred from Lab No.:
Antistrip Information: %

Stockpile Information

Stockpile Size	1/2" - #4	#4 - 0	Lime	RAP			
Stockpile Source	30-068-5	30-068-5	Gmont	Stkpile			
Stockpile Percentage	33.0	42.0	0.0	25.0	0.0	0.0	0.0
Bulk Specific Gravity (Gsb)	2.752	2.701	2.270	2.694	0.100	0.100	0.100

Job Mix Formula

Sieve	% Pass
3/4" (19mm)	100
1/2" (12.5mm)	92
3/8" (9.5mm)	82
1/4" (6.25mm)	65
No. 4 (4.75mm):	57
No. 8 (2.36mm):	38
No. 16 (1.18mm):	25
No. 30 (0.60mm):	17
No. 50 (0.30mm):	12
No. 100 (0.15mm):	9
No. 200 (0.075mm):	6.6

Paving Course	
Wearing	☑
Base	☑
Leveling	☐
Temporary	☐

% Asphalt by Wt. of Mixture (Pb)	Maximum Specific Gravity (Gmm):
5.5	2.547

VMA:	14.9	VFA:	73
Percent A/C in Rap:	4.7	Combined Aggregate Gravity (Gsb):	2.716
Number of Gyrations:	80	Gmb Sample Weight:	4815
Void Target (Va):	4.0	Mixing Temp Range:	304-315 F
Tensile Strength Ratio:	84	Placement Temp Range:	283-292 F

Compliance Statement: Based on the information submitted for review, this mix design does comply with specifications.

Total Lab Charges: $0.00

Reviewed by Signature

30 July 2015
Date

C: Files; Project Manager; Chris Duman, Pavements; Bituminous; Region 5 QA Coord; Larry Ilg, Pavements

Pioneer Construction, Inc.

Paving around Existing Guardrail

Standard Drawing RD400

- Pave to the edge of post
- Compact under guardrail
- Modified paving extension

Ticket Taker Responsibilities
(if you have them)

- Document location and time of placed material
- Yield calculations
- Check for overloads
- Monitor temperature
- Be safe

In-Place Air Voids (Compaction)
Keys to Performance

ODOT MATERIALS & INSPECTION

Oregon Department of Transportation

MATERIAL DELIVERY & YIELD CHECK SHEET

Page ____ of ____

PROJECT		CONTRACT	
DATE		SOURCE	
BID ITEM		MATERIAL	

MATERIAL DELIVERY

LOAD #	TICKET #	QUANTITY DELIVERED	LOCATION PLACED	TIME DELIVERED	REMARKS
1					
2					
3					
4					
5					
6					
7					
8					
9					
10					
	(A) Total				

(B) THEORETICAL YIELD CALC: (Width x Length x (Depth/12) x (MAMD * %Comp./100) / 2000) = TONS

WIDTH (Feet)	LENGTH (Feet)	DEPTH (Inches)	MAMD	% COMPACTION	THEORETICAL TONS

(C) COMPARISON CALC: (A/B) X 100 **(D) % TOLERANCE CALC:** (100-C) (must be within +/- 10% tolerance)

Ten Load Yield (A)	
Theoretical Tons (B)	
Comparison (C)	
% Tolerance (D)	

	*** Initial here if yield calculations are not applicable due to irregular areas or lack of consistent placement**

Inspected by (Print Name) _____ Inspected by (Signature) _____ Date _____

OFFICE USE ONLY

Checked by (Print Name) _____ Checked by (Signature) _____ Date _____

Quantity This Note _____ Pay Unit _____ ☐ Quality Checked

Estimate Number _____ Note No. _____ ☐ Quantity Checked

734-2792 (06-2015) http://www.oregon.gov/ODOT/HWY/CONSTRUCTION/Pages/HwyConstForms1.aspx

Oregon Department of Transportation

MATERIAL DELIVERY & YIELD CHECK SHEET

Page ____ of ____

PROJECT		CONTRACT	
DATE		SOURCE	
BID ITEM		MATERIAL	

LOAD #	TICKET #	QUANTITY DELIVERED	LOCATION PLACED	TIME DELIVERED	REMARKS
11					
12					
13					
14					
15					
16					
17					
18					
19					
20					
	Subtotal				
	Running Total				

LOAD #	TICKET #	QUANTITY DELIVERED	LOCATION PLACED	TIME DELIVERED	REMARKS
21					
22					
23					
24					
25					
26					
27					
28					
29					
30					
	Subtotal				
	Running Total				

Importance of Compaction

- Improve mechanical stability
- Improve resistance to permanent deformation
- Reduce moisture penetration
- Improve fatigue resistance
- Reduce low-temperature cracking potential

ACP Longitudinal Joints

- Offset joints by at least 6 inches
- For wear course, place at lane lines or fog lines (will require survey if layout is complex)
- Construct tight, even, and straight joints

00745 – ACP Measurement and Payment

Weigh Memo (Ticket)
- Tally sheet
- Location of material
- Certified scale
- Check weight
- Document all rejected material

00749 – Miscellaneous ACP Structures

- Road approaches
- Street connections
- Driveways
- Guardrail flares

00749 – Miscellaneous ACP Structures

- Furnish Level 2, ½" ACP unless otherwise shown
- Construct to 1 inch of true line
- Method compaction specification
- Surface smoothness shall not vary more than ¼ inch form 12-foot straightedge

ACP Structures Measurement and Payment

- **Measurement**
  - Weight and extra basis
  - Complete in place basis

Photo of guardrail flare

00759 – Miscellaneous PCC Structures

- Curb and gutters
- Islands
- Driveways
- Sidewalks

00759 – Miscellaneous PCC Structures

Commercial Grade Concrete
Construct to established line and make firm and free of all unsuitable material

00759 – Miscellaneous PCC Structures

- **Joint locations critical**
- **Grade control**
  Check ramps for ADA compliance after completion using Ramp Inspection Form

00759 – Miscellaneous PCC Structures
Curing and Testing

Surface shall not vary mare than ¼ inch from edge when tested with a 12-foot straightedge

Keep public traffic off fresh concrete for at least 7 calendar days

00759 – Miscellaneous PCC Structures

00759.80 Measurement
00759.90 Payment

- Volume and area basis will be limited to neat lines
- Length along the face of structure, including curb tapers or depressed lengths at driveways and ramps

Key Inspection Points:

- Note when paver stops or rollers are not running
- Be proactive with paving…contact resources (PQME) if issues arise
- Pay attention to joints (longitudinal and transverse)
- QCT and visual acceptance of CGC
- Verify lines and grades prior to placing concrete
- Pay attention to ADA ramps
- This is not an exhaustive review of ACP…take HMAC class

Unit 9 Review:

- ✓Safety edge (Special Provision)
- ✓Asphalt Concrete Pavement (ACP)
- ✓ACP measurement and payment
- ✓Construction of Miscellaneous ACP structures
- ✓Construction of Miscellaneous PCC Structures

ODOT MATERIALS & INSPECTION

Spec Notes & Best Practices

June 2015 Number 4

00730 Emulsified Asphalt Tack Coat

Tack Bonding

Ultimate Goal – To produce uniform, complete, and adequate tack coverage to bond asphalt pavements to better resist shear stresses.

Section 00730.11 – Dilution of tack coat material (adding additional water) may be allowed up to a maximum 1:1 ratio with Engineer approval.

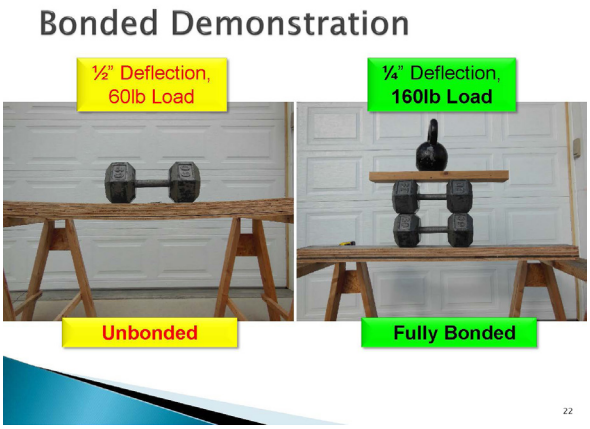

Poorly Bonded Asphalt Pavements

- Reduce fatigue life
- 10% bond loss = approximate 50% less fatigue life
- No bond = approximate 60 to 75% loss of pavement life
- Increase slippage and shoving
- Can be difficul to compact

Resources

- 2015 Oregon Standard Specification for Construction
- ODOT HMAC Inspector Certificatio Manual http://www.oregon.gov/ODOT/HWY/
- Best Practices for Emulsion Tack Coats, NAPA 2013

Technical Contact

Larry Ilg, Pavement Quality & Materials Engineer
503-986-3072
larry.d.ilg@odot.state.or.us

Recommended Application Rates Using Asphalt Emulsions (gallons/square yard)

Condition of Existing Surface	Undiluted Residual Rate (asphalt only in tack)	Undiluted Shot Rate (asphalt and water in tack)	1:1 Diluted Shot Rate (additional water)
New Asphalt (Multilayer)*	0.03 to 0.04	0.04 to 0.06	0.09 to 0.12
Old Asphalt (Overlay)	0.04 to 0.06	0.06 to 0.09	0.12 to 0.18
Milled Asphalt (Inlay)	0.04 to 0.08	0.06 to 0.12	0.12 to 0.36
Portland cement concrete	0.04 to 0.06	0.06 to 0.09	0.12 to 0.18

*If tack coat is applied to newly paved ACP surface the residual rate may be reduced to 0.02 gallons/square yard.

Application Rate Multiplication Factors**

Type of Tack Coat Material	Multiplier Factor (to maintain residual asphalt)
Asphalt Binder (Hot Tack)	1.0
Undiluted Asphalt Emulsion	1.5
1:1 Diluted Asphalt Emulsion	3.0

** The application rate for diluted asphalt emulsions needs to be adjusted to maintain the same residual rate of tack

Tack Dilution Advantages and Disadvantages

Advantage

- Easier to provide a uniform coverage
- Less Likely to plug nozzles
- Diluted tack may track less

Disadvantages

- May take longer for tack to break (water and asphalt separate)
- May be prone to run-off
- Difficul to measure and confir rate
  - » May need ODOT lab test for dilution rate
- Difficul to calculate undiluted asphalt emulsion for payment

Distributor Checklist

- Adequate distributor pressure for even tack flo
- Application rate (calculate for proper residual rate)
- Temperature of emulsion
  - » Asphalt emulsions typically 130° to 160° F
  - » PG type asphalt binder typically 350° to 400° F
- Bar height (ensure triple coverage)
- Correctly sized nozzle clean and free-flowin
- Nozzle angle setting 15 to 30 degrees

Continued on back

Controls to Minimize Tracking of Emulsified Tack

- Minimize construction vehicle traffi especially when tack is breaking
- Prior to tack application, make sure all surfaces are clean especially with grinding operations
- Apply evenly across surface
- Dilute asphalt emulsions
- Use alternate approved asphalt emulsion (CSS-1H)
- Contact the asphalt emulsion supplier for other methods

Asphalt Emulsion (Tack) Breaking and Setting

- Look for the color to change: brown to black
- Supplier can adjust tack formulation to increase/decrease set time if needed
- Variables that may affect break time
  - » Weather (damp weather will delay set time)
  - » Uniformity of tack coat (pooled tack will set slower)
  - » Type of tack (softer tacks will set slower)
  - » Initial temperature of tack (lower tack temperature will delay set time)
  - » Ambient temperature (cooler temperatures will delay set time)

Sampling and Handling of Asphalt Emulsions

- Sample **undiluted** asphalt emulsions
- Use non-metallic containers for the sample storage
- Keep sample out of direct sunlight
- Do not excessively jostle or disturb sample
- Deliver to the ODOT materials laboratory as soon as possible
- Material should be tested within 30 days of sampling

Spec Notes are prepared for inspectors by the Construction Quality Assurance Unit to provide background information around design elements and specifications. For additional Spec Notes, visit us at http://www.oregon.gov/ODOT/HWY/CONSTRUCTION/Pages/QAIndex.aspx.

If you have an idea for a Spec Notes topic, please e-mail us at ODOTConstructionTraining@odot.state.or.us or contact us at 503.986.5453.

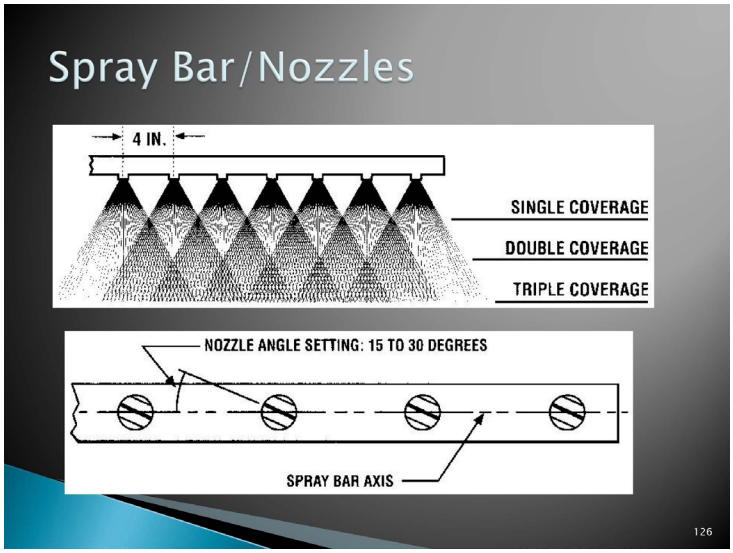

Construction vehicle traffic on tack

- Minimize construction vehicle traffi as much as possible.
- Stagger vehicle traffi to minimize tack pick up
- Best to allow tack to set completely (all water evaporated) before allowing construction vehicle traffi on tack
- May allow construction vehicle traffi on fresh non-breaking tack coat though equipment may have slippage or traction issues
- Avoid all traffi while tack is breaking or in a flocculan state where the water is evaporating away from the asphalt

Tack Yield Calculations

Multiply shot rate (gals/yd$^{2)}$ by binder ratio (typically 2/3 or 1/3) to get residual rate

Mass Method (recommended for full load applications)
Length X Width (feet) of area covered = Area
Net weight of tack used X Gallon conversion[1] = Gallons
Gallons ÷ Area ÷ 9 (convert to square yards) = gals/yd^2

[1]gallon conversion on tack bill of lading

Volume Method
Length X Width (feet) of area covered = Area
Gallons of tack applied X 60° F conversion Factor[2] = Gallons
Gallons ÷ Area ÷ 9 (convert to square yards) = gals/yd^2

[2]see attached temperature volume correction chart for multiplier

Temperature Volume Correction for Emulsified Asphalt[3]

125	0.98375	130	0.98125
135	0.98125	140	0.98000
145	0.97875	150	0.97750
155	0.97625	160	0.97500
165	0.97375	170	0.97250
175	0.97125	180	0.97100
185	0.96875		

[3]Interpolate correction values for temperatures not shown

ODOT MATERIALS & INSPECTION

SPEC Notes

July 2, 2013 Number 3

Longitudinal Joint Construction

- ✓ Discuss longitudinal joint construction at pre-pave meeting
- ✓ Stagger joints at least 6" horizontally from layer below
- ✓ Follow all best practices for HMAC placement
- ✓ Apply tack including face of the joint
- ✓ Overlap existing lane 1" +/-0.5" (overlap milled edge 0.5" for inlays)
- ✓ Avoid pushing material away from the joint. Don't rake!
- ✓ First pass of breakdown roller should be on the hot mat 6" from the cold joint or with a 6" overhang on the cold mat.
- ✓ Check compacted joint to ensure that overlap height is 0.1", confirming that no bridging occurred.

Resources

- 2008 Oregon Standard Specifications for Construction Sec. 00745.61
- ODOT HMAC Inspector Certification Manual *http://www.oregon.gov/ODOT/HWY/CONSTRUCTION/pages/ hmac_inspection_manual.aspx*
- Longitudinal joint training through FHWA, Asphalt Institute *http://www.asphaltinstitute.org/public/engineering/longitudinal-joint-information.dot*

Technical Contact

Larry Ilg, Pavement Quality & Mat'ls Engineer
Phone: 503-986-3072
larry.d.ilg@odot.state.or.us

Spec Notes are prepared by the Construction Section QA Unit for inspectors to provide background information around design elements and specifications.

If you have a topic you would like to see addressed in this format, please contact Jim Doll at ODOT.

745.61 Longitudinal Joints

All pavements have one internal weakness – joints. Premature joint failures are the result of a combination of low density, permeability, segregation and lack of adhesion at the interface. According to a recent FHWA and Asphalt Institute study, improving HMAC joint quality is probably the single most important thing that can be done to improve pavement performance.

Q – So what's so bad about raking?

A – Raking can remove material away from the pavement edge creating a trench area that does not get adequately compacted. As shown in Figure 1 on the next page.

If the red material (Box A) is removed from the hot mat, the roller bridges the area as shown in Box B. When the mat is finally compacted, the area under the wedge of material has experienced no compaction (Box C) so has a high void content and is most likely more permeable than the surrounding mat.

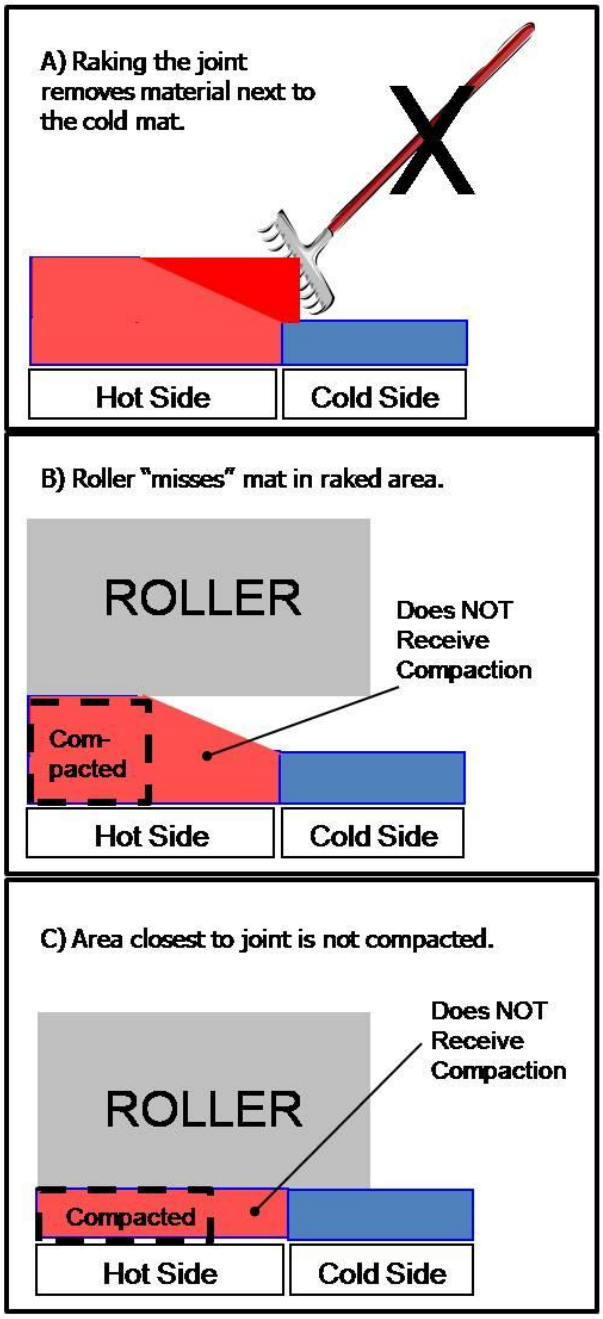

Figure 1. Pushing too much material away from the joint will result in low density at the joint as shown in Box C.

Q – What if the contractor doesn't rake the joint but places hot mix right at the face of the cold joint?

A – This method would be good and fine if all pavements were uniform and smooth. Most contractors use a ski to determine pavement depth that is averaged over the length of the ski.

If there are intermittent high spots along the length of the cold joint, insufficient material will be placed to provide a tight joint. Also, the high spots could be bridged creating marginally compacted areas as shown above.

Q – What is the best process for building a longitudinal joint?

A – Best practices include:

- First, overlap the existing lane (of a butt joint constructed with the paver) 1 inch +/-0.5". When the butt joint is constructed by milling or cutting back the existing lane, the overlap should be about ½ inch. If the overlap exceeds 1.5", carefully remove the excess with a shovel. See Figure 2.

- Don't rake the joint and only bump the joint if more material is needed. Ensure that enough material is at the joint - thickness of rolldown – 25% (2" lift – ½").

- Compact the supported edge of joint with the first pass of vibratory roller drum on the hot mat, but staying back from the joint 6 to 8" on the 1st pass. The 2nd pass should then overlap onto the cold mat 4 to 6". Watch for any stress cracks developing in the mat that are parallel and 6 to 8" off the joint. If cracks develop, switch to the method presented in the next bullet.

- An alternative compaction process is to have the 1st pass of the vibratory roller on the hot mat overlapping 4 to 6" onto the cold mat. A concern is that if an insufficient depth of HMAC is placed next to the cold mat (starving the joint), the roller will bridge over and not compact the hot material completely as shown in Figure 1.

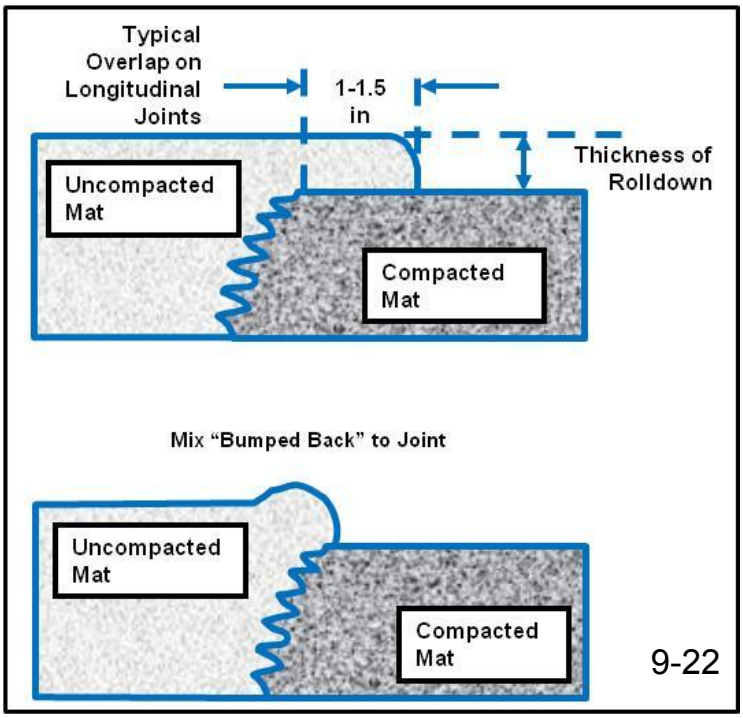

Figure 2. Best practices for placing mix at a longitudinal joint.

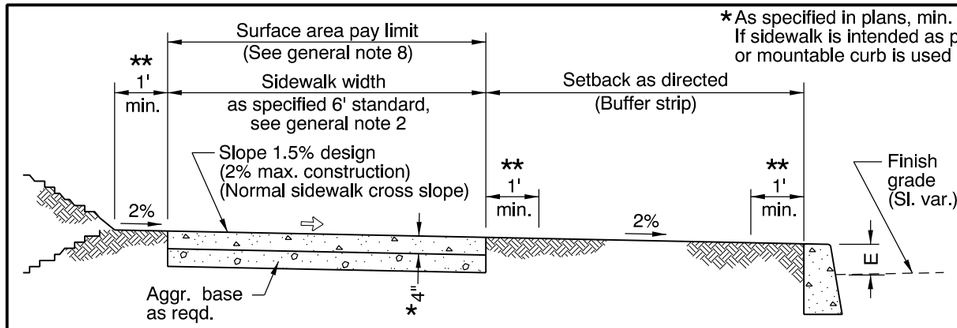

TYPICAL SETBACK SIDEWALK CROSS SECTION
E = curb exposure, see general note 6

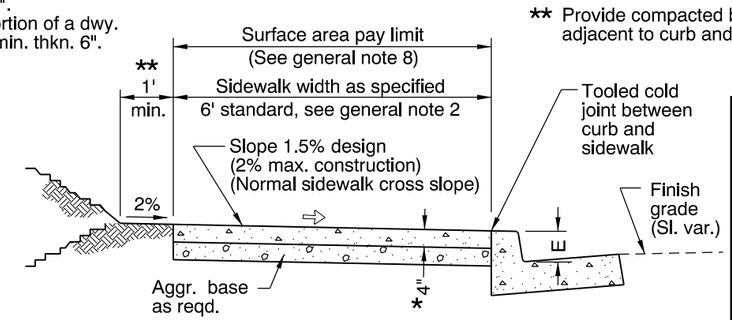

TYPICAL CURB SIDEWALK CROSS SECTION
E = curb exposure, see general note 6

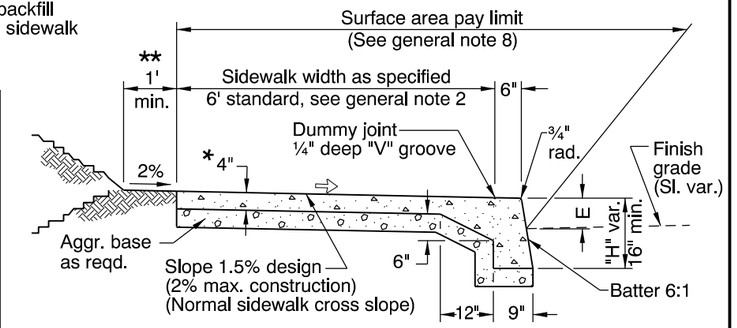

TYPICAL MONOLITHIC CURB & SIDEWALK
E = curb exposure, see general note 6

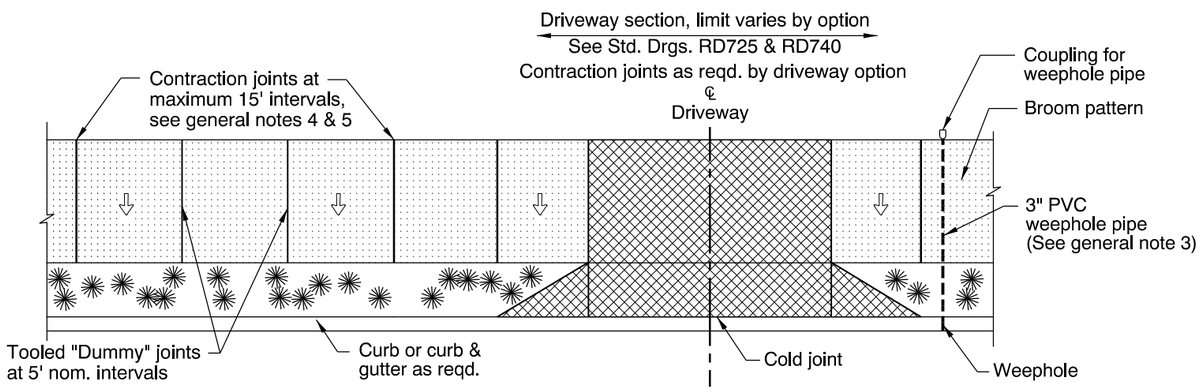

TYPICAL PLAN VIEW - SEPARATED SIDEWALK

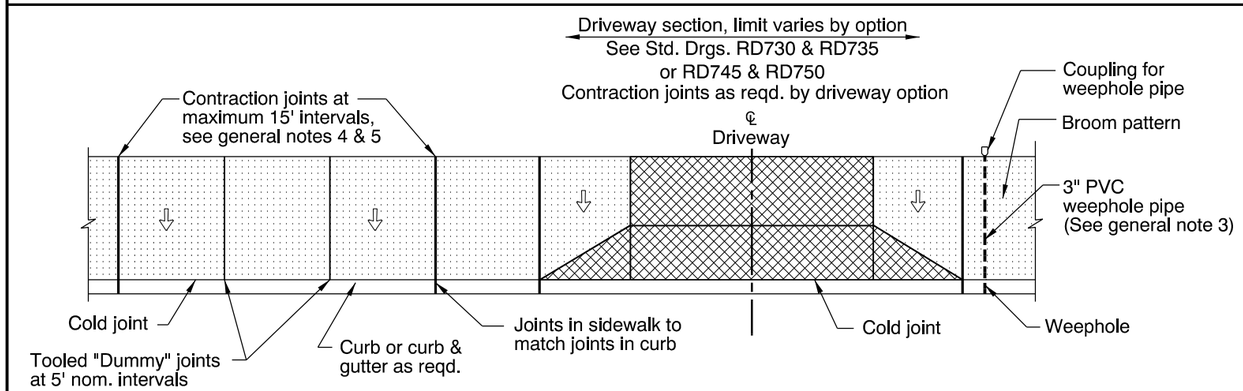

TYPICAL PLAN VIEW - CURB LINE SIDEWALK

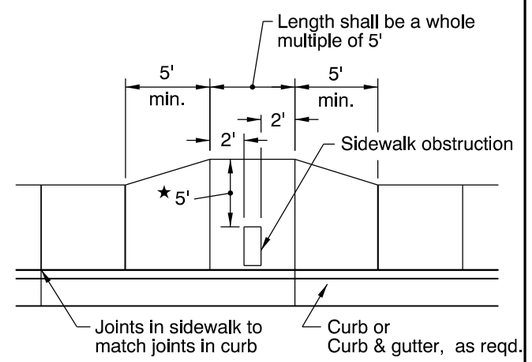

★ When site constraints prohibit a 5' passage, the Engineer may direct this to be reduced, but no less than 4'.

REQUIRED SIDEWALK WIDENING AROUND OBSTRUCTIONS

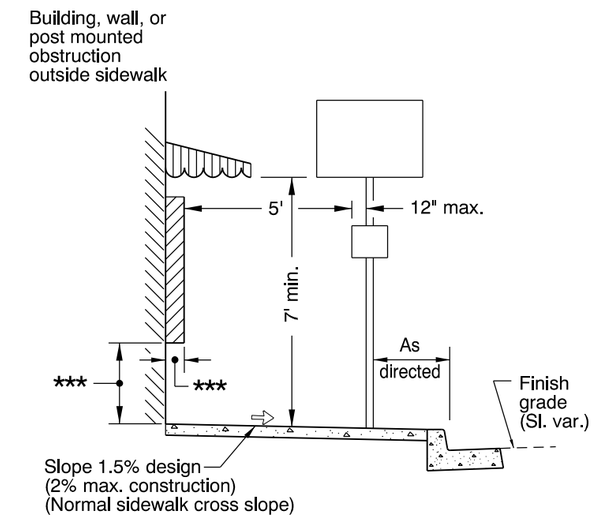

*** Objects with base below 2'-4" may protrude any distance as long as the 5' circulation path is maintained. When an object with a base higher than 2'-4" protrudes further than 4" provide a curb below protrusion to delineate edge.

CLEAR CIRCULATION PATH

Sidewalk

General configuration of driveway pay limit (See general note 8), varies by option.

Slope 1.5% design
(2% max. construction)
(Normal sidewalk cross slope)

GENERAL NOTES FOR ALL DETAILS:

1. Include additional paved or unpaved 2' clearance to vertical faces higher than 5' such as retaining walls, sound walls, fences and buildings.
2. Curb type and sidewalk width as shown on plans or as directed. On sidewalks 8' and wider, provide a longitudinal joint at the midpoint.
3. Install 3" pvc weephole pipes in sidewalks where shown on plans, and allowed by jurisdiction. Place contraction joint over top of pipe.
4. Const. expansion joints at 200' maximum spacing, and at points of tangency, and at ends of each driveway. For monolithic curb & sidewalk, const. expansion joints at 45' maximum spacing.
5. Const. contraction joints at 15' maximum spacing, and at ends of each driveway and ramp.
6. For curb details, see Std. Drgs. RD700 & RD701.
7. Sidewalk details are based on United States Access Board Standards.
8. For driveway details not shown, see Std. Drgs. RD725, RD730, RD735, RD740, RD745 & RD750.
9. See project plans for details not shown.

The selection and use of this Standard Drawing, while designed in accordance with generally accepted engineering principles and practices, is the sole responsibility of the user and should not be used without consulting a Registered Professional Engineer.

CALC. BOOK NO. N/A

BASELINE REPORT DATE 21-JUL-2015

NOTE: All material and workmanship shall be in accordance with the current Oregon Standard Specifications

OREGON STANDARD DRAWINGS

SIDEWALKS

2015

DATE	REVISION DESCRIPTION
01-2015	REVISED DETAILS & ADDED NOTES
07-2015	REVISED NOTES

rd720.dgn 21-JUL-2015

RD720

Effective Date: December 1, 2015 - May 31, 2016