STATE	PROJECT	SHEET NUMBER
OR	PFH 163(19)	A.1

U. S. DEPARTMENT OF TRANSPORTATION
FEDERAL HIGHWAY ADMINISTRATION

Project Location

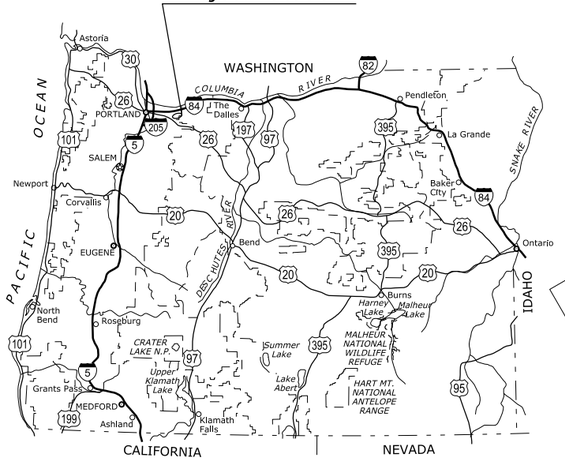

OREGON KEY MAP

REGISTERED PROFESSIONAL ENGINEER
85529PE
OREGON
JULY 12, 2011
DAVID ALTON KAY DALEO
EXPIRES: 12/31/2015

PRELIMINARY
NOT FOR CONSTRUCTION

PLANS FOR PROPOSED PROJECT

OR PFH 163(19)

HISTORIC COLUMBIA RIVER HIGHWAY STATE TRAIL

LINDSEY CREEK TO STARVATION CREEK TRAILHEAD
HOOD RIVER COUNTY
OREGON
LENGTH 1.32 MILES

APPROVED:

_____ DATE _____

Director, Project Delivery,
Western Federal Lands Highway Division

TYPE OF CONSTRUCTION:

Grading, base, paving, structures and drainage

SPECIFICATION:

Standard Specifications for Construction of Roads and Bridges on Federal Highway Projects, FP-14 US Customary Units

PLANS PREPARED FOR

U.S. DEPARTMENT OF TRANSPORTATION
FEDERAL HIGHWAY ADMINISTRATION
WESTERN FEDERAL LANDS HIGHWAY DIVISION
VANCOUVER, WASHINGTON

FEDERAL LANDS HIGHWAY
COMMITMENT TO EXCELLENCE

PLANS PREPARED BY

CH2MHILL

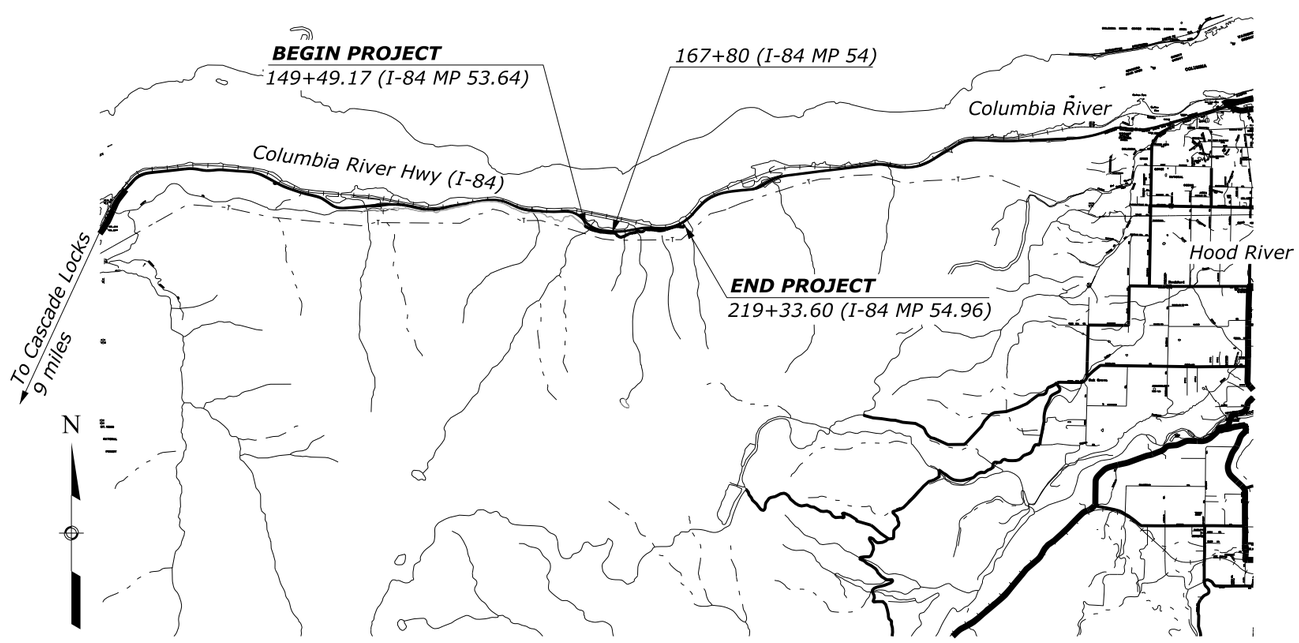

Scale in miles
1 .5 0 1 2 3

INDEX TO SHEETS

A. GENERAL INFORMATION
A.1 TITLE SHEET
A.2 PLAN SYMBOLS AND ABBREVIATIONS
A.3 VICINITY MAP

B. SUMMARY OF QUANTITIES
B.1-B.4 SUMMARY OF QUANTITIES

C. TYPICAL SECTIONS
C.1 TABULATION OF TYPICAL SECTION QUANTITIES
C.2-C.7 TYPICAL SECTIONS

D. PLAN-PROFILE
D.1 TABULATION OF TRAIL QUANTITIES
D.2 CURVE DATA TABLE
D.3-D.8 PLAN AND PROFILES

E. ACCESS ROADS AND TRAIL DETAILS
E.1 ACCESS ROAD AND APPROACH DETAILS
E.2 TURNOUT DETAILS
E.3 MEDALLION AND V-FENCE DETAILS
E.4 GABION BASKET DETAIL
E.5 ROCKERY DETAIL

F. EROSION CONTROL
F.1 TABULATION OF EROSION CONTROL QUANTITIES
F.2-F.7 EROSION CONTROL PLAN AND PROFILES
F.8 EROSION CONTROL NOTES
F.9-12 EROSION CONTROL DETAILS

G. DRAINAGE
G.1 TABULATION OF DRAINAGE QUANTITIES
G.2-G.7 DRAINAGE PLAN AND PROFILES
G.8-G.11 PIPE CULVERT PLAN AND PROFILES

H. SAFETY FEATURES
H.1-H.4 PEDESTRIAN RAIL DETAILS
H.5 BOLLARD DETAILS
H.6-H.14 ODOT STANDARD DETAILS

I. LANDSCAPING
I.1-I.19 LANDSCAPING DETAILS

J. TEMPORARY TRAFFIC CONTROL
J.1 TABULATION OF TRAFFIC CONTROL QUANTITIES
J.2-J.6 TEMPORARY TRAFFIC CONTROL PLANS

K. PERMANENT TRAFFIC CONTROL
K.1 PERMANENT TRAFFIC CONTROL QUANTITIES
K.2-K.4 PERMANENT TRAFFIC CONTROL PLANS
K.5 PERMANENT TRAFFIC CONTROL DETAILS
K.6-K.12 ODOT STANDARD DETAILS

L. BRIDGE CONSTRUCTION DRAWINGS
L.1-L.11 WARREN CREEK BRIDGE DRAWINGS

M. WALLS
M.1-M.3 WALL W1 DRAWINGS
M.4-M.5 WALL W4 PLAN AND ELEVATIONS
M.6-M.7 WALL W5 PLAN AND ELEVATIONS
M.8-M.9 WALL W4 AND W5 NOTES AND DETAILS
M.10 WALL W5 DETAILS
M.11 WALL W4 AND W5 DETAILS

02/2015 S. Daleo 08/2014 Checked by: C. Clausen 12-Feb-2015 10:03 AM Designed by: ...\ofl6314aa.dgn [Int_ft2D]

Δ	total central angle
Δc	curve central angle
Ø	diameter
θs	spiral central angle
abut.	abutment
ADT	average daily traffic
AH	ahead
appr.	approach
BK	back
BM	bench mark
BP	balance point
br.	bridge
brg.	bearing
cc or c. to c.	center to center
℄	centerline
clr.	clear
CMP	corrugated metal pipe
col.	column
conc.	concrete
conn.	connection
constr. jt.	construction joint
cont.	continuous
CS	point of curve to spiral
ctrs.	centers
CUFT	cubic foot (feet)
culv.	culvert
CUYD	cubic yard(s)
D	diameter
DHV	design hourly volume
dia.	diameter
diag.	diagonal
diaph.	diaphragm
dist.	distance
drwg(s).	drawing(s)
E	east
e	superelevation rate
El. 94.16 ft	elevation with number
elev.	elevation
emb.	embankment
EP	edge of pavement
EQ or eq.	equation
ER	edge of road
EW	edge of water
exc.	excavation
exp. jt.	expansion joint
fin.	finish
flg.	flange
ft2	square foot
ft3	cubic foot (feet)
ftg.	footing
ga.	gage (gauge)
galv.	galvanized
hdwl.	headwall
hex.	hexagon
HW	high water
ID	inside diameter
jt.	joint
L	length of curve
lam.	lamination
lat.	latitude
LNFT	linear foot (feet)
long.	longitudinal
LPSM	lump sum
Ls	length of spiral
lt. or LT	left
LW	low water

M.L.	main line
M.P.	mile post
matl.	material
max.	maximum
MGAL	thousand gallon
min.	minimum
mon.	monument
N	north
NC	normal crown
o. c.	on center
o. to o.	out to out
OD	outside diameter
OG	original ground
PC	point of curve
PCC	point of compound curve
PCS	point of curve to spiral
PI	point of intersection
pl.	plate
POC	point on curve
POS	point on spiral
POT	point on tangent
PS	point of tangent to spiral
PSC	point of spiral to curve
PST	point of spiral to tangent
PT	point of tangent
pvmt.	pavement
R	radius
R.	range
R/W	right-of-way
rdwy.	roadway
reinf.	reinforcement
reqd.	required
rt. or RT	right
rte.	route
S	south
SADT	seasonal average daily traffic
SC	point of spiral to curve
sec.	section
shldr.	shoulder
SLRY	slurry unit
spa.	spacing, spaces or spaced
SQFT	square foot
SQYD	square yard
SRS	point of spiral to reverse spiral
SS	point of spiral to spiral (no curve)
ST	point of spiral to tangent
STA, Sta.	station
std.	standard
stgr.	stringer
stiff.	stiffener
struc.	structural
STS	point of spiral to tangent spiral
sym.	symmetrical
T	tangent distance
T.	township
TBM	temporary bench mark
thd.	thread
TS	point of tangent to spiral
Ts	tangent distance (spiraled curve)
typ.	typical
V	design speed
vph	vehicles per hour
VPI	vertical point of intersection
W	west
yd2	square yard
yd3	cubic yard(s)

NOTE:

1. Other symbols used in the plans will be shown in a legend on the appropriate plan sheet.

National Boundary
State Boundary
County Boundary
City Boundary
Township or Range Line
Section Line
Section Corner (Found, Projected)
¼ Section Line
¼ Section Corner (Found, Projected)
1/16 Section Line
1/16 Section Corner (Found, Projected)
Property Line w/Found Property Corner
Parcel Number
National Park Boundary
National Forest Boundary
National Wildlife Refuge Boundary
BLM Lands Boundary
Indian Reservation Boundary
Existing Roadway (Road, Paved, Gravel)
Railroad
Trail
Wattle
Silt Fence
Intermittent Drainage or Small Creek
Large Creek or River
Lake, Pond or Reservoir; Marshland
Spring or Seep
Treeline; Individual Trees
Material Source; Bore Hole; Test Pit
Spot Elevation; Coordinate Grid Tick
Above Ground Tank; Underground Tank
Boulder; Well; Satellite Dish; Grave
Cooking Grate; Garbage Can; Picnic Table
Flagpole; Fire Hydrant
Gas & Water Meter; Gas & Water Valve
Control Point (Terrestrial and GPS); Jump Hub

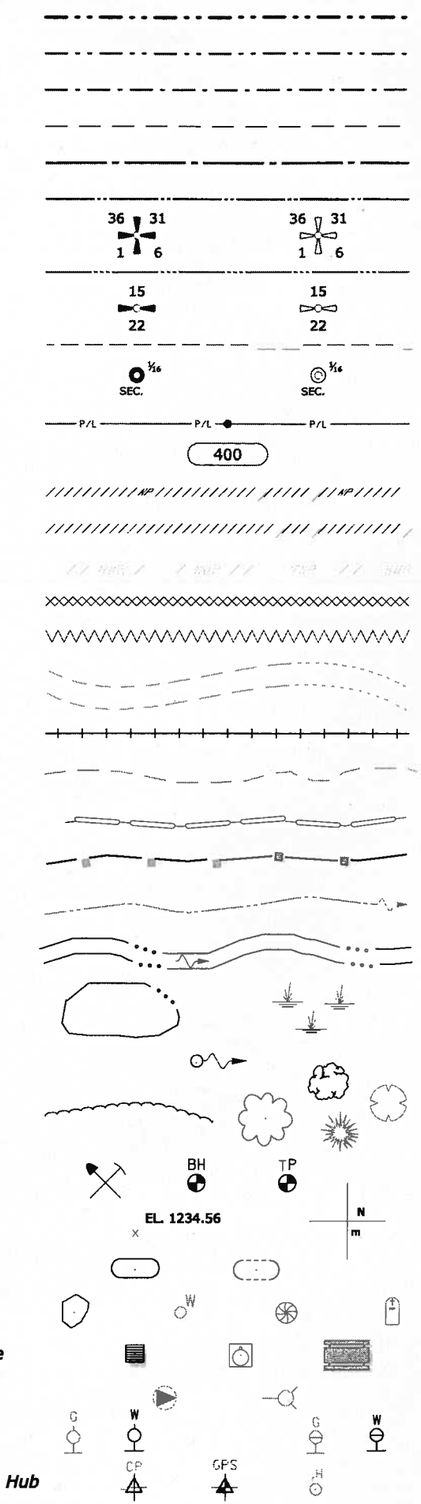

STATE	PROJECT	SHEET NUMBER
OR	PFH 163(19)	A.2

North Arrow

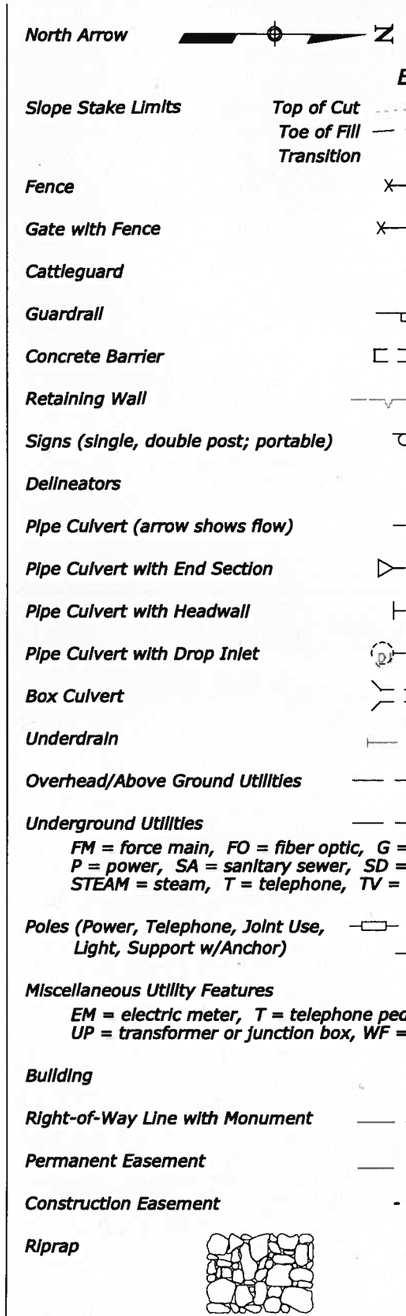

NO SCALE

U.S. DEPARTMENT OF TRANSPORTATION
FEDERAL HIGHWAY ADMINISTRATION
WESTERN FEDERAL LANDS HIGHWAY DIVISION

U.S. CUSTOMARY DETAIL

PLAN SYMBOLS AND ABBREVIATIONS

DETAIL APPROVED FOR USE 11/2001
REVISED: 9/2005 1/2007 10/2009

DETAIL W101-1

16 October 2009 1:08 PM
H:\StanDraw\w10101.dgn [USC]

STATE	PROJECT	SHEET NUMBER
OR	PFH 163(19)	A.3

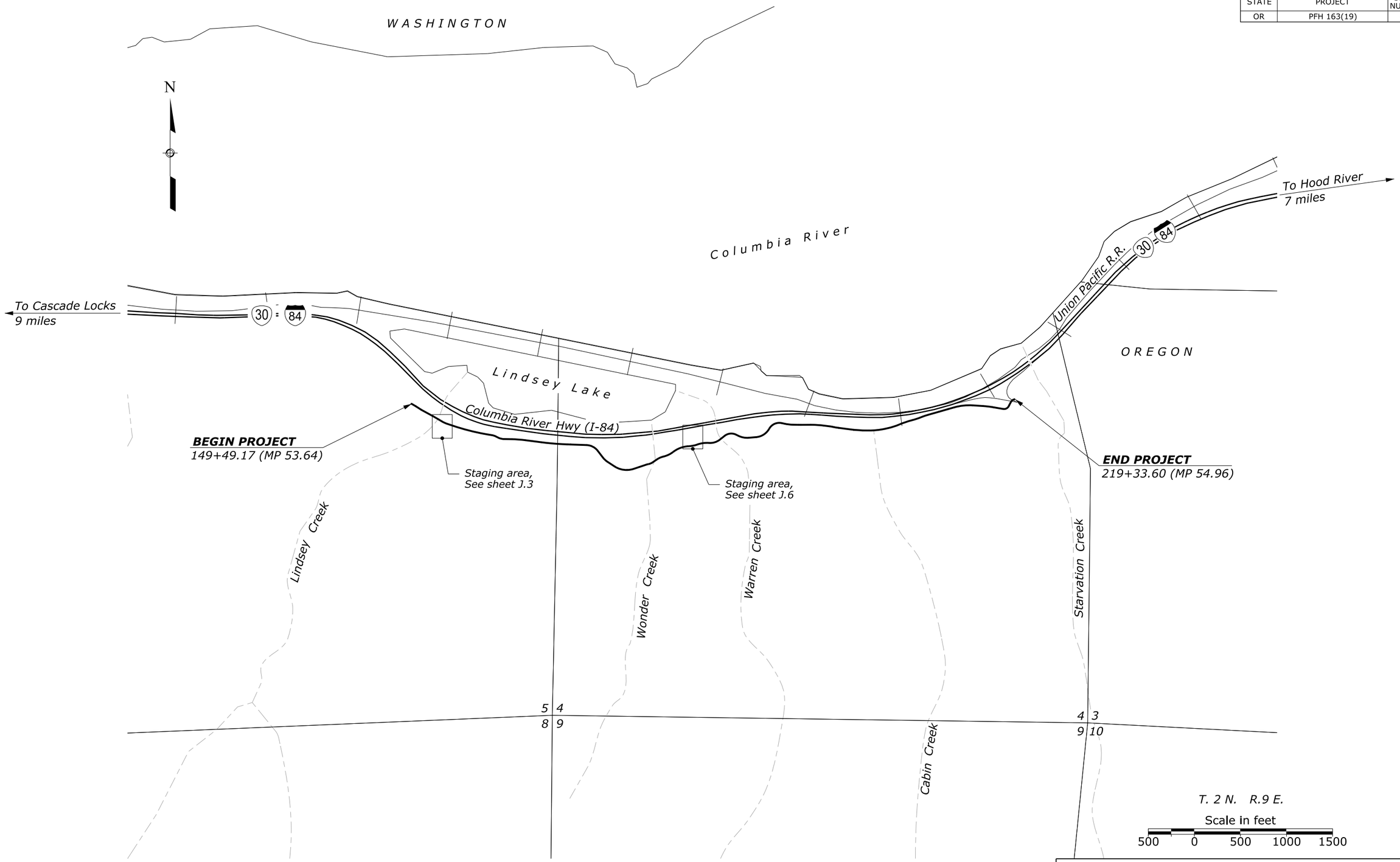

PRELIMINARY
NOT FOR CONSTRUCTION

VICINITY MAP

...\of16314ac.dgn [int_ft2D] | 11-Feb-2015 04:37 PM | Designed by: M. Vasconcellos | 02/2015 | Checked by: S. Daleo | 02/2015

SUMMARY OF QUANTITIES

STATE	PROJECT	SHEET NUMBER
OR	OR PFH 163(19)	B.1

AMEND	Line Item No.	Pay Item Number	Pay Item Description	Unit	Sheet and Description C Typical Section	D Plan, Roadway	E Access Roads And Details	F Soil Erosion Control	G Drainage	I Landscape Architecture	J Temporary Traffic Control	K Permanent Traffic Control	L Bridge	M Walls				Estimated Quantities Bid Schedule	Remarks and/or Determination of Estimated Quantity
	A0020	15101-0000	MOBILIZATION	LPSM														ALL	
	A0040	15201-0000	CONSTRUCTION SURVEY AND STAKING	LPSM														ALL	
	A0060	15301-0010	CONTRACTOR QUALITY CONTROL AND ASSURANCE	LPSM														ALL	
	A0080	15401-0000	CONTRACTOR TESTING	LPSM														ALL	
	A0100	15501-0000	CONSTRUCTION SCHEDULE	LPSM														ALL	
	A0120	15703-2500	SOIL EROSION CONTROL, MULCHING, HYDRAULIC METHOD	ACRE				1.0										1.0	
	A0140	15705-0100	SOIL EROSION CONTROL, SILT FENCE	LNFT				2,100										2,100	
	A0160	15705-1400	SOIL EROSION CONTROL, FIBER ROLL	LNFT				2,000										2,000	
	A0180	15706-1000	SOIL EROSION CONTROL, INLET PROTECTION	EACH				5										5	
	A0200	15706-1600	SOIL EROSION CONTROL, STABILIZED CONSTRUCTION EXIT	EACH				3										3	
	A0220	15706-1800	SOIL EROSION CONTROL, TEMPORARY STONE OUTLET STRUCTURE	EACH				2										2	
	A0240	20101-0000	CLEARING AND GRUBBING	ACRE		8.0												8.0	
	A0260	20301-2400	REMOVAL OF SIGN	EACH								2						2	
	A0280	20302-0200	REMOVAL OF CURB	LNFT		174												174	
	A0300	20302-0700	REMOVAL OF FENCE, ON BARRIER	LNFT		815												815	
	A0320	20302-0700	REMOVAL OF FENCE	LNFT		54												54	
	A0340	20302-1200	REMOVAL OF GUARDRAIL	LNFT		922												922	
	A0360	20302-1300	REMOVAL OF GUARDRAIL, CONCRETE BARRIER	LNFT		88												88	
	A0380	20302-2600	REMOVAL OF PAVEMENT MARKINGS	LNFT						495								495	
	A0400	20303-1600	REMOVAL OF PAVEMENT, ASPHALT	SQYD						105								105	
	A0420	20303-1600	REMOVAL OF PAVEMENT, ASPHALT	SQYD	990													990	
	A0440	20315-0000	SAWCUTTING PAVEMENT	LNFT						260								260	
	A0460	20315-0000	SAWCUTTING PAVEMENT	LNFT	810													810	
	A0480	20401-0000	ROADWAY EXCAVATION	CUYD	2,344													2,344	
	A0500	20410-0000	SELECT BORROW	CUYD	6,236													6,236	
	A0520	20435-1000	BACKFILL, SELECT GRANULAR	CUYD	265													265	
	A0540	20702-0300	GEOTEXTILE FILTER, CLASS 1, TYPE C	SQYD	400													400	
	A0560	20702-0600	GEOTEXTILE FILTER, CLASS 2, TYPE A	SQYD					17									17	
	A0580	20801-0000	STRUCTURE EXCAVATION	CUYD									317					317	
	A0600	20802-0000	FOUNDATION FILL	CUYD									29					29	
	A0620	25101-0100	PLACED RIPRAP, METHOD A, CLASS 1	CUYD					3									3	
	A0640	25101-0300	PLACED RIPRAP, METHOD A, CLASS 3	CUYD	1,405													1,405	

MileStone: PIH
Date Completed: In Progress
Report Date: 2/12/15

12-Feb-2015 12:50 PM \\rosa\Proj\WFLHD\653608HCRHSegD\T3 - Advance Design\Quantities\[WFL Summary (Sheet B.1-B.3).xlsm]Sheet

SUMMARY OF QUANTITIES

STATE	PROJECT	SHEET NUMBER
OR	OR PFH 163(19)	B.2

AMEND	Line Item No.	Pay Item Number	Pay Item Description	Unit	Sheet and Description C Typical Section	D Plan, Roadway	E Access Roads And Details	F Soil Erosion Control	G Drainage	I Landscape Architecture	J Temporary Traffic Control	K Permanent Traffic Control	L Bridge	M Walls				Estimated Quantities Bid Schedule	Remarks and/or Determination of Estimated Quantity
	A0660	25101-0400	PLACED RIPRAP, METHOD A, CLASS 4	CUYD					13									13	
	A0680	25210-0000	ROCKERY	SQFT			1,104											1,104	
	A0700	25302-1000	GABIONS, GALVANIZED OR ALUMINIZED COATED	CUYD		60												60	
	A0720	25501-0000	MECHANICALLY STABILIZED EARTH WALL	SQFT										1,729				1,729	
	A0740	25510-0000	SELECT GRANULAR BACKFILL	CUYD									288					288	
	A0760	25801-0000	REINFORCED CONCRETE RETAINING WALL	SQFT										841				841	
	A0780	26101-0000	REINFORCED SOIL SLOPE	SQFT										2,480				2,480	
	A0800	30101-2000	AGGREGATE BASE GRADING D	TON	3,430													3,430	
	A0820	30111-1000	AGGREGATE SURFACE COURSE, 4-INCH DEPTH	SQYD						62								62	
	A0840	40301-0100	ASPHALT CONCRETE PAVEMENT, TYPE 1	TON						26								26	
	A0860	40301-0100	ASPHALT CONCRETE PAVEMENT, TYPE 1	TON	1,800													1,800	
	A0880	40301-0100	ASPHALT CONCRETE PAVEMENT, TYPE 1, OVERLAY	TON	130													130	
	A0900	41202-0000	TACK COAT	GAL	910													910	
	A0920	41401-2000	CRACK, CLEANING AND SEALING	LNFT	715													715	
	A0940	50101-0700	MINOR CONCRETE PAVEMENT, REINFORCED, 7-INCH DEPTH	SQYD						119								119	
	A0960	50101-TEMP	MINOR CONCRETE PAVEMENT, PLAIN 4-INCH DEPTH	SQYD						79								79	
	A0980	55201-0200	STRUCTURAL CONCRETE, CLASS A (AE), ABUTMENT	CUYD									76					76	
	A1000	55201-0200	STRUCTURAL CONCRETE, CLASS A (AE), DECK	CUYD									41					41	
	A1020	55210-0400	PRECAST STRUCTURAL CONCRETE, CLASS AE, ABUTMENT PILASTERS	CUYD									19					19	
	A1040	55210-0400	PRECAST STRUCTURAL CONCRETE, CLASS AE, ABUTMENT, WINGWALL PILASTERS	CUYD									6					6	
	A1060	55302-3500	PRECAST, PRESTRESSED CONCRETE SLAB	LNFT									144					144	
	A1080	55401-1000	REINFORCING STEEL	LB									17,200					17,200	
	A1100	55601-0500	BRIDGE RAILING, CONCRETE, ORNAMENTAL	LNFT									137					137	
	A1120	56302-1000	PAINTING, CONCRETE STRUCTURE	SQFT		2,035												2,035	
	A1140	60201-0600	18-INCH PIPE CULVERT	LNFT					68									68	
	A1160	60201-1200	48-INCH PIPE CULVERT	LNFT					47									47	

MileStone: PIH
Date Completed: In Progress
Report Date: 2/12/15

\\rosa\Proj\WFLHD\653608HCRHSegD\T3 - Advance Design\Quantities\[WFL Summary (Sheet B.1-B.3).xlsm]Sheet (2)
12-Feb-2015 12:50 PM

SUMMARY OF QUANTITIES

STATE	PROJECT	SHEET NUMBER
OR	OR PFH 163(19)	B.3

AMEND	Line Item No.	Pay Item Number	Pay Item Description	Unit	Sheet and Description													Estimated Quantities	Remarks and/or Determination of Estimated Quantity
					C	D	E	F	G	I	J	K	L	M					
					Typical Section	Plan, Roadway	Access Roads And Details	Soil Erosion Control	Drainage	Landscape Architecture	Temporary Traffic Control	Permanent Traffic Control	Bridge	Walls				Bid Schedule	
	A1180	60203-0100	4-INCH SLOTTED DRAIN PIPE	LNFT						67								67	
	A1200	60520-0000	GRANULAR BACKFILL	CUYD									26					26	
	A1220	60703-0000	CLEANING CULVERTS IN PLACE	LNFT					325									325	
	A1240	60901-5400	CURB, STONE, TYPE 2, 12-INCH DEPTH	LNFT						17								17	
	A1260	60901-5600	CURB, STONE, TYPE 2, 14-INCH DEPTH	LNFT						130								130	
	A1280	60901-6100	CURB, STONE, TYPE 2, 18-INCH DEPTH	LNFT						25								25	
	A1300	60915-1000	WHEELSTOP, CONCRETE	EACH						1								1	
	A1320	61701-1250	GUARDRAIL SYSTEM G4, TYPE 2, CLASS A WOOD POSTS	LNFT		885												885	
	A1340	61801-0000	CONCRETE BARRIER	LNFT		2,026												2,026	
	A1360	61901-0000	FENCE	LNFT		715												715	
	A1380	61904-0000	BOLLARD POST	EACH		3												3	
	A1400	61920-2000	REMOVE AND RESET GATE	EACH		1												1	
	A1420	62002-0000	STONE MASONRY, BASALT FLAGSTONE	SQYD						22								22	
	A1440	62010-0000	STONE MASONRY, FLUSH BASALT CURB	LNFT						140								140	
	A1460	62010-0000	STONE MASONRY, BASALT WALL	LNFT						168								168	
	A1480	62010-0000	STONE MASONRY, BASALT RETAINING/SEAT WALL	LNFT						69								69	
	A1500	62010-0000	STONE MASONRY, BASALT STEPS	LNFT						21								21	
	A1520	62011-5000	STONE MASONRY PILLARS	EACH						13								13	
	A1540	62014-0000	SAMPLE WALL	LPSM						All								ALL	
	A1560	62102-0000	MARKER, BRONZE SIGN	EACH						1								1	
	A1580	62102-0000	MARKER, TRAIL MEDALLION	EACH		2												2	
	A1600	63302-0000	SIGN SYSTEM	SQFT								16						16	
	A1620	63305-1200	POSTS, STEEL, W8 X 21	LNFT								40						40	
	A1640	63316-1000	REMOVE AND RESET SIGN	EACH								6						6	
	A1660	63401-0100	PAVEMENT MARKINGS, TYPE A, SOLID	LNFT						547								547	
	A1680	63405-0450	PAVEMENT MARKINGS, TYPE A, ACCESSIBILITY SYMBOL	EACH						2								2	
	A1700	63502-0100	TEMPORARY TRAFFIC CONTROL, ARROW BOARD, TYPE A	EACH							1							1	
	A1720	63502-0600	TEMPORARY TRAFFIC CONTROL, BARRICADE TYPE 3	EACH							1							1	
	A1740	63502-1300	TEMPORARY TRAFFIC CONTROL, DRUM	EACH							50							50	

MileStone: PIH
Date Completed: In Progress
Report Date: 2/12/15

\\rosa\Proj\WFLHD\653608HCRHSegD\T3 - Advance Design\Quantities\[WFL Summary (Sheet B.1-B.3).xlsm]Sheet (3)
12-Feb-2015 12:50 PM

SUMMARY OF QUANTITIES

STATE	PROJECT	SHEET NUMBER
OR	OR PFH 163(19)	B.4

AMEND	Line Item No.	Pay Item Number	Pay Item Description	Unit	Sheet and Description													Estimated Quantities	Remarks and/or Determination of Estimated Quantity
					C	D	E	F	G	I	J	K	L	M					
					Typical Section	Plan, Roadway	Access Roads And Details	Soil Erosion Control	Drainage	Landscape Architecture	Temporary Traffic Control	Permanent Traffic Control	Bridge	Walls				Bid Schedule	
	A1760	63502-2100	TEMPORARY TRAFFIC CONTROL, CRASH CUSHION	EACH							1							1	
	A1780	63503-0400	TEMPORARY TRAFFIC CONTROL, CONCRETE BARRIER	LNFT							2,130							2,130	
	A1800	63503-1000	TEMPORARY TRAFFIC CONTROL, PLASTIC FENCE	LNFT				600										600	
	A1820	63504-1000	TEMPORARY TRAFFIC CONTROL, CONSTRUCTION SIGN	SQFT							130							130	
	A1840	63507-0700	TEMPORARY TRAFFIC CONTROL, TRAFFIC CONTROL SUPERVISOR	DAY							80							80	
	A1860	63640-0700	RELOCATE ELECTRICAL LINE	LPSM		All												ALL	
	A1880	64603-0500	FIXTURE, BICYCLE STORAGE RACK	EACH						4								4	
	A1900	64603-0700	FIXTURE, PICNIC TABLE	EACH						1								1	
	A1920	64604-3000	FIXTURE, PEDESTRIAN RAILING, 42" BARRIER MOUNTED STEEL	LNFT		815												815	
	A1940	64604-3000	FIXTURE, PEDESTRIAN RAILING, 42" WOOD	LNFT		617												617	
	A1960	64604-3000	FIXTURE, PEDESTRIAN RAILING, 42" WALL MOUNTED STEEL	LNFT		92												92	
	A1980	64604-3000	FIXTURE, PEDESTRIAN RAILING, 22" BARRIER MOUNTED STEEL	LNFT		1,852												1,852	

MileStone: PIH
Date Completed: In Progress
Report Date: 2/12/15

12-Feb-2015 12:50 PM \\rosa\Proj\WFLHD\653608HCRHSegD\T3 - Advance Design\Quantities\[WFL Summary (Sheet B.4).xlsm]Sheet

STATE	PROJECT	SHEET NUMBER
OR	PFH 163(19)	C.1

TABULATION OF TYPICAL SECTION QUANTITIES

ITEM	DESCRIPTION	UNIT	TOTALS	ESTIMATING VALUES
20303-1600	Removal of Pavement, Asphalt	SY	990	
20315-0000	Saw cutting Pavemen:	LNFT	810	
20401-0000	Roadw ay Excavation	CUYD	2344	
20410-0000	Select Borrow	CUYD	6236	
20435-1000	Backfill, Select Granular	CUYD	265	
20702-0300	Geotextile Filter, Class 1, Type C	SQYD	400	
25101-0300	Placed Riprap, Method A, Class 3	CUYD	1405	
30101-2000	Aggregate Base Grading D	TON	3430	1.97 TON/CUYD
40301-0100	Asphalt Concrete Pavement Type 1	TON	1800	150 LBS/CUFT
40301-0100	Asphalt Concrete Pavement Type 1, Overlay	TON	130	150 LBS/CUFT
41202-0000	Tack Coat	GAL	910	0.1 GAL/SQYD
41401-2000	Crack, Cleaning and Sealing	LNFT	715	

TABULATION OF TYPICAL SECTION QUANTITIES

...\of16314ca.dgn [Int_ft2D] 11-Feb-2015 04:18 PM Designed by: C. Clausen 02/2015 Checked by: S. Daleo 02/2015

STATE	PROJECT	SHEET NUMBER
OR	PFH 163(19)	C.2

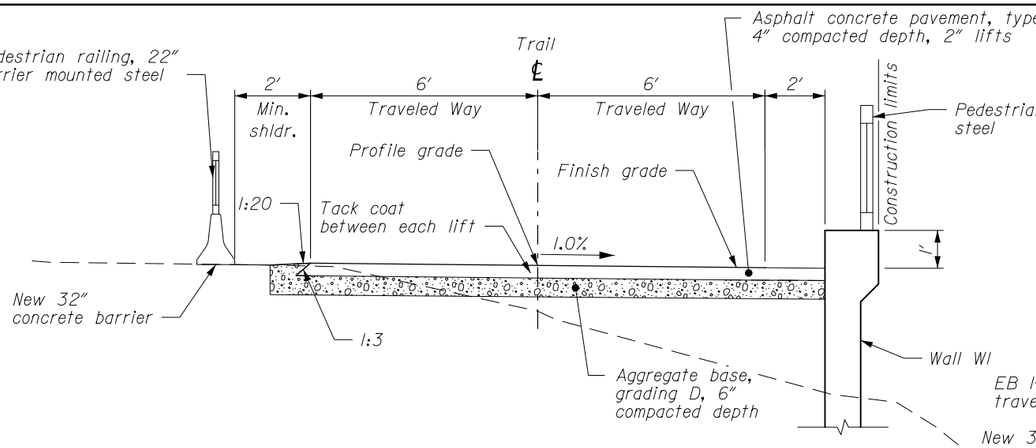

TYPICAL TRAIL SECTION

151+88 to 152+80

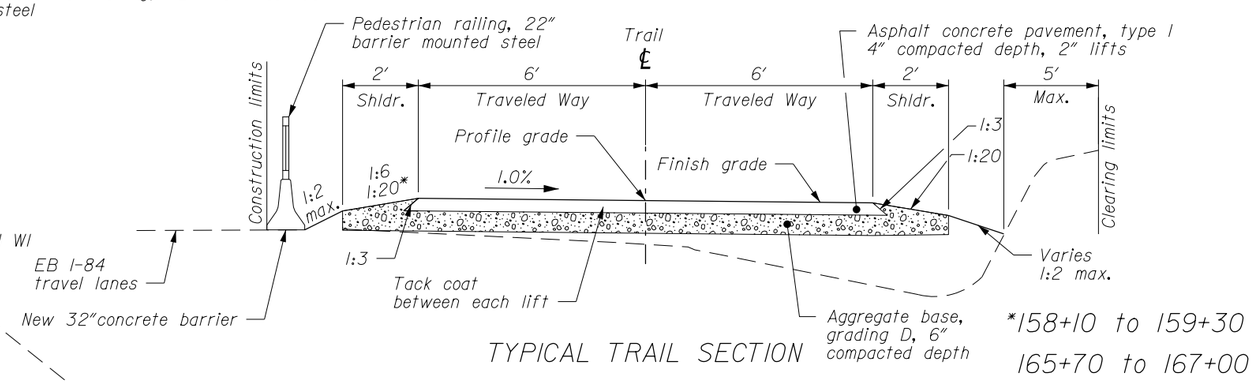

TYPICAL TRAIL SECTION

152+80 to 169+75

*158+10 to 159+30

165+70 to 167+00

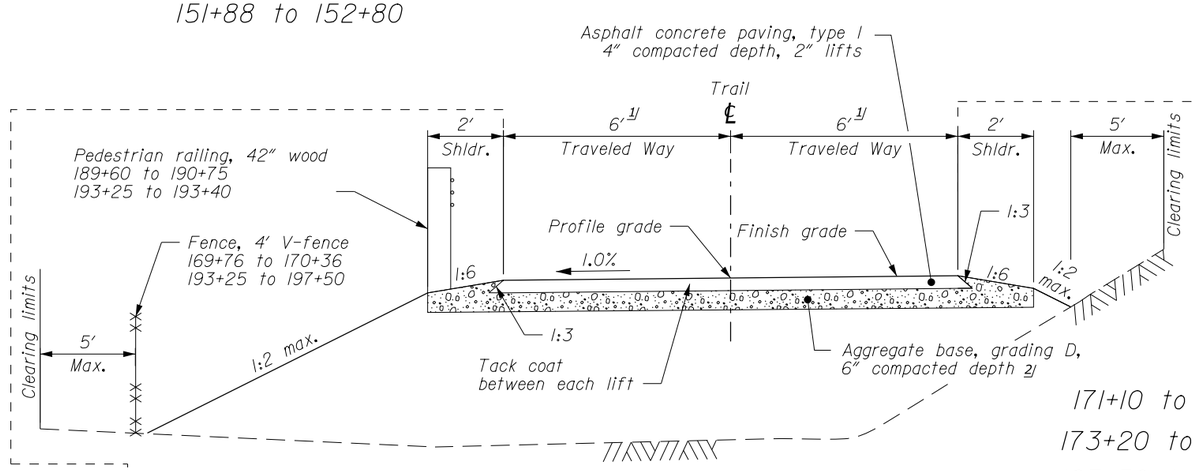

TYPICAL TRAIL SECTION

169+75 to 172+35

173+10 to 177+51

178+30 to 183+80

184+60 to 185+20

189+70 to 190+75

193+25 to 197+40

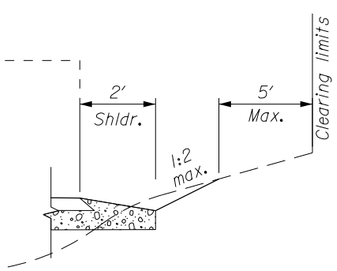

TYPICAL SECTION

171+10 to 172+15

173+20 to 174+50

183+50 to 183+80

184+60 to 184+80

185+10 to 185+20

195+90 to 196+40

197+20 to 197+50

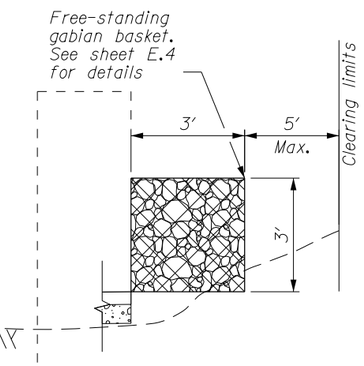

189+70 to 190+30

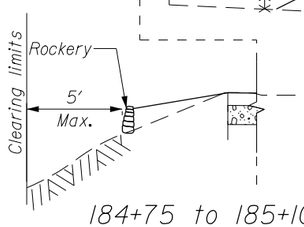

184+75 to 185+10

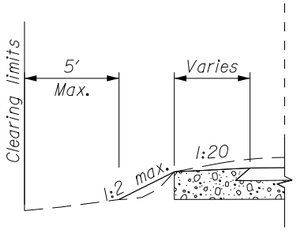

TYPICAL SECTION

171+90 to 172+35

173+10 to 174+70

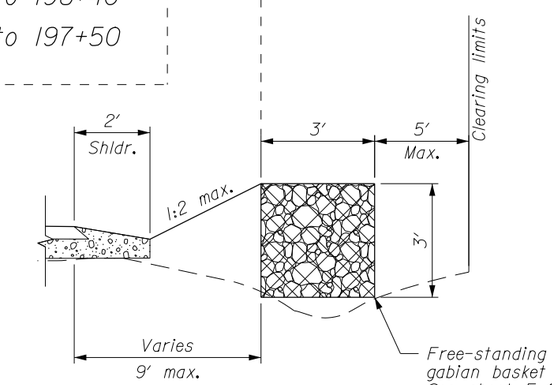

190+30 to 190+75

FOOTNOTE:

1/ Transition right edge from 190+70, 6' right to 190+75, 8' right.
Transition left edge from 193+25, 8' left to 193+32, 6' Left.
Transition left edge from 173+10, 5' left to 173+20, 6' left.

2/ Place aggregate base, grading D, 8" compacted depth
170+27 to 171+74.

NO SCALE

TYPICAL SECTIONS

02/2015 | S. Daleo | 02/2015 | C. Clausen | 12-Feb-2015 10:08 AM | ...\of16314cb.dgn [Int_ft2D]
Checked by: | Designed by:

STATE	PROJECT	SHEET NUMBER
OR	PFH 163(19)	C.3

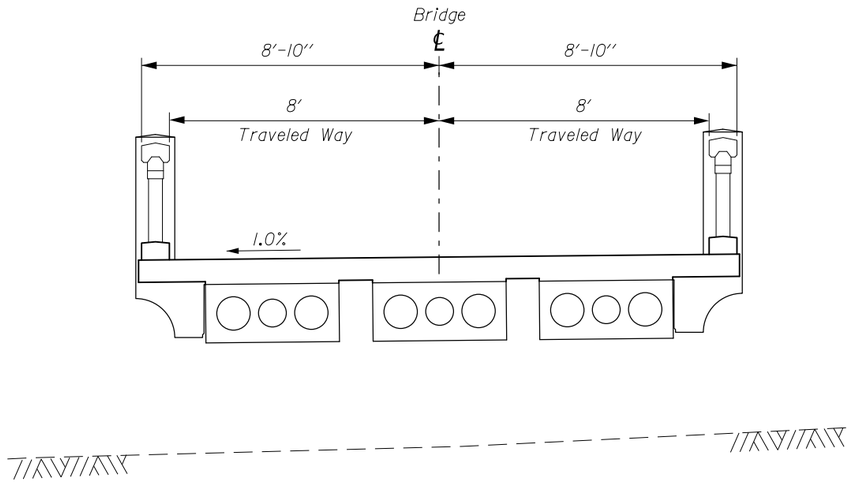

TYPICAL TRAIL SECTION

177+51 to 178+30 (See Bridge Drawings)

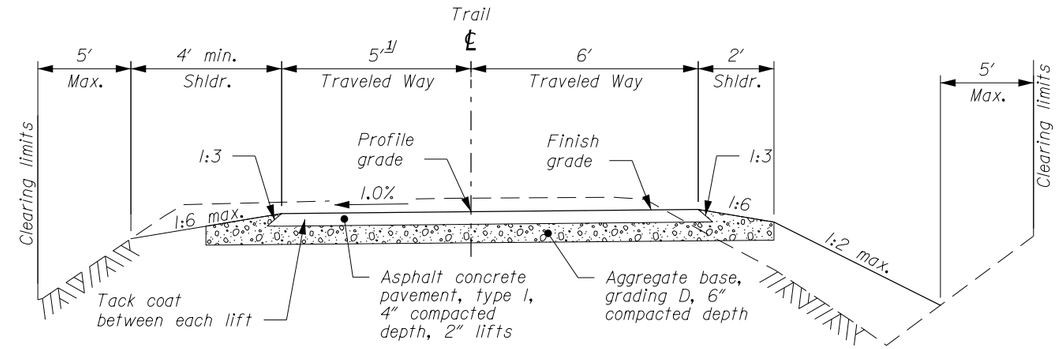

TYPICAL TRAIL SECTION

172+35 to 173+10

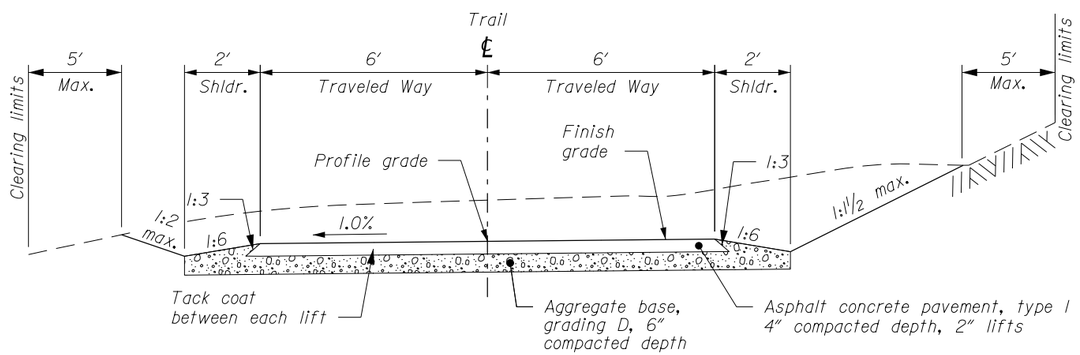

TYPICAL TRAIL SECTION

183+80 to 183+90
183+90 to 184+15 2/
184+15 to 184+60
185+20 to 186+50
187+00 to 188+80

FOOTNOTE:

1/ Transition left edge from 172+35, 6′ left to 172+40, 5′ left.

2/ See sheet 1.2 for trailside rest area details.

NO SCALE

TYPICAL SECTIONS

02/2015 S. Daleo Checked by: 02/2015 C. Clausen Designed by: 11-Feb-2015 04:18 PM ...\of16314cc.dgn [Int_ft2D]

STATE	PROJECT	SHEET NUMBER
OR	PFH 163(19)	C.4

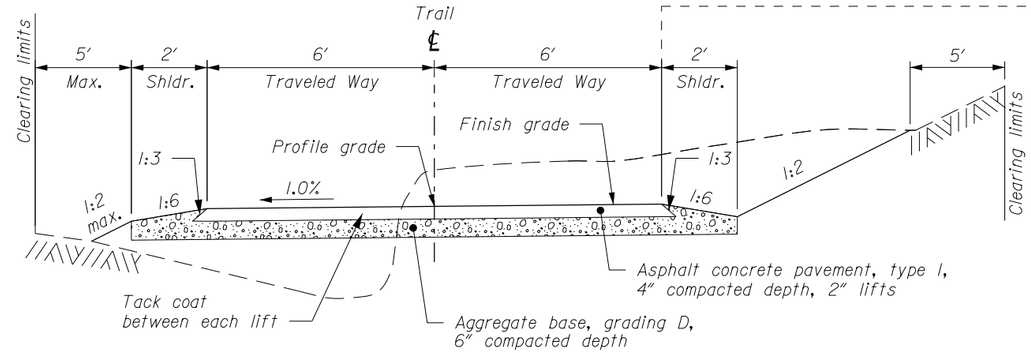

TYPICAL TRAIL SECTION

186+50 to 187+00

188+80 to 189+70

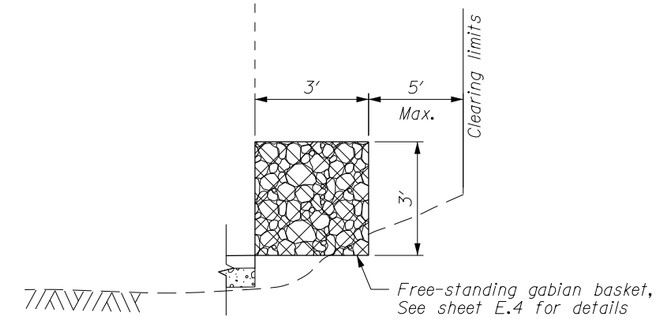

189+25 to 189+70

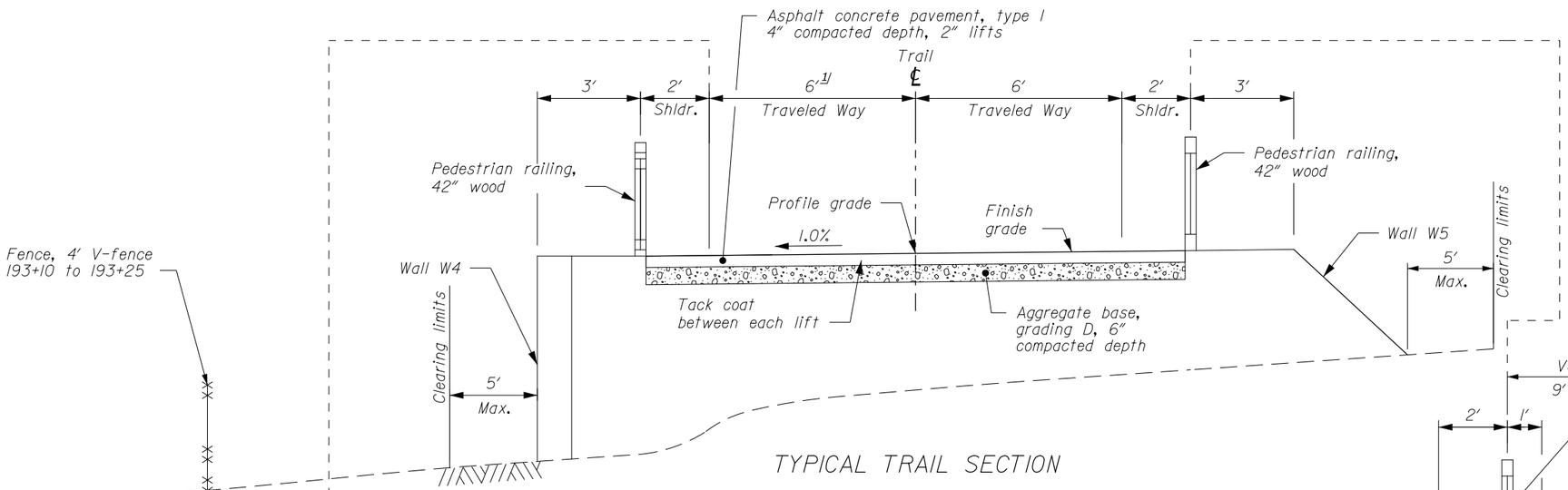

TYPICAL TRAIL SECTION

190+75 to 193+25

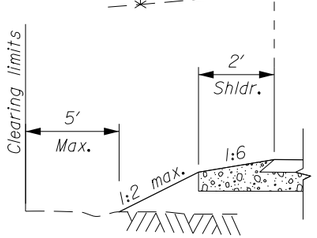

190+75 to 191+40

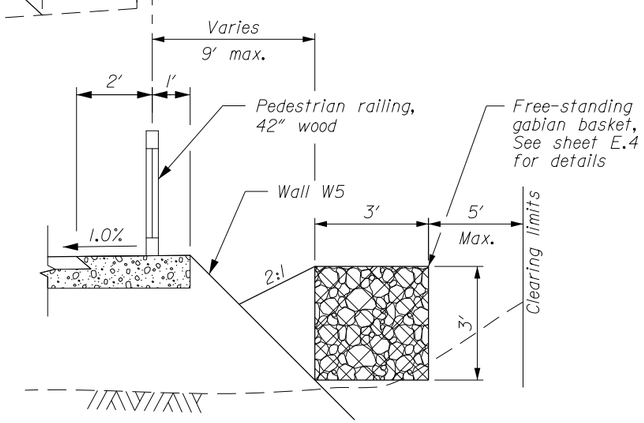

190+75 to 191+00

FOOTNOTE:

1/ Transition left edge from 191+30, 6′ left to 191+40, 8′ left. Width varies from 8′ to 11′ from 191+59 to 192+57.

TYPICAL SECTIONS

...\of16314cd.dgn [Int_ft2D] | 12-Feb-2015 10:12 AM | Designed by: C. Clausen 02/2015 | Checked by: S. Daleo 02/2015

STATE	PROJECT	SHEET NUMBER
OR	PFH 163(19)	C.5

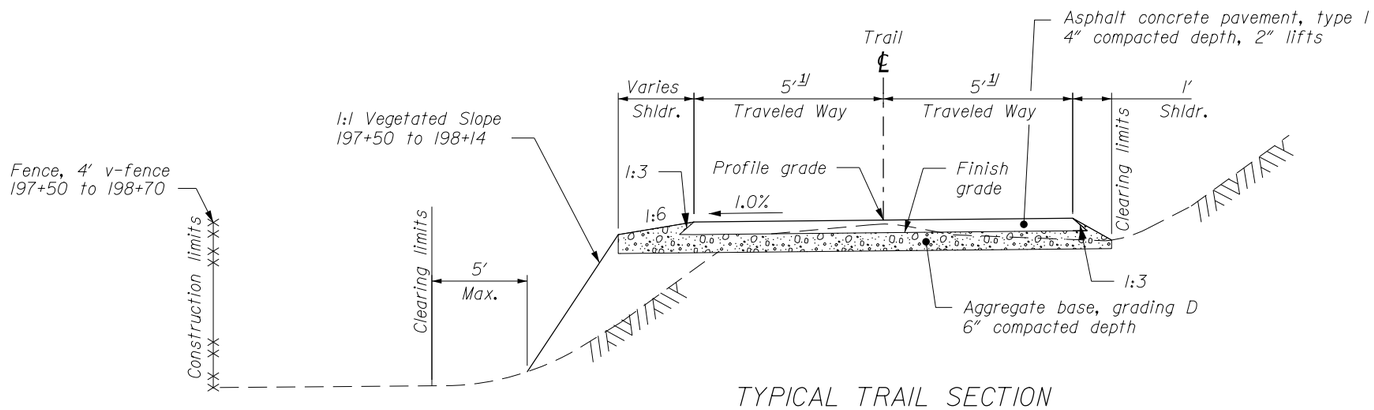

TYPICAL TRAIL SECTION

197+40 to 198+70

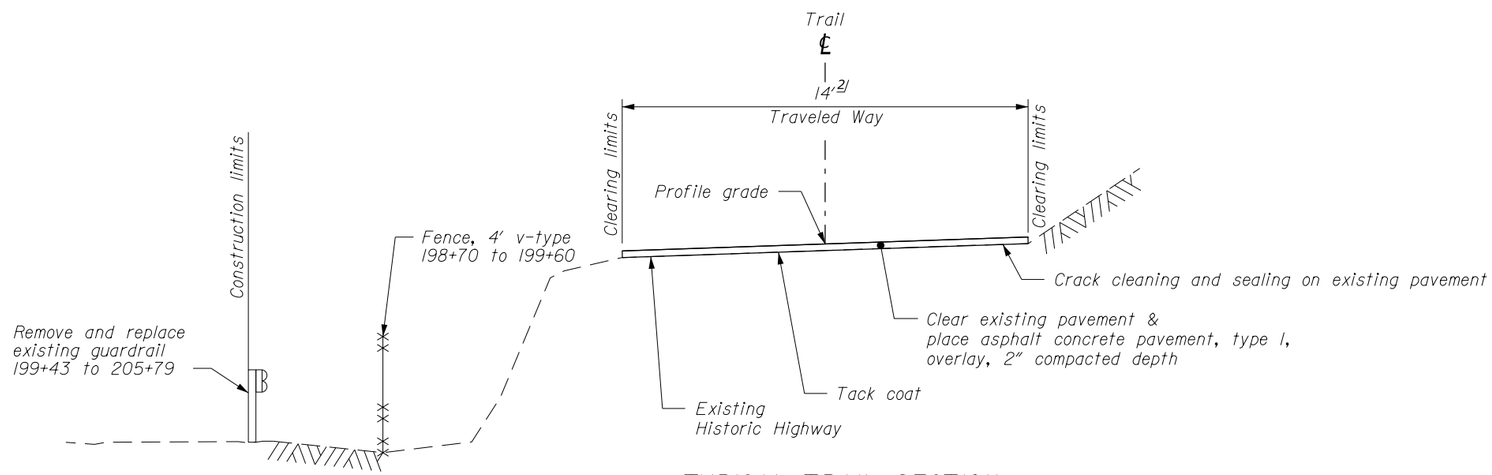

TYPICAL TRAIL SECTION

198+70 to 205+79

FOOTNOTE:

1/ Transition from 197+40, 6′ left and right to 197+50, 5′ left and right. Transition from 198+70, 6′ left and right.

2/ Clear 18′ width from 201+80 to 202+00.

NO SCALE

TYPICAL SECTIONS

02/2015 | S. Daleo | 02/2015 | C. Clausen | 11-Feb-2015 04:18 PM | Designed by: | Checked by: | ...\bf16314ce.dgn [Int_ft2D]

STATE	PROJECT	SHEET NUMBER
OR	PFH 163(19)	C.6

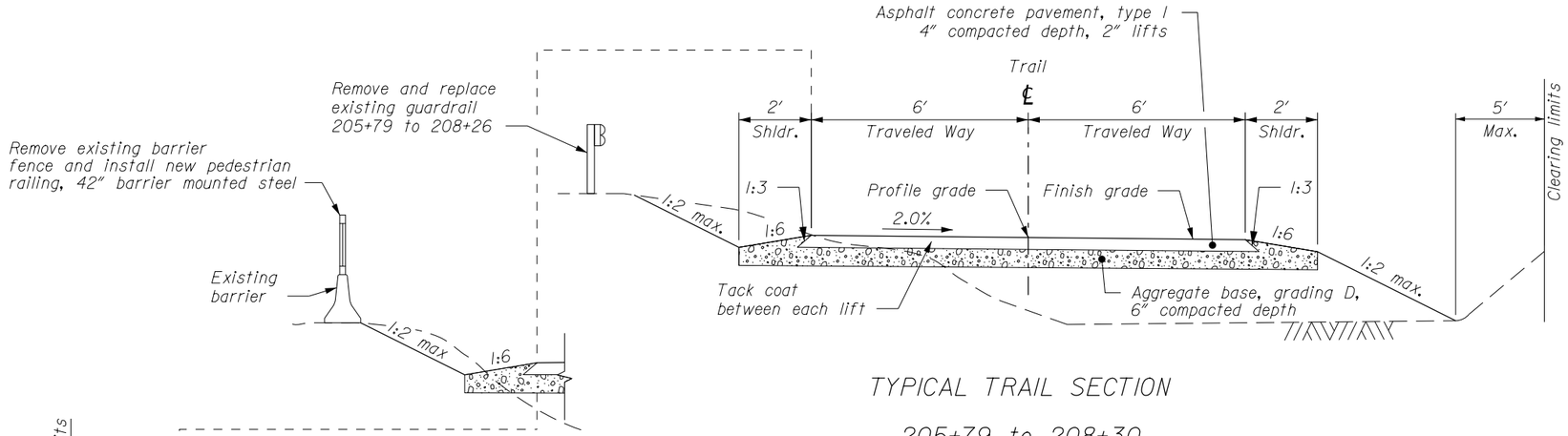

TYPICAL TRAIL SECTION

205+79 to 208+30

208+28 to 208+50

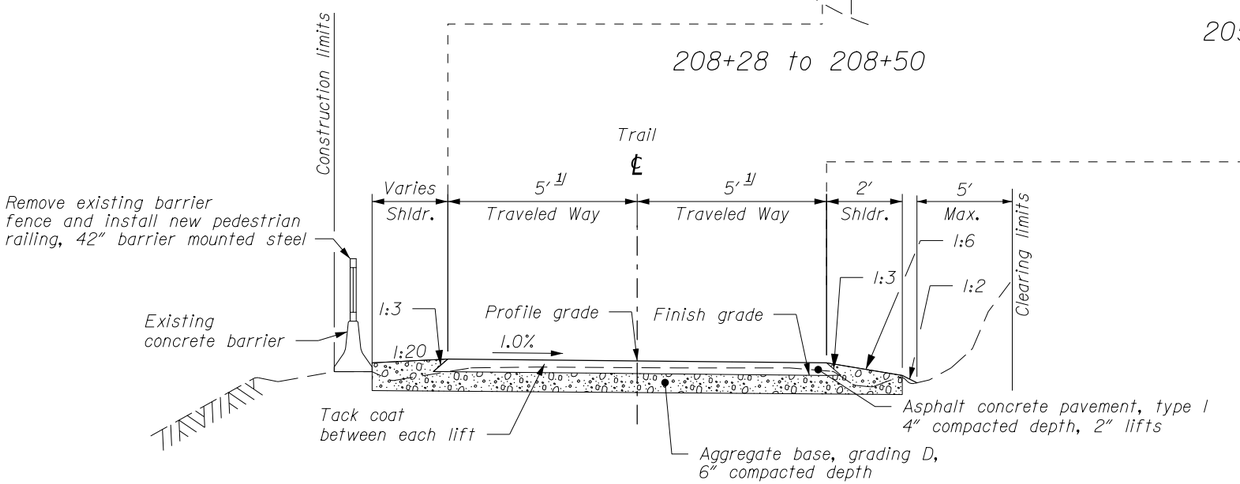

TYPICAL TRAIL SECTION

208+30 to 216+37

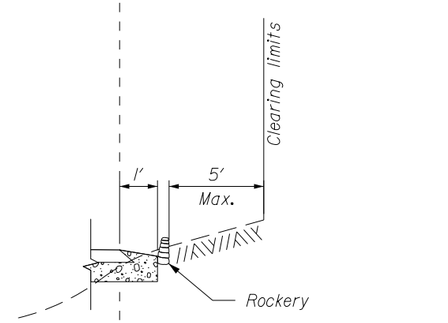

212+60 to 215+30

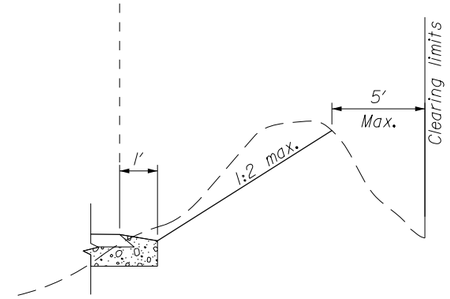

215+30 to 216+37

FOOTNOTE:

1/ Transition from 208+30, 6' left and 6' right to 208+40, 5' left and 5' right.

NO SCALE

TYPICAL SECTIONS

02/2015 | S. Daleo | Checked by: | 02/2015 | C. Clausen | Designed by: | 12-Feb-2015 10:15 AM | ...\of16314cf.dgn [Int_ft2D]

STATE	PROJECT	SHEET NUMBER
OR	PFH 163(19)	C.7

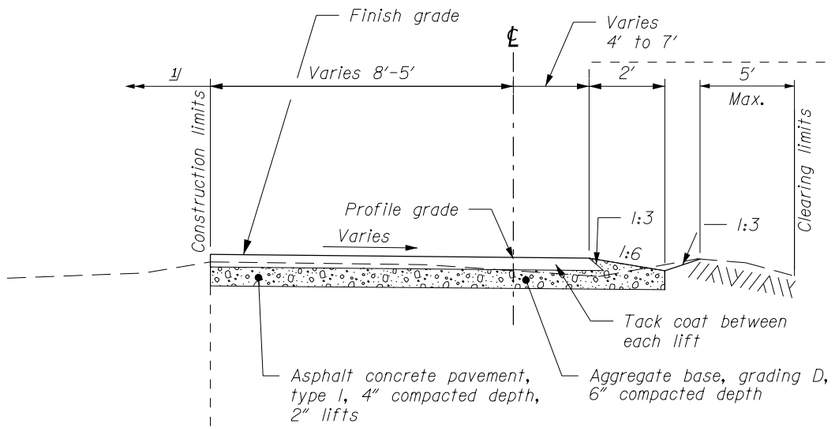

TYPICAL TRAIL SECTION

216+37 to 217+25 1/

217+83 to 218+38

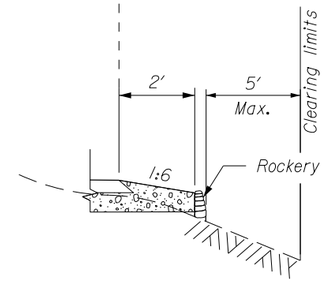

218+05 to 218+30

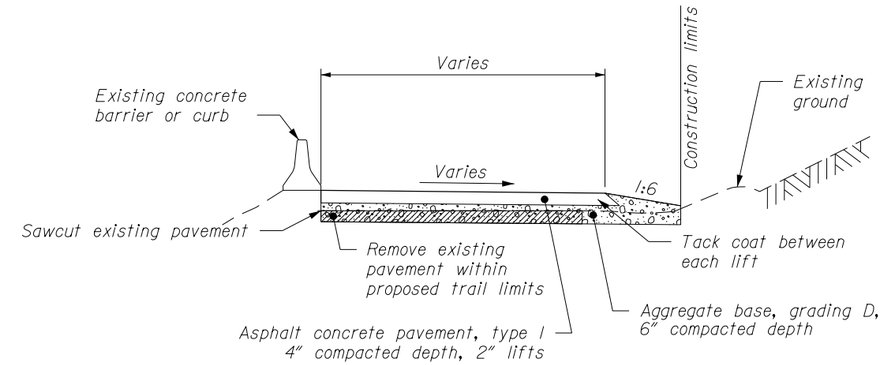

TYPICAL PAVEMENT REMOVAL SECTION

209+61 to 218+38

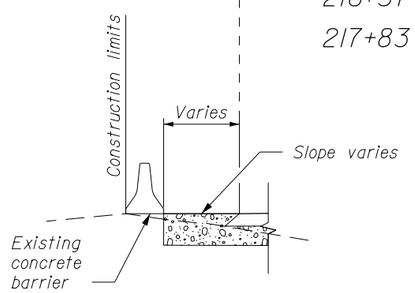

216+37 to 216+50

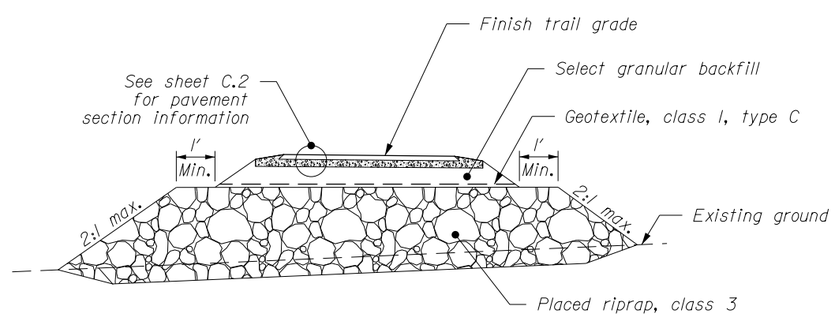

TYPICAL TRAIL SECTION
FLOW THROUGH EMBANKMENT

175+40 to 177+40

FOOTNOTE:

1/ See Landscape sheet 1.7 for Starvation Trailhead, 217+25 to 217+83.

NO SCALE

TYPICAL SECTIONS

02/2015 | S. Daleo | 02/2015 | C. Clausen | 12-Feb-2015 10:18 AM | Checked by: | Designed by: | ...\of16314cg.dgn [Int_ft2D]

STATE	PROJECT	SHEET NUMBER
OR	PFH 163(19)	D.1

PLAN QUANTITIES			
ITEM	DESCRIPTION	UINT	TOTAL
20101-0000	Clearing and Grubbing	ACRE	8
25302-1000	Gabions, Galvanized or Aluminum Coated	CUYD	60
56302-1000	Painting Concrete Structure	SQFT	2035
61904-0000	Bollard Post	EACH	3
62102-000	Trail Medallion	EACH	2
63640-0700	Relocate Electrical Line	LPSM	1

PEDESTRIAN RAIL QUANTITIES				
LOCATION	Item 64604-3000 Fixture, Pedestrian Railing, 22" Barrier Mounted Steel (Feet)	Item 64604-3000 Fixture, Pedestrian Railing, 42" Wall Mounted Steel (Feet)	Item 64604-3000 Fixture, Pedestrian Railing, 42" Wood (Feet)	Item 64604-3000 Fixture, Pedestrian Railing, 42" Barrier Mounted Steel (Feet)
151+23 to 169+75 Lt.	1852			
151+88 to 152+80 Rt.		92		
189+60 to 193+30 Lt.			376	
190+75 to 193+25 Rt.			241	
208+25 to 216+37 Lt.				815
TOTALS	1852	92	617	815

FENCE QUANTITIES				
LOCATION	Item 20302-0700 Removal of Fence (Feet)	Item 20302-700 Removal of Fence on Barrier (Feet)	Item 61901-0000 Fence, 4' V-Type (Feet)	Item 61920-2000 Remove and Reset Gate (Each)
169+95 Rt. To 170+36 Lt.	54			
169+76 to 170+36 Lt.			67	
170+42 Lt.				1
193+16 to 199+61 Lt.			648	
208+27 to 216+38 Lt.		815		
TOTALS	54	815	715	1

ROADSIDE BARRIER QUANTITIES				
LOCATION	Item 20302-1200 Removal of Guardrail (Feet)	Item 20302-1300 Removal of Concrete Barrier (Feet)	Item 61701-1250 Guardrail System, Type 2, Class A, Wood Posts (Feet)	Item 61801-0000 Concrete Barrier (Feet)
151+18 to 152+65	147			
199+43 to 207+18 Lt.	775			
197+28 to 198+16		88		
199+43 to 208+28 Lt.			885	
149+49 to 169+75 Lt.				2026
TOTALS	922	88	885	2026

TABULATION OF TRAIL QUANTITIES

02/2015 S. Daleo Checked by: 02/2015 C. Clausen Designed by: 11-Feb-2015 04:04 PM ...\of16314fa.dgn [Int_ft2D]

STATE	PROJECT	SHEET NUMBER
OR	PFH 163(19)	D.2

CURVE DATA TABLE				
CURVE #	Δ	T	L	R
1	12°23'19"	32.56'	64.87'	300'
2	8°57'42"	195.91'	391.02'	2500'
3	17°11'57"	21.17'	42.03'	140'
4	25°30'55"	31.70'	62.35'	140'
5	6°13'15"	76.08'	152.00'	1400'
6	5°18'47"	139.19'	273.18'	3000'
7	50°30'01"	75.46'	141.02'	160'
8	19°16'24"	33.96'	67.28'	200'
9	34°48'19"	73.66'	142.75'	235'
10	16°59'05"	35.09'	69.66'	235'
11	7°44'01"	12.84'	25.65'	190'
12	23°26'19"	24.89'	49.09'	120'
13	19°44'38"	38.28'	75.81'	220'
14	23°23'41"	54.87'	108.20'	265'
15	35°32'08"	96.13'	186.06'	300'
16	17°04'09"	45.02'	89.37'	300'
17	23°40'42"	64.98'	128.11'	310'
18	42°33'52"	64.27'	122.58'	165'
19	64°45'05"	73.55'	131.09'	116'
20	31°14'20"	59.83'	116.68'	214'
21	55°55'40"	95.56'	175.70'	180'
22	73°00'42"	92.52'	159.29'	125'
23	11°12'16"	49.04'	97.78'	500'
24	1°24'44"	12.32'	24.65'	1000'
25	7°21'57"	70.80'	141.41'	1100'
26	4°54'23"	17.14'	34.25'	400'
27	3°39'18"	15.95'	31.90'	500'
28	13°06'53"	91.96'	182.72'	800'
29	10°17'10"	63.00'	125.67'	700'
30	8°04'47"	71.33'	142.43'	1010'
31	6°15'19"	43.71'	87.34'	800'
32	5°17'25"	34.64'	69.25'	750'
33	19°31'18"	103.22'	204.43'	600'
34	5°59'54"	52.39'	104.69'	1000'
35	72°34'54"	41.12'	70.94'	56'
36	58°01'25"	27.73	50.64'	50'

CURVE DATA TABLE

...\of16314fb.dgn [Int_ft2D] 12-Feb-2015 10:43 AM Designed by: C. Clausen 02/2015 Checked by: S. Daleo 02/2015

STATE	PROJECT	SHEET NUMBER
OR	PFH 163(19)	D.3

PRELIMINARY
NOT FOR CONSTRUCTION

CONTROL POINTS

NAME	NORTHING	EASTING	ELEVATION	DESCRIPTION
12201	739080.056	7891823.498	103.22	5/8" IR w/ FHWA Alum. Cap

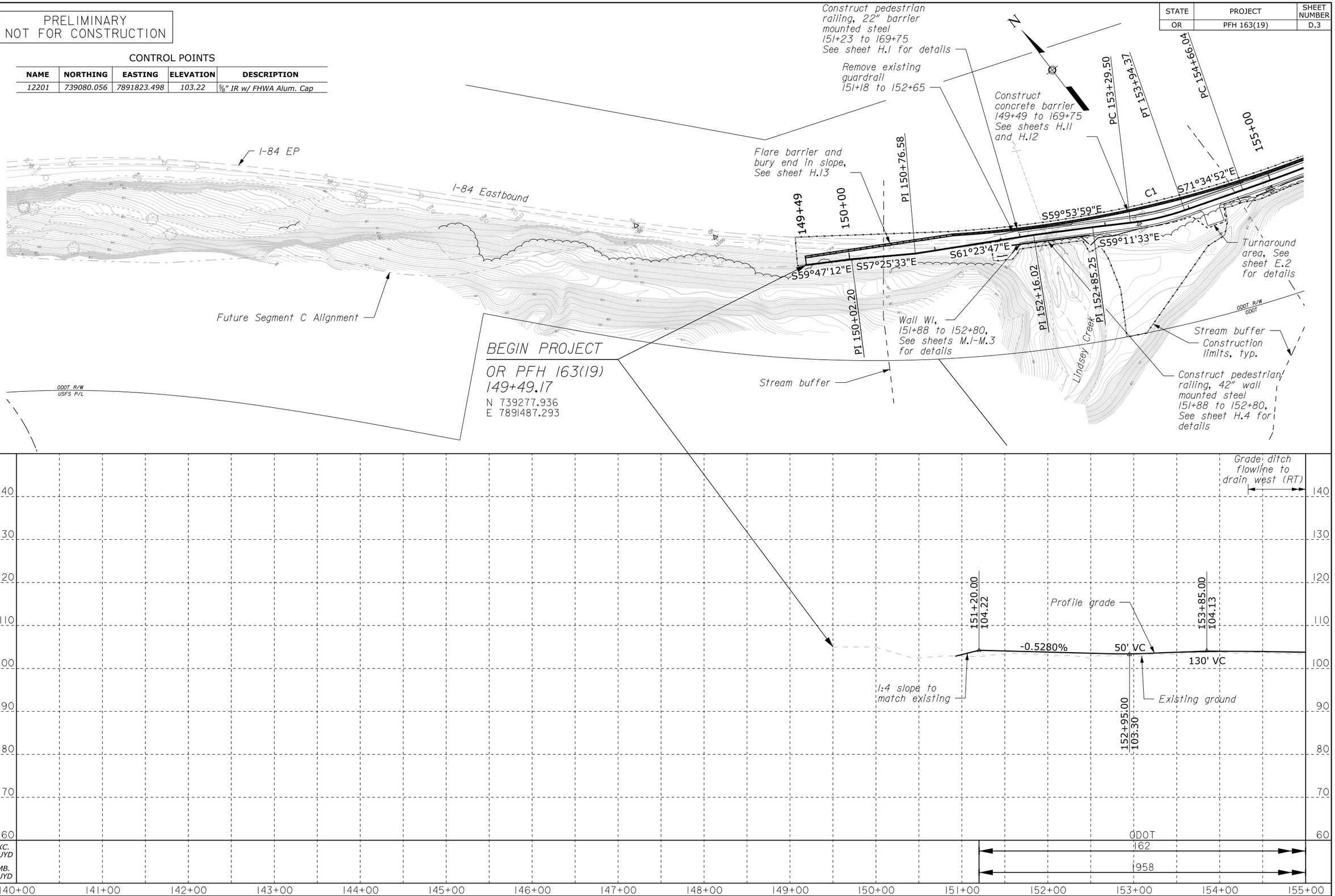

02/2015 S. Daleo Checked by: 02/2015 C. Clausen Designed by: 11-Feb-2015 04:05 PM ...\of16314fc.dgn [Int_ft2D]

STATE	PROJECT	SHEET NUMBER
OR	PFH 163(19)	D.4

PRELIMINARY
NOT FOR CONSTRUCTION

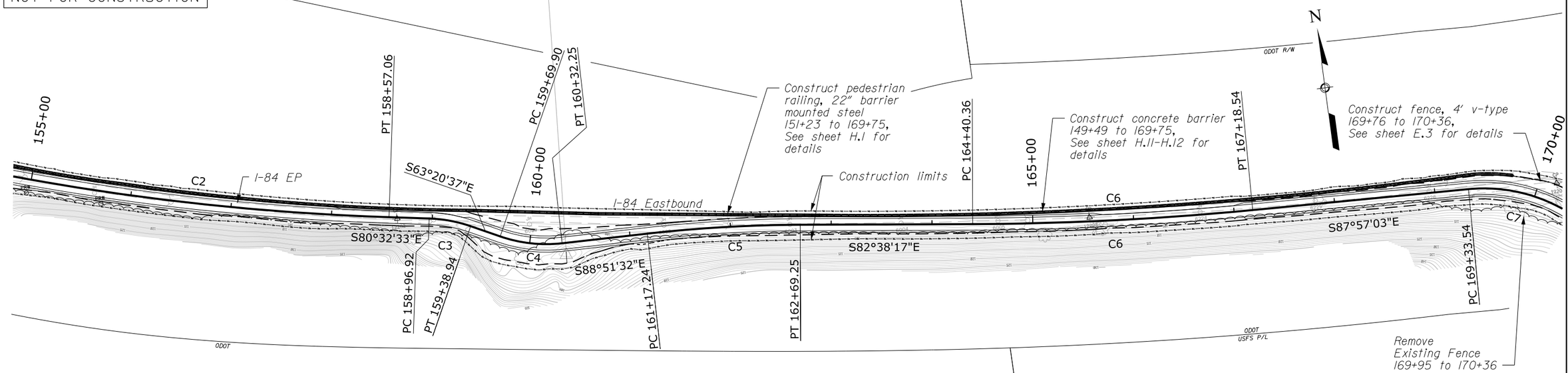

CONTROL POINTS

NAME	NORTHING	EASTING	ELEVATION	DESCRIPTION
12202	738940.848	7892329.986	101.86	5/8" IR w/ FHWA Alum. Cap
12203	738851.531	7893010.851	103.32	5/8" IR w/ FHWA Alum. Cap

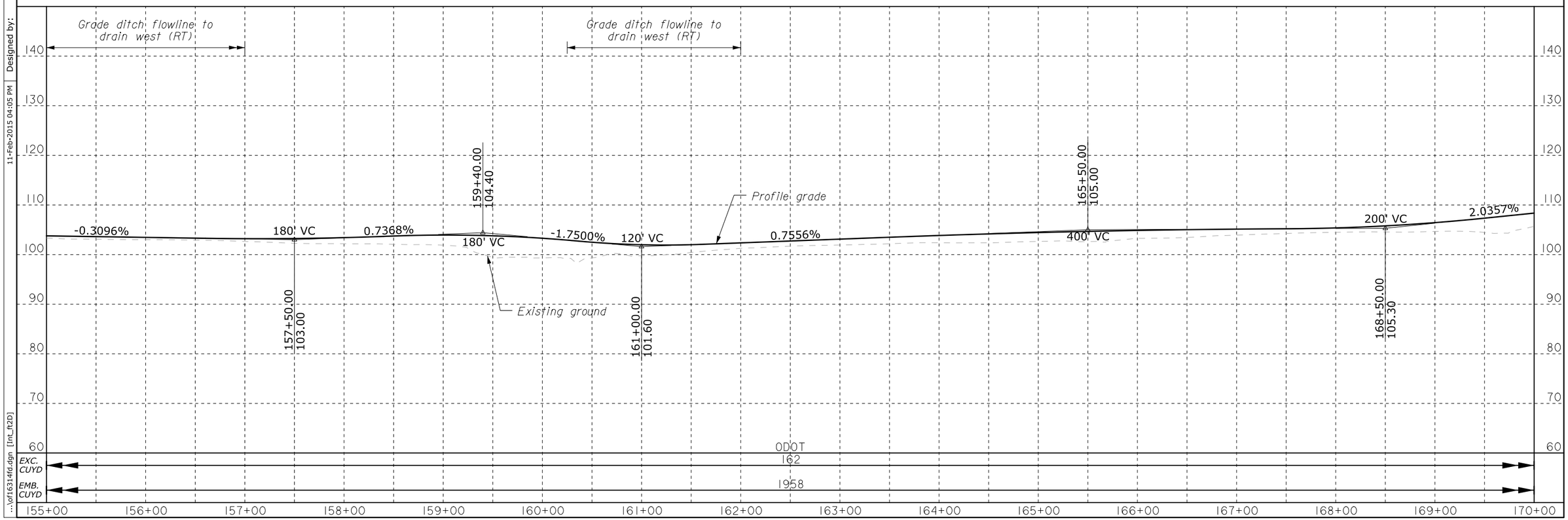

02/2015 S. Daleo
02/2015 Checked by: C. Clausen
Designed by:
11-Feb-2015 04:05 PM
...\of1631dfd.dgn [Int_ft2D]

STATE	PROJECT	SHEET NUMBER
OR	PFH 163(19)	D.5

PRELIMINARY
NOT FOR CONSTRUCTION

CONTROL POINTS

NAME	NORTHING	EASTING	ELEVATION	DESCRIPTION
12204	738824.142	7893474.682	104.78	5/8" IR w/ FHWA Alum. Cap
12205	738694.250	7893561.479	108.54	5/8" IR w/ FHWA Alum. Cap
12206	738575.921	7893715.995	103.19	5/8" IR w/ FHWA Alum. Cap
12207	738550.480	7893881.839	100.57	5/8" IR w/ FHWA Alum. Cap
12208	738495.768	7894114.503	99.317	5/8" IR w/ FHWA Alum. Cap
12209	738498.541	7894327.240	107.24	5/8" IR w/ FHWA Alum. Cap
12210	738587.693	7894440.024	115.26	5/8" IR w/ FHWA Alum. Cap
12211	738648.298	7894570.307	122.91	5/8" IR w/ FHWA Alum. Cap
12212	738707.371	7894782.867	140.22	5/8" IR w/ FHWA Alum. Cap

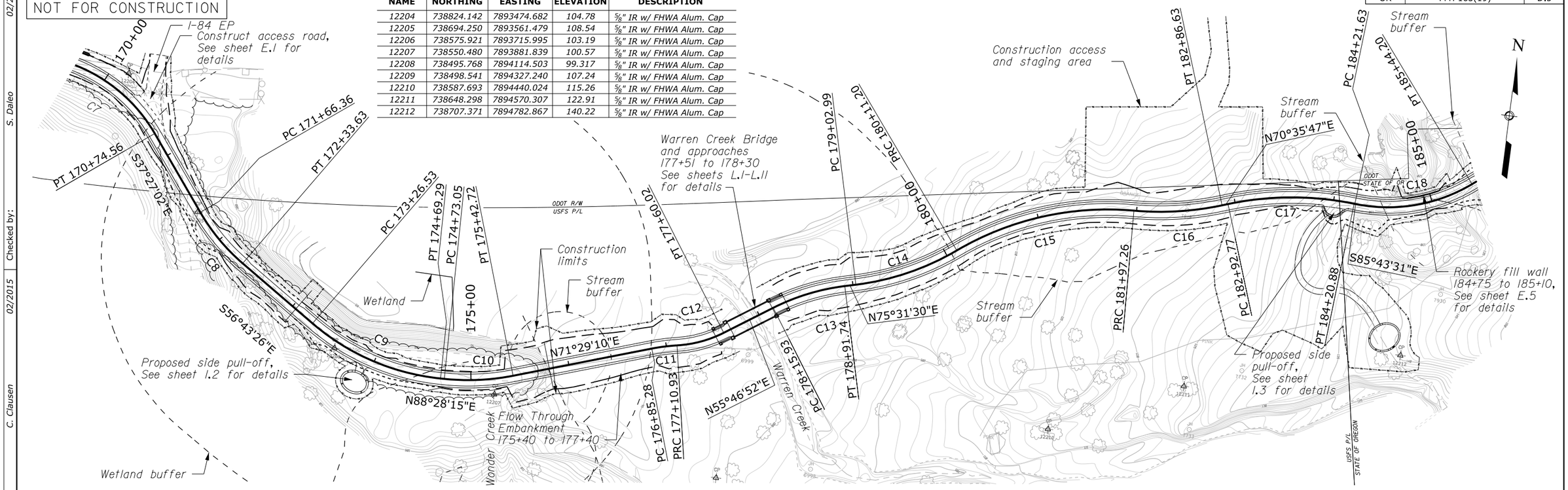

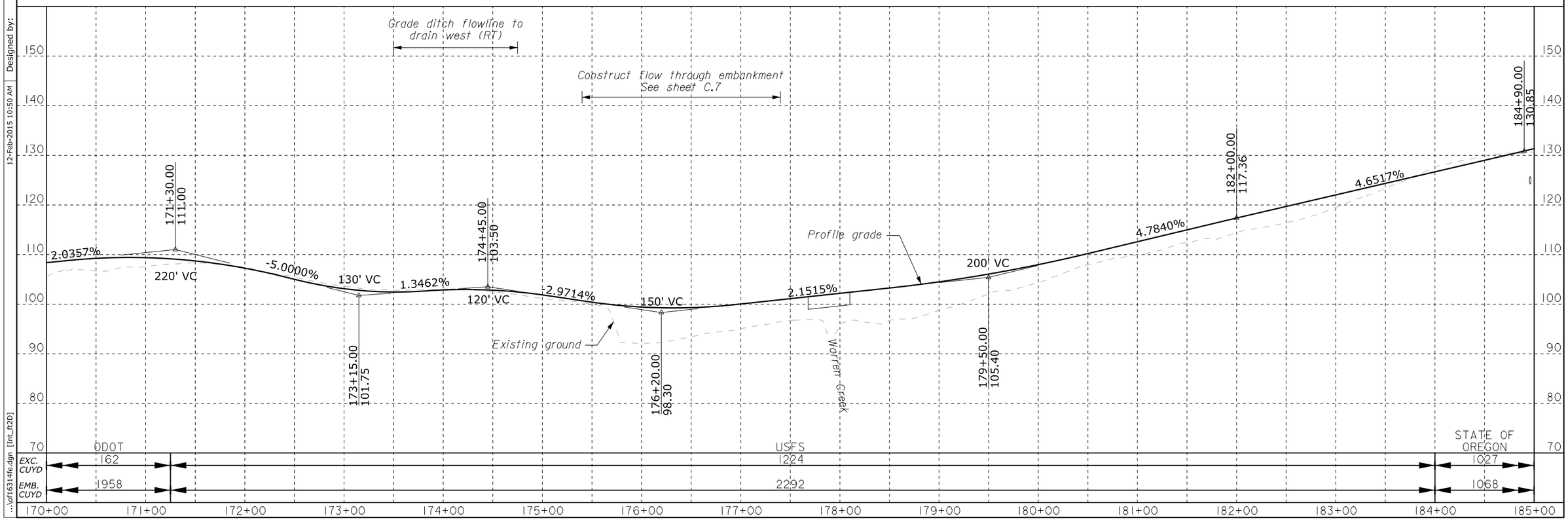

02/2015 S. Daleo Checked by: 02/2015 C. Clausen Designed by: 12-Feb-2015 10:50 AM ...\of1631fe.dgn [Int_ft2D]

STATE	PROJECT	SHEET NUMBER
OR	PFH 163(19)	D.6

CONTROL POINTS

NAME	NORTHING	EASTING	ELEVATION	DESCRIPTION
12213	738860.588	7894869.051	147.66	5/8" IR w/ FHWA Alum. Cap
12214	738919.477	7894937.768	143.53	5/8" IR w/ FHWA Alum. Cap
12215	738942.963	7895062.851	141.32	5/8" IR w/ FHWA Alum. Cap
12216	738916.860	7895225.543	126.36	5/8" IR w/ FHWA Alum. Cap
12217	738961.693	7895335.017	114.36	5/8" IR w/ FHWA Alum. Cap
12218	739066.017	7895519.838	108.19	5/8" IR w/ FHWA Alum. Cap
12219	739052.210	7895877.397	112.15	5/8" IR w/ FHWA Alum. Cap

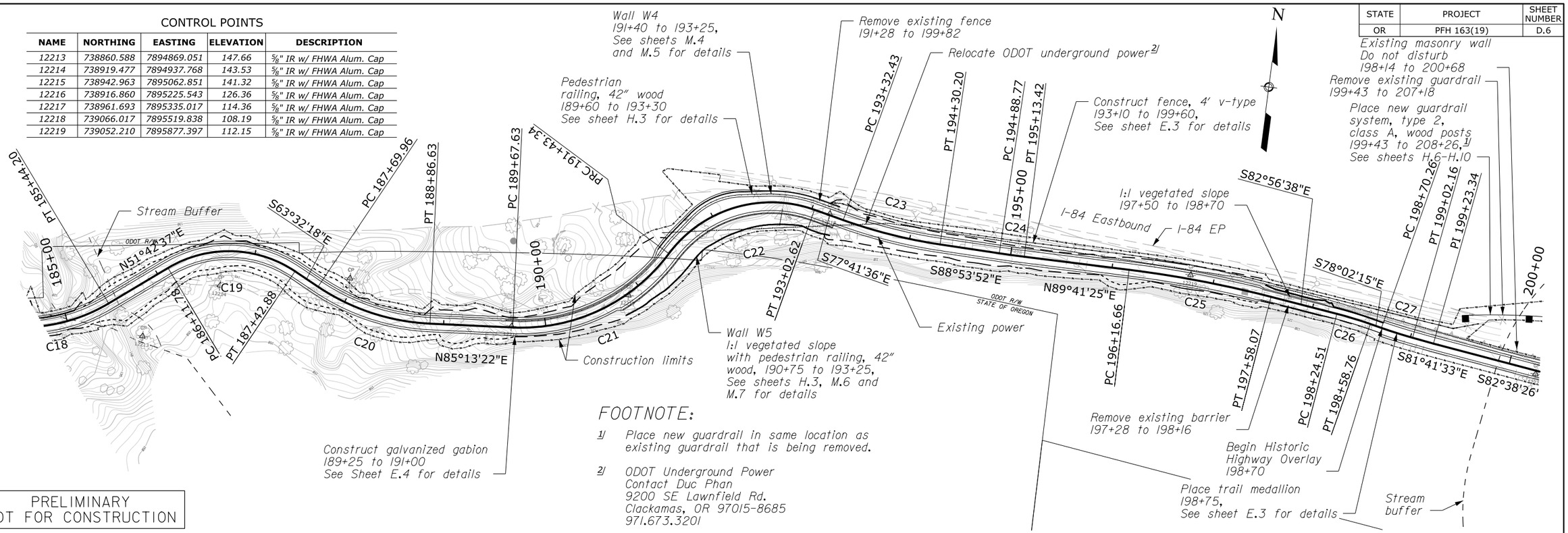

PRELIMINARY
NOT FOR CONSTRUCTION

FOOTNOTE:

1/ Place new guardrail in same location as existing guardrail that is being removed.

2/ ODOT Underground Power
Contact Duc Phan
9200 SE Lawnfield Rd.
Clackamas, OR 97015-8685
971.673.3201

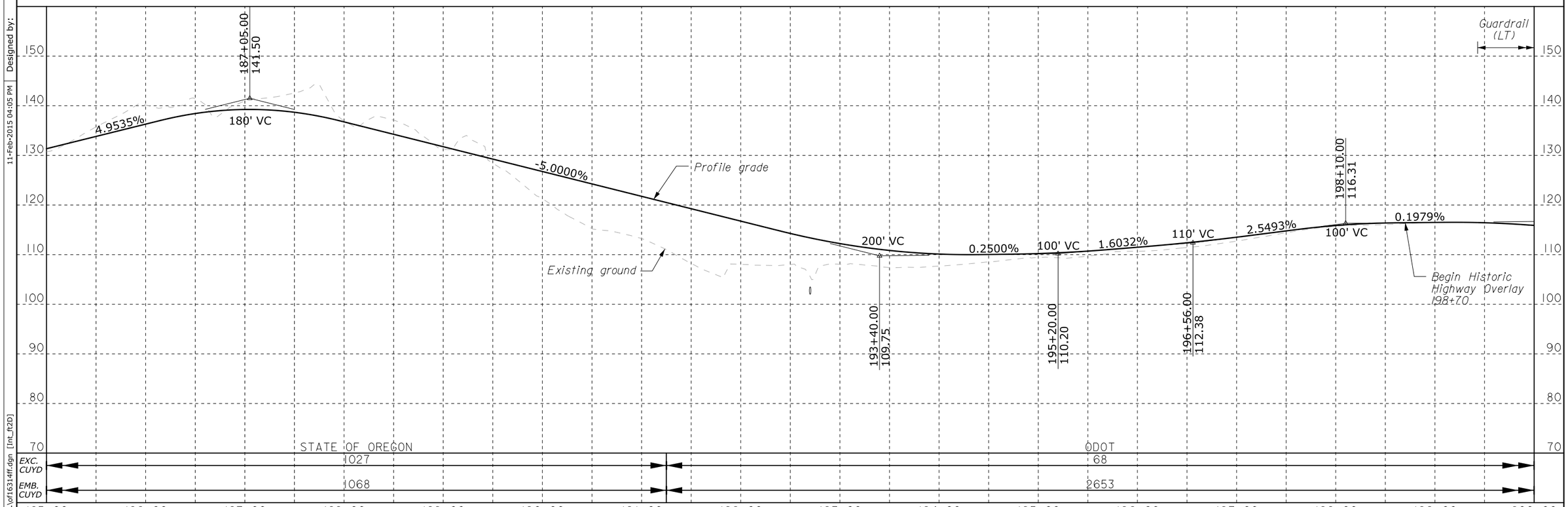

02/2015 S. Daleo Checked by: 02/2015 C. Clausen Designed by: 11-Feb-2015 04:05 PM ...\of16314dff.dgn [Int_ft2D]

STATE	PROJECT	SHEET NUMBER
OR	PFH 163(19)	D.7

PRELIMINARY
NOT FOR CONSTRUCTION

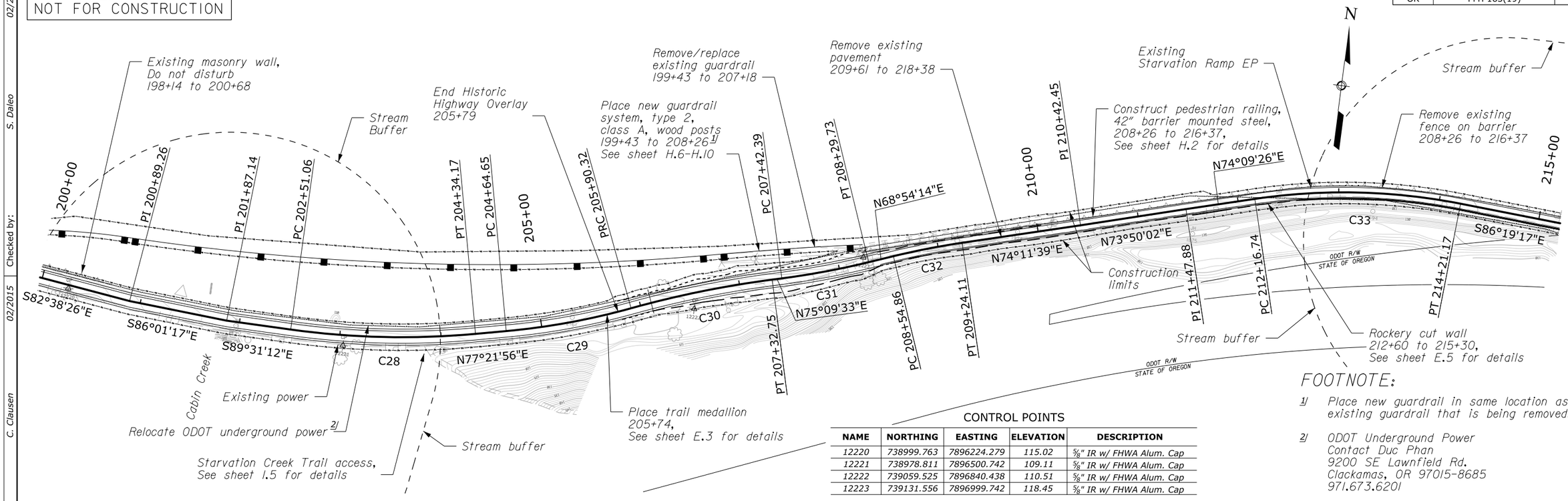

CONTROL POINTS

NAME	NORTHING	EASTING	ELEVATION	DESCRIPTION
12220	738999.763	7896224.279	115.02	5/8" IR w/ FHWA Alum. Cap
12221	738978.811	7896500.742	109.11	5/8" IR w/ FHWA Alum. Cap
12222	739059.525	7896840.438	110.51	5/8" IR w/ FHWA Alum. Cap
12223	739131.556	7896999.742	118.45	5/8" IR w/ FHWA Alum. Cap

FOOTNOTE:

1/ Place new guardrail in same location as existing guardrail that is being removed.

2/ ODOT Underground Power
Contact Duc Phan
9200 SE Lawnfield Rd.
Clackamas, OR 97015-8685
971.673.6201

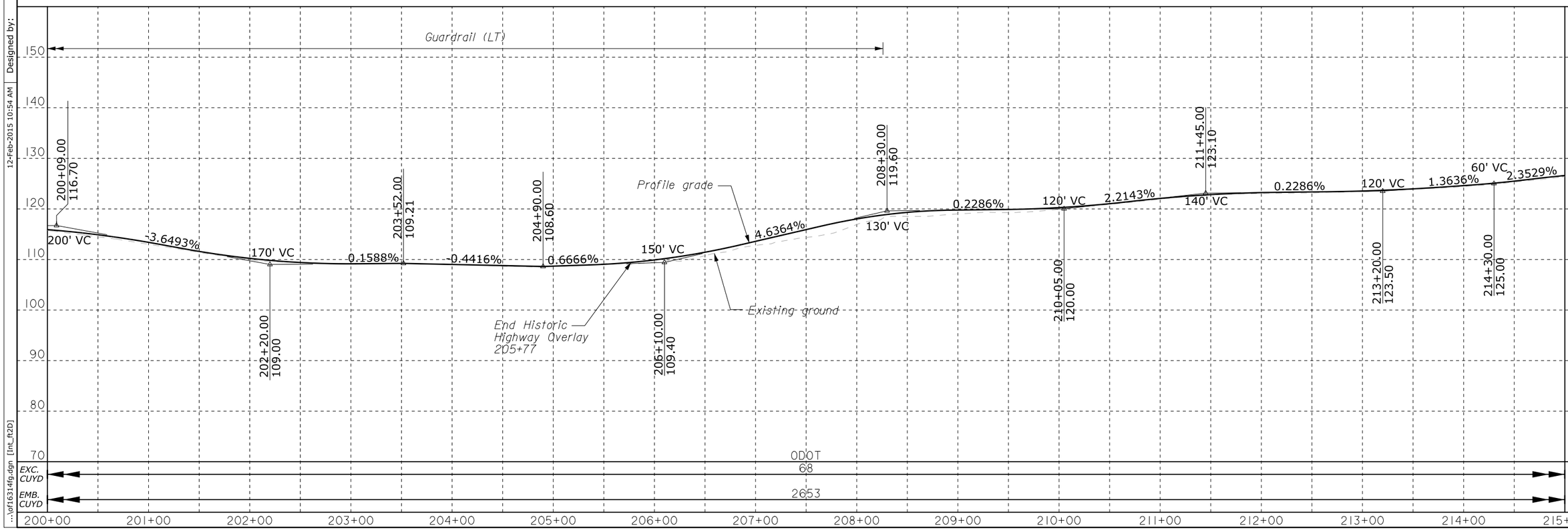

02/2015 S. Daleo Checked by: 02/2015 C. Clausen Designed by: 12-Feb-2015 10:54 AM ...\of16314fg.dgn [Int_ft2D]

STATE	PROJECT	SHEET NUMBER
OR	PFH 163(19)	D.8

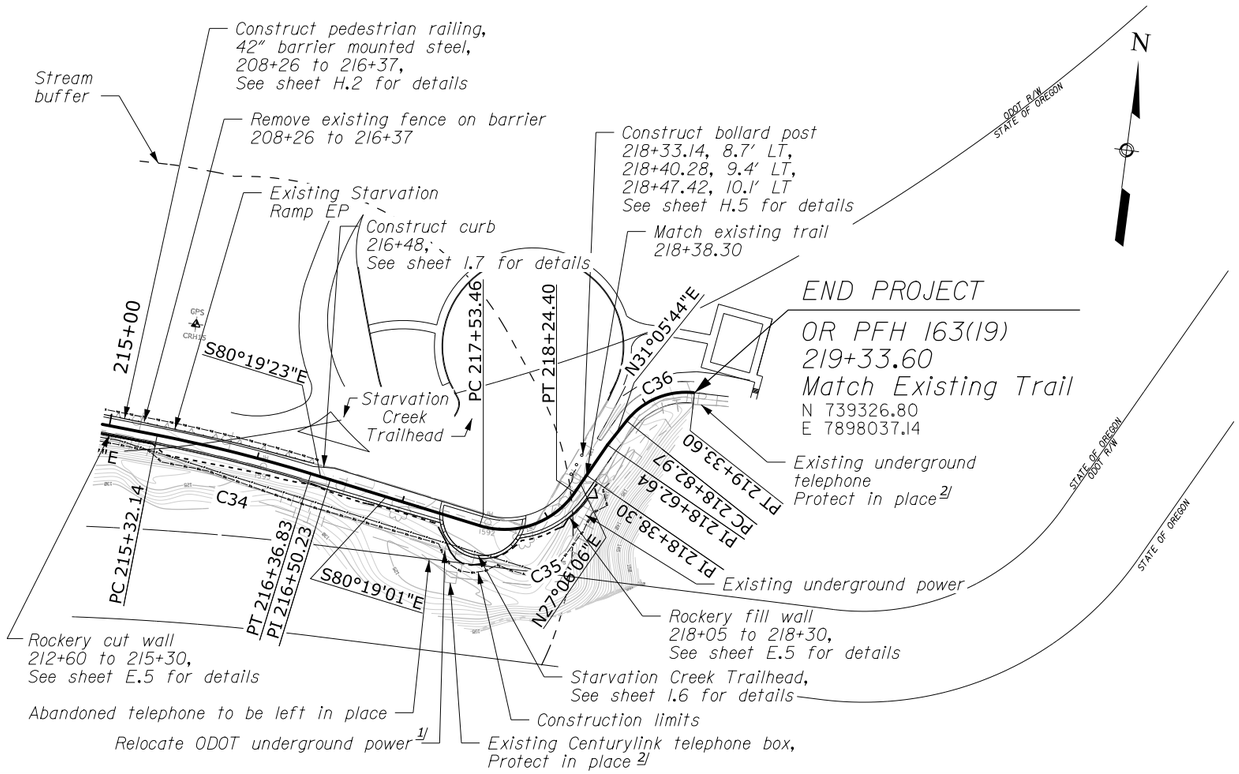

CONTROL POINTS

NAME	NORTHING	EASTING	ELEVATION	DESCRIPTION
CRH15	739329.153	7897704.904	124.76	ODOT GPS Control 3" Alum. Cap On 5/8" Alum. Roll

FOOTNOTE:

1/ ODOT Underground Power
Contact Duc Phan
9200 SE Lawnfield Rd.
Clackamas, OR 97015-8685
971.673.6201

2/ CenturyLink telephone box and copper cable
Contact Dyrk Pritchett
541.387.9255
or Tony Scherteleib
541.340.9702

PRELIMINARY
NOT FOR CONSTRUCTION

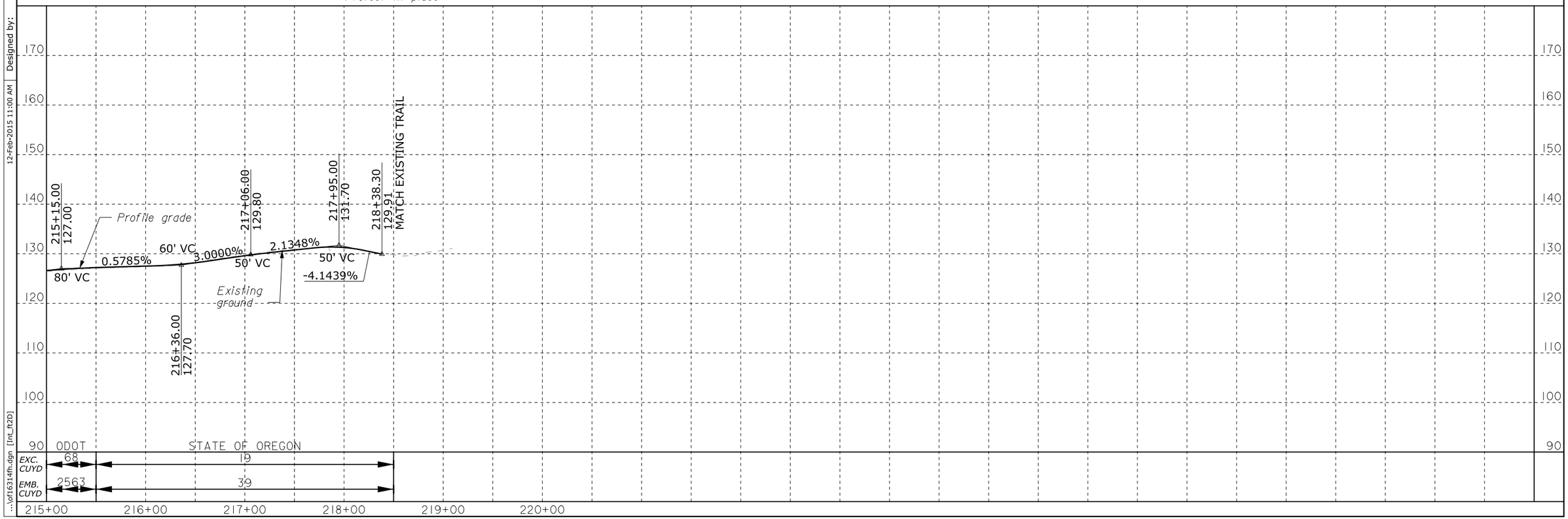

02/2015 S. Daleo Checked by: 02/2015 C. Clausen Designed by: 12-Feb-2015 11:00 AM ...\of16314fh.dgn [Int_ft2D]

STATE	PROJECT	SHEET NUMBER
OR	PFH 163(19)	E.1

CURVE DATA TABLE				
CURVE#	Δ	T	L	R
C38	57°17'45"	33.64'	64.89'	100'
C39	32°23'20"	8.71'	16.96'	30'

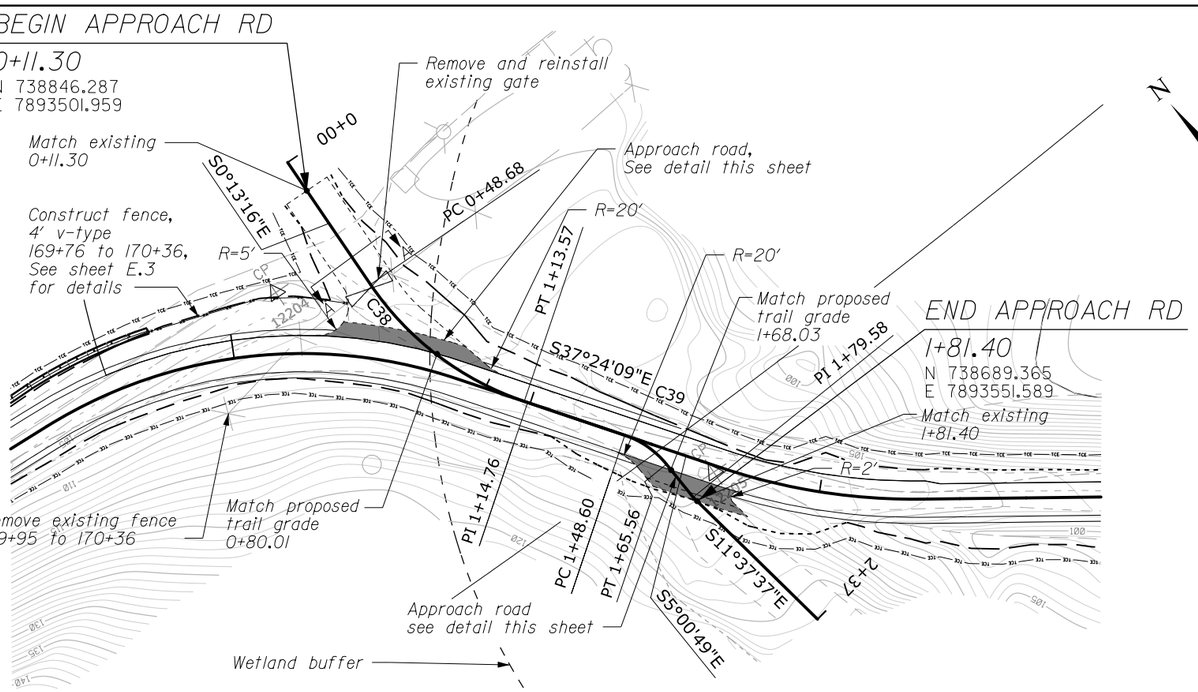

ACCESS ROAD AT 170+80
PLAN

PRELIMINARY
NOT FOR CONSTRUCTION

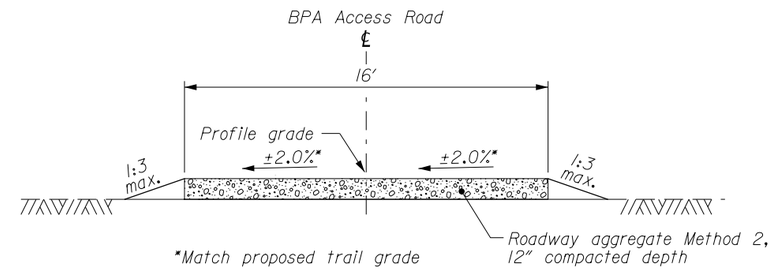

SECTION A-A

BPA ACCESS ROAD
0+11.30 to 0+69.11

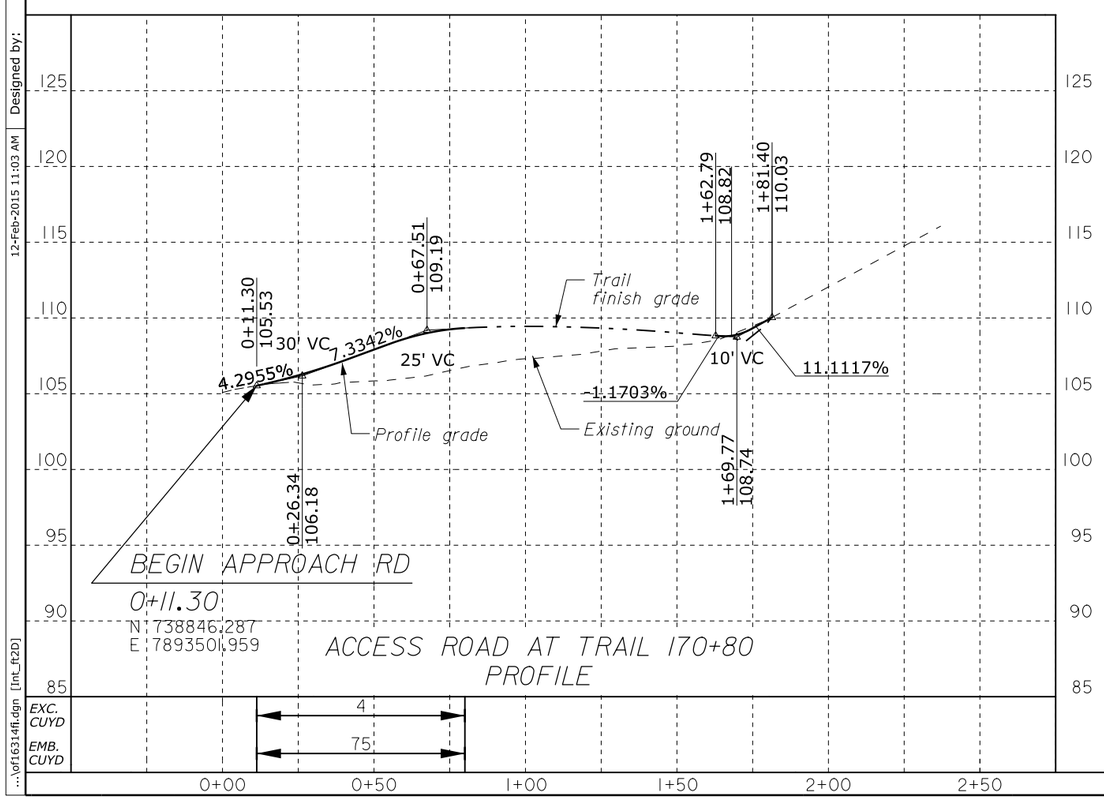

ACCESS ROAD AT TRAIL 170+80
PROFILE

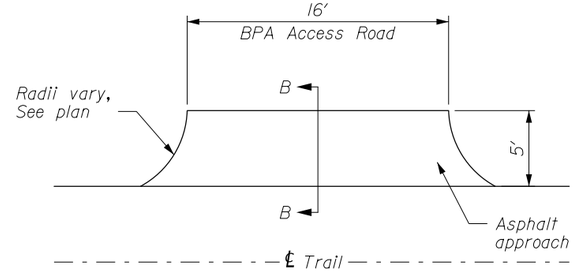

PLAN VIEW - ASPHALT APPROACH

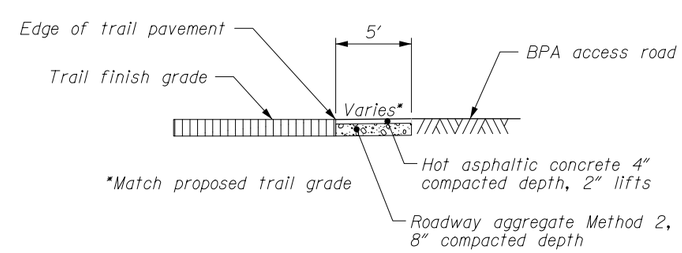

SECTION B-B

ACCESS ROAD AND APPROACH DETAILS

02/2015 S. Daleo Checked by: 02/2015 C. Clausen Designed by: 12-Feb-2015 11:03 AM ...\of16314fl.dgn [Int_ft2D]

STATE	PROJECT	SHEET NUMBER
OR	PFH 163(19)	E.2

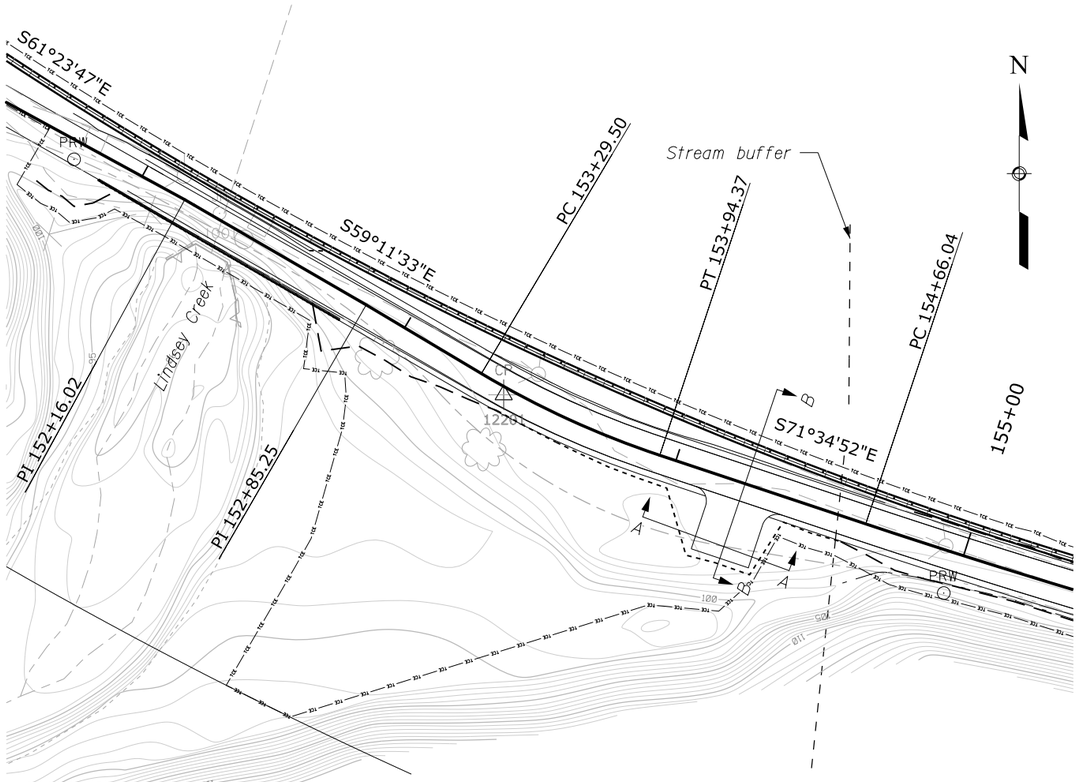

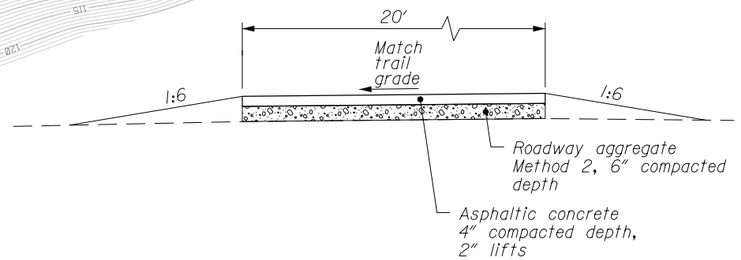

SECTION A-A

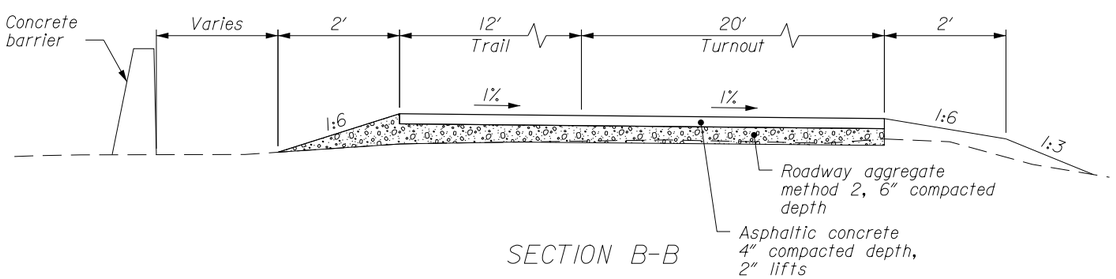

SECTION B-B

TURNOUT
154+24

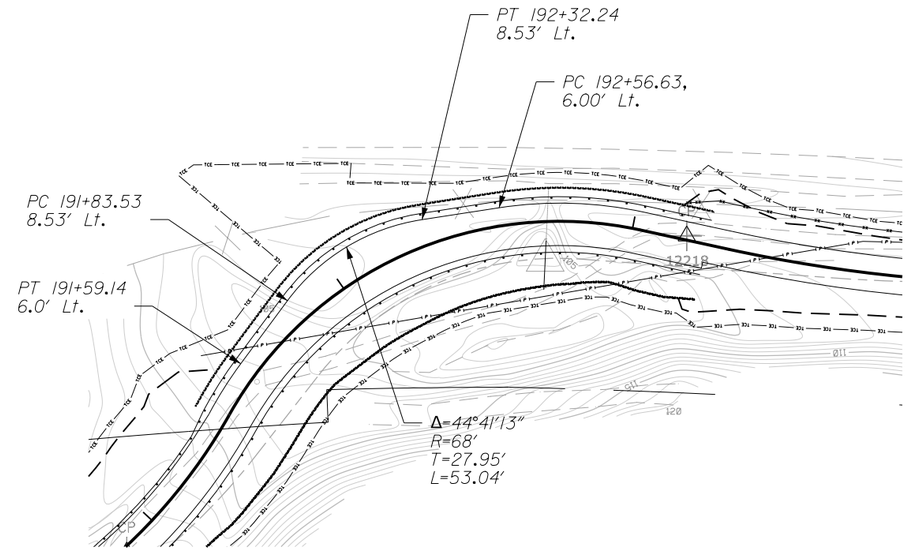

TURNOUT
192+08

TURNOUT DETAILS

02/2015 | S. Daleo | 02/2015 | C. Clausen | 11-Feb-2015 04:13 PM | Designed by: | Checked by: | ...\of16314fj.dgn [Int_ft2D]

STATE	PROJECT	SHEET NUMBER
OR	PFH 163(19)	E.3

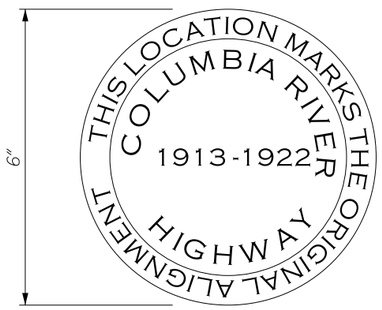

TYPE A

TYPE B

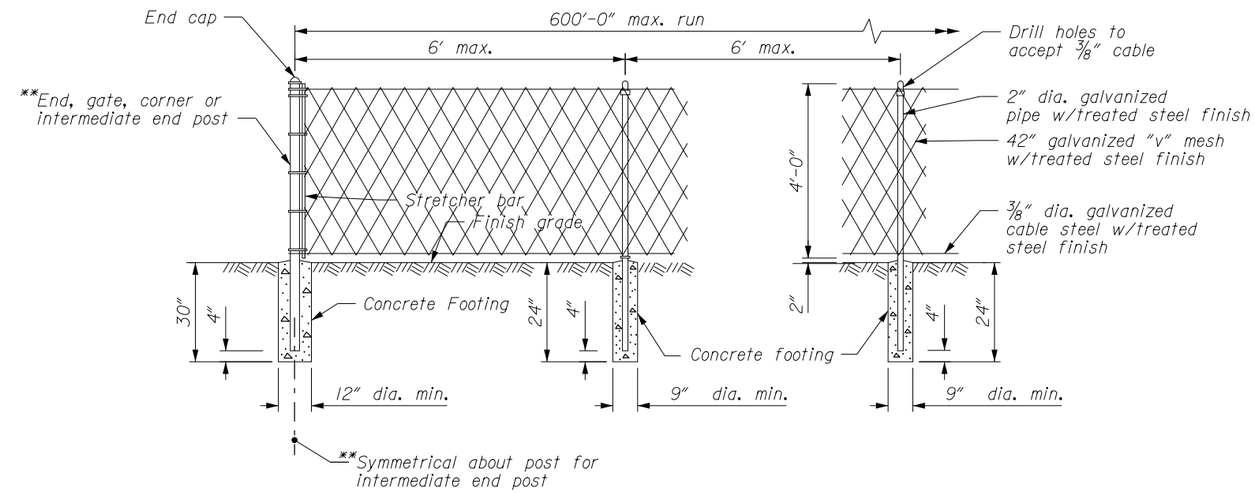

V-FENCE

4' V-TYPE FENCE TABLE				
Beginning	End	Lt./Rt.	Height	Length
169+76	170+36	Lt.	48"	67'
193+10	199+61	Lt.	48"	648'

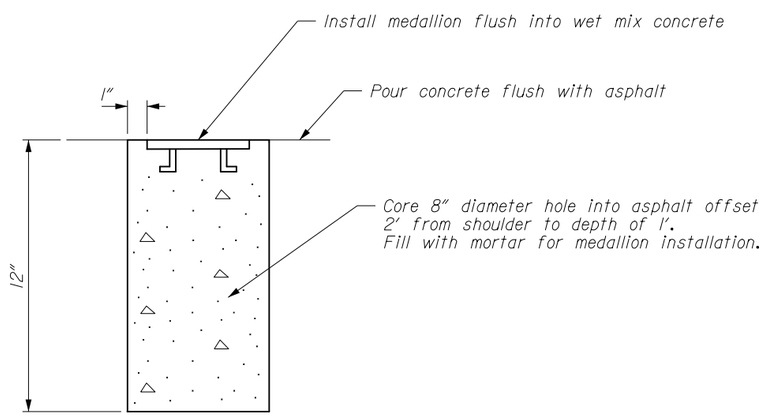

TRAIL MEDALLION MOUNTING

NOTE:
Medallion shall be supplied by others.

TRAIL MEDALLION AND V–FENCE DETAILS

...\of16314fk.dgn [Int_ft2D] | 12-Feb-2015 11:09 AM | Designed by: C. Clausen | 02/2015 | Checked by: S. Daleo | 02/2015

STATE	PROJECT	SHEET NUMBER
OR	PFH 163(19)	E.4

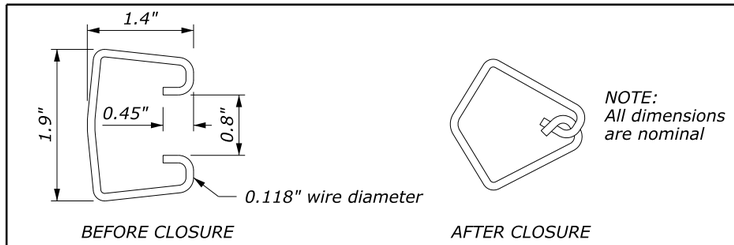

INTERLOCKING WIRE FASTENER

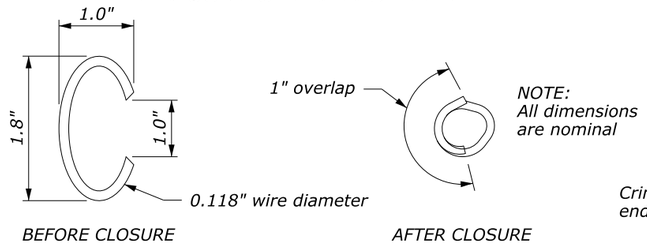

OVERLAPPING RING WIRE FASTENER
(Not allowed for basket to basket connection)

ALTERNATE TYING FASTENERS

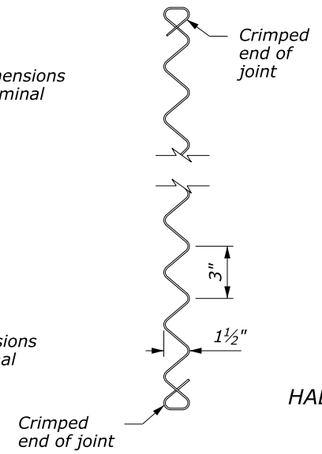

0.150" DIAMETER SPIRAL BINDER

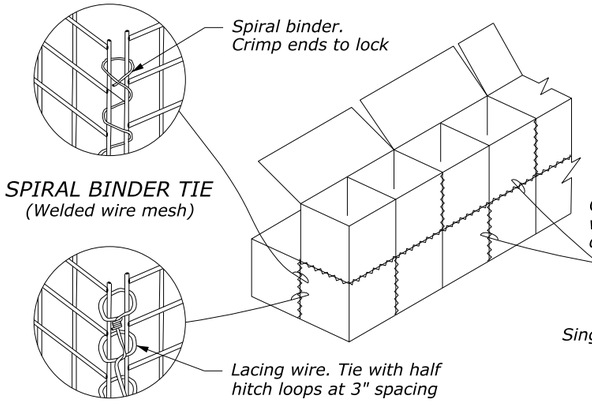

SPIRAL BINDER TIE
(Welded wire mesh)

HALF HITCH LACING DETAIL
(Welded wire mesh)

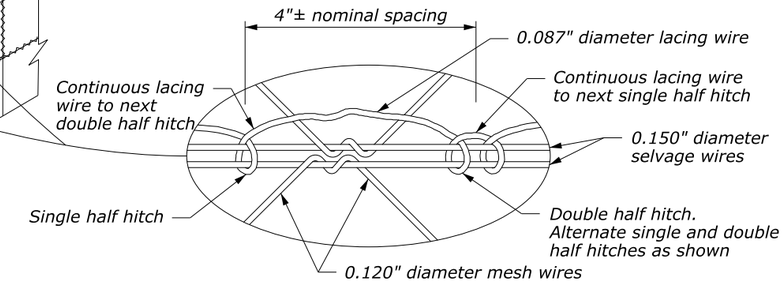

HALF HITCH LACING DETAIL
(Twisted wire mesh)

TYPICAL INSTALLATION GABION BASKETS

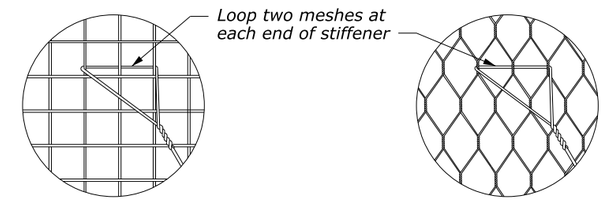

WELDED WIRE MESH

TWISTED WIRE MESH

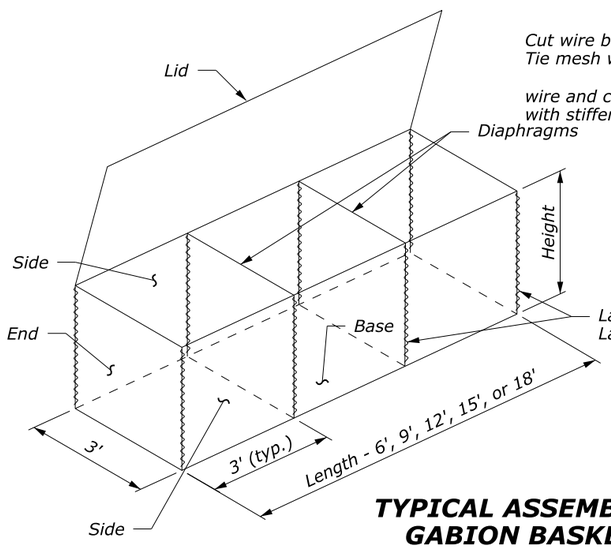

TYPICAL ASSEMBLED GABION BASKET

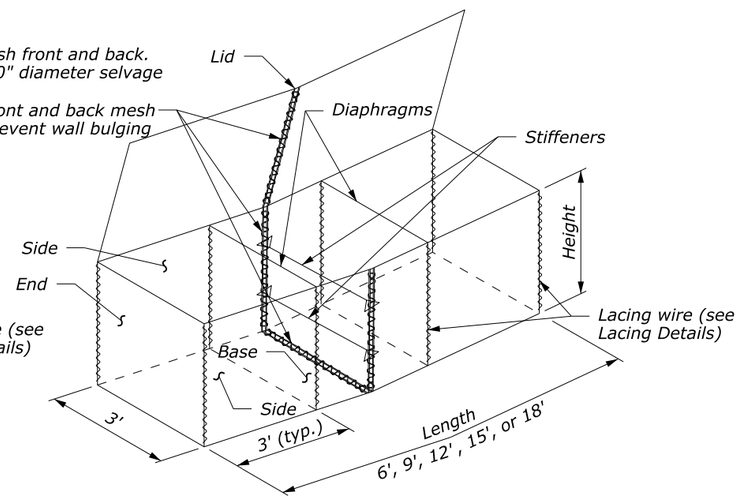

ASSEMBLED GABION BASKET IN WALL GRADE TRANSITION AREAS

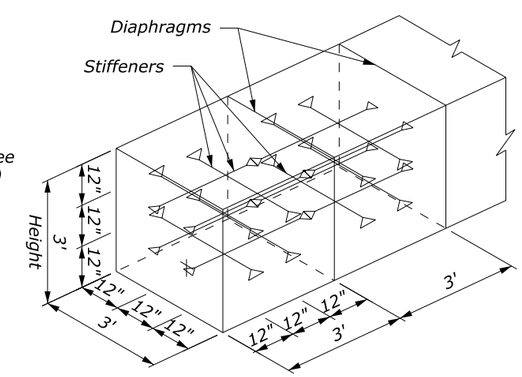

ALL END GABION CELLS

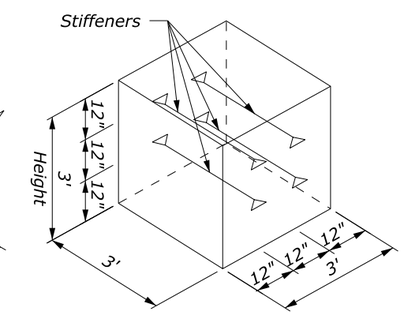

ALL INTERIOR GABION CELLS

TYPICAL STIFFENERS

GABION BASKET NOMINAL SIZES AND CAPACITY				
Size Code Letter	Size in feet		Diaphragm Partitions	Capacity (CUYD)
	Length	Height		
A	6	3.0	1	2.00
B	9	3.0	2	3.00
C	12	3.0	3	4.00
X	15	3.0	4	5.00
Y	18	3.0	5	6.00
D	6	1.5	1	1.00
E	9	1.5	2	1.50
F	12	1.5	3	2.00
G	6	1.0	1	0.67
H	9	1.0	2	1.00
I	12	1.0	3	1.33

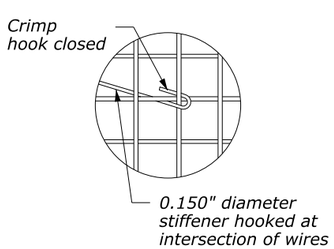

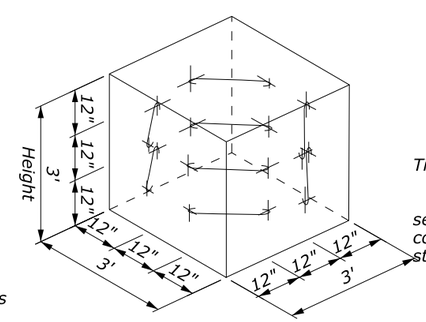

ALL GABION CELLS

OPTIONAL STIFFENERS WELDED WIRE GABION BASKET

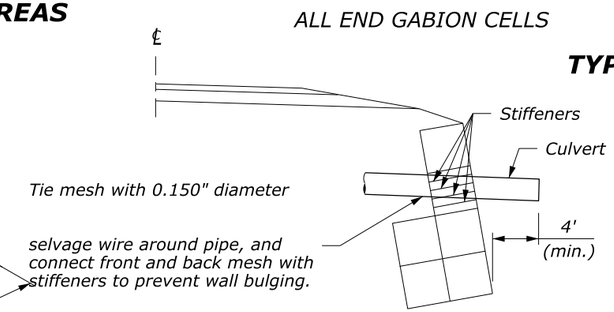

TYPICAL CULVERT INSTALLATION
THROUGH GABION WALL

NO SCALE

NOTE:

1. All components shall be non-reflective stained galvanized steel.

U.S. DEPARTMENT OF TRANSPORTATION
FEDERAL HIGHWAY ADMINISTRATION
WESTERN FEDERAL LANDS HIGHWAY DIVISION

U.S. CUSTOMARY DETAIL

GABION BASKET

DETAIL APPROVED FOR USE --/----
REVISED:
DRAFT: 9/2011

DETAIL
W253-1

NPS PMIS NO.: XXXXX DRAWING NO.: XXX-XXXXX

c:\pw_workdir\ch2mhill_tbg\ovegvary\d0263395\of16314fl.dgn [Int_ft2D]
27 January 2015 1:45 PM

STATE	PROJECT	SHEET NUMBER
OR	PFH 163(19)	E.5

ROCKERY WALL DESIGN TABLE

HEIGHT Hc (ft)	MIN. BASE ROCK WIDTH B (ft)	MIN. ROCK WEIGHT (lb)		
		BASE ROCK	FACING ROCK	CAP ROCK
4 and less	2.5	660	200	200
4 - 5	2.75	2000	660	200
5 - 6	3	2000	660	200

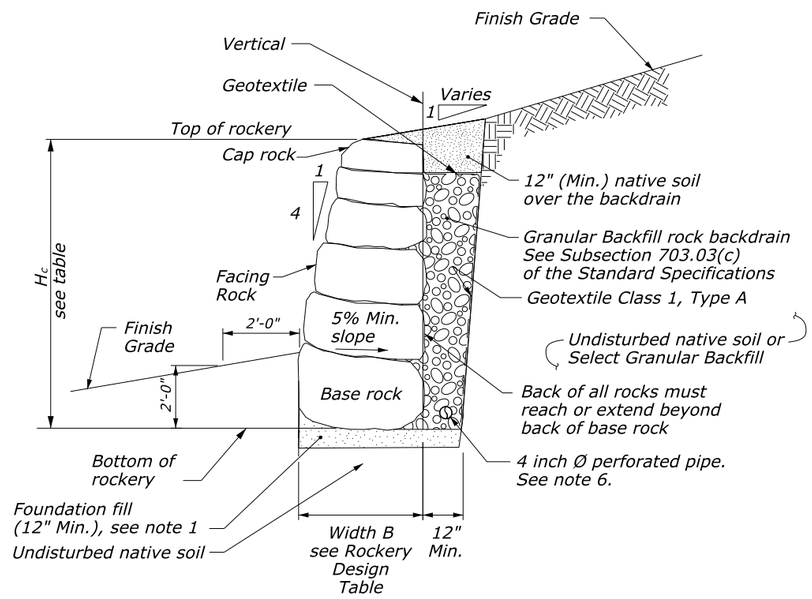

ROCKERY WALL TYPICAL SECTION

NOTE:

1. Provide and place foundation fill material per Standard Specification Section 704.01 and 208.08(d).
2. Construct rockery and place base, facing, and cap rocks according to Standard Specification Section 252. Place each rock individually by equipment suitable for lifting, manipulating, and placing rocks of the size and shape specified. Ensure that each rock is firmly set and supported by underlying materials and adjacent rocks, do not support rocks on small rocks used to choke voids. Reposition or replace loose rocks.
3. A maximum tolerance of 6 inches may be applied toward the total base rock width. Do not consecutively place base rocks with widths less than B.
4. Place base, facing, and cap rocks so that their height dimension is not greater than their width. The longest dimension of the base, facing, and cap rocks is parallel to face of rockery.
5. Where loose, soft, or otherwise unsuitable foundation soil conditions are encountered, overexcavate and replace with foundation fill or contact the CO for supplemental recommendations.
6. Surround the perforated pipe on all sides by at least 4" granular backfill. Discharge outlet pipes to a protected outlet or other permanent drainage structure at low points in the rockery and at 100 feet (max.) spacing.
7. Do not construct rockeries or slopes exceeding the heights shown on the Rockery Design Table without prior written approval by the CO.
8. Construct rockeries parallel to curb grade unless otherwise noted.
9. Stability of temporary cut slopes is the responsibility of the contractor.

ROCKERY DETAIL

..\of16314fm.dgn [Int_ft2D] | 11-Feb-2015 04:06 PM | Designed by: C. Clausen 02/2015 | Checked by: S. Daleo 02/2015

STATE	PROJECT	SHEET NUMBER
OR	PFH 163(19)	F.1

ITEM 15705-0100 SILT FENCE	
LOCATION	QUANTITY (ft)
152+00 to 159+00	250
155+00 to 170+00	500
170+00 to 185+00	1000
185+00 to 200+00	350

ITEM 15706-1000 INLET PROTECTION	
LOCATION	QUANTITY (ea)
152+00 to 155+00	1
155+00 to 170+00	3
170+00 to 185+00	1

ITEM 63503-1000 TEMPORARY TRAFFIC CONTROL PLASTIC FENCE	
LOCATION	QUANTITY (ft)
170+00 to 185+00	350
185+00 to 200+00	250

ITEM 15706-1600 STABILIZED CONSTRUCTION EXIT	
LOCATION	QUANTITY
152+00 to 189+00	1
170+00 to 185+00	1
185+00 to 200+00	1

ITEM 61801 CONCRETE BARRIER	
LOCATION	QUANTITY (ea)
170+00 to 185+00	8

ITEM 15705-1400 FIBER ROLL	
LOCATION	QUANTITY (ft)
170+00 to 185+00	1,800
152+00 to 159+00	50
185+00 to 200	150

ITEM 15703-2500 MULCH, HYDRAULIC METHOD	
LOCATION	QUANTITY (sf)
152+00 to 155+00	3,000
155+00 to 170+00	6,750
170+00 to 185+00	20,000
185+00 to 200+00	5,000
200+00 to 215+00	1,000
215+00 to 218+46	1,000

ITEM 15706-1800 TEMPORARY STONE OUTLET STRUCTURE	
LOCATION	QUANTITY (ea)
170+00 to 185+00	2

NOTE:

1. See sheet F.9 for silt fence details.
2. See sheet F.10 for inlet protection details.
3. See sheet F.11 for fiber roll details.

TABULATION OF EROSION CONTROL QUANTITIES

Designed by: N. Williams 02/2015
Checked by: S. Mader 02/2015
12-Feb-2015 11:42 AM
...\of16314da.dgn [int_ft2D]

STATE	PROJECT	SHEET NUMBER
OR	PFH 163(19)	F.2

LEGEND	
DEVICE	SYMBOL
Silt fence	
Plastic fence	xx xxxx
Area to stabilize with mulch	
Fiber roll	
Tree protection	
Inlet protection	
Identified wetlands	
Temporary stone outlet structure	

EROSION CONTROL PLAN

Designed by: N. Williams 02/2015
Checked by: S. Mader 02/2015
11-Feb-2015 04:51 PM
...\of16314db.dgn [Int_ft2D]

STATE	PROJECT	SHEET NUMBER
OR	PFH 163(19)	F.3

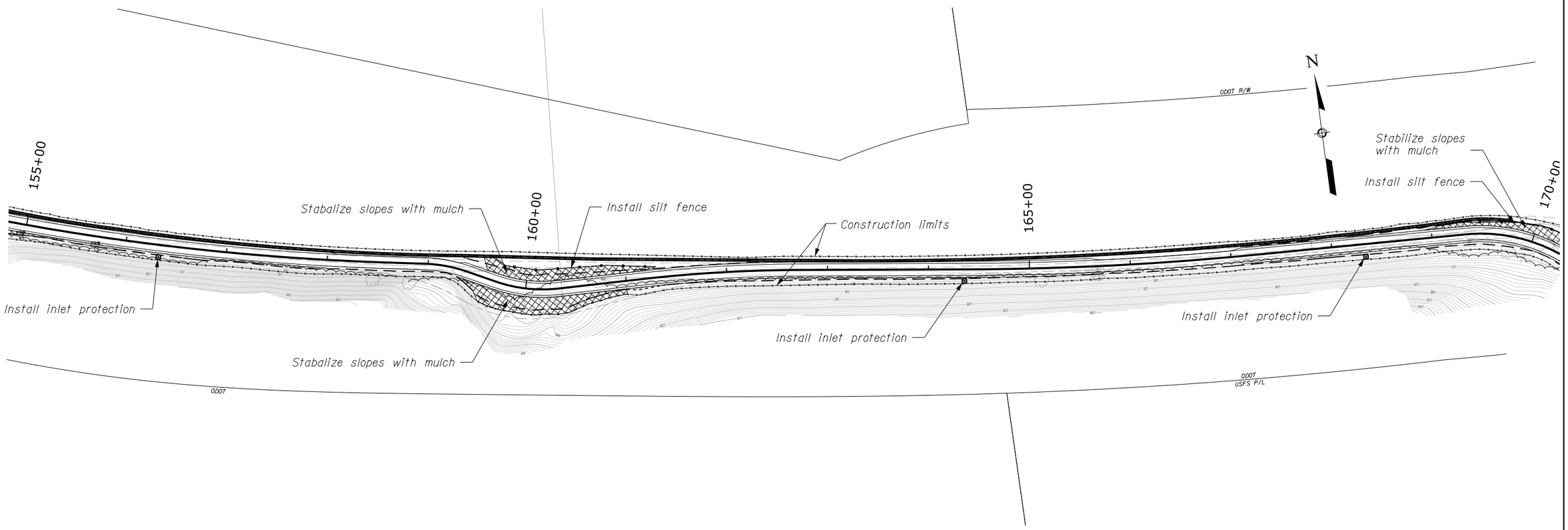

EROSION CONTROL PLAN

Designed by:	Checked by:
N. Williams	S. Mader
02/2015	02/2015

11-Feb-2015 04:51 PM

...\of16314dc.dgn [Int_ft2D]

STATE	PROJECT	SHEET NUMBER
OR	PFH 163(19)	F.4

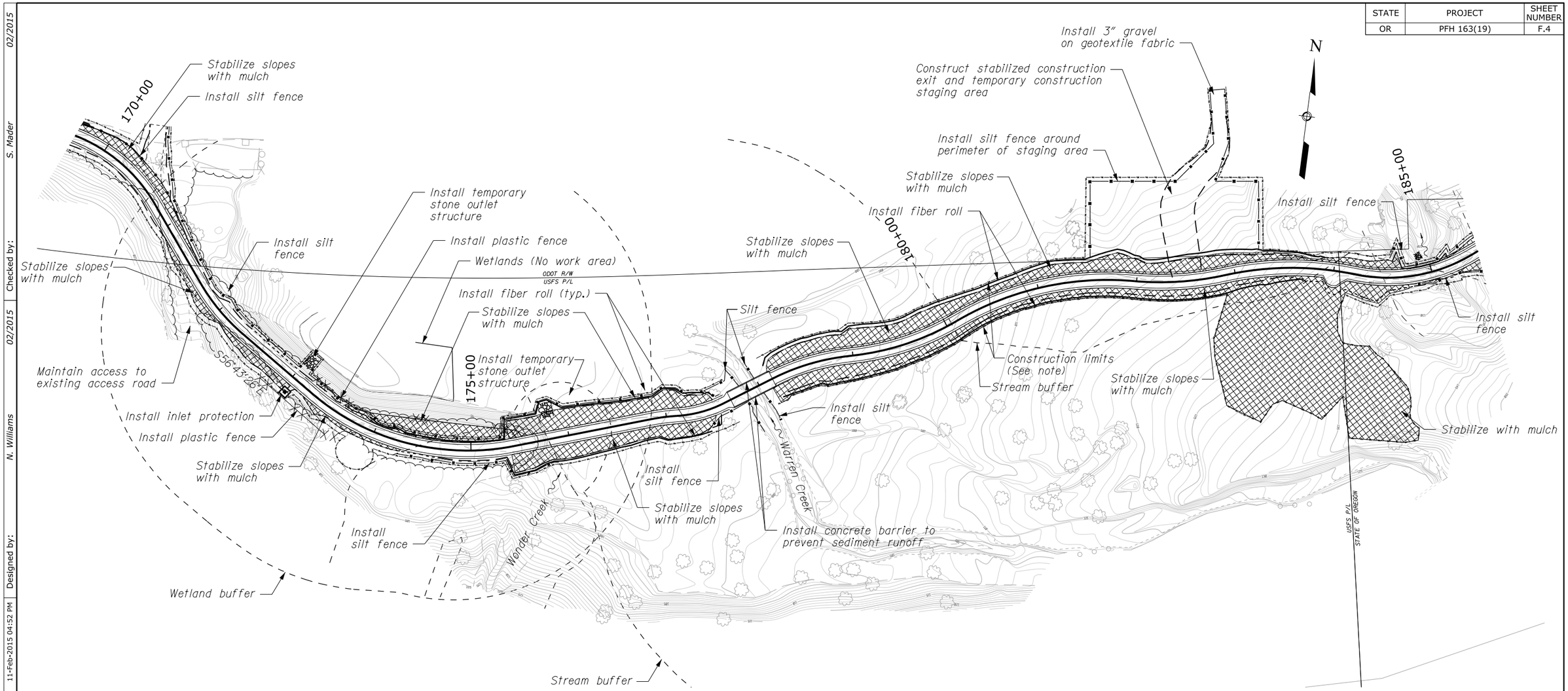

FOOTNOTE:

1/ Construction limits for forest restoration project not shown.

EROSION CONTROL PLAN

02/2015 | S. Mader | 02/2015 | Checked by: | N. Williams | 11-Feb-2015 04:52 PM | Designed by: | ...\of16314dd.dgn [Int_ft2D]

STATE	PROJECT	SHEET NUMBER
OR	PFH 163(19)	F.5

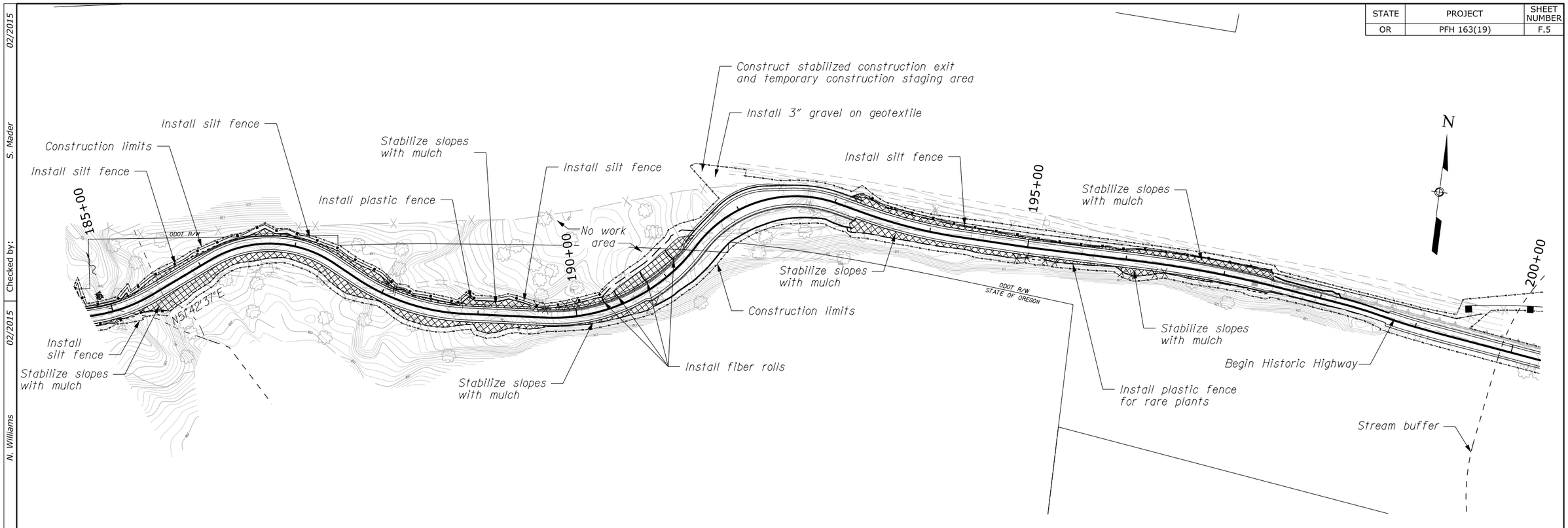

EROSION CONTROL PLAN

02/2015 | S. Mader | 02/2015 | N. Williams | 11-Feb-2015 04:52 PM | Designed by: | Checked by: | ...\of1631de.dgn [int_ft2D]

STATE	PROJECT	SHEET NUMBER
OR	PFH 163(19)	F.6

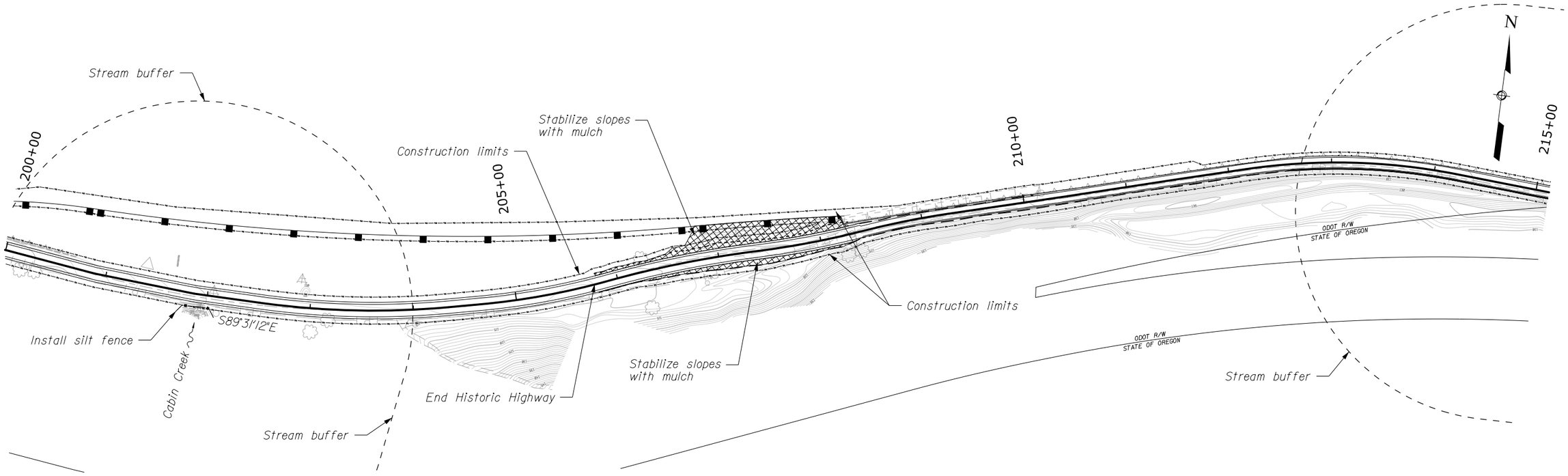

EROSION CONTROL PLAN

...\of16314df.dgn [Int_ft2D] | 11-Feb-2015 04:52 PM | Designed by: N. Williams | 02/2015 | Checked by: S. Mader | 02/2015

STATE	PROJECT	SHEET NUMBER
OR	PFH 163(19)	F.7

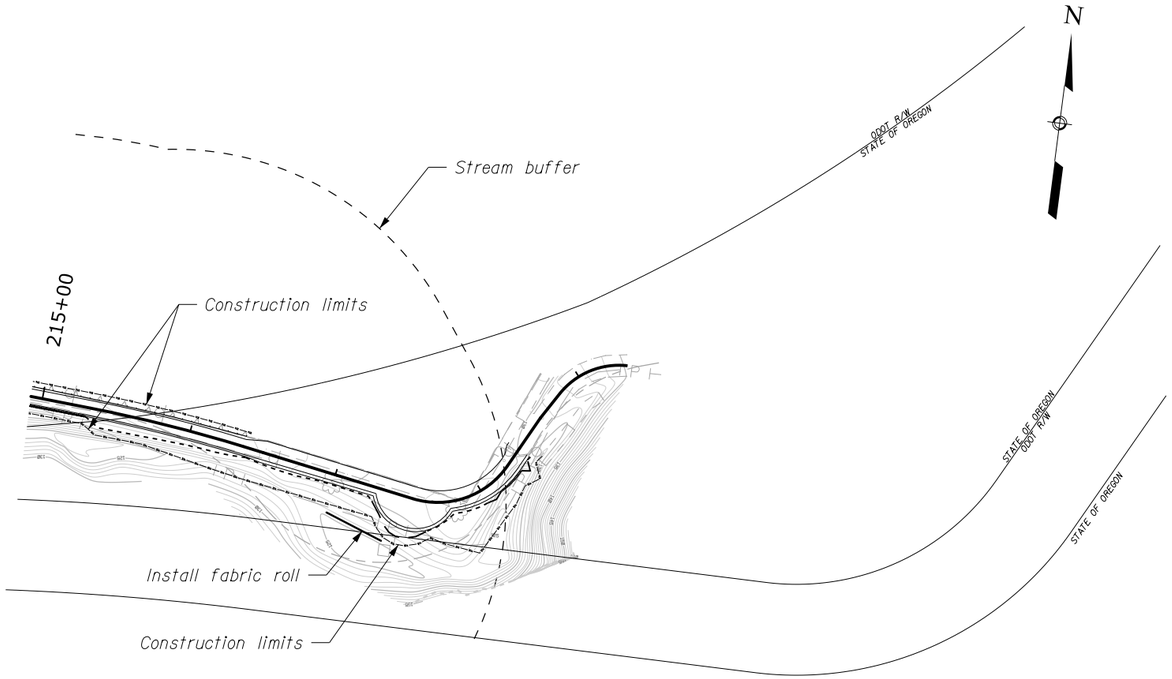

EROSION CONTROL PLAN

...\of163t4dg.dgn [int_ft2D] | 11-Feb-2015 04:52 PM | Designed by: N. Williams 02/2015 | Checked by: S. Mader 02/2015

NARRATIVE DESCRIPTION

The proposed project includes connections of the intact and abandoned segments of Historic Columbia River Highway (HCRH) State Trail for recreational uses. This portion of the trail runs from Lindsey Creek to the Starvation Creek Trailhead. The proposed segment starts at the Lindsey Creek area and meanders east along the south side of I-84. This segment of trail terminates at Starvation Creek Trailhead where it matches into an existing trail. The route of the project passes through land owned by the State of Oregon (ODOT right of way and Oregon Parks and Recreation Department), and federal land managed by the USDA Forest Service. The proposed project will follow the HCRH State Trail Guidelines (ODOT 2011).

EXISTING CONDITIONS AND PROJECT DESCRIPTION

The topography of the project area is surrounded by rolling to mountainous terrain. The first 2,000 feet of the trail is a gently rolling longitudinal grade with the right side of the trail running at the base of an existing slope with grades up to approximately a 1:1 H:V. The close proximity of the steep side slope creates a topographic as well as a design constraint to avoid cutting into the slope. As the trail veers away from the I-84 shoulder, the existing terrain steepens as the trail follows grades rolling up and back down at 5%. The terrain flattens as the trail reaches an existing segment of the historic highway. From the historic highway to the Starvation Creek Trailhead the trail width is constrained between the existing I-84 exit ramp to Starvation Creek Trailhead and a steep 1:1 H:V slope that transitions into a rock fall catchment berm.

GENERAL SEQUENCING OF EROSION AND SEDIMENT CONTROL PRACTICES

Numerous Best Management Practices (BMPs) outlined in the erosion and sediment control sheets will be implemented throughout the construction of the trail. The primary intent of the selected BMPs is to prevent erosion and to control sediment transport, prior to final stabilization. The primary BMPs presented in this erosion and sediment control design include:

1. Preserve existing vegetation. Contractor to install highly visible fencing, and prior flagging of disturbance limits will be implemented to preserve existing vegetation to the extent practicable. Preserving vegetation will also act as a vegetative buffer to minimize stormwater velocity and control sediment transport.
2. Temporarily stabilize disturbed, or placed soils, with mulch. Mulch stabilization will minimize active erosion on disturbed soils prior to final stabilization. Mulch will be applied in conjunction with proper surface roughening techniques, which will minimize stormwater velocity and prevent erosion.
3. Silt fence down gradient of land disturbing activities. Silt fence will be installed on contour to capture sediment in stormwater runoff downgradient of construction activities.
4. Fiber rolls. Fiber rolls will be installed on disturbed slopes to minimize stormwater velocity and prevent erosion.
5. Inlet Protection. Stormwater collection features will be protected with inlet protection to minimize sediment discharge into stormwater conveyance systems.
6. Seed. Apply temporary seeding (sterile wheat hybrid) to finished soil surfaces.

EROSION AND SEDIMENT CONTROL NOTES:

1. The predominant soil type in the area is prone to water erosion. Therefore the implementation of erosion control practices must be an integral part of all aspects of construction.
2. The implementation of these erosion control plans and the construction, maintenance, replacement, and upgrade of these facilities is the responsibility of the contractor until all construction is completed, approved, and the site is stabilized.
3. The erosion control measures shown in these plans must be constructed in connection with all grading activities and in such a manner to insure that sediment and sediment laden water does not enter the receiving water bodies, nearby sensitive areas, or stormwater conveyance systems.
4. The erosion and sediment control BMPs shown on this plan are the minimum requirements for anticipated site conditions, during the active construction period, these erosion and sediment control BMPs shall be maintained and upgraded as needed for unexpected storm events and to insure that sediment laden water does not leave the construction site, or enter wetland and streams
5. Temporarily stabilize existing bare soil areas by applying hydro bonded fiber matrix or tackifying weedfree straw mulch and crimping into the surface. The application rate for straw mulch is 2,500 lbs per acre. Permanently seed the disturbed upland areas using the seed mix and planting specified in the Final Landscaping Plan.
6. Silt fence will be installed on contour at the locations specified in erosion and sediment control sheets. Silt fence will be installed per detail on E.10 in accordance with Standard Detail 157-1. Silt fence will remain in place until final stabilization has occurred.
7. Fiber rolls will be installed on contour, perpendicular to the flow velocity, at the locations specified erosion and sediment control drawings. Fiber rolls will be installed per detail on Sheet F.11. Fiber rolls will remain in place for the duration of the project and will be left in place at the end of the project.
8. Land disturbing activities will be conducted under ODOT's existing 1200-CA.
9. Install containment systems (i.e. tarps) to capture debris before falling into creeks while on culverts and bridges.

INSPECTION FREQUENCY

Site Condition	Minimum Frequency
1. Active Period	Daily when stormwater runoff, including runoff from snowmelt, is occurring. At least once every two weeks, regardless of whether or not runoff is occurring.
2. Prior to the site becoming inactive or in anticipation of site inaccessibility.	Once to ensure that erosion and sediment control measures are in working order. Any necessary maintenance and repair must be made prior to leaving the site.
3. Inactive periods greater than fourteen (14) calendar days.	Once every two (2) weeks.
4. Periods during which the site is inaccessible due to inclement weather.	If practical, inspections must occur daily at a relevant and accessible discharge point or downstream location.

EROSION CONTROL PLAN NOTES

...\ofi6314dh.dgn [Int_ft2D] | 11-Feb-2015 04:52 PM | Designed by: N. Williams | 02/2015 | Checked by: S. Mader | 02/2015

STATE	PROJECT	SHEET NUMBER
DOT	PFH 163 (19)	F.9

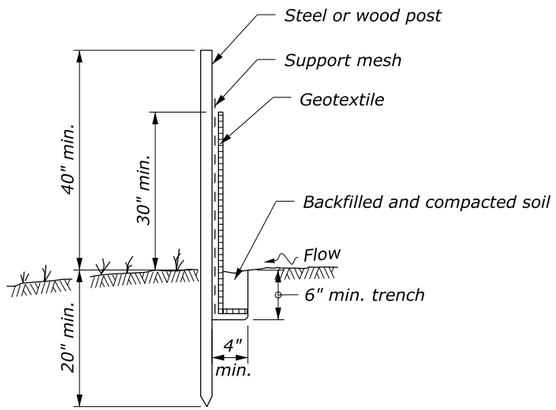

POST AND GEOTEXTILE INSTALLATION DETAIL

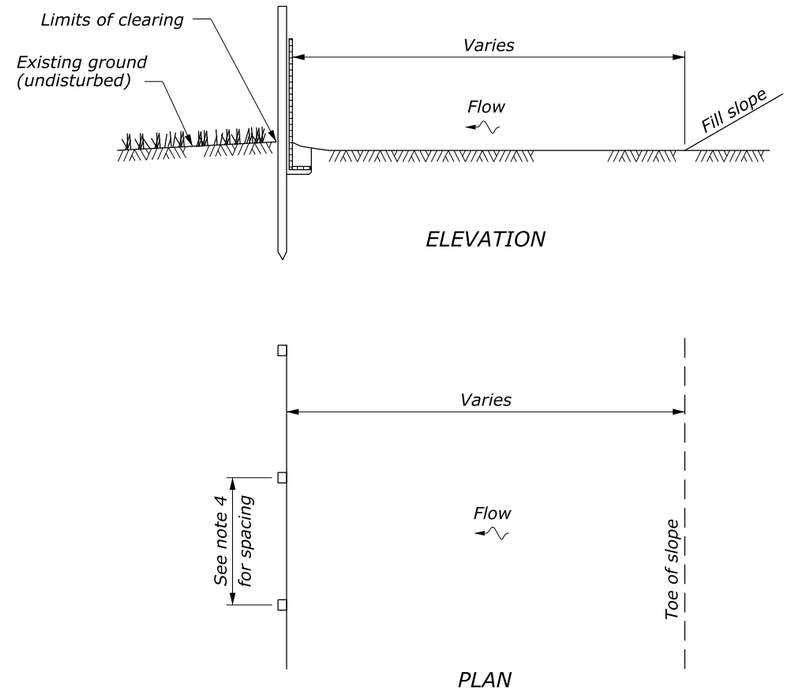

SILT FENCE INSTALLATION AT TOE OF FILL

NOTE:

1. *Use drainage ditch installation for low flow conditions only when specified on Erosion Control Plan.*
2. *Alternate preassembled silt fence options will be allowed as long as specified dimensions are satisfied. Follow manufacturer's recommendations for installation procedures. All types must ensure silt fence remains attached to, and does not slide down, supporting posts.*
3. *Install silt fence along ground contours. Curve ends of silt fence upgrade to prevent water from running around the ends.*
4. *10 ft. (max.) spacing with fence support.*
   6 ft. (max.) spacing without fence support.

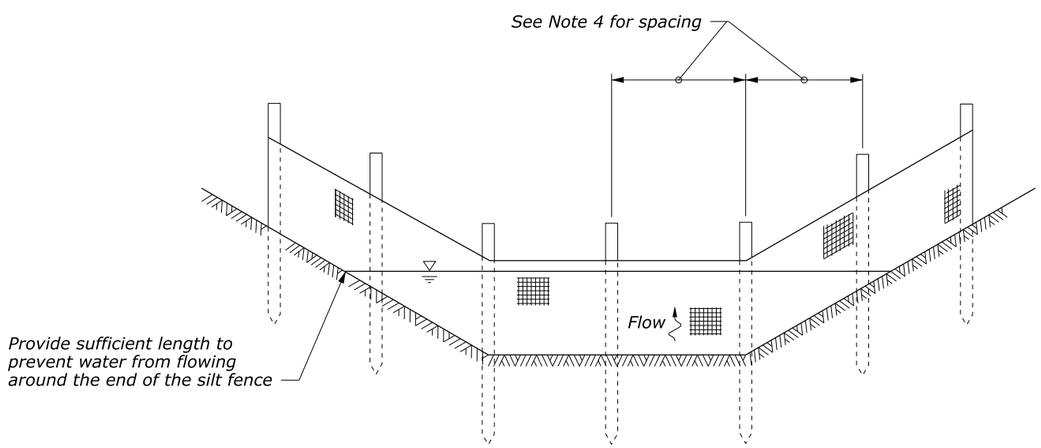

SILT FENCE INSTALLATION IN A DRAINAGE DITCH

See Note 1

NO SCALE

U.S. DEPARTMENT OF TRANSPORTATION
FEDERAL HIGHWAY ADMINISTRATION
FEDERAL LANDS HIGHWAY

U.S. CUSTOMARY STANDARD

SILT FENCE

STANDARD APPROVED FOR USE 6/2005
REVISED: 6/2007
DRAFT: 3/2014

STANDARD
157-1

27 January 2015 5:28 PM c:\pw_workdir\ch2mhill_tbg\ovegvary\d0263395\of16314di.dgn [USC]

STATE	PROJECT	SHEET NUMBER
DOT	PFH 163 (19)	F.10

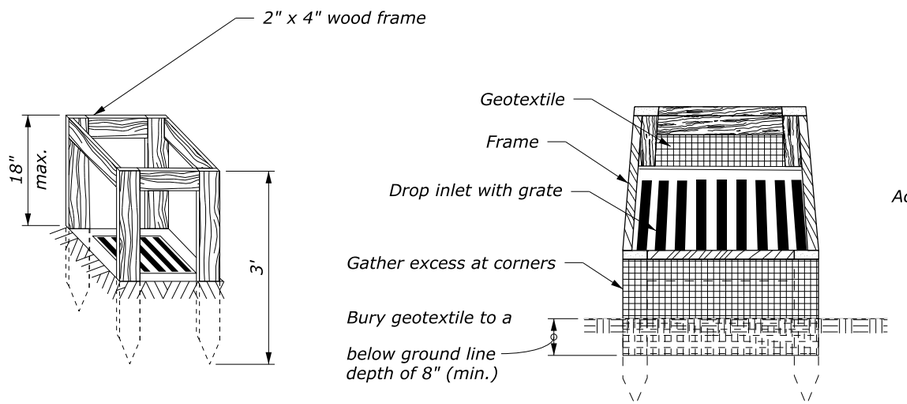

SILT FENCE DROP INLET PROTECTION (TYPE A)

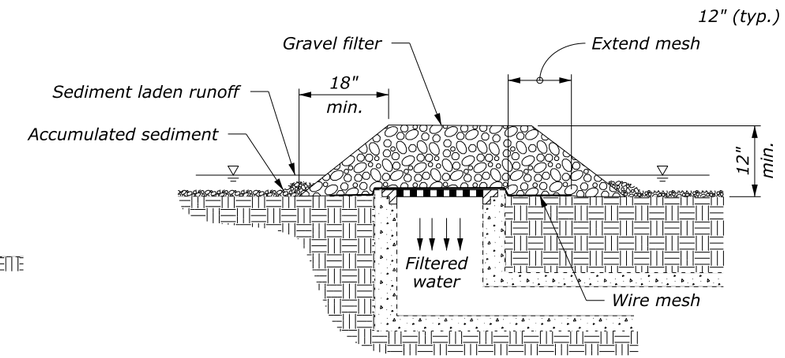

GRAVEL AND WIRE MESH DROP INLET PROTECTION (TYPE B)

NOTE:

1. For gravel filters use 2"- 3" diameter coarse aggregate.
2. Use wire mesh with ½" x ½" openings.
3. Use type A inlet protection in sump locations only.
4. Use type B inlet protection only in sump locations where heavy concentrated flows are not expected. Do not use where ponding around the structure might cause inconvenience or damage.

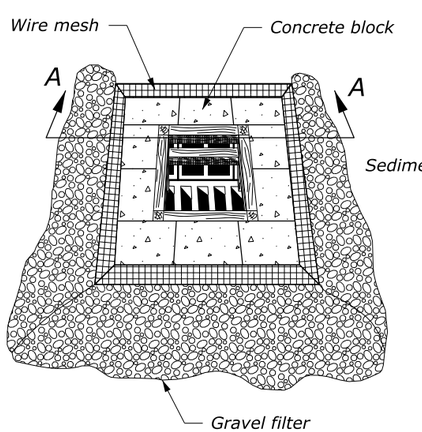

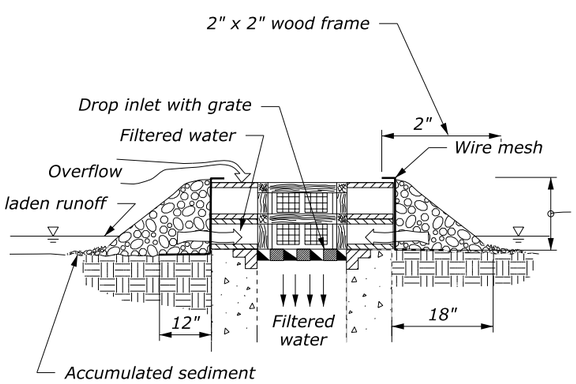

SECTION A-A

BLOCK AND GRAVEL DROP INLET PROTECTION (TYPE C)

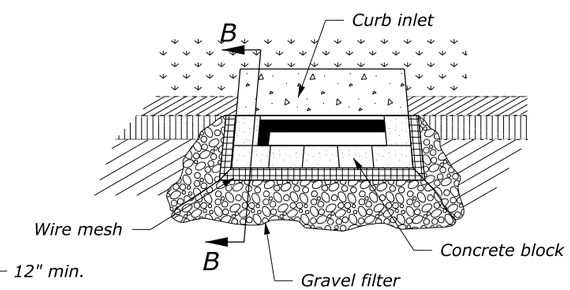

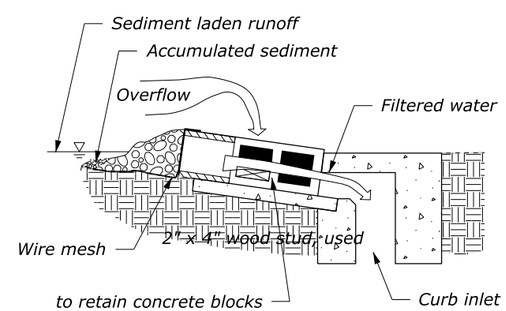

SECTION B-B

CURB INLET PROTECTION, BLOCK AND GRAVEL (TYPE D)

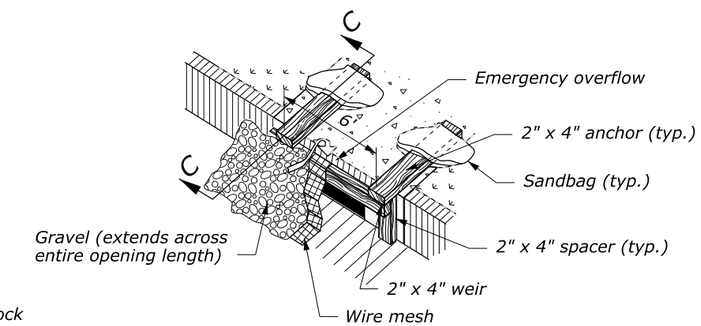

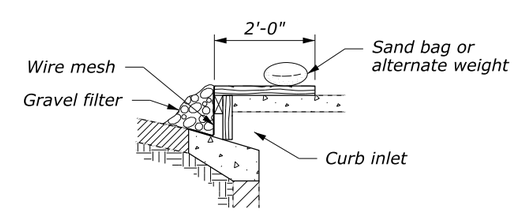

SECTION C-C

CURB INLET PROTECTION, WOODEN WEIR (TYPE E)

NO SCALE

U.S. DEPARTMENT OF TRANSPORTATION
FEDERAL HIGHWAY ADMINISTRATION
FEDERAL LANDS HIGHWAY

U.S. CUSTOMARY STANDARD

TEMPORARY INLET PROTECTION

STANDARD APPROVED FOR USE 6/2005

REVISED:
DRAFT: 3/2014

STANDARD 157-2

27 January 2015 5:30 PM c:\pw_workdir\ch2mhill_tbg\ovegvary\d0263395\of16314dj.dgn [USC]

STATE	PROJECT	SHEET NUMBER
DOT	PFH 163 (19)	F.11

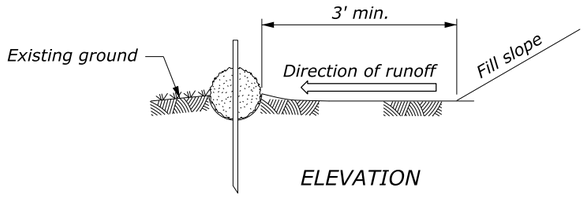

ELEVATION

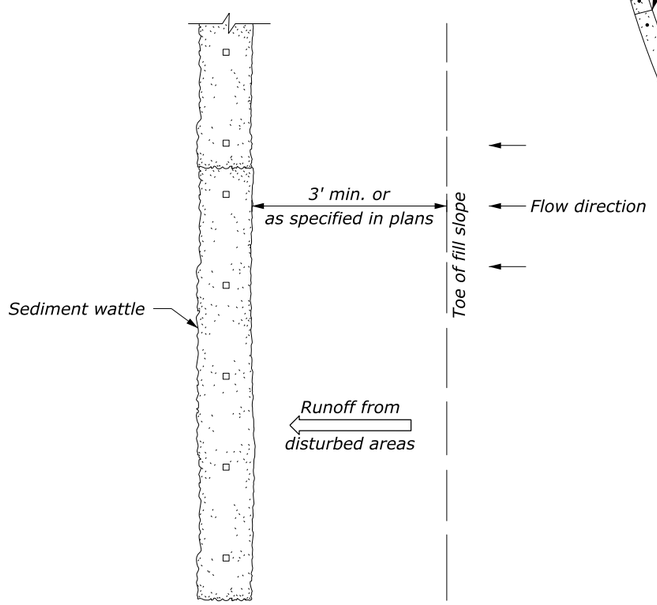

PLAN

INSTALLATION BEYOND TOE OF SLOPE

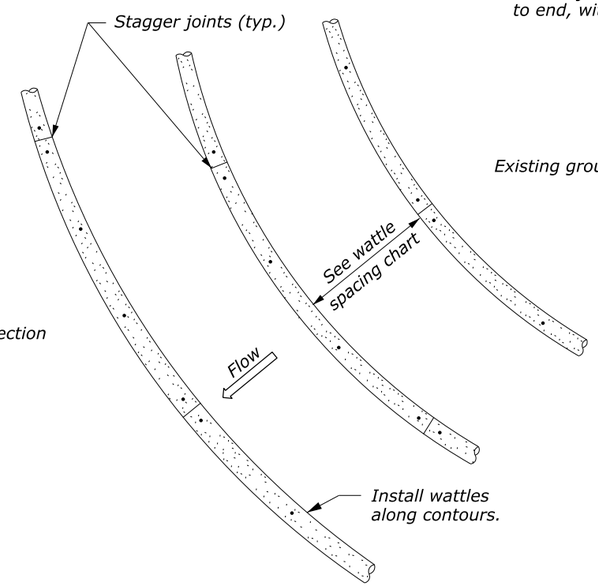

INSTALLATION ALONG SLOPES

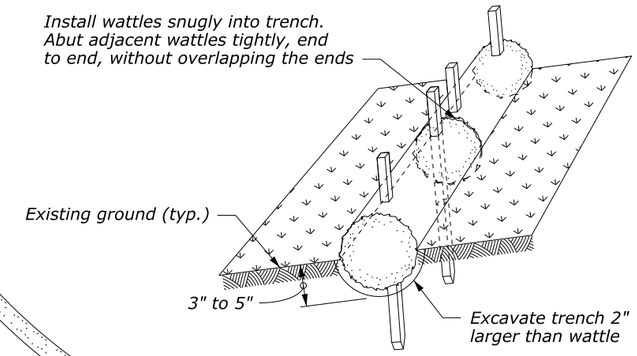

Step 1: Excavate trench and install wattles

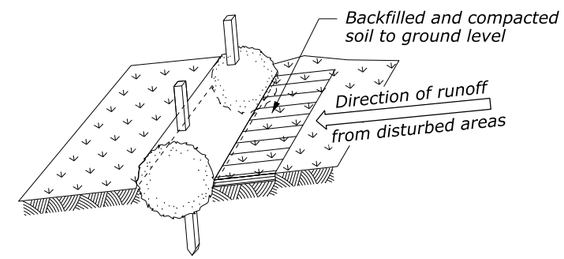

Step 2: Backfill soil against wattles

PROPERLY STAKED AND ENTRENCHED WATTLE

NOTE:

1. Drive stakes at each end and at 4' spacing until wattle is secure to slope. Do not crush wattle while staking. Live stakes may be used for permanent installations.
2. Use drainage ditch installation only in low flow conditions.

STAKES REQUIRED	
Wattle length (ft)	Stakes required for each wattle
25	8
20	6
12	4

WATTLE SPACING	
Slope	Spacing (ft)
1:4 or flatter	40
1:3	30
1:2	20
1:1	10

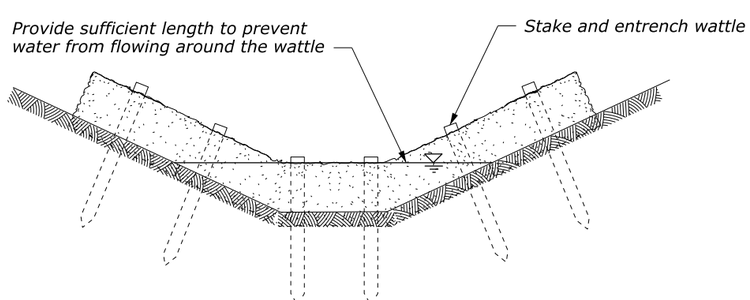

ELEVATION

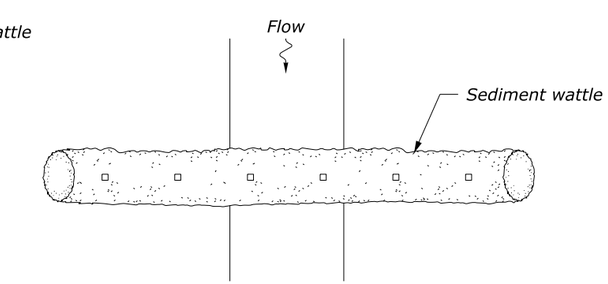

PLAN

DRAINAGE DITCH INSTALLATION

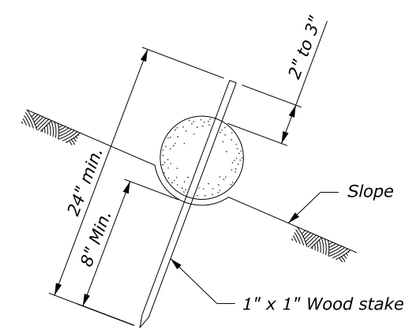

WATTLE STAKING DETAIL

NO SCALE

U.S. DEPARTMENT OF TRANSPORTATION
FEDERAL HIGHWAY ADMINISTRATION
WESTERN FEDERAL LANDS HIGHWAY DIVISION

U.S. CUSTOMARY DETAIL

SEDIMENT WATTLE

DETAIL APPROVED FOR USE 9/2007

REVISED:

DETAIL W157-20

c:\pw_workdir\ch2mhill_tbg\ovegvary\d0263395\of16314dk.dgn [USC] 27 January 2015 5:32 PM

STATE	PROJECT	SHEET NUMBER
OR	PFH 163(19)	F.12

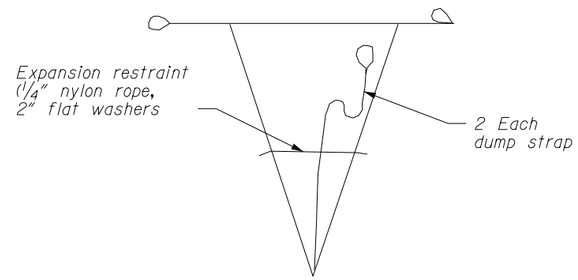

BAG DETAIL

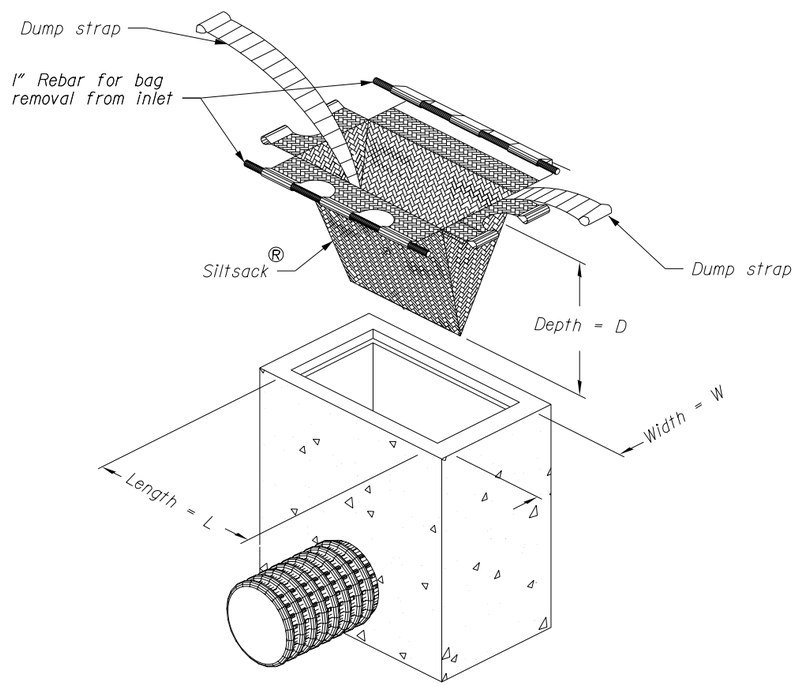

REGULAR FLOW ONLY
DO NOT USE HIGH FLOW INSERT BAGS.

CATCH BASIN INSERT BAG

PRELIMINARY
NOT FOR CONSTRUCTION

EROSION CONTROL DETAILS

Designed by: N. Williams 02/2015
Checked by: S. Mader 02/2015
27-Jan-2015 04:58 PM
...\of16314dt.dgn [Int_ft2D]

Note: The quantities shown hereon are approximate and are subject to field adjustments.

TABULATION OF DRAINAGE QUANTITIES

STATE	PROJECT	SHEET NUMBER
OR	PFH 163(19)	G.1

PAY ITEM NUMBER			20702 -0600	25101 -0100	25101 -0400	60201 -0600	60201 -1200	60703 -0000	SKEW ANGLE	Allowable Pipe Material (See key below)	BEVELS 1V:nH	BEVELS 1V:nH	REMARKS
Station	ESTIMATED MAXIMUM COVER	STRUCTURAL EXCAVATION	GEOTEXTILE FILTER, CLASS 2, TYPE A	PLACED RIPRAP, METHOD A, CLASS 1	PLACED RIPRAP, METHOD A, CLASS 4	18-INCH PIPE CULVERT	48-INCH PIPE CULVERT	CLEANING CULVERTS IN PLACE			Lt	Rt	See below for numbered notes
	FEET	CUYD	SQYD	CUYD	CUYD	LNFT	LNFT	LNFT					
160+36	6	1				11		165	-	GS		1V:3H	Connect to Existing 18" CMP
173+04	8	25		3		41			90		1V:2H	1V:2H	
175+80	5	10	17		13		47		90	AS	1V:2H	1V:2H	
192+70	11	1				16		160	-			1V:1:H	Connect to Existing 18" CMP
PROJECT TOTAL		**37**	**17**	**3**	**13**	**68**	**47**	**325**					

NOTE:

1. Steel pipe culvert minimum wall thickness is the larger of ____" or the thickness required by the Std. 602-1 fill height table.
2. Aluminized steel pipe culvert minimum wall thickness is the larger of ____" or the thickness required by the Std. 602-1 fill height table (steel).
3. Aluminum pipe culvert minimum wall thickness is the larger of ____" or the thickness required by the Std. 602-1 fill height table.
4. Plastic pipe is not allowed when final installation is exposed. Furnish metal end sections for all plastic pipe including those specified with bevels. See Std. 602-5 for acceptable cell class.
5. See Std. 602-7 for acceptable concrete cell class.

Allowable Pipe Material

A	Aluminum
AS	Aluminized steel
C	Concrete
GS	Galvanized steel
P	Plastic
(blank)	Any appropriate material
x/__	Any appropriate material except __

C:\Users\sdaleo1\Documents\Projects\HCRH State Trail\Segment D\70%\1of16314ea.xlsx]Sheet 10-Feb-2015 11:27 Designed by: K. Walters Checked by: 2/2015 R. Altanasio 2/2015

PRELIMINARY
NOT FOR CONSTRUCTION

STATE	PROJECT	SHEET NUMBER
OR	PFH 163(19)	G.2

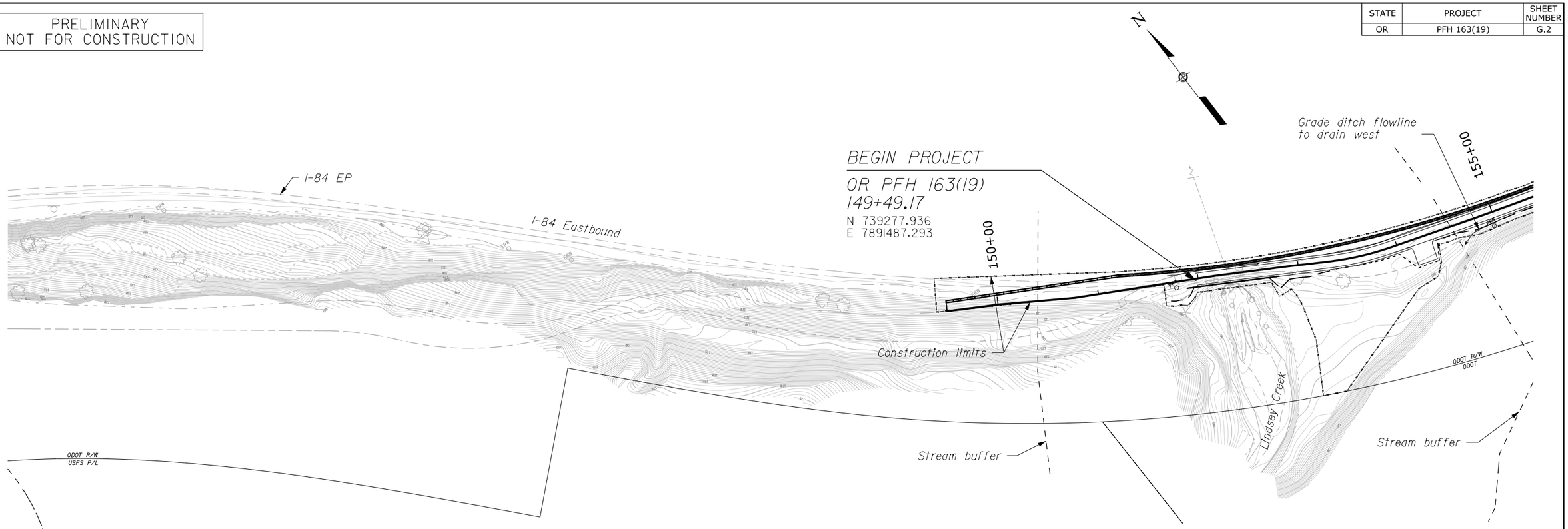

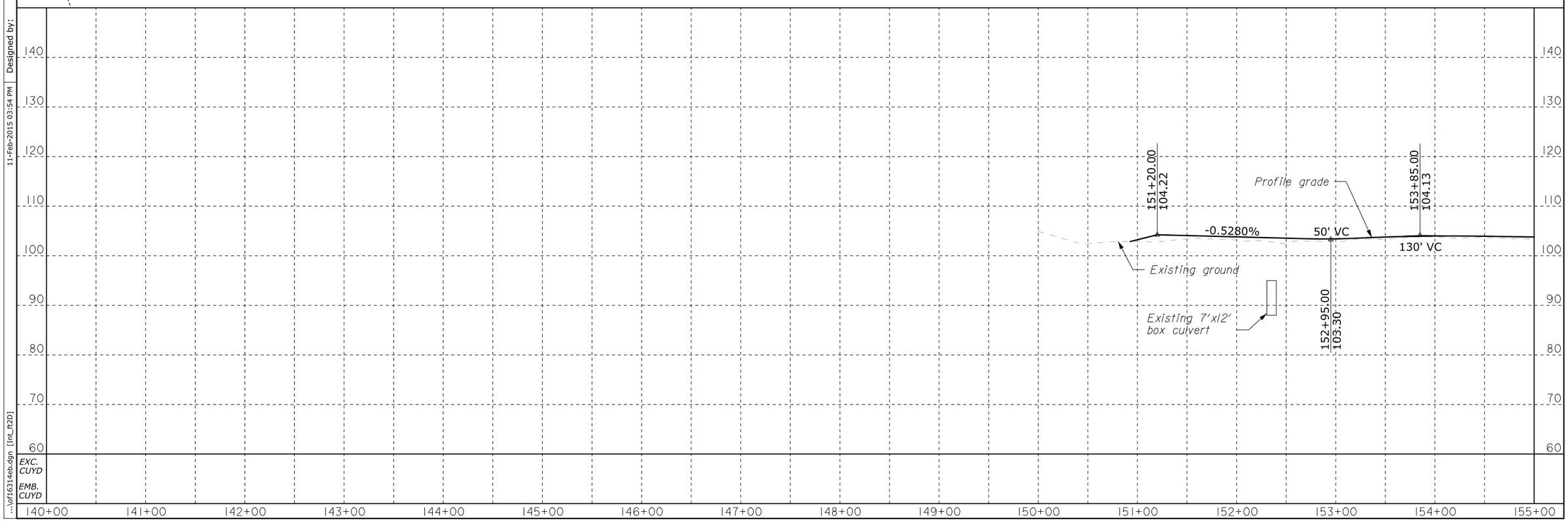

Designed by: 11-Feb-2015 03:54 PM
Checked by: K. Walters 02/2015
R. Attanasio 02/2015
...\of16314eb.dgn [Int_ft2D]

STATE	PROJECT	SHEET NUMBER
OR	PFH 163(19)	G.3

PRELIMINARY
NOT FOR CONSTRUCTION

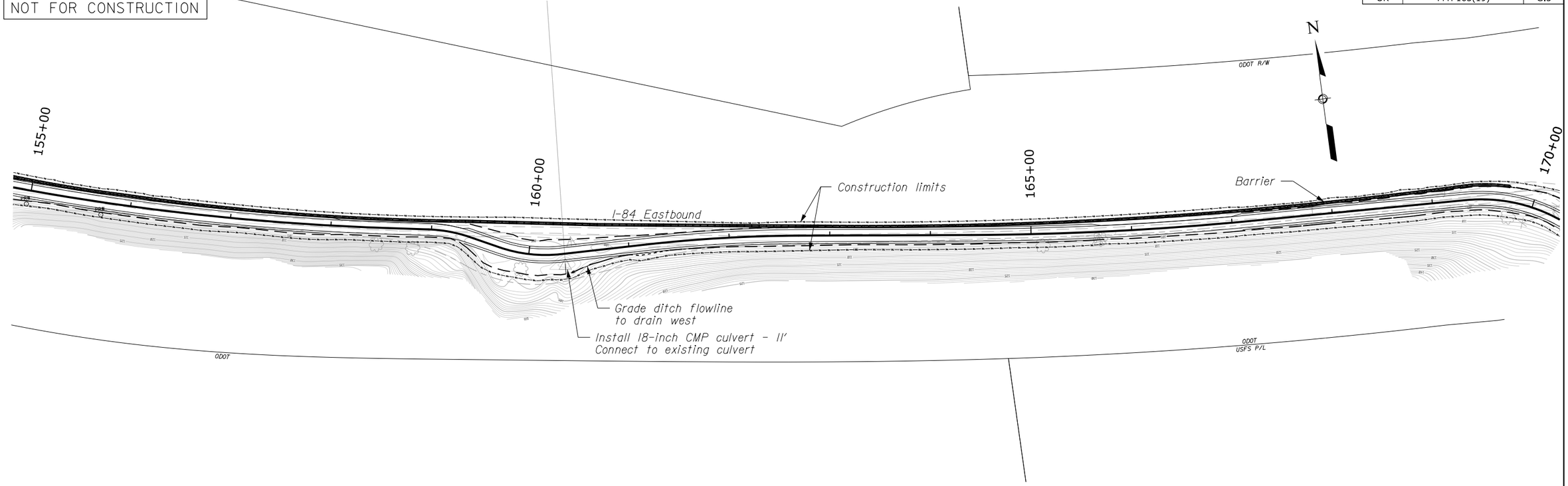

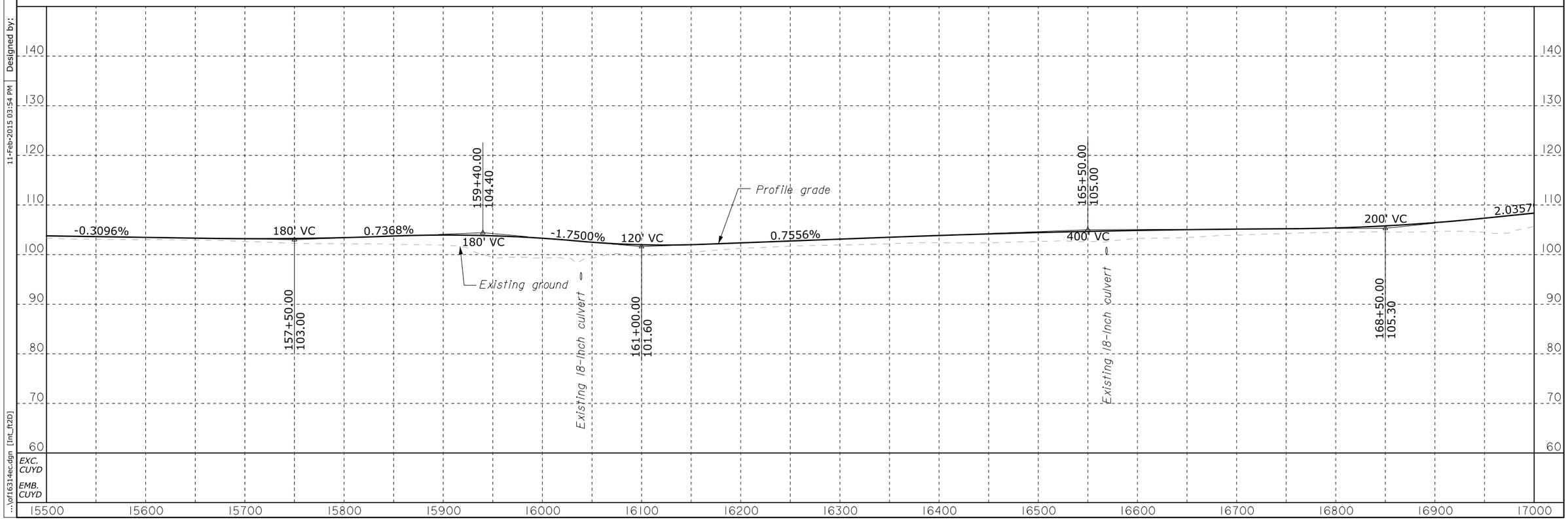

Designed by: 11-Feb-2015 03:54 PM
K. Walters 02/2015
Checked by: R. Attanasio 02/2015
...\of16314ec.dgn [Int_ft2D]

STATE	PROJECT	SHEET NUMBER
OR	PFH 163(19)	G.4

PRELIMINARY
NOT FOR CONSTRUCTION

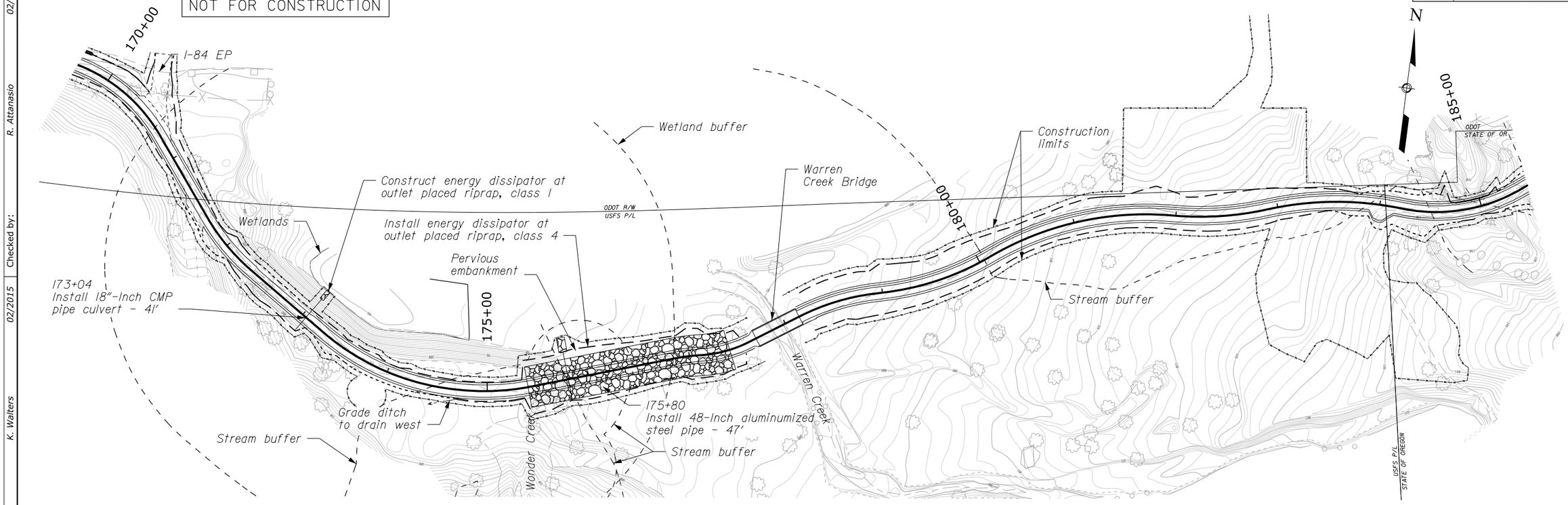

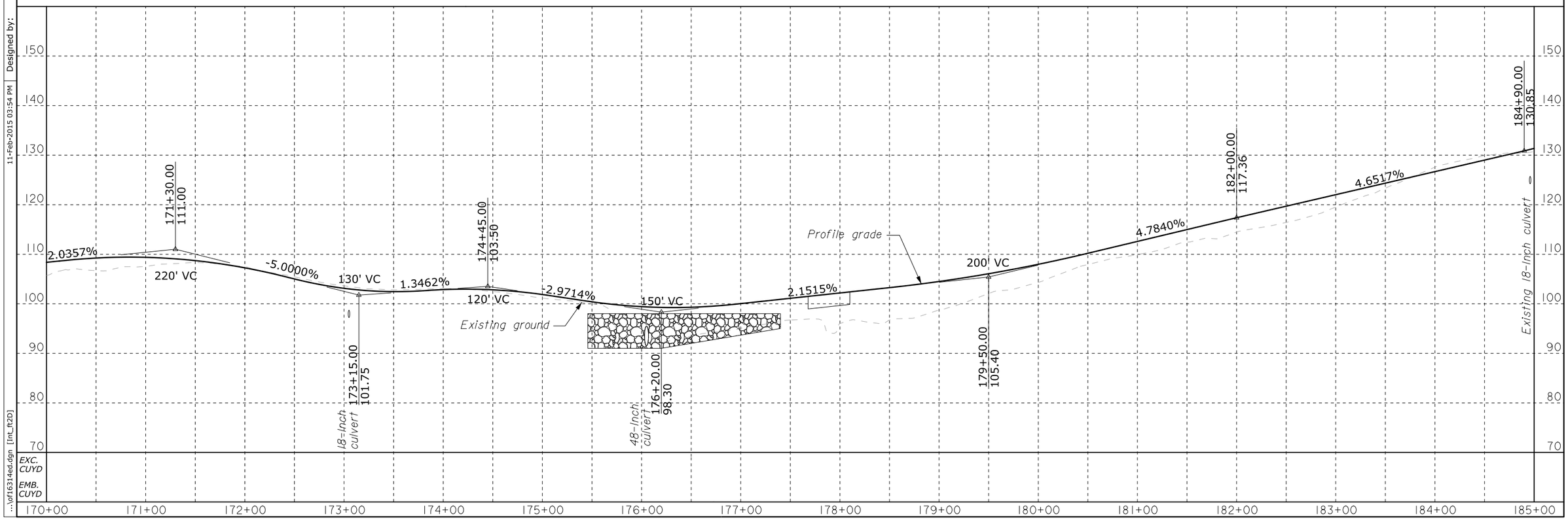

Designed by: 11-Feb-2015 03:54 PM
Checked by: K. Walters 02/2015
R. Attanasio 02/2015
...\of16314ed.dgn [Int_ft2D]

PRELIMINARY
NOT FOR CONSTRUCTION

STATE	PROJECT	SHEET NUMBER
OR	PFH 163(19)	G.5

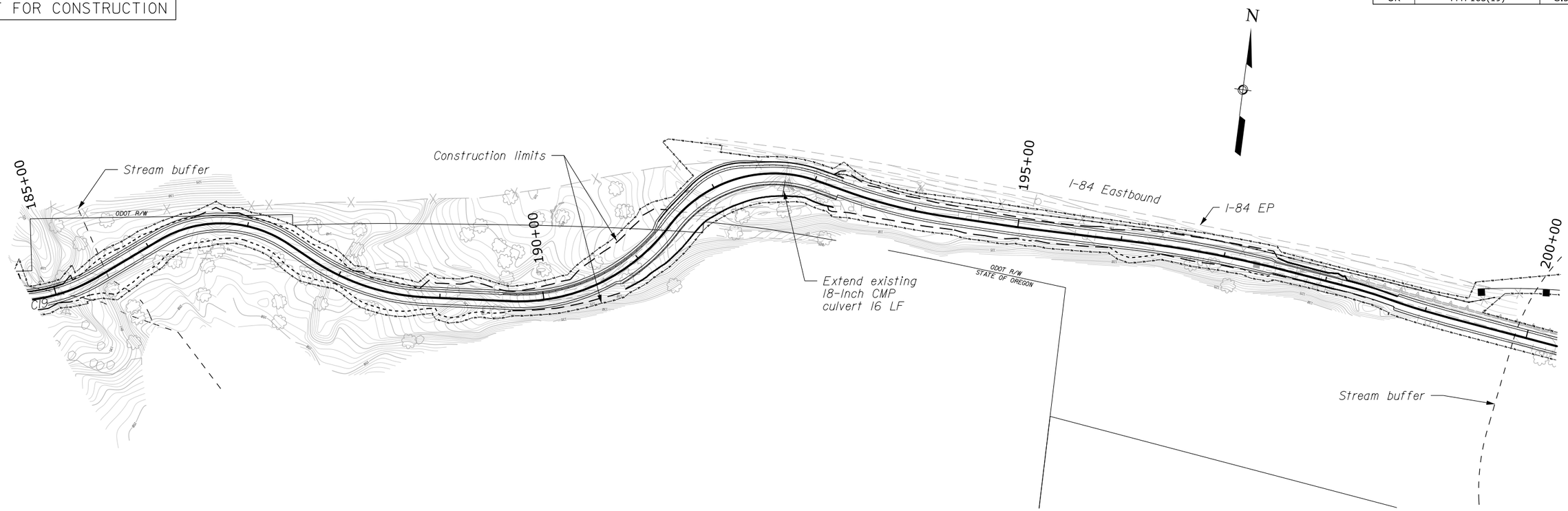

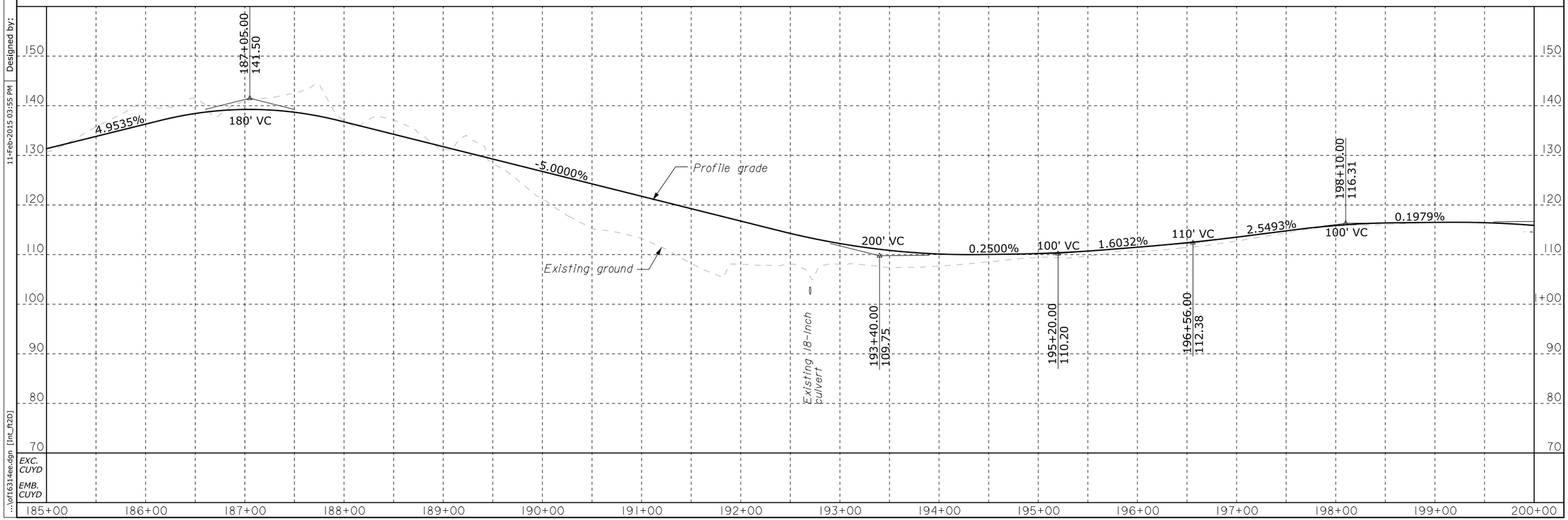

02/2015 R. Attanasio Checked by: 02/2015 K. Walters Designed by: 11-Feb-2015 03:55 PM ...\pfh163ee.dgn [int_ft2D]

STATE	PROJECT	SHEET NUMBER
OR	PFH 163(19)	G.6

PRELIMINARY
NOT FOR CONSTRUCTION

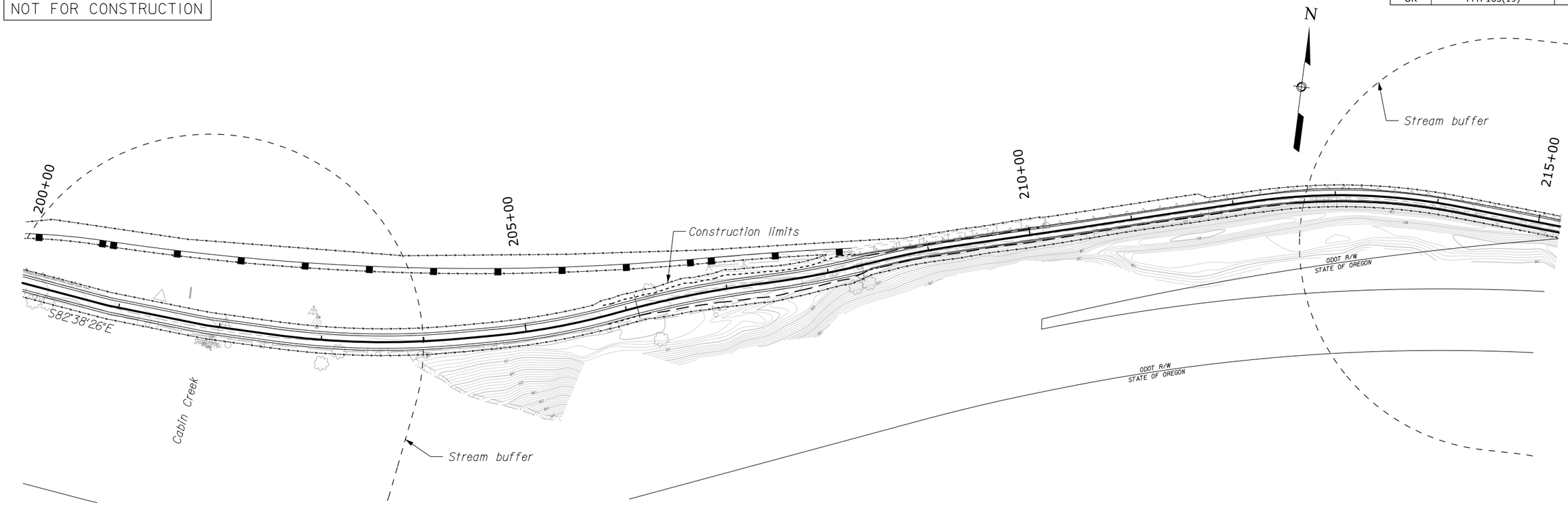

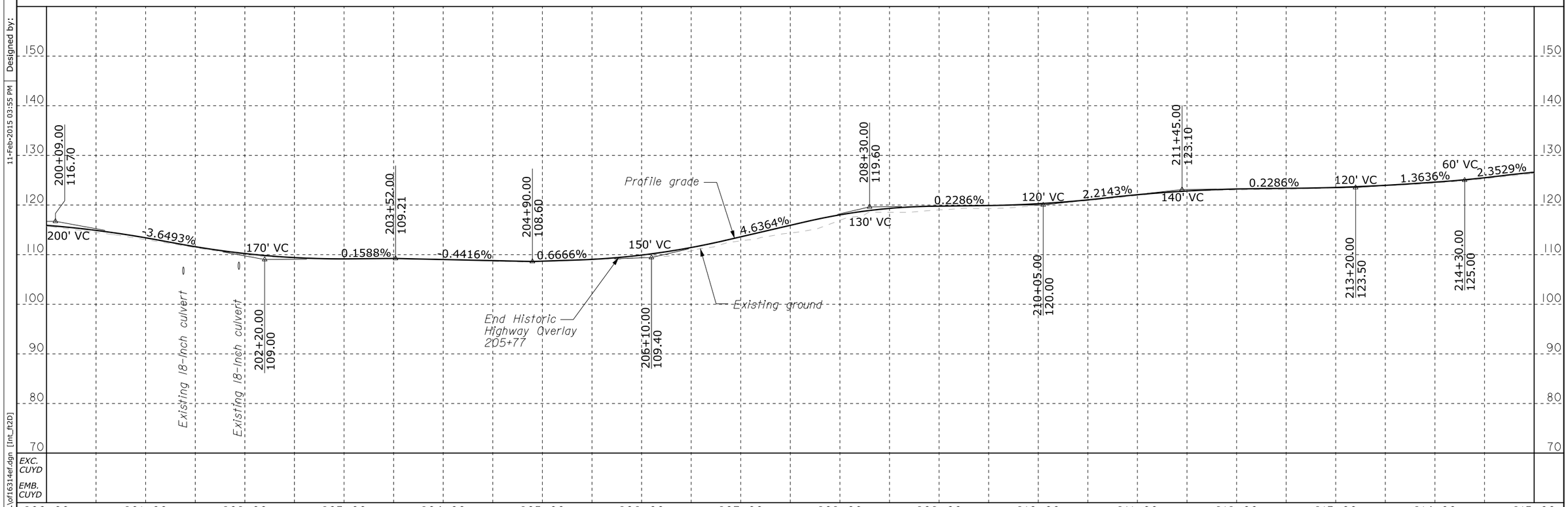

Designed by: 11-Feb-2015 03:55 PM
Checked by: K. Walters 02/2015
R. Attanasio 02/2015

...\of16314ef.dgn [Int_ft2D]

STATE	PROJECT	SHEET NUMBER
OR	PFH 163(19)	G.7

PRELIMINARY
NOT FOR CONSTRUCTION

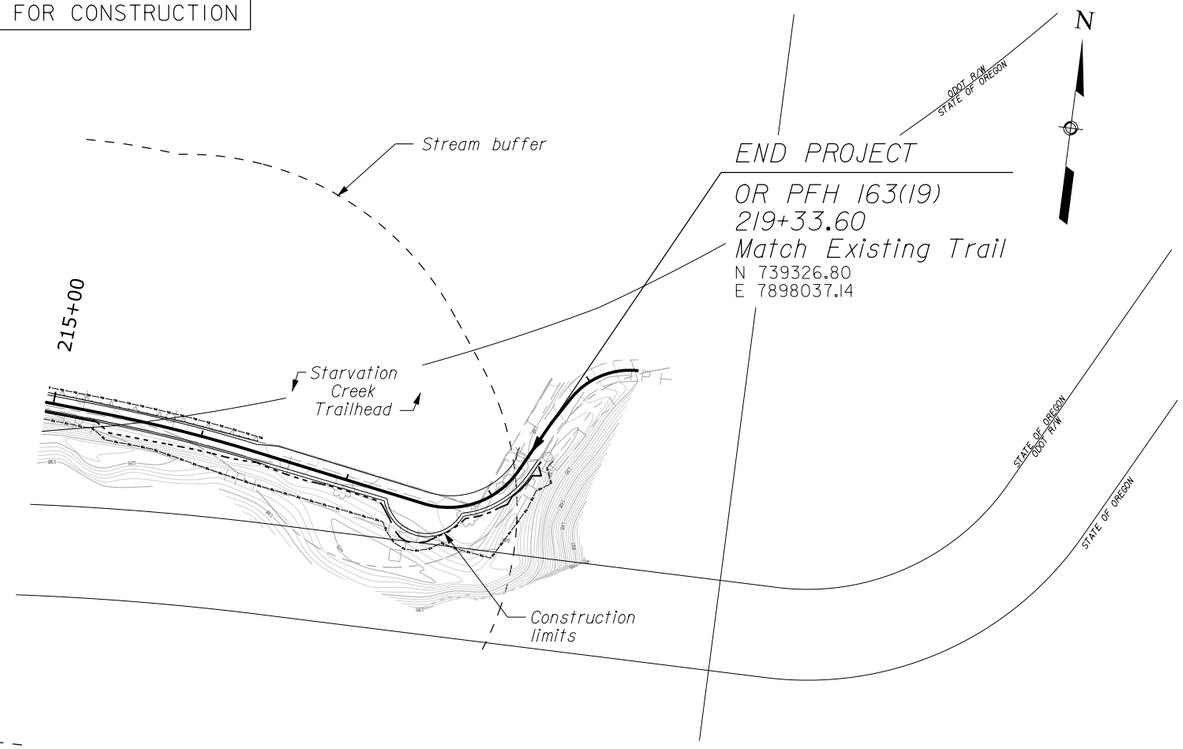

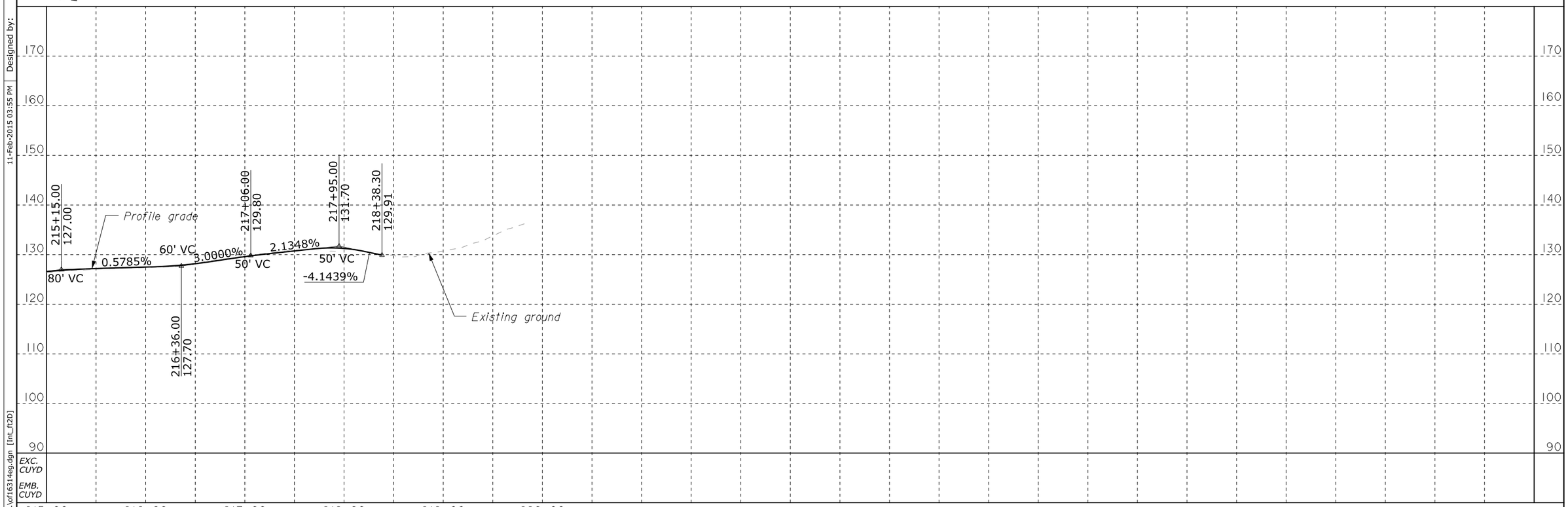

02/2015 R. Attanasio Checked by: 02/2015 K. Walters Designed by: 11-Feb-2015 03:55 PM ...\of16314eg.dgn [int_ft2D]

STATE	PROJECT	SHEET NUMBER
OR	PFH 163(19)	G.8

PRELIMINARY
NOT FOR CONSTRUCTION

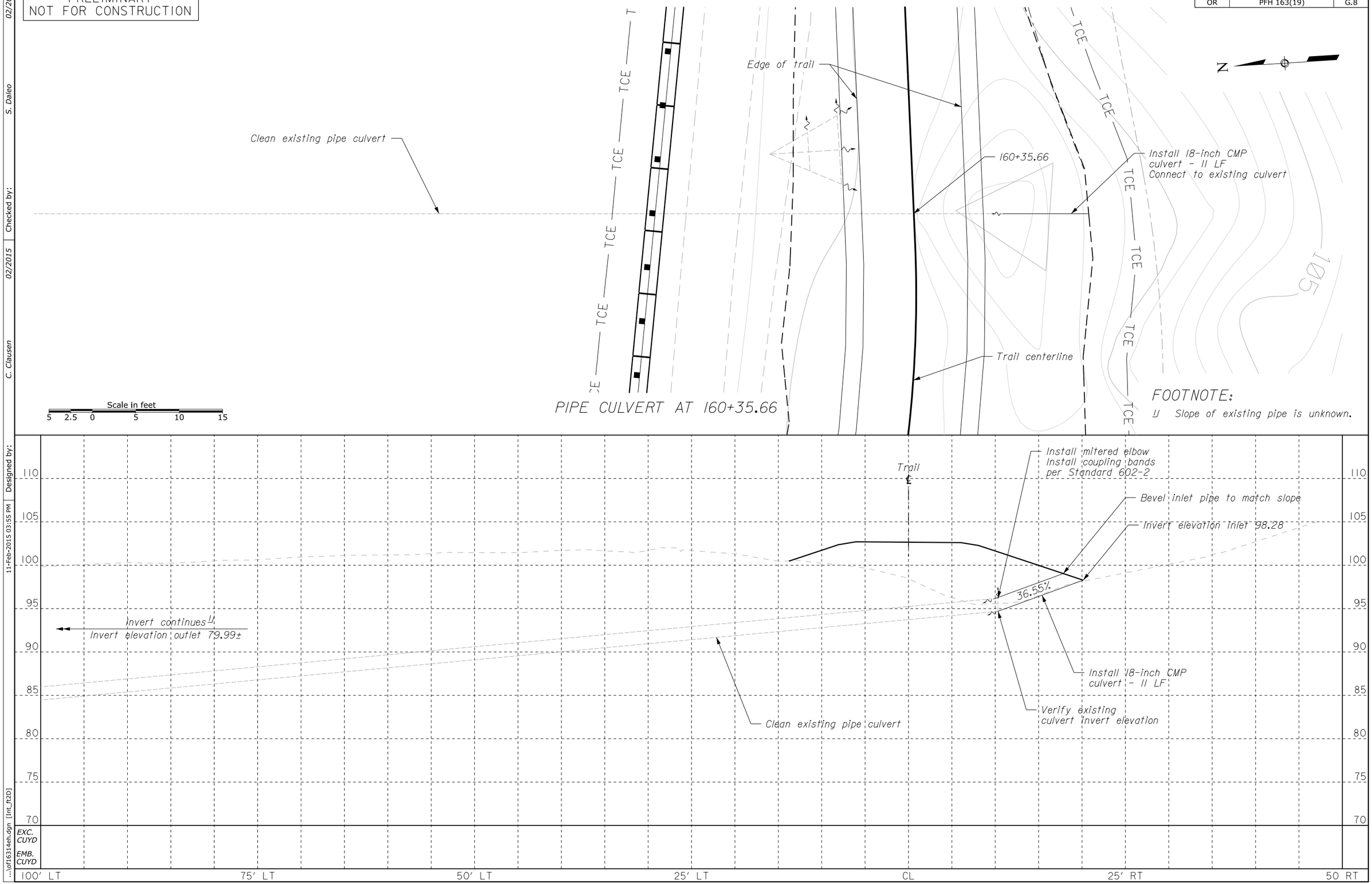

FOOTNOTE:

1/ Slope of existing pipe is unknown.

02/2015 S. Daleo Checked by: 02/2015 C. Clausen Designed by: 11-Feb-2015 03:55 PM ...\of16314eh.dgn [Int_ft2D]

PRELIMINARY
NOT FOR CONSTRUCTION

STATE	PROJECT	SHEET NUMBER
OR	PFH 163(19)	G.9

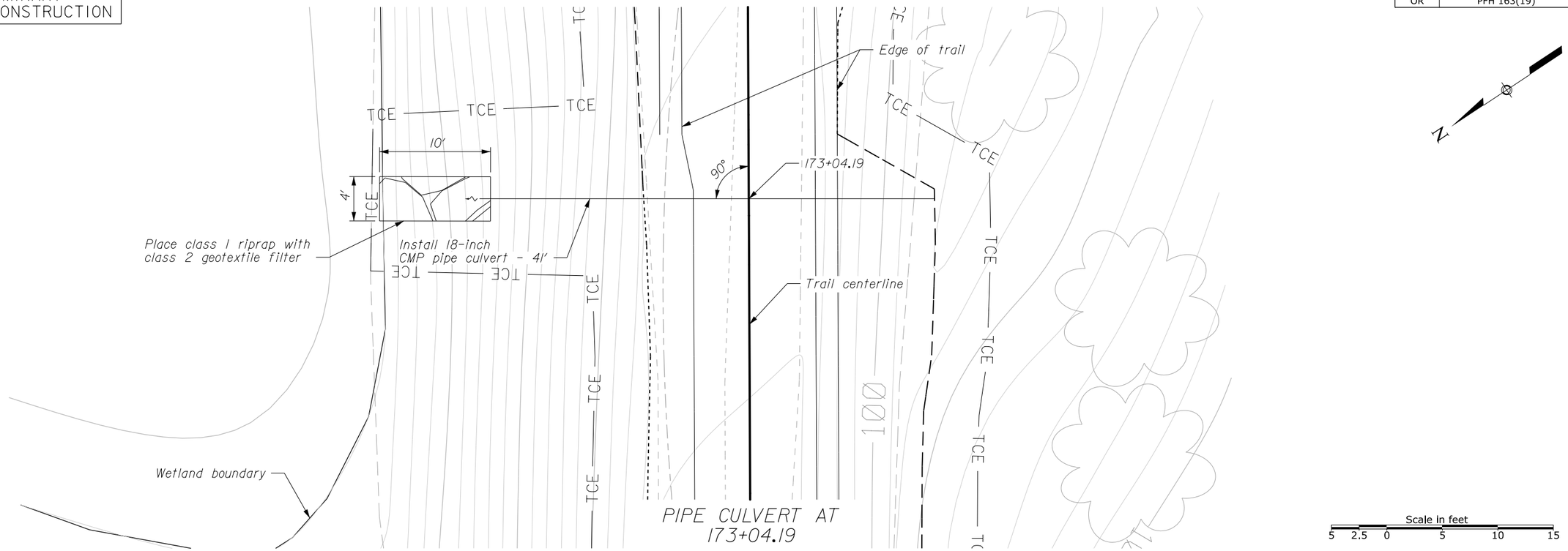

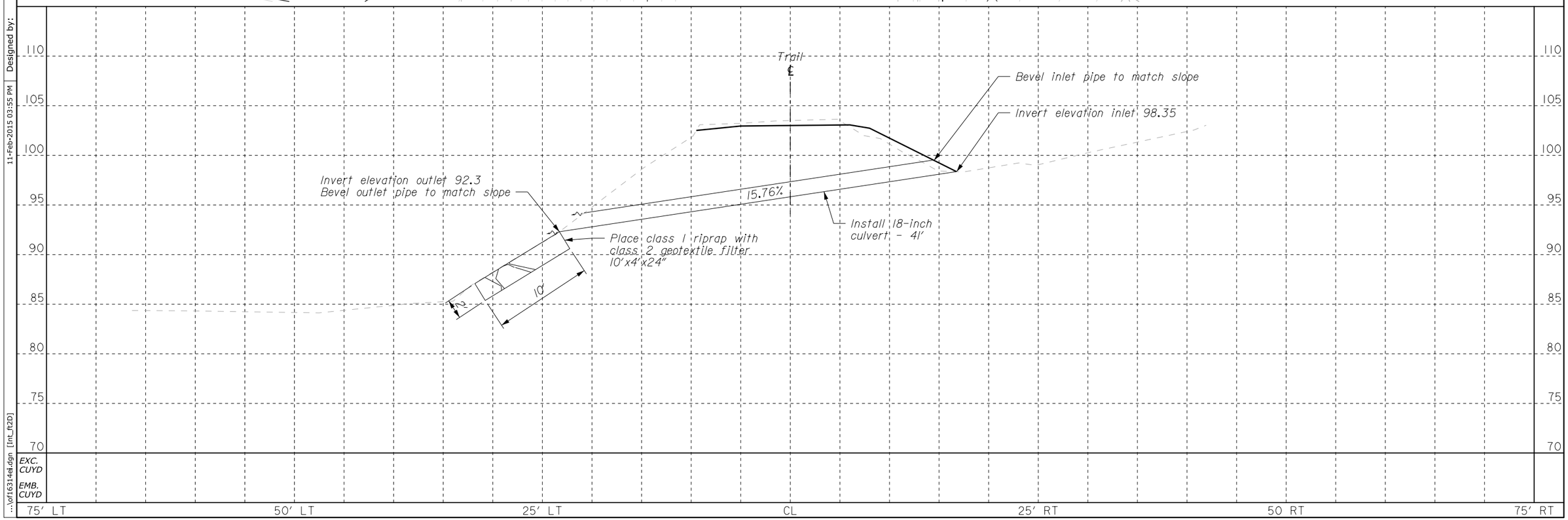

02/2015 S. Daleo Designed by:
02/2015 C. Clausen Checked by:
11-Feb-2015 03:55 PM
...\of16314ei.dgn [Int_ft2D]

STATE	PROJECT	SHEET NUMBER
OR	PFH 163(19)	G.10

PRELIMINARY
NOT FOR CONSTRUCTION

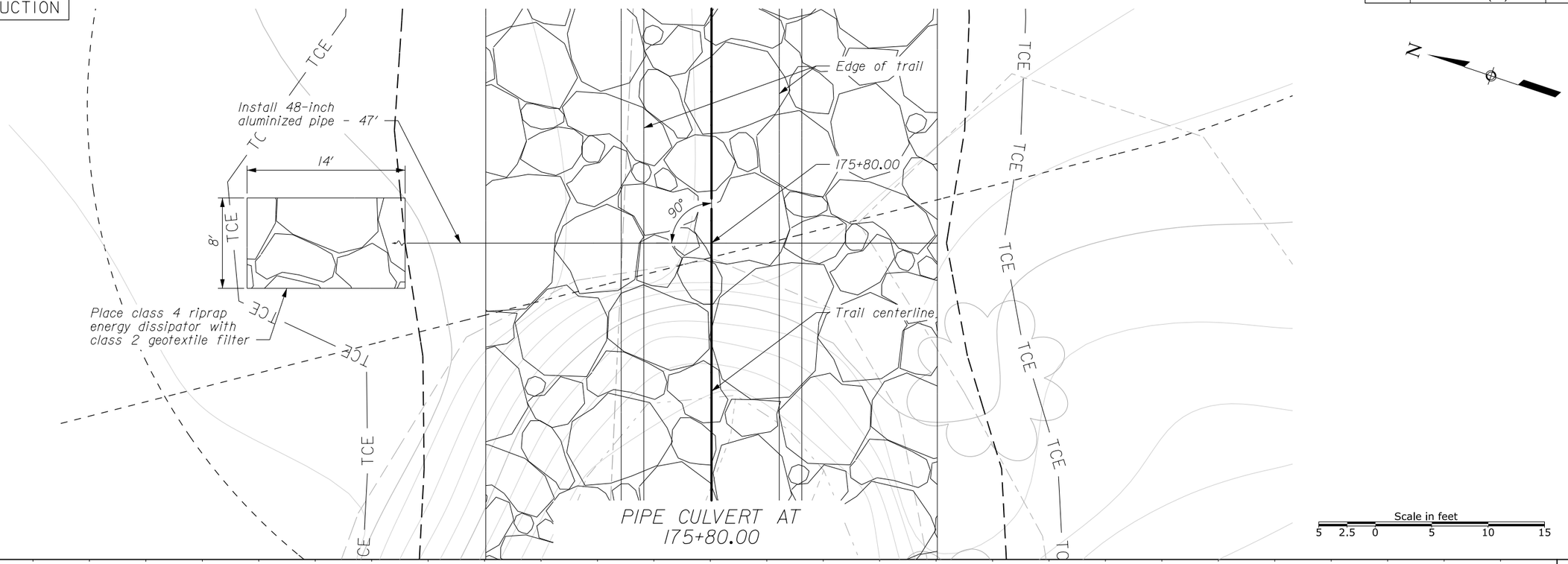

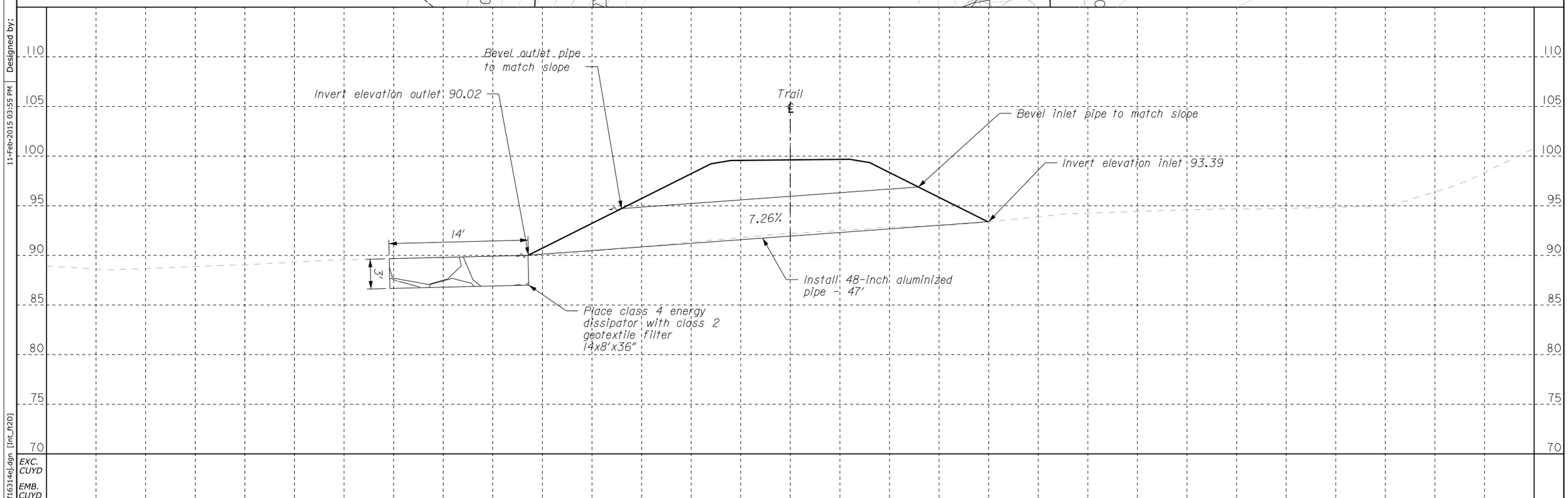

02/2015 S. Daleo Designed by:
02/2015 C. Clausen Checked by:
11-Feb-2015 03:55 PM
...\of16314ej.dgn [Int_ft2D]

STATE	PROJECT	SHEET NUMBER
OR	PFH 163(19)	G.11

PRELIMINARY
NOT FOR CONSTRUCTION

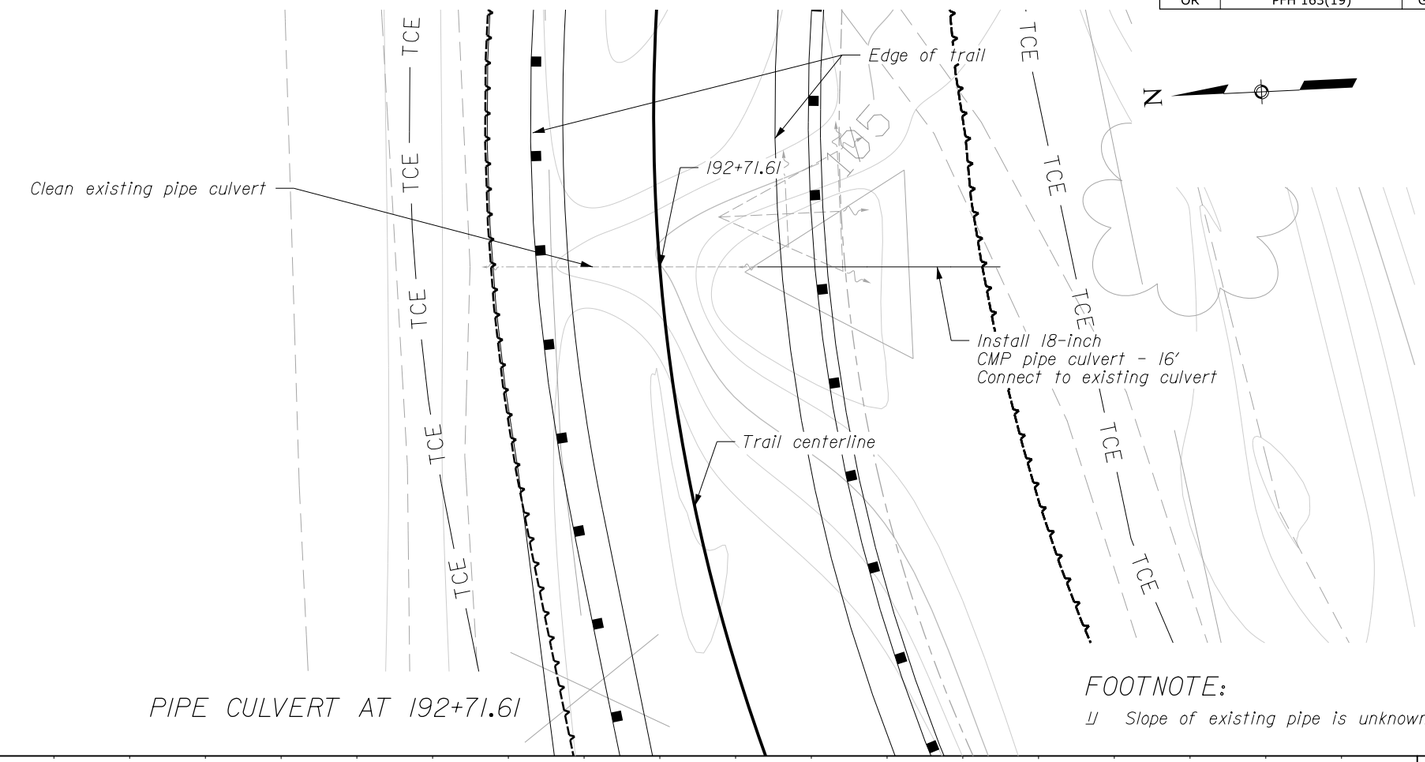

PIPE CULVERT AT 192+71.61

FOOTNOTE:

1/ Slope of existing pipe is unknown.

Scale in feet
5 2.5 0 5 10 15

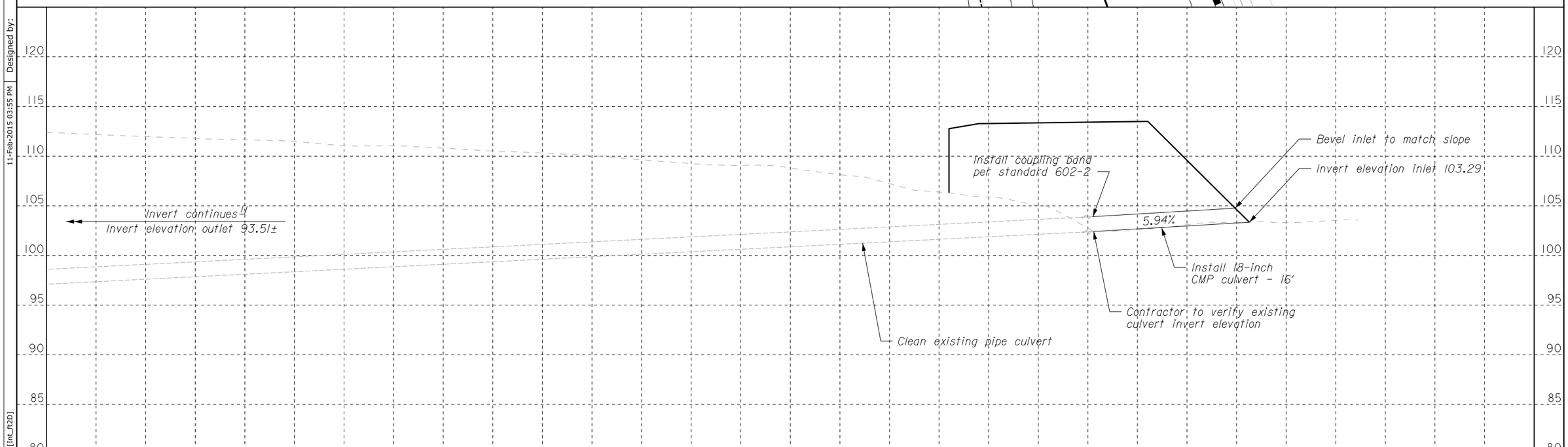

EXC. CUYD

EMB. CUYD

100' LT 75' LT 50' LT 25' LT CL 25' RT 50 RT

Designed by: S. Daleo 02/2015
Checked by: C. Clausen 02/2015
11-Feb-2015 03:55 PM [Int_ft2D]
...\of16314ek.dgn

STATE	PROJECT	SHEET NUMBER
OR	PFH 163(19)	H.1

22" BARRIER MOUNTED STEEL RAIL TABLE				
Beginning	*End*	*Lt./Rt.*	*Rail Height*	*Rail Length*
151+23	169+79	Lt.	22"	1852.00'

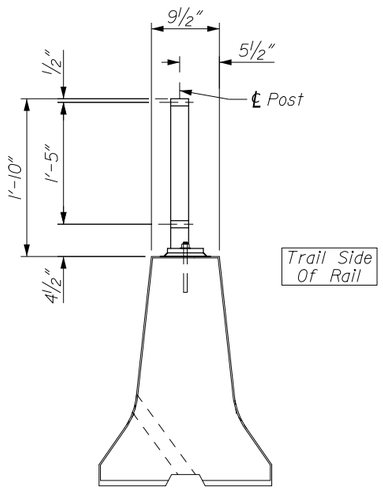

TYPICAL SECTION 1/ 2/

NOTE:

1. All members shall be stained non-reflective galvanized steel. See section 725.

FOOTNOTE:

1/ See H.11 for barrier details.

2/ See H.14 for rail details.

22" BARRIER MOUNTED STEEL RAIL

...\of16314fn.dgn [int_ft2D] 12-Feb-2015 12:21 PM Designed by: C. Clausen 02/2015 Checked by: S. Daleo 02/2015

STATE	PROJECT	SHEET NUMBER
OR	PFH 163(19)	H.2

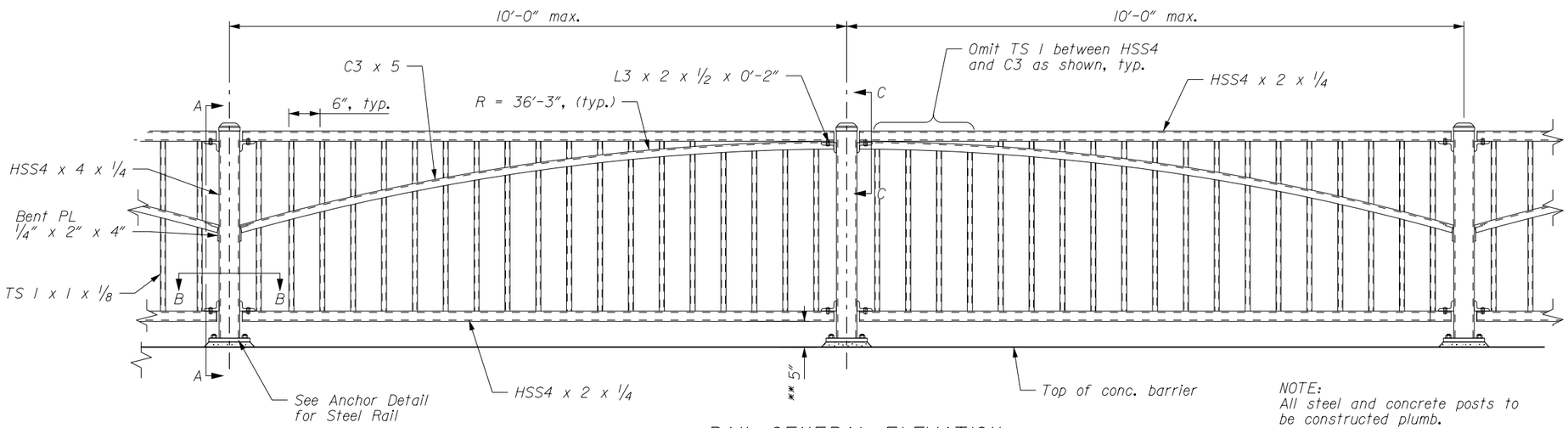

RAIL GENERAL ELEVATION

NOTE:
All steel and concrete posts to be constructed plumb.

**Increase to 6" maximum as needed where barrier grade changes between posts.

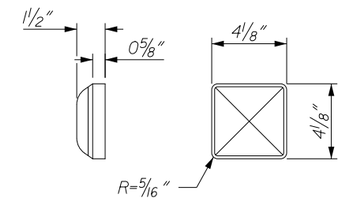

SIDE VIEW TOP VIEW

POST CAP DETAILS

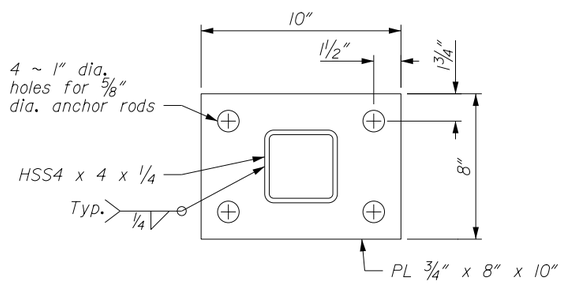

ANCHOR DETAIL FOR STEEL RAIL

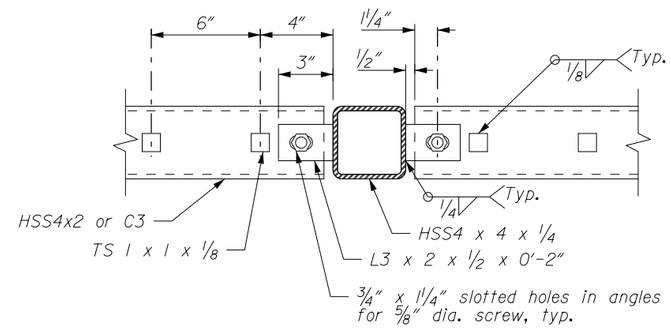

TYPICAL CONNECTION DETAIL

NOTE:

1. Provide all materials and perform all work according to the Federal Highway Administration Standard Specifications for Construction of Roads and Bridges on Federal Highway Projects, FP-14 and Supplemental Proejct Special Provisions.
2. Provide all structural steel tubing conforming to ASTM A500 Gr. B and all other structural steel conforming to AASHTO M183 (ASTM A36).
3. Concrete anchors will be 5/8" diameter high strength resin bonded anchors conforming to ASTM F1554 Gr. 36. The minimum pullout strength shall be 8,000 lbs. with a minimum embedment of 10 inches. Install anchors according to the manufacturer's directions and the SCRS.
4. All members shall be non-reflective stained galvanized steel. See Section 725.

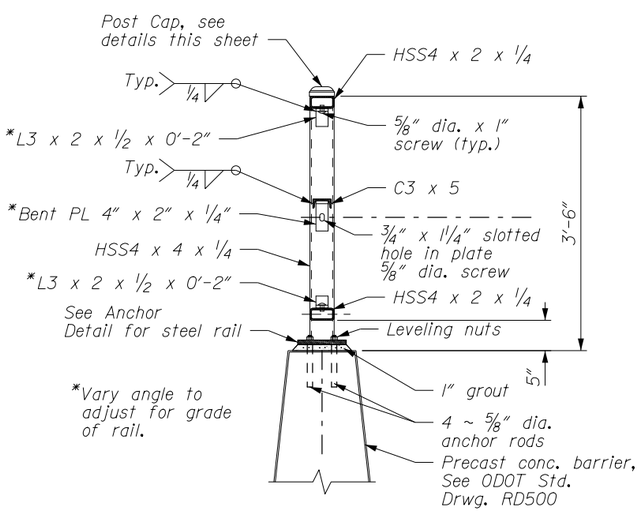

SECTION A-A

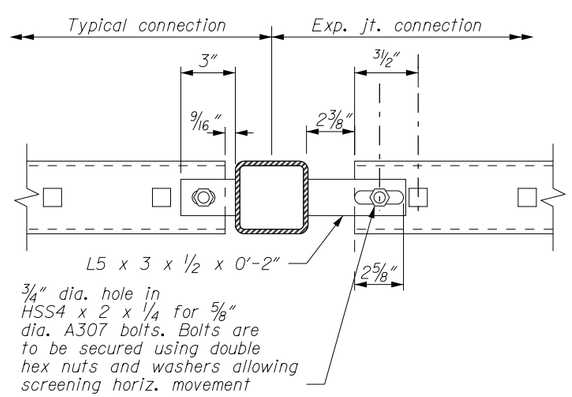

TYP. EXP. JT. CONNECTION DETAIL

SECTION B-B

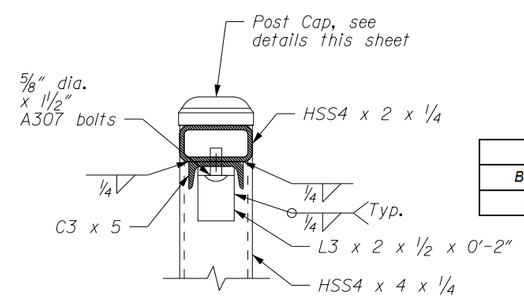

SECTION C-C

42" BARRIER MOUNTED STEEL RAIL TABLE				
Beginning	End	Lt./Rt.	Rail Height	Rail Length
208+25	216+37	Lt.	42"	815'

42" BARRIER MOUNTED STEEL RAIL

02/2015 S. Daleo Checked by: 02/2015 C. Clausen Designed by: 12-Feb-2015 12:21 PM ...\of16314fo.dgn [Int_ft2D]

STATE	PROJECT	SHEET NUMBER
OR	PFH 163(19)	H.3

42" WOOD RAIL				
Beginning	*End*	*Lt./Rt.*	*Rail Height*	*Rail Length*
189+61	193+30	Lt.	42"	376'
190+25	193+25	Rt.	42"	241'

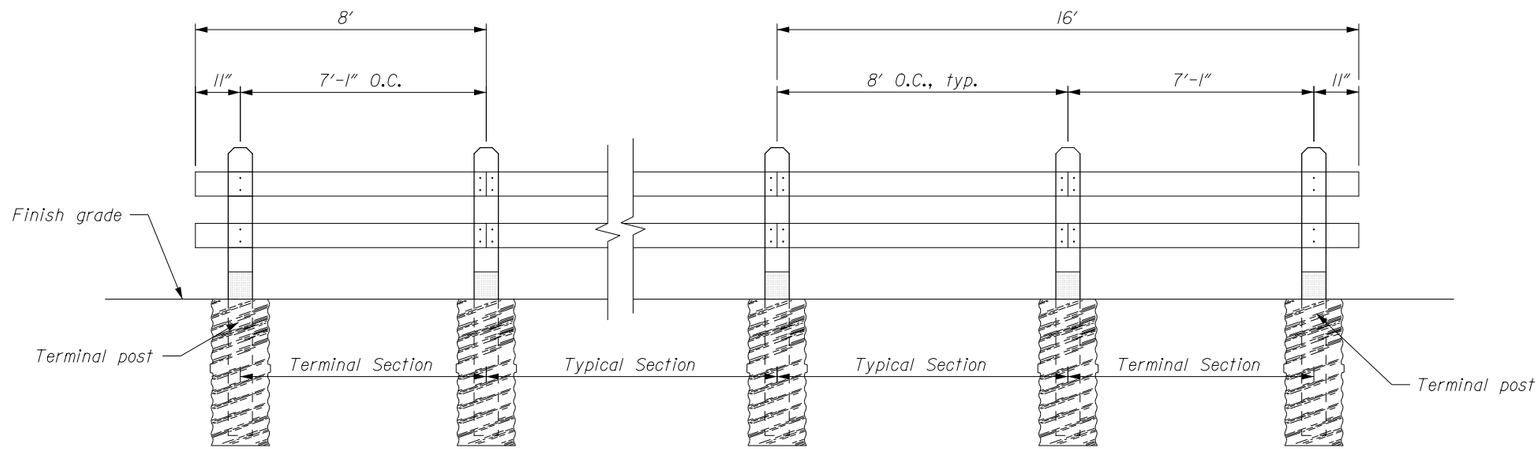

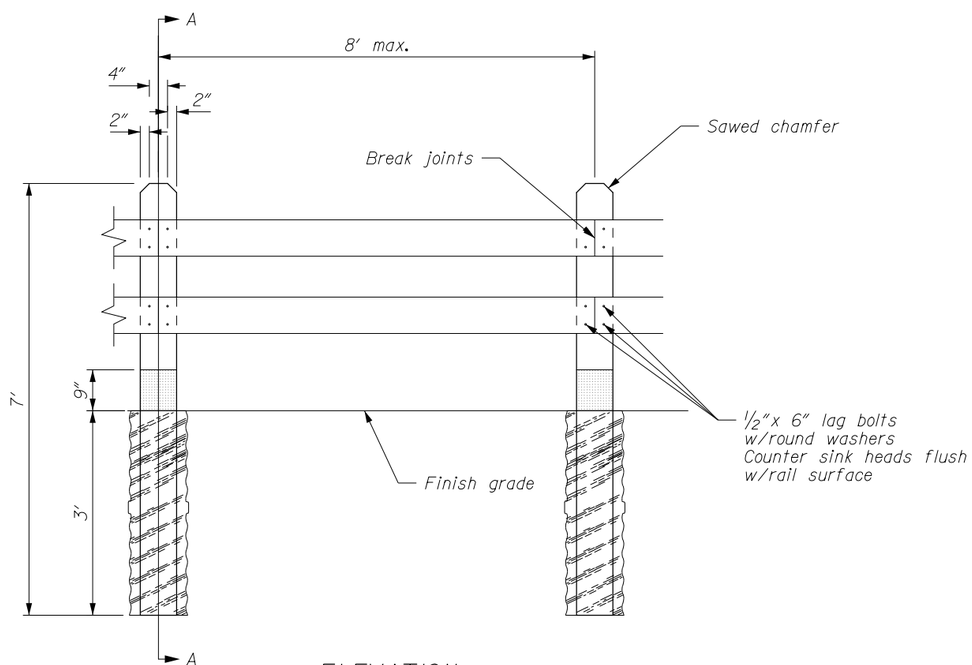

ELEVATION

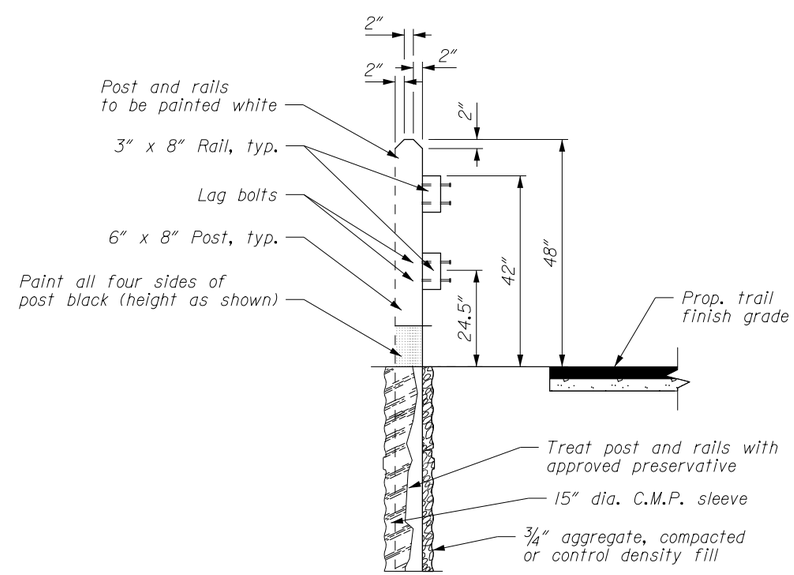

42" WOOD RAIL

02/2015 S. Daleo Checked by: 02/2015 C. Clausen Designed by: 12-Feb-2015 12:21 PM ...\of163141p.dgn [Int_ft2D]

STATE	PROJECT	SHEET NUMBER
OR	PFH 163(19)	H.4

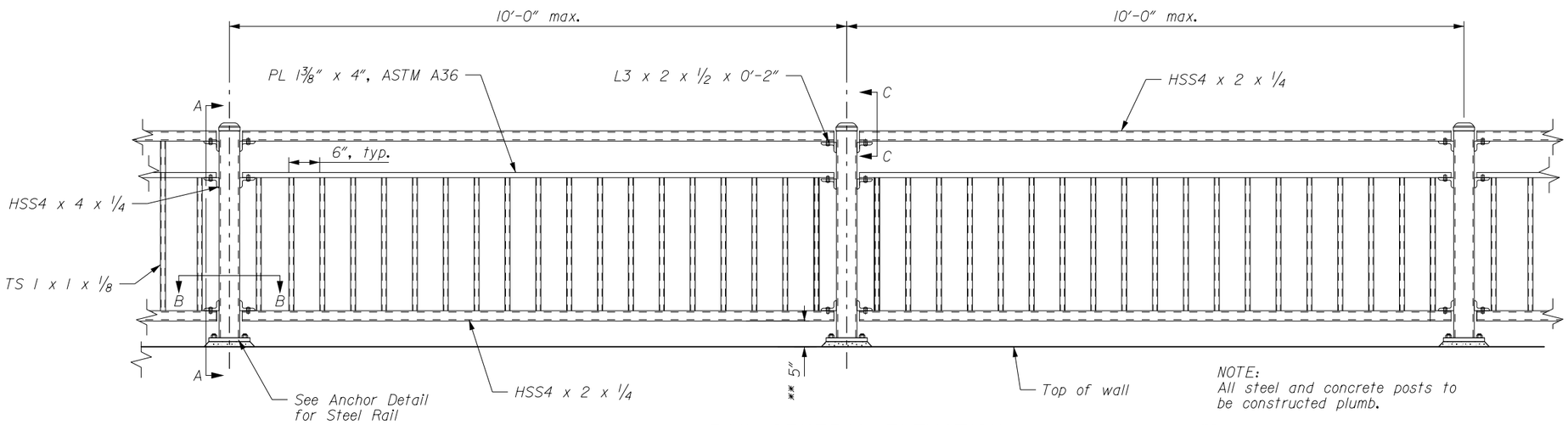

RAIL GENERAL ELEVATION

NOTE:
All steel and concrete posts to be constructed plumb.

**Increase to 6" maximum as needed where barrier grade changes between posts.

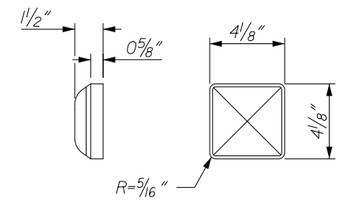

SIDE VIEW TOP VIEW

POST CAP DETAILS

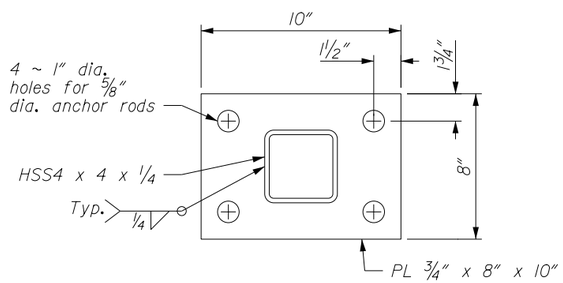

ANCHOR DETAIL FOR STEEL RAIL

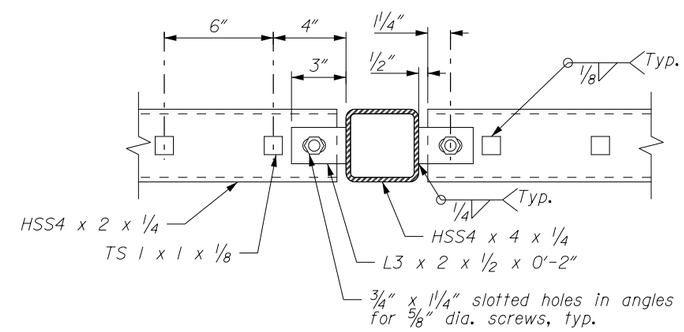

TYPICAL CONNECTION DETAIL

NOTE:

1. Provide all materials and perform all work according to the Federal Highway Administration Standard Specifications for Construction of Roads and Bridges on Federal Highway Projects, FP-14 and Supplemental Proejct Special Provisions.
2. Provide all structural steel tubing conforming to ASTM A500 Gr. B and all other structural steel conforming to AASHTO M183 (ASTM A36).
3. Concrete anchors will be 5/8" diameter high strength resin bonded anchors conforming to ASTM F1554 Gr. 36. The minimum pullout strength shall be 8,000 lbs. with a minimum embedment of 10 inches. Install anchors according to the manufacturer's directions and the SCRS.
4. All members shall be non-reflective stained galvanized steel. See Section 725.

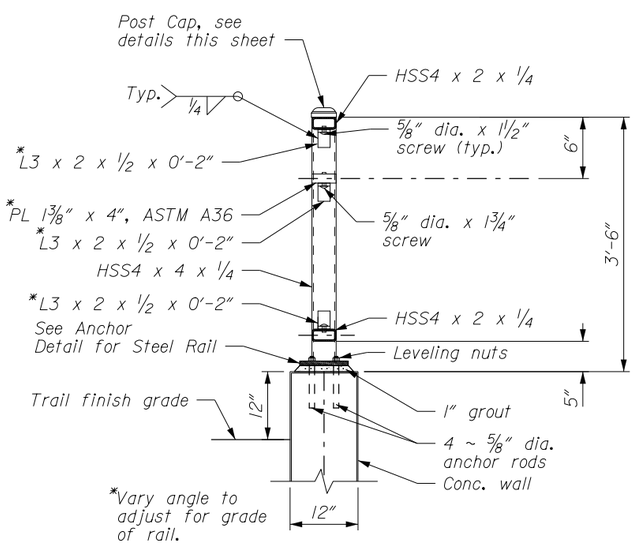

SECTION A-A

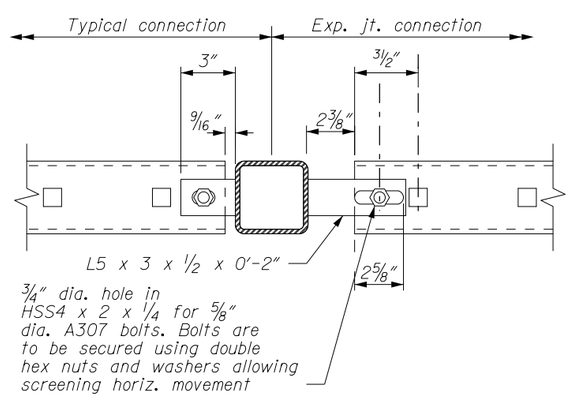

TYP. EXP. JT. CONNECTION DETAIL

SECTION B-B

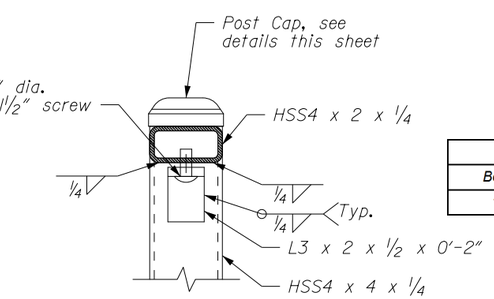

SECTION-C C

42" WALL MOUNTED STEEL RAIL TABLE				
Beginning	End	Lt./Rt.	Rail Height	Rail Length
151+88	152+80	Rt.	42"	92'

42" WALL MOUNTED STEEL RAIL

02/2015 S. Daleo Checked by: 02/2015 C. Clausen Designed by: 12-Feb-2015 12:21 PM ...\bf16314fa.dgn [Int_ft2D]

STATE	PROJECT	SHEET NUMBER
OR	PFH 163(19)	H.5

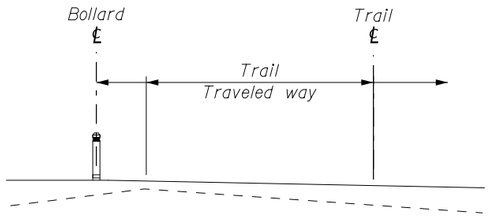

WOOD BOLLARD LAYOUT

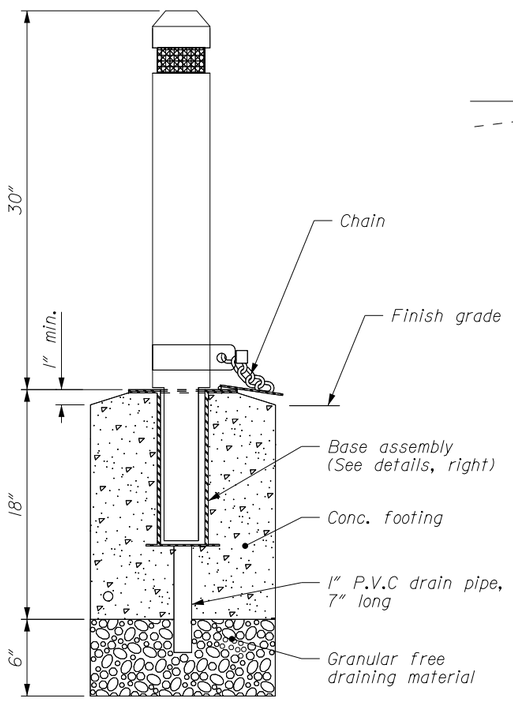

SECTION A-A

Direction of pedestrian/
bicycle traffic

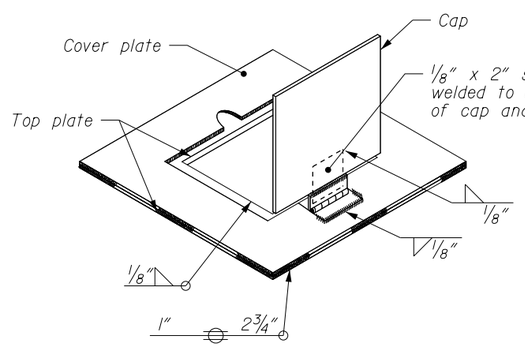

TOP PLATE

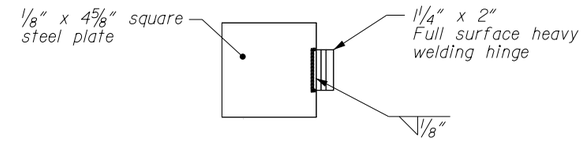

CAP & HINGE

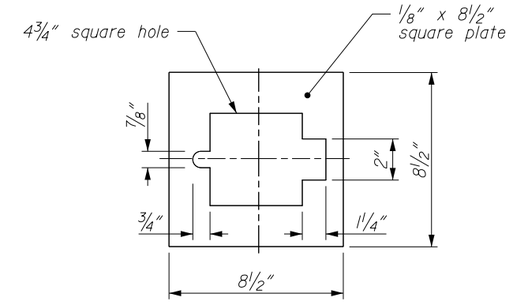

COVER PLATE

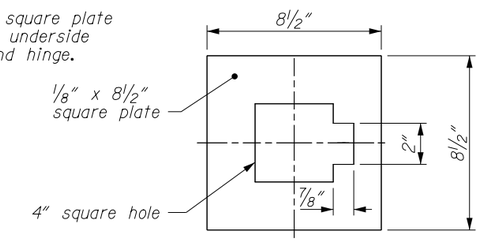

TOP PLATE

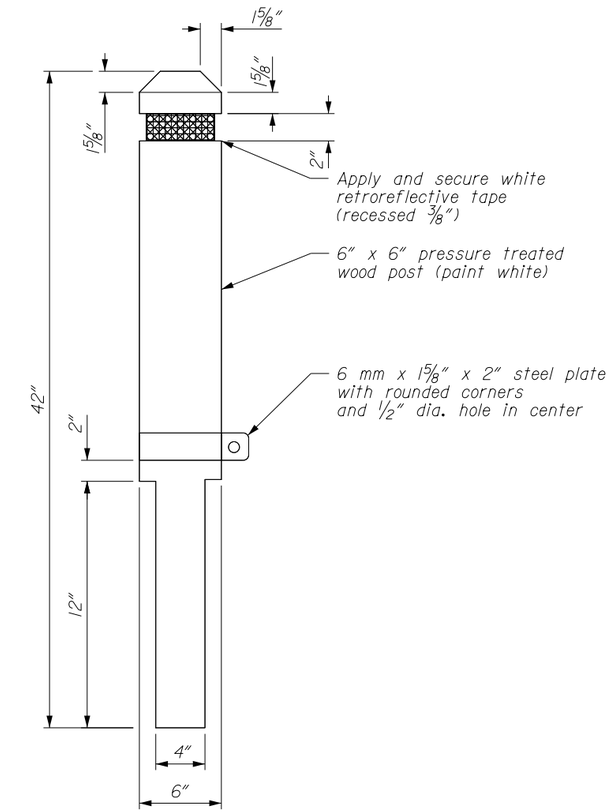

SIDE VIEW

REMOVEABLE WOOD BOLLARD

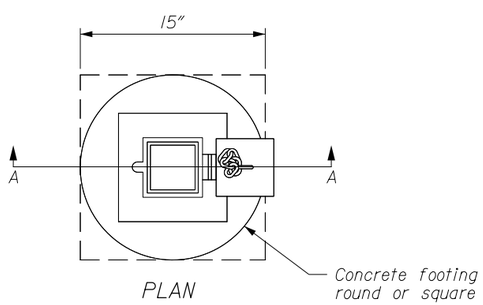

PLAN

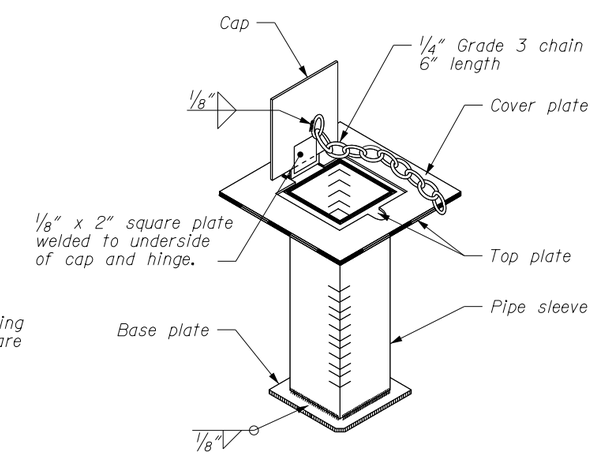

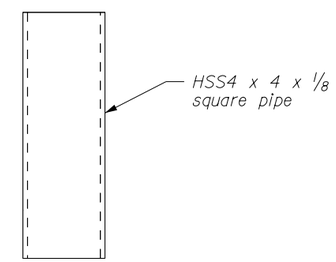

PIPE SLEEVE

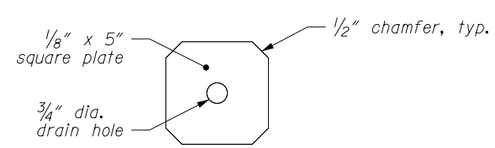

BASE SLEEVE

BASE ASSEMBLY

BOLLARD POST DETAILS

02/2015 | S. Daleo | 02/2015 | C. Clausen | 12-Feb-2015 12:22 PM | ...\of16314fr.dgn [Int_ft2D]

Checked by: | Designed by:

STATE	PROJECT	SHEET NUMBER
OR	PFH 163(19)	H.6

14-JUL-2014

rd400.dgn

NOTES:
1. Rail height measured from final paved surface at face of rail (Typ. all types).
2. Final paved surfacing to extend to face of post.
3. Drainage curb alignment same as face of guardrail.

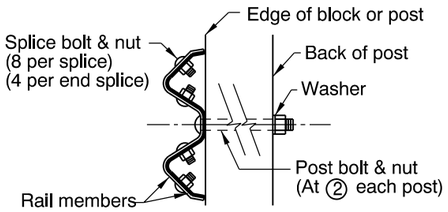

1. When required by the plans, post bolts to extend beyond the tightened nuts within limits of ¼" to ½".
2. When steel posts are used see "APPURTENANCES" for modified bolt detail, Std. Drg. RD415.
3. All post bolt threads to be set after assembly for wrench removal only.

FITTINGS

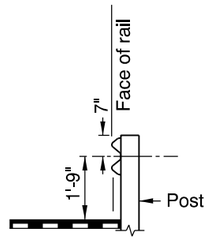

TYPE 1
(Use restricted to non-roadway applications)

GUARDRAIL

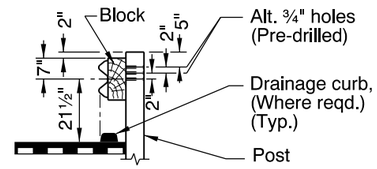

INITIAL INSTALLATION

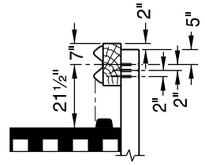

FUTURE ADJUSTMENT

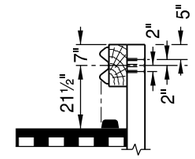

ALTERNATE
INITIAL INSTALLATION
OR FUTURE ADJUSTMENT

TYPES 2A & 3
(See General Note 3)
(For Type 3 use double thickness (2) rail elements)

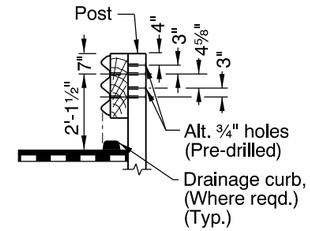

INITIAL INSTALLATION

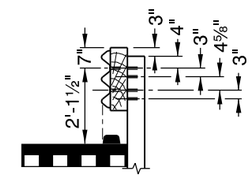

RAIL AFTER OVERLAY
(Adjust as shown)
TYPE 4

ASSEMBLY DETAILS

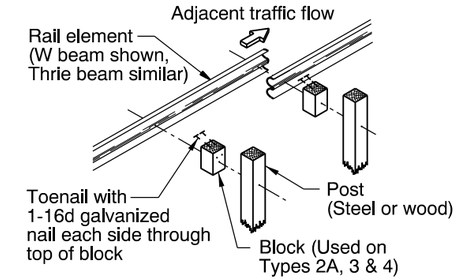

RELATION OF PARTS

TABLE OF POST SPACING				
TYPE	1	2A	3	4
SPACING	12'-6"	6'-3"	3'-1½"	6'-3"

NORMAL RAIL ELEMENT DATA			
Type	Rail	Effective Lengths	Thkn. *
1, 2A, 3	W beam	6.25', 12.5', 25'	0.105" & 0.135"
4	Thrie beam	6.25', 12.5', 25'	0.105" & 0.135"

* Base metal thkn. nom. (Before galv.)

METAL MEDIAN BARRIER

NOTE:
Median barrier post spacing 6'-3".
See end construction for variations.

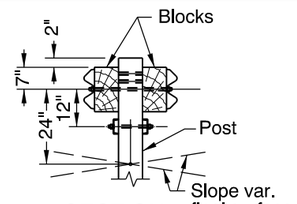

SECTION
(See "Guardrail" details and general note 3)

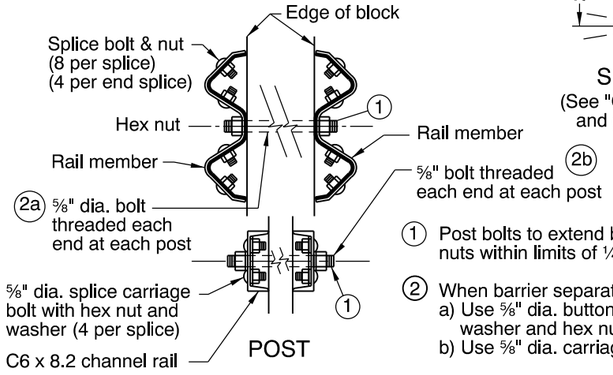

POST

① Post bolts to extend beyond the tightened nuts within limits of ¼" to ½".

② When barrier separates to double post mounting:
a) Use ⅝" dia. button or alternate bolt with washer and hex nut.
b) Use ⅝" dia. carriage bolt with washer and nut.

CHANNEL RAIL AND SPLICE PLATE
(METAL MEDIAN BARRIER)

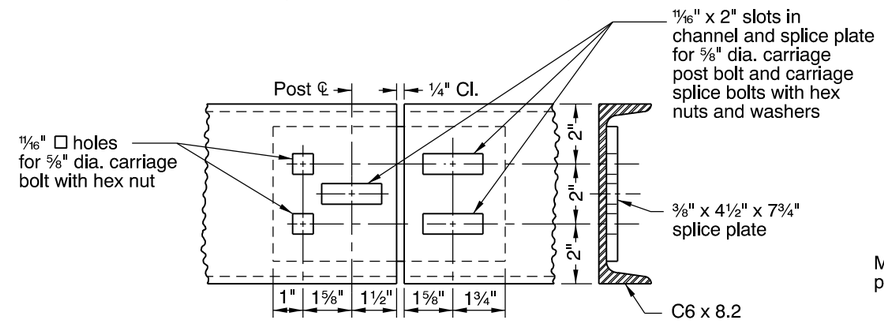

NOTE:
Clearance to be 1⁹⁄₁₆" at rail splice for bridge expansion joints.

ASSEMBLY DETAILS

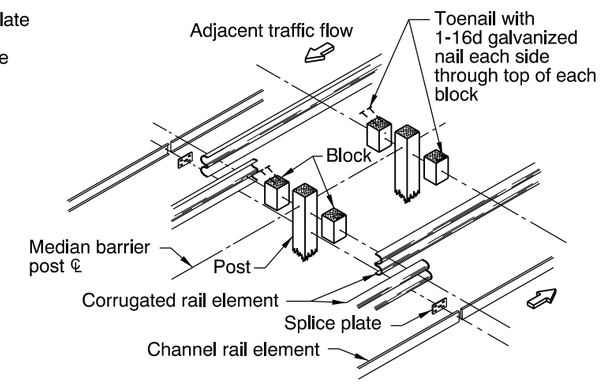

RELATION OF PARTS

METAL MEDIAN BARRIER/SHOULDER GUARDRAIL INSTALLATION AT BRIDGE DECK EXPANSION JOINT

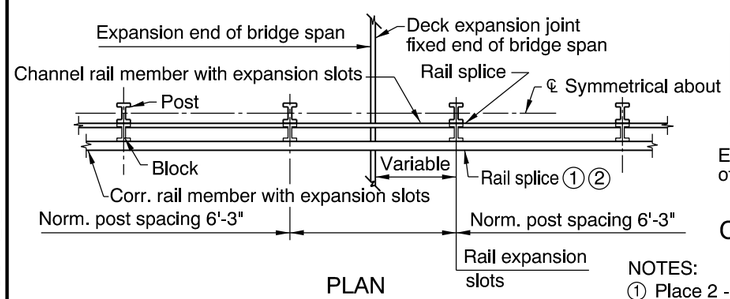

PLAN

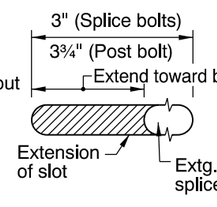

CORRUGATED RAIL

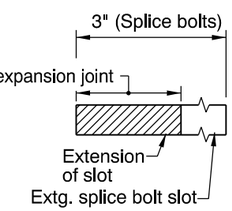

CHANNEL RAIL AND
SPLICE PLATE

NOTES:
① Place 2 - 1⁄32" polytetrafluoroethylene (TFE) sheets between corrugated rail members. The sheets shall be 12½" x 1'-7".

② Adjust nuts to provide a sliding fit and set threads to prevent loosening.

GENERAL NOTES FOR ALL DETAILS:

1. For details of parts, see Std. Drgs. RD405, RD410 & RD415.
2. For details of guardrail installation, see Std. Drgs. RD420, RD425, RD430, RD435 & RD440.
3. Use "Alternate Initial Installation", at bridge ends (See Std. Drg. RD440), adjacent to P.C.C. pvmt., for temporary guardrail, to match existing guardrail, for Type 1 rail or as directed.
4. See Std. Drg. RD701 for drainage curbs, where required.
5. Lap guardrail in direction of adjacent traffic.

CALC. BOOK NO. N/A

BASELINE REPORT DATE 13-JAN-2014

NOTE: All material and workmanship shall be in accordance with the current Oregon Standard Specifications

The selection and use of this Standard Drawing, while designed in accordance with generally accepted engineering principles and practices, is the sole responsibility of the user and should not be used without consulting a Registered Professional Engineer.

OREGON STANDARD DRAWINGS

GUARDRAIL AND METAL MEDIAN BARRIER

2015

DATE	REVISION DESCRIPTION

RD400

Effective Date: February 1, 2015 - May 31, 2015

POSTS

STEEL

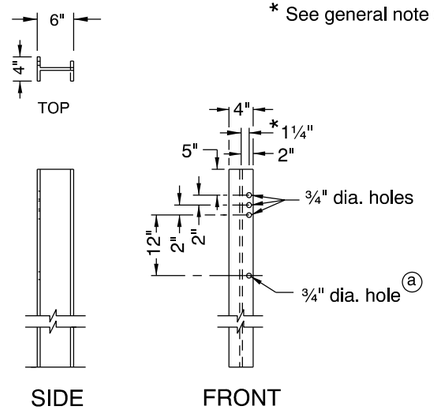

TYPE 2A, 3 OR METAL MEDIAN BARRIER

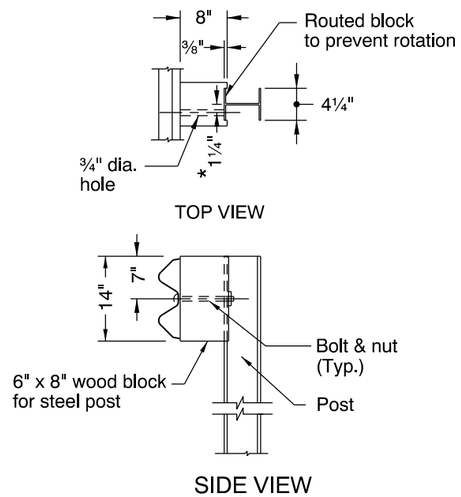

TYPE 2A, 3 OR METAL MEDIAN BARRIER
WOOD BLOCK FOR STEEL POST

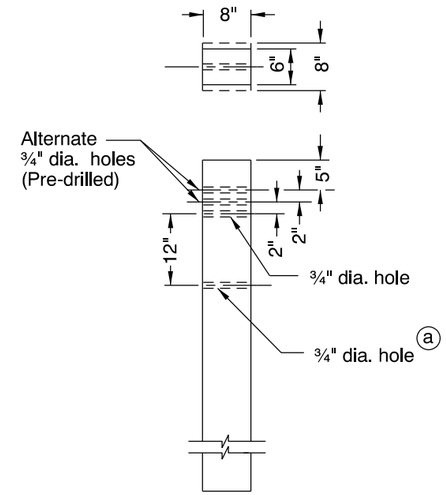

TYPE 1, 2A, 3 OR
METAL MEDIAN BARRIER

WOOD

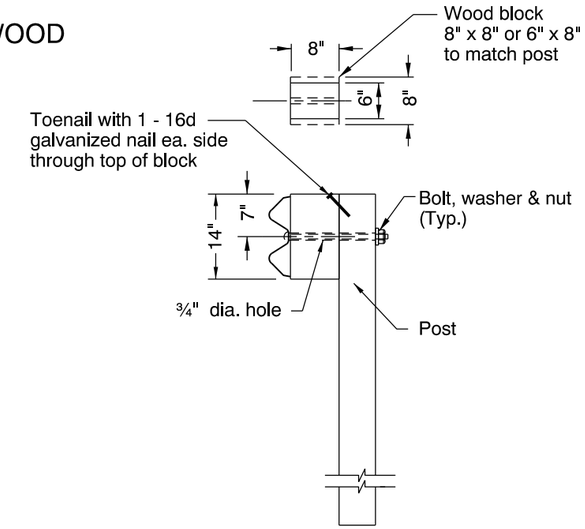

TYPE 2A, 3 OR
METAL MEDIAN BARRIER

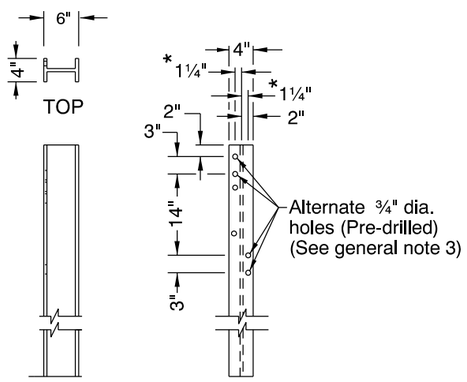

TYPE 4 OR TYPE 4 (TRANSITION) POST

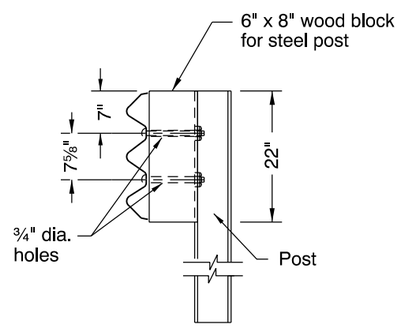

TYPE 4 OR TYPE 4 (TRANSITION) BLOCK
(Routing not required)

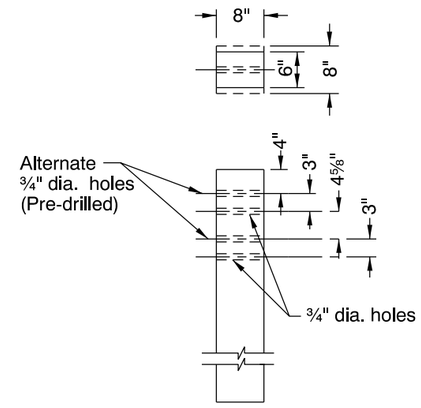

TYPE 4 OR TYPE 4 (TRANSITION)
POST

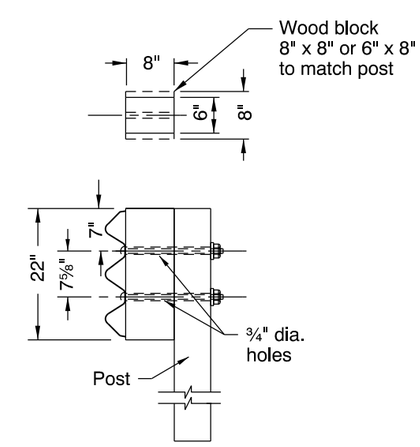

TYPE 4 OR TYPE 4 (TRANSITION) BLOCK

ⓐ Lowest hole(s) required only where channel rail is to be installed. Drill 12" below top ¾" hole(s) used. (See general note 4)

GUARDRAIL POST TABLE				
GUARDRAIL TYPE	POST SIZE		POST LENGTH	
	WOOD	STEEL *	WOOD	STEEL
1	6" x 8" or 8" x 8"	—	6'-0"	—
2A	6" x 8" or 8" x 8"	W6 x 9	6'-0"	6'-6"
3	8" x 8"	W6 x 9	6'-0"	6'-6"
Metal median barrier	8" x 8"	W6 x 9	6' 6"	6'-6"
4	6" x 8" or 8" x 8"	W6 x 9	7'-0"	7'-0"
4 (Transition)	8" x 8"	W6 x 9	6'-0"	6'-9"

GENERAL NOTES FOR ALL DETAILS:

1. See Std. Drg. RD400 for alternate hole useage requirements.
2. For assembly, installation, and appurtenance details, see Std. Drgs. RD400, RD410, RD415, RD420, RD425, RD430, RD435, RD440.
3. See Bridge Drgs. for bridge transition guardrail post & block requirements. Multiple holes are not required in bridge transition rail posts.
4. Posts and blocks to be pre-drilled for the intended guardrail installation.
5. Post and block dimensions are nominal.
6. Steel posts are shifted to accomodate bolt holes.

The selection and use of this Standard Drawing, while designed in accordance with generally accepted engineering principles and practices, is the sole responsibility of the user and should not be used without consulting a Registered Professional Engineer.

CALC. BOOK NO. N/A

BASELINE REPORT DATE 13-JAN-2014

NOTE: All material and workmanship shall be in accordance with the current Oregon Standard Specifications

OREGON STANDARD DRAWINGS

GUARDRAIL AND METAL MEDIAN BARRIER PARTS

2015

DATE	REVISION DESCRIPTION

RAIL MEMBERS

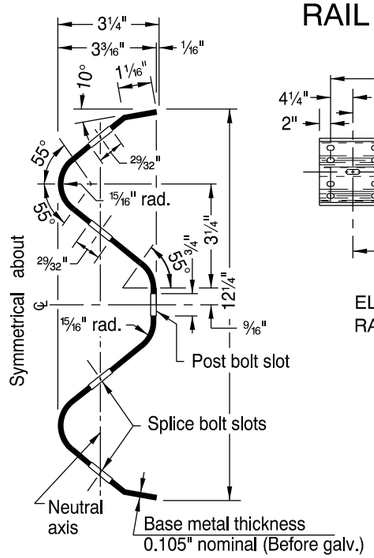

SECTION THRU RAIL ELEMENT

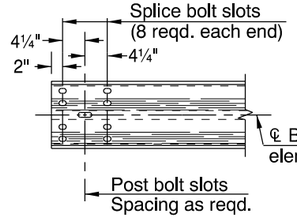

ELEVATION OF RAIL ELEMENT

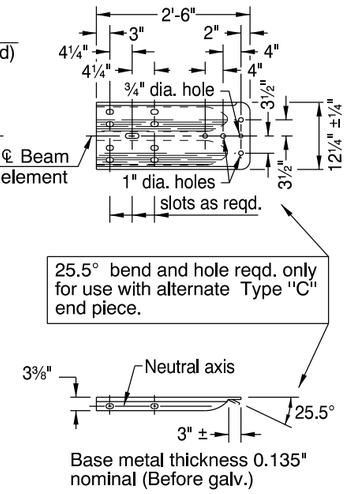

TERMINAL CONNECTOR

APPURTENANCES

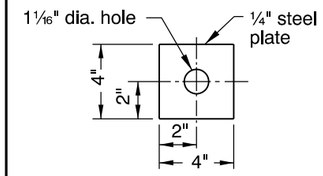

SNOW LOAD (OPTIONAL)
(In area of heavy snow, as directed by the engineer)

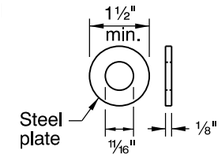

PLAIN ③

USE ON BACK OF POST

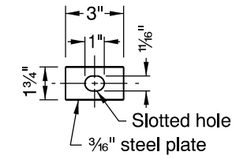

RECTANGULAR

USE ON RAIL ELEMENT FACE ON TYPE C END PIECE ④

WASHERS

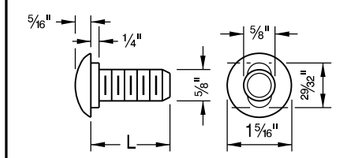

ALTERNATIVE No. 1

ALTERNATIVE NO. 2

L (in.)	Thread Length
1¼	Full length
2	1½" min.
9½	2" min.
18	3½" min.
25	3" min.

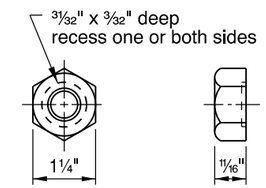

POST OR SPLICE BOLT AND NUT

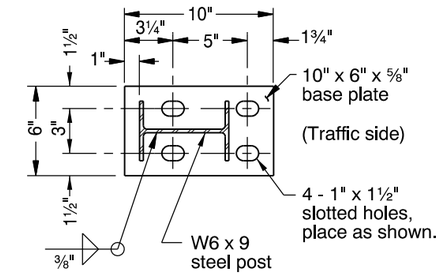

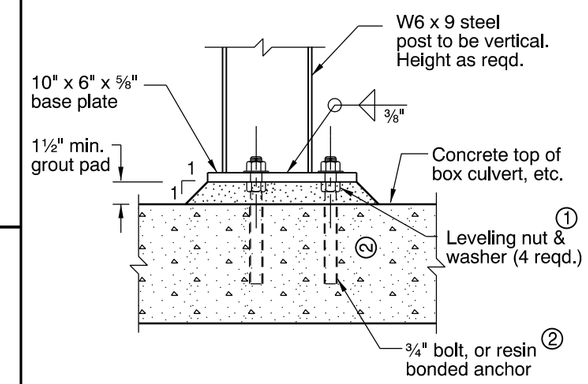

BASE PLATE DETAILS
(For additional details, see Std. Drg. BR266)
(Use when depth of cover is less than normal for post installation.)

NOTES:

1. For guardrail installed on radii of 150' or less (5' min. radius) use rail elements pre-curved to industry standard. Install "Radius Identification Plate" (See detail right).
2. Effective length of rail sections shall be 12'-6".

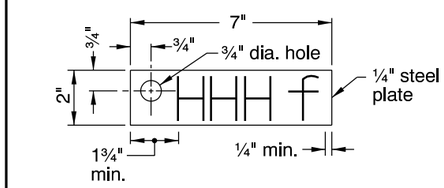

RADIUS IDENTIFICATION PLATE
(See general note 4)

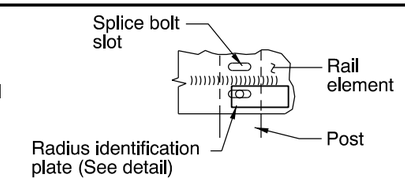

RADIUS IDENTIFICATION PLATE MOUNTING DETAIL
(See general note 5)

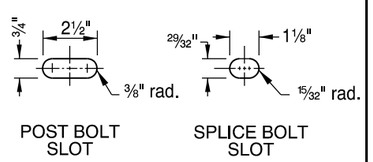

POST BOLT SLOT

SPLICE BOLT SLOT

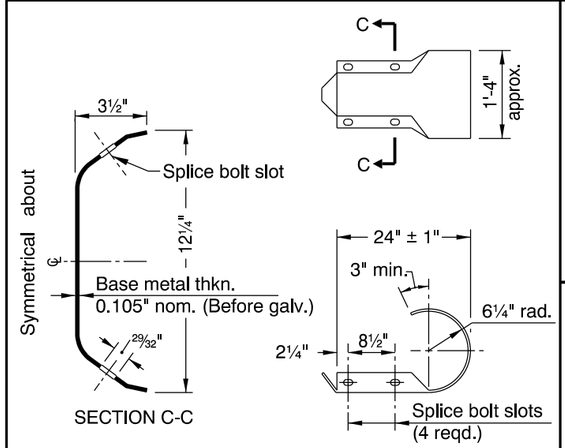

SECTION C-C

TYPE B END PIECE

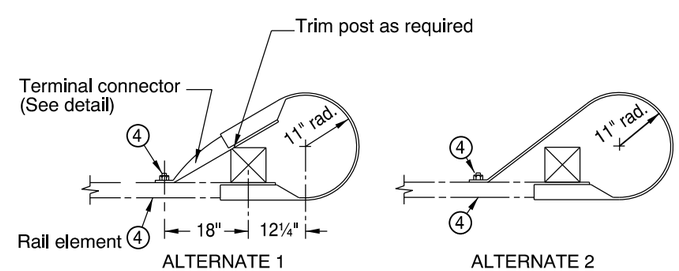

ALTERNATE 1

ALTERNATE 2

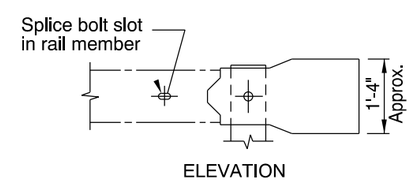

ELEVATION

TYPE C END PIECE
(For details not shown, see Type B End Piece)

NOTES:

① Furnished & installed by structure contractor when shown on structure plans.

② 6" min. penetration into concrete slabs other than bridge decks. Cast in place or core and install using approved resin bonding system.

③ Not required if "Snow Load" washer option is used.

④ Use rectangular washer under bolt head and nut on Type C End Piece as shown.

GENERAL NOTES FOR ALL DETAILS:

1. For assembly and installation details, see Std. Drgs. RD400, RD405, RD420, RD425, RD430, RD435 & RD440.
2. For details of guardrail connections to structural handrails, see special details or Standard Drawings as called for on plans.
3. All indicated welds shall attain the full strength of the section welded.
4. Radius dimensions, in feet to the nearest 0.5 foot, shall be placed on the plate with a raised weld bead replacing the letters "HHH", shown on the Radius Identification Plate detail. Digits shall be 1½" min. height and ¾" max. width. Plate shall be galvanized after placement of digits.
5. The guardrail radius identification plate is to be mounted on the back side of the rail element with the lowest splice bolt nearest the P.C. of the guardrail radius.

CALC. BOOK NO. N/A

BASELINE REPORT DATE 14-JAN-2010

NOTE: All material and workmanship shall be in accordance with the current Oregon Standard Specifications

The selection and use of this Standard Drawing, while designed in accordance with generally accepted engineering principles and practices, is the sole responsibility of the user and should not be used without consulting a Registered Professional Engineer.

OREGON STANDARD DRAWINGS

GUARDRAIL AND METAL MEDIAN BARRIER PARTS

2015

DATE	REVISION DESCRIPTION

rd415.dgn 14-JUL-2014

RD415

Effective Date: February 1, 2015 - May 31, 2015

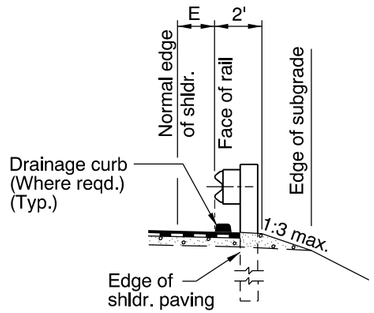

SECTION A-A

NOTES:
1. E = 2', where shown on plans.
2. Drainage curb alignment same as face of guardrail.

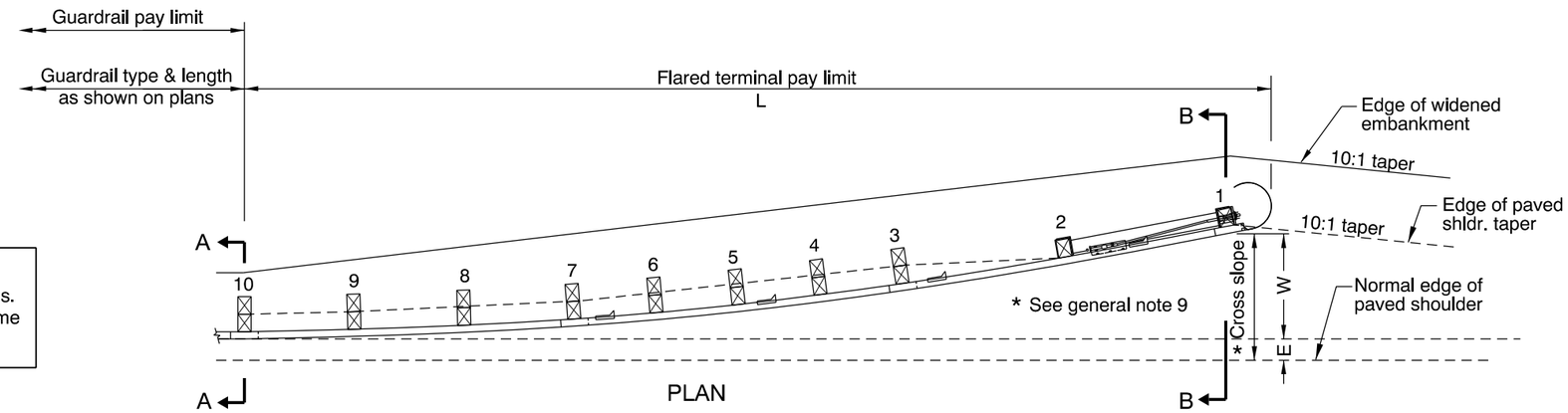

PLAN

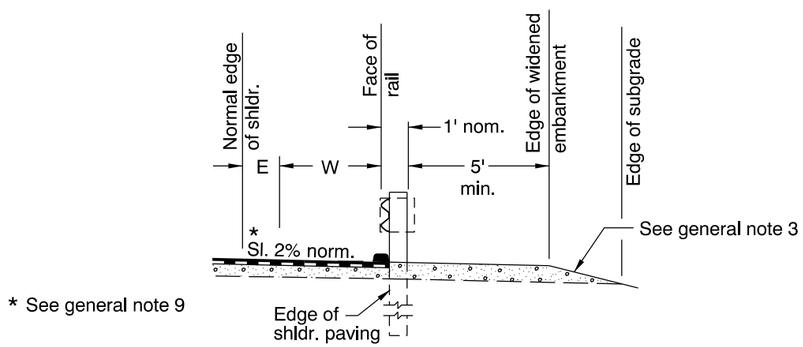

SECTION B-B

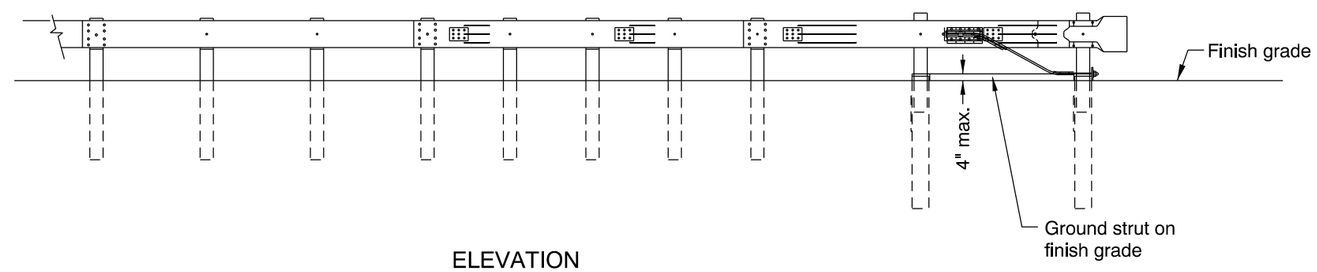

ELEVATION
PARABOLIC FLARE TERMINAL

TEST LEVEL	L (ft)	W (ft)
3 (> 45 mph)	37.5	3.0 or 4.0

GENERAL NOTES FOR ALL DETAILS:

1. For details not shown, see Std. Drgs. RD400, RD405, RD410, RD415 & RD435.
2. On two way two lane roads, both ends of guardrail runs shall be provided with a terminal. Paving of widened shldr. on both ends of guardrail runs is required.
3. 1:4 slope or flatter preferable, 1:3 max.
4. Provide flared terminal from ODOT's QPL. Install according to manufacturer's recommendation. Provide shop drawings to engineer.
5. Install fixed object marker on head of every terminal with "W" 4 feet or less.
6. This terminal may be used on state highway projects providing a reasonable recovery area exists behind the terminal or can be provided. See Highway Design Manual Section 4.6 Design Criteria/Establishment of Variable-Sized Recovery Areas for guidance.
7. "W" distance is measured to face of guardrail at end post, exclusive of end piece.
8. See Std. Drg. RD701 for drainage curbs, where required.
9. Cross slope to match adjacent roadway cross slope (preferred). If required, maximum shoulder slope 10% for guardrail widening. If required, maximum grade break at normal edge of shoulder 8%.

CALC. BOOK NO. N/A

BASELINE REPORT DATE 07-JAN-2013

NOTE: All material and workmanship shall be in accordance with the current Oregon Standard Specifications

The selection and use of this Standard Drawing, while designed in accordance with generally accepted engineering principles and practices, is the sole responsibility of the user and should not be used without consulting a Registered Professional Engineer.

OREGON STANDARD DRAWINGS

NON ENERGY-ABSORBING TERMINAL 3' OR 4' FLARE

2015

DATE	REVISION DESCRIPTION

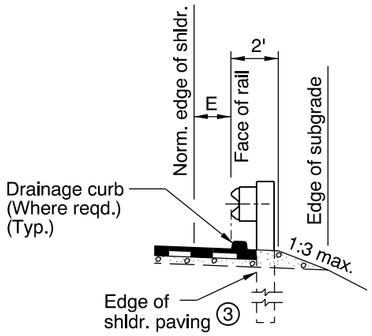

SECTION A-A

NOTES:
1. E = 2', where shown on plans.
2. Drainage curb alignment same as face of guardrail.

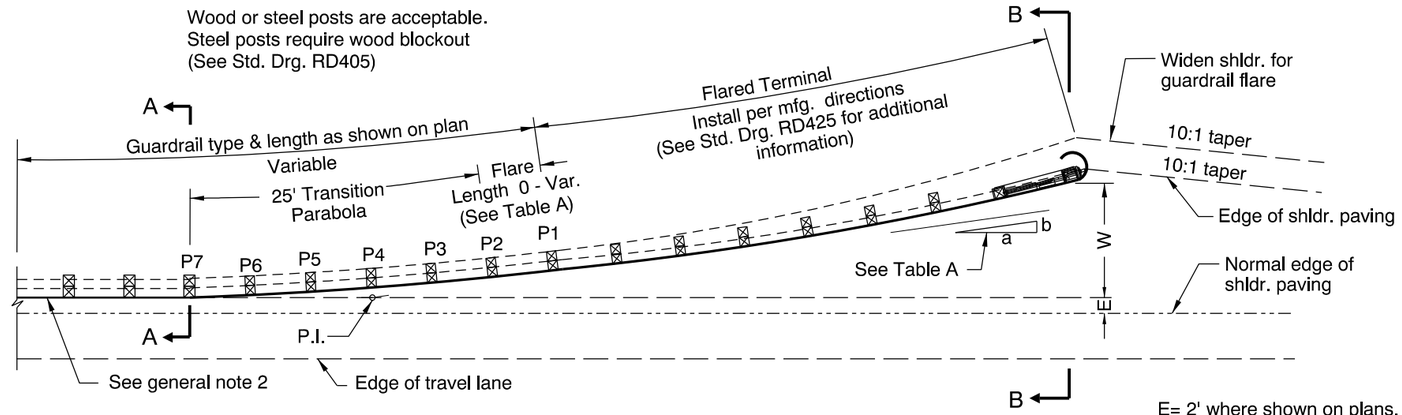

PLAN

E= 2' where shown on plans.

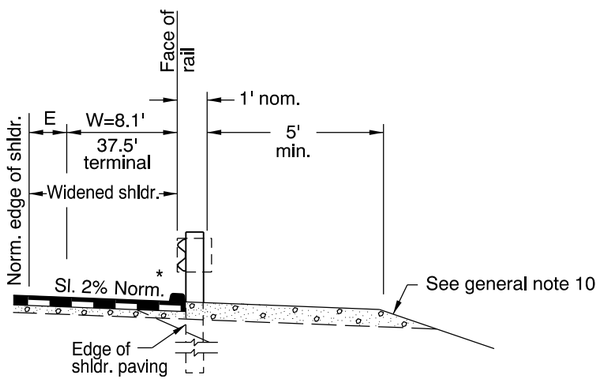

SECTION B-B

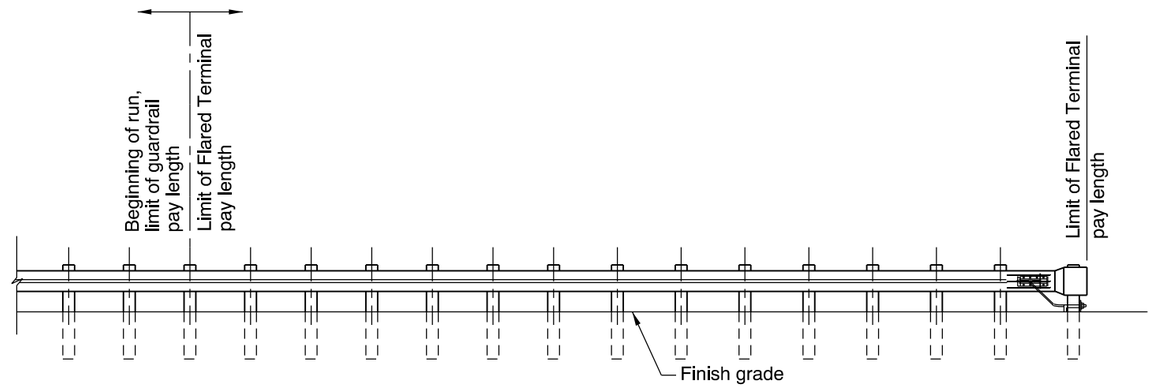

ELEVATION

* See general note 11

TABLE A

FOR "W" = 8.1' (25' TRANSITION PARABOLA), 12.5' FLARE LENGTH

FLARE RATE a:b	NORMAL FLARE LENGTH (ft)	NORMAL W (ft)		25' TRANSITION PARABOLA					12.5' FLARE	
				P7	P6	P5	P4	P3	P2	P1
			X (ft)	0	6.25	12.49	18.72	24.92	31.15	37.38
15:1	12.5	8.1	Y (ft)	0	.05	.21	0.47	.83	1.25	1.66

See plan above for additional information

The "Y" dimensions are offset from the tangent line of guardrail.

W=8.1' TERMINAL

(Embankment)

GENERAL NOTES FOR ALL DETAILS:

1. For details not shown, see Std. Drgs. RD400, RD405, RD410, RD415, RD420, RD425 & RD435.
2. Paving of widened shldr. on both ends of guardrail runs is required.
3. Type 2A guardrail shown.
4. Trailing ends (freeway, multilane and similar oneway facilities) not exposed to opposing traffic:
   (a) Guardrail terminals, use a Type 1 modified anchor, Type B end piece and do not flare.
   (b) At bridge ends, omit Transition Guardrail & Type 3 guardrail and substitute the normal required guardrail.
5. (a) All bolts except adjustment bolts shall be drawn tight on rails and components on initial installation.
   (b) Final tightness check on rail and components bolts and retightening as required to be done 30 days after initial installation.
6. Provide flared terminal from ODOT's QPL. Install according to manufacturer's recommendation. Provide shop drawings to engineer.
7. This drawing is retained for maintenance purposes. Do not use for new construction.
8. "W" distance is measured to face of guardrail at end post, exclusive of end piece.
9. See Std. Drg. RD701 for drainage curbs, where required.
10. 1:4 slope or flatter preferable, 1:3 max.
11. Cross slope to match adjacent roadway cross slope (preferred).
    If required, maximum shoulder slope 10% for guardrail widening.
    If required, maximum grade break at normal edge of shoulder 8%.

CALC. BOOK NO. N/A

BASELINE REPORT DATE 14-JAN-2011

NOTE: All material and workmanship shall be in accordance with the current Oregon Standard Specifications

The selection and use of this Standard Drawing, while designed in accordance with generally accepted engineering principles and practices, is the sole responsibility of the user and should not be used without consulting a Registered Professional Engineer.

OREGON STANDARD DRAWINGS

GUARDRAIL INSTALLATION
WIDE FLARE TERMINAL (EMBANKMENT)

2015

DATE	REVISION DESCRIPTION

rd430.dgn 14-JUL-2014

RD430

Effective Date: February 1, 2015 - May 31, 2015

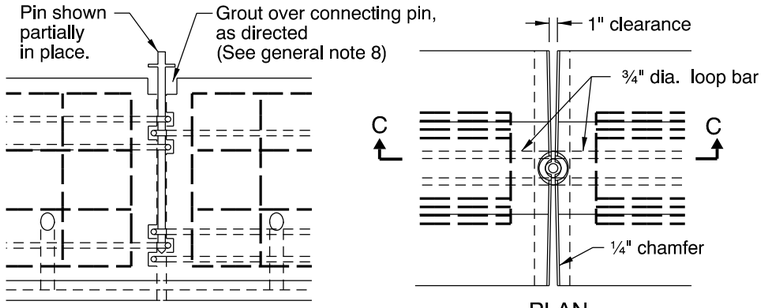

SECTION C-C

For details not shown, see End Views A-A and B-B

PLAN

For details not shown, see End Views A-A and B-B

PIN AND LOOP CONNECTION

PIN NOTES:

1. Washer shall be forged as integral part of pin or shall be welded as shown.

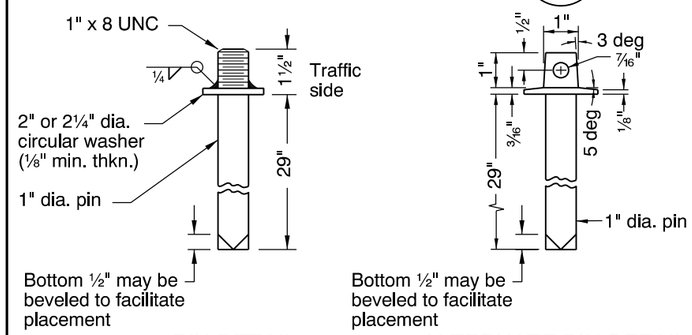

PIN DETAIL

ALTERNATE PIN DETAIL

STANDARD BARRIER PIN

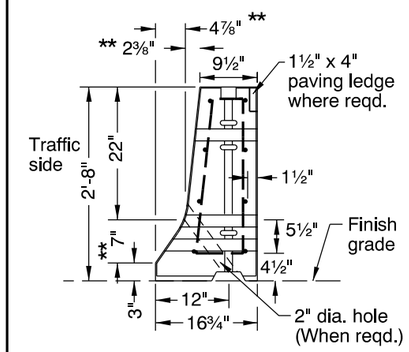

(NARROW BASE)

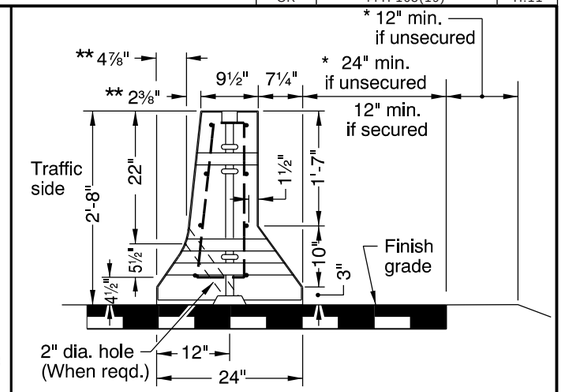

(WIDE BASE)

SHOULDER BARRIER

(For assembly details and dimensions, see median barrier at left)

* Barrier used as shoulder barrier and placed in areas where these dimensions cannot be obtained shall be secured to roadway

** Dimensions marked thus are to the intersection point of the barrier slopes. Construct the 10" radius to provide a smooth transition between the slopes.

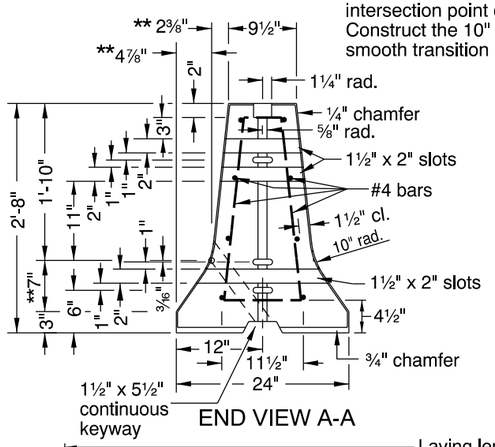

END VIEW A-A

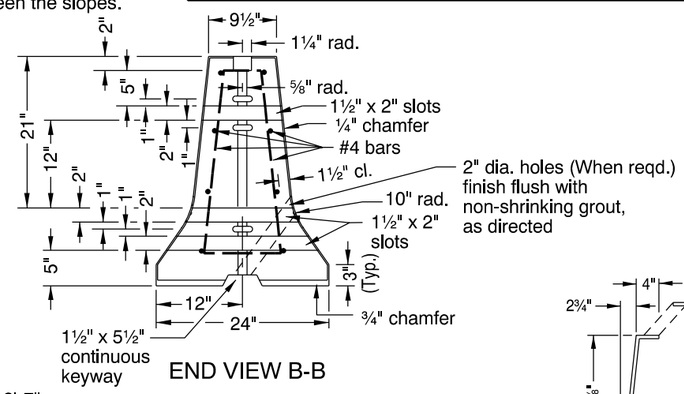

END VIEW B-B

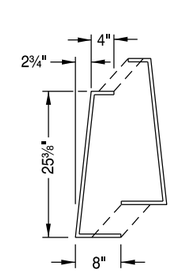

STIRRUP "M"
(MEDIAN BARRIER)
#4 Rebar

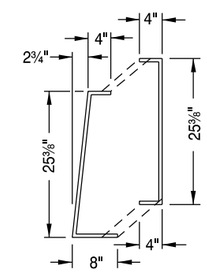

STIRRUP "S"
(SHOULDER BARRIER)
#4 Rebar

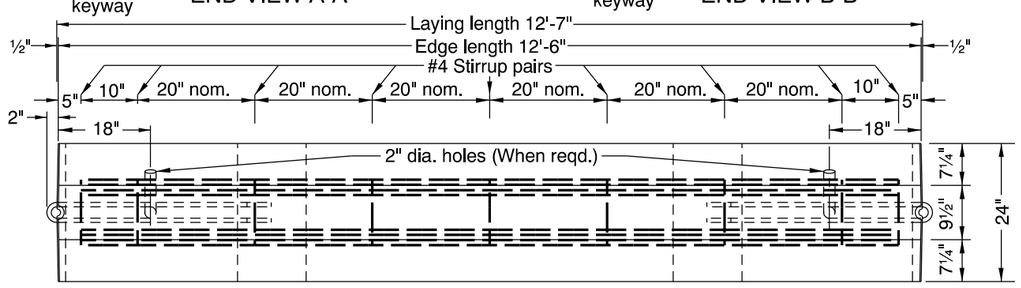

PLAN

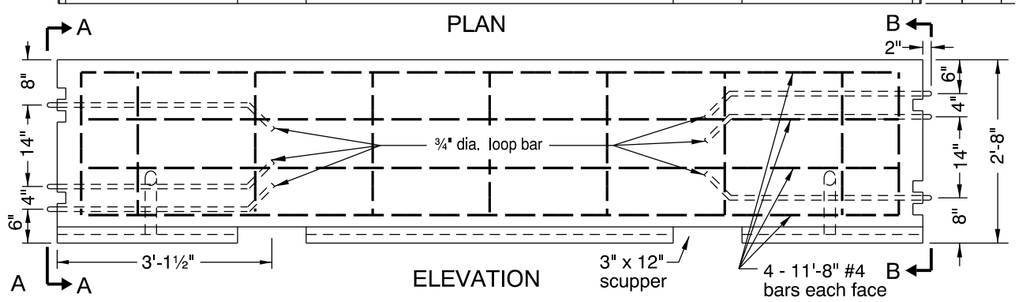

ELEVATION

MEDIAN BARRIER

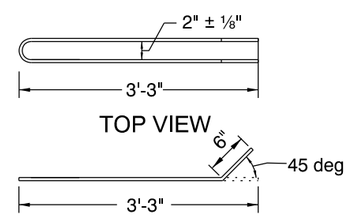

SIDE VIEW
LOOP BAR ¾" DIA.

LOOP BAR DETAIL

GENERAL NOTES FOR ALL DETAILS:

1. All reinforcement shall be full length as shown and shall be 2" clear of nearest face of conc., unless otherwise shown.
2. Max. chord length for curves with a 1425' radius or less shall be 12.5'. Max. chord length for curves with radii exceeding 1425' shall be 25'.
3. Normal use of precast barrier units is restricted to curvatures with radii greater than 770'.
4. Narrow base shldr. barrier to be used only at locations with backfill behind barrier as shown on plans.
5. Conc. median barrier is an acceptable alternate to wide base shldr. barrier.
6. Temp. conc. barrier to be precast conc. median barrier with pin and loop assembly.
7. When scuppers are not required, plug them with a minimum 2" of grout, as directed.
8. Conc. grout for grouting over pins, pinning holes or grouting of scuppers shall be a non-shrinking grout, weak in strength and of thick consistency, as directed.
9. Precast concrete barrier used in medians less than 8' in width shall be secured to roadway. See Std. Drgs. RD515 & RD516 for details.
10. See Std. Drg. RD516 for securing concrete barrier to roadway.
11. All pins, bolts, dowels, loop bars, and connectors shall be hot-dip galvanized after fabrication.

CALC. BOOK NO. N/A

BASELINE REPORT DATE 07-JAN-2013

NOTE: All material and workmanship shall be in accordance with the current Oregon Standard Specifications

The selection and use of this Standard Drawing, while designed in accordance with generally accepted engineering principles and practices, is the sole responsibility of the user and should not be used without consulting a Registered Professional Engineer.

OREGON STANDARD DRAWINGS

PRECAST CONCRETE BARRIER PIN AND LOOP ASSEMBLY

2015

DATE	REVISION DESCRIPTION

rd500.dgn 14-JUL-2014

RD500

Effective Date: February 1, 2015 - May 31, 2015

METHODS OF SECURING CONCRETE BARRIER TO ROADWAY

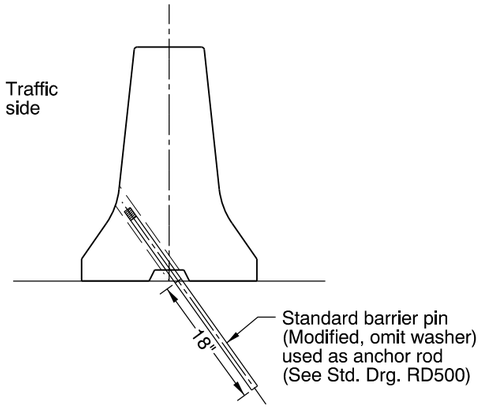

SHOULDER INSTALLATION
Secured using anchor rods (Angled)
Not allowed in narrow medians, see general note 7

PRECAST CONCRETE BARRIER
(See Std. Drg. RD500)

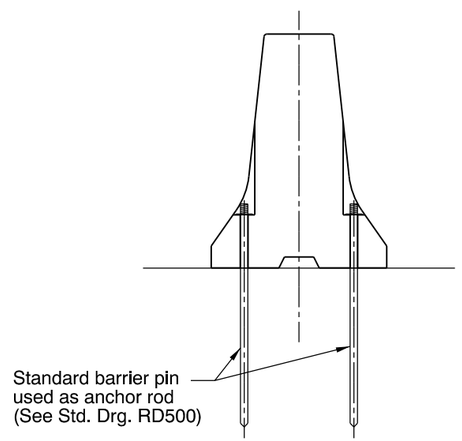

MEDIAN INSTALLATION
Secured using anchor rods (Vertical)

PRECAST CONCRETE BARRIER
(See Std. Drg. RD500 & RD515)

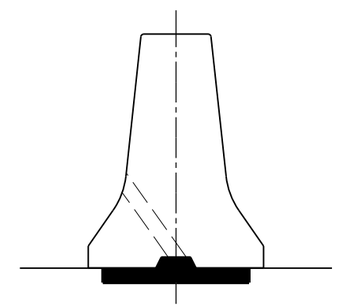

This detail is retained for maintenance purposes.
Do not use for new construction.

SHOULDER OR MEDIAN INSTALLATION
Secured using grout

PRECAST CONCRETE BARRIER
(See Std. Drg. RD500)

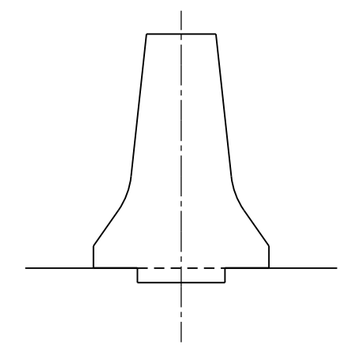

SHOULDER OR MEDIAN INSTALLATION
Secured by continuous shear key

CAST-IN-PLACE CONCRETE BARRIER
(See Std. Drg. RD505)

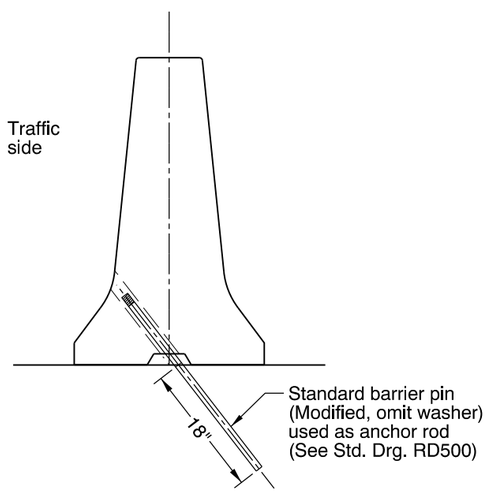

SHOULDER INSTALLATION
Secured using anchor rods (Angled) not allowed
in narrow medians, see general note 7

PRECAST TALL (42") CONCRETE BARRIER
(See Std. Drg. RD545)

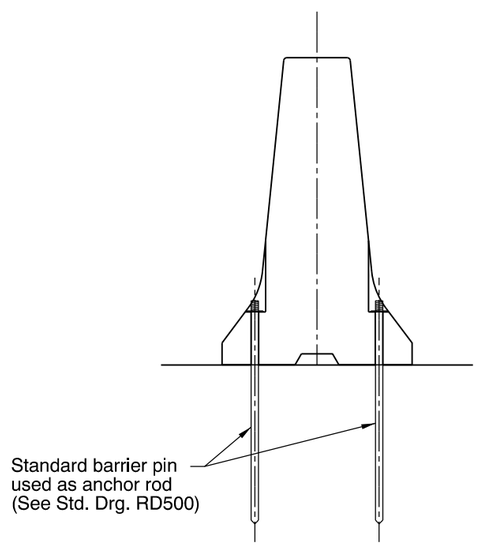

MEDIAN INSTALLATION
Secured using anchor rods (Vertical)

PRECAST TALL (42") CONCRETE BARRIER
(See Std. Drg. RD545 & RD515)

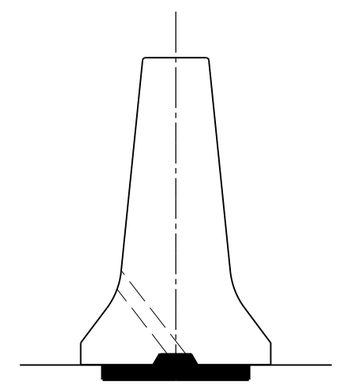

This detail is retained for maintenance purposes.
Do not use for new construction.

SHOULDER OR MEDIAN INSTALLATION
Secured using grout

PRECAST TALL (42") CONCRETE BARRIER
(See Std. Drg. RD545)

GENERAL NOTES FOR ALL DETAILS:

1. This standard drawing is intended to show acceptable methods of securing concrete barrier to roadway.
2. Secure concrete barrier to roadway when any of the following conditions exist:
   a) Barrier deflection requirements per Std. Drg. RD500 cannot be obtained, or
   b) When required by plans, or
   c) As directed by the Engineer.
3. Select one of the securing methods shown.
   For details not shown, see the standard drawing(s) referenced for the selected method.
4. Securing concrete barrier to roadway is in addition to connections between adjacent concrete barrier sections, bridge rails, retaining walls, and similar existing or constructed objects.
5. Concrete median barrier is an acceptable alternate to wide base shoulder barrier.
6. Temporary concrete barrier to be precast concrete median barrier with pin and loop assembly.
7. Precast concrete barrier used in medians less than 8' in width (as measured between nearest fog lines) shall be secured to roadway to resist impacts from both sides.
8. Anchor rods are standard barrier pins, modified for shoulder installation, as shown.
9. Normal permanent installation of concrete barrier is on top of finish grade, to provide 3" vertical reveal. Modify placement when required by plans, or as directed.
10. All pins, bolts, dowels, loop bars, and connectors shall be hot-dip galvanized after fabrication.

CALC. BOOK NO. N/A

BASELINE REPORT DATE 11-JAN-2010

NOTE: All material and workmanship shall be in accordance with the current Oregon Standard Specifications

The selection and use of this Standard Drawing, while designed in accordance with generally accepted engineering principles and practices, is the sole responsibility of the user and should not be used without consulting a Registered Professional Engineer.

OREGON STANDARD DRAWINGS

SECURING CONCRETE BARRIER TO ROADWAY

2015

DATE	REVISION DESCRIPTION

rd516.dgn 14-JUL-2014

RD516

Effective Date: February 1, 2015 - May 31, 2015

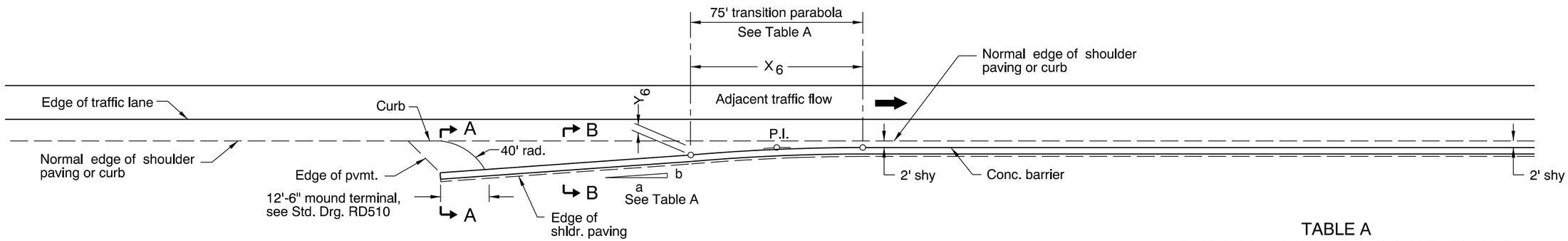

PLAN

TABLE A
FLARE RATES AND TRANSITION PARABOLA

Flare Rate a:b		Concrete Barrier Segment					
		1	2	3	4	5	6
	X (ft)	12.5	25	37.5	50	62.5	75
20:1	Y (ft)	0.10	0.20	0.50	0.80	1.30	1.90

See Std. Drg. RD500 for details not shown.

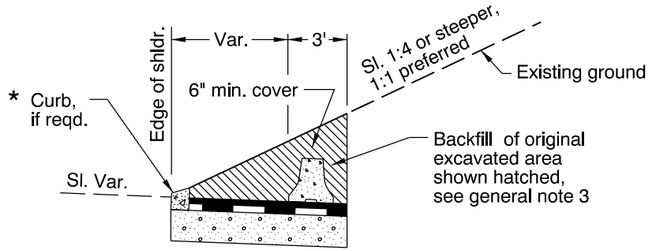

SECTION A-A

NOTE: Surfacing details same as adjacent shldr.

* For curb type or ditch, see plans.

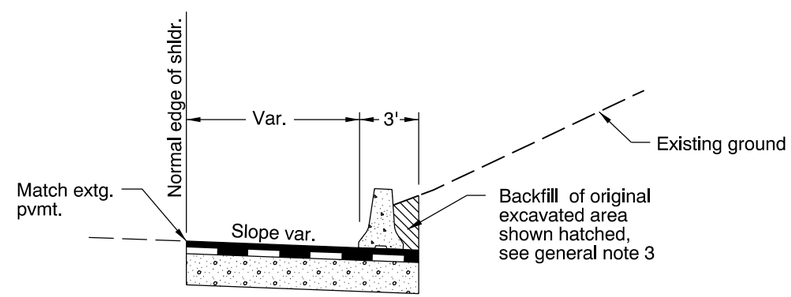

SECTION B-B

NOTE: Surfacing details same as adjacent shldr.

GENERAL NOTES FOR ALL DETAILS:

1. Normal use assumes an existing established slope. This detail is not intended for construction of new slope steeper than a slope of 1:2.
2. If the slope is flatter than 1:1 ensure that there is a clear recovery area behind the barrier, with no funneling effect to the back of the obstruction.
3. Provide drainage as required.

CALC. BOOK NO. N/A

BASELINE REPORT DATE 18-JUN-2010

NOTE: All material and workmanship shall be in accordance with the current Oregon Standard Specifications

The selection and use of this Standard Drawing, while designed in accordance with generally accepted engineering principles and practices, is the sole responsibility of the user and should not be used without consulting a Registered Professional Engineer.

OREGON STANDARD DRAWINGS

STANDARD CONCRETE BARRIER BURIED IN BACKSLOPE

2015

DATE	REVISION DESCRIPTION

rd526.dgn 14-JUL-2014

RD526

STATE	PROJECT	SHEET NUMBER
OR	PFH 163(19)	H.14

br256.dgn 07-2014

BR256

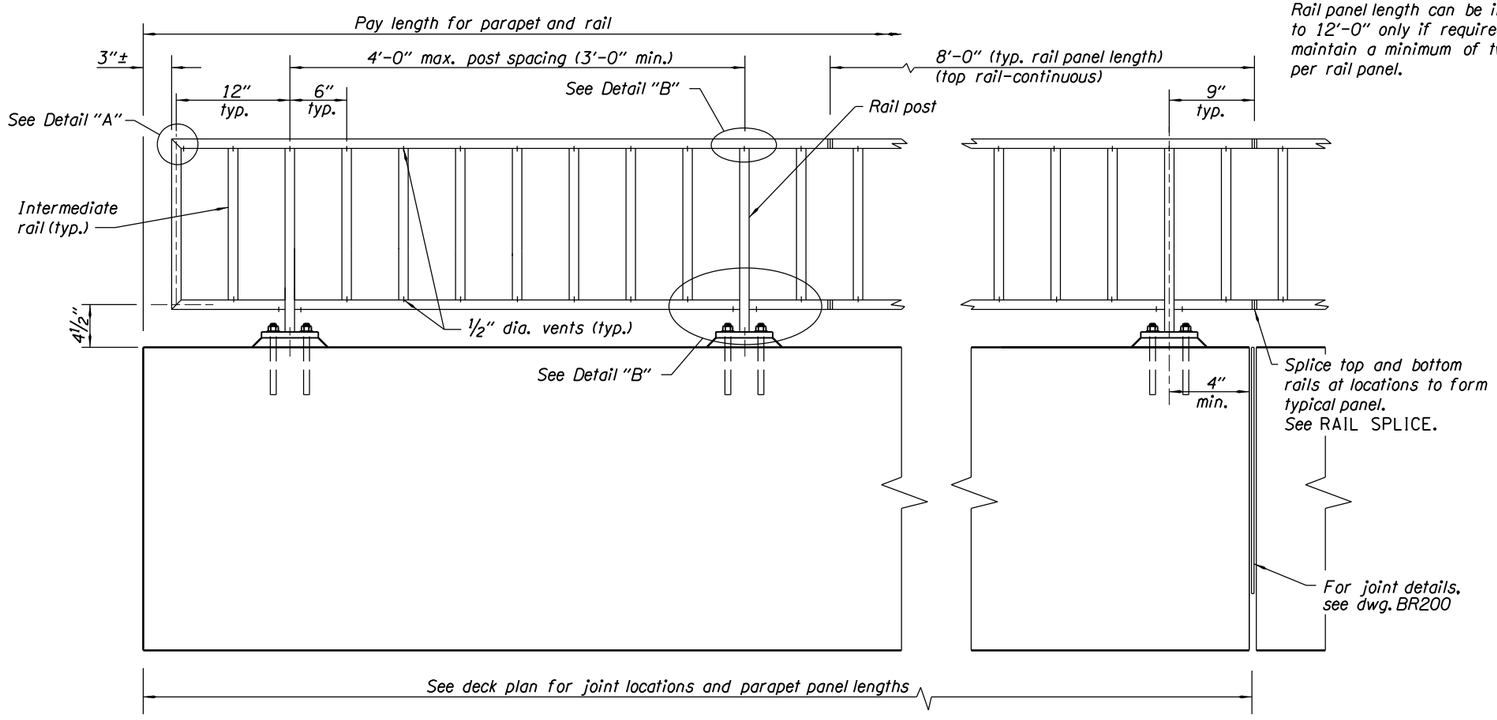

ELEVATION

NOTE:
Rail panel length can be increased to 12'-0" only if required to maintain a minimum of two posts per rail panel.

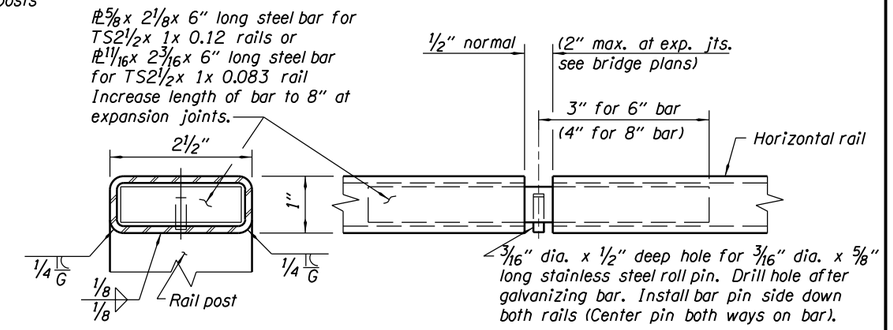

RAIL POST WELD

RAIL SPLICE

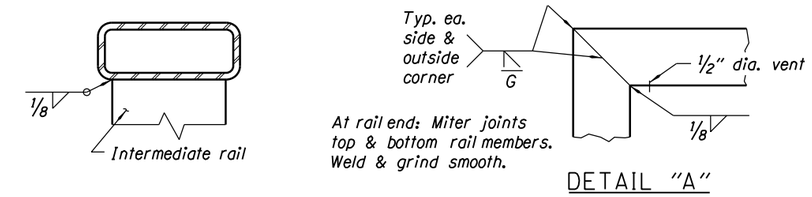

DETAIL "A"

INTERMEDIATE VERTICAL RAIL WELD

GENERAL NOTES:

Provide rectangular structural steel tubing conforming to Oregon Standard Specification 02810.20.
Provide all other structural steel conforming to AASHTO M183 (ASTM A36).
Hot-dip galvanize all structural steel including fasteners after fabrication. Provide Galvanize-Control silicon according to Oregon Standard Specification 02530.70
Construct steel railing and concrete parapet conforming to the horizontal and vertical alignment of the structure. Construct rail posts and parapet normal to grade and plumb.
Provide and install high strength resin bonded anchors (AASHTO M314, Grade 36, ASTM A307) according to Oregon Standard Specifications 00535 and manufacturer's directions.
Tighten anchor nuts by the turn-of-the-nut method with a nut rotation of 60° turn from a snug tight condition.
Provide continuous top and bottom horizontal rail elements over a minimum of two posts unless shown otherwise on the detail plans.
Provide TS 2½ x 1 x 0.125 (11 gauge) for rail posts.
Provide TS 2½ x 1 x 0.083 (14 gauge) or TS 2½ x 1 x 0.125 (11 gauge) for horizontal and end vertical rails.
Provide TS 2 x 1 x 0.083 (14 gauge) or TS 2½ x 1 x 0.125 (11 gauge) for intermediate rails.

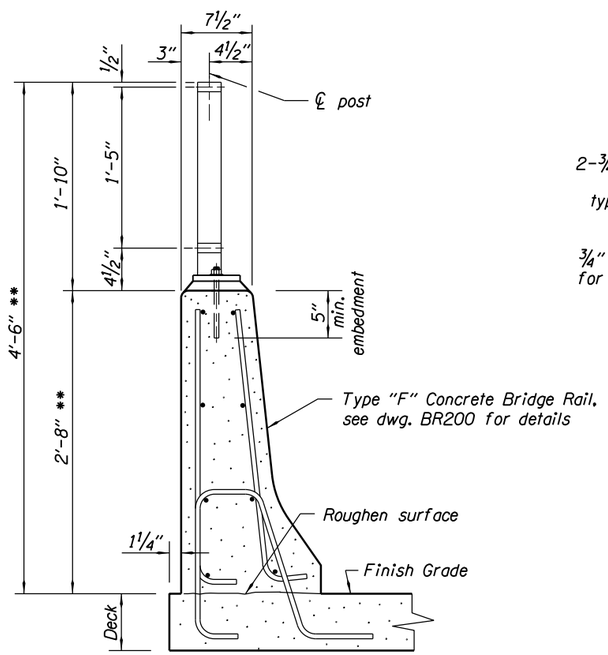

TYPICAL SECTION

** Dimensions indicated are above finished grade.

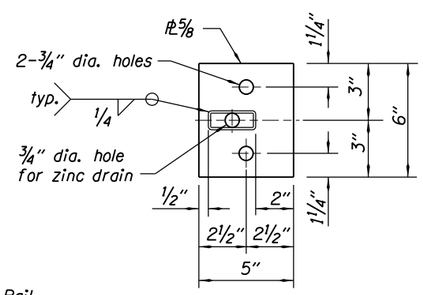

PLAN

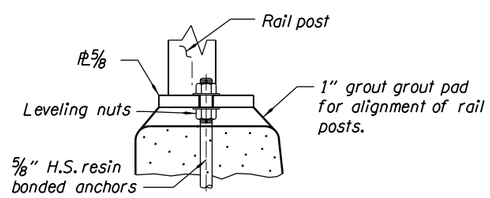

SECTION

BASE PLATE DETAILS

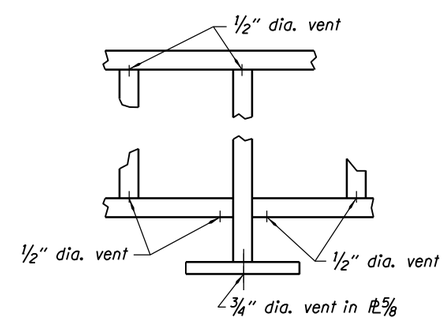

DETAIL "B"

Accompanied by dwg. BR200

CALC. BOOK NO. _____

BASELINE REPORT DATE 11-JUL-2014

NOTE: All material and workmanship shall be in accordance with the current Oregon Standard Specifications

The selection and use of this Standard Drawing, while designed in accordance with generally accepted engineering principles and practices, is the sole responsibility of the user and should not be used without consulting a Registered Professional Engineer.

OREGON STANDARD DRAWINGS

PEDESTRIAN RAIL ON TYPE "F" CONCRETE BRIDGE RAIL

2015

DATE	REVISION DESCRIPTION

Effective Date: February 1, 2015 - May 31, 2015

1:8 - BR256

STATE	PROJECT	SHEET NUMBER
OR	PFH 163(19)	I.1

LEGEND

℄	Centerline
SJ	Score Joint
CJ	Contraction Joint
104	Proposed Contour
GB	Grade Break
	Flow Line
4:1 4.9%	Direction and Percentage or H:V Ratio of Slope
104.72	Proposed Spot Elevation
@	At
#	Pound or Number
%	Percentage
A/C	Asphaltic Concrete
BW	Bottom of Wall
CO	Contacting Officer
CP	Center Point
EQ	Equal
HP	High Point
I.E.	Invert Elevation
L	Length of Curve
MP	Mid-Point
Max.	Maximum
Min.	Minimum
N.I.C	Not in Contract
OC	On Center
POB	Point of Beginning
POE	Point of Ending
PC	Point of Curvature
PCC	Point of Compound Curvature
PRC	Point of Reverse Curvature
PI	Point of Intersection
R	Radius
RP	Radius Center Point
SQ	Square
TW	Top of Wall
Typ.	Typical
VIF	Verify in Field
	Align
Match	Match
	Tree, Protect-In-Place

LAYOUT NOTES

1. Site survey was prepared by FHWA on 2013. All coordinates shown on the drawings are based upon the coordinate system established by the surveyor. Survey information is provided for reference only.
2. Do not scale from the Landscape drawings. The location of features not specifically dimensioned may not be determined by scale. If conflicts arise in the field, contact the CO for resolution.
3. All dimensions are to the outside face of walls or back of curbs, unless otherwise noted.
4. All curved objects shall have smooth, continuous curves with consistent radii as indicated. Each curve shall meet adjacent curves or linear sections on the tangent, unless noted otherwise.

GENERAL NOTES

1. Contractor shall be responsible for being familiar with all underground and overhead utilities, pipes and structures. Contractor shall take sole responsibility for cost incurred due to damage and replacement of said utilities.
2. Streets, sidewalks, and adjacent property shall be protected throughout the work as required by local codes and regulations and approved by the CO.
3. Refer to ODOT standard plans and specifications where applicable.
4. All work and portions of the project shall comply with all applicable codes.
5. Contractor is responsible for replacement of any existing materials to remain that are damaged during construction.
6. All limits of work, property lines and lot lines shall be verified prior to commencing work.
7. Contractor shall notify CO (7) days prior to commencement of work to coordinate project observation schedules.
8. Contractor shall be responsible for any coordination with subcontractors as required to accomplish all construction operations. All piping, conduit, sleeves, etc., shall be set in place prior to installation of construction items.
9. All dimensions are from outside face of paving, walls, etc., unless otherwise noted on plans.
10. Prior to installation of any construction item, forms with steel in place shall be inspected and approved by the CO.

GRADING NOTES

1. Verify accuracy of existing grades and interpolated elevations prior to beginning work. Notify CO of any discrepancy prior to beginning work.
2. Protect all trees indicated to remain.
3. All proposed grades are to meet and blend in with existing grading at project limit, property lines, building lines and existing curbs.
4. 'Round off' all sharp ridges existing on site whether or not such conditions are indicated on plans.
5. All areas shall have positive drainage to approved drainage structures or conveyances.
6. All walkways and paved areas shall have smooth and continuous elevation changes.
7. Set straight grades between given elevations. Unless otherwise indicated.
8. Provide 2% max. slope, perpendicular to direction of travel, on all paved pedestrian surfaces, unless noted otherwise.
9. Grade break lines are shown graphically to illustrate drainage patterns and are not to be installed as actual joint lines, except where they coincide with paving joints.
10. Refer to Civil for trail grading.

SHEET INDEX

I.1 Legend, Abbreviations & Notes
I.2 Wonder Creek Trail Side Rest Area Plan
I.3 Auxiliary Trail & Picnic Area at Hole-in-the-Wall Falls
I.4 Auxiliary Trail Entry & Picnic Area at Hole-in-the-Wall Falls - Layout
I.5 Starvation Ridge Trailhead
I.6 Starvation Creek Trailhead
I.7 Trail Orientation Area at Starvation Creek Trailhead
I.8 Details - Paving
I.9 Details - Curbs
I.10 Details - Walls
I.11 Details - Walls
I.12 Details - Walls
I.13 Details - Bronze Sign
I.14 Details - Stone Masonry, Pillar
I.15 Details - Retaining Walls
I.16 Details - Retaining Walls
I.17 Details - Picnic Table
I.18 Details - Bicycle Storage Rack
I.19 Details - Hole-in-the-Wall Falls - Section

Legend, Abbreviations & Notes

plotted 2/9/2015 4:48 PM by Aaron Maples
Designed by:
Checked by:

STATE	PROJECT	SHEET NUMBER
OR	PFH 163(19)	1.2

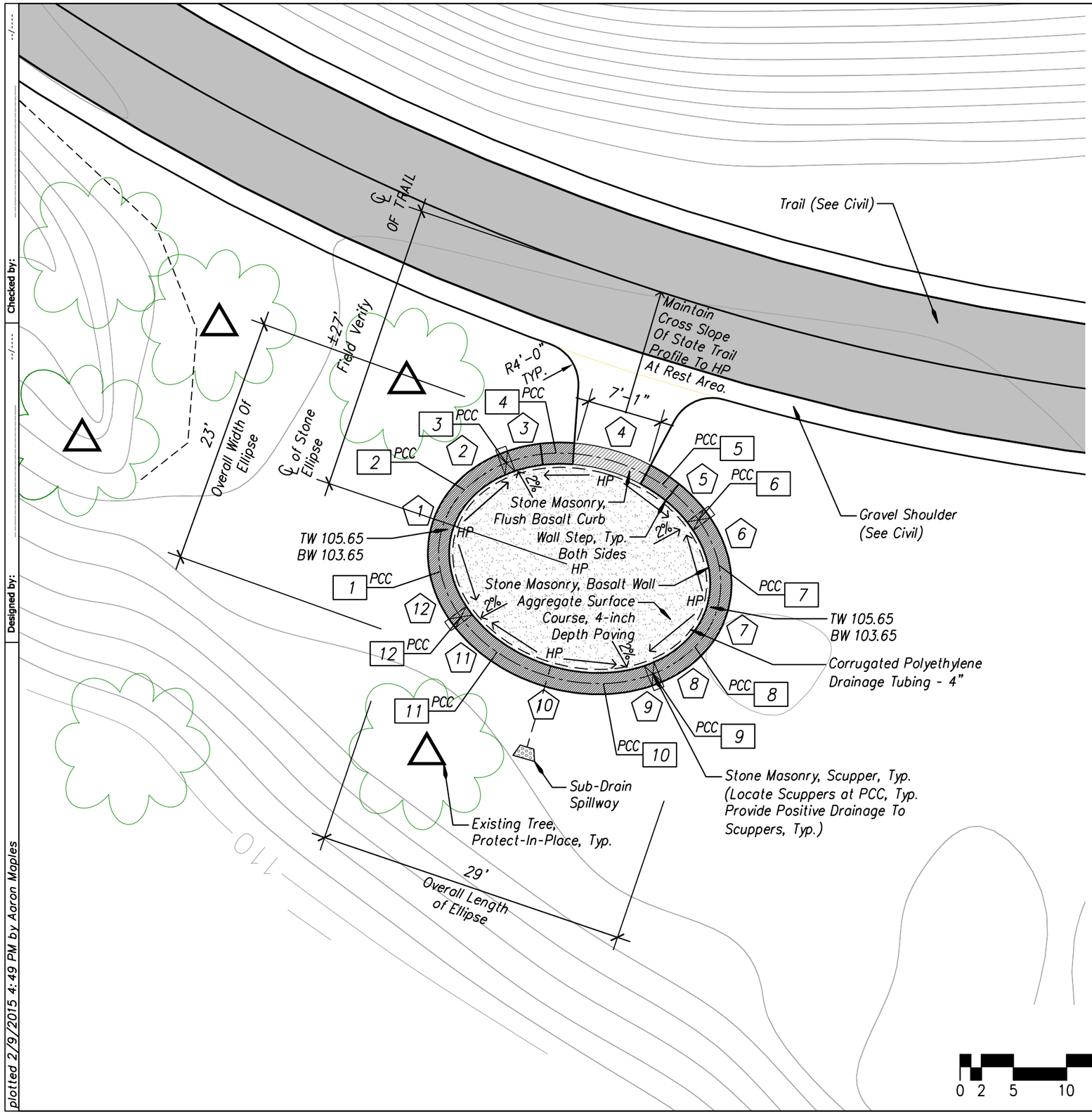

CURVE DATA

CURVE NO.	CURVE RADIUS	CURVE LENGTH	INCLUDED ANGLE
1	8'-4 3/4"	8'-4"	56.79°
2	11'-2"	4'-8"	24.14°
3	13'-9 3/8"	4'-9"	19.85°
4	17'-2 5/8"	10'-7"	35.22°
5	13'-9 3/8"	4'-9"	19.85°
6	11'-2"	4'-8"	24.14°
7	8'-4 3/4"	8'-4"	56.79°
8	11'-2"	4'-8"	24.14°
9	13'-9 3/8"	4'-9"	19.85°
10	17'-2 5/8"	10'-7"	35.22°
11	13'-9 3/8"	4'-9"	19.85°
12	11'-2"	4'-8"	24.14°

COORDINATE DATA

COORD. SYMBOL	NORTHING IN FEET	EASTING IN FEET
1	738544.14	7893727.36
2	738551.80	7893729.62
3	738554.34	7893733.54
4	738555.26	7893738.20
5	738552.30	7893748.19
6	738549.01	7893751.61
7	738544.73	7893753.51
8	738537.07	7893751.24
9	738534.52	7893747.32
10	738533.61	7893742.66
11	738536.57	7893732.67
12	738539.87	7893729.26

NOTES

1. All planting by others, refer to planting memo.
2. Field verify location of improvements with CO prior to construction.

0 2 5 10 20

N

Wonder Creek Trail Side Rest Area

Checked by:

Designed by:

plotted 2/9/2015 4:49 PM by Aaron Maples

STATE	PROJECT	SHEET NUMBER
OR	PFH 163(19)	I.3

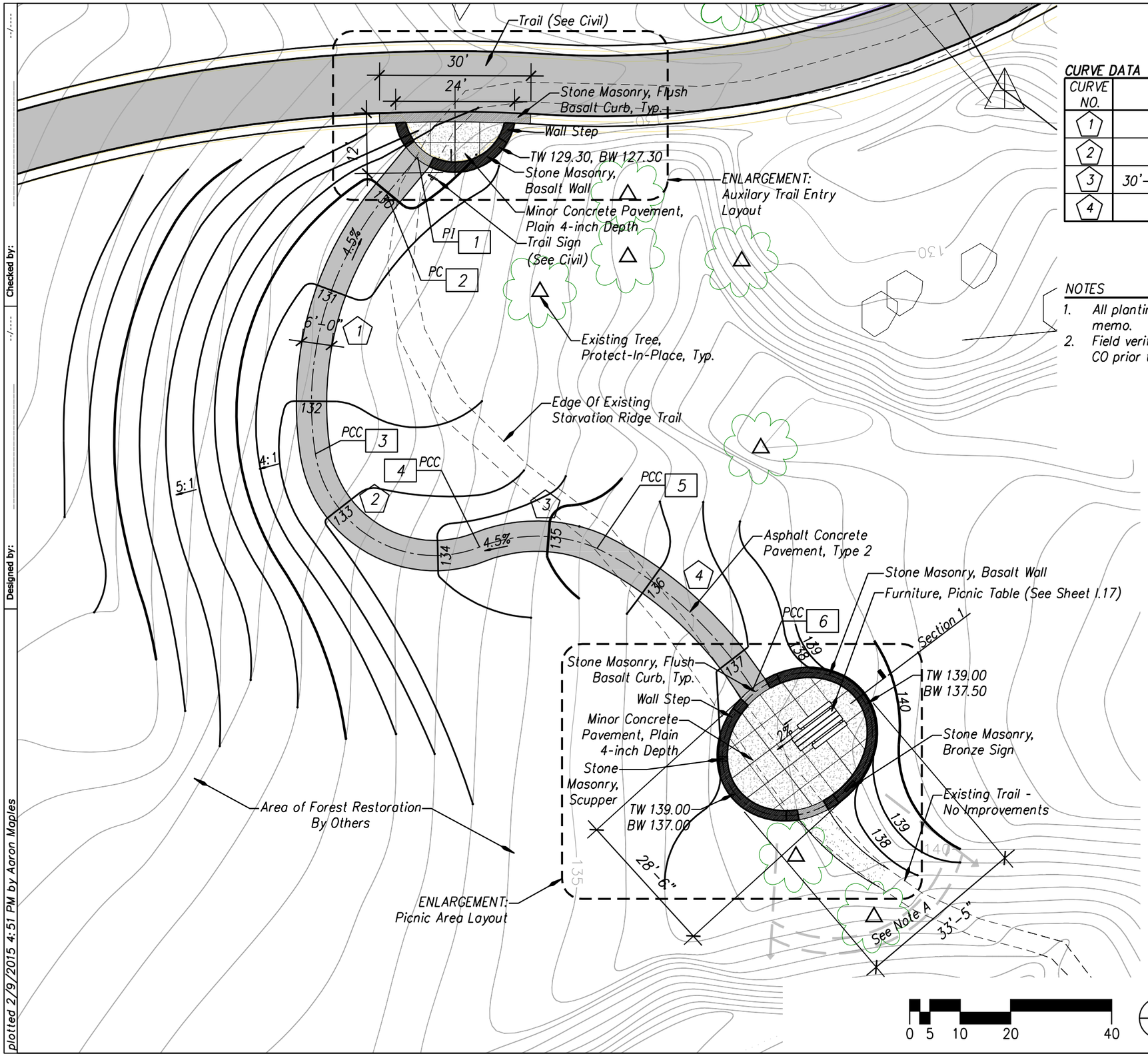

CURVE DATA

CURVE NO.	CURVE RADIUS	CURVE LENGTH	INCLUDED ANGLE
1	65'-0"	54'-11"	48.43°
2	24'-0"	42'-11"	102.41°
3	30'-8 1/2"	23'-10"	44.5°
4	76'-2"	42'-9"	32.15°

COORDINATE DATA

COORD. SYMBOL	NORTHING IN FEET	EASTING IN FEET
1	738839.65	7894689.31
2	738832.22	7894683.17
3	738780.81	7894669.03
4	738762.36	7894701.57
5	738762.11	7894724.82

NOTES

1. All planting by others, refer to planting memo.
2. Field verify location of improvements with CO prior to construction.

SHEET NOTES

A. General area of viewshed management and tree removal - Removal of up to (30) trees as identified by CO in field.

Auxiliary Trail & Picnic Area at Hole-in-the-Wall Falls

Designed by:

Checked by:

plotted 2/9/2015 4:51 PM by Aaron Maples

STATE	PROJECT	SHEET NUMBER
OR	PFH 163(19)	I.4

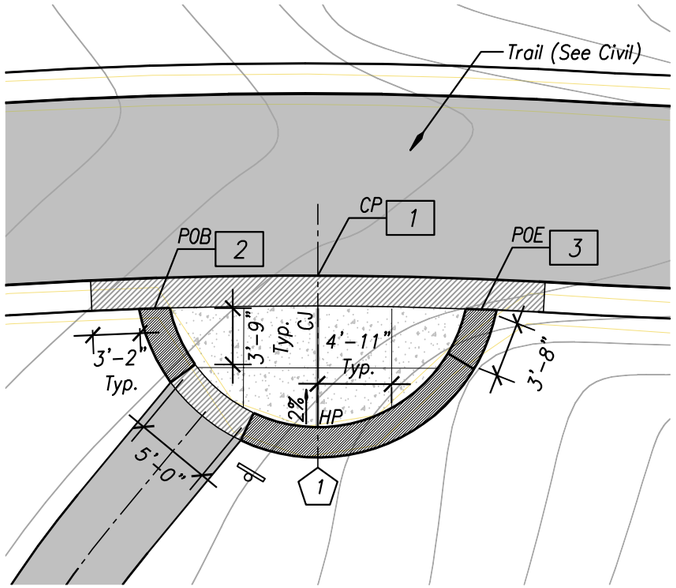

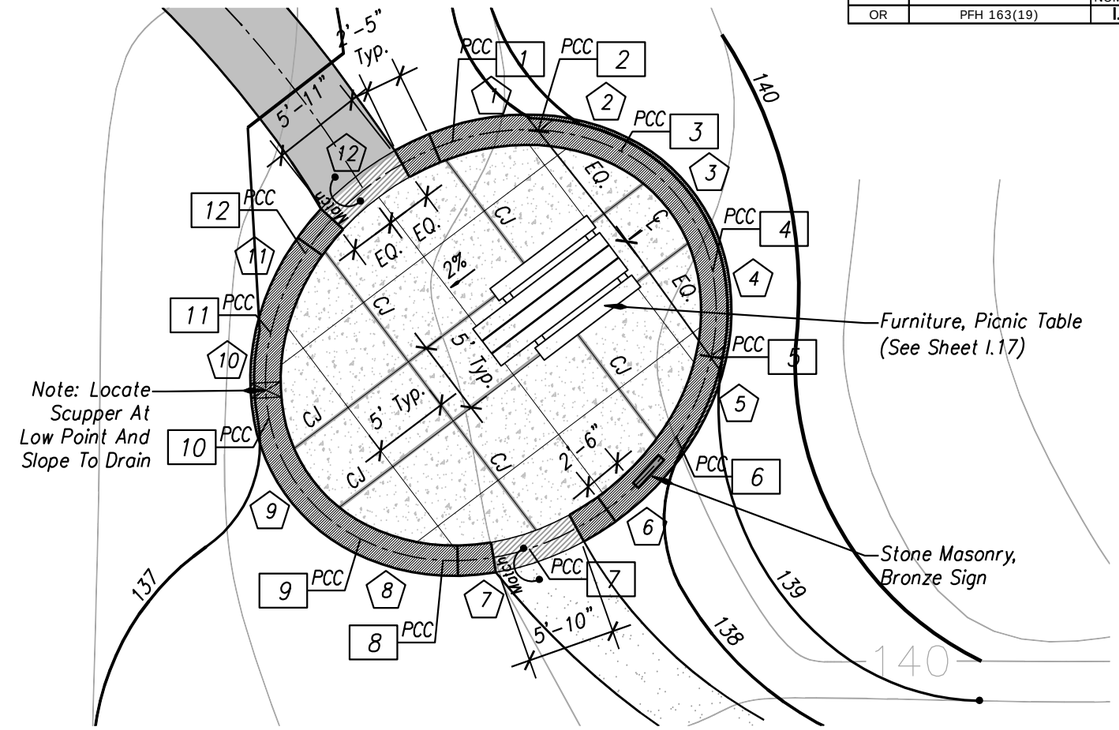

CURVE DATA

CURVE NO.	CURVE RADIUS	CURVE LENGTH	INCLUDED ANGLE
1	11'-0"	30'-1"	156.95°

COORDINATE DATA

COORD. SYMBOL	NORTHING IN FEET	EASTING IN FEET
1	738848.60	7894696.71
2	738839.65	7894689.31
3	738832.22	7894683.17

CURVE DATA

CURVE NO.	CURVE RADIUS	CURVE LENGTH	INCLUDED ANGLE
1	15'-10 1/2"	5'-9"	20.76°
2	13'-8"	5'-8"	23.76°
3	11'-2 3/4"	10'-4"	52.86°
4	13'-8"	5'-8"	23.76°
5	15'-10 1/2"	5'-9"	20.76°
6	18'-8 3/8"	12'-5"	38.09°
7	15'-10 1/2"	5'-9"	20.76°
8	13'-8"	5'-8"	23.76°
9	11'-2 3/4"	10'-4"	52.86°
10	13'-8"	5'-8"	23.76°
11	15'-10 1/2"	5'-9"	20.76°
12	18'-8 3/8"	12'-5"	38.09°

COORDINATE DATA

COORD. SYMBOL	NORTHING IN FEET	EASTING IN FEET
1	738736.76	7894761.97
2	738737.53	7894767.64
3	738736.12	7894773.09
4	738728.15	7894779.13
5	738722.52	7894779.01
6	738717.27	7894776.74
7	738709.90	7894767.01
8	738709.13	7894761.34
9	738710.54	7894755.89
10	738718.51	7894749.85
11	738724.14	7894749.97
12	738729.39	7894752.24

NOTES

1. All planting by others, refer to planting memo.
2. Field verify location of improvements with CO prior to construction.

0 2 5 10 20

N

Auxiliary Trail Entry & Picnic Area Layout at Hole-in-the-Wall Falls

Checked by:

Designed by:

plotted 2/9/2015 5:00 PM by Aaron Maples

STATE	PROJECT	SHEET NUMBER
OR	PFH 163(19)	I.5

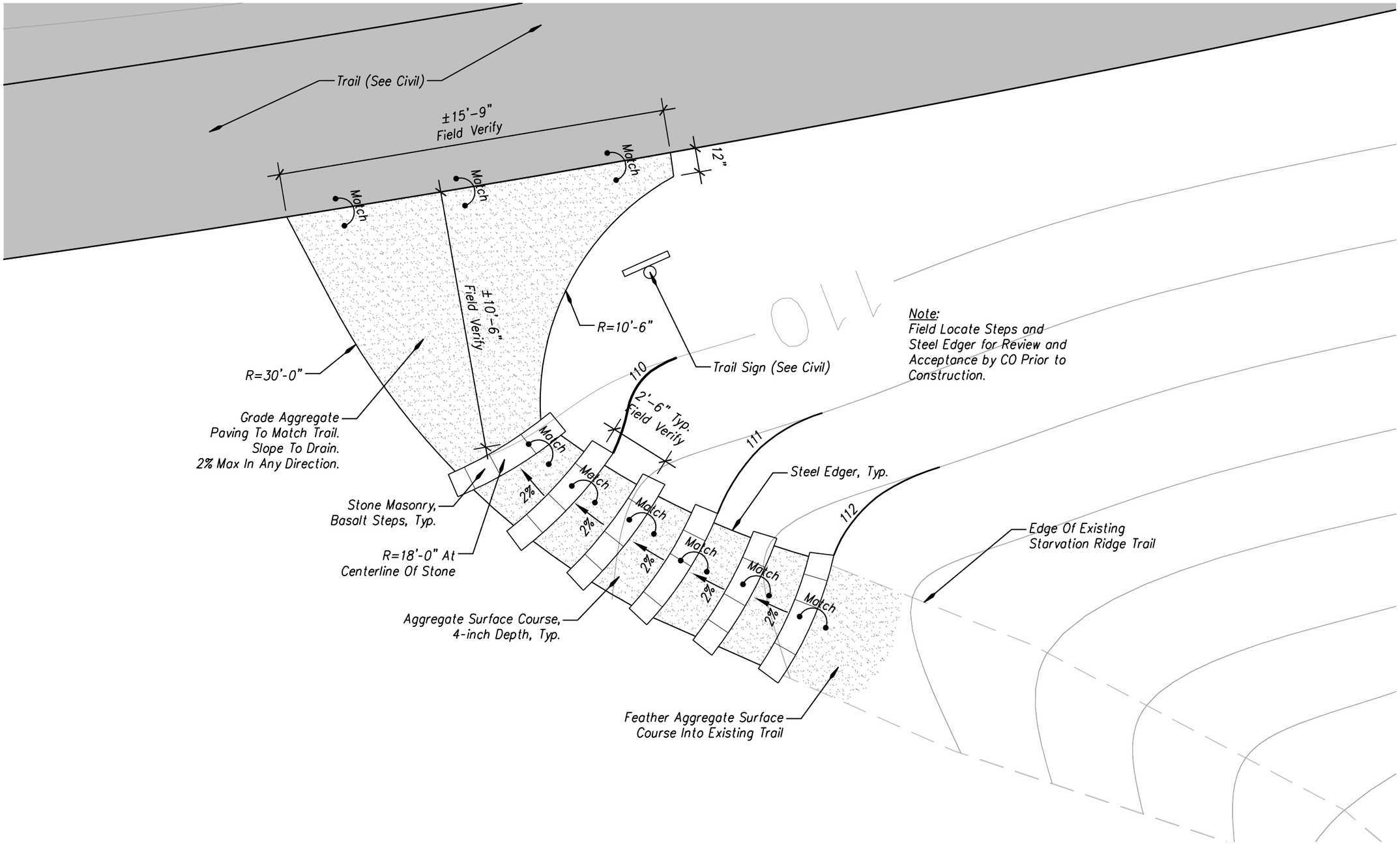

Note:
Field Locate Steps and Steel Edger for Review and Acceptance by CO Prior to Construction.

0 2 4 8

N

Starvation Ridge Trailhead

Checked by: --/----

Designed by: --/----

plotted 2/9/2015 5:01 PM by Aaron Maples

STATE	PROJECT	SHEET NUMBER
OR	PFH 163(19)	I.6

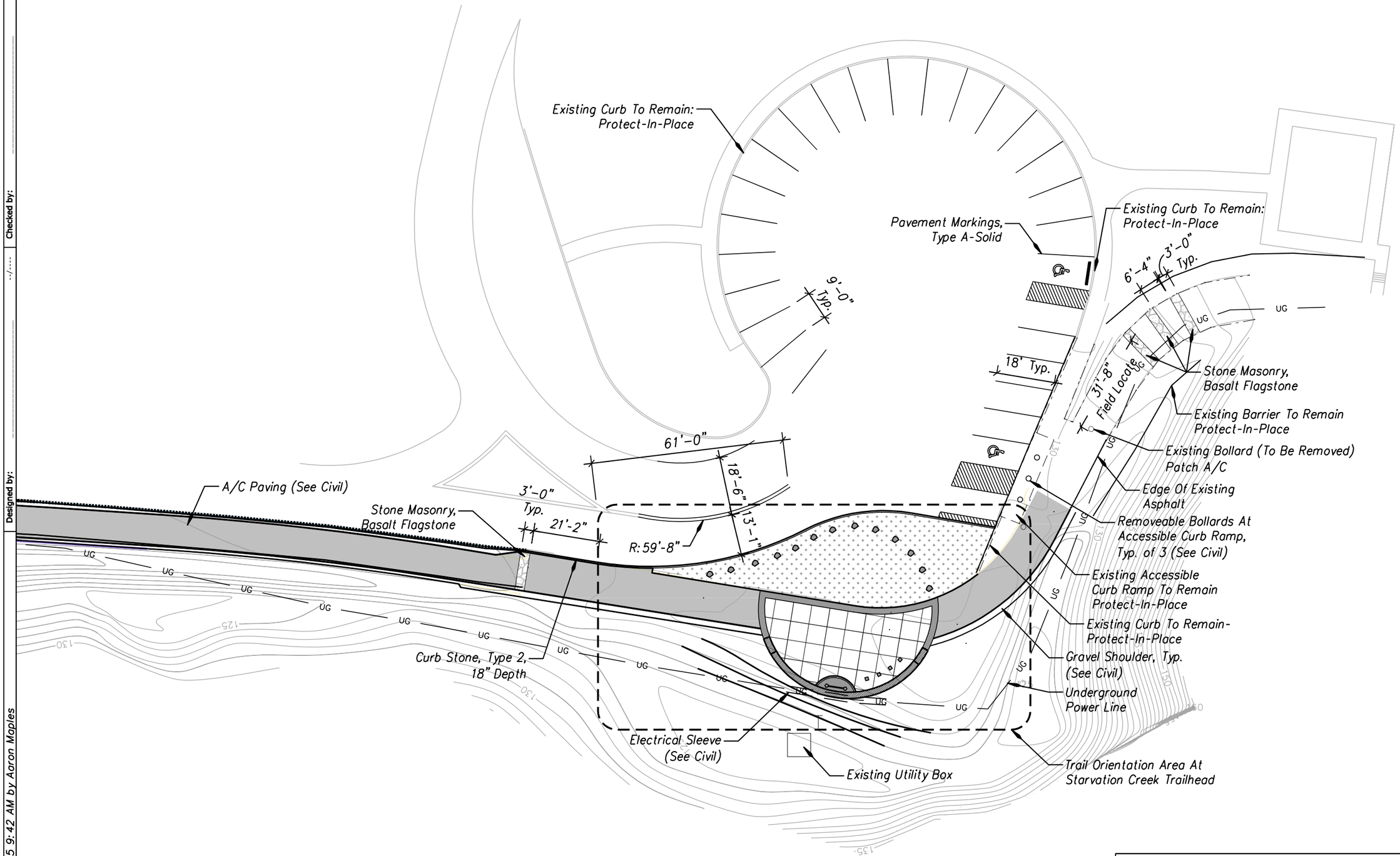

Starvation Creek Trailhead

Designed by:

Checked by:

plotted 2/9/2015 9:42 AM by Aaron Maples

STATE	PROJECT	SHEET NUMBER
OR	PFH 163(19)	1.7

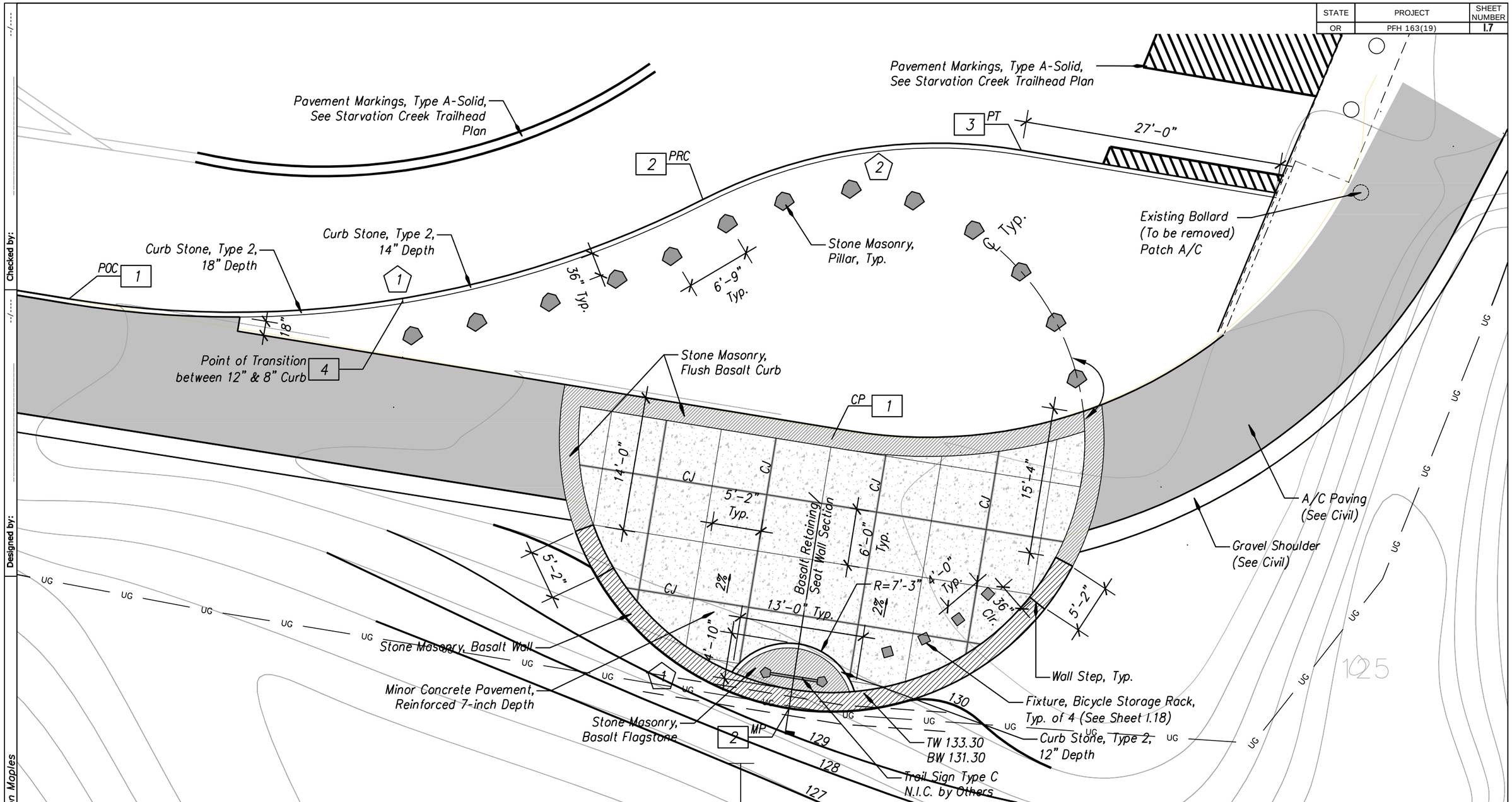

CURB

CURVE DATA

CURVE NO.	CURVE RADIUS	CURVE LENGTH	INCLUDED ANGLE
1	8'-4 3/4"	8'-4"	56.79°
2	11'-2"	4'-8"	24.14°

COORDINATE DATA

COORD. SYMBOL	NORTHING IN FEET	EASTING IN FEET
1	738544.14	7893727.36
2	738551.80	7893729.62
3	738554.34	7893733.54
4	739242.91	7897864.16

STONE MASONRY

CURVE DATA

CURVE NO.	CURVE RADIUS	CURVE LENGTH	INCLUDED ANGLE
1	8'-4 3/4"	8'-4"	56.79°

COORDINATE DATA

COORD. SYMBOL	NORTHING IN FEET	EASTING IN FEET
1	738544.14	7893727.36
2	738551.80	7893729.62

0 2 5 10 20

N

Trail Orientation Area at Starvation Creek Trailhead

Checked by:

Designed by:

plotted 2/9/2015 9:43 AM by Aaron Maples

STATE	PROJECT	SHEET NUMBER
OR	PFH 163(19)	I.8

Note:
Install Mason Sand on Top of Sealant Before Sealant Cures, Typ.

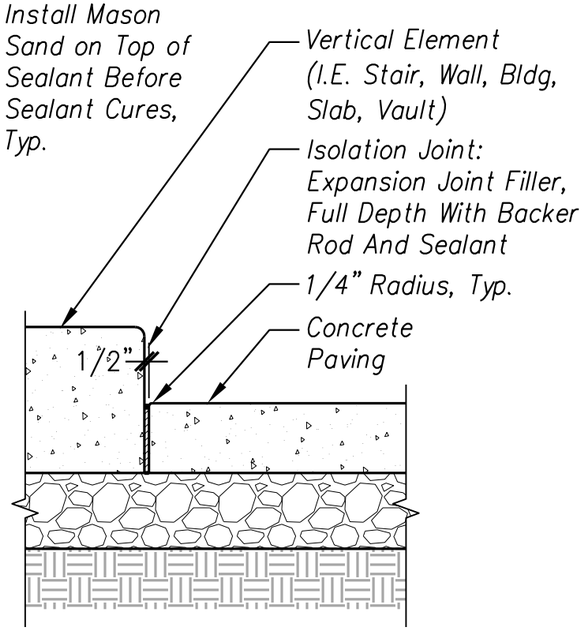

ISOLATION JOINT AT VERTICAL ELEMENT
SCALE: 1" = 1'-0"

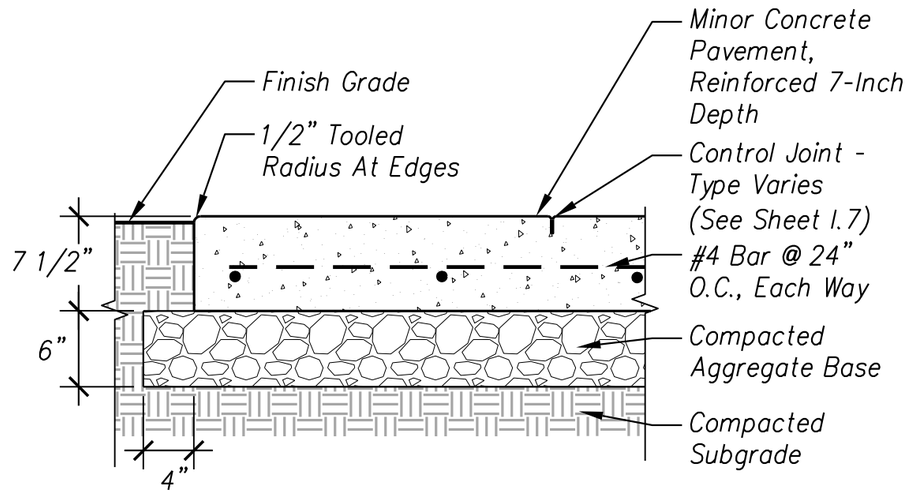

MINOR CONCRETE PAVEMENT, REINFORCED 7-INCH DEPTH
SCALE: 1" = 1'-0"

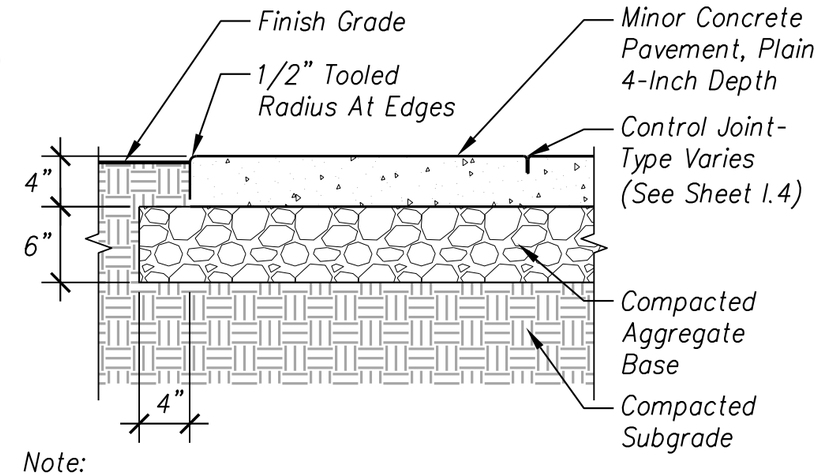

Note:
1. Minor Concrete Pavement, Plain 4-Inch Depth: Exposed Aggregate Finish. See Sheet I.3 For Locations.

MINOR CONCRETE PAVEMENT, PLAIN 4-INCH DEPTH
SCALE: 1" = 1'-0"

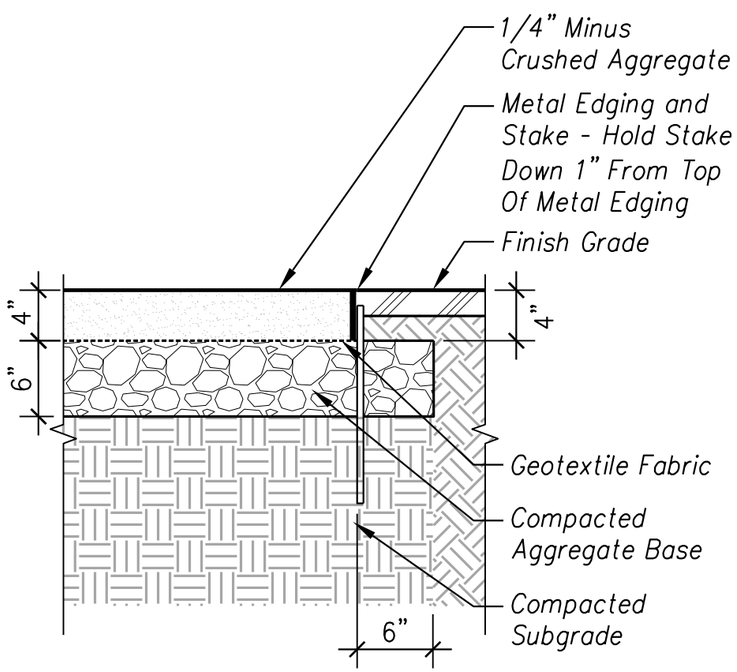

AGGREGATE SURFACE COURSE, 4-INCH DEPTH
SCALE: 1" = 1'-0"

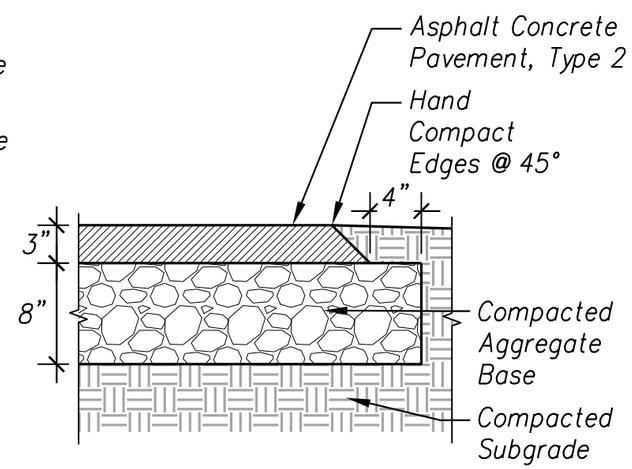

ASPHALT CONCRETE PAVEMENT, TYPE 2
SCALE: 1" = 1'-0"

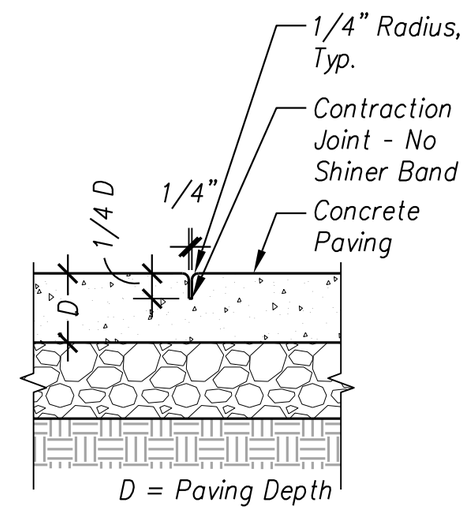

CONTRACTION JOINT (CJ)
SCALE: 1" = 1'-0"

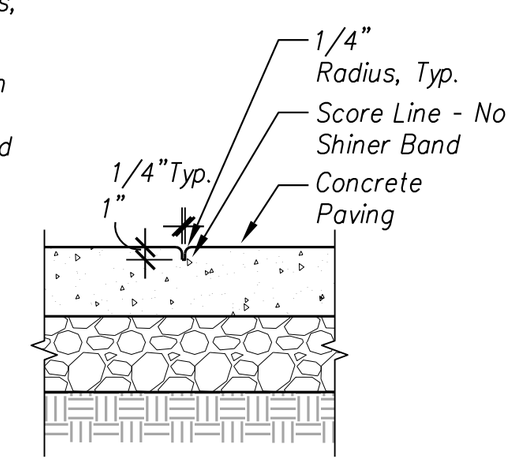

SCORE JOINT
SCALE: 1" = 1'-0"

Details
Paving

Checked by:
Designed by:
plotted 2/9/2015 5:04 PM by Aaron Maples

STATE	PROJECT	SHEET NUMBER
OR	PFH 163(19)	I.9

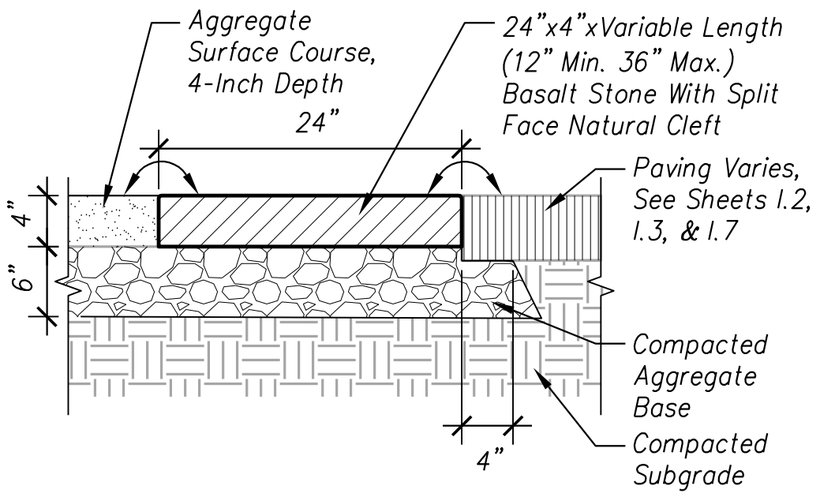

STONE MASONRY, FLUSH BASALT CURB
SCALE: 1" = 1'-0"

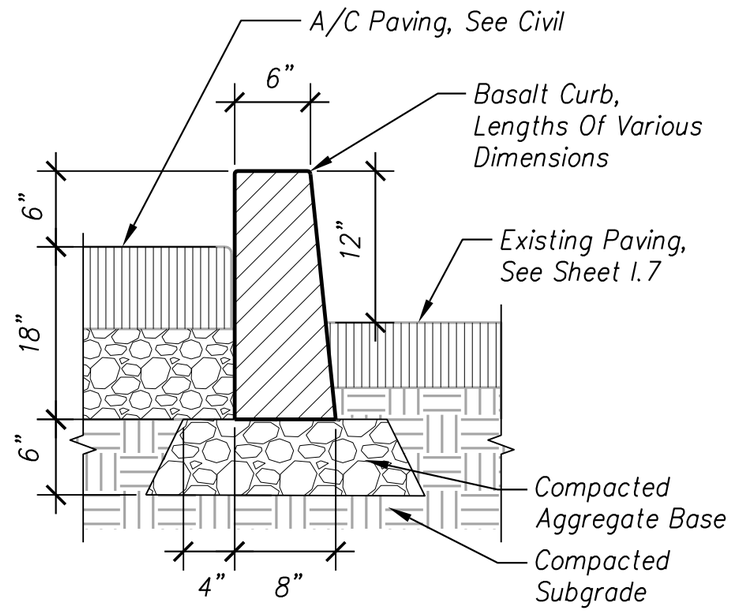

CURB, STONE, TYPE 2, 18" DEPTH
SCALE: 1" = 1'-0"

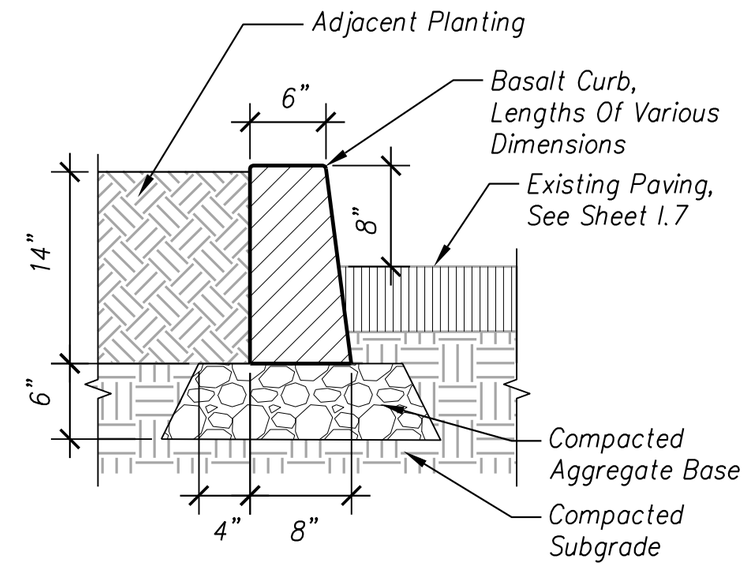

CURB, STONE, TYPE 2, 14" DEPTH
SCALE: 1" = 1'-0"

NOTE:
Surface elevation deviation to be less than 1/2" vertical.

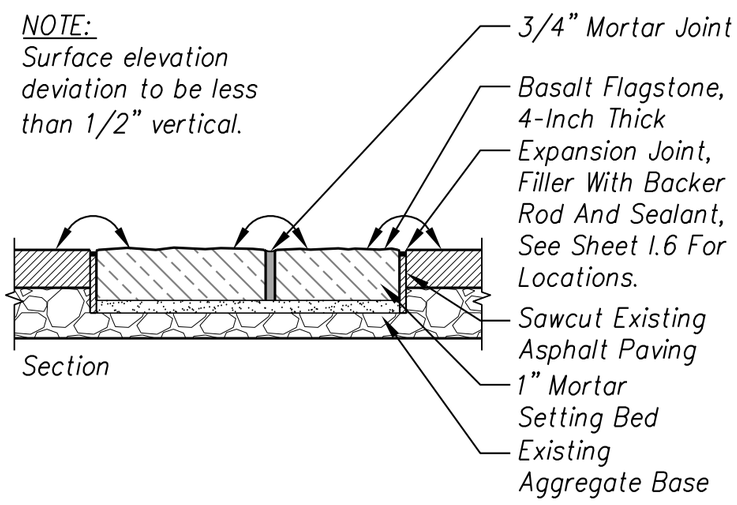

STONE MASONRY, BASALT FLAGSTONE
SCALE: 1" = 1'-0"

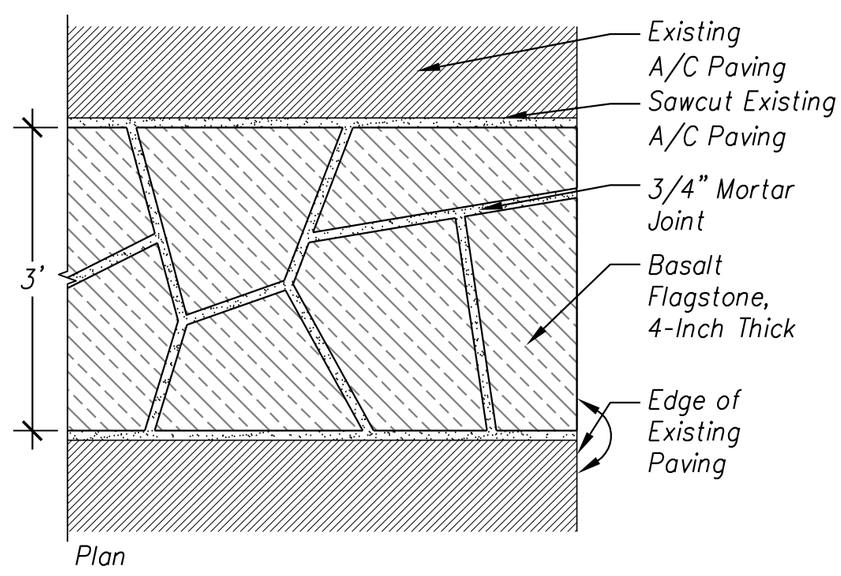

STONE MASONRY, BASALT FLAGSTONE
SCALE: 1" = 1'-0"

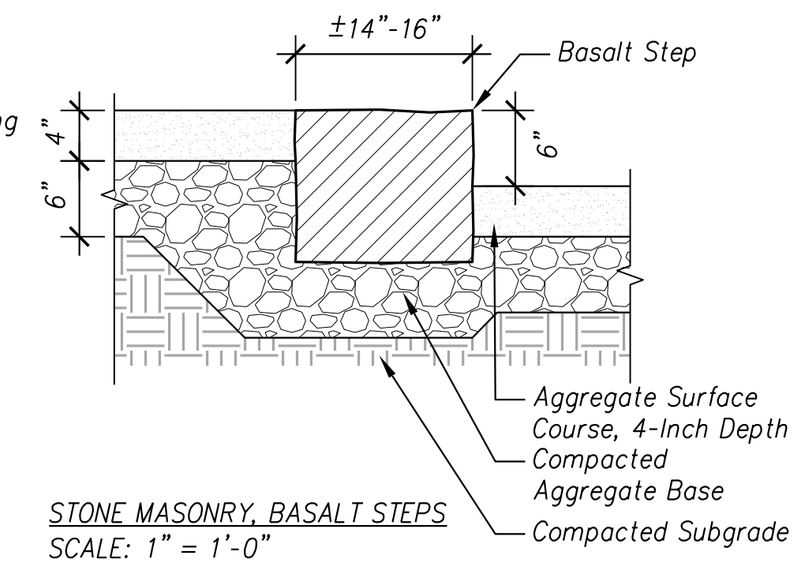

STONE MASONRY, BASALT STEPS
SCALE: 1" = 1'-0"

Details

Stone Masonry

Designed by:
Checked by:
plotted 2/9/2015 5:07 PM by Aaron Maples

STATE	PROJECT	SHEET NUMBER
OR	PFH 163(19)	I.10

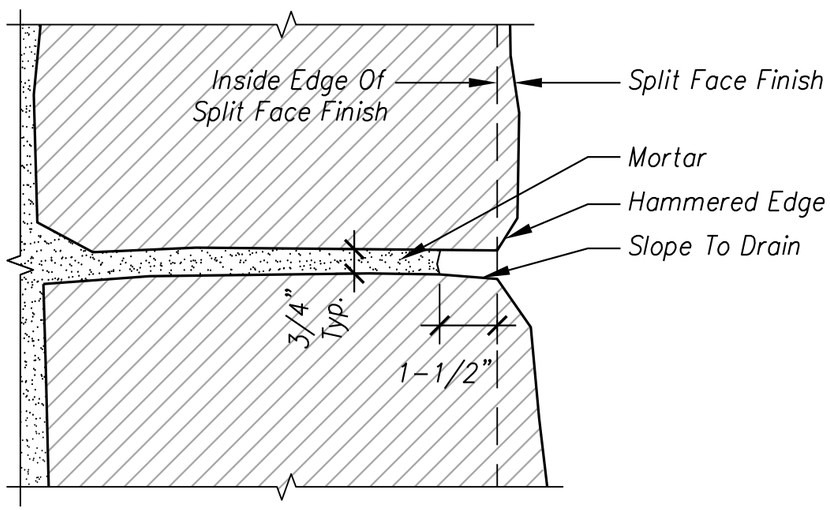

STONE MASONRY, BASALT WALL - MORTAR JOINT ENLARGEMENT
SCALE: 3" = 1'-0"

Notes:
1. No Cap Stones. Mortar

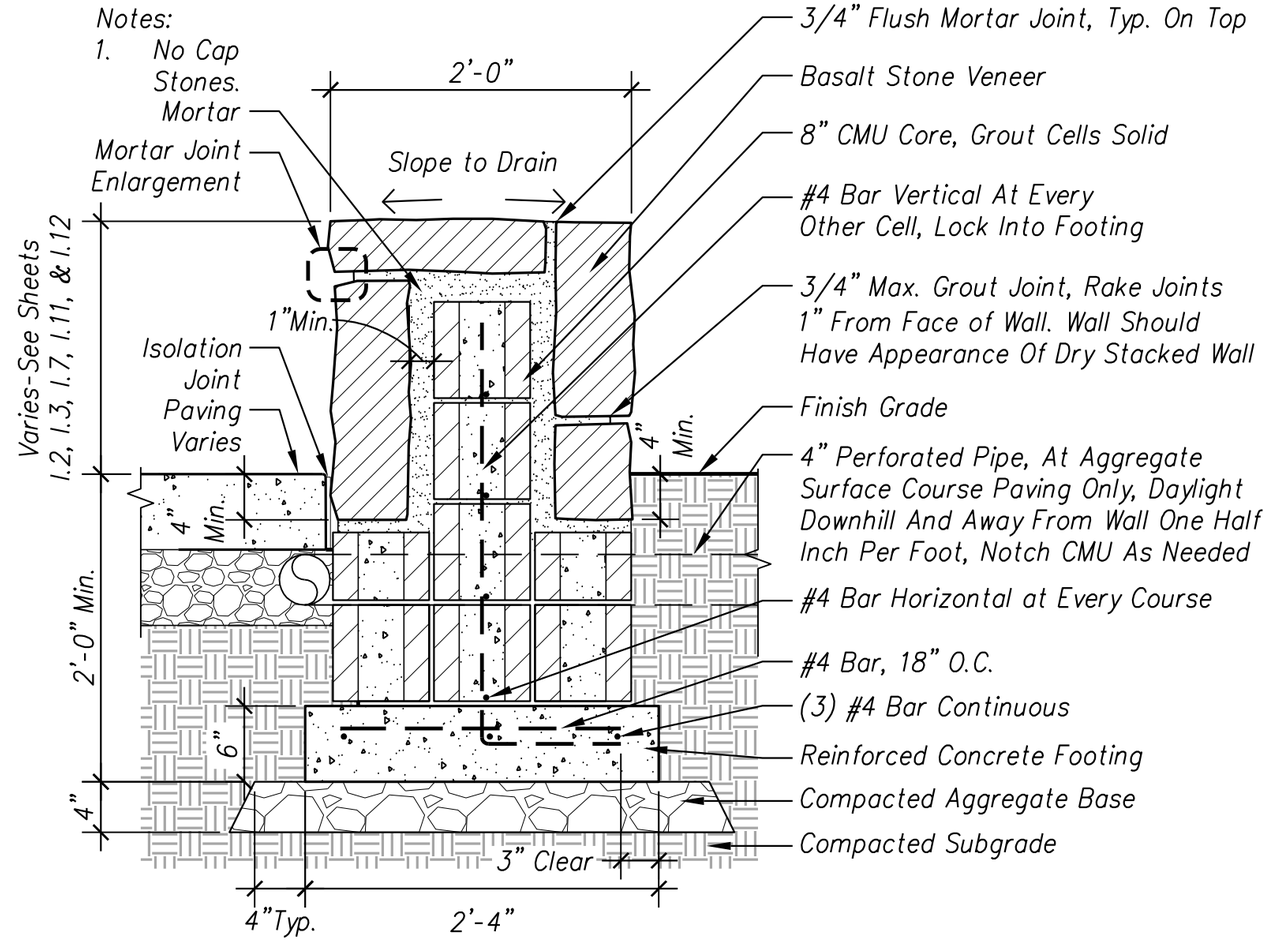

STONE MASONRY, BASALT WALL
SCALE: 1" = 1'-0"

Details

Stone Masonry, Basalt Wall

Designed by:
Checked by:
plotted 2/9/2015 9:45 AM by Aaron Maples

STATE	PROJECT	SHEET NUMBER
OR	PFH 163(19)	I.11

NOTES:

1. All stone to have a split face finish.
2. All mortar joints to be minimum of 1/4" and maximum of 1".

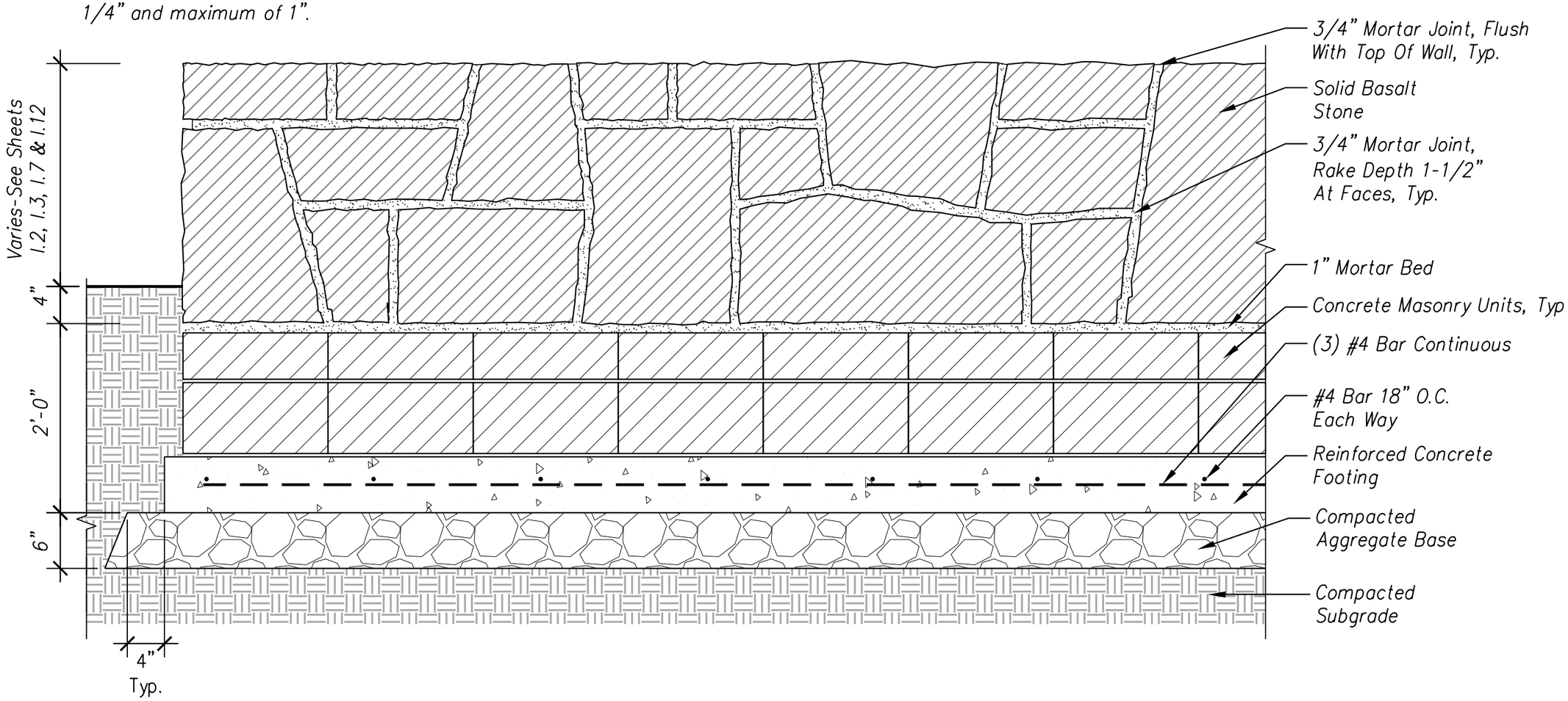

STONE MASONRY, BASALT WALL - ELEVATION
SCALE: 1" = 1'-0"

Details

Stone Masonry, Basalt Wall

Designed by:
Checked by:
plotted 2/9/2015 5:10 PM by Aaron Maples

STATE	PROJECT	SHEET NUMBER
OR	PFH 163(19)	I.12

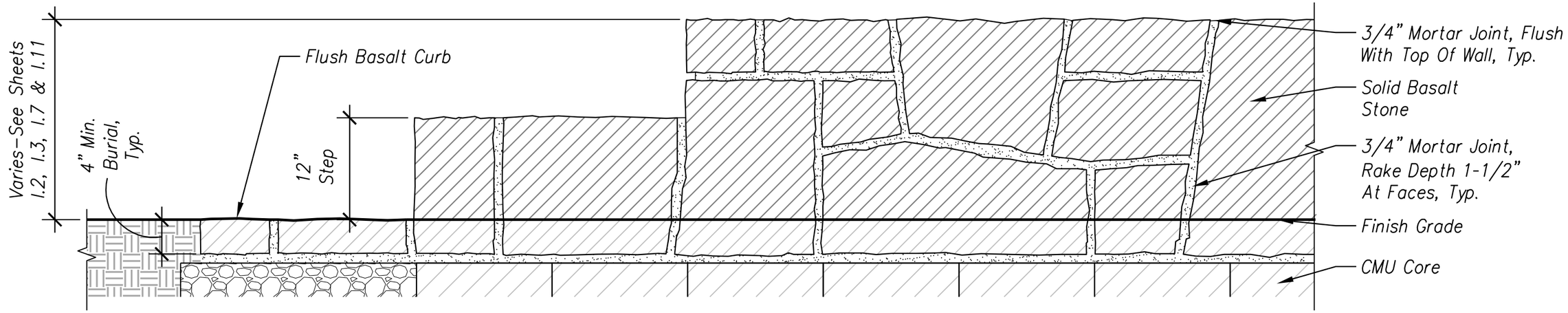

STONE MASONRY, BASALT WALL - ELEVATION
1" = 1'-0"

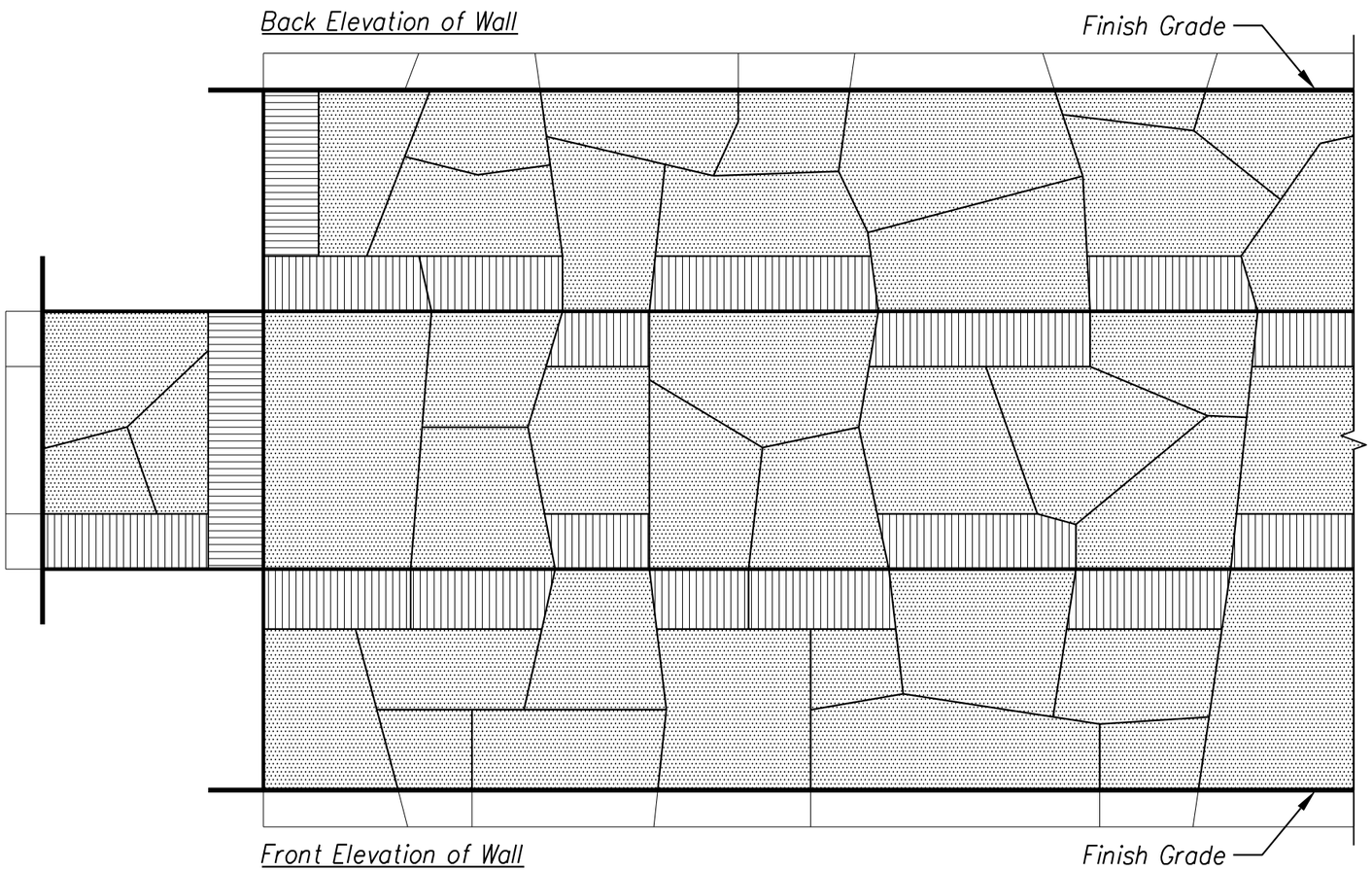

STONE MASONRY, BASALT WALL - STONE LAYOUT
3/4" = 1'-0"

STONE LAYOUT NOTES:

1. No edge stones at bottom of front or back elevation, use only faces at base of front and back of wall.
2. Alternate face and edge stones at top of front and back elevation, do not exceed 2 edge or face stones next to one another.
3. No four-way joints, only maximum of three stone corners shall meet.

OK: NOT OK:

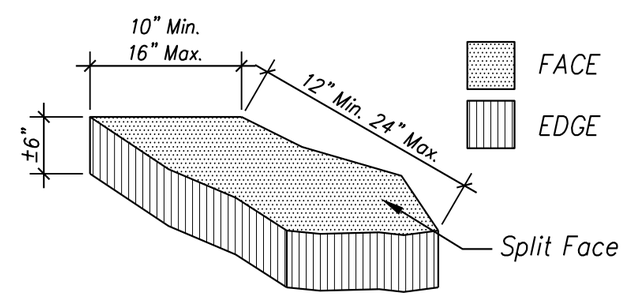

Details

Stone Masonry, Basalt Wall

Designed by:
Checked by:
plotted 2/9/2015 9:46 AM by Aaron Maples

STATE	PROJECT	SHEET NUMBER
OR	PFH 163(19)	I.13

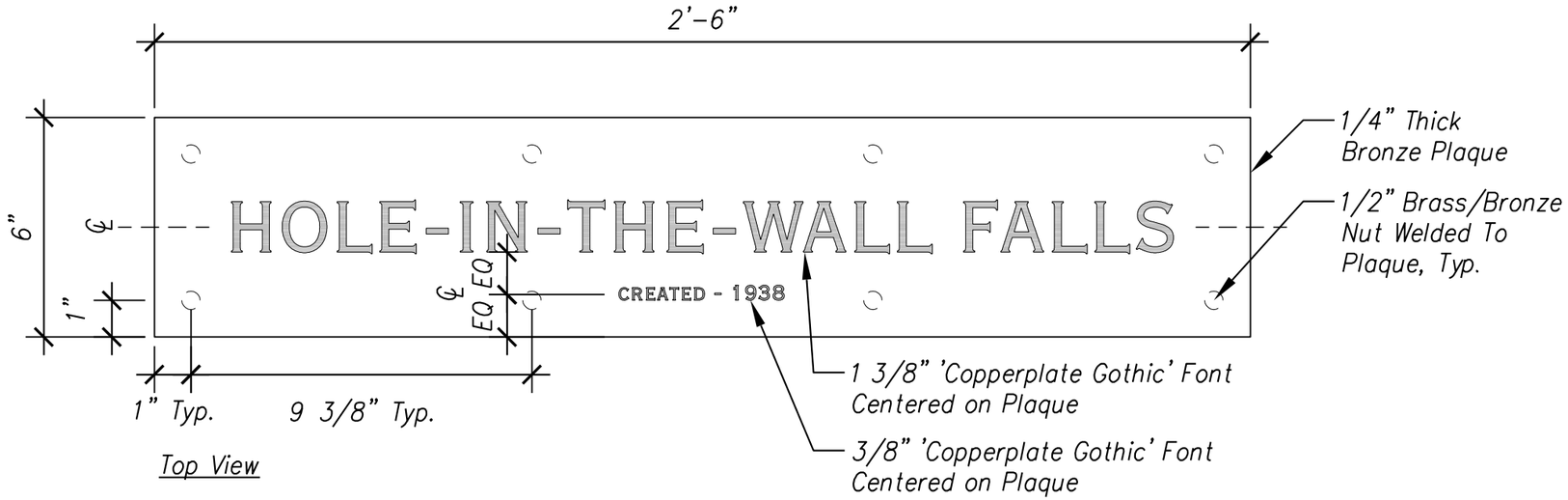

Top View

STONE MASONRY, BRONZE SIGN
3" = 1'-0"

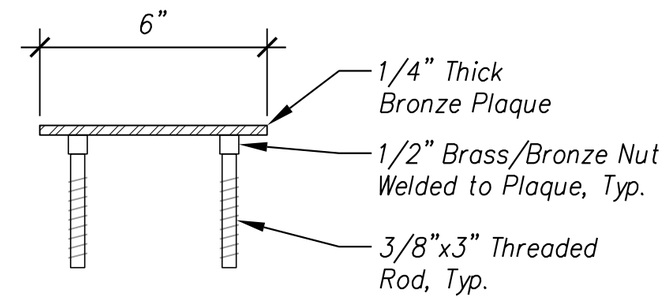

Section

NOTE:
Provide Shop Drawings For Review And Approval By CO Prior to Fabrication.

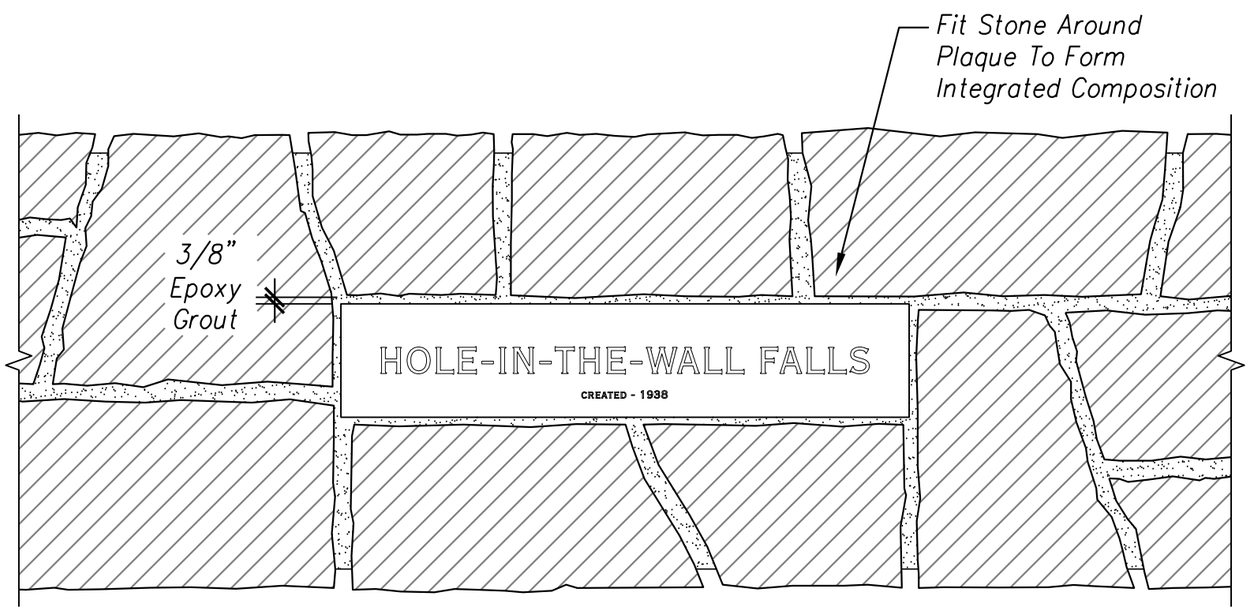

Top View

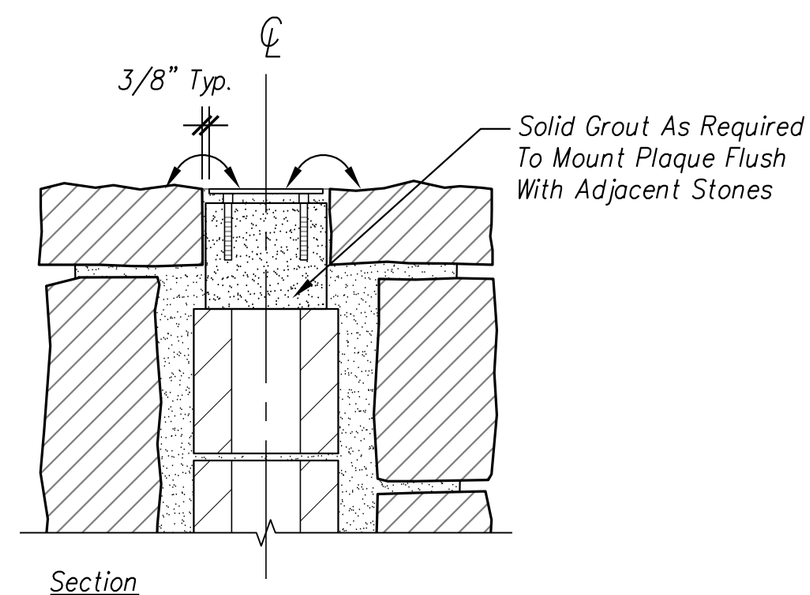

Section

STONE MASONRY, BRONZE SIGN - INSTALLATION
1 1/2" = 1'-0"

Details

Stone Masonry, Bronze Sign

Designed by:
Checked by:
plotted 2/9/2015 9:46 AM by Aaron Maples

STATE	PROJECT	SHEET NUMBER
OR	PFH 163(19)	I.14

NOTE:
Set Basalt Pillar So All Top Of Pillar Grades Are At Same Elevation.

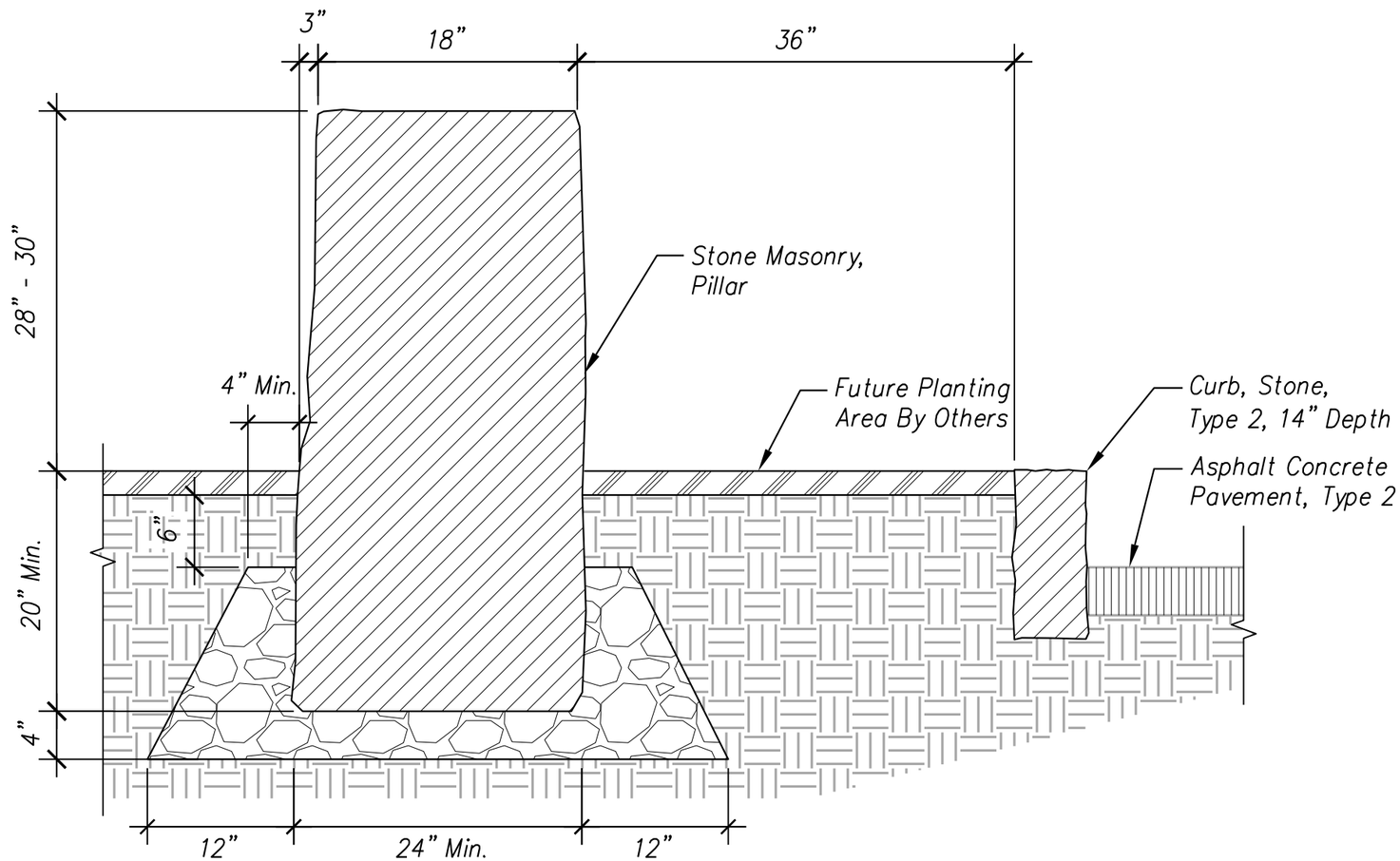

STONE MASONRY, PILLAR
SCALE: 1" = 1'-0"

Details

Stone Masonry, Pillar

Checked by:
Designed by:
plotted 2/9/2015 5:12 PM by Aaron Maples

STATE	PROJECT	SHEET NUMBER
OR	PFH 163(19)	I.15

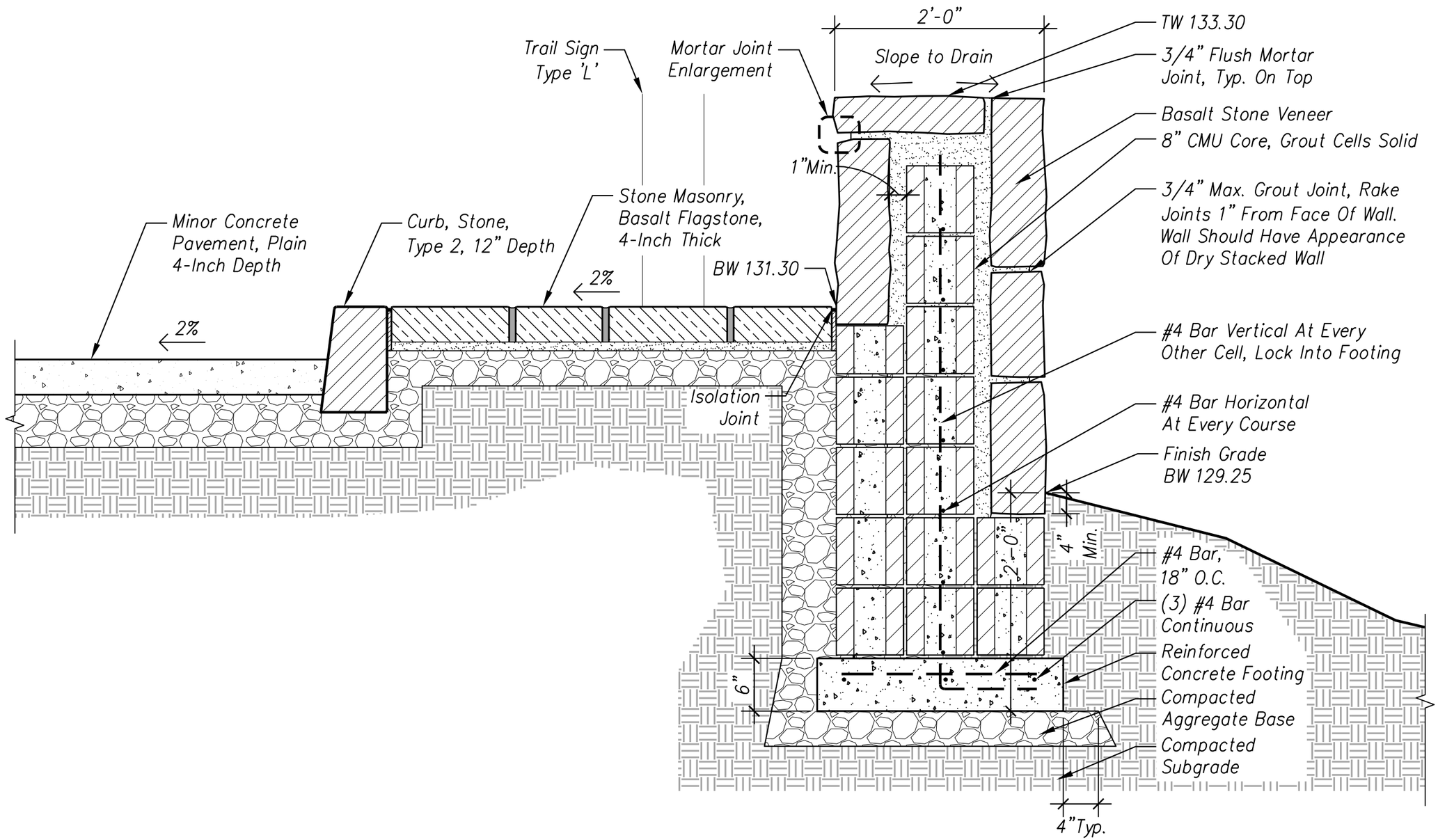

STONE MASONRY, RETAINING WALL AT STARVATION CREEK TRAILHEAD
SCALE: 1" = 1'-0"

Details

Stone Masonry, Retaining Wall

Designed by:
Checked by:
plotted 2/9/2015 9:47 AM by Aaron Maples

STATE	PROJECT	SHEET NUMBER
OR	PFH 163(19)	I.16

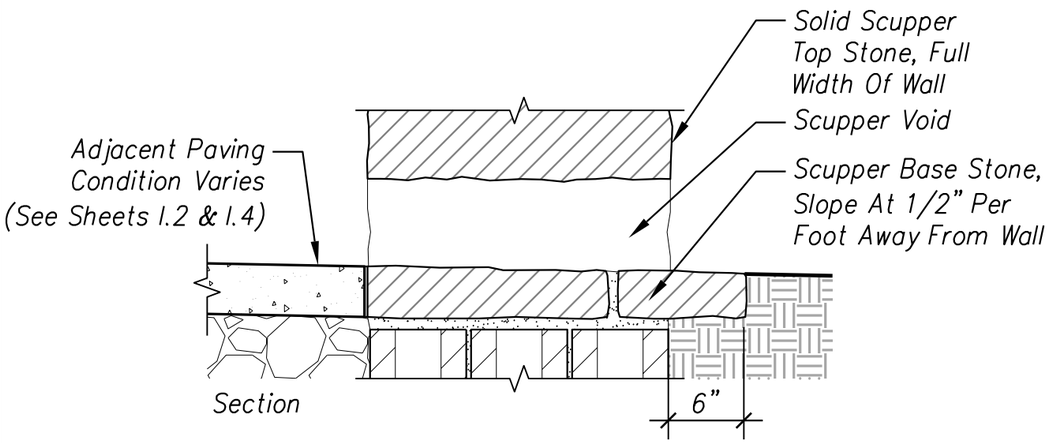

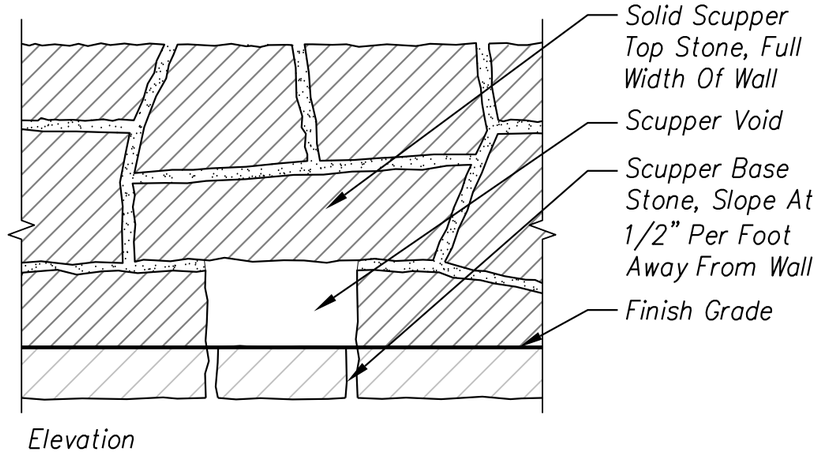

STONE MASONRY, SCUPPER
SCALE: 1" = 1'-0"

Notes:
1. No Cap Stones. Mortar

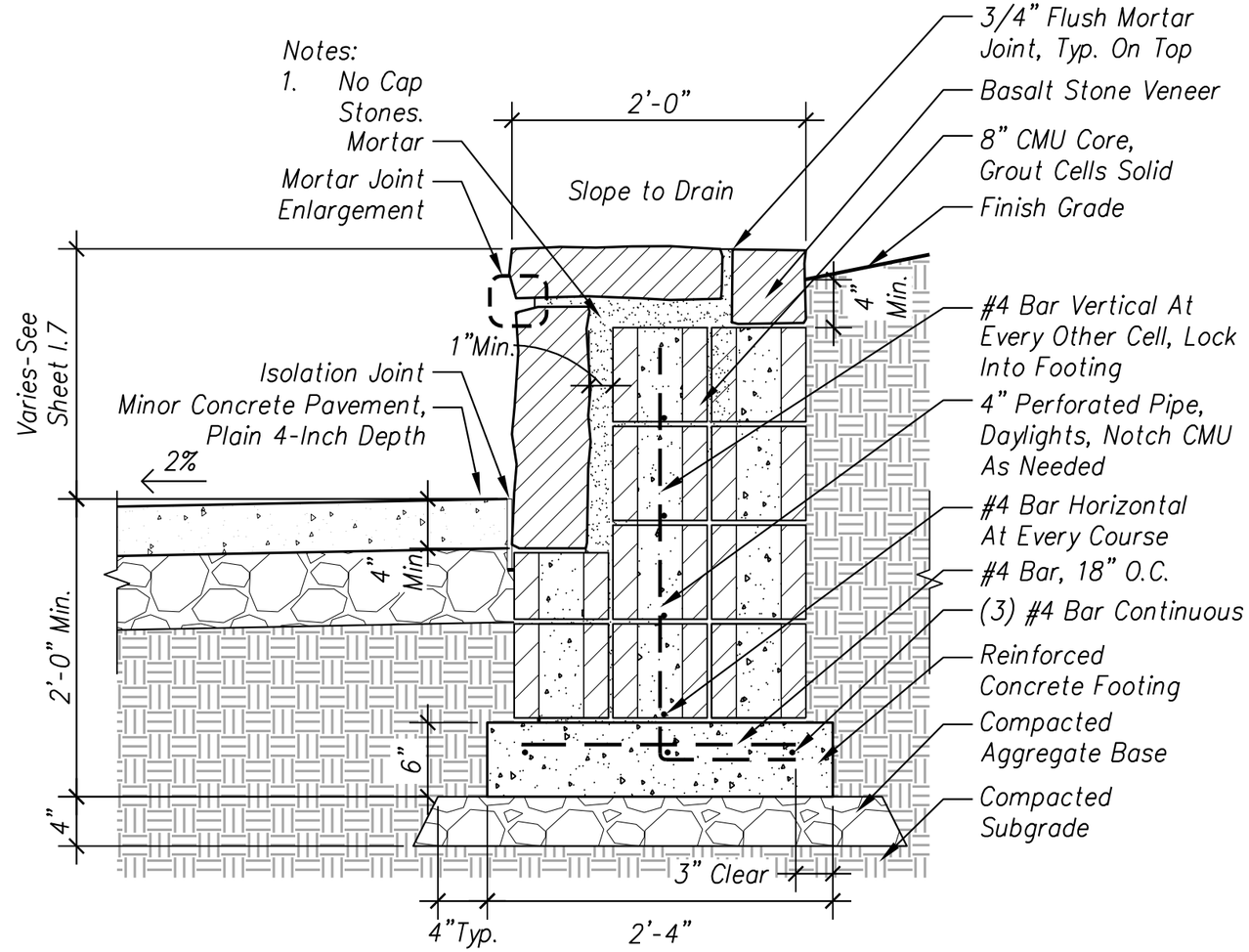

STONE MASONRY, RETAINING WALL AT HOLE-IN-THE-WALL FALLS
SCALE: 1" = 1'-0"

Details

Stone Masonry, Retaining Wall At Hole-in-the-Wall Falls

Checked by:
Designed by:
plotted 2/9/2015 5:15 PM by Aaron Maples

STATE	PROJECT	SHEET NUMBER
OR	PFH 163(19)	I.17

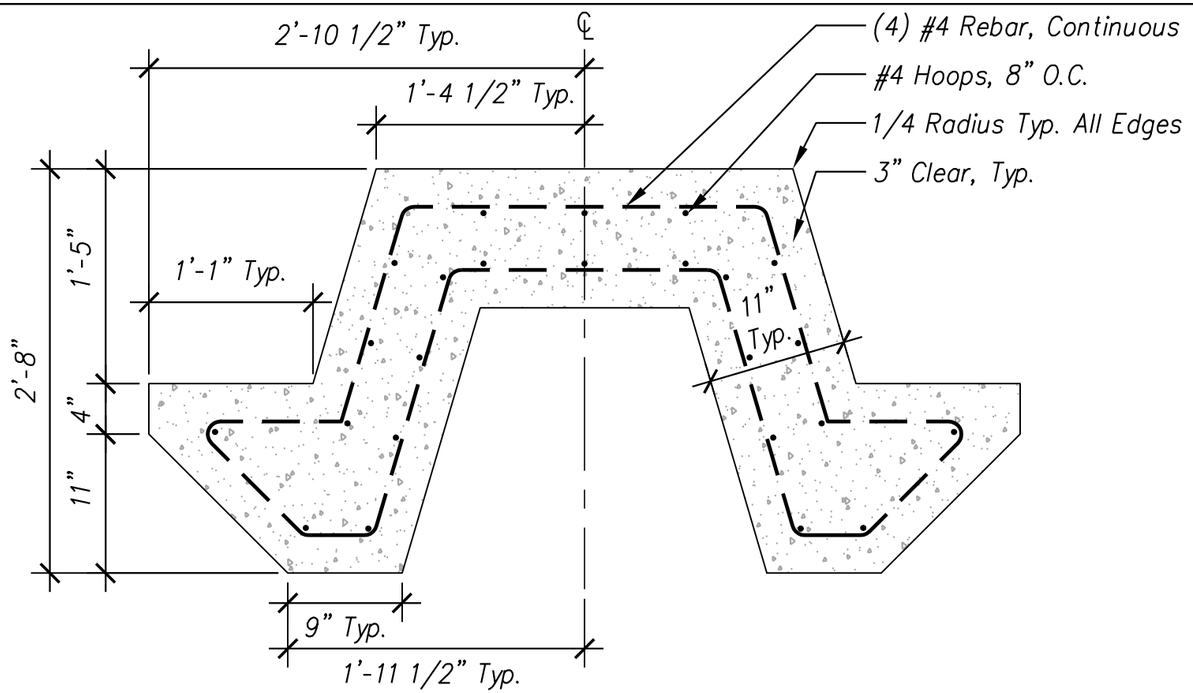

FURNITURE, PICNIC TABLE - PRECAST CONCRETE BASE
SCALE: 1" = 1'-0"

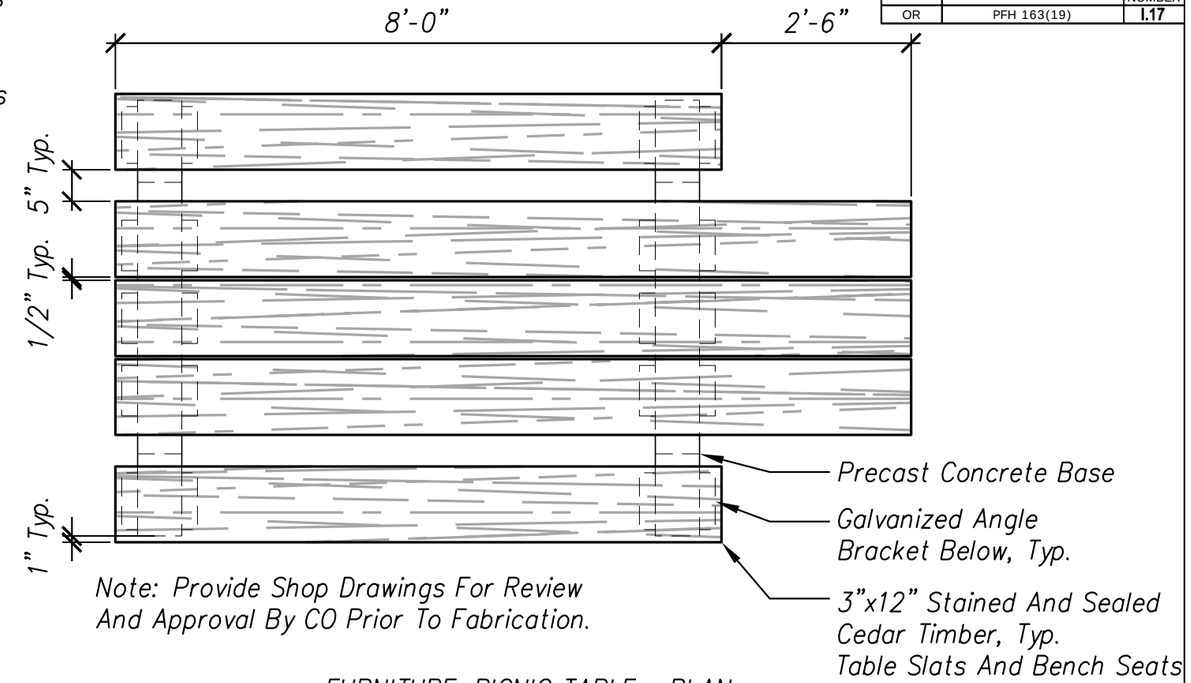

Note: Provide Shop Drawings For Review And Approval By CO Prior To Fabrication.

FURNITURE, PICNIC TABLE - PLAN
SCALE: 1/2" = 1'-0"

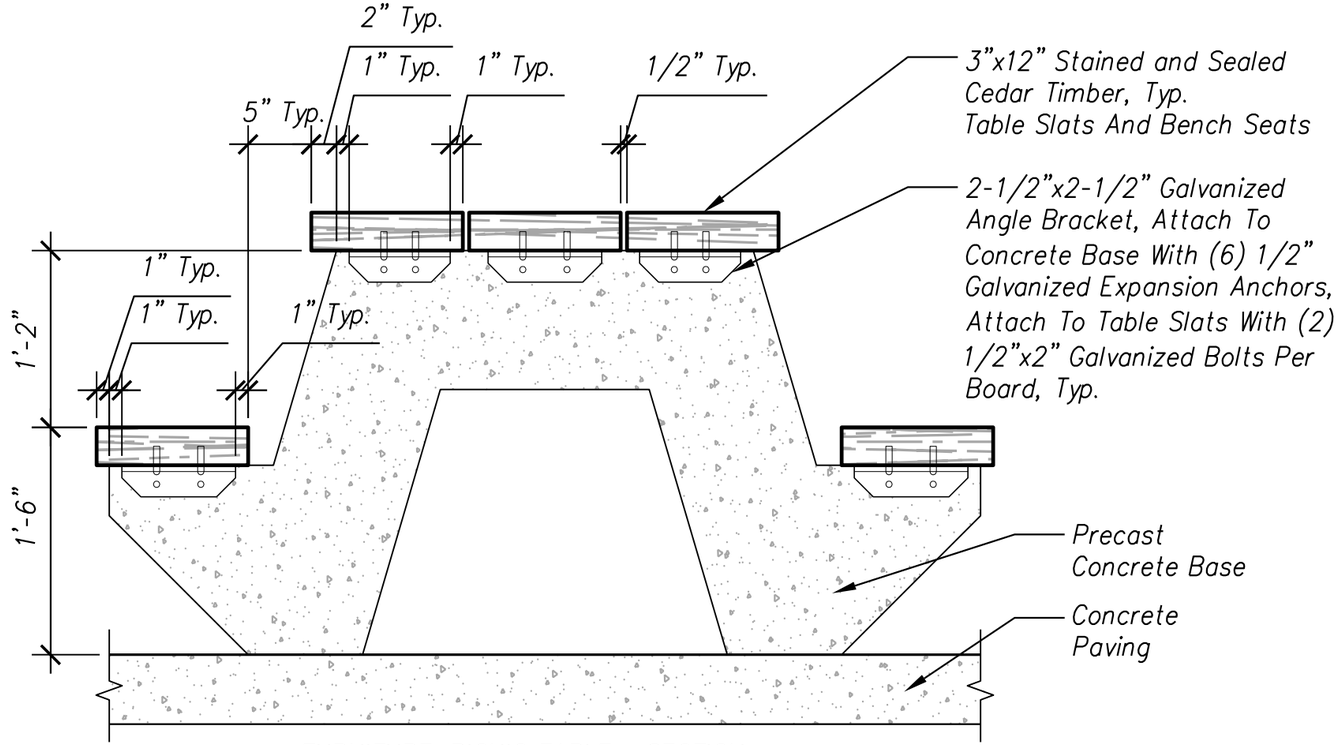

FURNITURE, PICNIC TABLE - SECTION
SCALE: 1" = 1'-0"

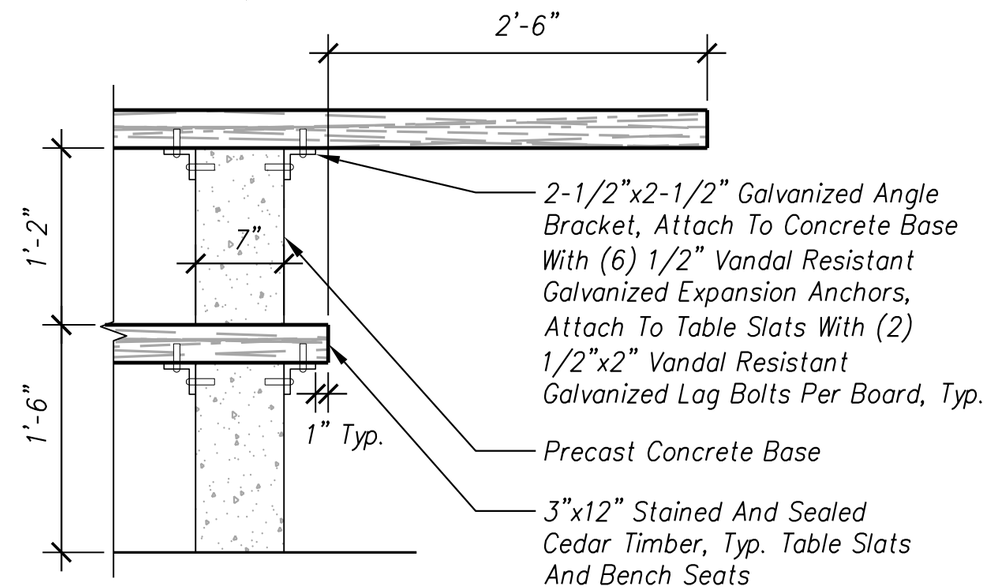

FURNITURE, PICNIC TABLE - SECTION
SCALE: 1" = 1'-0"

Details

Furniture, Picnic Table

Checked by:
Designed by:
plotted 2/9/2015 9:49 AM by Aaron Maples

STATE	PROJECT	SHEET NUMBER
OR	PFH 163(19)	I.18

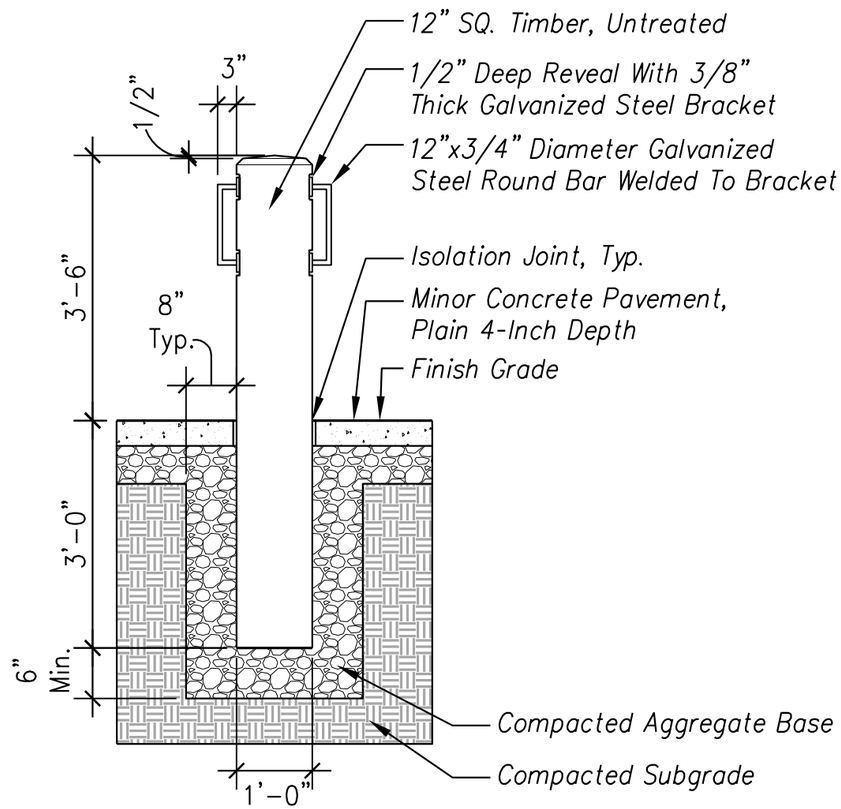

Side View

FIXTURE, BICYCLE STORAGE RACK
SCALE: 1/2" = 1'-0"

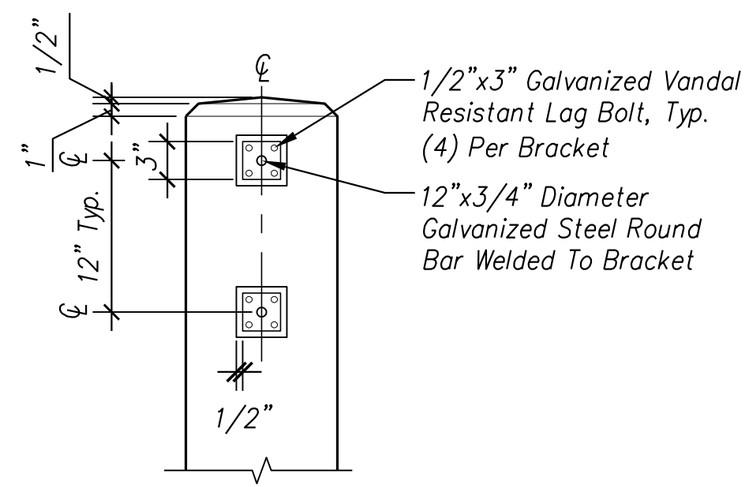

Front View

FIXTURE, BICYCLE STORAGE RACK
SCALE: 1" = 1'-0"

Details

Fixture, Bicycle Storage Rack

Checked by:

Designed by:

plotted 2/9/2015 5:18 PM by Aaron Maples

STATE	PROJECT	SHEET NUMBER
OR	PFH 163(19)	I.19

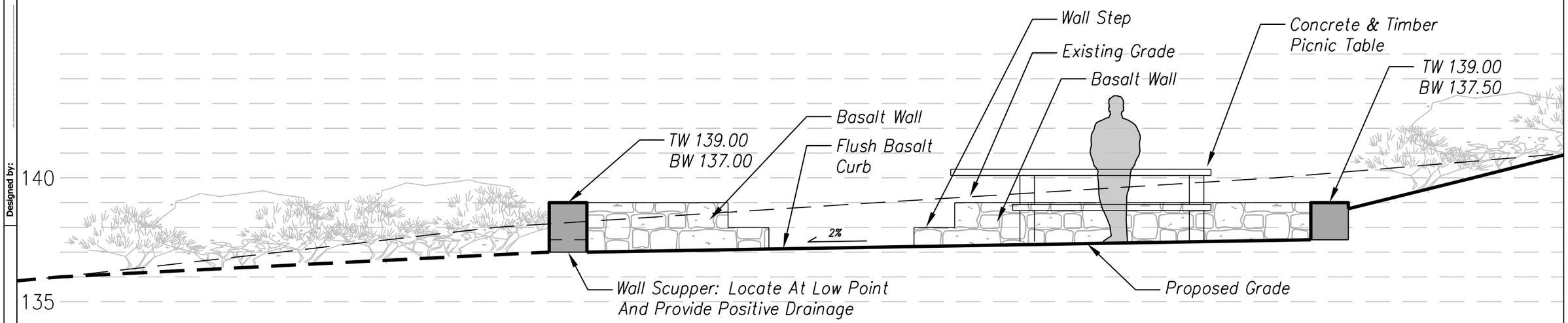

PICNIC AREA SECTION
Scale: 1/4" = 1'-0"

Details

Hole-in-the-Wall Falls Section, Picnic Area

Checked by: --/---

Designed by: --/---

plotted 2/9/2015 9:50 AM by Aaron Maples

STATE	PROJECT	SHEET NUMBER
OR	PFH 163(19)	J.1

TEMPORARY TRAFFIC CONTROL QUANTITIES			
Item	Description	Unit	Quantity
63502-0100	TEMPORARY TRAFFIC CONTROL, ARROW BOARD, TYPE A	EACH	1
63502-0600	TEMPORARY TRAFFIC CONTROL, BARRICADE TYPE 3	EACH	1
63502-1300	TEMPORARY TRAFFIC CONTROL, DRUM	EACH	50
63502-2100	TEMPORARY TRAFFIC CONTROL, CRASH CUSHION	EACH	1
63503-0400	TEMPORARY TRAFFIC CONTROL, CONCRETE BARRIER	LNFT	2130
63507-0700	TEMPORARY TRAFFIC CONTROL, TRAFFIC CONTROL SUPERVISOR	DAY	80

ITEM 63504-1000 TEMPORARY TRAFFIC CONTROL CONSTRUCTION SIGN					
SIGN NO.	MUTCD/ODOT REF. NO.	SIGN LEGEND	SIGN SIZE	NUMBER OF SIGNS	QUANTITY (SQFT)
1	SPECIAL	YOUR TAX DOLLARS AT WORK	96" x 48"	1	32.0
2	W20-1	ROAD WORK 1 MILE	48" x 48"	1	16.0
3	R2-6aP	FINES DOUBLE	36" x 24"	1	6.0
4	W20-1	ROAD WORK 1 MILE	36" x 36"	1	9.0
5	R2-6aP	FINES DOUBLE	24" x 18"	1	3.0
6	W20-5R	RIGHT LANE CLOSED 1/2 MILE	48" x 48"	1	16.0
7	W20-5R	RIGHT LANE CLOSED 1/2 MILE	36" x 36"	1	9.0
8	W4-2R	RIGHT LANE ENDS	48" x 48"	1	16.0
9	W4-2R	RIGHT LANE ENDS	36" x 36"	1	9.0
10	E5-2	EXIT OPEN	48" x 36"	1	6.0
11	G20-2	END ROAD WORK	48" x 24"	1	8.0
				Totals	130

PRELIMINARY
NOT FOR CONSTRUCTION

TABULATION OF TEMPORARY TRAFFIC CONTROL QUANTITIES

STATE	PROJECT	SHEET NUMBER
OR	PFH 163(19)	J.2

LEGEND:

- Under Traffic
- Work Space
- Plastic Drums, 65′ Spacing on Taper, 130′ Spacing on Tangent
- Median Barrier
- Impact Attenuator
- 1 / R2-6aP — Sign Number / MUTCD/ODOT Number
- Sign on Temporary Support
- Sequential Arrow Board

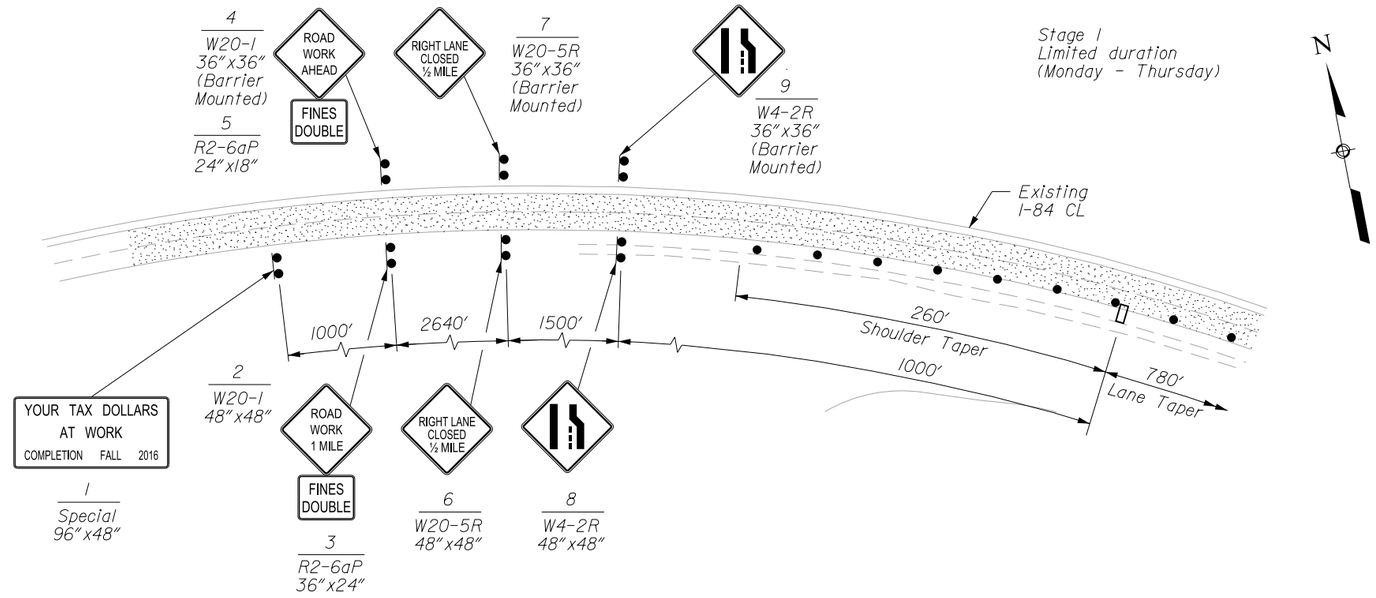

Stage 1
Limited duration
(Monday - Thursday)

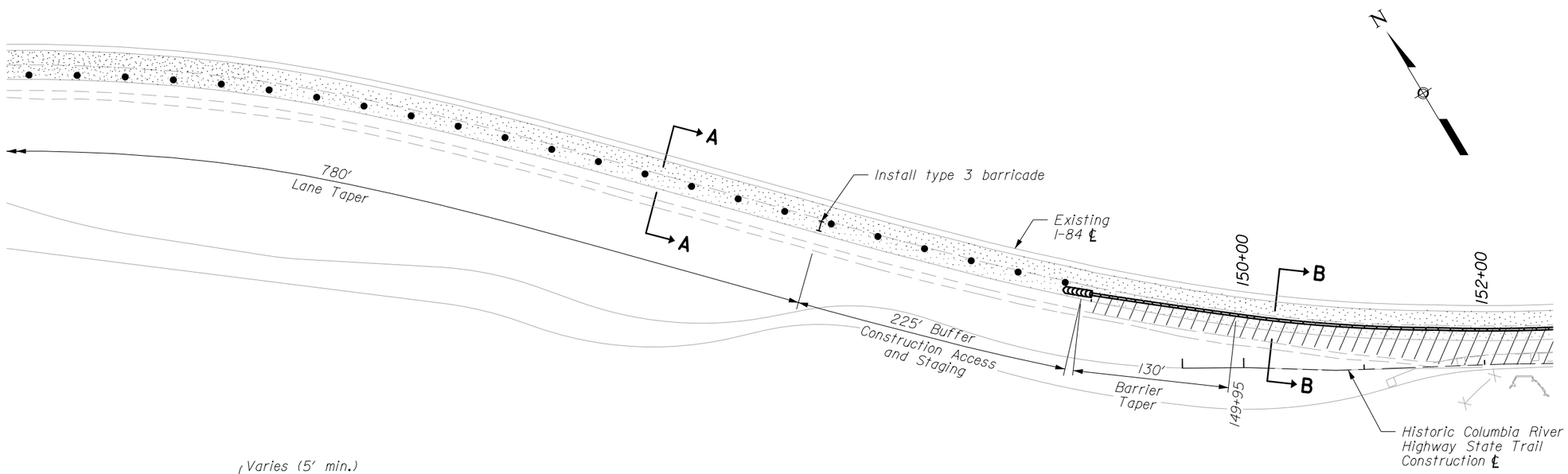

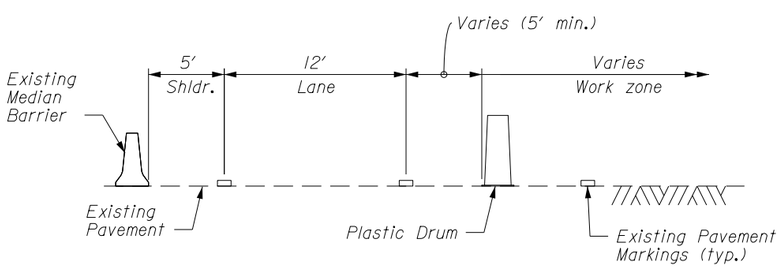

SECTION A-A

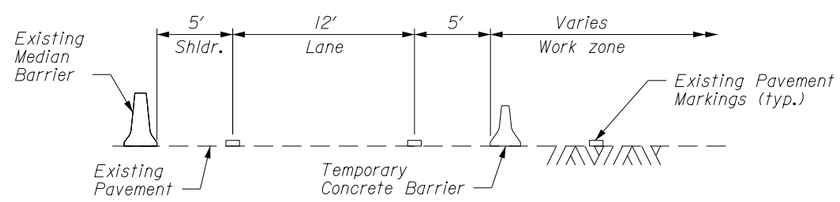

SECTION B-B

NOTE:

1. Do not construct Stage 1 and Stage 2 concurrently.

Scale in feet
50 25 0 50 100 150

PRELIMINARY
NOT FOR CONSTRUCTION

TEMPORARY TRAFFIC CONTROL PLAN SINGLE LANE CLOSURE 1

02/2015 | S. Daleo | 02/2015 | M. Wainscott | 11-Feb-2015 03:37 PM | Designed by: | Checked by: | ...\of16314nb.dgn [Int_ft2D]

STATE	PROJECT	SHEET NUMBER
OR	PFH 163(19)	J.3

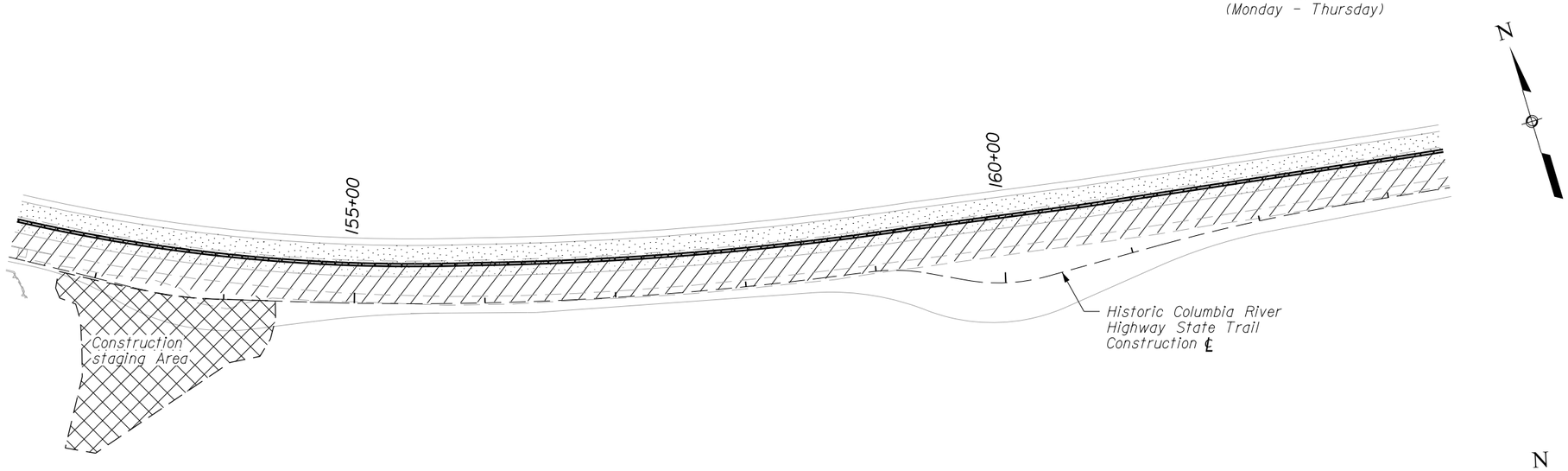

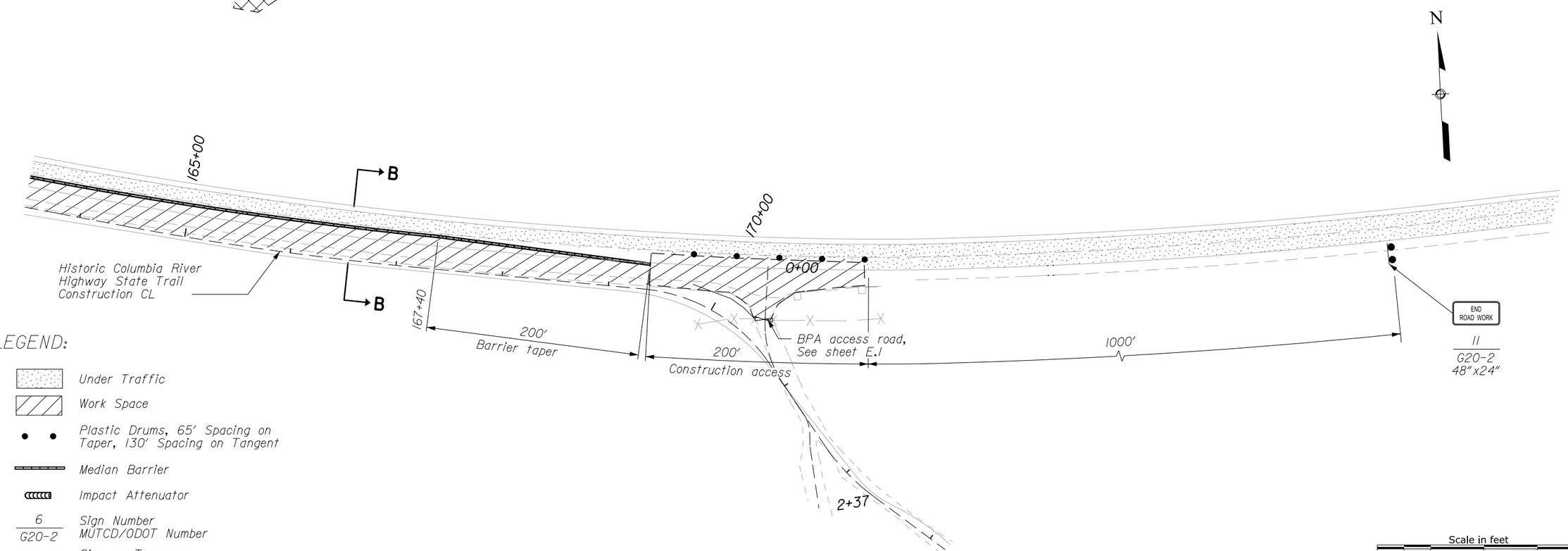

LEGEND:

- Under Traffic
- Work Space
- Plastic Drums, 65′ Spacing on Taper, 130′ Spacing on Tangent
- Median Barrier
- Impact Attenuator
- 6 / G20-2 — Sign Number / MUTCD/ODOT Number
- Sign on Temporary Support

NOTE:

1. For section B-B see sheet J.2

Scale in feet: 50 25 0 50 100 150

PRELIMINARY
NOT FOR CONSTRUCTION

TEMPORARY TRAFFIC CONTROL PLAN SINGLE LANE CLOSURE 1

M. Wainscott 02/2015 | Checked by: S. Daleo 02/2015 | Designed by: 11-Feb-2015 03:37 PM | ...\of16314nc.dgn [int_ft2D]

STATE	PROJECT	SHEET NUMBER
OR	PFH 163(19)	J.4

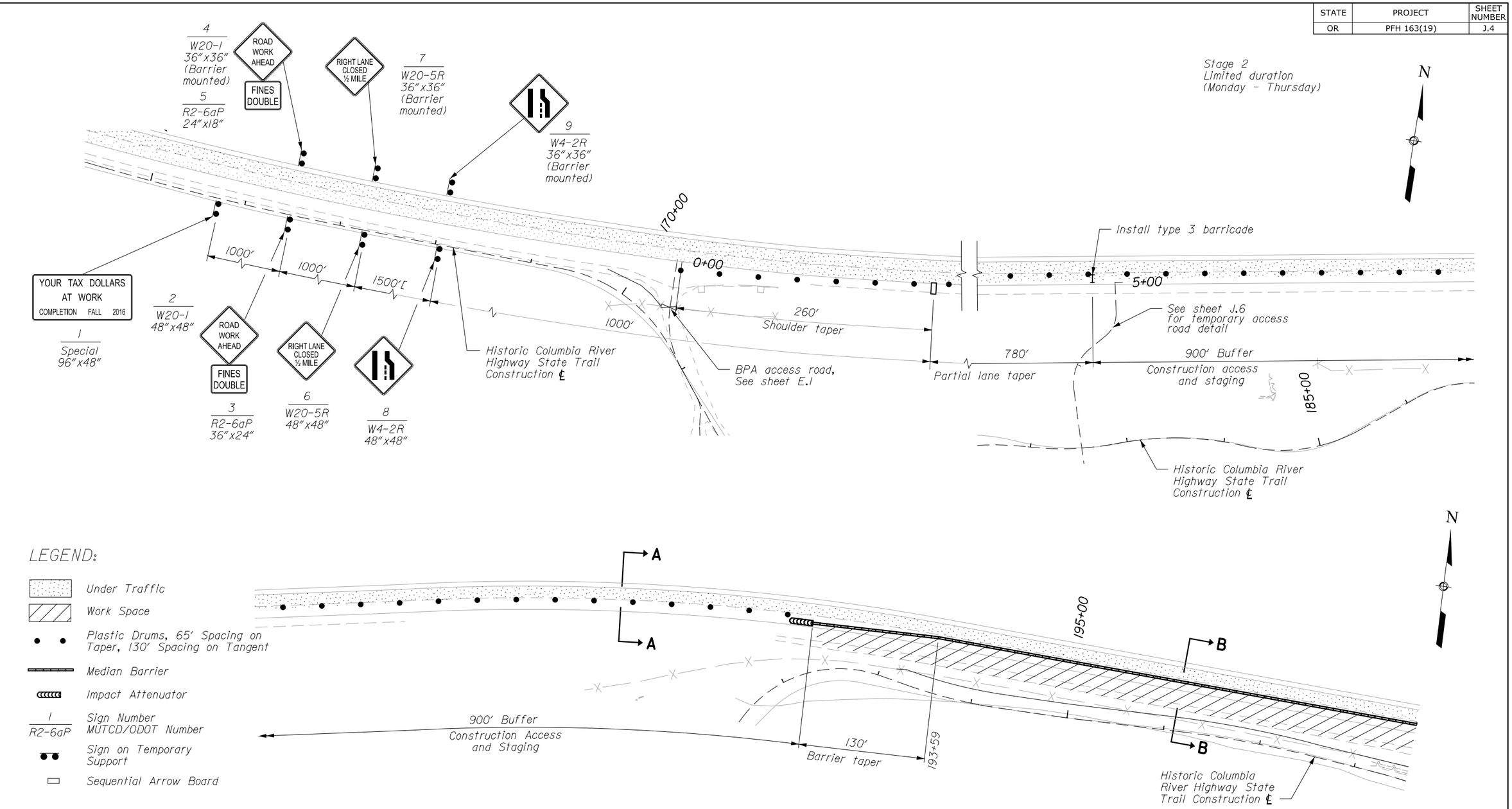

PRELIMINARY
NOT FOR CONSTRUCTION

TEMPORARY TRAFFIC CONTROL PLAN SINGLE LANE CLOSURE 2

Designed by: M. Wainscott 02/2015
Checked by: S. Daleo 02/2015
11-Feb-2015 03:38 PM
...\of16314nd.dgn [Int_ft2D]

STATE	PROJECT	SHEET NUMBER
OR	PFH 163(19)	J.5

Stage 2
Limited duration
(Monday - Thursday)

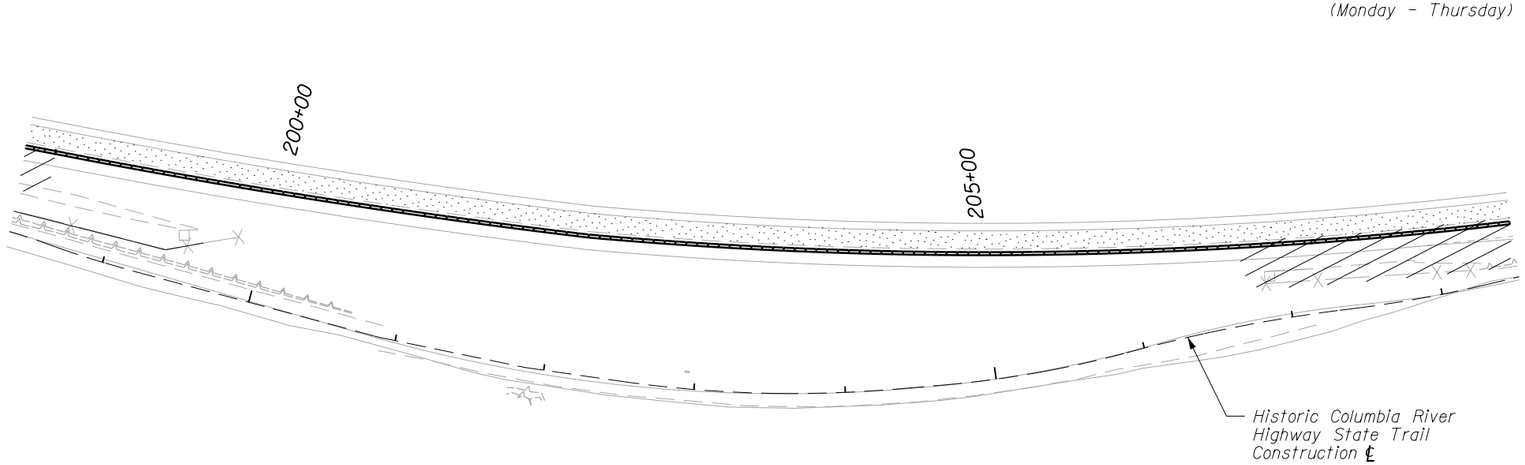

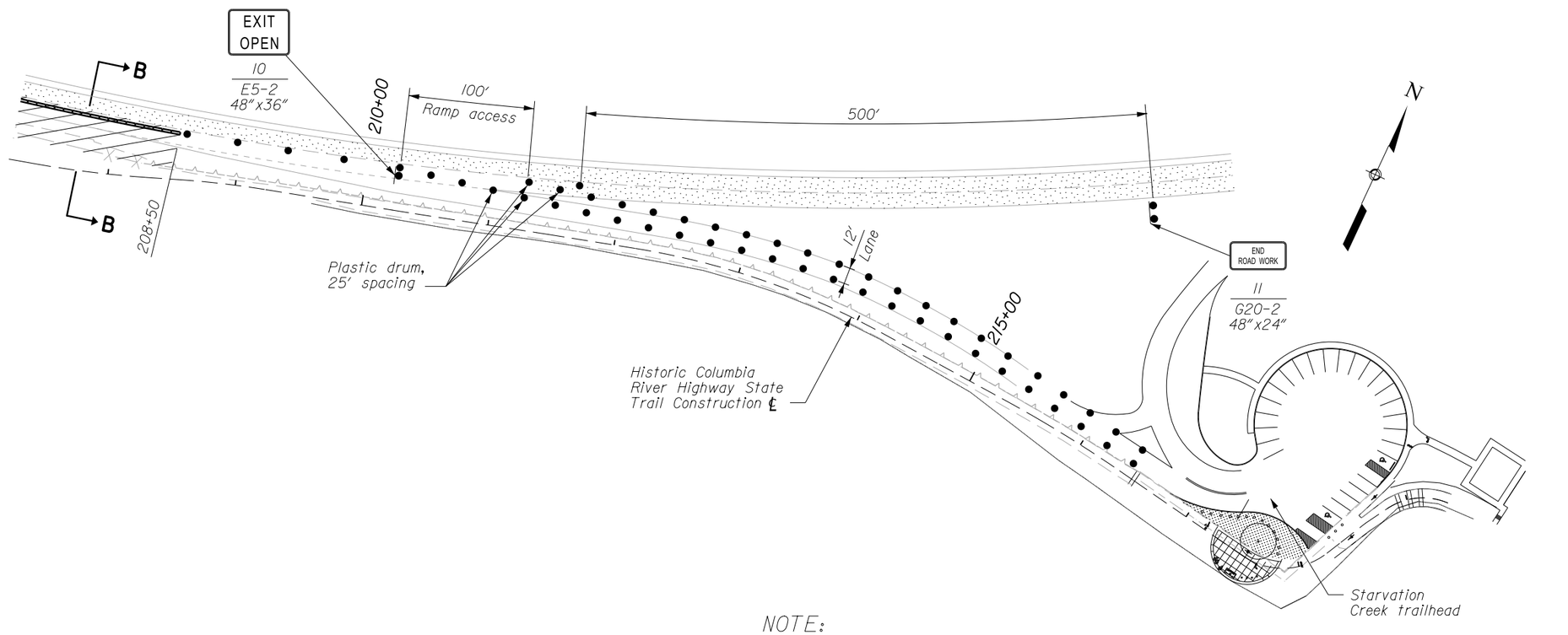

LEGEND:

- Under Traffic
- Work Space
- Plastic Drums, 65' Spacing on Taper, 130' Spacing on Tangent
- Median Barrier
- Impact Attenuator
- 6 / G20-2 — Sign Number / MUTCD/ODOT Number
- Sign on Temporary Support

NOTE:

1. For section B-B, see sheet J.2.
2. Maintain a minimum of 10 available parking spaces during construction.

Scale in feet
50 25 0 50 100 150

PRELIMINARY
NOT FOR CONSTRUCTION

TEMPORARY TRAFFIC CONTROL PLAN SINGLE LANE CLOSURE 2

Designed by: M. Wainscott 02/2015
Checked by: S. Daleo 02/2015
11-Feb-2015 03:38 PM
...\of16314ne.dgn [Int_ft2D]

STATE	PROJECT	SHEET NUMBER
OR	PFH 163(19)	J.6

CURVE DATA TABLE				
CURVE#	Δ	T	L	R
C39	52°57'27"	14.94'	27.73'	30'
C40	58°21'31"	25.13'	45.83'	45'

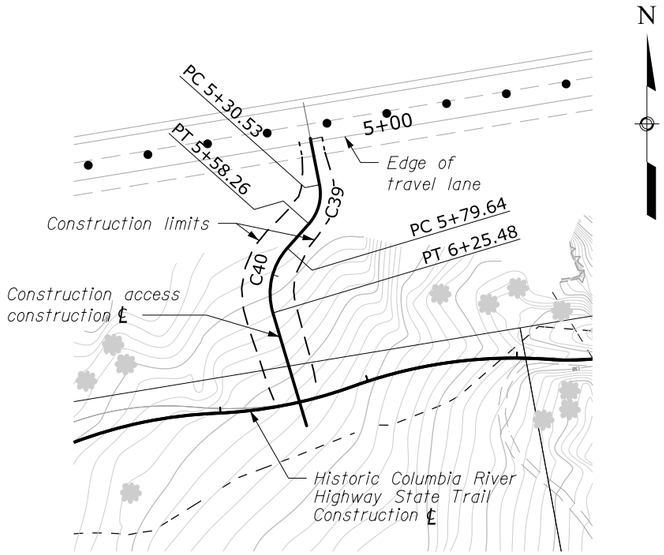

CONSTRUCTION ACCESS ROAD AT 182+53.05
PLAN

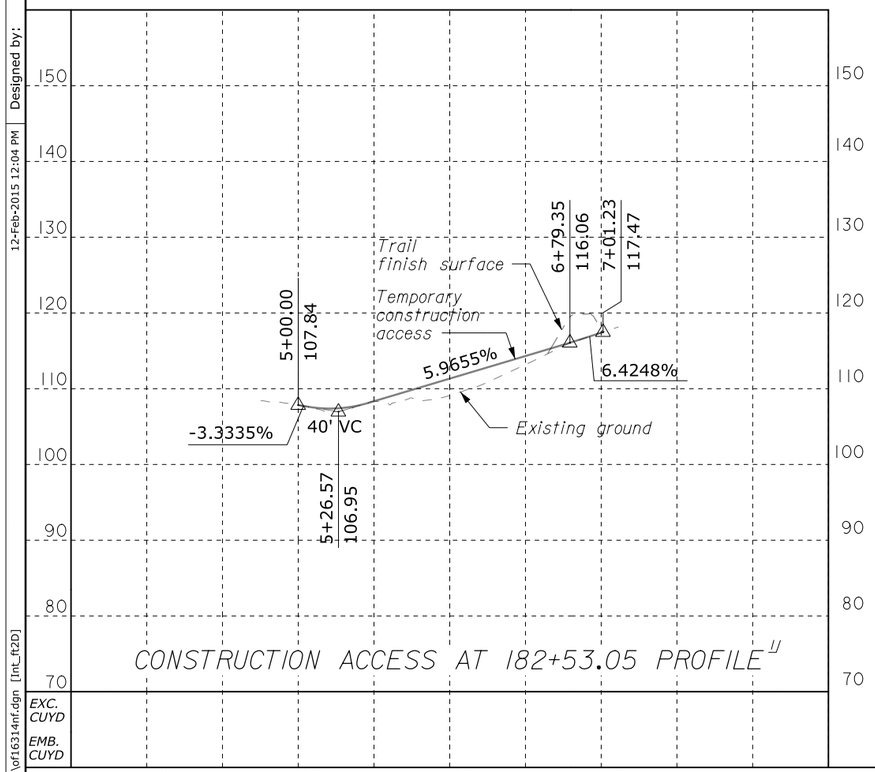

CONSTRUCTION ACCESS AT 182+53.05 PROFILE 1/

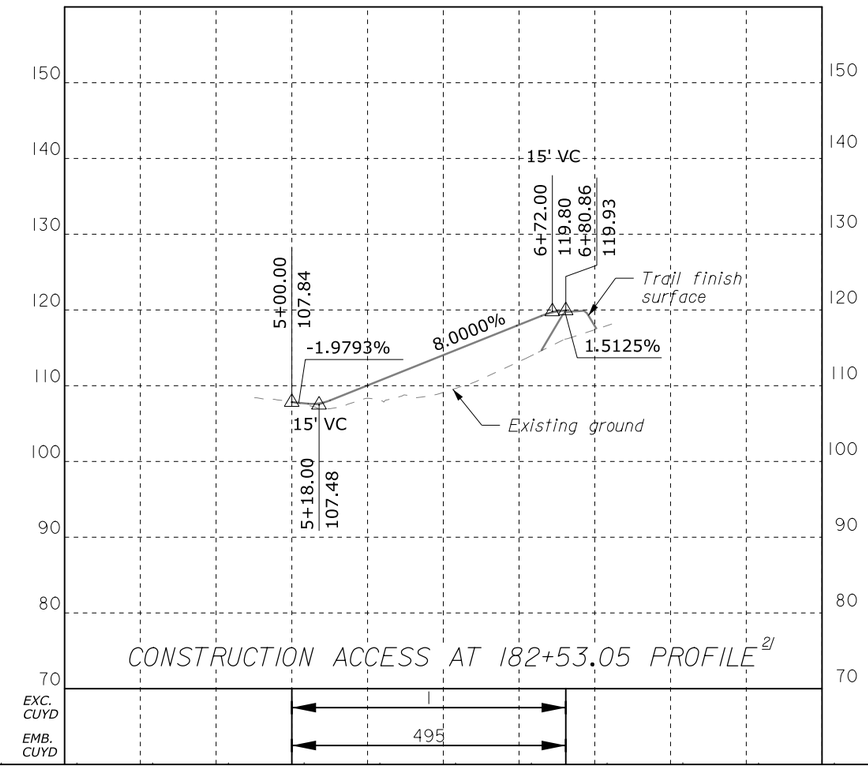

CONSTRUCTION ACCESS AT 182+53.05 PROFILE 2/

FOOTNOTE:

1/ Access Rd profile for construction activities prior to trail finish surface contruction.

2/ Access Rd profile for construction activities after to trail finish surface contruction.

PRELIMINARY
NOT FOR CONSTRUCTION

TEMPORARY TRAFFIC CONTROL PLAN ACCESS ROAD

Designed by: M. Wainscott 02/2015
Checked by: S. Daleo 02/2015
12-Feb-2015 12:04 PM
...\of16314nf.dgn [Int_ft2D]

STATE	PROJECT	SHEET NUMBER
OR	PFH 163(19)	K.1

PERMANENT SIGNS

LOCATION	SIGN NO.	MUTCD/ODOT REF. NO.	SIGN LEGEND	SIGN SIZE	Item 20301-2400 REMOVAL OF SIGN (EACH)	Item 63302-0000 SIGN SYSTEM (SQFT)	Item 63305-1200 POSTS, STEEL, W8 X 21 (LNFT)	Item 63316-1000 REMOVE AND RESET SIGN (EACH)
151+95, Center	1	R11-2	TRAIL CLOSED	24 x 18		3.00		
154+00 LT.	2	W8-3	PAVEMENT ENDS	18 X 18		2.25		
154+00 LT.	3	W16-2aP	200 FT	18 X 9		1.13		
167+80 LT.	4	D10-2	MILE 54	12 x 36	1			
167+80 LT.	4	D10-2	MILE 54	12 x 36		3.00		
184+00 LT.	5	Type A.2	STATE TRAIL (US 30 Shield)	13 x 15.5		1.40		
184+00 LT.	6	Type B	(Arrows)	13 x 4.5		0.41		
184+00 LT.	7	Type B	GORGE TRAIL 400 STARVATION RIDGE (Arrow)	13 x 7.5		0.68		
184+00 LT.	8	Type B	GORGE TRAIL 400 STARVATION RIDGE (Arrow)	13 x 7.5		0.68		
203+90 LT.	5	Type A.2	STATE TRAIL (US 30 Shield)	13 x 15.5		1.40		
203+90 LT.	6	Type B	(Arrows)	13 x 4.5		0.41		
203+90 LT.	9	Type B	GORGE TRAIL 400 MT DEFIANCE (Arrow)	13 x 7.5		0.68		
203+90 LT.	10	Type B	GORGE TRAIL 400 MT DEFIANCE (Arrow)	13 x 7.5		0.68		
206+50 LT.	11	Special	Starvation Creek Trailhead Hist. Col. Riv. Hwy. State Trail/Exit 55/NO TRUCKS	144 x 120 12 x 72 / 12 x 72			40	1
210+17 LT.	12	W13-2	EXIT 25 MPH	24 x 30				1
210+17 LT.	13	R5-1a	WRONG WAY	30 x 18				1
215+17 LT.	13	R5-1a	WRONG WAY	30 x 18				1
215+77 LT.	14	R5-1	DO NOT ENTER	30 x 30				1
216+00 RT.	15	Special	Notice to Clean Shoes					1
218+20 RT.	16	R5-3	NO MOTOR VEHICLES		1			
TOTALS					2	16	40	6

NOTE:

1. Stationing is approximate, field adjust with CO approval as needed.

PRELIMINARY
NOT FOR CONSTRUCTION

PERMANENT TRAFFIC CONTROL QUANTITIES

...\of16314ha.dgn [Int_ft2D] 12-Feb-2015 12:07 PM Designed by: M. Wainscott 02/2015 Checked by: S. Daleo 02/2015

STATE	PROJECT	SHEET NUMBER
OR	PFH 163(19)	K.2

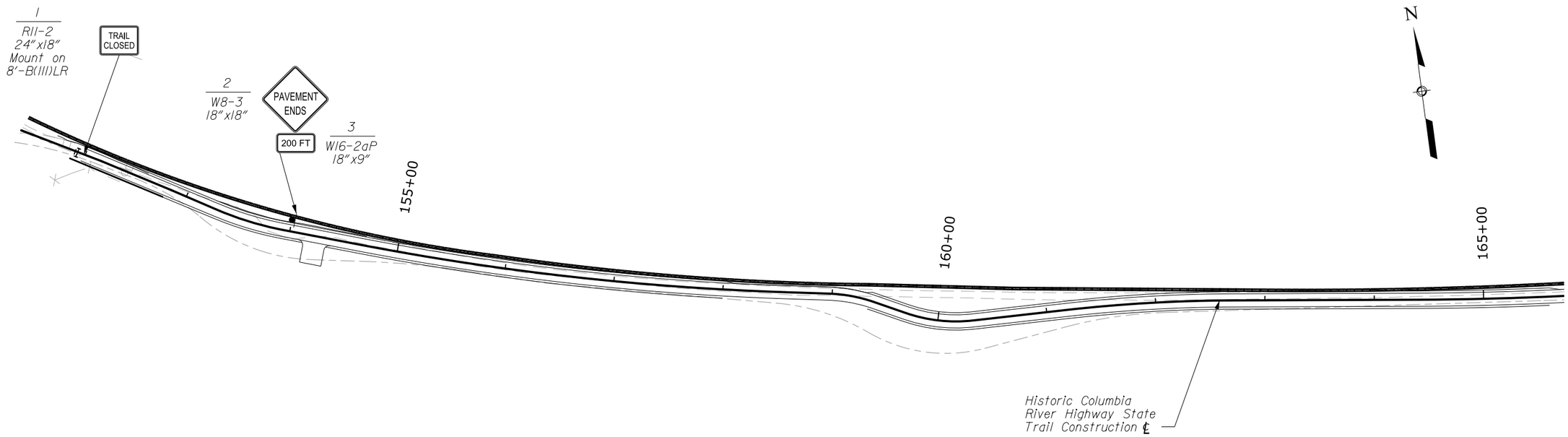

NOTE:

1. Fabricate MUTCD signs along trail with brown backs.

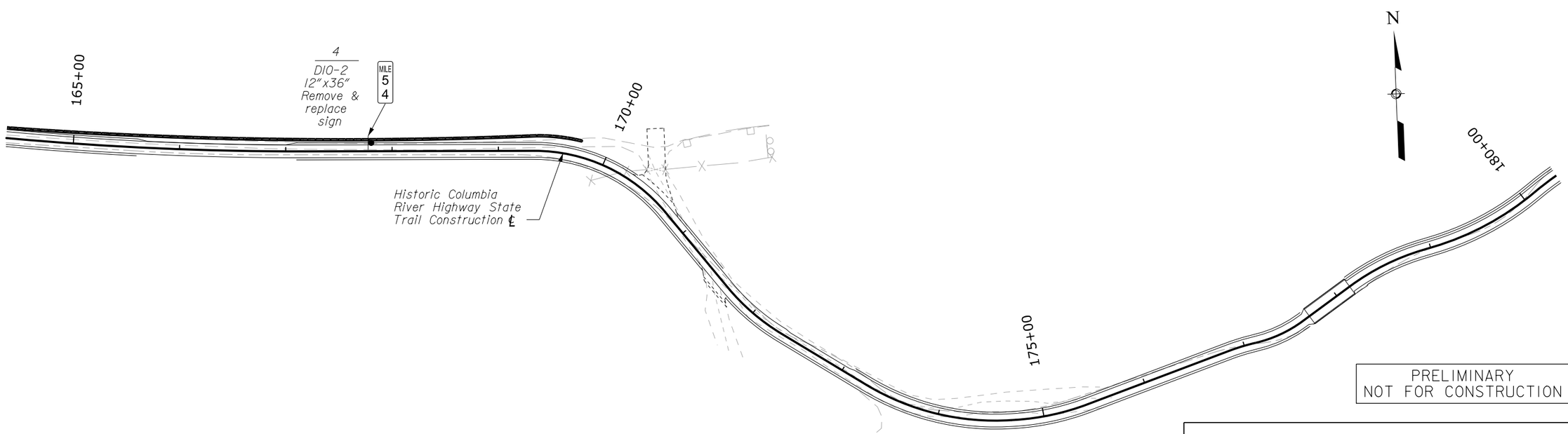

PRELIMINARY
NOT FOR CONSTRUCTION

LEGEND:

1 / R11-2 — Sign Number / MUTCD Number

Scale in feet
50 25 0 50 100 150

PERMANENT TRAFFIC CONTROL PLAN

Designed by: M. Wainscott 02/2015
Checked by: S. Daleo 02/2015
11-Feb-2015 03:51 PM
...\of16314hb.dgn [Int_ft2D]

PRELIMINARY
NOT FOR CONSTRUCTION

STATE	PROJECT	SHEET NUMBER
OR	PFH 163(19)	K.3

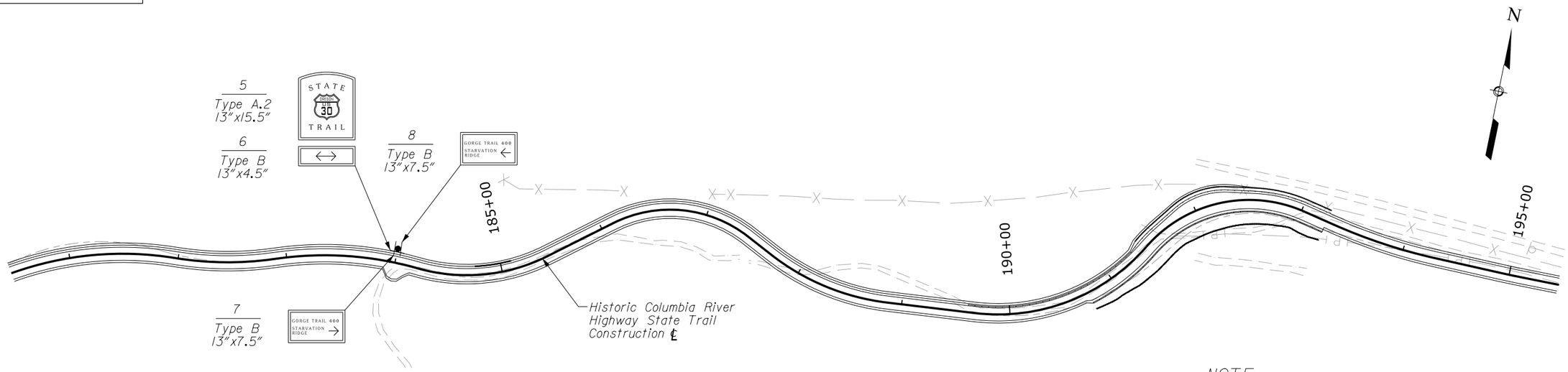

NOTE:

1. Fabricate Signs 7 thru 12 per the Historic Columbia River Highway State Trail Wayfinding Signage Plan, 2013.
2. Sub. sign layouts for Signs 7 thru 10 to Bob Hadlow, ODOT for review prior to fabrication.

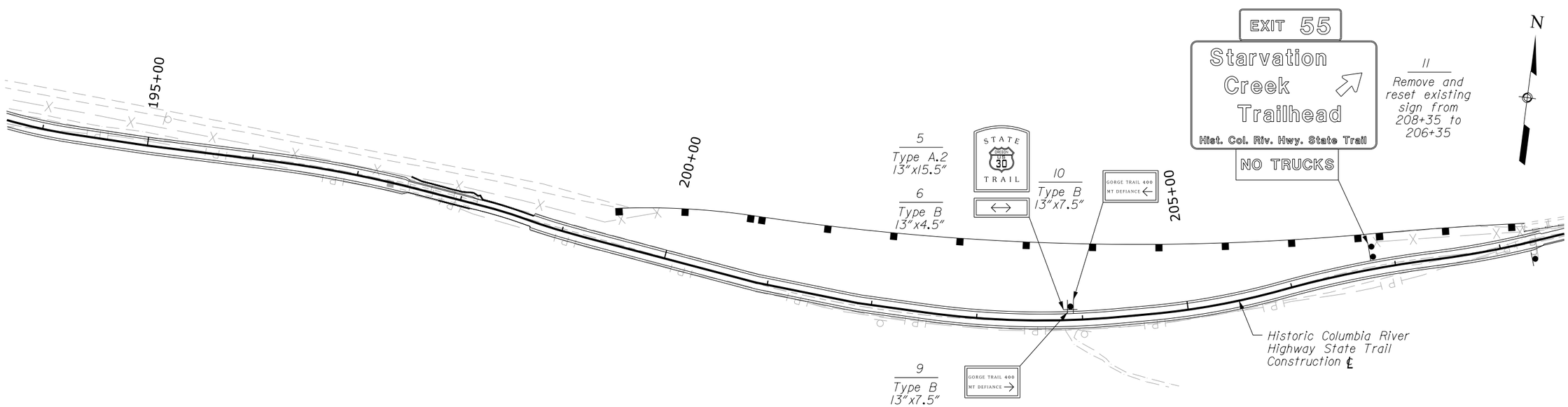

LEGEND:

1 / Type A.2	Sign Number Historic columbia river state trail wayfinding plan

Scale in feet
50 25 0 50 100 150

PERMANENT TRAFFIC CONTROL PLAN

02/2015 | S. Daleo | Designed by:
02/2015 | M. Wainscott | Checked by:
11-Feb-2015 03:51 PM
...\of16314hc.dgn [Int_ft2D]

PRELIMINARY
NOT FOR CONSTRUCTION

STATE	PROJECT	SHEET NUMBER
OR	PFH 163(19)	K.4

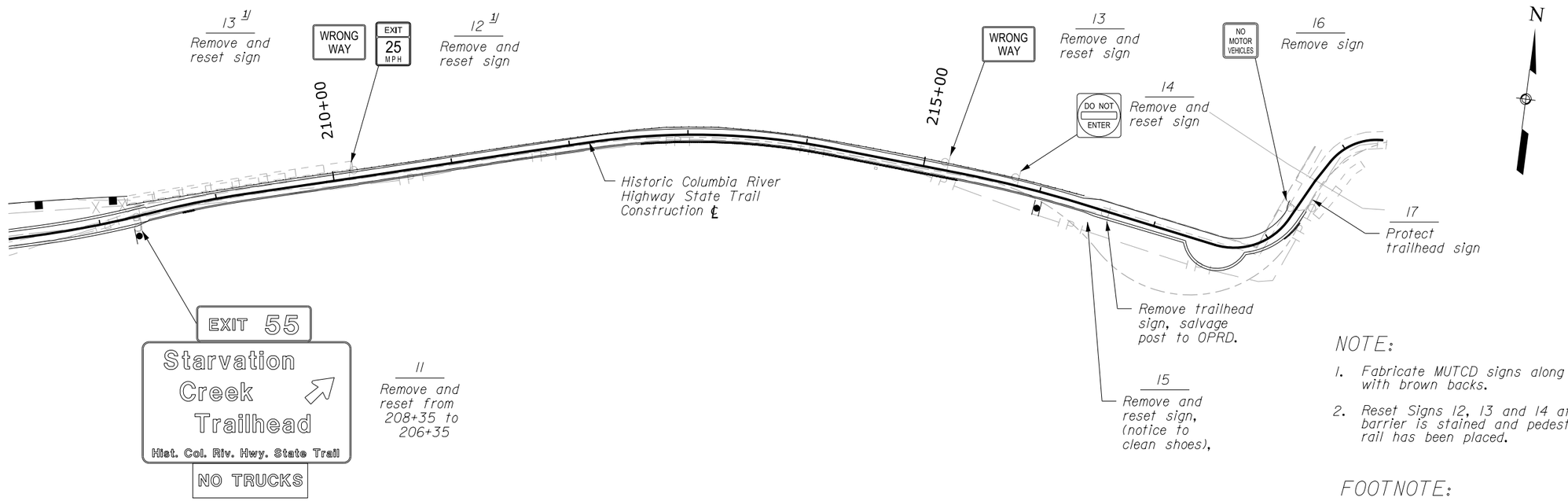

NOTE:

1. Fabricate MUTCD signs along trail with brown backs.
2. Reset Signs 12, 13 and 14 after barrier is stained and pedestrian rail has been placed.

FOOTNOTE:

1/ Existing Sign mounted back to back

LEGEND:

1 / Type A.2	Sign Number Historic Columbia River State Trail Wayfinding Plan

Scale in feet
50 25 0 50 100 150

PERMANENT TRAFFIC CONTROL PLAN

02/2015 S. Daleo Checked by: 02/2015 M. Wainscott Designed by: 11-Feb-2015 03:51 PM ...\of16314hd.dgn [Int_ft2D]

STATE	PROJECT	SHEET NUMBER
OR	PFH 163(19)	K.5

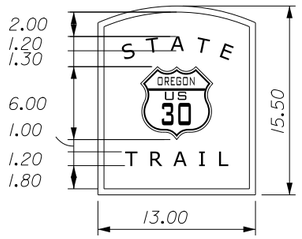

SIGN 5

0.5″ Border,
Panel - NSA tan all surfaces
Sign Face - NSA green painted aluminum
Post - square wood post
Fonts - Copperplate 31AB

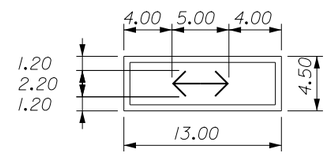

SIGN 6

0.5″ Border,
Panel - NSA tan all surfaces
Sign Face - NSA green painted aluminum
Post - square wood post
Fonts - Copperplate 29BC

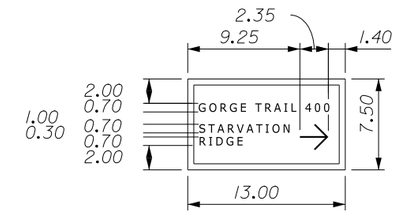

SIGN 7

0.5″ Border,
Panel - NSA tan all surfaces
Sign Face - NSA green painted aluminum
Post - square wood post
Fonts - Copperplate 29BC

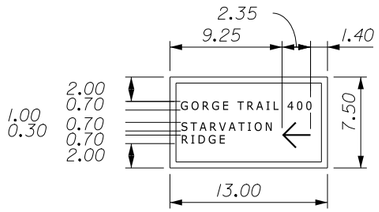

SIGN 8

0.5″ Border,
Panel - NSA tan all surfaces
Sign Face - NSA green painted aluminum
Post - square wood post
Fonts - Copperplate 29BC

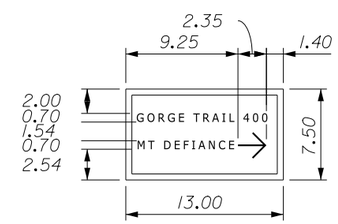

SIGN 9

0.5″ Border,
Panel - NSA tan all surfaces
Sign Face - NSA green painted aluminum
Post - square wood post
Fonts - Copperplate 29BC

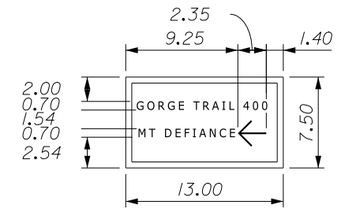

SIGN 10

0.5″ Border,
Panel - NSA tan all surfaces
Sign Face - NSA green painted aluminum
Post - square wood post
Fonts - Copperplate 29BC

PRELIMINARY
NOT FOR CONSTRUCTION

PERMANENT TRAFFIC CONTROL SIGN DETAILS

02/2015 S. Daleo Checked by: 02/2015 M. Wainscott Designed by: 11-Feb-2015 03:51 PM ...\of16314he.dgn [Int_ft2D]

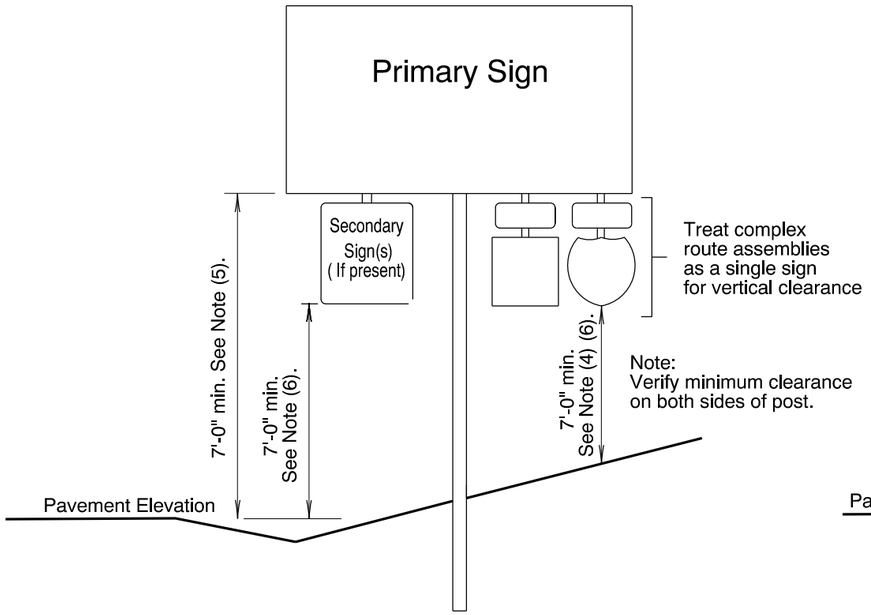

MOUNTING HEIGHT
Guide Sign

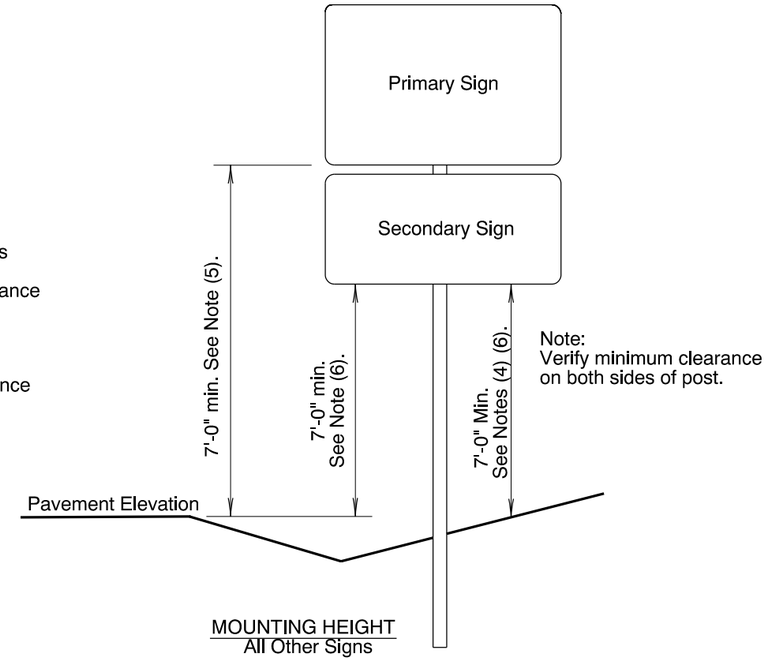

MOUNTING HEIGHT
All Other Signs

General Installation Notes:

a. Signing details shown on this sheet are intended to convey "typical" conditions only. Individual locations may require installation different from those shown.
For guidance regarding unique installations or exceptions call the Project Sign Designer or Region Traffic Section.

b. Locate breakaway supports away from ditches to avoid problems with erosion, corrosion, debris, maintenance and breakaway performance. See Dwg. No. TM635 for more information.

c. For wood post support details see Dwg. No. TM670.

d. For perforated steelsquare tube support details see Dwg. No. TM681.

e. For triangular base breakaway support details see Dwg. No. TM602.

f. For multi-post breakaway support details see Dwg. No. TM600.

g. Mounting heights should not be more than 3 inches more than the minimum heights shown, where practical.

h. 2" vertical spacing between all signs.

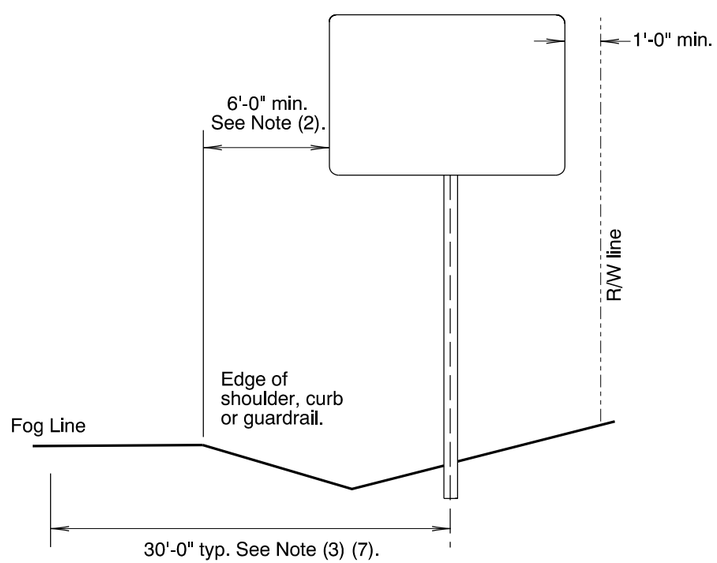

LATERAL OFFSET
Guide Signs

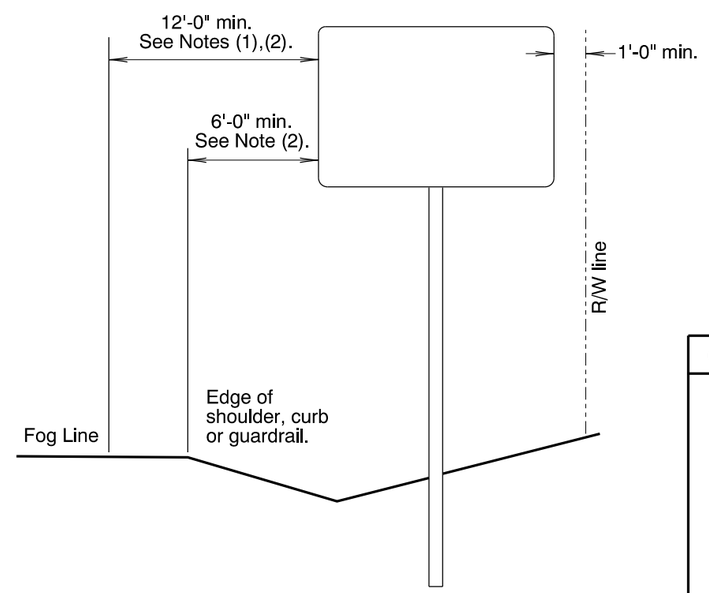

LATERAL OFFSET
All Other Signs

Notes:

1). 6' minimum if behind barrier.

2). 2' minimum if restricted R/W.

3). 20' for ramp terminals.

4). 8' minimum if bicycle path underneath.

5). 8' minimum if secondary signs attached.

6). 5' minimum if outside clearzone, in rural areas and no pedestrians underneath.

7). For multi-post installations measure distance from post closest to roadway.

CALC. BOOK NO. N/A

BASELINE REPORT DATE 01/06/2012

NOTE: All material and workmanship shall be in accordance with the current Oregon Standard Specifications

The selection and use of this Standard Drawing, while designed in accordance with generally accepted engineering principles and practices, is the sole responsibility of the user and should not be used without consulting a Registered Professional Engineer.

OREGON STANDARD DRAWINGS

SIGN INSTALLATION DETAILS

2015

DATE	REVISION DESCRIPTION

TM200.dgn 1-6-2012

TM200

STATE	PROJECT	SHEET NUMBER
OR	PFH 163(19)	K.7

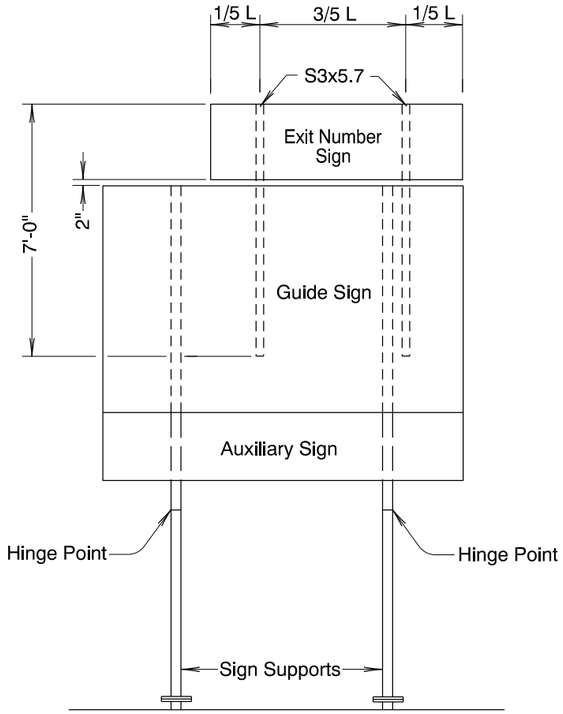

Mount auxiliary sign to sign supports with post clips.
Bolt auxiliary sign to guide sign as shown on Dwg. TM675.

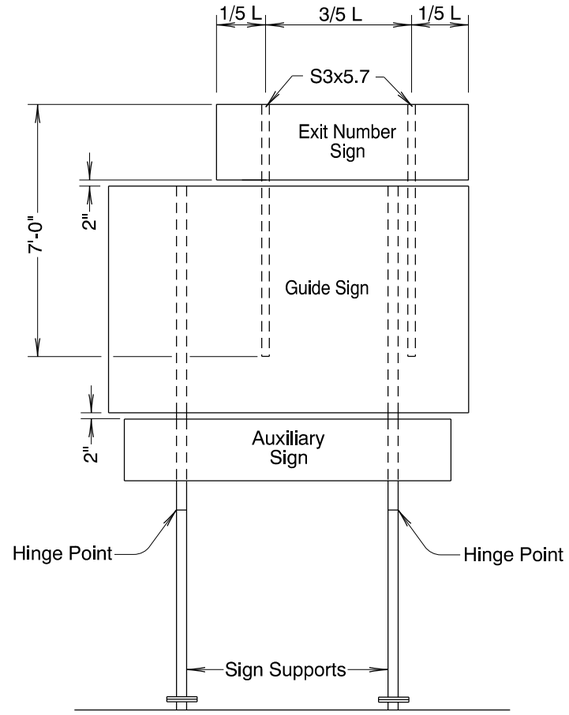

Typical auxiliary sign mounting with exit number sign mounts. Auxiliary signs that extend outside sign supports shall also be fastened to sign supports with post clips. Length of sign mounts used to support auxilliary sign will vary depending on height of auxiliary sign.

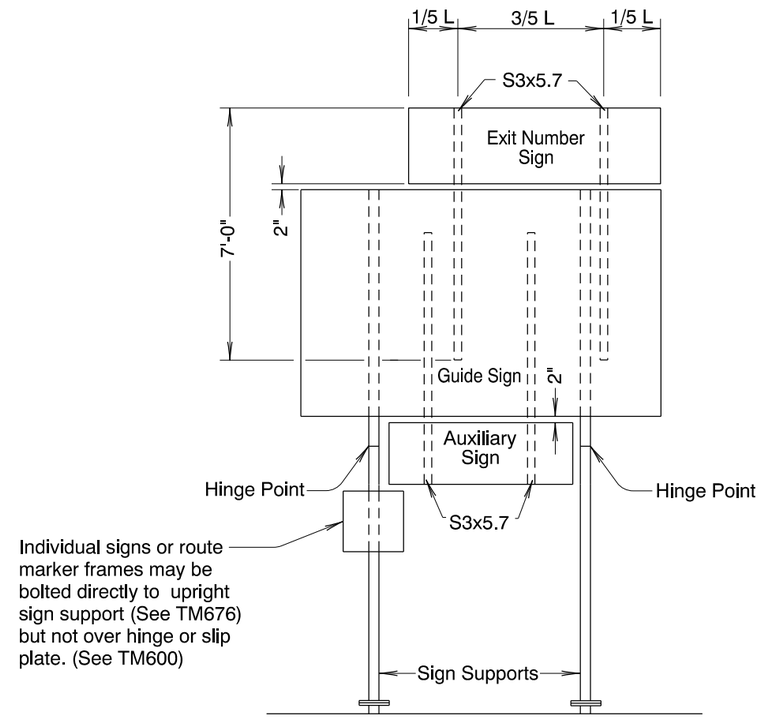

Typical auxiliary sign mounting with exit number sign mounts. Auxiliary sign does not extend to sign supports. Length of sign mounts used to support auxiliary sign will vary depending on height of auxiliary sign.

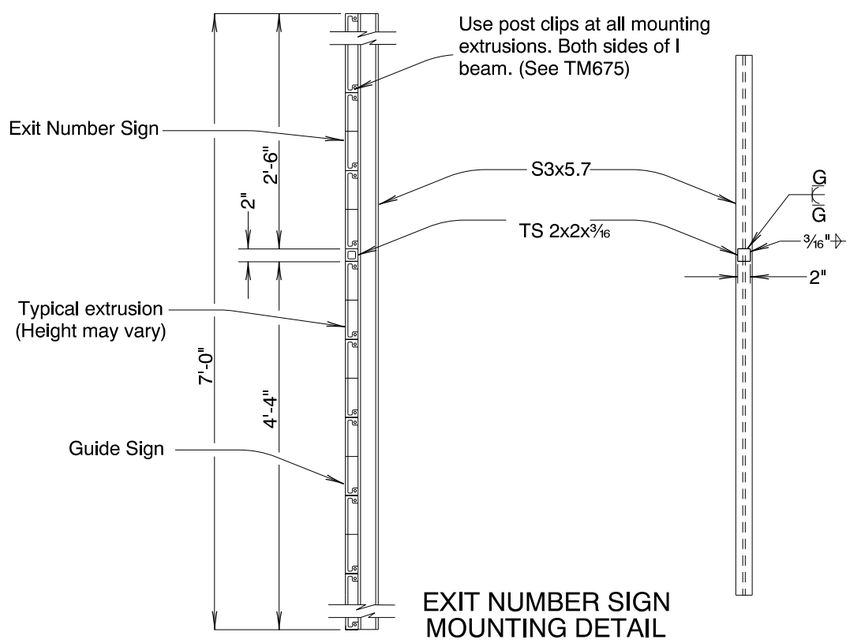

EXIT NUMBER SIGN MOUNTING DETAIL

Notes:

1) All bolts, nuts and washers shall be stainless steel unless noted otherwise.
2) Exit Number sign shall be aligned with right side of guide sign (Exception: Exit Number sign shall be aligned with left side of guide sign for left exit interchanges.)
3) Refer to TM600 for other details.

CALC. BOOK NO. _____

BASELINE REPORT DATE 7-06-12

NOTE: All material and workmanship shall be in accordance with the current Oregon Standard Specifications

The selection and use of this Standard Drawing, while designed in accordance with generally accepted engineering principles and practices, is the sole responsibility of the user and should not be used without consulting a Registered Professional Engineer.

OREGON STANDARD DRAWINGS

MULTI-POST INSTALLATIONS WITH AUXILIARY SIGNS

2015

DATE	REVISION DESCRIPTION

TM220.dgn 7-6-2012

TM220

F:\mgk\Traffic\Standard Drawings\2014_July_Update\plotfile_TM200s_500s.dgn :: Default 7/8/2014 10:43:09 AM hwyr20m

Effective Date: February 1, 2015 - May 31, 2015

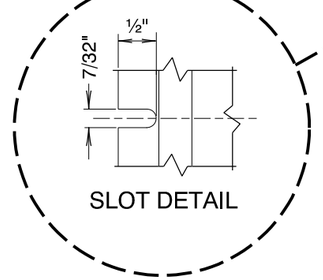

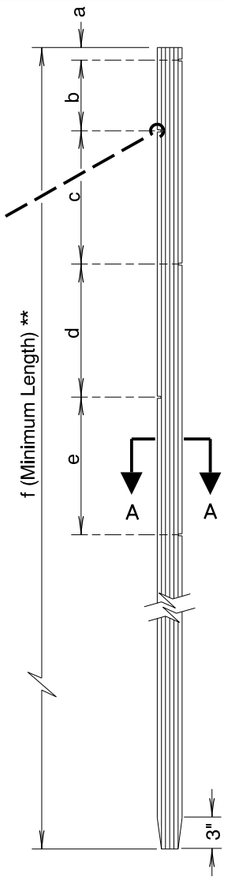

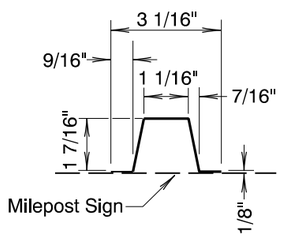

SECTION A-A
Dimensions Nominal

POST DETAILS

POST DIMENSION TABLE						
SIGN *	a	b	c	d	e	f **
A	1"	7"	8½"	——	——	8'-6"
B	1"	7"	8½"	9"	——	9'-3"
C	1"	7"	8½"	9"	9"	10'-0"
D	1"	7"	12½"	——	——	9'-0"
E	1"	7"	12½"	13"	——	10'-6"
F	1"	7"	12½"	13"	13"	12'-0"

* See TM221

** Length may vary according to ground slope conditions.

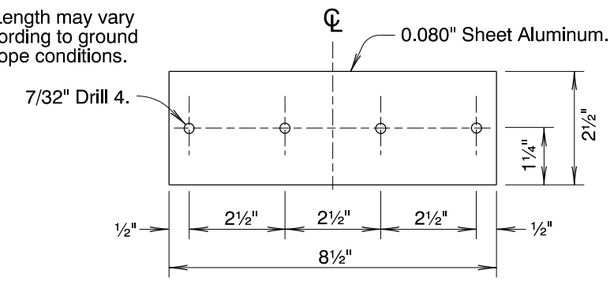

Bend around centerline.

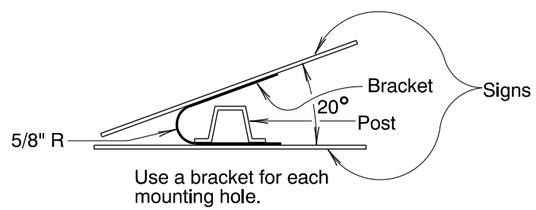

Use a bracket for each mounting hole.

BRACKET ASSEMBLY
(Use only on 2 lane roads)

GENERAL NOTES:

1. POST AND BRACKET ASSEMBLIES
   (a) The nominal weight of the post shall be 2 pounds per lineal foot.
   (b) Bracket assemblies shall conform to subsection 2910.10 of the current Oregon Standard Specifications for Construction.
2. INSTALLATION
   (a) If roadway conditions prohibit locating the milepost sign at the milepoint, it may be moved up to 50 feet in either direction. If it cannot be located within this variation, it should be omitted.
   (b) Signs shall be mounted to posts with 3⁄16" diameter aluminum blind rivets that conform to subsection 2910.40 of the current Oregon Standard Specifications for Construction.
   (c) If the milepost sign is located within 25 feet of a delineator, the delineator should be moved or deleted.
   (d) Installation of the post and sign panel shall conform to subsection 840.41 of the current "Oregon Standard Specifications".

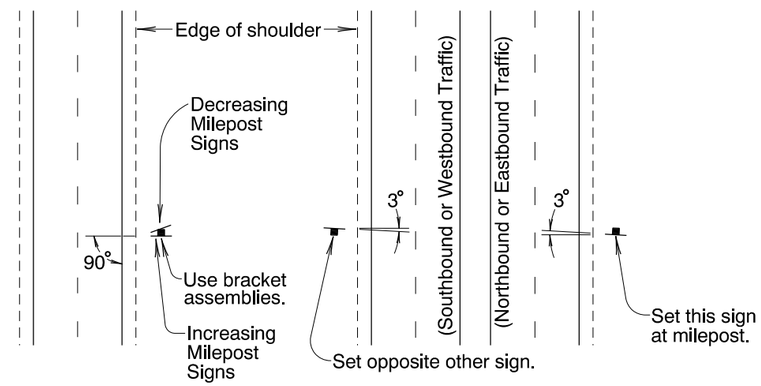

CONVENTIONAL ROADS EXPRESSWAYS & FREEWAYS

INSTALLATION

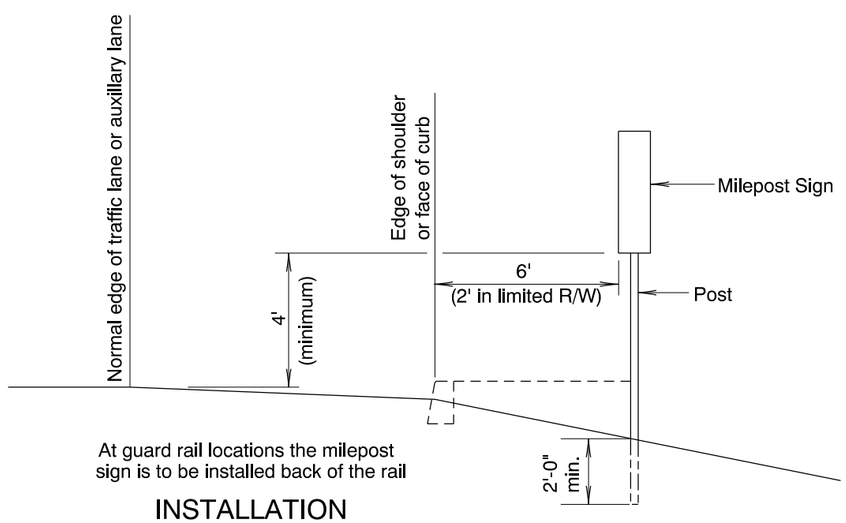

At guard rail locations the milepost sign is to be installed back of the rail

INSTALLATION

CALC. BOOK NO. N/A

BASELINE REPORT DATE 12-10-09

NOTE: All material and workmanship shall be in accordance with the current Oregon Standard Specifications

The selection and use of this Standard Drawing, while designed in accordance with generally accepted engineering principles and practices, is the sole responsibility of the user and should not be used without consulting a Registered Professional Engineer.

OREGON STANDARD DRAWINGS

INSTALLATION DETAILS
MILEPOST MARKER POSTS
2015

DATE	REVISION DESCRIPTION

TM222.dgn 1-6-2012

TM222

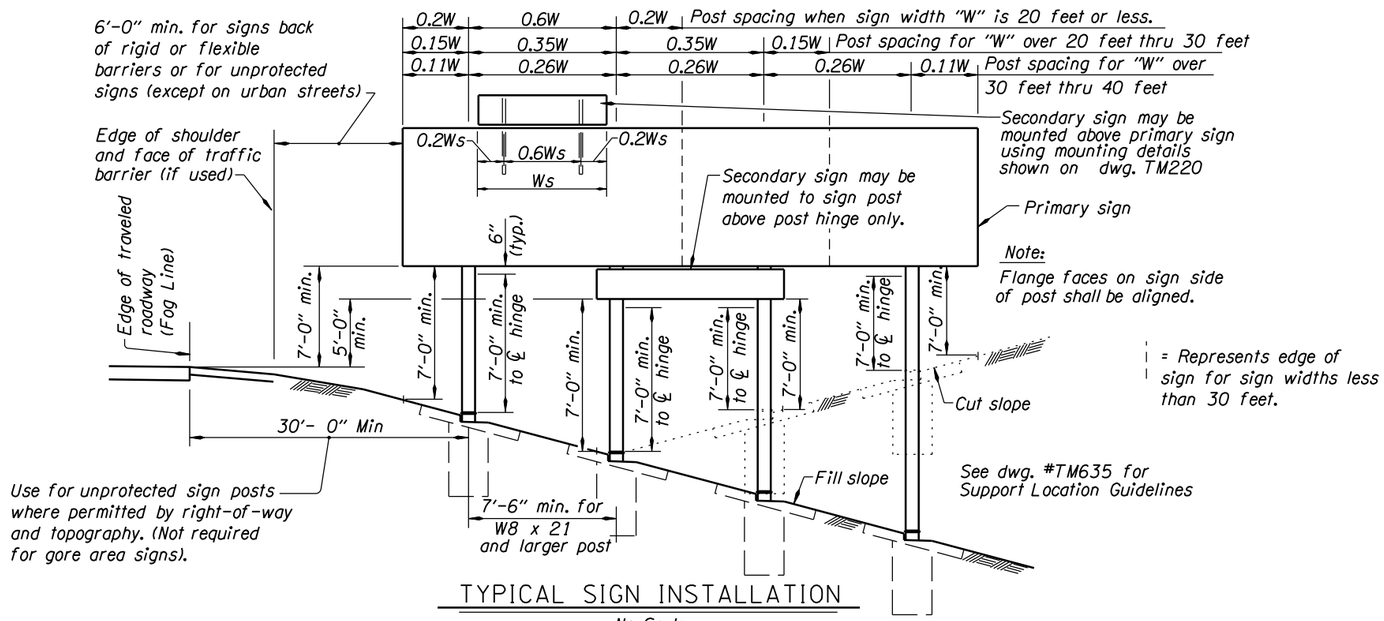

TYPICAL SIGN INSTALLATION

No Scale

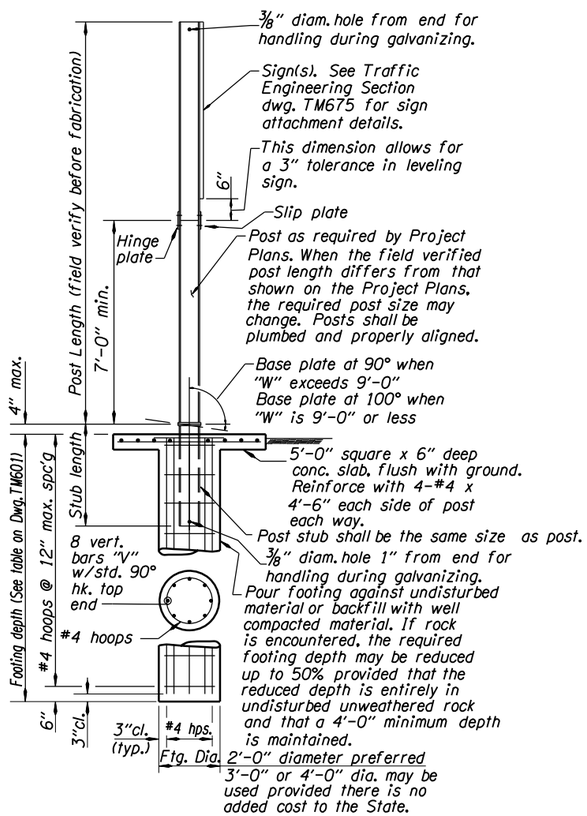

BREAKAWAY SIGN POST

No Scale

GENERAL NOTES:

1. Sign supports are designed in accordance with the AASHTO Standard Specifications for Structural Supports for Highway Signs, Luminaires, and Traffic Signals 1994. Use a wind velocity with a 25-year mean reccurrence interval.
2. All concrete shall be Commercial Grade Concrete (f'c = 3000 psi).
3. All reinforcing steel shall conform to AASHTO Specification M31 (ASTM A615), Grade 60 or A706.
4. The following splice lengths shall be used unless otherwise shown:

Bar Size		3	4	5	6	7	8	9	10	11
Splice Length	Uncoated	1'-0"	1'-4"	1'-8"	2'-0"	2'-8"	3'-6"	4'-4"	5'-7"	6'-9"

5. All structural steel shall conform to ASTM Specification A572, Grade 50 unless shown otherwise.
6. Shims shall be fabricated from brass shim stock conforming to ASTM B36.
7. All bolts shall be high strength bolts conforming to ASTM Specification A325 (AASHTO M164). Nuts for high strength bolts shall be well lubricated heavy hexagon nuts conforming to ASTM Specification A563, (AASHTO M291), Grade DH. Compressible direct tension indicator washers shall conform to ASTM Specification F959. Hardened steel washers shall conform to ASTM Specification F436 (AASHTO M293).
8. Steel sheet for keepers shall conform to ASTM Specification A653.
9. Hinge and base plate holes shall be sub-drilled and reamed to size. Hinge and base plate slots shall be saw cut or machine guided flame cut.
10. Direct tension indicator washers shall be mechanically galvanized to ASTM B695.
11. Keeper plate shall be galvanized in accordance with ASTM A653, Coating G165.
12. All other steel including fasteners shall be hot-dip galvanized after fabrication. Remove galvanizing runs and beads on all slip surfaces. Nuts for high strength bolts may be retapped after galvanizing.
13. The use of a post larger than required by design is not permitted.
14. Tightening of base plate bolts shall be done with a state inspector present.
15. See TM601 for additional details.

BASE PLATE BOLTING PROCEDURE:

1. Assemble post to stub as shown in Base Assembly Detail.
2. Shim as required to plumb post. (+/- 1/16"/vert. 12") (2 shims maximum per bolt)
3. Tighten bolts in a systematic order to the "T1" torque prescribed in the Base Plate Data Table.
4. Loosen and retighten bolts to the "T2" torque prescribed in the Base Plate Data Table. Use the same order as the intitial tightening and DO NOT OVER TIGHTEN!
5. Burr threads at junction with nut using a center punch.

HINGE AND SLIP PLATE BOLTING PROCEDURE:

1. Shop assemble post sections as shown. (D.T.I. bumps toward bolt head)
2. Tighten each nut in a systematic order until the gap between the bolt head and direct tension indicator washer is in the 0.005" to 0.010" range.
3. Further tighten each nut in the same order until a nil gap between the bolt head and indicator washer is attained.

CALC. BOOK NO.	BASELINE REPORT DATE	ACCOMPANIED BY DWGS.	SHEET
1493		TM220, TM601, TM635, TM675	1 OF 2

NOTE: All material and workmanship shall be in accordance with the current Oregon Standard Specifications

The selection and use of this Standard Drawing, while designed in accordance with generally accepted engineering principles and practices, is the sole responsibility of the user and should not be used without consulting a Registered Professional Engineer.

OREGON STANDARD DRAWINGS

MULTI-POST BREAKAWAY SIGN SUPPORTS

NOTES

2015

DATE	REVISION DESCRIPTION

Post & Stub	Hinge Data							Base Plate Data									Footing Data		Min. Footing Depth		
Depth & Mass/ft	Hinge PL t1	Slip PL t2	A	B	C	Hinge Bolts Dia.	Hinge Bolts Length	Base PL t3	D	E	F	G	Bolt dia.	Bolt "T1" Torque	Bolt "T2" Torque	Bolt Length	Stub Length	V bars	2'-0" dia.	3'-0" dia.	4'-0" dia.
W6 x 9	3/8"	3/8"	4"	7/8"	2 1/4"	3/4"	2"	1"	4 1/4"	3/4"	8 1/2"	10"	5/8"	150 ft.-lb.	50 ft.-lb.	4 1/4"	2'-0"	#4	4'-9"	—	—
W6 x 12	3/8"	3/8"	4"	7/8"	2 1/4"	3/4"	2"	1"	4 1/2"	3/4"	8 1/2"	10"	5/8"	150 ft.-lb.	50 ft.-lb.	4 1/4"	2'-4"	#5	5'-6"	—	—
W6 x 15	3/8"	1/2"	6"	1 1/4"	3 1/2"	7/8"	2 1/2"	1"	6 1/4"	7/8"	8 1/2"	10 1/4"	3/4"	280 ft.-lb.	70 ft.-lb.	4 1/2"	2'-8"	#6	6'-6"	—	—
W8 x 18	1/2"	1/2"	5 1/4"	1 1/4"	2 3/4"	7/8"	2 1/2"	1 3/8"	5 1/2"	7/8"	11 3/4"	1'-1 1/2"	3/4"	280 ft.-lb.	70 ft.-lb.	5"	3'-0"	#7	8'-0"	6'-6"	—
W8 x 21	1/2"	5/8"	5 1/4"	1 1/4"	2 3/4"	1"	2 3/4"	1 3/8"	6"	1"	11 3/4"	1'-1 3/4"	7/8"	450 ft.-lb.	80 ft.-lb.	5 1/4"	3'-4"	#8	8'-9"	7'-0"	—
W10 x 22	1/2"	5/8"	5 3/4"	1 1/2"	2 3/4"	1"	2 3/4"	1 3/8"	6"	1"	1'-1 1/2"	1'-3 1/2"	7/8"	450 ft.-lb.	80 ft.-lb.	5 1/4"	3'-8"	#8	10'-3"	7'-9"	6'-6"
W10 x 26	1/2"	5/8"	5 3/4"	1 1/2"	2 3/4"	1 1/8"	3"	1 3/8"	7"	1 1/8"	1'-1 1/2"	1'-3 3/4"	1"	680 ft.-lb.	90 ft.-lb.	5 1/2"	4'-0"	#9	11'-0"	8'-9"	7'-3"
W12 x 26	1/2"	5/8"	6 1/2"	1 1/2"	3 1/2"	1 1/8"	3"	1 1/2"	7"	1 1/8"	1'-3 1/2"	1'-5 3/4	1"	680 ft.-lb.	90 ft.-lb.	5 3/4"	4'-4"	#10	12'-3"	9'-6"	8'-0"
W12 x 30	1/2"	5/8"	6 1/2"	1 1/2"	3 1/2"	1 1/4"	3"	1 1/2"	8"	1 1/4"	1'-3 1/2"	1'-6"	1 1/8"	840 ft.-lb.	100 ft.-lb.	5 3/4"	4'-8"	#11	13'-3"	10'-6"	8'-9"
W14 x 30	1/2"	5/8"	6 3/4"	1 1/2"	3 3/4"	1 1/4"	3"	1 1/2"	8"	1 1/4"	1'-5 1/2"	1'-8"	1 1/8"	840 ft.-lb.	100 ft.-lb.	5 3/4"	5'-0"	#11	13'-9"	10'-9"	9'-0"

Notes:
1. *See TM635 for placement of signs.*
2. *See TM600 for Additional details and bolting procedures.*

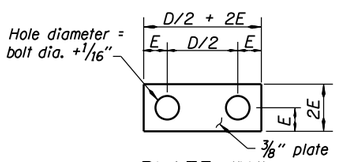

PLATE "H"

No Scale

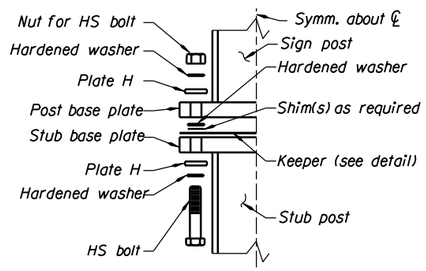

BASE ASSEMBLY DETAIL

No Scale

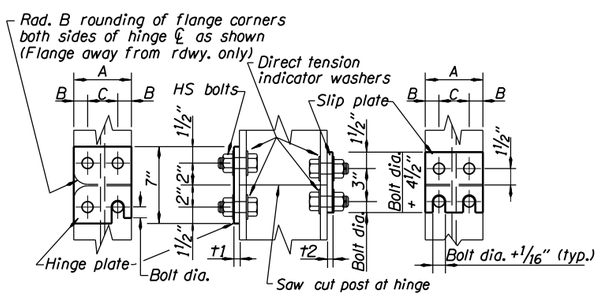

POST HINGE DETAILS

No Scale

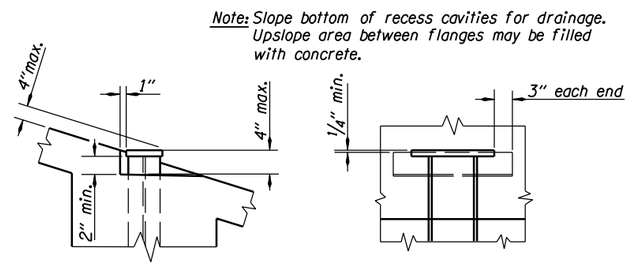

BASE PLATE RECESS FOR SIDE SLOPE INSTALLATIONS

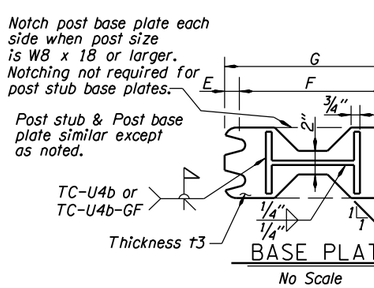

BASE PLATE

No Scale

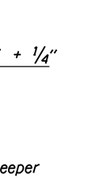

KEEPER

No Scale

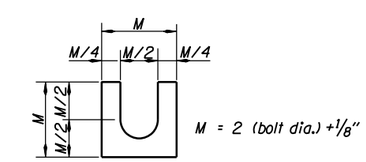

BRASS SHIM DETAIL

Provide 2 @ 0.012" thick and 2 @ 0.032" thick at each bolt.

CALC. BOOK NO.	BASELINE REPORT DATE	ACCOMPANIED BY DWGS.	SHEET
1493		TM205, TM220, TM600, TM635, TM675	2 OF 2

NOTE: All material and workmanship shall be in accordance with the current Oregon Standard Specifications

The selection and use of this Standard Drawing, while designed in accordance with generally accepted engineering principles and practices, is the sole responsibility of the user and should not be used without consulting a Registered Professional Engineer.

OREGON STANDARD DRAWINGS

MULTI-POST BREAKAWAY SIGN SUPPORTS DETAILS

2015

DATE	REVISION DESCRIPTION

tm601.dgn 11-JUL-2014

TM601

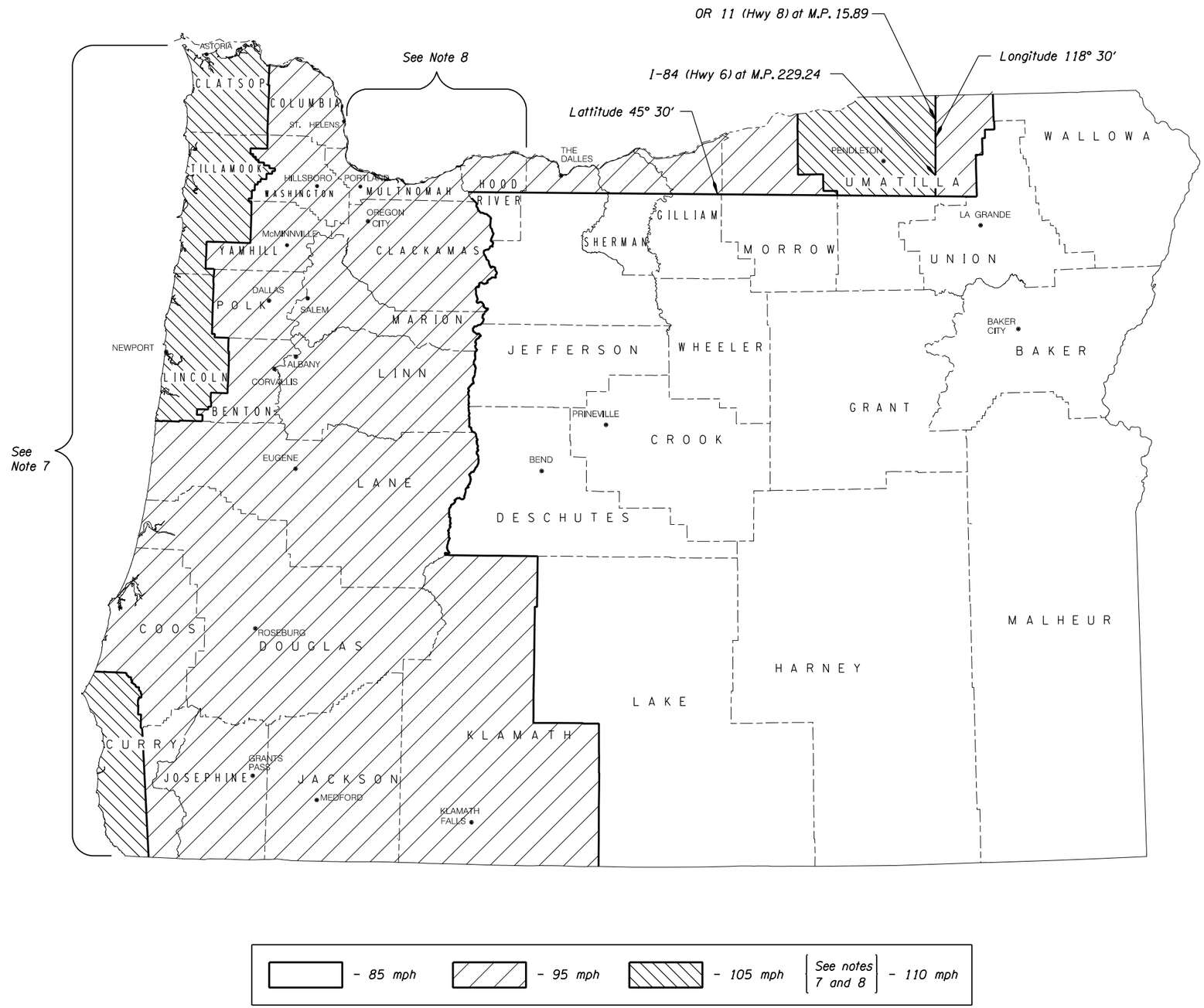

NOTES:

1. The wind velocity map as shown is adapted from AASHTO 2001 4th Edition - "Standard Specifications for Structural Supports for Highway Signs, Luminaires and Traffic Signals", Appendix C, Figure C-3 and Section 3, Figure 3-2. It uses the wind speed map shown in Figure 1609 of the 2007 Oregon Structural Code to account for locations in the State with special wind regions.
2. The wind velocities shown above are 3-Second Gust wind velocities.
3. The Exposure Catagory is C.
4. The mean recurrence interval is 50-Years.
5. Mountanious terrain, gorges, and ocean promontories are classified as special wind regions and shall be examined for unusual wind conditions.
6. The Interval Height (Kz) is 30 ft.
7. All areas with full exposure to ocean winds shall be designated 110 mph areas.
8. Areas in Multnomah and Hood River counties with full exposure to Columbia River Gorge winds shall be designated 110 mph areas.
9. Localities may have adopted wind speed higher that shown on this map. Those higher wind speed shall be used.

CALC. BOOK NO.	BASELINE REPORT DATE	ACCOMPANIED BY DWGS.	SHEET
	06-JAN-2012		1 OF 1

NOTE: All material and workmanship shall be in accordance with the current Oregon Standard Specifications

The selection and use of this Standard Drawing, while designed in accordance with generally accepted engineering principles and practices, is the sole responsibility of the user and should not be used without consulting a Registered Professional Engineer.

OREGON STANDARD DRAWINGS

3 SECOND GUST WIND SPEED MAP

2015

DATE	REVISION DESCRIPTION

tm671.dgn 11-JUL-2014

TM671

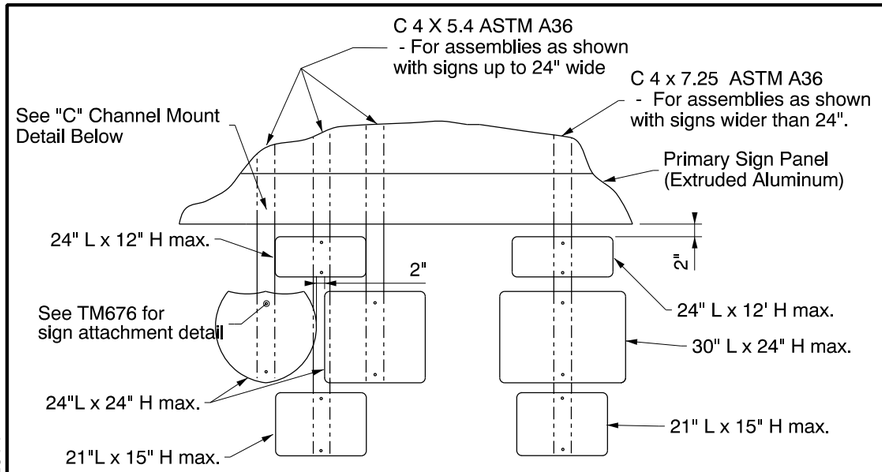

Note: Maintain 2" Horizontal and 2" Vertical Spacing (Typical)

ROUTE MARKER MOUNTS UNDER EXTRUDED PANELS
Scale: None

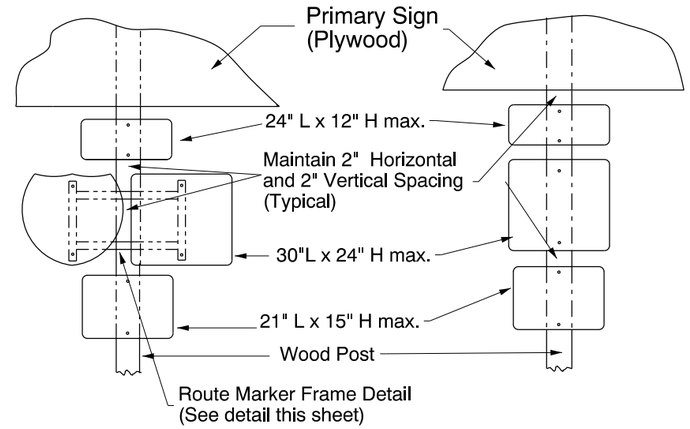

ROUTE MARKERS MOUNTED ON WOOD POSTS
Scale: None

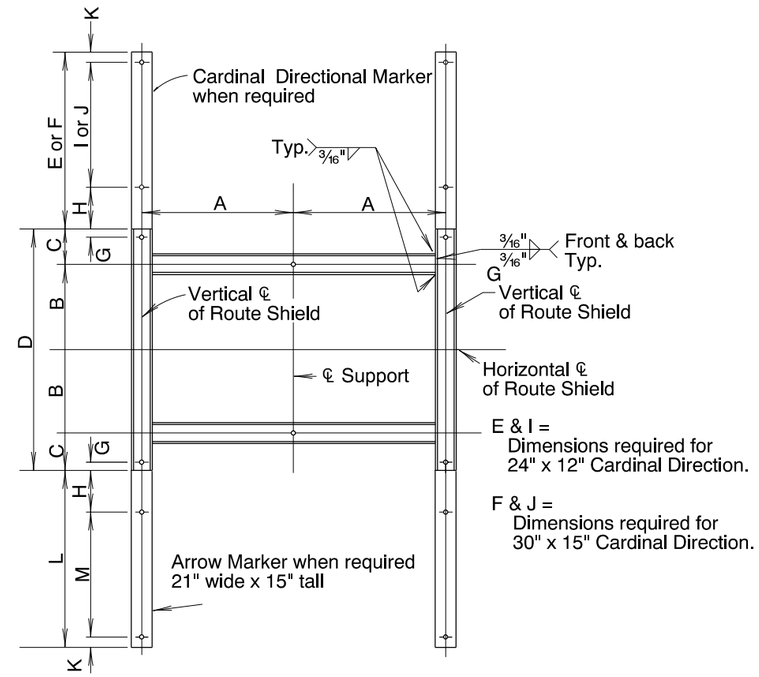

Shield Sizes (in inches)	A	B	C	D	E	F	G	H	I	J	K	L	M
2 - 24" x 24"	13	8	3½	23	14	17	¾	4	9	12	1	17	12
1 - 24" x 24" & 1-30" x 24"	14½	8	3½	23	14	17	¾	4	9	12	1	17	12
2 - 30" x 24"	16	8	3½	23	14	17	¾	4	9	12	1	17	12
2 - 36" x 36"	19	12	5½	35	14	17	1⅜	4	9	12	1	17	12
1 - 36" x 36" & 1-45" x 36"	21¼	12	5½	35	14	17	1⅜	4	9	12	1	17	12
2 - 45" x 36"	23½	12	5½	35	14	17	1⅜	4	9	12	1	17	12

Note: Route Marker frames shall be constructed from 2" x 2" x 3/16" ASTM A53 GR B tubing, galvanized after fabrication. Provide 7/16" holes for mounting signs to sign frame and sign frame to post. Use 3/8" bolts, washers and lock-nuts for mounting signs and sign frame. When mounting signs to wood posts use a nylon washer and a stainless steel washer. All hardware shall be galvanized steel, stainless steel or aluminum alloy.

ROUTE MARKER FRAME DETAIL
Scale: None

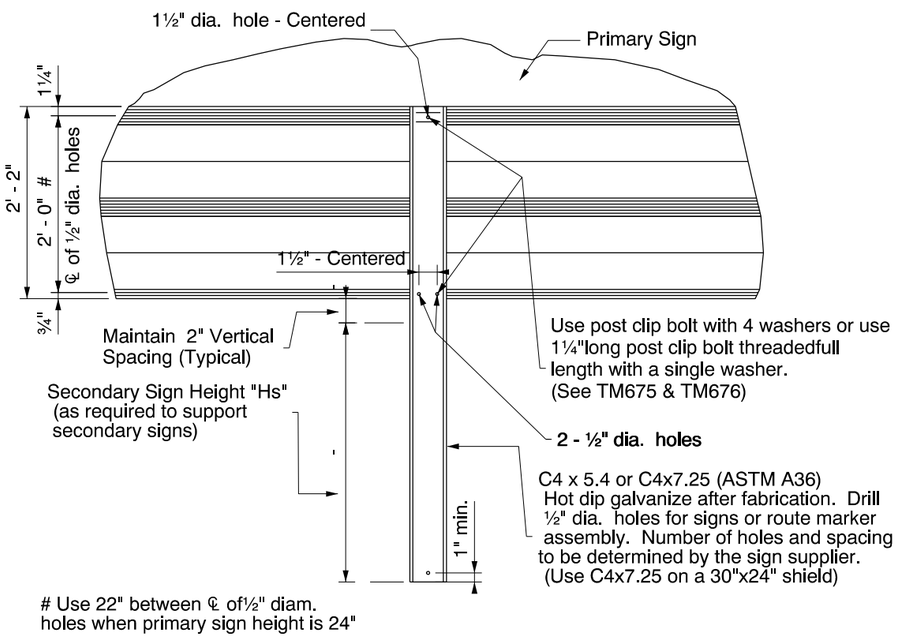

"C" CHANNEL CONNECTION DETAIL
SCALE: None

CALC. BOOK NO.	BASELINE REPORT DATE	ACCOMPANIED BY DWGS.	SHEET 1 OF 1

NOTE: All material and workmanship shall be in accordance with the current Oregon Standard Specifications

The selection and use of this Standard Drawing, while designed in accordance with generally accepted engineering principles and practices, is the sole responsibility of the user and should not be used without consulting a Registered Professional Engineer.

OREGON STANDARD DRAWINGS

SECONDARY SIGN MOUNTING DETAILS

2015

DATE	REVISION DESCRIPTION

tm678.dgn 11-JUL-2014

TM678

STATE	PROJECT	SHEET NUMBER
OR	PFH 163(19)	L.1

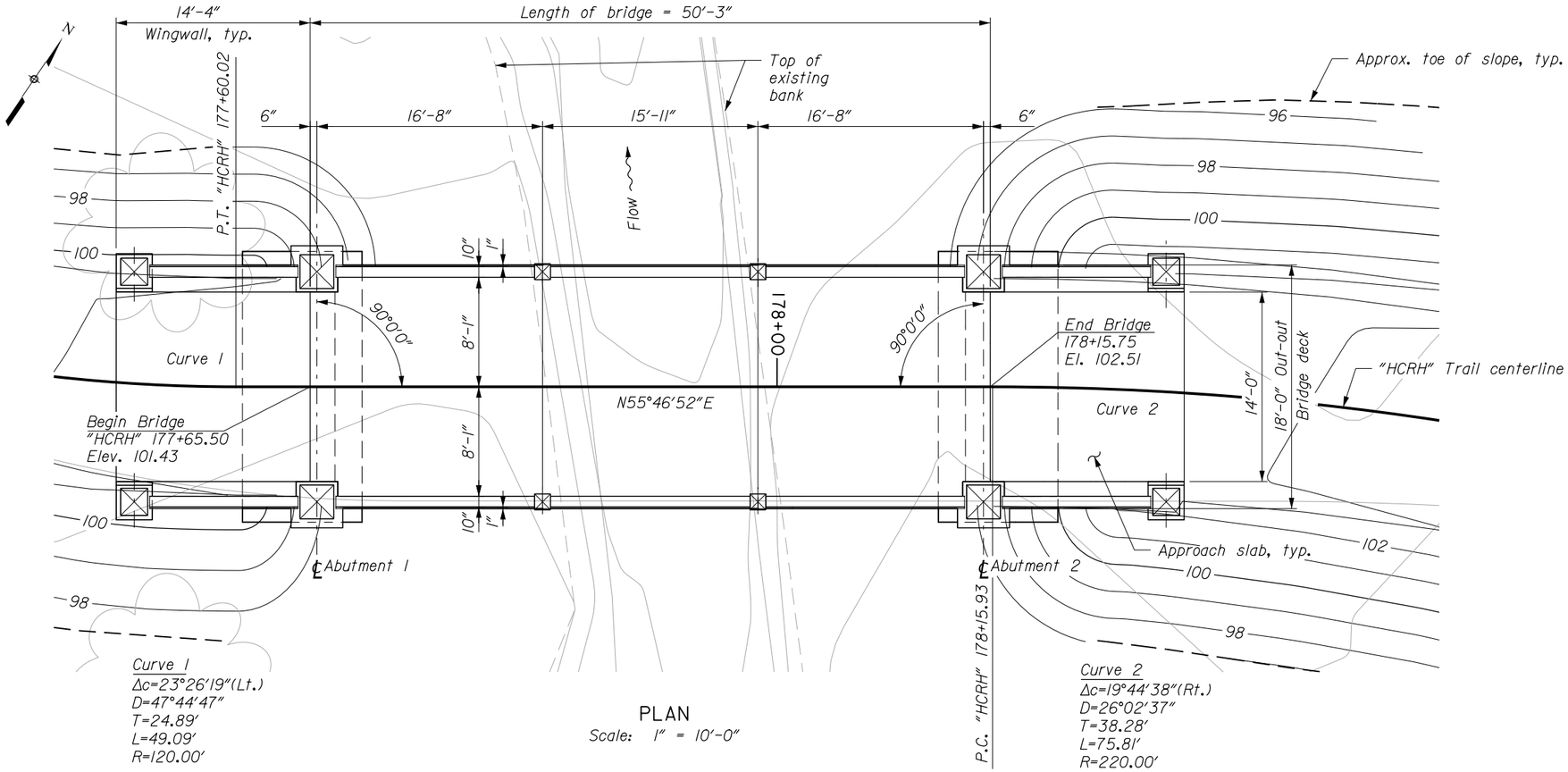

PLAN
Scale: 1" = 10'-0"

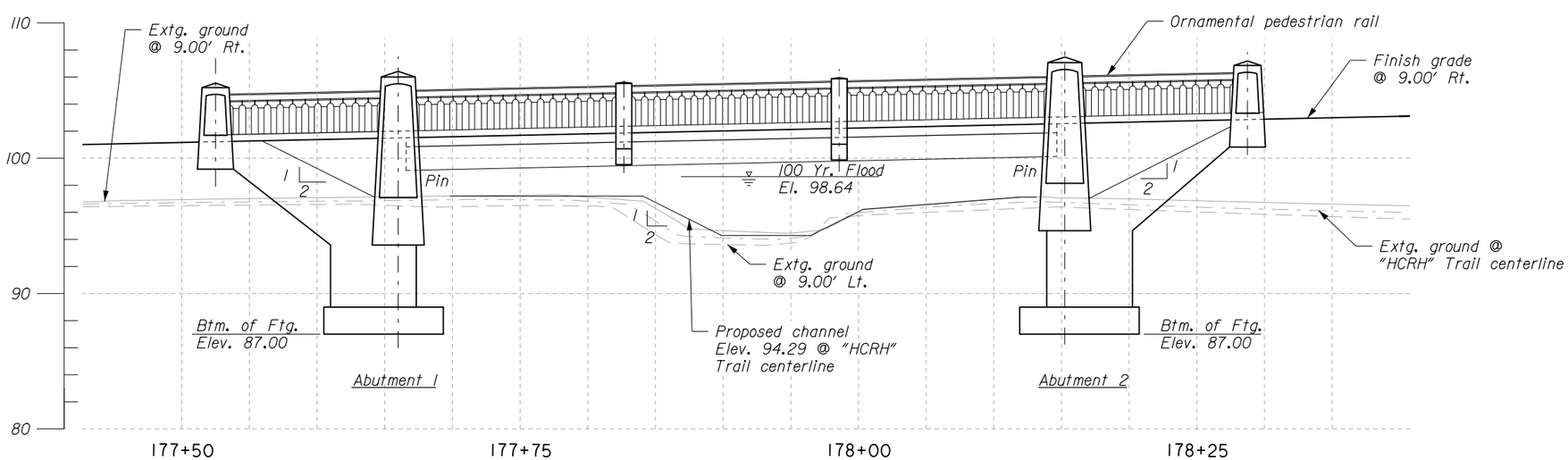

ELEVATION
Scale: 1" = 10'-0"

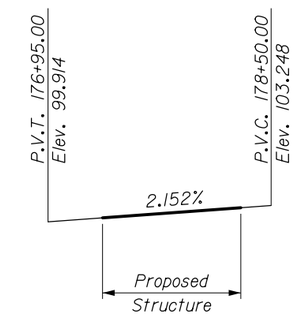

GRADELINE DIAGRAM
No Scale

PRELIMINARY
NOT FOR CONSTRUCTION

For General Notes, see Dwg. L.2

U.S. DEPARTMENT OF TRANSPORTATION
FEDERAL HIGHWAY ADMINISTRATION
WESTERN FEDERAL LANDS HIGHWAY DIVISION

HISTORIC COLUMBIA RIVER HIGHWAY TRAIL

OREGON

WARREN CREEK BRIDGE

PLAN AND ELEVATION

NO.	DATE	BY	REVISIONS	NO.	DATE	BY	REVISIONS	DESIGNED BY	DRAWN BY	CHECKED BY	SCALE	PROJECT TEAM LEADER	BRIDGE DRAWING	DATE	DRAWING NO.
								G CONNER	D MONK	M MONCADA	1"=10'-0"	G CONNER	of	FEBRUARY 2015	L.1

12-Feb-2015 09:48 AM

...#OR100ILoF.dgn [Int_ft2D]

STATE	PROJECT	SHEET NUMBER
OR	PFH 163(19)	L.2

GENERAL NOTES

SPECIFICATIONS:

Design:
AASHTO LRFD Bridge Design Specifications 7th Edition, 2014 and AASHTO LRFD Guide for Specifications for Pedestrian Bridges, December 2009.

Construction:
Federal Highway Administration Standard Specifications for Construction of Roads and Bridges on Federal Highway Projects, FP-14.

DESIGN LOADS:

Dead Loads:
Concrete: 150 pcf
Asphalt Wearing Surface: 0
Lateral Active Earth Pressure: equivalent fluid unit weight of soil, 0.036 kcf.
At Rest Earth Pressure: equivalent fluid unit weight of soil, 0.057 kcf for wingwall design.

Live Load:
Pedestrian Load: 90 psf
Maintenance Truck:

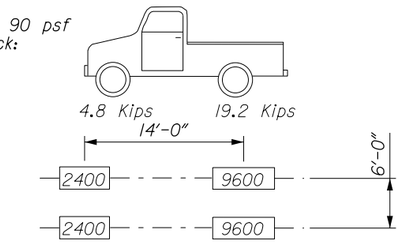

Wind Loads:
In accordance with current AASHTO LRFD Bridge Design Specifications

Seismic Design:
In accordance with the "AASHTO Guide Specifications for LRFD Seismic Bridge Design" (AASHTO LRFD Bridge Design Specifications"). The Horizontal Peak Ground Acceleration Coefficients (PGA) for the 1000 year (No Collapse) return period is 0.162g, based on 2002 USGS Seismic Hazard Maps. The bridge site is defined as a Site Class D with Site Factor (Fpga) of 1.475.

MATERIALS:

Concrete:
All cast-in-place concrete shall be Class A(AE) with integral concrete color and a minimum 28 day compressive strength f'c=4500 psi.
Precast concrete pilasters and balusters shall be Class A(AE) with integral concrete color and a minimum 28 day compressive strength f'c=4500 psi.
Precast concrete slabs shall be Class P with compressive strength requirements as shown on the slab schedule.
Chamfer exposed edges of cast-in-place concrete ¾" unless noted otherwise on the plans.

Reinforcing Steel:
Provide uncoated reinforcing steel according to ASTM Specification A706, or AASHTO M31 (ASTM A615) Grade 60.
(Provide Field bent stirrups according to ASTM Specification A706.) Use the following splice lengths (unless shown otherwise):

Reinforcing Splice Lengths (Class B) Grade 60										
Bar size	#3	#4	#5	#6	#7	#8	#9	#10	#11	#14 & #18
Uncoated	1'-0"	1'-4"	1'-8"	2'-0"	2'-6"	3'-3"	4'-1"	5'-2"	6'-4"	Not permitted

Increase all splice lengths 40% for horizontal or nearly horizontal bars so placed that more than 12" of fresh concrete is cast below the bar.
Splice reinforcing steel at alternate bars, staggered at least one splice length or as far as possible, unless shown otherwise.
Bar splices other than those shown on the plans will not be paid for.
Support the bottom mat reinforcing steel from the forms with precast mortar blocks at 24" maximum centers each way. Support the top mat of reinforcing steel from the bottom mat of reinforcing steel with wire bar supports as shown in Chapter 3 of the CRSI Manual of Standard Practice (SBU, BBU, or CHCU). Place wire bar supports at 24" maximum centers.
Place bars 2" clear of the nearest face of concrete (unless shown otherwise). The top bends of stirrups extending from beam stems into the top slab may be shop or field bent (unless shown otherwise). The top bends of stirrups extending from prestressed precast units may be shop or field bent (unless shown otherwise).
Do not fabricate reinforcing steel for walls until final footing elevations have been determined in the field.

Prestressing Steel:
Prestressing strands shall be Grade 270, 0.5 inch diameter, seven wire, bright, low-relaxation strands, conforming to AASHTO M203 (ASTM A416). Each strand shall be pretensioned to total load of 30,983 lbs. at which the initial pretensioning stress f'si = 0.75 (f's) = 202,500 psi. The final estimated effective prestress force per strand = 27,340 lbs.

Miscellaneous Structural Metal:
Steel sections shall conform to ASTM A36. Threaded rods, nuts, and smooth dowel bars shall conform to ASTM A307.
Hardened steel washers shall conform to ASTM F436. Welded shear connector studs shall conform to AAHSTO M169.

CONCRETE PLACEMENT:

Construction Joints:
At all construction joints, including joints between precast and cast-in-place concrete, the surface of hardened concrete shall be prepared in accordance with Standard Specification Section 552.12.

FOUNDATIONS:

Structural Excavation:
The contractor shall perform all the necessary excavation work to build the foundation to the required depths. Refer to the Geotechnical Report referenced below for a description of the materials anticipated to be encountered during excavation of the bridge site.

Spread Footing Foundation:
Footings shall be constructed to bear on a minimum of 12" Foundation Fill above undisturbed vegetated talus and/or debris flow deposits.
Place Foundation Fill per Standard Specification Section 208.08(d). Footing factored bearing resistance is 4,000 psf (equal to the ultimate bearing resistance times a resistance factor of 0.45).

Fill Materials:
Provide fill materials in conformance with the following Standard Specification Sections:
Foundation Fill: 704.01
Granular Backfill: 703.03
Select Granular Backfill: 704.08

Geotechnical Report:
For boring logs, seismic parameters, and other geotechnical information, see Geotechnical Report, Historic Columbia River Highway State Trail Segment D, Hood River, Oregon prepared by Cornforth Consultants.

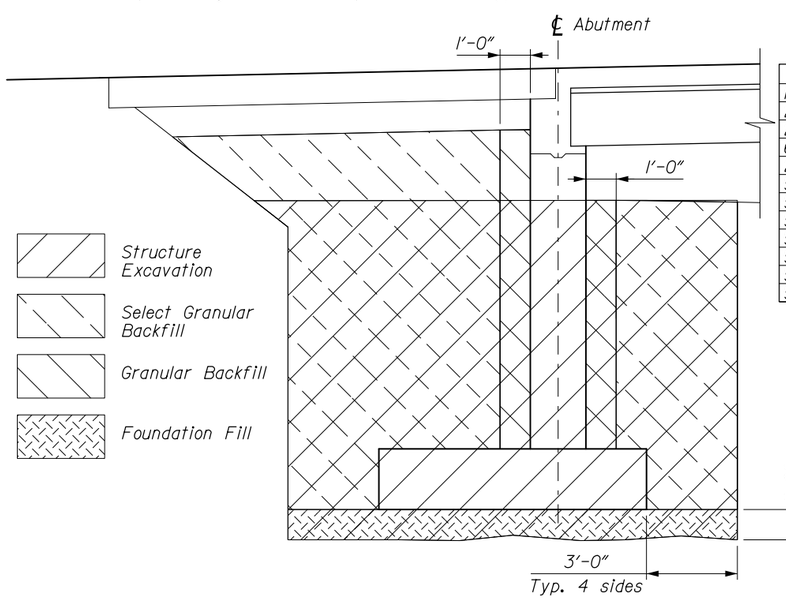

PAYLIMITS FOR STRUCTURE EXCAVATION & BACKFILL
No Scale

ESTIMATE

Item No.	Item	Quantity	Unit	Notes
20801-0000	Structure Excavation	317	CUYD	(1)
20802-0000	Foundation Fill	29	CUYD	(1)
60520-0000	Granular Backfill	26	CUYD	(1)
25510-0000	Select Granular Backfill	288	CUYD	(1)
55201-0200	Structural Concrete Class A(AE), Deck	41	CUYD	(1)(2)
55201-0200	Structural Concrete Class A(AE), Abutment	76	CUYD	(1)(3)
55210-0400	Precast Structural Concrete Class A(AE), Abutment Pilasters	19	CUYD	(1)(4)
55210-0400	Precast Structural Concrete Class A(AE), Wingwall Pilasters	6	CUYD	(1)(4)
55601-0500	Bridge railing, concrete, ornamental	136.8	LNFT	(1)(4)(5)
55302-3500	Precast, Prestressed Concrete Slab	144	LNFT	(1)(4)
55401-1000	Reinforcing Steel	17200	LB	(1)(6)

ESTIMATE NOTES:
(1) Contract Quantity
(2) Includes bridge deck and approach slab concrete. Includes cost of furnishing and installing all joint fillers, sealants and backer rods, as well as aggregate base and polyethylene sheeting for approach slabs.
(3) Includes cost of furnishing and installing weep holes and wire mesh.
(4) Includes cost of furnishing and erecting precast concrete elements, including all concrete, reinforcing steel, prestressing steel, inserts, temporary bearings, lifting devices, and any other materials required for manufacture and erection.
(5) Includes furnishing and installing concrete and reinforcing steel for the cast-in-place concrete curb and top rail portions of the ornamental rail.
(6) Includes all reinforcing steel in cast-in-place concrete elements except for steel in top of bridge rail and longitudinal bars in curb. Quantity does not include allowance for splices.

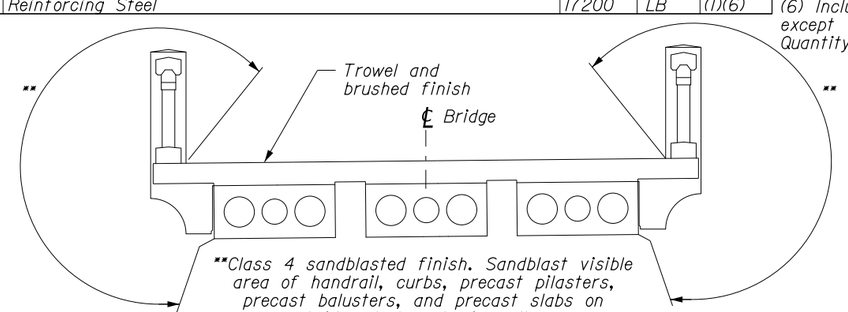

CONCRETE FINISH DIAGRAM
No Scale

PRELIMINARY
NOT FOR CONSTRUCTION

U.S. DEPARTMENT OF TRANSPORTATION
FEDERAL HIGHWAY ADMINISTRATION
WESTERN FEDERAL LANDS HIGHWAY DIVISION

HISTORIC COLUMBIA RIVER HIGHWAY TRAIL

OREGON

WARREN CREEK BRIDGE

GENERAL NOTES

NO.	DATE	BY	REVISIONS	NO.	DATE	BY	REVISIONS	DESIGNED BY	DRAWN BY	CHECKED BY	SCALE	PROJECT TEAM LEADER	BRIDGE DRAWING	DATE	DRAWING NO.
								G CONNER	D MONK	M MONCADA	NO SCALE	G CONNER	of	FEBRUARY 2015	L.2

12-Feb-2015 09:48 AM
...\OR10011LBF.dgn [int_f120]

STATE	PROJECT	SHEET NUMBER
OR	PFH 163(19)	L.3

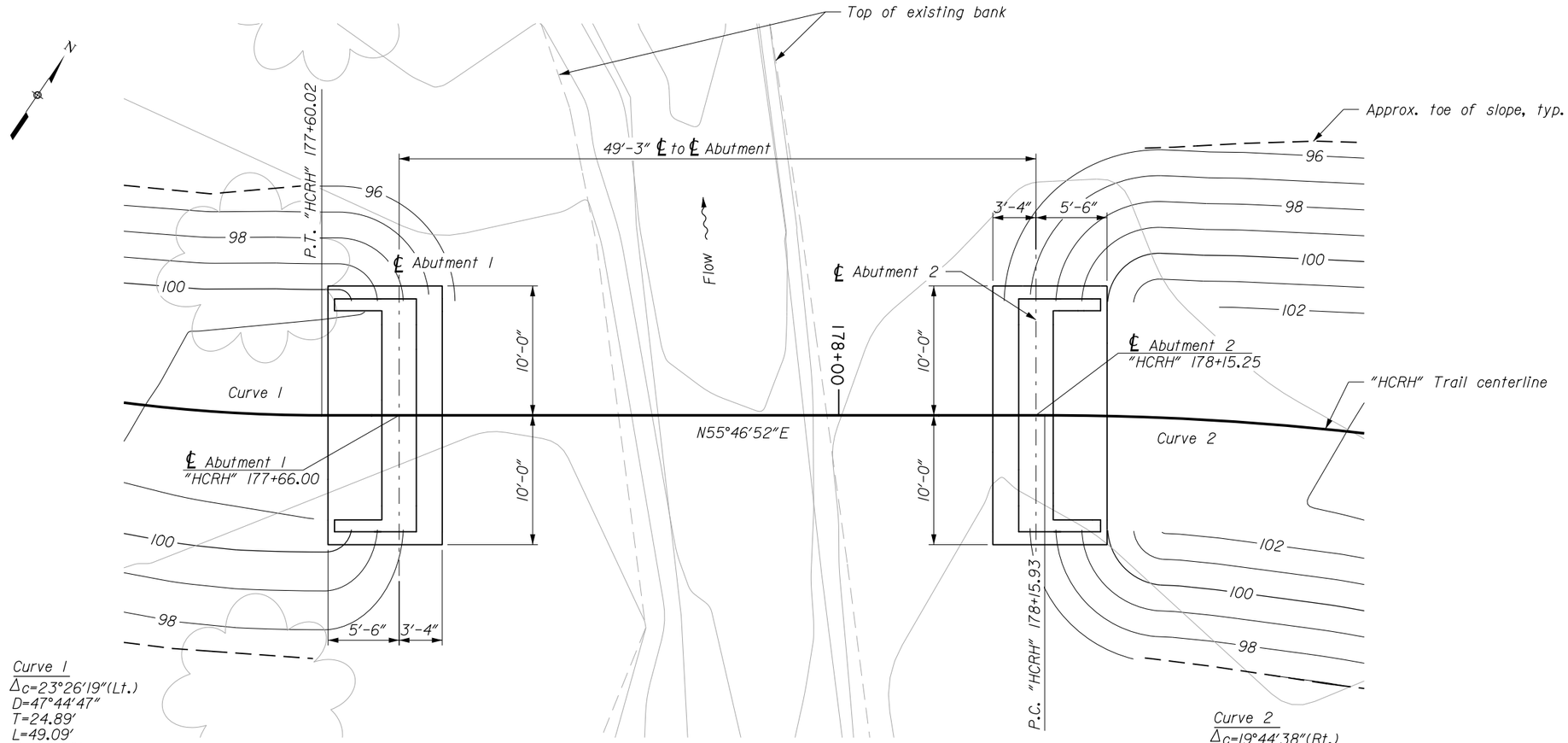

Curve 1
Δ_c=23°26'19"(Lt.)
D=47°44'47"
T=24.89'
L=49.09'
R=120.00'

Curve 2
Δ_c=19°44'38"(Rt.)
D=26°02'37"
T=38.28'
L=75.81'
R=220.00'

FOUNDATION PLAN
Scale: 1" = 10'-0"

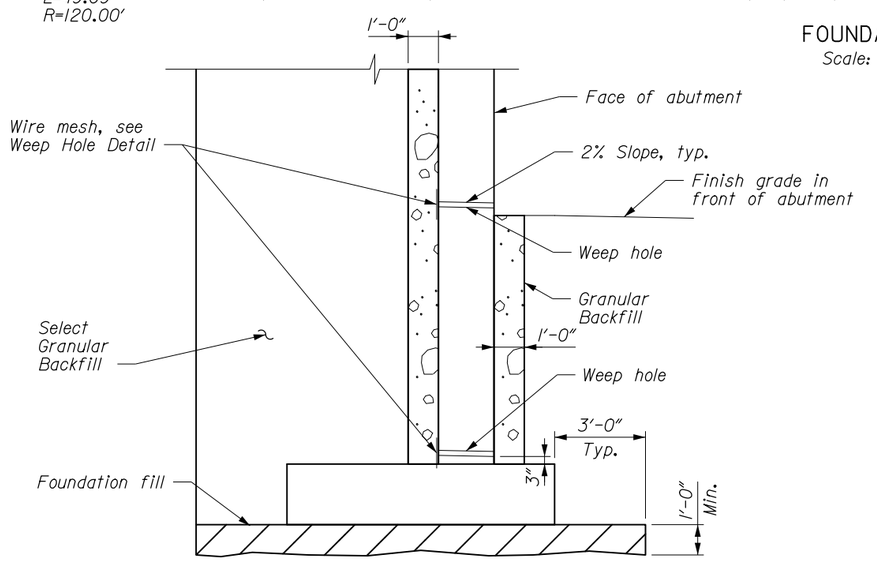

ABUTMENT BACKFILL DETAIL
Scale: 1" = 5'-0"

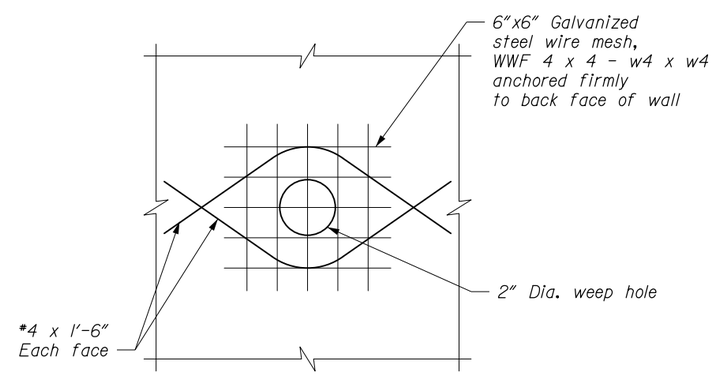

WEEP HOLE DETAIL
No Scale

PRELIMINARY
NOT FOR CONSTRUCTION

U.S. DEPARTMENT OF TRANSPORTATION
FEDERAL HIGHWAY ADMINISTRATION
WESTERN FEDERAL LANDS HIGHWAY DIVISION

HISTORIC COLUMBIA RIVER HIGHWAY TRAIL

OREGON

WARREN CREEK BRIDGE

FOUNDATION PLAN

NO.	DATE	BY	REVISIONS	NO.	DATE	BY	REVISIONS	DESIGNED BY	DRAWN BY	CHECKED BY	SCALE	PROJECT TEAM LEADER	BRIDGE DRAWING	DATE	DRAWING NO.
								G CONNER	D MONK	M MONCADA	AS SHOWN	G CONNER	of	FEBRUARY 2015	L.3

12-Feb-2015 09:48 AM

...#ORIOILCF.dgn [int_ft2D]

STATE	PROJECT	SHEET NUMBER
OR	PFH 163(19)	L.4

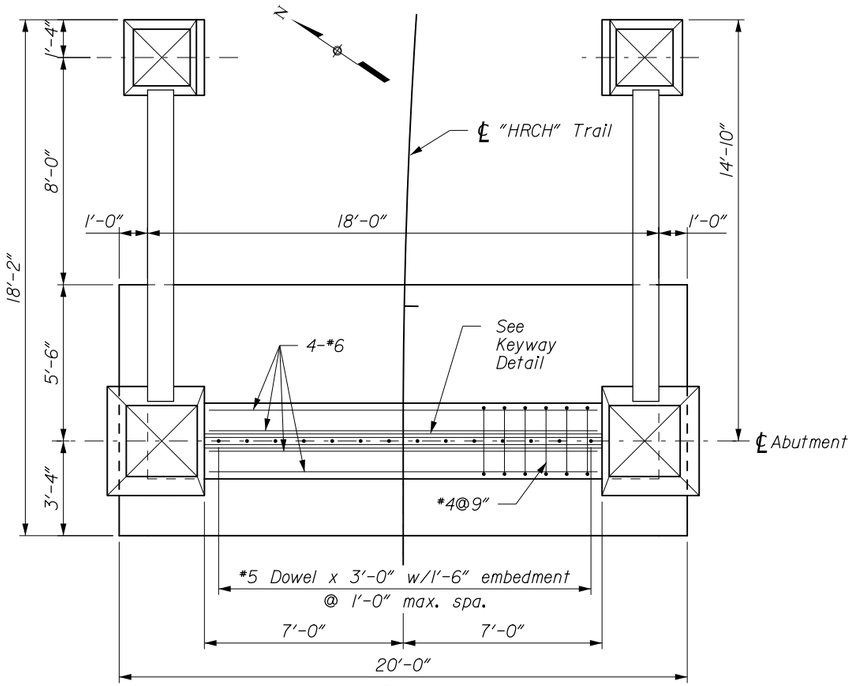

PLAN
Scale: 3/16" = 1'-0"

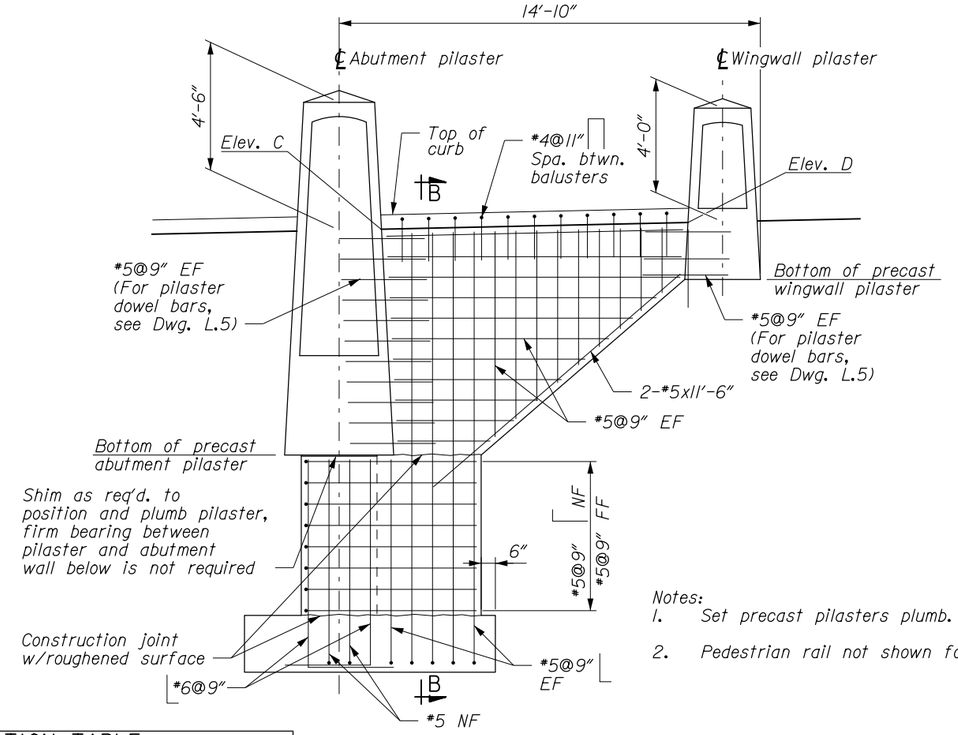

WINGWALL ELEVATION
Scale: 3/16" = 1'-0"

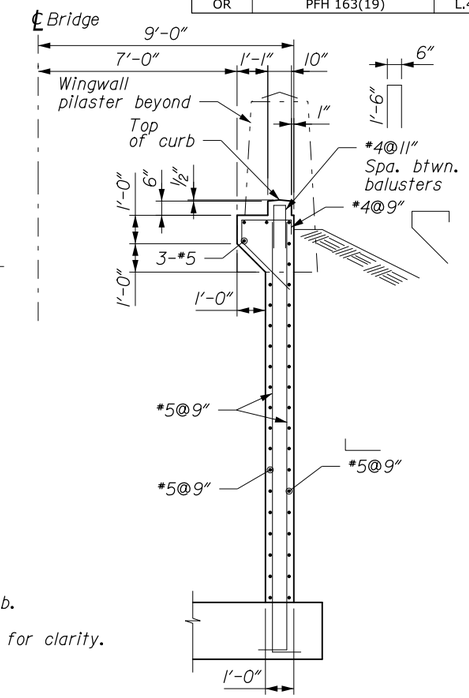

SECTION B-B
Scale: 3/16" = 1'-0"

Notes:
1. Set precast pilasters plumb.
2. Pedestrian rail not shown for clarity.

ELEVATION TABLE	A	B	C Lt.	C Rt.	D Lt.	D Rt.
Abutment 1	98.67	98.81	101.32	101.49	101.08	101.27
Abutment 2	99.73	99.87	102.45	102.62	102.67	102.86

Elevations are based on temporary bearing pad thickness of 2" (see "End Diaphragm Detail at Slab" & "Haunch Detail" on Dwg. L.7.

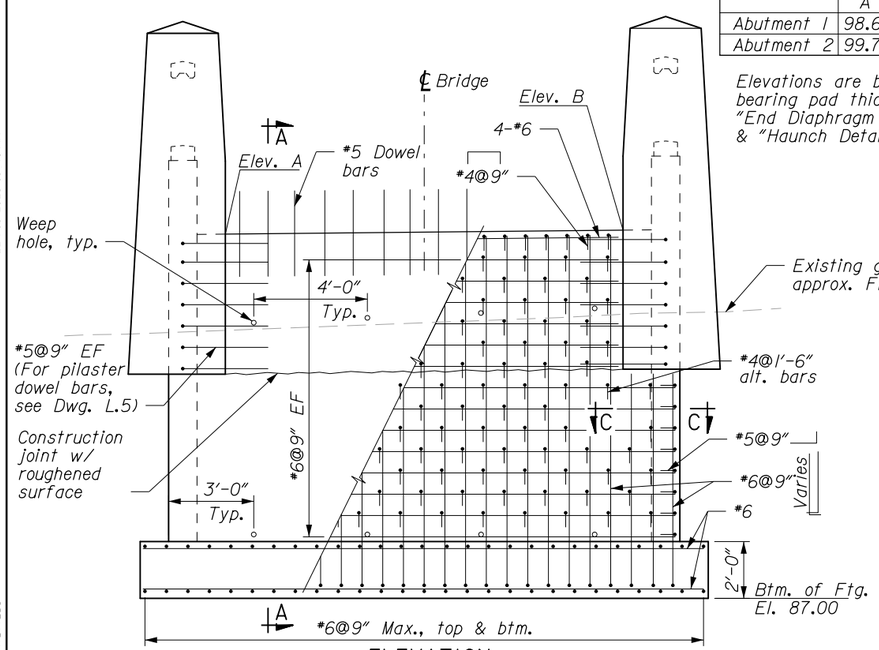

ELEVATION
Scale: 3/16" = 1'-0"
Abutment 2 shown.
Abutment 1 similar

Note:
Pedestrian rail not shown for clarity.

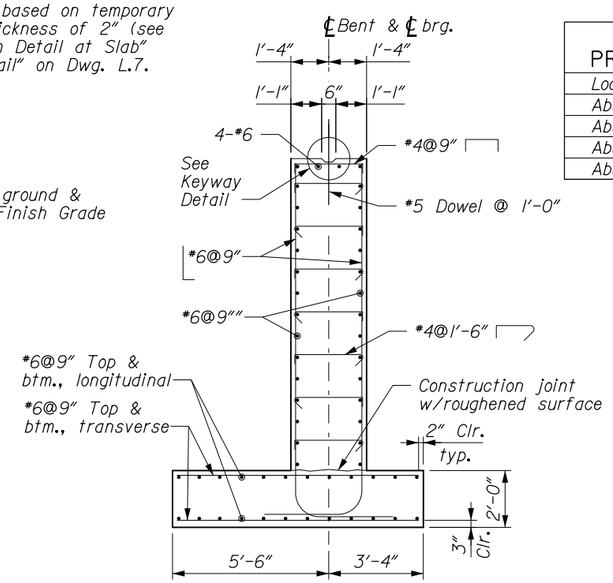

SECTION A-A
Scale: 3/16" = 1'-0"

BOTTOM OF PRECAST PILASTER ELEVATION		
Location	Abutment	Wingwall
Abut 1 Lt.	93.87	99.06
Abut 1 Rt.	94.02	99.25
Abut 2 Lt.	94.93	100.69
Abut 2 Rt.	95.08	100.88

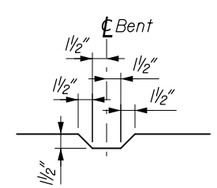

KEYWAY DETAIL
No Scale

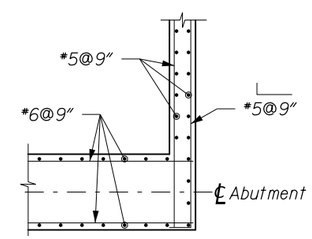

SECTION C-C
Scale: 3/16" = 1'-0"

PRELIMINARY
NOT FOR CONSTRUCTION

U.S. DEPARTMENT OF TRANSPORTATION
FEDERAL HIGHWAY ADMINISTRATION
WESTERN FEDERAL LANDS HIGHWAY DIVISION

HISTORIC COLUMBIA RIVER HIGHWAY TRAIL

OREGON

WARREN CREEK BRIDGE

ABUTMENT DETAILS

NO.	DATE	BY	REVISIONS	NO.	DATE	BY	REVISIONS

DESIGNED BY	DRAWN BY	CHECKED BY	SCALE	PROJECT TEAM LEADER	BRIDGE DRAWING	DATE	DRAWING NO.
B MAUELSHAGEN	D MONK	M MONCADA	AS SHOWN	G CONNER	of	FEBRUARY 2015	L.4

12-Feb-2015 09:48 AM
...\OR10011.df.dgn [int_f120]

STATE	PROJECT	SHEET NUMBER
OR	PFH 163(19)	L.5

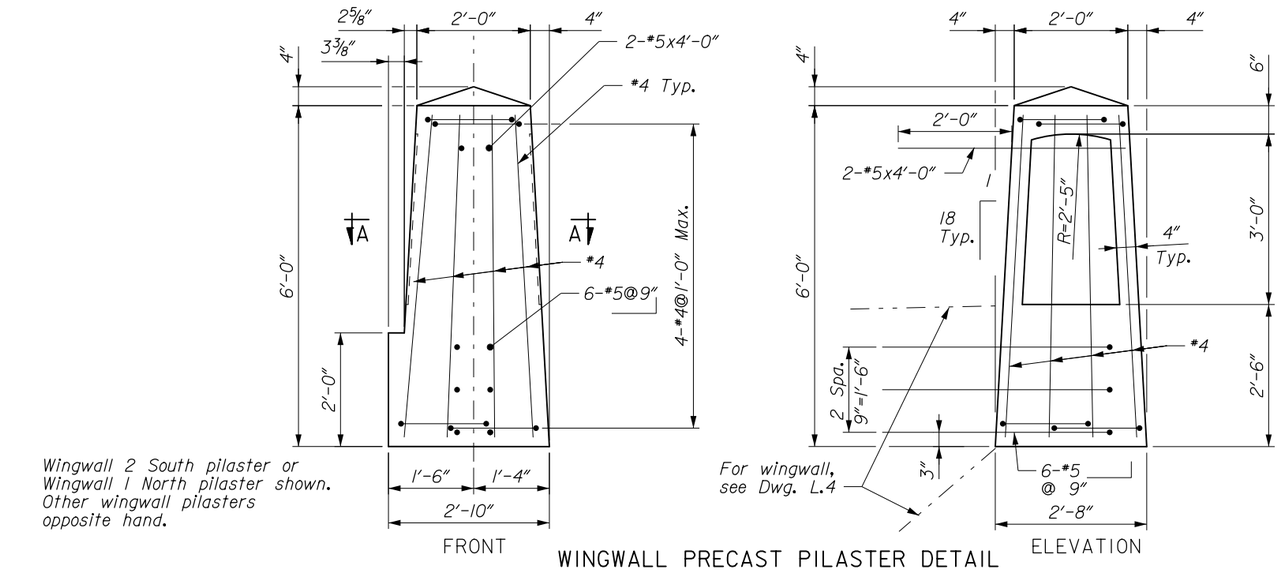

Wingwall 2 South pilaster or Wingwall 1 North pilaster shown. Other wingwall pilasters opposite hand.

For wingwall, see Dwg. L.4

WINGWALL PRECAST PILASTER DETAIL

Scale: 3/8" = 1'-0"

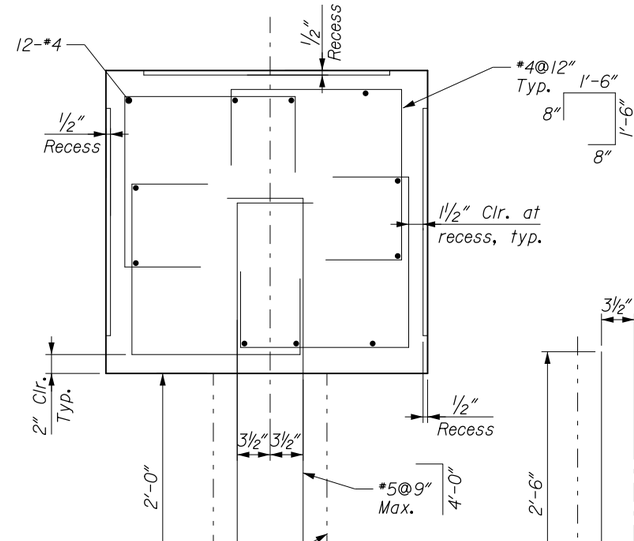

SECTION A-A

Scale: 3/4" = 1'-0"

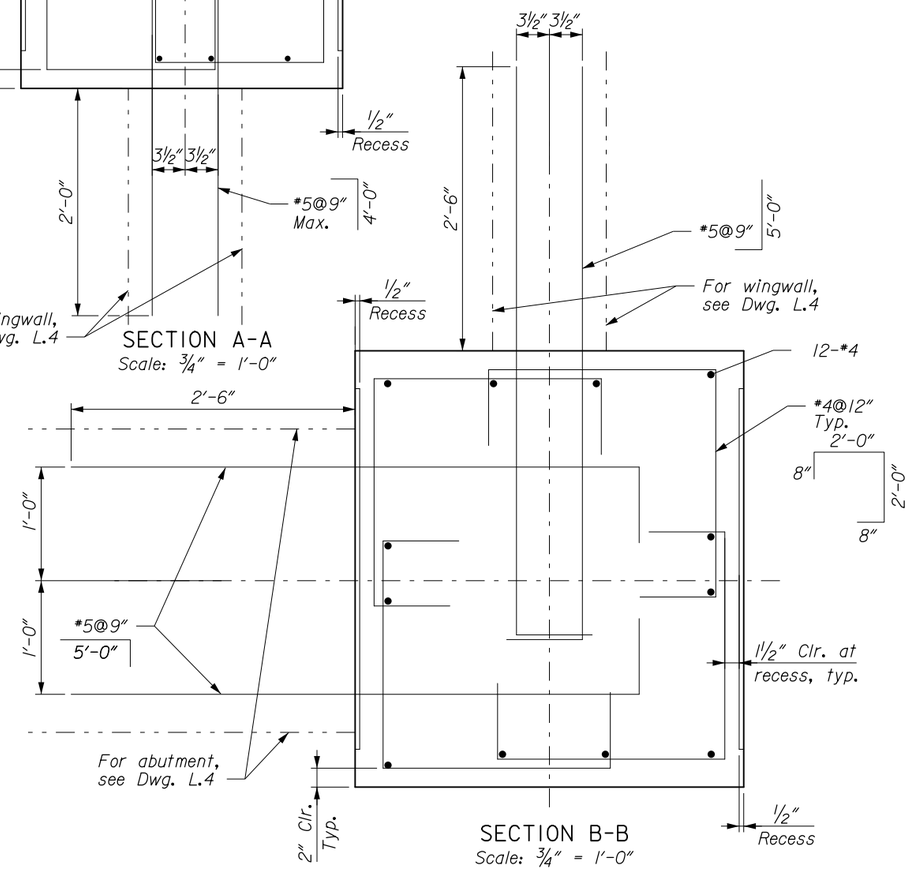

SECTION B-B

Scale: 3/4" = 1'-0"

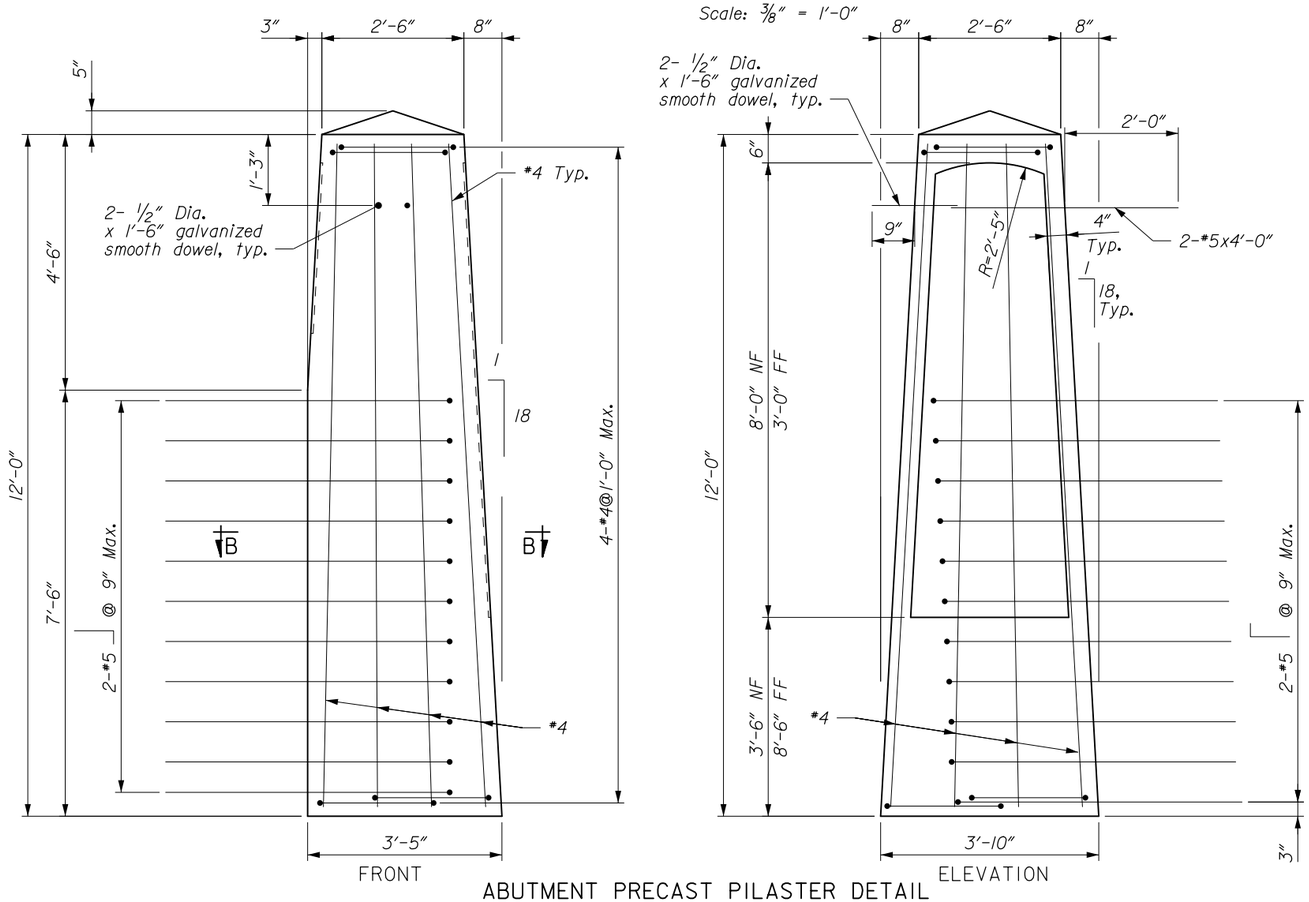

ABUTMENT PRECAST PILASTER DETAIL

Scale: 3/8" = 1'-0"

PRELIMINARY
NOT FOR CONSTRUCTION

Precast pilaster lifting attachments shall be provided in areas concealed by concrete.

Abutment 2 South pilaster or Abutment 1 North pilaster shown. Other abutment pilasters opposite hand.

U.S. DEPARTMENT OF TRANSPORTATION
FEDERAL HIGHWAY ADMINISTRATION
WESTERN FEDERAL LANDS HIGHWAY DIVISION

HISTORIC COLUMBIA RIVER HIGHWAY TRAIL

OREGON

WARREN CREEK BRIDGE

ABUTMENT DETAILS

NO.	DATE	BY	REVISIONS	NO.	DATE	BY	REVISIONS	DESIGNED BY	DRAWN BY	CHECKED BY	SCALE	PROJECT TEAM LEADER	BRIDGE DRAWING	DATE	DRAWING NO.
								B MAUELSHAGEN	D MONK	M MONCADA	AS SHOWN	G CONNER	of	FEBRUARY 2015	L.5

...#OR100ILEF.dgn [int_ft2D] 12-Feb-2015 09:48 AM

STATE	PROJECT	SHEET NUMBER
OR	PFH 163(19)	L.6

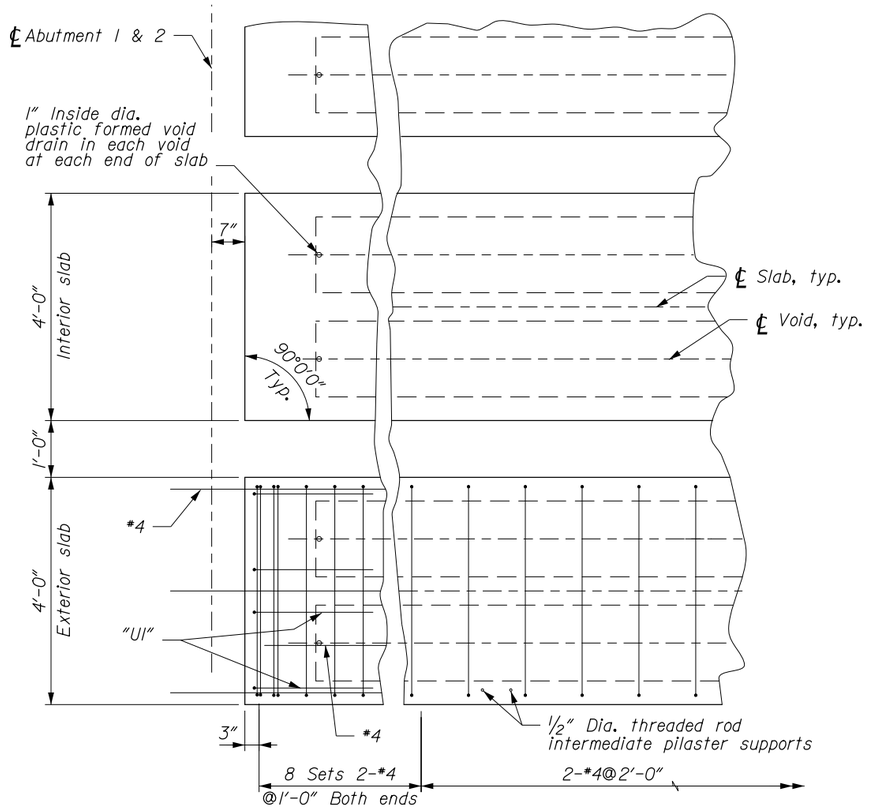

SLAB PLAN
No Scale

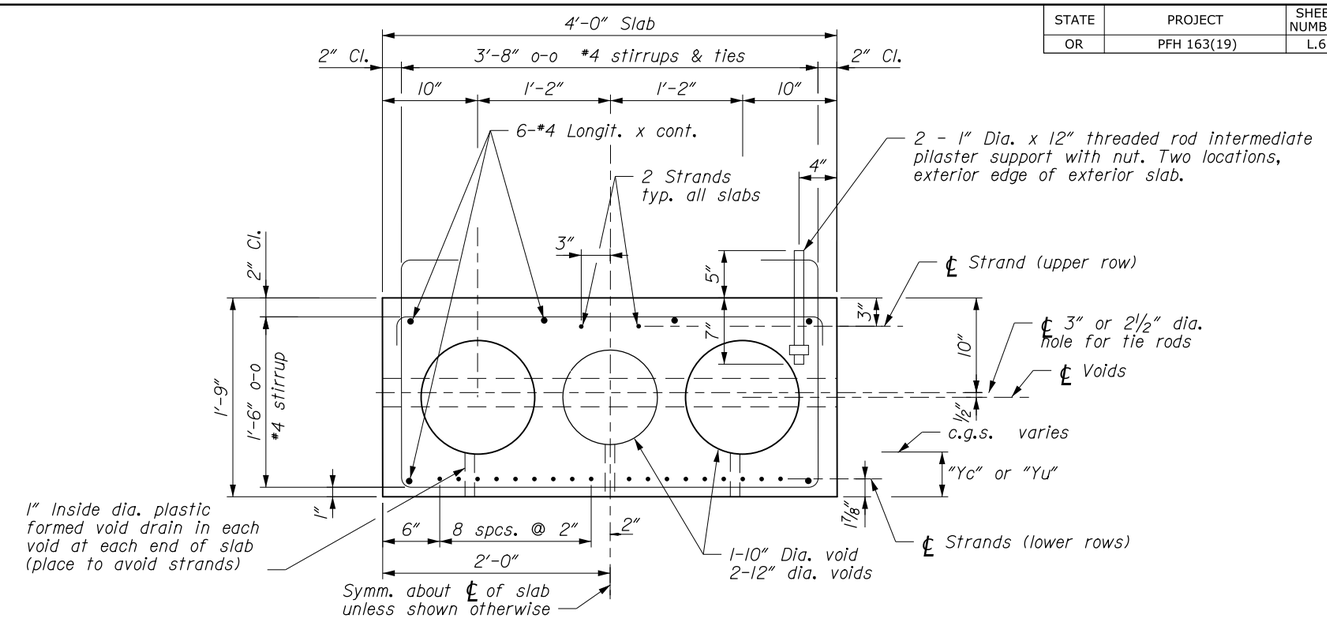

TYPICAL SECTION
Scale: 3/4" = 1'-0"

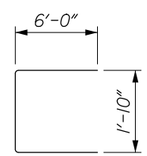

*5 "U1" BAR
(8-req'd. per slab)

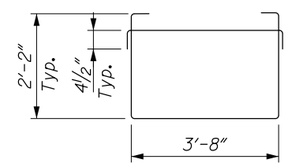

*4 STIRRUP

SECTION PROPERTIES

Area = 696 in²
c.g. = 10.43 in
I = 34,152 in 4
St = 3230 in³
Sb = 3275 in³
Weight = 749 lbs/ft
J = 77,100 in 4
K = 0.73
V/S = 5.04
Form wt = 16 lbs/ft (tubes)
Total wt w/forms= 765 lbs/ft

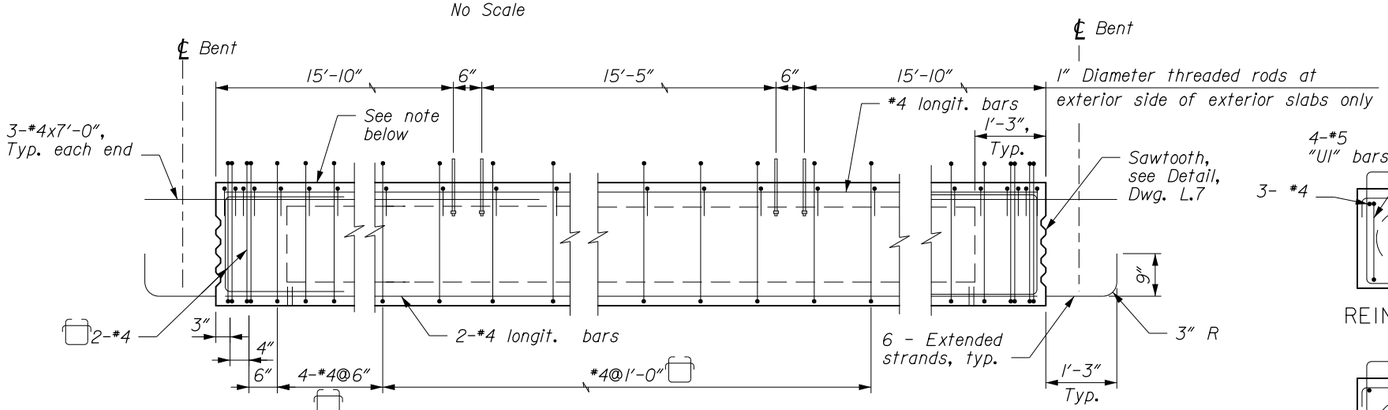

Note:
Artifically roughen surface to 1/4" amplitude in transverse direction.

SLAB ELEVATION
No Scale

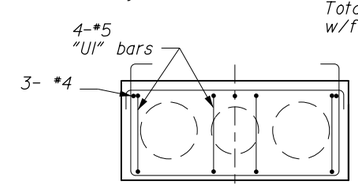

REINFORCING AT END

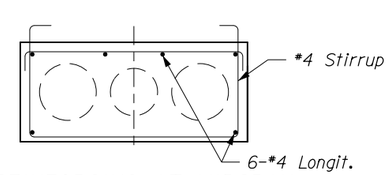

REINFORCING AT MIDSPAN

Note:
For reinforcing not shown see Typical Section.

PRELIMINARY
NOT FOR CONSTRUCTION

U.S. DEPARTMENT OF TRANSPORTATION
FEDERAL HIGHWAY ADMINISTRATION
WESTERN FEDERAL LANDS HIGHWAY DIVISION

HISTORIC COLUMBIA RIVER HIGHWAY TRAIL

OREGON

WARREN CREEK BRIDGE

SLAB DETAILS

NO.	DATE	BY	REVISIONS	NO.	DATE	BY	REVISIONS	DESIGNED BY	DRAWN BY	CHECKED BY	SCALE	PROJECT TEAM LEADER	BRIDGE DRAWING	DATE	DRAWING NO.
								B MAUELSHAGEN	D MONK	M MONCADA	AS SHOWN	G CONNER	of	FEBRUARY 2015	L.6

12-Feb-2015 09:49 AM

...\OR100LFF.dgn [int_ft20]

STATE	PROJECT	SHEET NUMBER
OR	PFH 163(19)	L.7

21" STANDARD PRECAST PRESTRESSED SLABS

Number of Slabs Req'd.	Span No.	Horiz. Length 0-0 at CL, ft (after shortening)	Skew Angle Back	Skew Angle Ahead	No. Top Strands	No. Bottom Strands	Total Strands	Debonded Strands	Distance "Yc" to c.g. strand at midspan, inches	Distance "Yu" to c.g. strand at midspan, inches omitting top strand	Concrete Class A= (psi)	Min. Concrete Strength at transfer of Prestress, psi	Estimated initial Strand Stress Loss, Ksi	Upword at transfer of prestress	Upward 3 mos. After transfer of prestress	Instantaneous downward due to deck & rail dead load	Estimated shortening 2 weeks after transfer of prestress
3	1	48'-1"	0	0	2	18	20	0	3.49"	1.88"	7000	5000	11.8	1.60"	1.05"	0.61"	3/16"

A Concrete deck @ midspan _ _ _ _ _ _ _ _ _ _ _ _ _ _ 9"
B Anticipated camber _ _ _ _ _ _ _ _ _ _ _ _ _ _ _ _ _ _ 1.05"
C Downward due to concrete deck & Rail _ _ _ _ _ _ _ _ 0.61"
D Adjustment due to grade _ _ _ _ _ _ _ _ _ _ _ _ _ _ 0"
E Adjustment for rebar clearance _ _ _ _ _ _ _ _ _ _ _ -
Concrete deck @ Bents (A + B - C + D + E) _ _ _ _ 9.44"

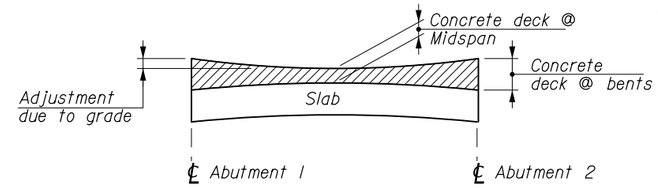

HAUNCH DETAIL
No Scale

TOP OF TEMPORARY BEARING ELEVATION AT ℄ SLAB		
Slab	Abutment 1	Abutment 2
1	98.87	99.90
2	98.92	99.95
3	98.97	100.00

Note:
Elevations shown are at ℄ slab.

TEMPORARY BEARING TABLE

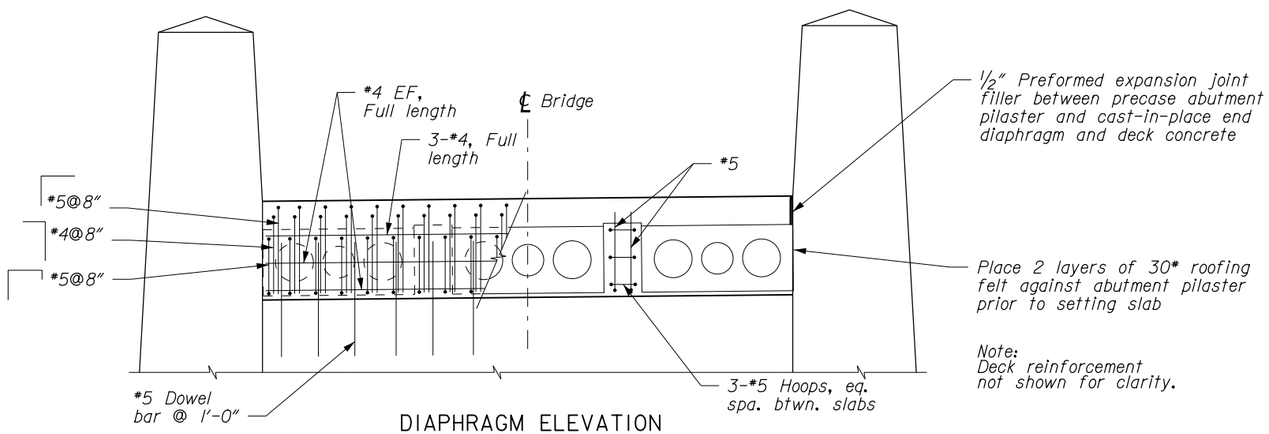

DIAPHRAGM ELEVATION
Scale: 1/4" = 1'-0"

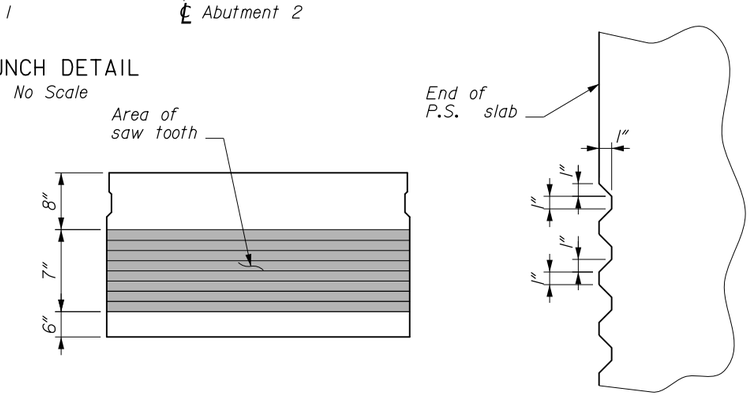

SAW TOOTH DETAIL
No Scale

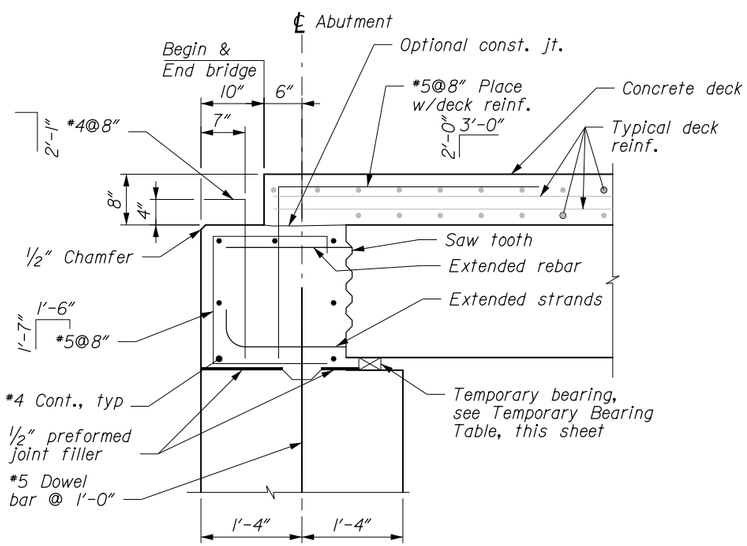

END DIAPHRAGM DETAIL AT SLAB
Scale: 1/2" = 1'-0"

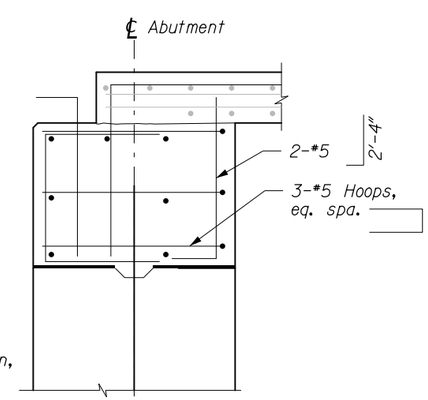

Note:
For details not shown, see "End Diaphragm Details at Slab".

END DIAPHRAGM DETAIL BETWEEN SLABS
Scale: 1/2" = 1'-0"

PRELIMINARY
NOT FOR CONSTRUCTION

U.S. DEPARTMENT OF TRANSPORTATION
FEDERAL HIGHWAY ADMINISTRATION
WESTERN FEDERAL LANDS HIGHWAY DIVISION

HISTORIC COLUMBIA RIVER HIGHWAY TRAIL

OREGON

WARREN CREEK BRIDGE

SLAB SCHEDULE & DETAILS

NO.	DATE	BY	REVISIONS	NO.	DATE	BY	REVISIONS	DESIGNED BY	DRAWN BY	CHECKED BY	SCALE	PROJECT TEAM LEADER	BRIDGE DRAWING	DATE	DRAWING NO.
								B MAUELSHAGEN	D MONK	M MONCADA	AS SHOWN	G CONNER	of	FEBRUARY 2015	L.7

...@R1001LgF.dgn [Int_f120] 12-Feb-2015 09:49 AM

STATE	PROJECT	SHEET NUMBER
OR	PFH 163(19)	L.8

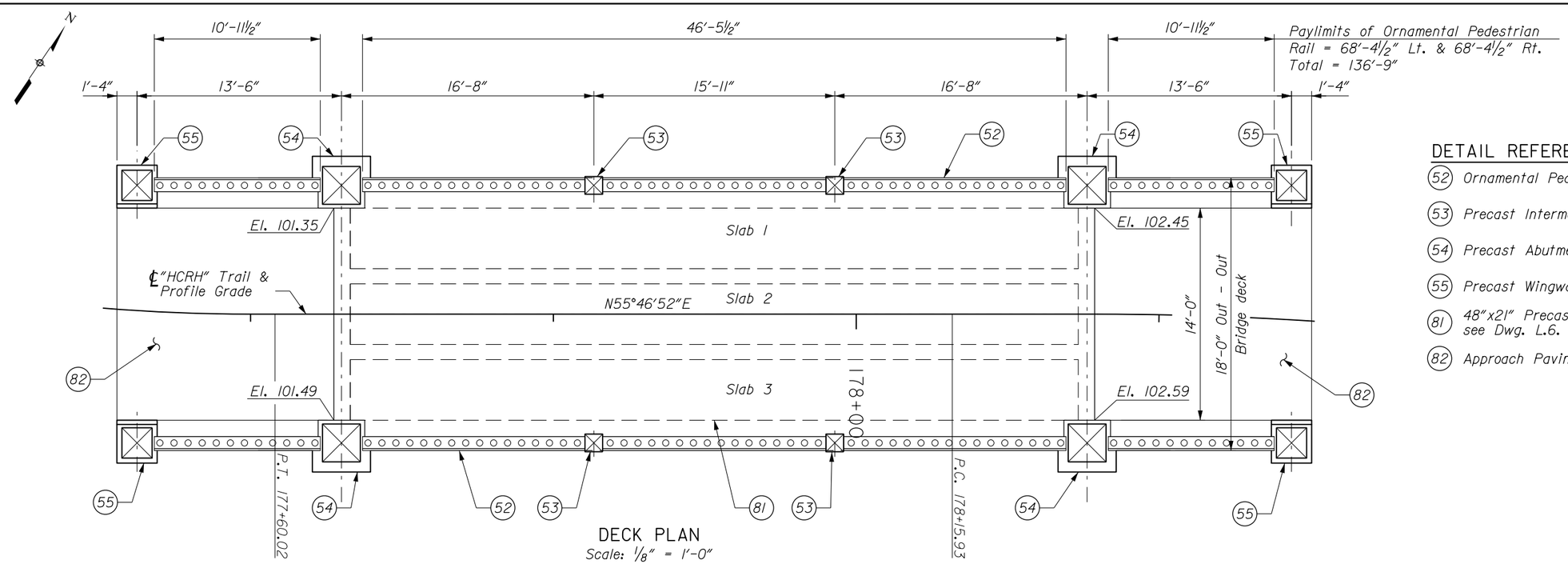

DECK PLAN
Scale: ⅛" = 1'-0"

DETAIL REFERENCE NUMBERS

(52) Ornamental Pedestrian Rail, see Dwg. L.9.

(53) Precast Intermediate Pilaster, see Dwg. L.10.

(54) Precast Abutment Pilaster, see Dwg. L.5.

(55) Precast Wingwall Pilaster, see Dwg. L.5.

(81) 48"x21" Precast, Prestressed Concrete Slabs, see Dwg. L.6.

(82) Approach Paving, see Dwg. L.11.

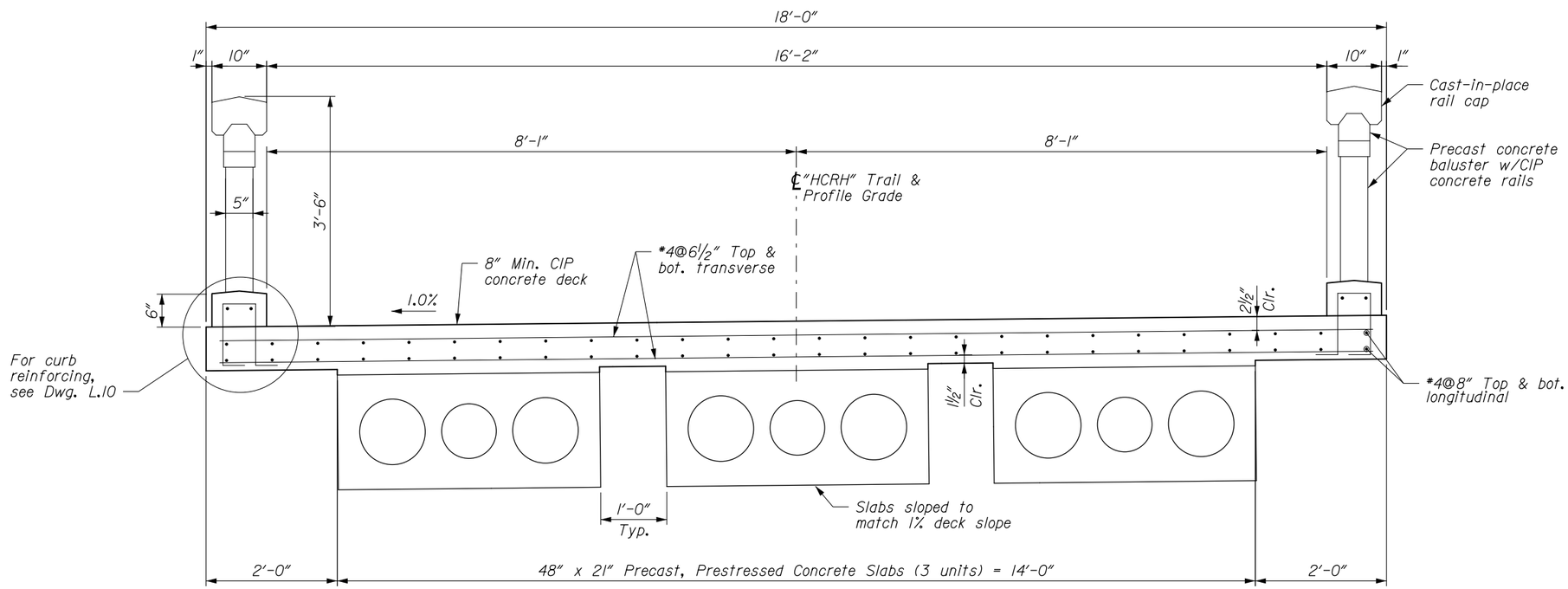

TYPICAL SECTION
Scale: ½" = 1'-0"

PRELIMINARY
NOT FOR CONSTRUCTION

U.S. DEPARTMENT OF TRANSPORTATION
FEDERAL HIGHWAY ADMINISTRATION
WESTERN FEDERAL LANDS HIGHWAY DIVISION

HISTORIC COLUMBIA RIVER HIGHWAY TRAIL

OREGON

WARREN CREEK BRIDGE

DECK PLAN & TYPICAL SECTION

NO.	DATE	BY	REVISIONS	NO.	DATE	BY	REVISIONS	DESIGNED BY	DRAWN BY	CHECKED BY	SCALE	PROJECT TEAM LEADER	BRIDGE DRAWING	DATE	DRAWING NO.
								B MAUELSHAGEN	D MONK	M MONCADA	AS SHOWN	G CONNER	of	FEBRUARY 2015	L.8

12-Feb-2015 09:49 AM

...\#OR100LhF.dgn [Int_ft2D]

STATE	PROJECT	SHEET NUMBER
OR	PFH 163(19)	L.9

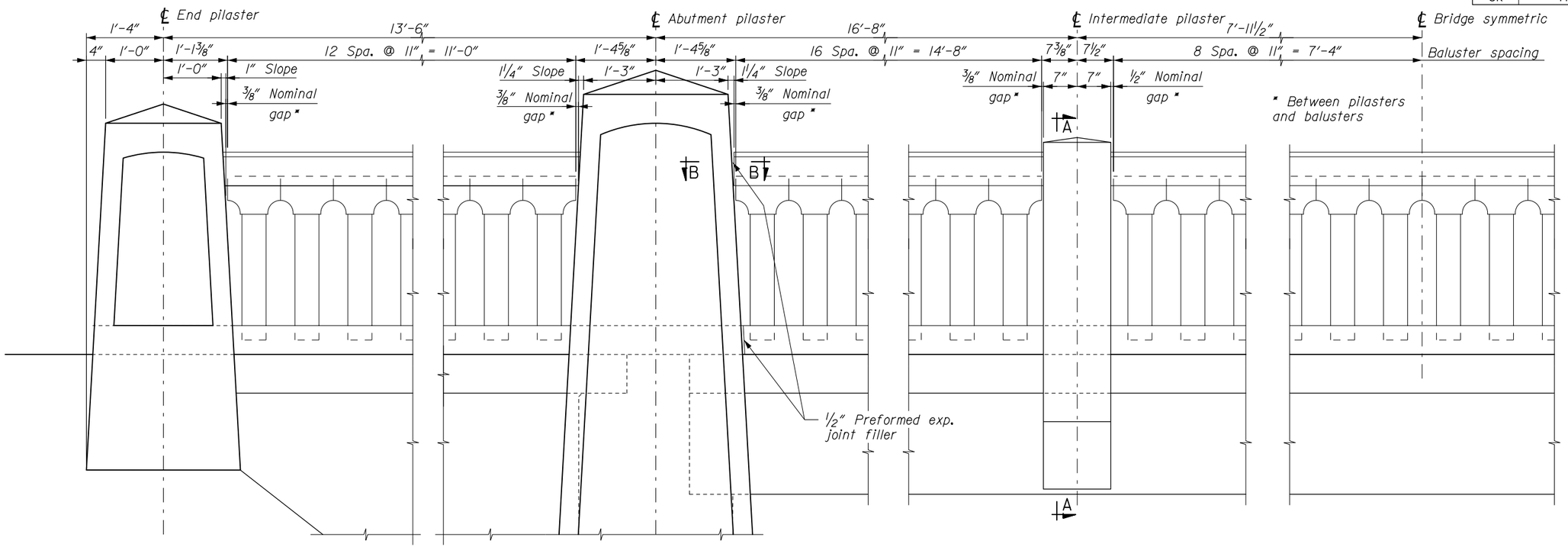

RAIL ELEVATION
Scale: ½" = 1'-0"

Note:
Set pilasters and balusters plumb.

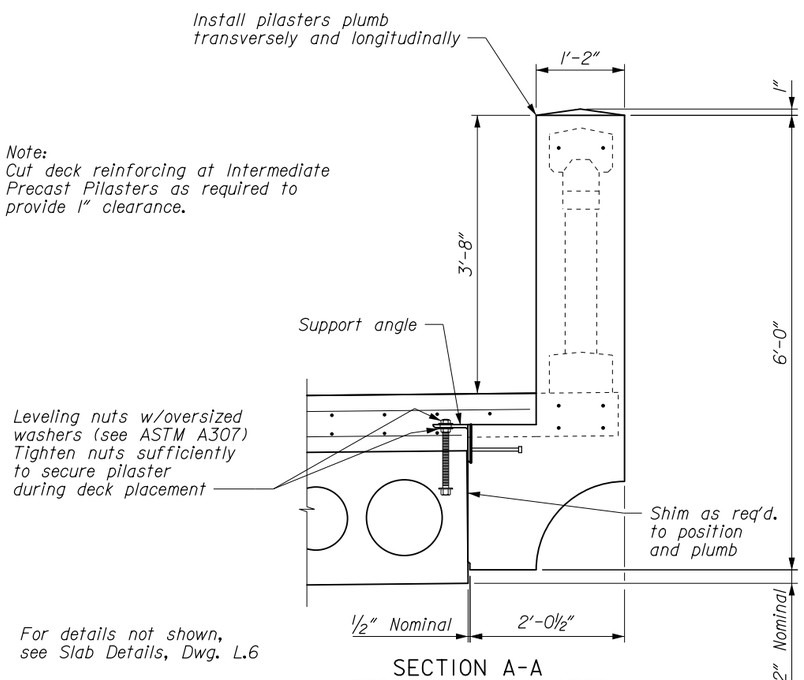

SECTION A-A
INTERMEDIATE PILASTER
Scale: ½" = 1'-0"

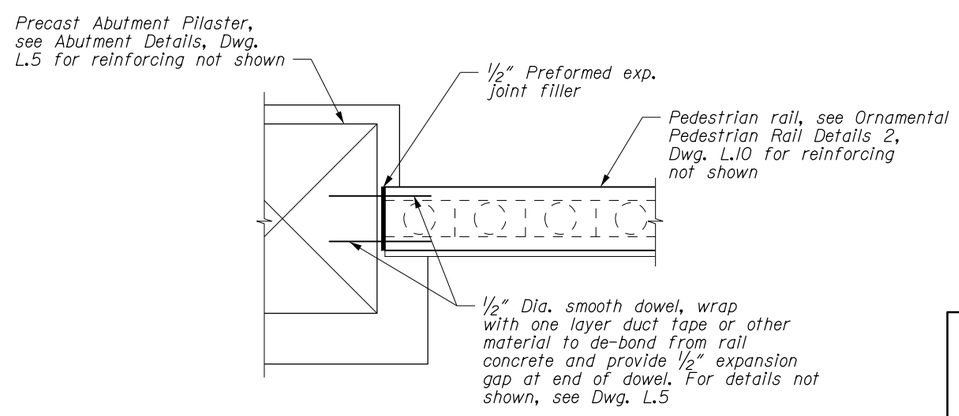

SECTION B-B
RAIL JOINT AT ABUTMENT
Scale: ½" = 1'-0"

U.S. DEPARTMENT OF TRANSPORTATION
FEDERAL HIGHWAY ADMINISTRATION
WESTERN FEDERAL LANDS HIGHWAY DIVISION

HISTORIC COLUMBIA RIVER HIGHWAY TRAIL

OREGON

WARREN CREEK BRIDGE

ORNAMENTAL PEDESTRIAN RAIL DETAILS 1

NO.	DATE	BY	REVISIONS	NO.	DATE	BY	REVISIONS	DESIGNED BY	DRAWN BY	CHECKED BY	SCALE	PROJECT TEAM LEADER	BRIDGE DRAWING	DATE	DRAWING NO.
								G CONNER	D MONK	M MONCADA	AS SHOWN	G CONNER	of	FEBRUARY 2015	L.9

12-Feb-2015 09:49 AM

...#OR100LIF.dgn [Int_t120]

STATE	PROJECT	SHEET NUMBER
OR	PFH 163(19)	L.10

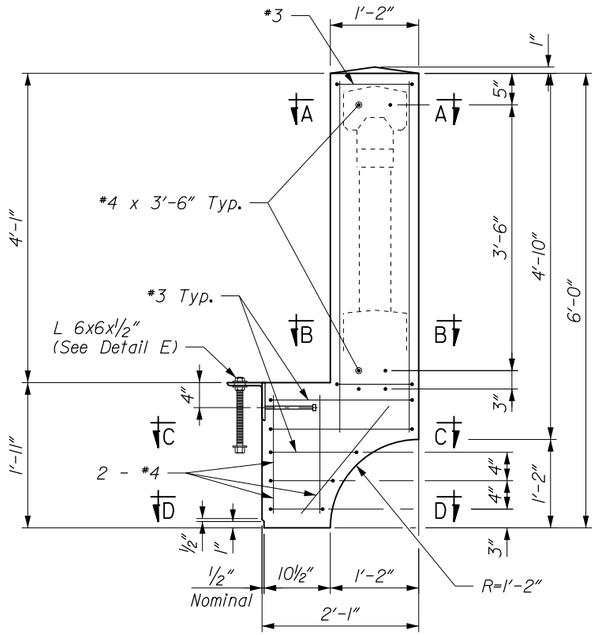

PRECAST INTERMEDIATE PILASTER DETAIL
Scale: 1/2" = 1'-0"

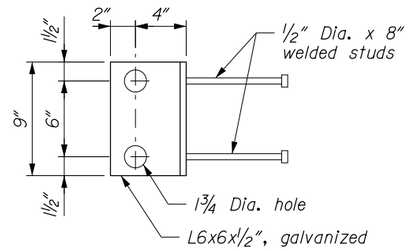

DETAIL E
Scale: 1" = 1'-0"

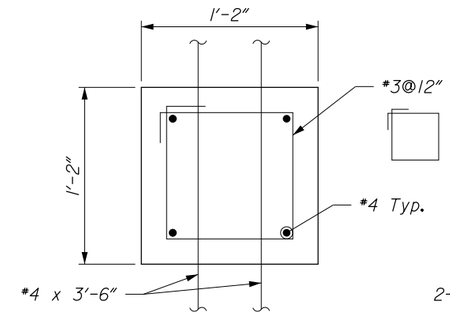

SECTION A-A
Scale: 1" = 1'-0"

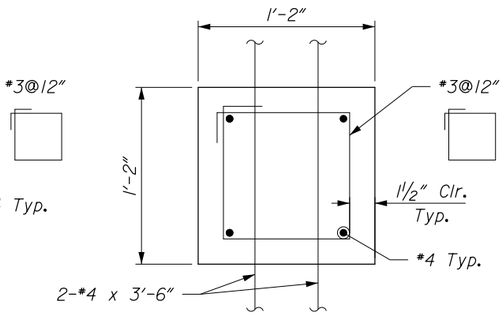

SECTION B-B
Scale: 1" = 1'-0"

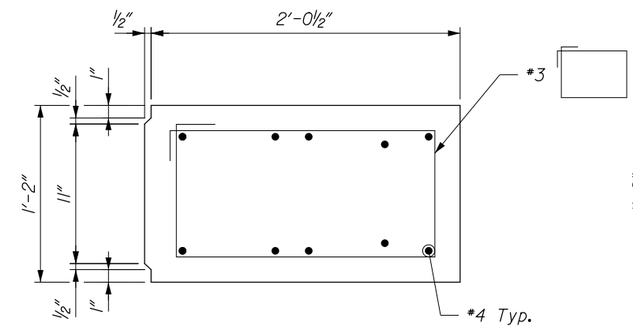

SECTION C-C
Scale: 1" = 1'-0"

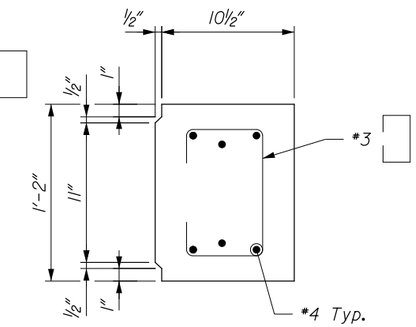

SECTION D-D
Scale: 1" = 1'-0"

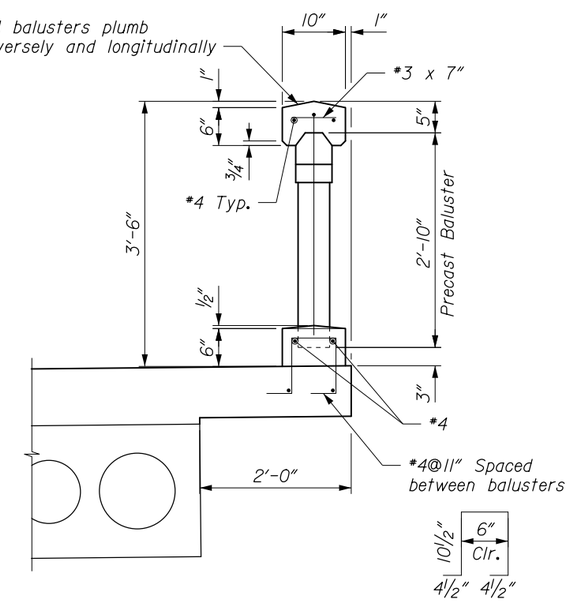

PEDESTRIAN RAIL TYPICAL SECTION
Scale: 1/2" = 1'-0"

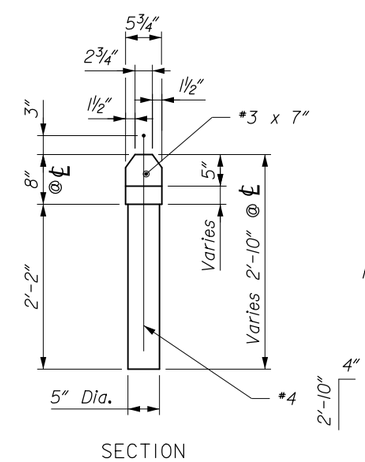

SECTION

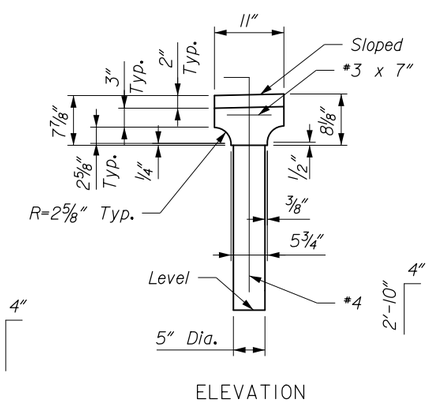

ELEVATION

PRECAST BALUSTER DETAIL
Scale: 1/2" = 1'-0"

U.S. DEPARTMENT OF TRANSPORTATION
FEDERAL HIGHWAY ADMINISTRATION
WESTERN FEDERAL LANDS HIGHWAY DIVISION

HISTORIC COLUMBIA RIVER HIGHWAY TRAIL

OREGON

WARREN CREEK BRIDGE

ORNAMENTAL PEDESTRIAN RAIL DETAILS 2

NO.	DATE	BY	REVISIONS	NO.	DATE	BY	REVISIONS	DESIGNED BY	DRAWN BY	CHECKED BY	SCALE	PROJECT TEAM LEADER	BRIDGE DRAWING	DATE	DRAWING NO.
								G CONNER	D MONK	M MONCADA	AS SHOWN	G CONNER	of	FEBRUARY 2015	L.10

12-Feb-2015 09:49 AM

...#OR100ILJF.dgn [Int_f12D]

STATE	PROJECT	SHEET NUMBER
OR	PFH 163(19)	L.11

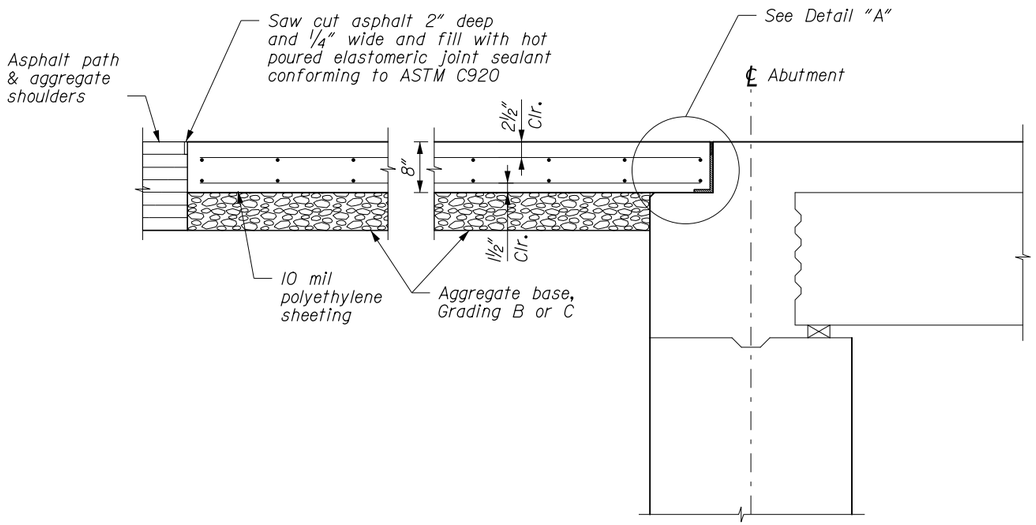

LONGITUDINAL SECTION
Scale: 1/2" = 1'-0"

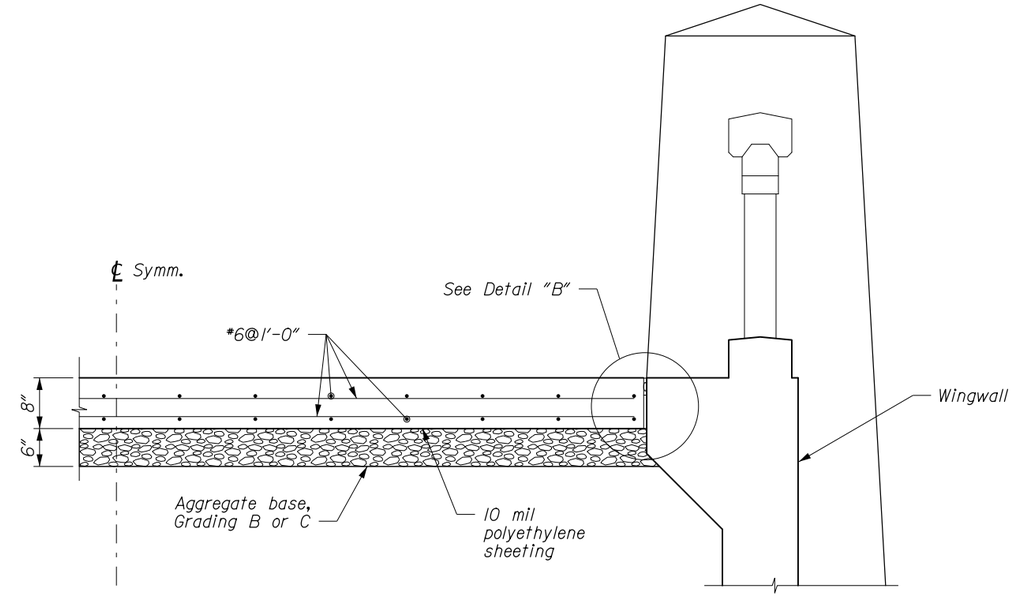

TRANSVERSE SECTION
Scale: 1/2" = 1'-0"

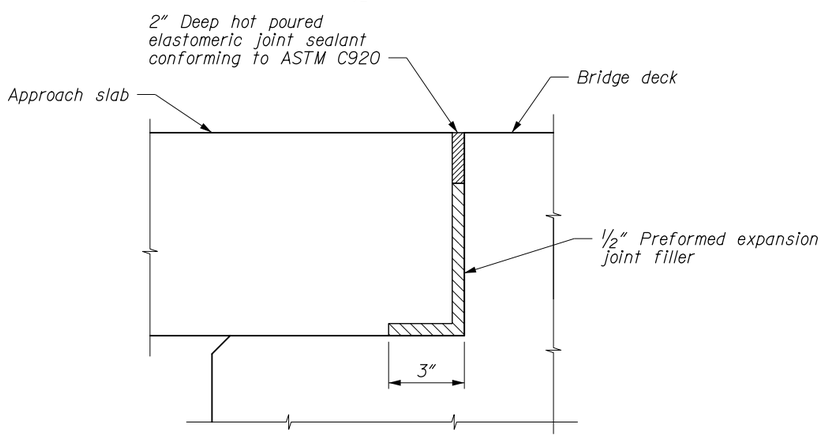

DETAIL "A"
No Scale

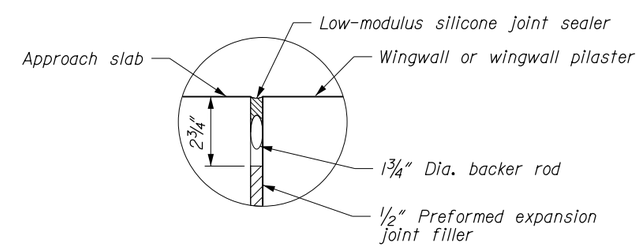

DETAIL "B"
No Scale

PRELIMINARY
NOT FOR CONSTRUCTION

U.S. DEPARTMENT OF TRANSPORTATION
FEDERAL HIGHWAY ADMINISTRATION
WESTERN FEDERAL LANDS HIGHWAY DIVISION

HISTORIC COLUMBIA RIVER HIGHWAY TRAIL

OREGON

WARREN CREEK BRIDGE

APPROACH SLAB

NO.	DATE	BY	REVISIONS	NO.	DATE	BY	REVISIONS	DESIGNED BY	DRAWN BY	CHECKED BY	SCALE	PROJECT TEAM LEADER	BRIDGE DRAWING	DATE	DRAWING NO.
								G CONNER	D MONK	M MONCADA	AS SHOWN	G CONNER	of	FEBRUARY 2015	L.11

12-Feb-2015 09:49 AM

...\#OR100ILKF.dgn [int_ft2D]

STATE	PROJECT	SHEET NUMBER
OR	PFH 163(19)	M.1

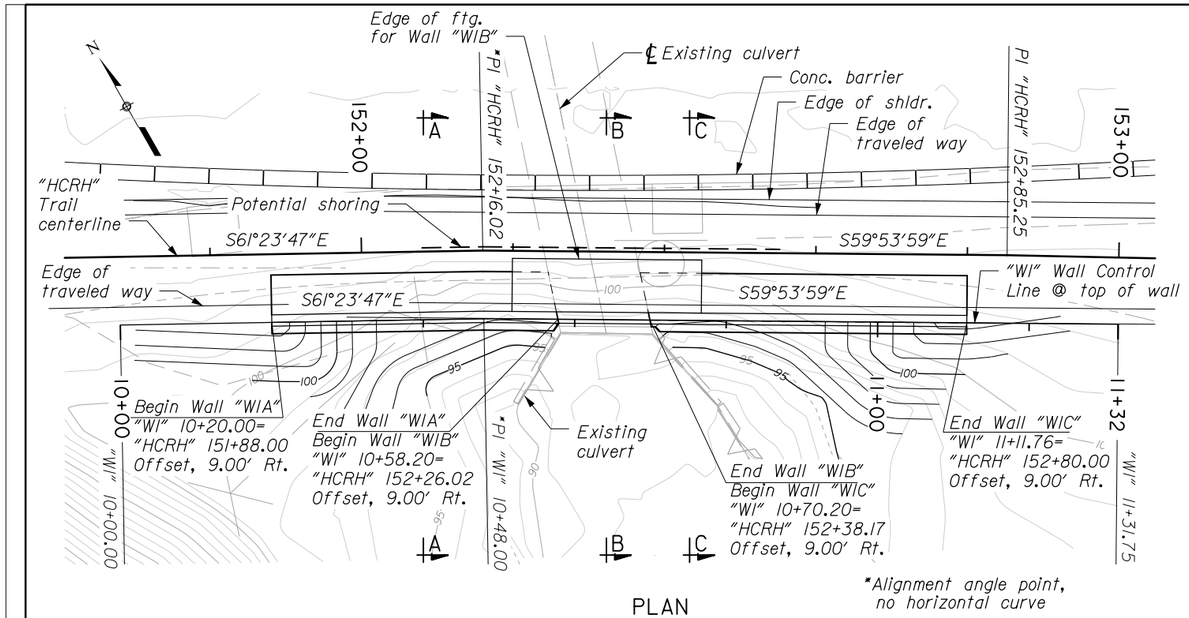

PLAN

Scale: Horiz: 1" = 20'-0"

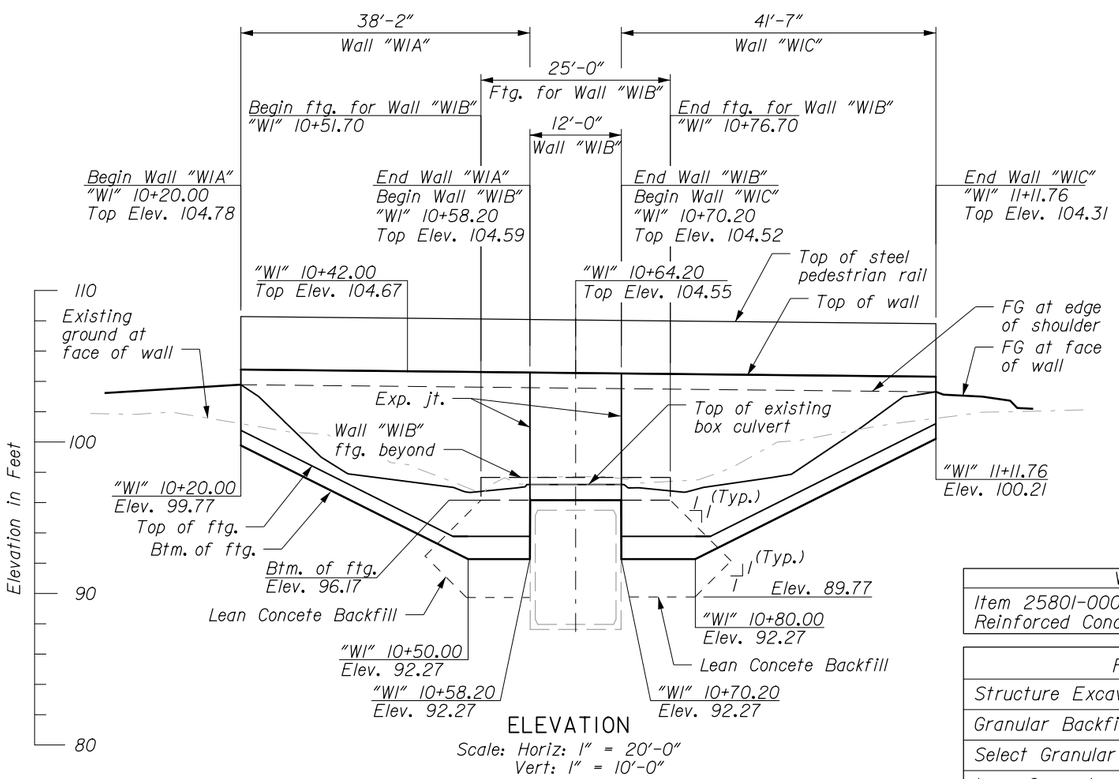

ELEVATION

Scale: Horiz: 1" = 20'-0"
Vert: 1" = 10'-0"

Note:
For Sections, see Dwg. M.2.

PRELIMINARY
NOT FOR CONSTRUCTION

GENERAL NOTES FOR WI CIP RETAINING WALLS:

SPECIFICATIONS:

Design:
AASHTO LRFD Bridge Design Specifications, 7th Edition, 2014.

Construction:
Federal Highway Administration Standard Specifications for Construction of Roads and Bridges on Federal Highway Projects, FP-14.

DESIGN LOADS:

Dead Loads:
Concrete: 150 pcf
Lateral Earth Pressure: equivalent fluid weight of soil, 36 pcf

Live Load:
Lateral Earth Pressure: uniform due to live load surcharge, 26 psf

Seismic Design:
Site-modified peak ground acceleration (PGA): 0.24g. Seismic Horizontal Acceleration Coefficient: 0.12g (1/2 of PGA).

MATERIALS:

Concrete:
All cast-in-place concrete shall be Class A(AE) with a minimum 28 day compressive strength f'c=4500 psi.
Chamfer exposed edges of cast-in-place concrete ¾" unless noted otherwise on the plans.

Reinforcing Steel:
Provide uncoated reinforcing steel according to ASTM Specification A706, or AASHTO M31 (ASTM A615) Grade 60. (Provide field bent stirrups according to ASTM Specification A706.) Use the following splice lengths (unless shown otherwise):

Reinforcing Splice Lengths (Class B) Grade 60										
Bar size	#3	#4	#5	#6	#7	#8	#9	#10	#11	#14 & #18
Uncoated	1'-0"	1'-4"	1'-8"	2'-0"	2'-6"	3'-3"	4'-1"	5'-2"	6'-4"	Not permitted

Increase all splice lengths 40% for horizontal or nearly horizontal bars so placed that more than 12" of fresh concrete is cast below the bar.
Splice reinforcing steel at alternate bars, staggered at least one splice length or as far as possible, unless shown otherwise.
Bar splices other than those shown on the plans will not be paid for.
Support the bottom mat reinforcing steel from the forms with precast mortar blocks at 24" maximum centers each way.
Support the top mat of reinforcing steel from the bottom mat of reinforcing steel with wire bar supports as shown in Chapter 3 of the CRSI Manual of Standard Practice (SBU, BBU, or CHCU). Place wire bar supports at 24" maximum centers.
Place bars 2" clear of the nearest face of concrete (unless shown otherwise).
Do not fabricate reinforcing steel for walls until final footing elevations have been determined in the field.

FOUNDATIONS:

Structural Excavation:
The contractor shall perform all the necessary excavation work to build the foundation to the required depths. Refer to the Geotechnical Report referenced below for a description of the materials anticipated to be encountered during excavation.

Spread Footing Foundation:
Footings shall be constructed to bear on undisturbed vegetated talus and/or lean concrete backfill on undisturbed vegetated talus, as indicated on design drawings.
Footing factored bearing resistance is 3,000 psf (equal to the ultimate bearing resistance times a resistance factor of 0.45).

Fill Materials:
Provide fill materials in conformance with the following Standard Specification Sections:
Granular Backfill: 703.03 (a)
Select Granular Backfill: 704.08
Lean Concrete Backfill: 614

Geotechnical Report:
For boring logs, seismic parameters, and other geotechnical information, see Geotechnical Report, Historic Columbia River Highway State Trail - Segment D, Hood River, Oregon prepared by Cornforth Consultants.

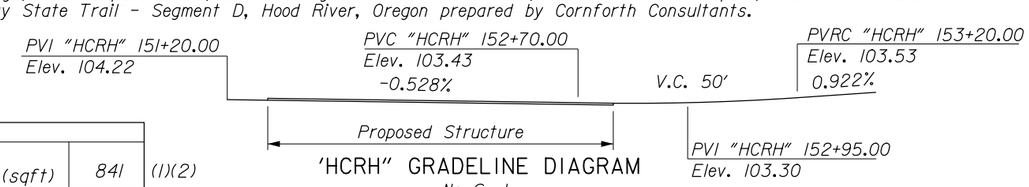

'HCRH" GRADELINE DIAGRAM
No Scale

Wall WI QUANTITIES		
Item 25801-0000 Reinforced Concrete Retaining Wall (sqft)	841	(1)(2)

For Information Only	
Structure Excavation (cuyd)	226
Granular Backfill (cuyd)	47
Select Granular Backfill (cuyd)	172
Lean Concrete Backfill (cuyd)	30
Structural Concrete Class A(AE) (cuyd)	65
Reinforcing Steel (lb)	8433

ESTIMATE NOTES:
(1) Contract Quantity
(2) Includes cost of furnishing and installing all items listed below for information only as well as all other items necessary to construct the wall as perscribed by the drawings and specifications.

U.S. DEPARTMENT OF TRANSPORTATION
FEDERAL HIGHWAY ADMINISTRATION
WESTERN FEDERAL LANDS HIGHWAY DIVISION

HISTORIC COLUMBIA RIVER HIGHWAY TRAIL

OREGON

WALL W1

PLAN AND ELEVATION

NO.	DATE	BY	REVISIONS	NO.	DATE	BY	REVISIONS	DESIGNED BY	DRAWN BY	CHECKED BY	SCALE	PROJECT TEAM LEADER	BRIDGE DRAWING	DATE	DRAWING NO.
								V PHAN	D MONK	H GUAN	1"=20'-0"	G CONNER	of	FEBRUARY 2015	M.1

...\OR100ImaF.dgn [Int.ft20] 12-Feb-2015 09:44 AM

STATE	PROJECT	SHEET NUMBER
OR	PFH 163(19)	M.2

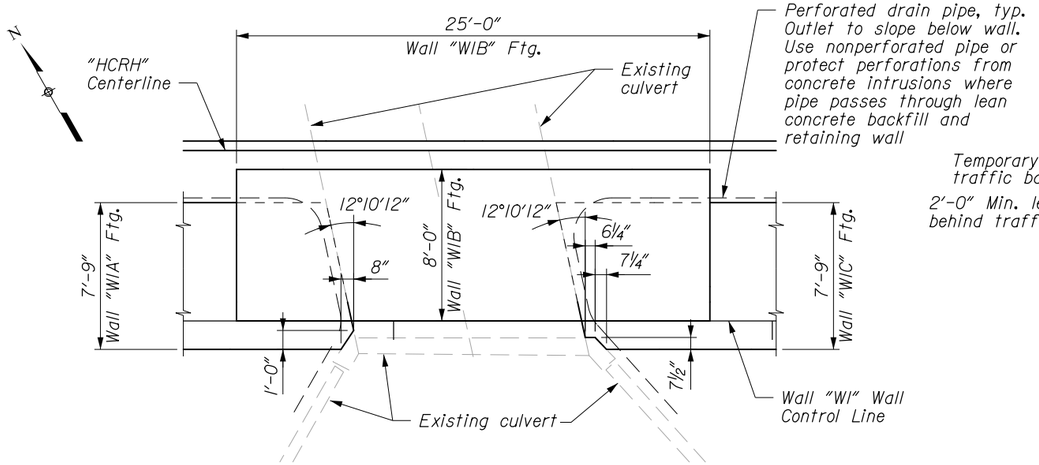

PARTIAL FOOTING PLAN
Scale: 1/8" = 1'-0"

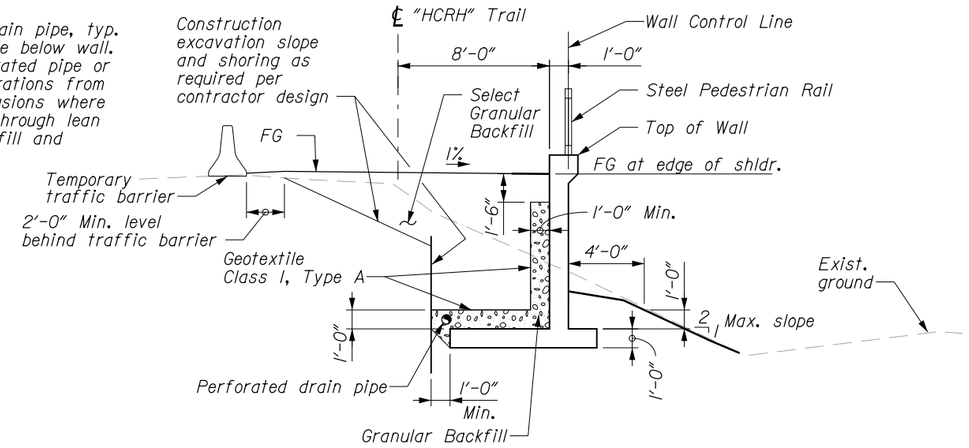

SECTION A-A
Scale: 1/8" = 1'-0"
(Shown at Sta. 10+42.00)

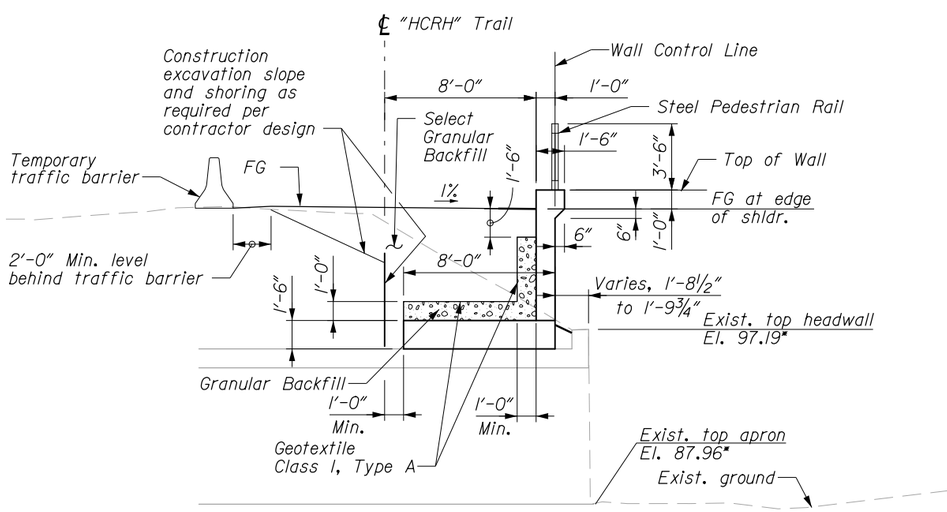

SECTION B-B
Scale: 1/8" = 1'-0"
(Shown at Sta. 10+64.00)

* For Information Only

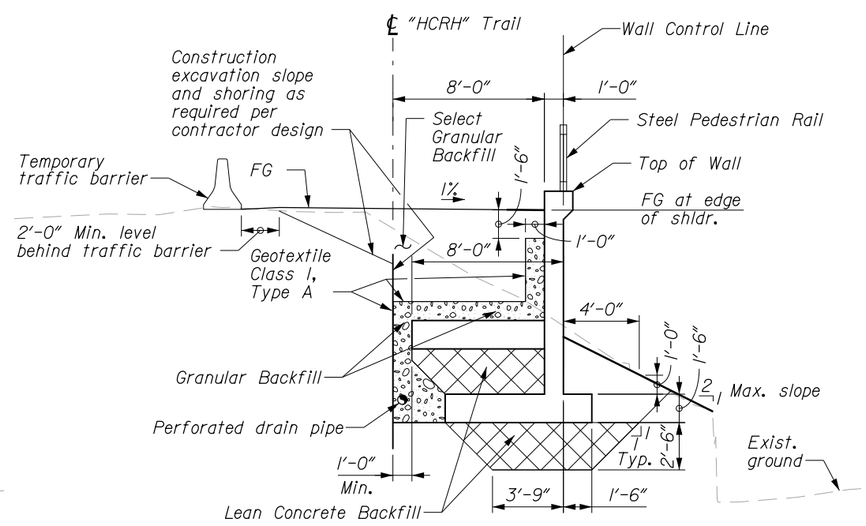

SECTION C-C
Scale: 1/8" = 1'-0"
(Shown at Sta. 10+76.00)

PRELIMINARY
NOT FOR CONSTRUCTION

U.S. DEPARTMENT OF TRANSPORTATION
FEDERAL HIGHWAY ADMINISTRATION
WESTERN FEDERAL LANDS HIGHWAY DIVISION

HISTORIC COLUMBIA RIVER HIGHWAY TRAIL

OREGON

WALL W1

WALL DETAILS 1

NO.	DATE	BY	REVISIONS	NO.	DATE	BY	REVISIONS	DESIGNED BY	DRAWN BY	CHECKED BY	SCALE	PROJECT TEAM LEADER	BRIDGE DRAWING	DATE	DRAWING NO.
								V PHAN	D MONK	H GUAN	1/8" = 1'-0"	G CONNER	of	FEBRUARY 2015	M.2

12-Feb-2015 09:45 AM

...#OR100mbF.dgn [int_ft2D]

STATE	PROJECT	SHEET NUMBER
OR	PFH 163(19)	M.3

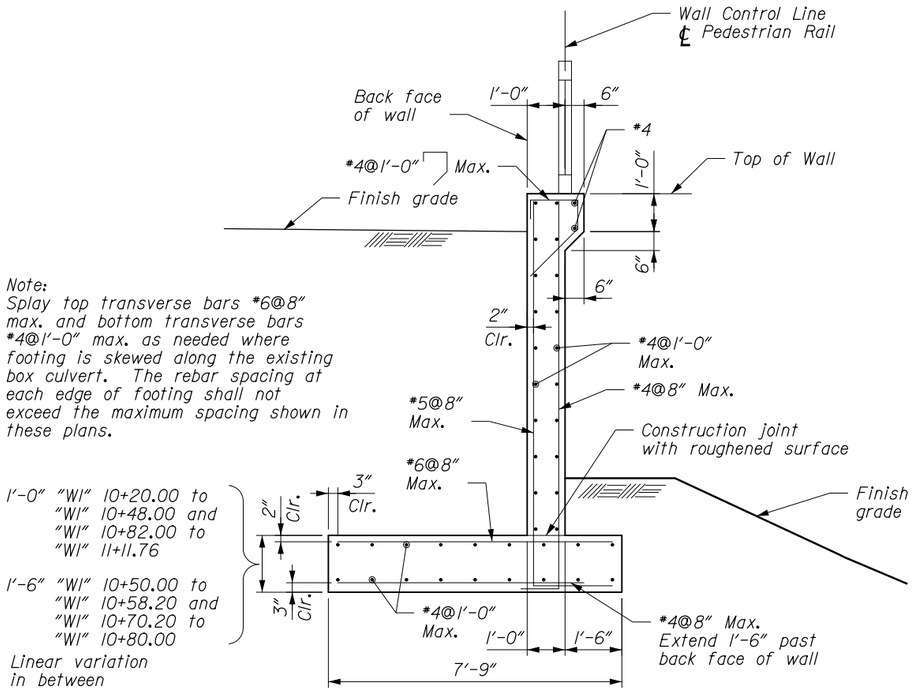

Note:
Splay top transverse bars #6@8" max. and bottom transverse bars #4@1'-0" max. as needed where footing is skewed along the existing box culvert. The rebar spacing at each edge of footing shall not exceed the maximum spacing shown in these plans.

1'-0" "WI" 10+20.00 to "WI" 10+48.00 and "WI" 10+82.00 to "WI" 11+11.76

1'-6" "WI" 10+50.00 to "WI" 10+58.20 and "WI" 10+70.20 to "WI" 10+80.00

Linear variation in between

WALL "WIA" & "WIC" TYPICAL SECTION
Scale: 1/4" = 1'-0"

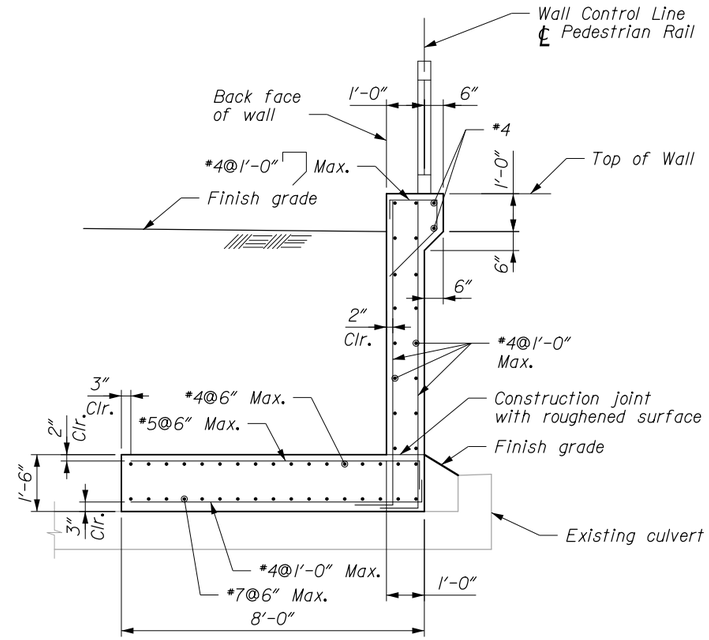

WALL "WIB" TYPICAL SECTION
Scale: 1/4" = 1'-0"
(Where Wall "WIB" is over the existing box culvert)

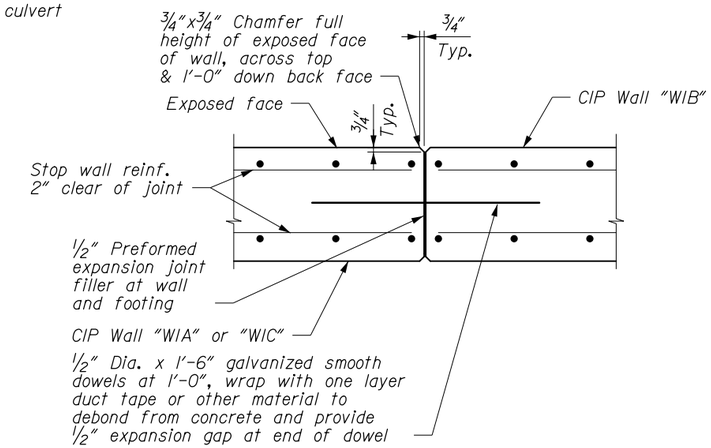

WALL "WIA" OR "WIC" JOINT SECTION AT JOINT WITH "WIB"
No Scale

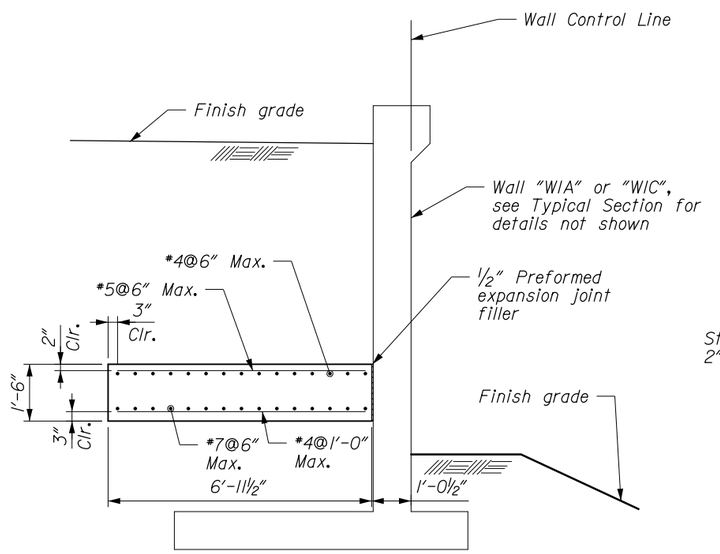

WALL "WIB" OVERLAP SECTION
Scale: 1/4" = 1'-0"
(Where Wall "WIB" overlaps with Wall "WIA" & "WIC")

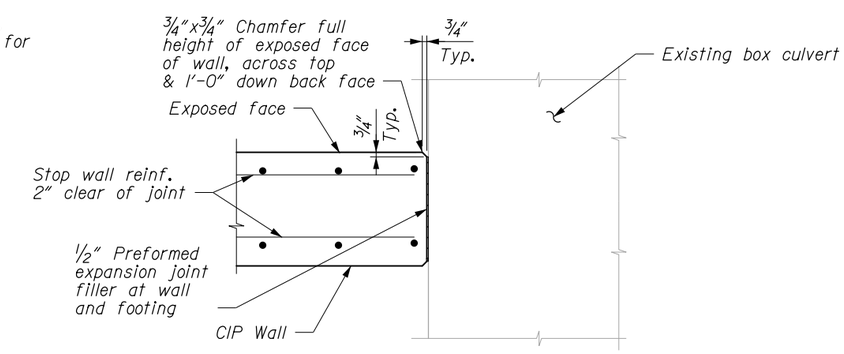

WALL "WIA" OR "WIC" JOINT SECTION AT EXISTING BOX CULVERT
No Scale

PRELIMINARY
NOT FOR CONSTRUCTION

U.S. DEPARTMENT OF TRANSPORTATION
FEDERAL HIGHWAY ADMINISTRATION
WESTERN FEDERAL LANDS HIGHWAY DIVISION

HISTORIC COLUMBIA RIVER HIGHWAY TRAIL

OREGON

WALL W1

WALL DETAILS 2

NO.	DATE	BY	REVISIONS	NO.	DATE	BY	REVISIONS	DESIGNED BY	DRAWN BY	CHECKED BY	SCALE	PROJECT TEAM LEADER	BRIDGE DRAWING	DATE	DRAWING NO.
								V PHAN	D MONK	H GUAN	AS SHOWN	G CONNER	of	FEBRUARY 2015	M.3

12-Feb-2015 09:45 AM

...#OR100lmcF.dgn [Int_ft2D]

STATE	PROJECT	SHEET NUMBER
OR	PFH 163(19)	M.4

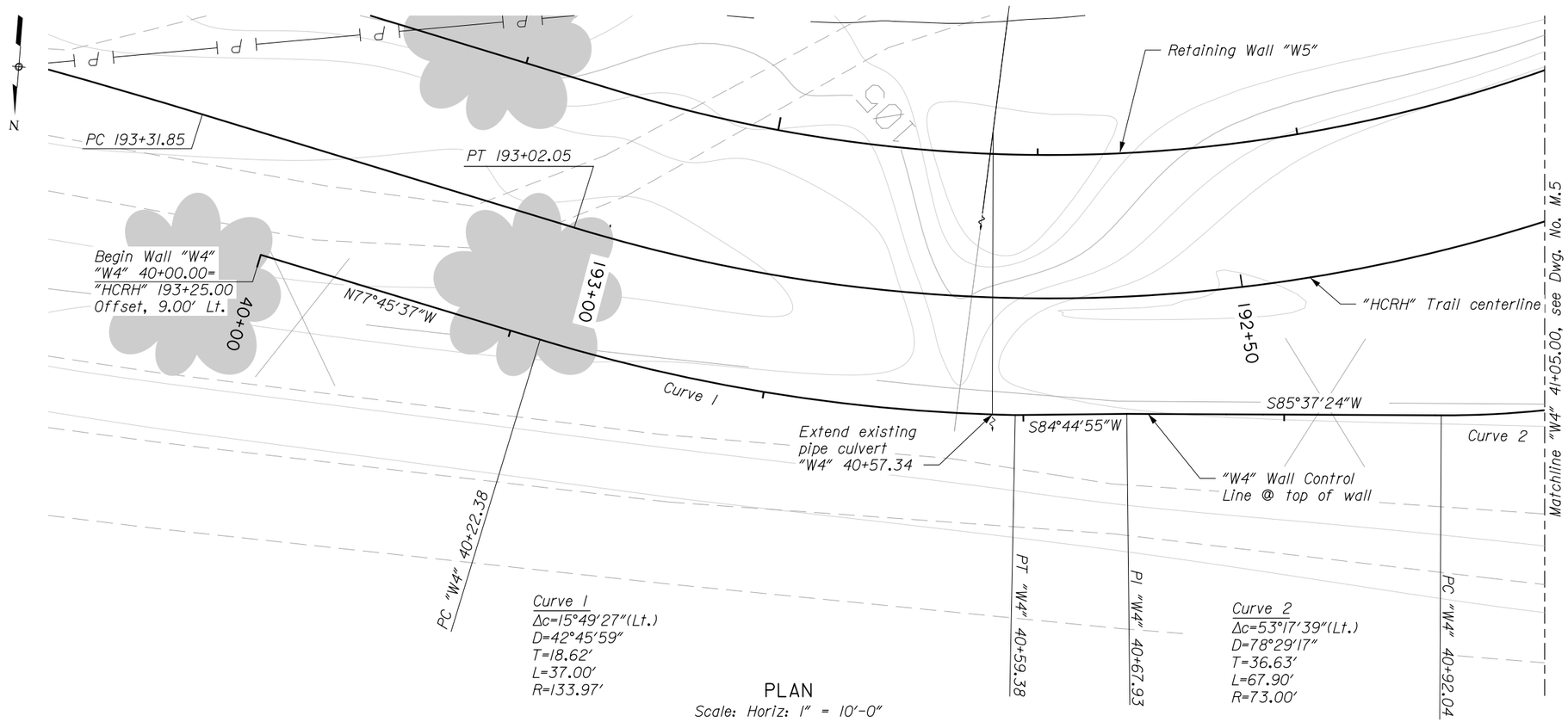

PLAN

Scale: Horiz: 1" = 10'-0"

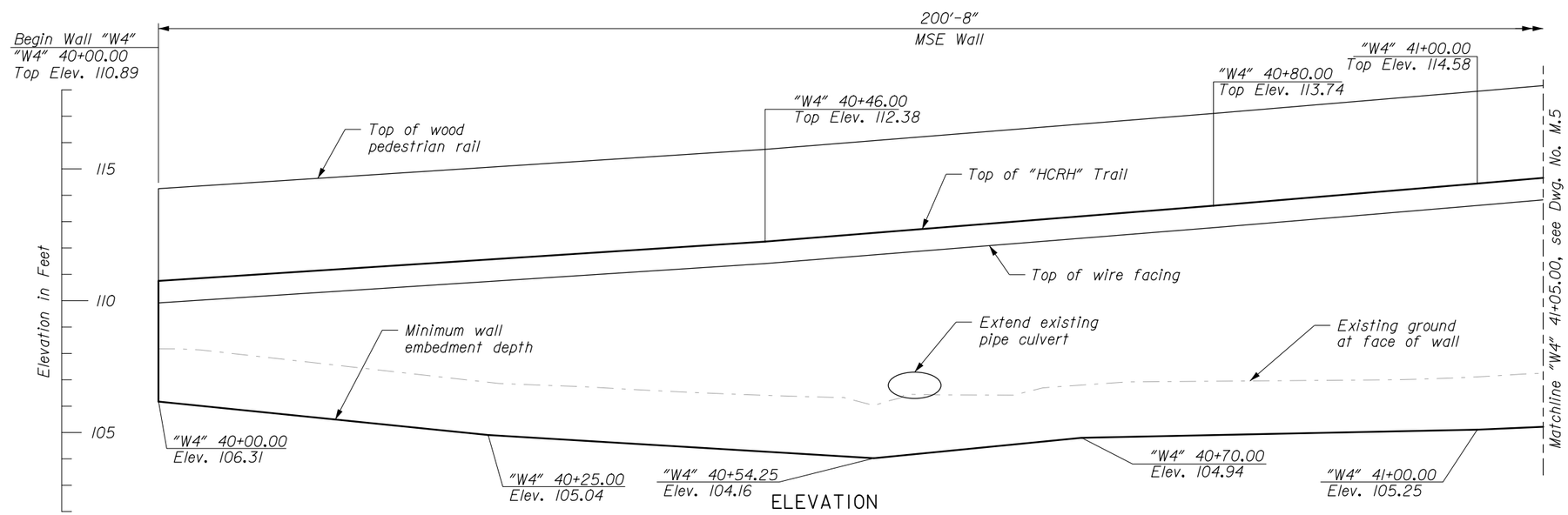

ELEVATION

Scale: Horiz: 1" = 10'-0"
Vert: 1" = 5'-0"

Notes:

1. Top of wall elevations and locations are set as shown on plans and applicable details. Bottom of wall positioning may be adjusted in order to meet top of wall criteria, minimum wall embedment criteria, and wall manufacturer's design.
2. For Typical Section, see Dwg. No. M.9.

PRELIMINARY
NOT FOR CONSTRUCTION

U.S. DEPARTMENT OF TRANSPORTATION
FEDERAL HIGHWAY ADMINISTRATION
WESTERN FEDERAL LANDS HIGHWAY DIVISION

HISTORIC COLUMBIA RIVER HIGHWAY TRAIL

OREGON

WALL W4

PLAN AND ELEVATION 1

NO.	DATE	BY	REVISIONS	NO.	DATE	BY	REVISIONS	DESIGNED BY	DRAWN BY	CHECKED BY	SCALE	PROJECT TEAM LEADER	BRIDGE DRAWING	DATE	DRAWING NO.
								B HOFFMAN	D MONK	G CONNER	1"=10'-0"	G CONNER	of	FEBRUARY 2015	M.4

...ØOR1Q01mdlF.dgn [int_ft2D] 12-Feb-2015 09:45 AM

STATE	PROJECT	SHEET NUMBER
OR	PFH 163(19)	M.5

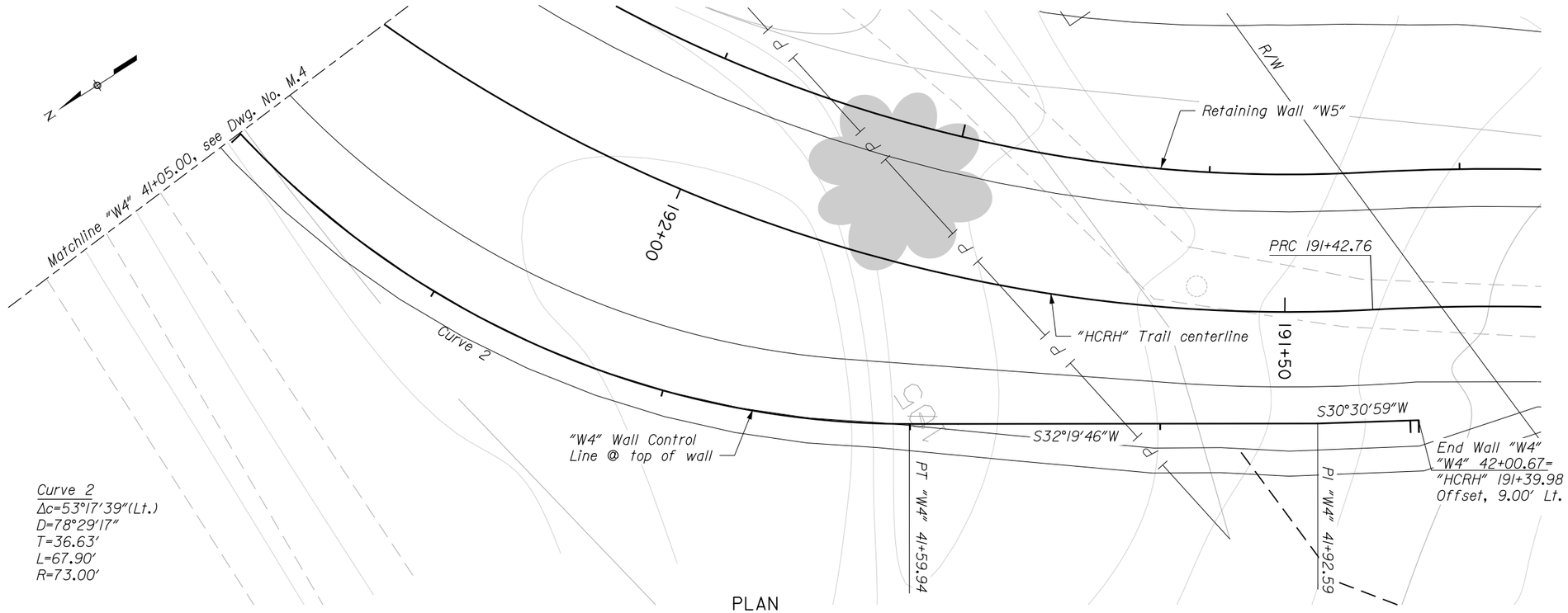

PLAN

Scale: Horiz: 1" = 10'-0"

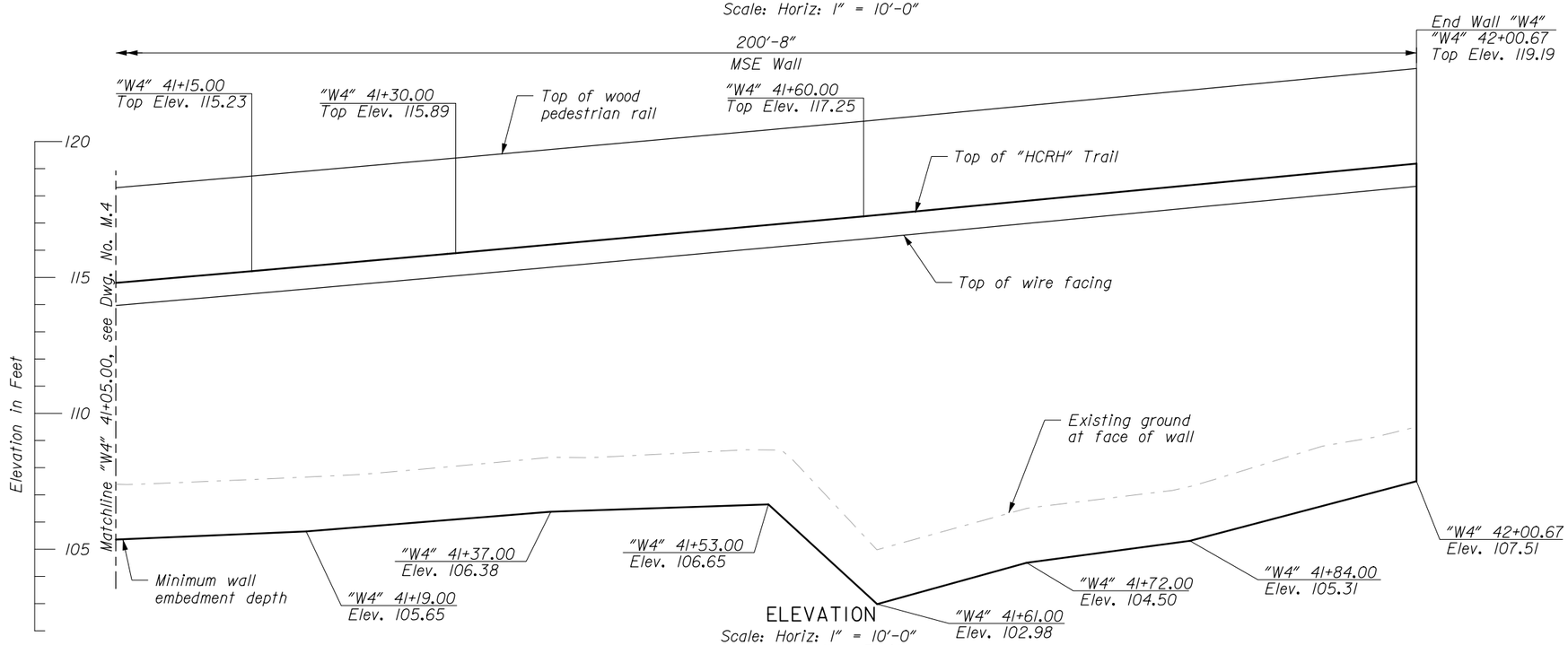

ELEVATION

Scale: Horiz: 1" = 10'-0"
Vert: 1" = 5'-0"

PRELIMINARY
NOT FOR CONSTRUCTION

U.S. DEPARTMENT OF TRANSPORTATION
FEDERAL HIGHWAY ADMINISTRATION
WESTERN FEDERAL LANDS HIGHWAY DIVISION

HISTORIC COLUMBIA RIVER HIGHWAY TRAIL

OREGON

WALL W4

PLAN AND ELEVATION 2

NO.	DATE	BY	REVISIONS	NO.	DATE	BY	REVISIONS	DESIGNED BY	DRAWN BY	CHECKED BY	SCALE	PROJECT TEAM LEADER	BRIDGE DRAWING	DATE	DRAWING NO.
								B HOFFMAN	D MONK	G CONNER	1"=10'-0"	G CONNER	of	FEBRUARY 2015	M.5

12-Feb-2015 09:45 AM

...\OR100Imd2F.dgn [Int_ft2D]

STATE	PROJECT	SHEET NUMBER
OR	PFH 163(19)	M.6

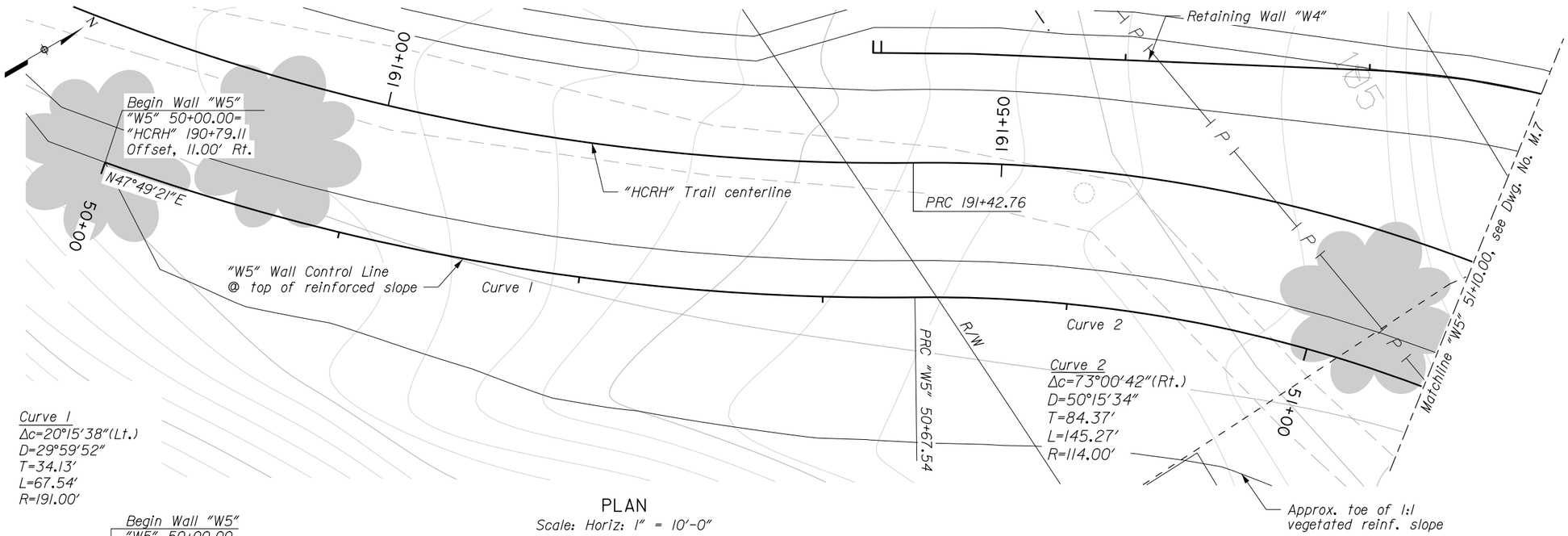

PLAN

Scale: Horiz: 1" = 10'-0"

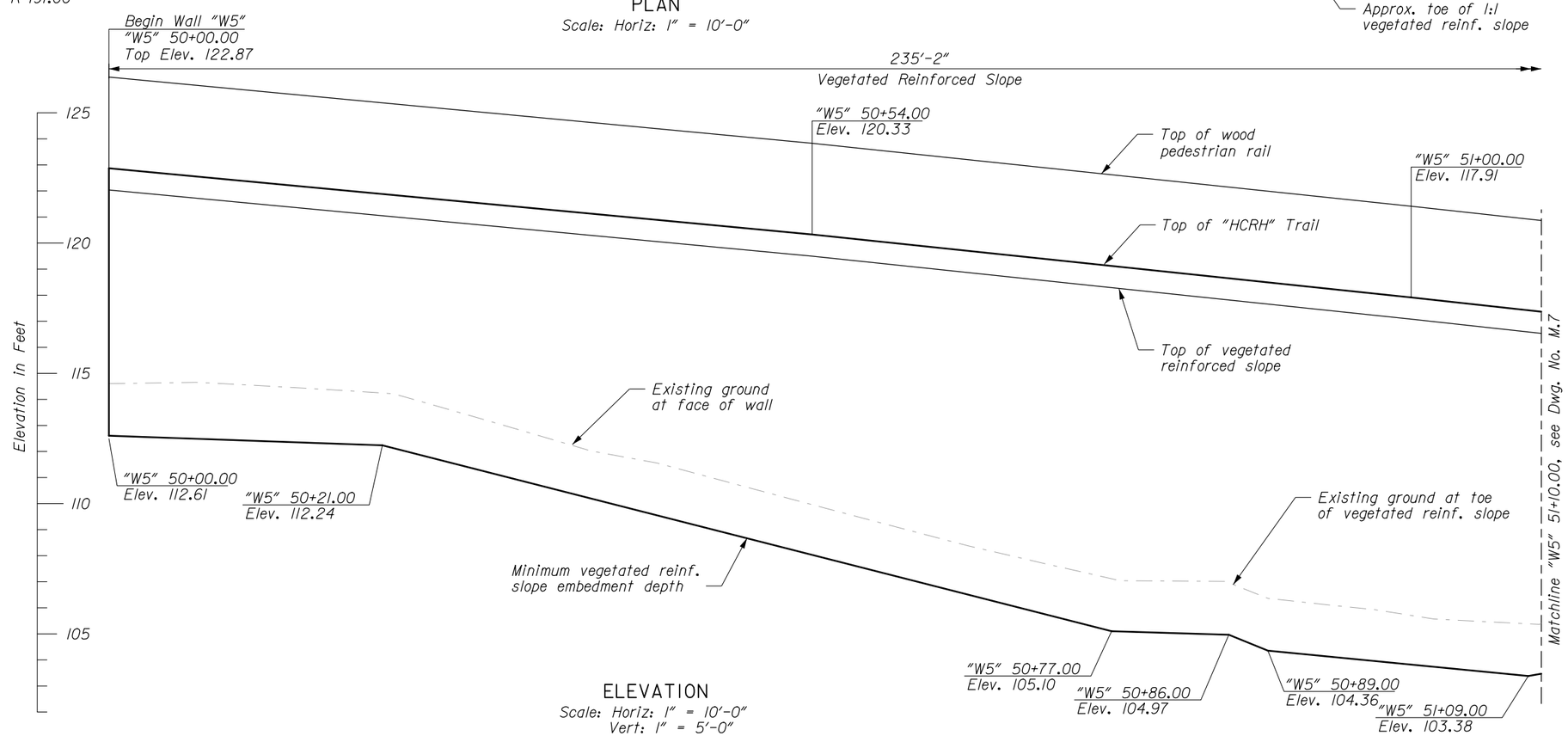

ELEVATION

Scale: Horiz: 1" = 10'-0"
Vert: 1" = 5'-0"

Notes:

1. Top of reinforced slope elevations and locations are set as shown on plans and applicable details. Bottom of wall positioning may be adjusted in order to meet top of wall criteria, minimum wall embedment criteria, and wall manufacturer's design.
2. For Typical Sections, see Dwg. No. M.9.

PRELIMINARY
NOT FOR CONSTRUCTION

U.S. DEPARTMENT OF TRANSPORTATION
FEDERAL HIGHWAY ADMINISTRATION
WESTERN FEDERAL LANDS HIGHWAY DIVISION

HISTORIC COLUMBIA RIVER HIGHWAY TRAIL

OREGON

WALL W5

PLAN AND ELEVATION 1

NO.	DATE	BY	REVISIONS	NO.	DATE	BY	REVISIONS	DESIGNED BY	DRAWN BY	CHECKED BY	SCALE	PROJECT TEAM LEADER	BRIDGE DRAWING	DATE	DRAWING NO.
								B HOFFMAN	D MONK	G CONNER	1"=10'-0"	G CONNER	of	FEBRUARY 2015	M.6

12-Feb-2015 09:45 AM

...\OR10010meIF.dgn [int_ft2D]

STATE	PROJECT	SHEET NUMBER
OR	PFH 163(19)	M.7

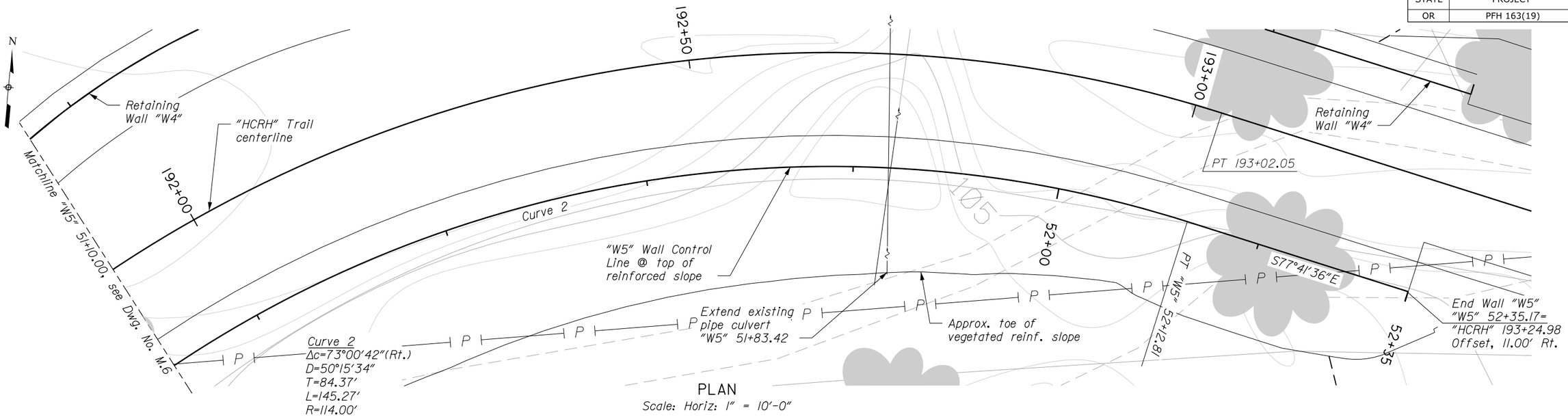

PLAN

Scale: Horiz: 1" = 10'-0"

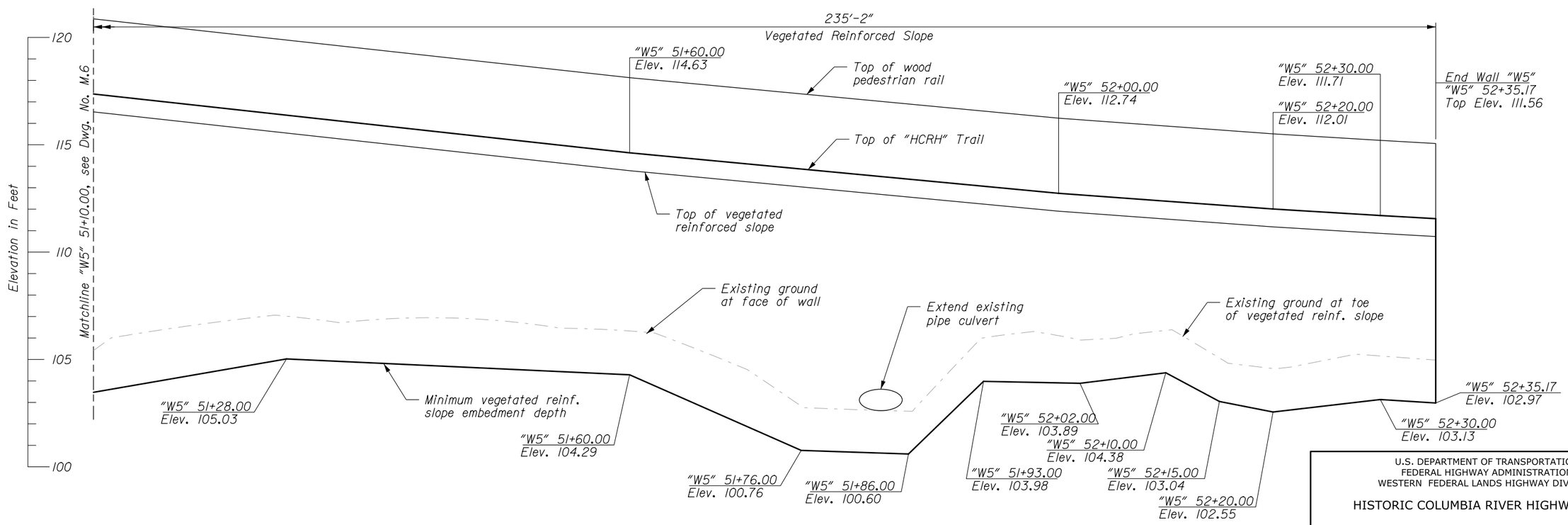

ELEVATION

Scale: Horiz: 1" = 10'-0"
Vert: 1" = 5'-0"

PRELIMINARY
NOT FOR CONSTRUCTION

U.S. DEPARTMENT OF TRANSPORTATION
FEDERAL HIGHWAY ADMINISTRATION
WESTERN FEDERAL LANDS HIGHWAY DIVISION

HISTORIC COLUMBIA RIVER HIGHWAY TRAIL

OREGON

WALL W5

PLAN AND ELEVATION 2

NO.	DATE	BY	REVISIONS	NO.	DATE	BY	REVISIONS	DESIGNED BY	DRAWN BY	CHECKED BY	SCALE	PROJECT TEAM LEADER	BRIDGE DRAWING	DATE	DRAWING NO.
								B HOFFMAN	D MONK	G CONNER	1"=10'-0"	G CONNER	of	FEBRUARY 2015	M.7

12-Feb-2015 09:45 AM

...\OR100lme2F.dgn (Int_ft20)

STATE	PROJECT	SHEET NUMBER
OR	PFH 163(19)	M.8

GENERAL NOTES FOR MSE RETAINING WALLS AND REINFORCED SLOPES:

SPECIFICATIONS:

Design:

MSE Wall and Reinforced Slope vendor shall perform all internal and external design for walls and slopes. The design drawings and calculations shall be signed and sealed by a professional Geotechnical Engineer licensed by the State of Oregon.
Design for MSE Walls and Reinforced Slopes shall conform to the requirements for FHWA GEC 011, Design and Construction of Mechanically Stabilized Earth Walls and Reinforced Soil Slopes 2009.
Provide a minimum service life of 75 years for all components.
Refer to the Geotechnical Report referenced below for additional design recommendations.

Construction:

Federal Highway Administration Standard Specifications for Construction of Roads and Bridges on Federal Highway Projects, FP-14.

DESIGN LOADS:

MSE Walls and Reinforced Slopes to be designed using loads shown in Load Diagram.

MATERIALS:

Soil Properties:

Material Description	Moist Unit Weight (pcf)	Angle Of Internal Friction (Degrees)	Cohesion Intercept (psf)	Active Earth Pressure Coefficient, Ka
Select Granular Backfill	130	34	0	0.26
Foundation Soils	130	34	0	0.26

FOUNDATIONS:

Excavation:

The contractor shall perform all the necessary excavation work to build the foundation to the required depths. Refer to the Geotechnical Report referenced below for a description of the materials anticipated to be encountered during excavation of the bridge site.

Fill Materials:

Provide fill materials in conformance with the following Standard Specification Sections:
Granular Backfill: 703.03 (a)
Select Granular Backfill: 704.08

Wall W4 QUANTITIES		
Item 25501-0000 Mechnically Stabilized Earth Wall (sqft)	1729	(1)(2)

Wall W5 QUANTITIES		
Item 26101-0000 Reinforced Soil Slope (sqft)	2480	(1)(2)

For Information Only	
Structure Excavation (cuyd)	361
Granular Backfill (cuyd)	89
Select Granular Backfill (cuyd)	553

For Information Only	
Structure Excavation (cuyd)	695
Granular Backfill (cuyd)	184
Select Granular Backfill (cuyd)	1540

ESTIMATE NOTES:

(1) Contract Quantity

(2) Includes cost of furnishing and installing all items listed below for information only as well as all other items necessary to construct the wall as perscribed by the drawings and specifications.

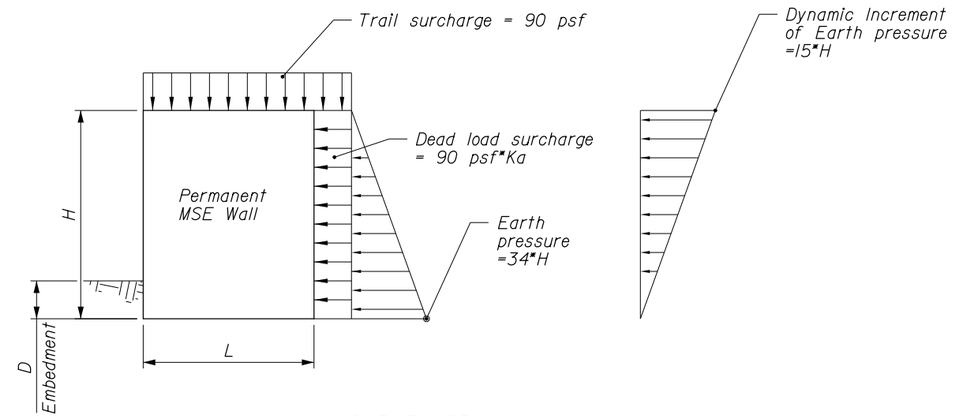

LOAD DIAGRAM
No Scale

PRELIMINARY
NOT FOR CONSTRUCTION

U.S. DEPARTMENT OF TRANSPORTATION
FEDERAL HIGHWAY ADMINISTRATION
WESTERN FEDERAL LANDS HIGHWAY DIVISION

HISTORIC COLUMBIA RIVER HIGHWAY TRAIL

OREGON

WALLS W4 & W5

GENERAL NOTES

NO.	DATE	BY	REVISIONS	NO.	DATE	BY	REVISIONS	DESIGNED BY	DRAWN BY	CHECKED BY	SCALE	PROJECT TEAM LEADER	BRIDGE DRAWING	DATE	DRAWING NO.
								B HOFFMAN	D MONK	G CONNER	NO SCALE	G CONNER	of	FEBRUARY 2015	M.8

...#OR100lmf.dgn [Int_f120] 12-Feb-2015 09:45 AM

STATE	PROJECT	SHEET NUMBER
OR	PFH 163(19)	M.9

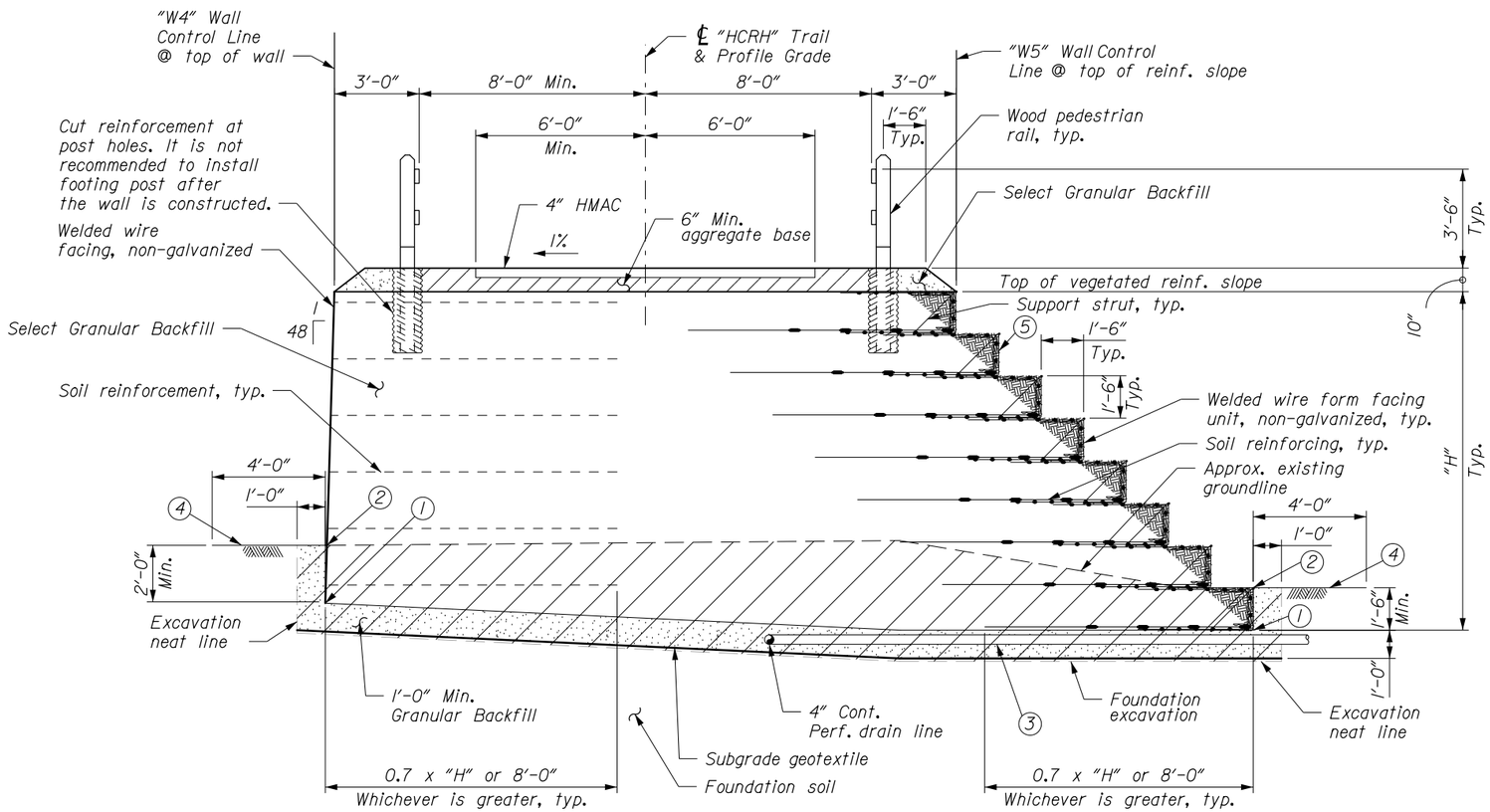

TYPICAL SECTION - WALL "W4" & "W5"

Scale: 3/16" = 1'-0"

1. Bottom of wall.
2. Finish grade at bottom of wall.
3. 4" Drain line longitudinal along full length of wall. Lateral discharge at 100% spa. max. with 0.5% min. slope. Discharge to day-light at toe of slope. May require 90-degree bend in discharge line in front of wall and discharge line extending parallel to wall alignment in order to discharge to daylight.
4. Minimum 4'-0" horizontal bench in front of wall.
5. See Welded Wire Form Facing Detail, Dwg. M.11.

PRELIMINARY
NOT FOR CONSTRUCTION

U.S. DEPARTMENT OF TRANSPORTATION
FEDERAL HIGHWAY ADMINISTRATION
WESTERN FEDERAL LANDS HIGHWAY DIVISION

HISTORIC COLUMBIA RIVER HIGHWAY TRAIL

OREGON

WALLS W4 & W5

WALL DETAILS 1

NO.	DATE	BY	REVISIONS	NO.	DATE	BY	REVISIONS	DESIGNED BY	DRAWN BY	CHECKED BY	SCALE	PROJECT TEAM LEADER	BRIDGE DRAWING	DATE	DRAWING NO.
								B HOFFMAN	T CHANCELLOR	G CONNER	3/16" = 1'-0"	G CONNER	of	FEBRUARY 2015	M.9

...\OR100ImgF.dgn [Int_f120] 12-Feb-2015 09:45 AM

STATE	PROJECT	SHEET NUMBER
OR	PFH 163(19)	M.10

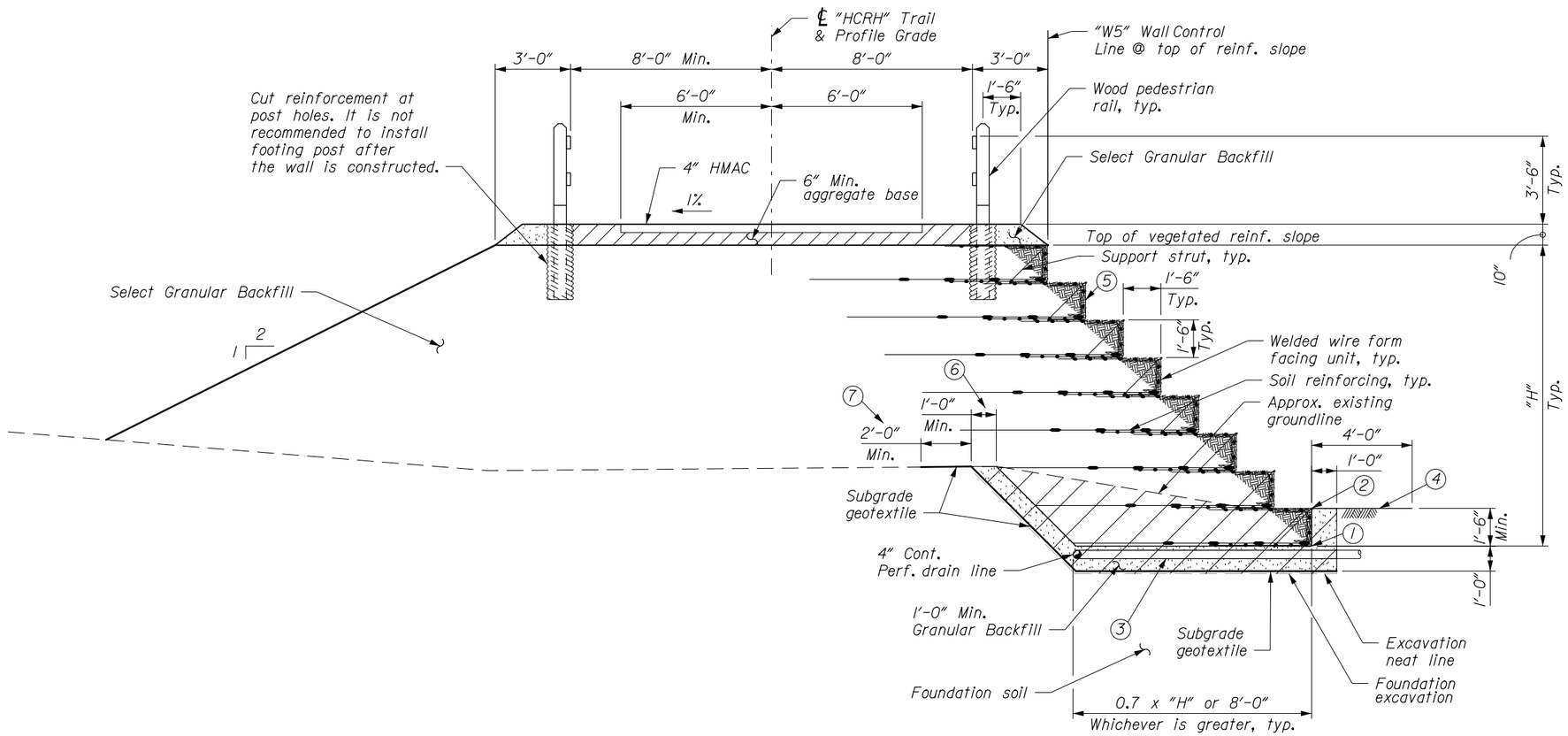

TYPICAL SECTION - WALL "W5"
"W5" 50+00.00 TO "W5" 50+63.98
Scale: 3/16" = 1'-0"

1. Bottom of wall.
2. Finish grade at bottom of wall.
3. 4" Drain line longitudinal along full length of wall. Lateral discharge at 100% spa. max. with 0.5% min. slope. Discharge to day-light at toe of slope. May require 90-degree bend in discharge line in front of wall and discharge line extending parallel to wall alignment in order to discharge to daylight.
4. Minimum 4'-0" horizontal bench in front of wall.
5. See Welded Wire Form Facing Detail, Dwg. M.11.
6. Excavation neat line minimum 1'-0" beyond soil reinforcing.
7. Subgrade geotextile to extend minimum 2'-0" beyond excavation required for wall.

PRELIMINARY
NOT FOR CONSTRUCTION

U.S. DEPARTMENT OF TRANSPORTATION
FEDERAL HIGHWAY ADMINISTRATION
WESTERN FEDERAL LANDS HIGHWAY DIVISION

HISTORIC COLUMBIA RIVER HIGHWAY TRAIL

OREGON

WALL W5

WALL DETAILS 2

NO.	DATE	BY	REVISIONS	NO.	DATE	BY	REVISIONS	DESIGNED BY	DRAWN BY	CHECKED BY	SCALE	PROJECT TEAM LEADER	BRIDGE DRAWING	DATE	DRAWING NO.
								B HOFFMAN	D MONK	G CONNER	3/16" = 1'-0"	G CONNER	of	FEBRUARY 2015	M.10

...#OR100ImhF.dgn [Int_ft2D] 12-Feb-2015 09:45 AM

STATE	PROJECT	SHEET NUMBER
OR	PFH 163(19)	M.11

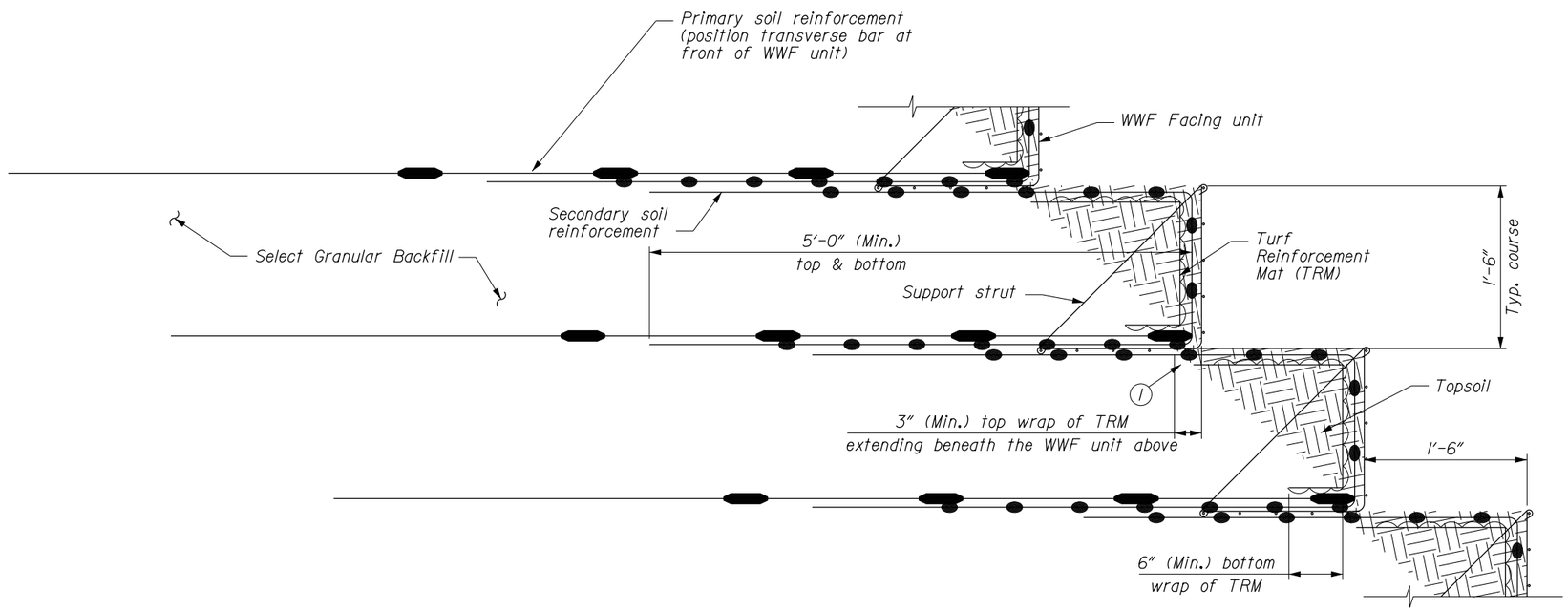

WELDED WIRE FORM FACING DETAIL (PLANTABLE FACE FILL)

Scale: 3/4" = 1'-0"

1 Maximum limit of topsoil shall not extend more than 3" under successive facing unit. Minimum limit of topsoil extend to edge of successive facing unit.

PRELIMINARY
NOT FOR CONSTRUCTION

U.S. DEPARTMENT OF TRANSPORTATION
FEDERAL HIGHWAY ADMINISTRATION
WESTERN FEDERAL LANDS HIGHWAY DIVISION

HISTORIC COLUMBIA RIVER HIGHWAY TRAIL

OREGON

WALLS W4 & W5

WALL DETAILS 3

NO.	DATE	BY	REVISIONS	NO.	DATE	BY	REVISIONS	DESIGNED BY	DRAWN BY	CHECKED BY	SCALE	PROJECT TEAM LEADER	BRIDGE DRAWING	DATE	DRAWING NO.
								B HOFFMAN	D MONK	G CONNER	3/4" = 1'-0"	G CONNER	of	FEBRUARY 2015	M.11

12-Feb-2015 09:46 AM

...\OR100\mif.dgn [int_ft2D]