LANDSCAPE ARCHITECTURAL
PLANS FOR PROPOSED PROJECT
OR DOT CRGNSA 100(1)

HISTORIC COLUMBIA RIVER HIGHWAY STATE TRAIL

HOOD RIVER COUNTY
OREGON

June 24, 2014
DRAFT - NOT FOR CONSTRUCTION

SHEET INDEX

L0.00	*Symbols Legend*
L0.01	*Planting Legend*
L0.02	*Planting Legend*
L1.01	*Details - Railing Type A*
L1.02	*Details - Railing Type B & B1*
L1.03	*Details - Railing Type B & B1*
L1.04	*Details - Railing Type C*
L1.05	*Details - Railing Type D*
L1.06	*Details - Railing Type F*
L1.07	*Details - Basalt Curb*
L1.08	*Details - Bike Rail*
L1.09	*Details - Warren Creek Bridge Balustrade*
L1.10	*Details - Warren Creek Bridge Elevation*
L1.11	*Details - Warren Creek Bridge Perspective*
L1.12	*Details - Hole-in-the-Wall Falls Section*
L2.01	*Landscape Plan STA 152+00 - 155+00*
L2.02	*Landscape Plan STA 161+73 - 169+15*
L2.03	*Landscape Plan STA 169+15 - 175+50*
L2.04	*Landscape Plan STA 185+25 - 185+50*
L2.05	*Landscape Plan STA 185+50 - 193+50*
L2.06	*Landscape Plan STA 193+50 - 198+00*
L2.07	*Landscape Plan STA 198+00 - 207+23*
L2.08	*Landscape Plan STA 207+23 - 216+00*
L2.09	*Landscape Plan STA 216+00 - 219+75*
L3.01	*Enlargement - Wonder Creek Waterfall Area*
L3.02	*Enlargement - Auxiliary Trail & Picnic Area Hole-in-the-Wall Falls*
L3.03	*Enlargement - Mt. Defiance Trailhead*
L3.04	*Enlargement - Parking Lot/Trail Information*

plotted 6/24/2014 5:24 PM by Aaron Maples

SYMBOLS

×	*Probable tree removal - field verify with responsible Agency Forester*
△	*Protect Tree: Limit extent of fill and construction disturbance to minimize impact to existing tree.*

Abbreviations & Symbols Legend

plotted 6/24/2014 5:24 PM by Aaron Maples
Designed by: --/---
Checked by: --/---

TREE SCHEDULE

SYM	KEY	BOTANICAL NAME	COMMON NAME	SIZE	COMMENTS
		TREES			
		Acer circinatum	Vine Maple	1" cal.	
		Fraxinus latifolia	Oregon Ash	1" cal.	
		Thuja plicata	Western Red Cedar	4 ft.	
		Pseudotsuga menziesii	Douglas Fir	1" cal.	

PLANT COMMUNITY A

SYM	KEY	BOTANICAL NAME	COMMON NAME	SIZE	COMMENTS
		SHRUBS			
		Gaultheria shallon	Salal	#1	Evergreen; produce dense shade
		Lonicera involucrata	Twinberry	#1	Fast growing; produce shade
		Mahonia aquafolium	Oregon Grape	#1	
		Mahonia repens	Creeping Mahonia	#1	
		Ribes sanguineum	Red Flowering Currant	#2	
		Rosa nutkana	Nootka Rose	#1	Fast growing; produce thicket
		Rosa woodsii	Woods Rose	#1	Fast growing; produce thicket; erosion control
		Rubus parviflorus	Thimbleberry	#1	Aggressive; erosion control
		Vaccinium ovatum	Evergreen Huckleberry	#2	
		Festuca occidentalis	Western Fescue	#1	
		Physocarpus capitatus	Pacific ninebark	#2	
		Symphoricarpos albus	Common snowberry	#2	
		Polystichum munitum	Western Sword Fern	#1	
		Holodiscus discolor	Ocean Spray	#1	
		Sambucus cerulea	Blue Elderberry	#2	
		Corylus cornuta	Beaked Hazel	#1	
		Rubus spectabilis	Salmonberry	#1	

Plant Community Type A (Existing Grade)

Plant Community Type B (Fill Slope)

Plant Community Type C (Cut Slope)

Noxious Weed Removal

Includes:
Blackberry
Vinca
Ivy
Scotch Broom

Planting Legend

plotted 6/24/2014 5:24 PM by Aaron Maples
Designed by:
Checked by:

DRAFT	STATE	PROJECT	SHEET NUMBER
	OR	DOT CRGNSA 100(1)	L0.02

PLANT COMMUNITY B

SYM	KEY	BOTANICAL NAME	COMMON NAME	SIZE	COMMENTS
		SHRUBS			
		Gaultheria shallon	Salal	#1	Evergreen; produce dense shade
		Mahonia aquafolium	Oregon Grape	#1	
		Mahonia repens	Creeping Mahonia	#1	
		Polystichum munitum	Western Sword Fern	#1	Evergreen; produce shade
		Symphocarpus albus	Snowberry	#1	Erosion control
		Vaccinium ovatum	Evergreen Huckleberry	#2	

Plant Community Type A (Existing Grade)

Plant Community Type B (Fill Slope)

PLANT COMMUNITY C

SYM	KEY	BOTANICAL NAME	COMMON NAME	SIZE	COMMENTS
		SHRUBS			
		Cornus sericea ssp. sericea	Red Twig Dogwood	#1	Fast growing; produce shade
		Salix scouleriana	Scouler's willow	#2	Fast growing; erosion control
		Spiraea betulifolia 'Lucida'	Shiny Leaf Spiraea	#1	
		Spiraea douglasii	Douglas Spiraea	#1	Fast growing; aggressive; erosion control
		Carex obnupta	Slough Sedge	#4 pot	
		Deschampsia elongata	Slender Hairgrass		
		Juncus patens	Spreading Rush	4" pot	
		Deschampsia caespitosa	Tufted Hairgrass		

Plant Community Type C (Cut Slope)

Noxious Weed Removal

Includes:
Blackberry
Vinca
Ivy
Scotch Broom

Planting Legend

Checked by:

Designed by:

plotted 6/24/2014 5:25 PM by Aaron Maples

DRAFT	STATE	PROJECT	SHEET NUMBER
	OR	DOT CRGNSA 100(1)	L1.01

NOTES:

1. All members shall be exterior grade pressure treated and painted white.
2. The top member of this railing may be raised to 48" depending on final design.

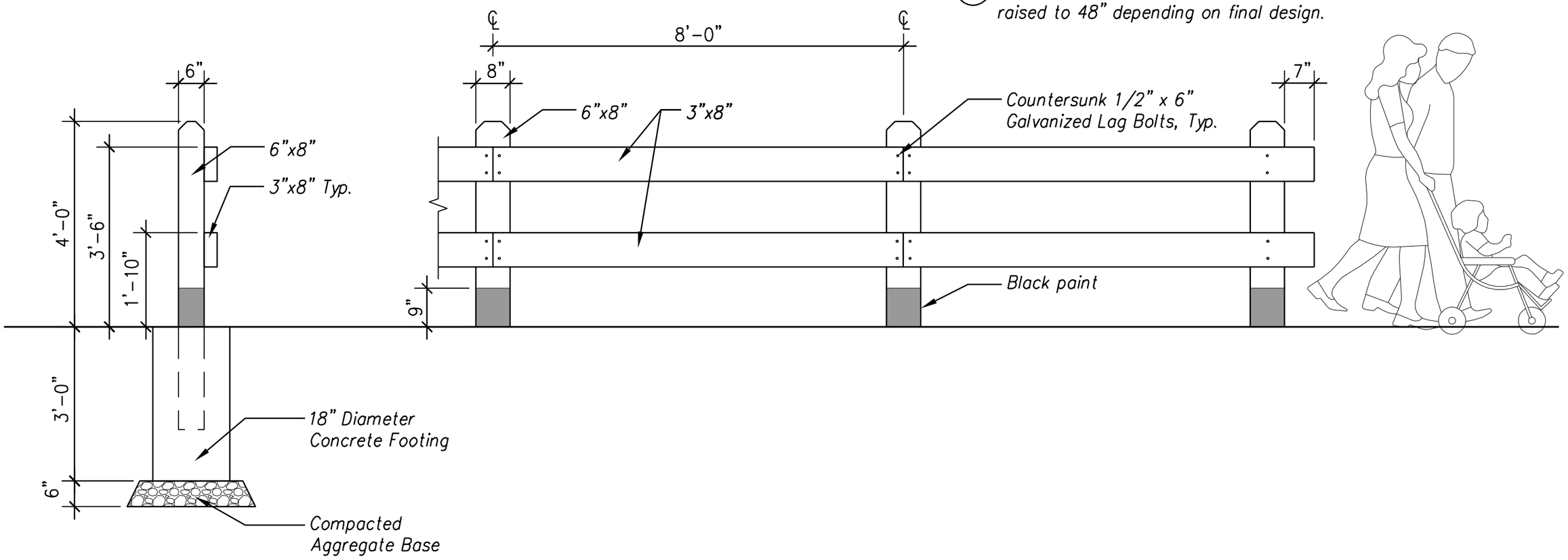

RAILING TYPE A - 42" WOOD
SCALE: 1/2" = 1'-0"

Details

Railing Type A

plotted 6/24/2014 5:25 PM by Aaron Maples

Designed by: --/---

Checked by: --/---

DRAFT	STATE	PROJECT	SHEET NUMBER
	OR	DOT CRGNSA 100(1)	L1.02

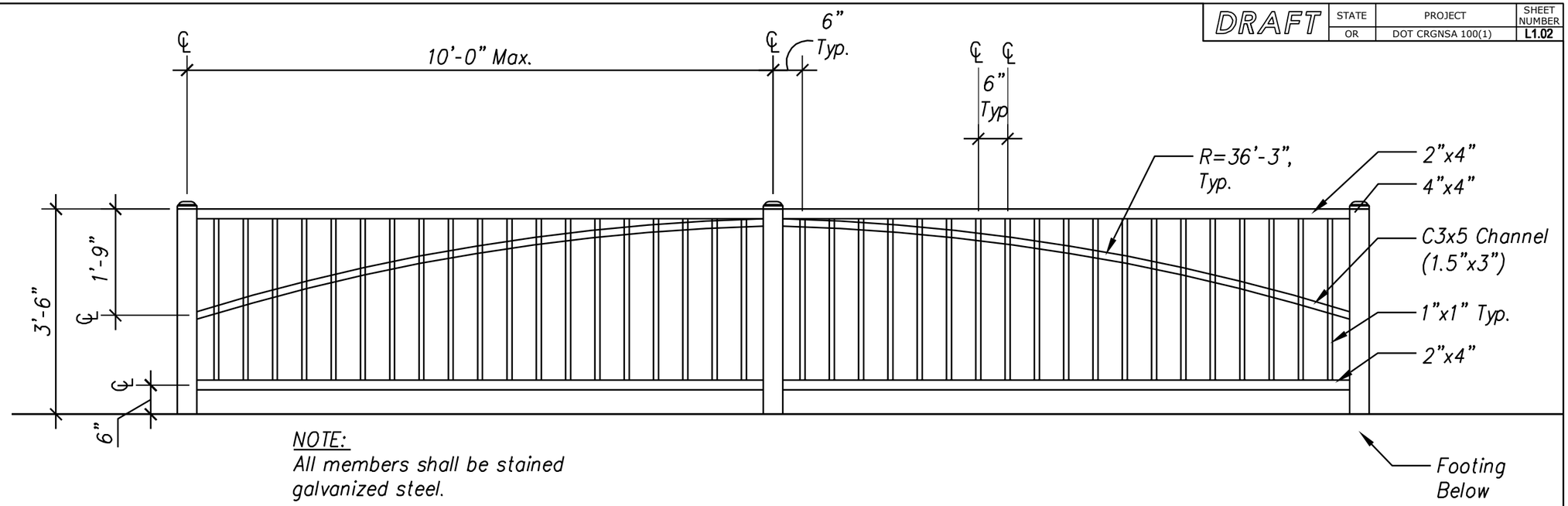

NOTE:
All members shall be stained galvanized steel.

RAILING TYPE B1 - 42" STAINED STEEL WITH ARCH
SCALE: 1/2" = 1'-0"

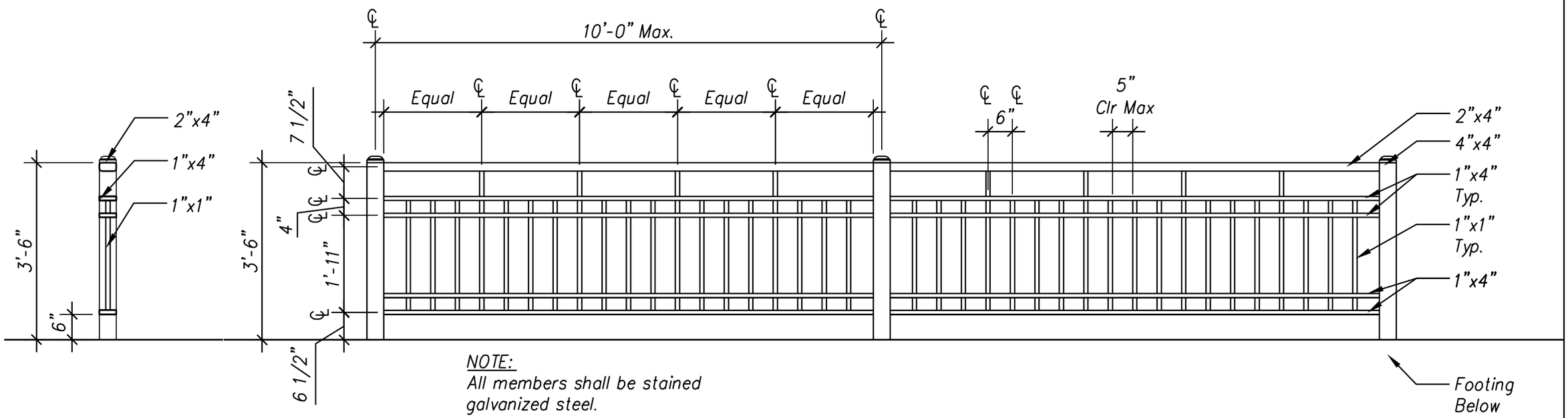

NOTE:
All members shall be stained galvanized steel.

RAILING TYPE B - 42" STAINED STEEL
SCALE: 1/2" = 1'-0"

Details

Railing Type B & B1

Checked by:

Designed by:

plotted 6/24/2014 5:25 PM by Aaron Maples

DRAFT	STATE	PROJECT	SHEET NUMBER
	OR	DOT CRGNSA 100(1)	L1.03

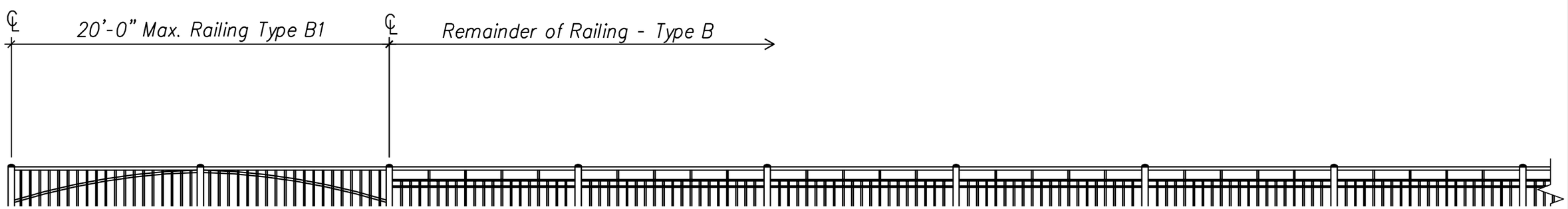

RAILING TYPE B1 and B Transition
SCALE: 3/16" = 1'-0"

Details

Railing Type B & B1

Designed by: --/---
Checked by: --/---
plotted 6/24/2014 5:25 PM by Aaron Maples

DRAFT	STATE	PROJECT	SHEET NUMBER
	OR	DOT CRGNSA 100(1)	L1.04

NOTES:
1. Stone pattern shall be squares and rectangles as shown. Stone sizes shall be 12" min. to 36" max. in any one direction.
2. The final height may be 48" depending on final design.

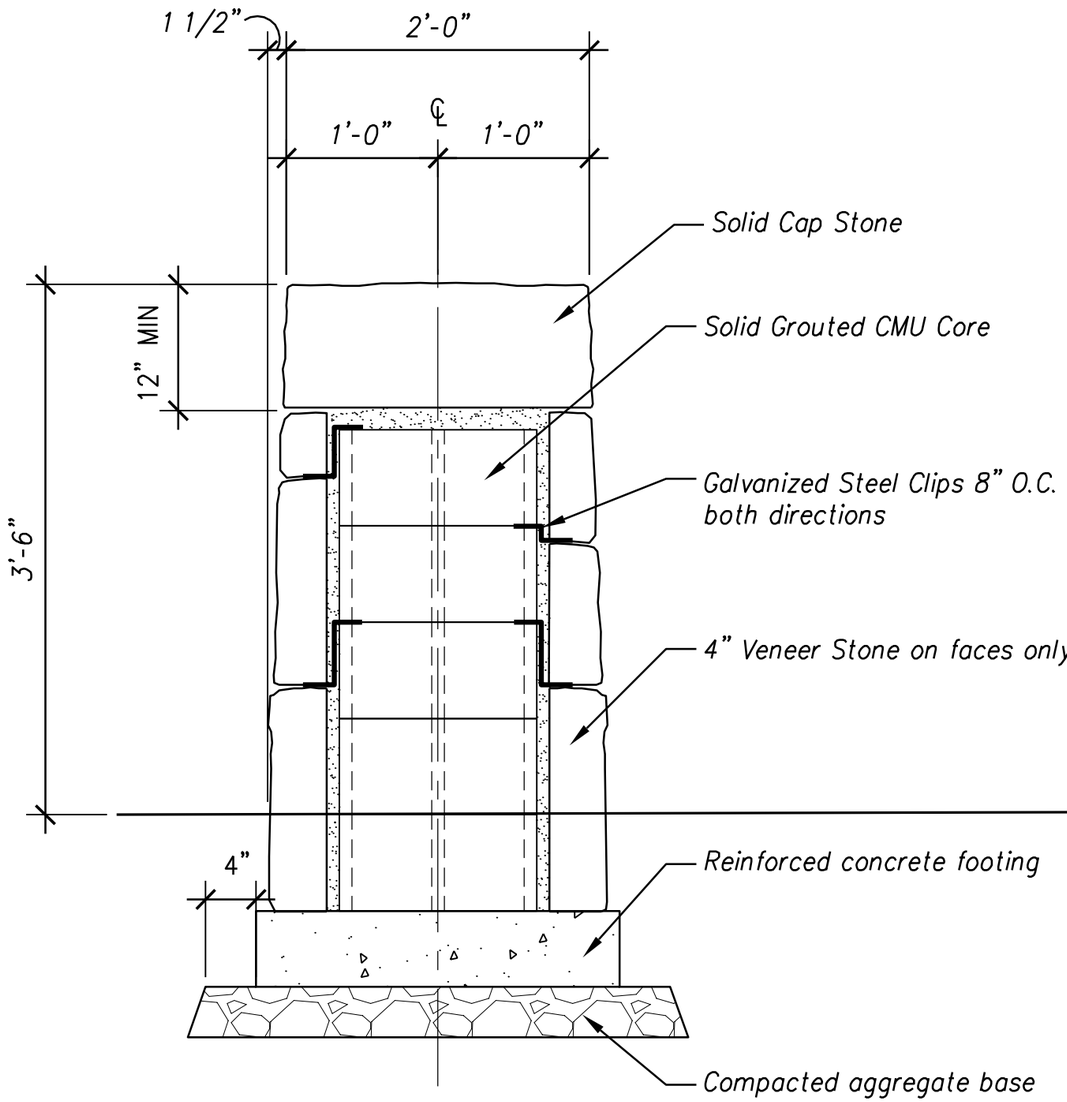

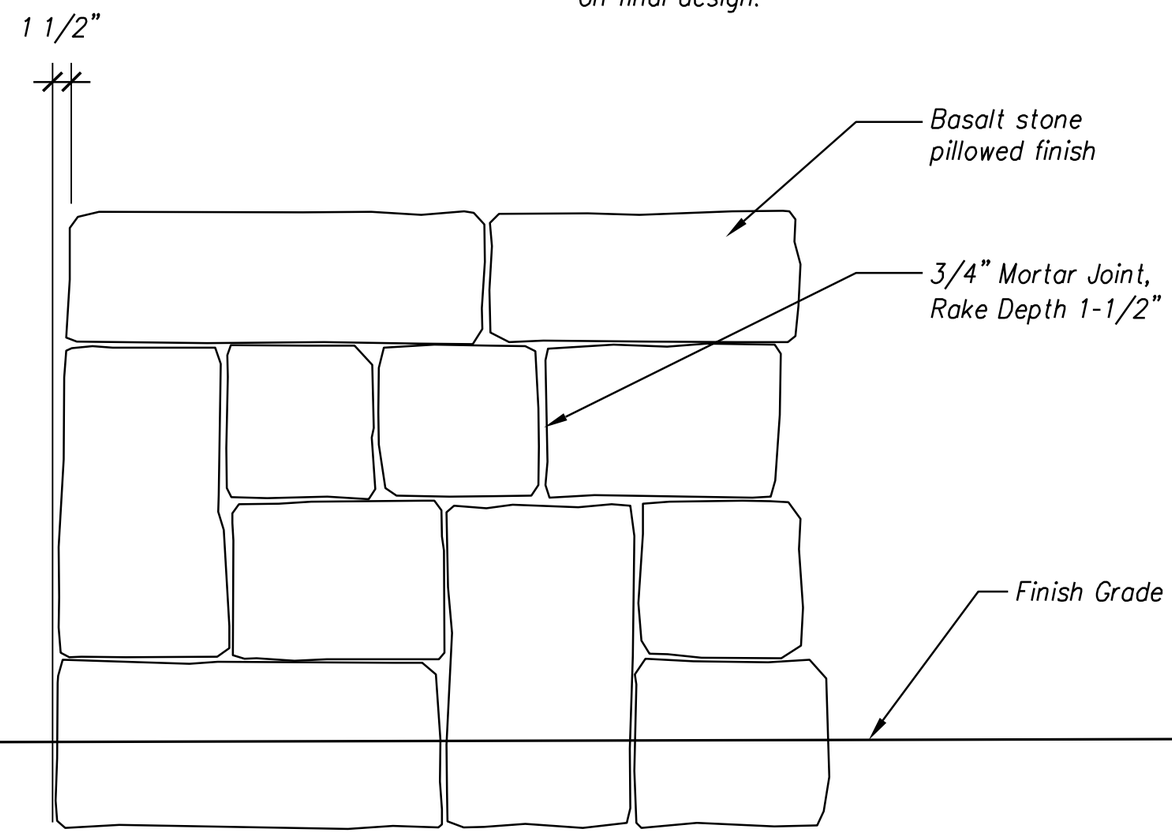

RAILING TYPE C - 42" STONE
SCALE: 1" = 1'-0"

Details
Railing Type C

plotted 6/24/2014 5:25 PM by Aaron Maples
Designed by:
Checked by:

DRAFT	STATE	PROJECT	SHEET NUMBER
	OR	DOT CRGNSA 100(1)	L1.05

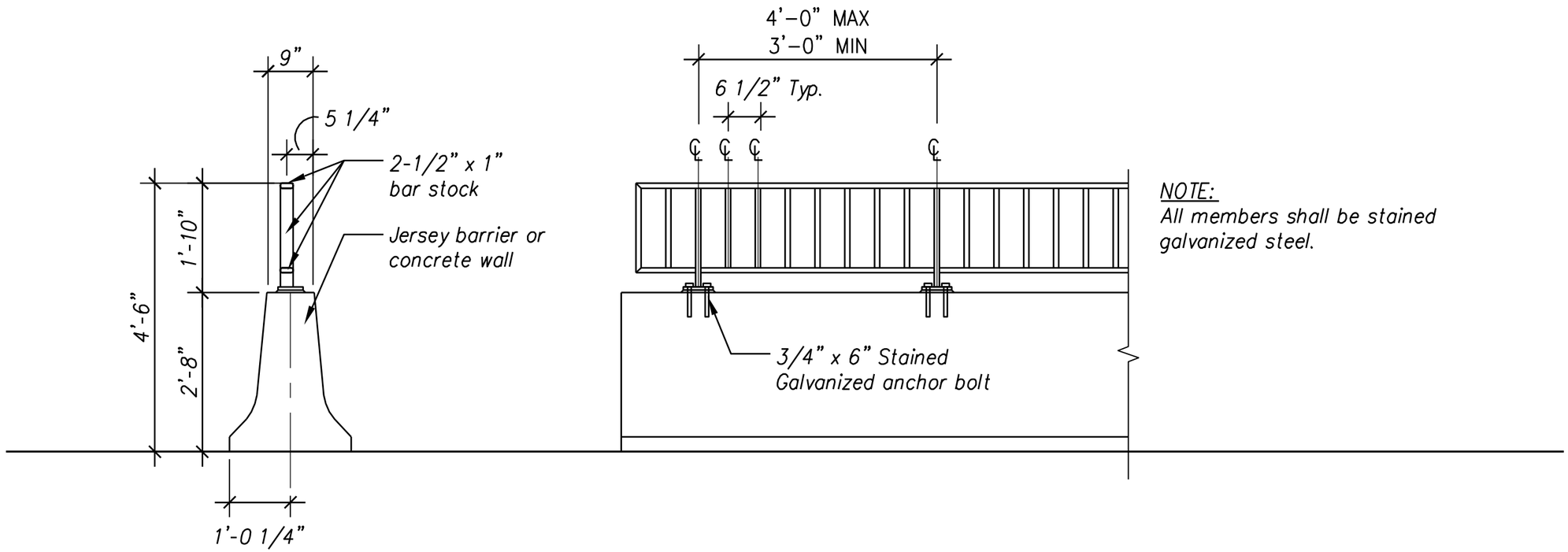

NOTE:
All members shall be stained galvanized steel.

RAILING TYPE D - CONCRETE W/22" STEEL RAIL
SCALE: 1/2" = 1'-0"

Details

Railing Type D

Checked by: --/---
Designed by: --/---
plotted 6/24/2014 5:26 PM by Aaron Maples

DRAFT	STATE	PROJECT	SHEET NUMBER
	OR	DOT CRGNSA 100(1)	L1.06

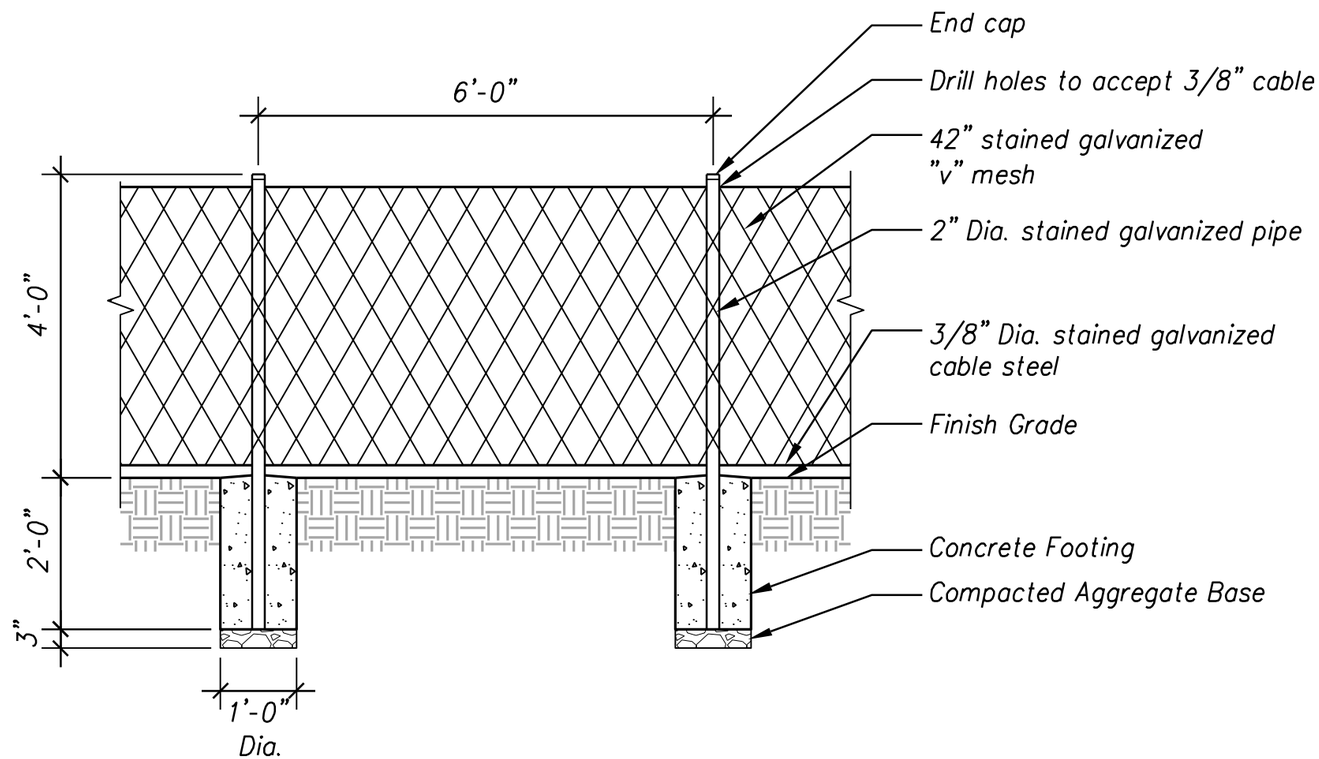

RAILING TYPE F - "V" FENCE
SCALE: 1/2" = 1'-0"

Details

Railing Type F

Checked by: --/---

Designed by: --/---

plotted 6/24/2014 5:26 PM by Aaron Maples

DRAFT	STATE	PROJECT	SHEET NUMBER
	OR	DOT CRGNSA 100(1)	L1.07

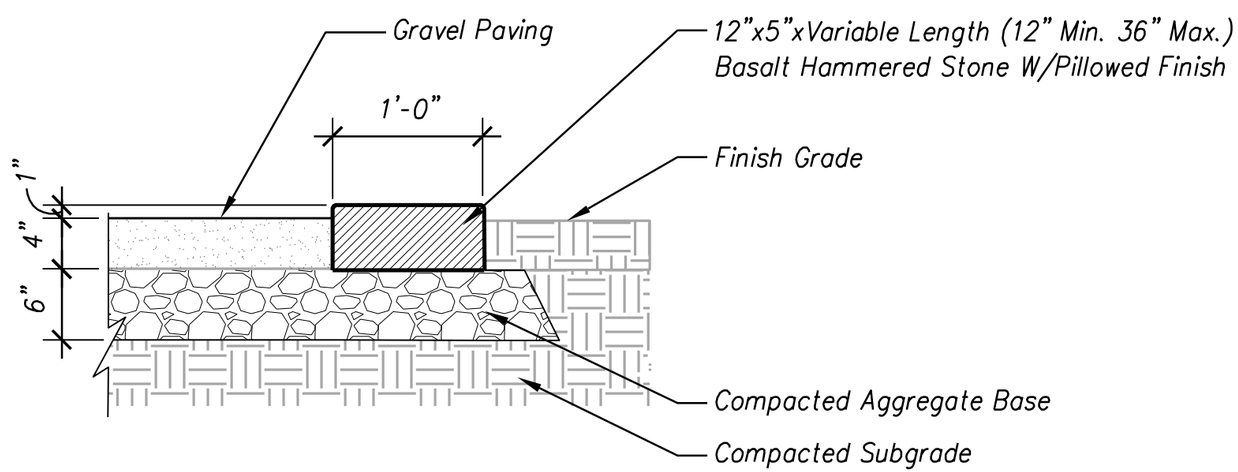

BASALT CURB
SCALE: 1" = 1'-0"

Details

Basalt Curb

Designed by: --/---
Checked by: --/---
plotted 6/24/2014 5:26 PM by Aaron Maples

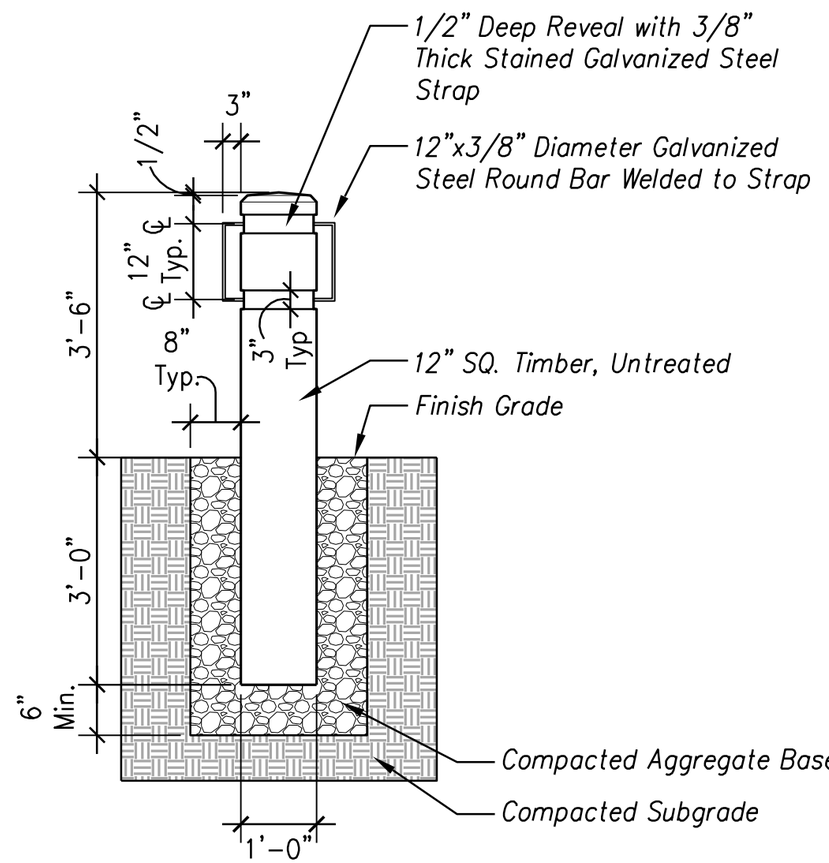

BIKE BOLLARD
SCALE: 1/2" = 1'-0"

Details

Bike Bollard

plotted 6/24/2014 5:26 PM by Aaron Maples
Designed by:
Checked by:

DRAFT	STATE	PROJECT	SHEET NUMBER
	OR	DOT CRGNSA 100(1)	L1.09

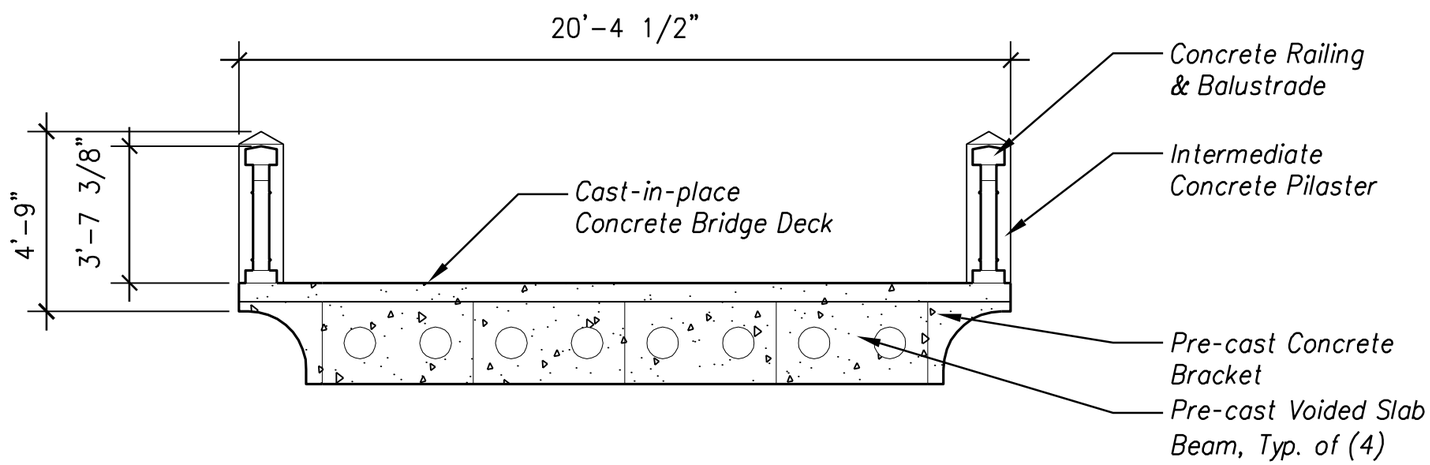

Note: Concrete finish shall be similar to aged concrete.

BRIDGE BALUSTRADE
SCALE: 1/4" = 1'-0"

Details

Warren Creek Bridge Balustrade

plotted 6/24/2014 5:26 PM by Aaron Maples

Designed by: --/---

Checked by: --/---

DRAFT	STATE	PROJECT	SHEET NUMBER
	OR	DOT CRGNSA 100(1)	L1.10

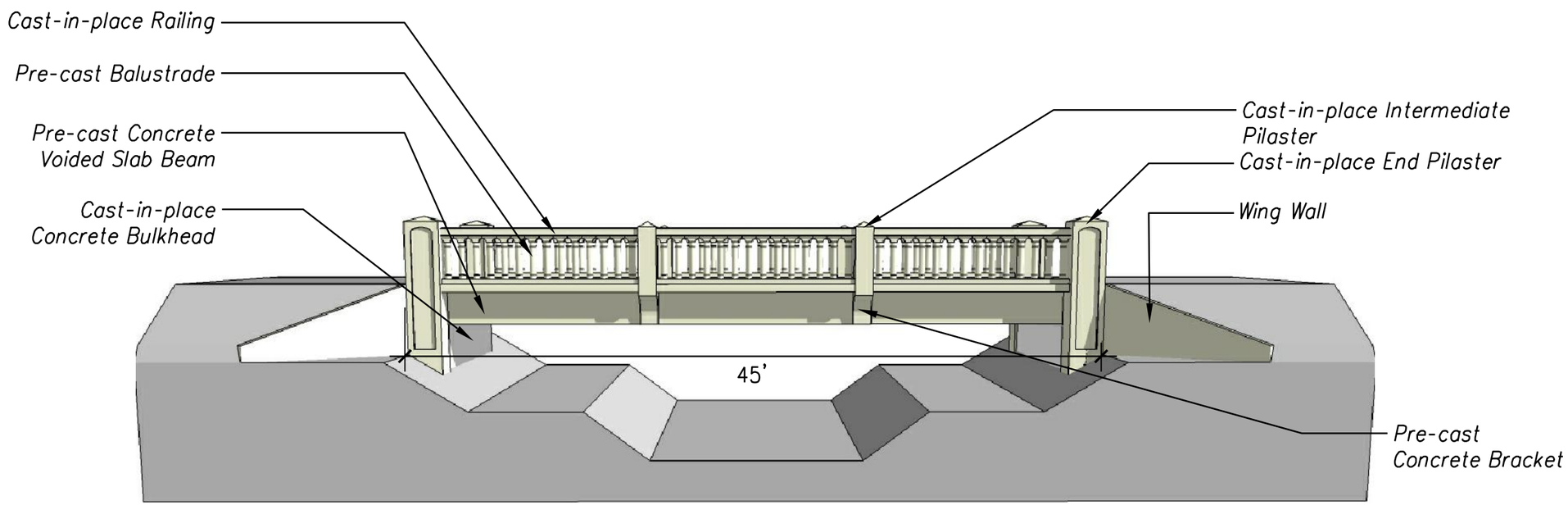

Note: (1) This is an abstract view that is intended to illustrate the proposed structural components and not the location or scale of the viaduct in the landscape.

(2) Concrete finish shall be similar to aged concrete.

BRIDGE ELEVATION
Not to Scale

Details

Warren Creek Bridge Elevation

plotted 6/24/2014 5:26 PM by Aaron Maples | Designed by: | Checked by: | --/--- | --/---

DRAFT	STATE	PROJECT	SHEET NUMBER
	OR	DOT CRGNSA 100(1)	L1.11

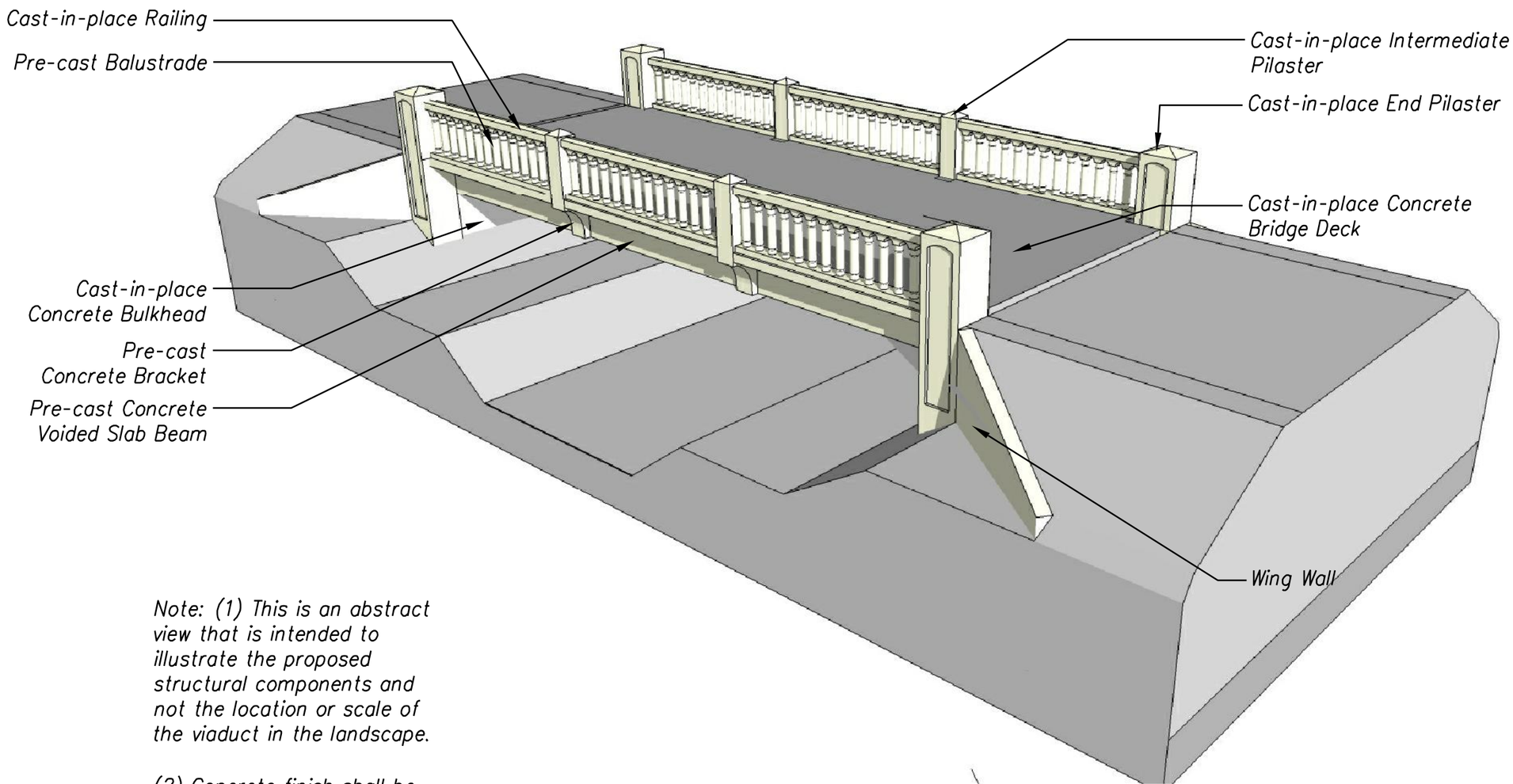

Note: (1) This is an abstract view that is intended to illustrate the proposed structural components and not the location or scale of the viaduct in the landscape.

(2) Concrete finish shall be similar to aged concrete.

BRIDGE PERSPECTIVE
Not to Scale

Details

Warren Creek Bridge Perspective

plotted 6/24/2014 5:27 PM by Aaron Maples | Designed by: | Checked by: | --/---

DRAFT	STATE	PROJECT	SHEET NUMBER
	OR	DOT CRGNSA 100(1)	L1.12

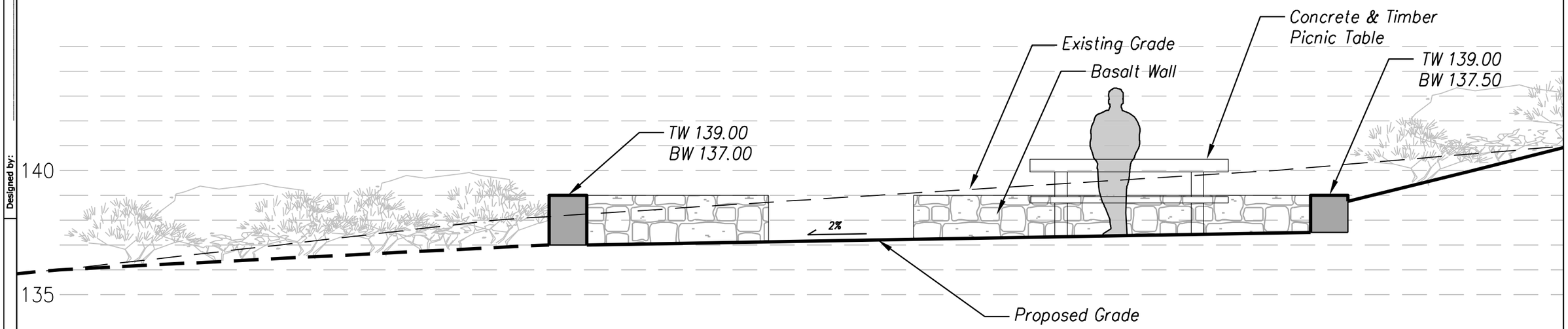

PICNIC AREA SECTION
Scale: 1/4" = 1'-0"

Details

Hole-in-the-Wall Falls Section, Picnic Area

Checked by: --/---

Designed by: --/---

plotted 6/24/2014 5:27 PM by Aaron Maples

DRAFT	STATE	PROJECT	SHEET NUMBER
	OR	DOT CRGNSA 100(1)	L2.01

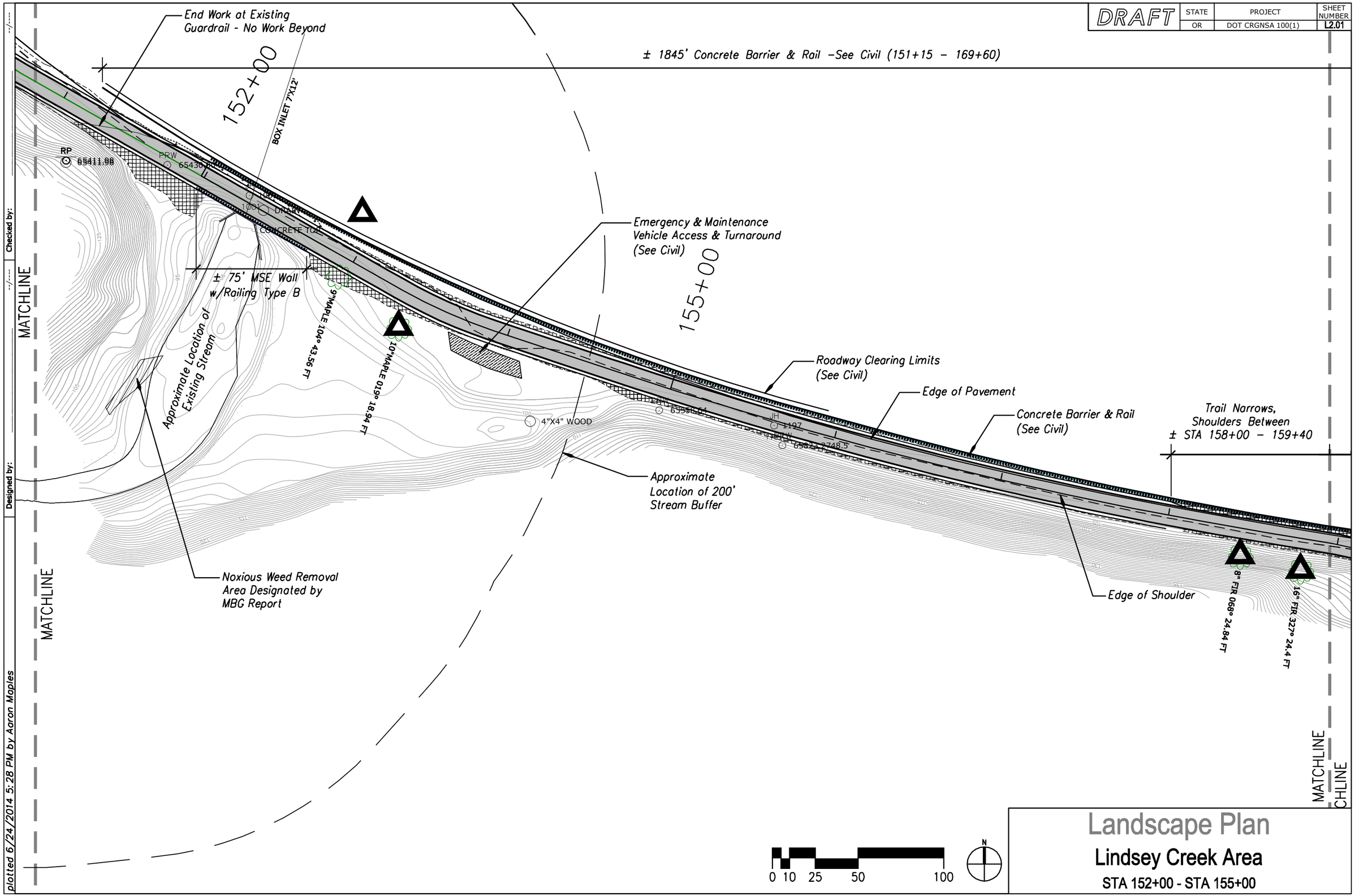

Landscape Plan

Lindsey Creek Area

STA 152+00 - STA 155+00

Checked by:

Designed by:

plotted 6/24/2014 5:28 PM by Aaron Maples

DRAFT	STATE	PROJECT	SHEET NUMBER
	OR	DOT CRGNSA 100(1)	L2.02

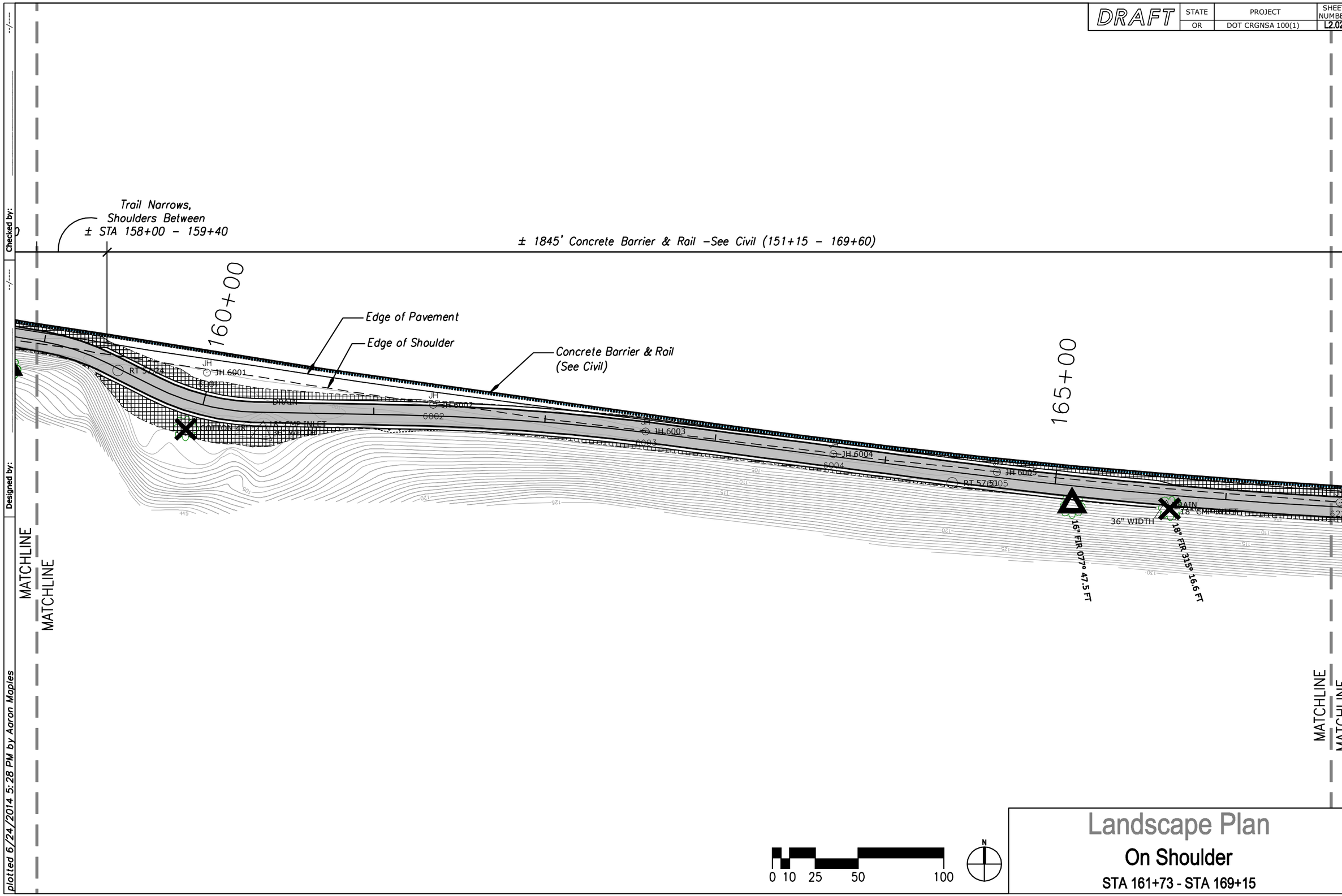

Landscape Plan

On Shoulder

STA 161+73 - STA 169+15

Checked by:

Designed by:

plotted 6/24/2014 5:28 PM by Aaron Maples

DRAFT	STATE	PROJECT	SHEET NUMBER
	OR	DOT CRGNSA 100(1)	L2.03

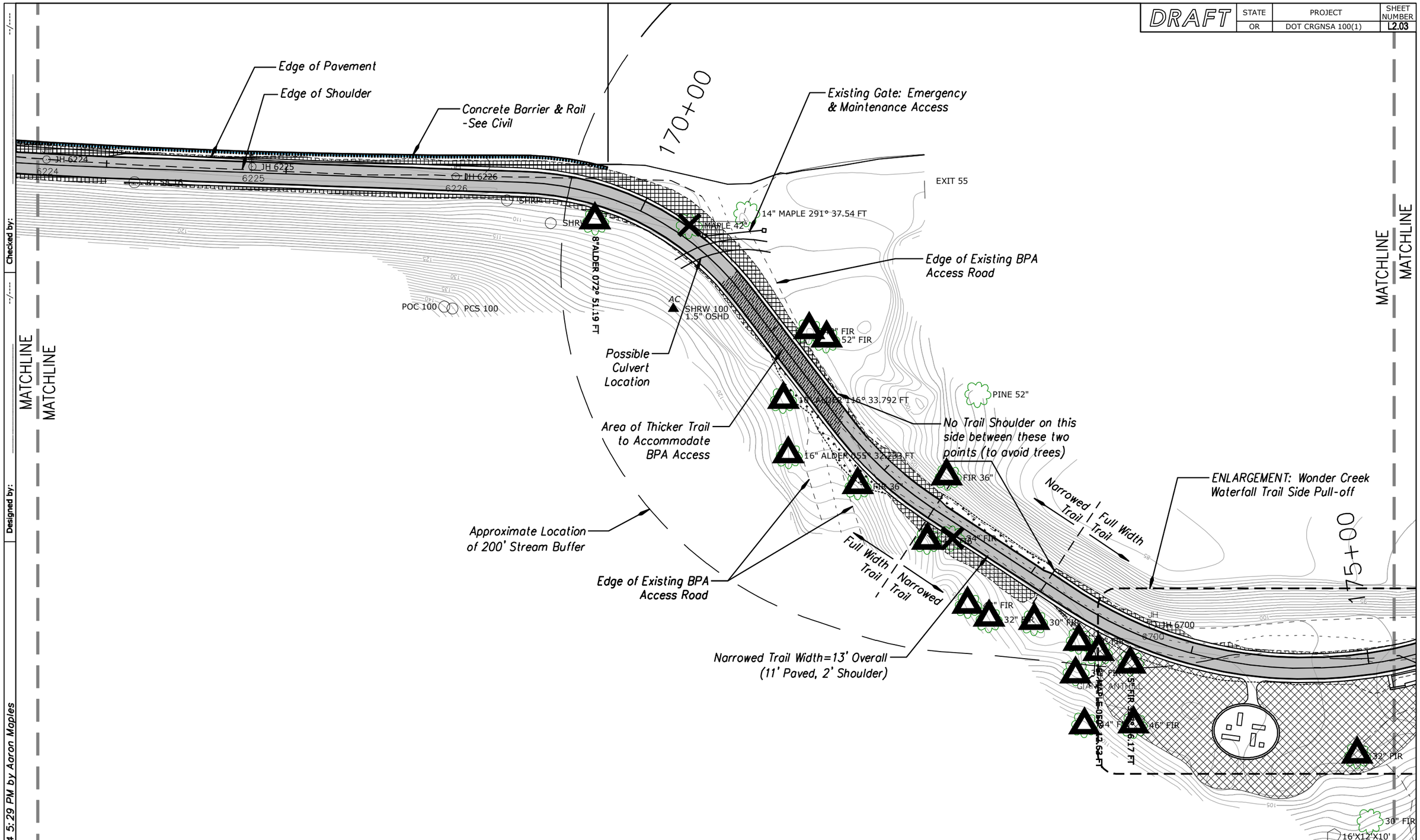

Landscape Plan

On Embankment

STA 169+15 - STA 175+50

Checked by:

Designed by:

plotted 6/24/2014 5:29 PM by Aaron Maples

DRAFT	STATE	PROJECT	SHEET NUMBER
	OR	DOT CRGNSA 100(1)	L2.04

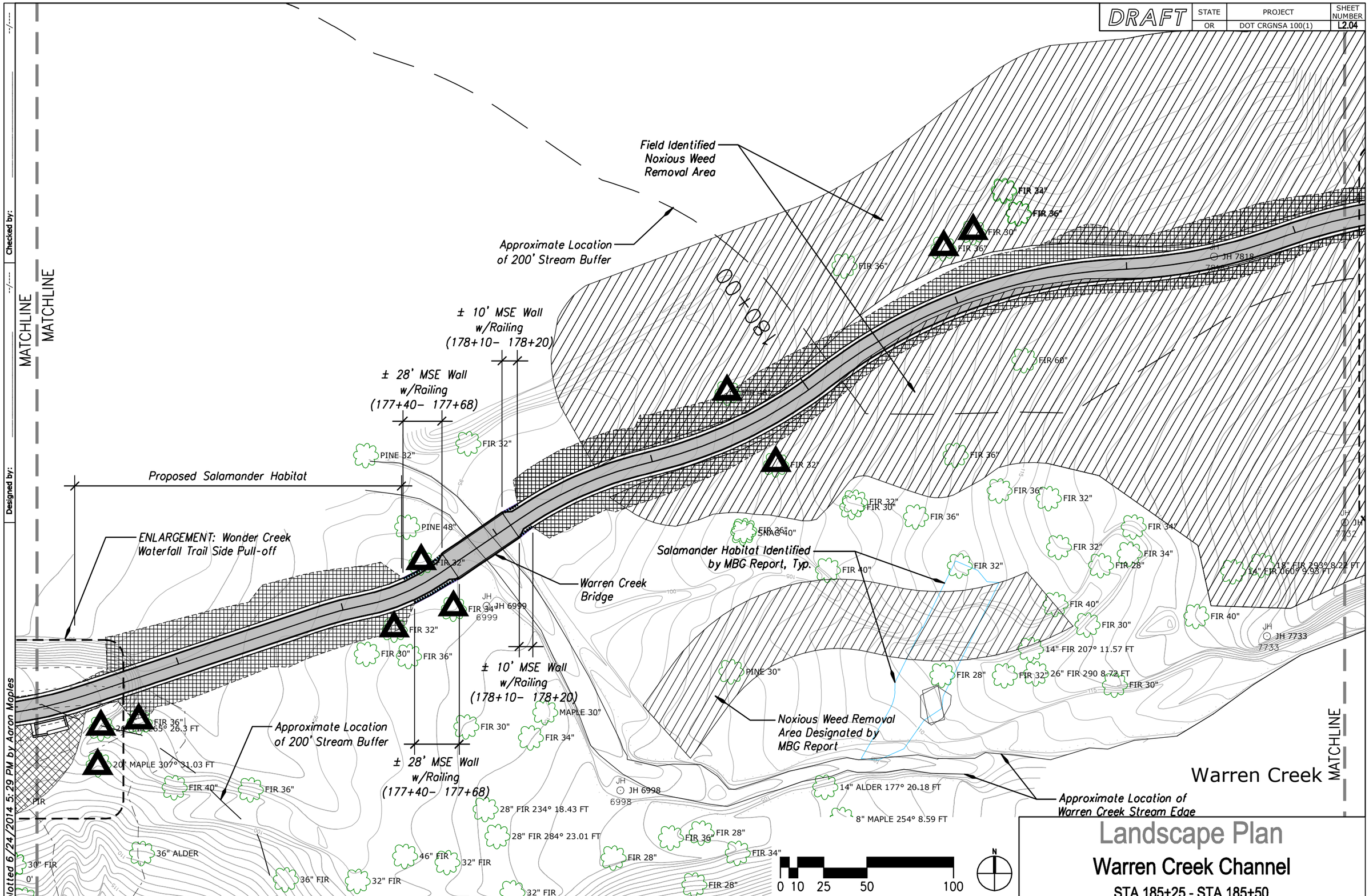

Landscape Plan

Warren Creek Channel

STA 185+25 - STA 185+50

Designed by:
Checked by:
plotted 6/24/2014 5:29 PM by Aaron Maples

DRAFT	STATE	PROJECT	SHEET NUMBER
	OR	DOT CRGNSA 100(1)	L2.05

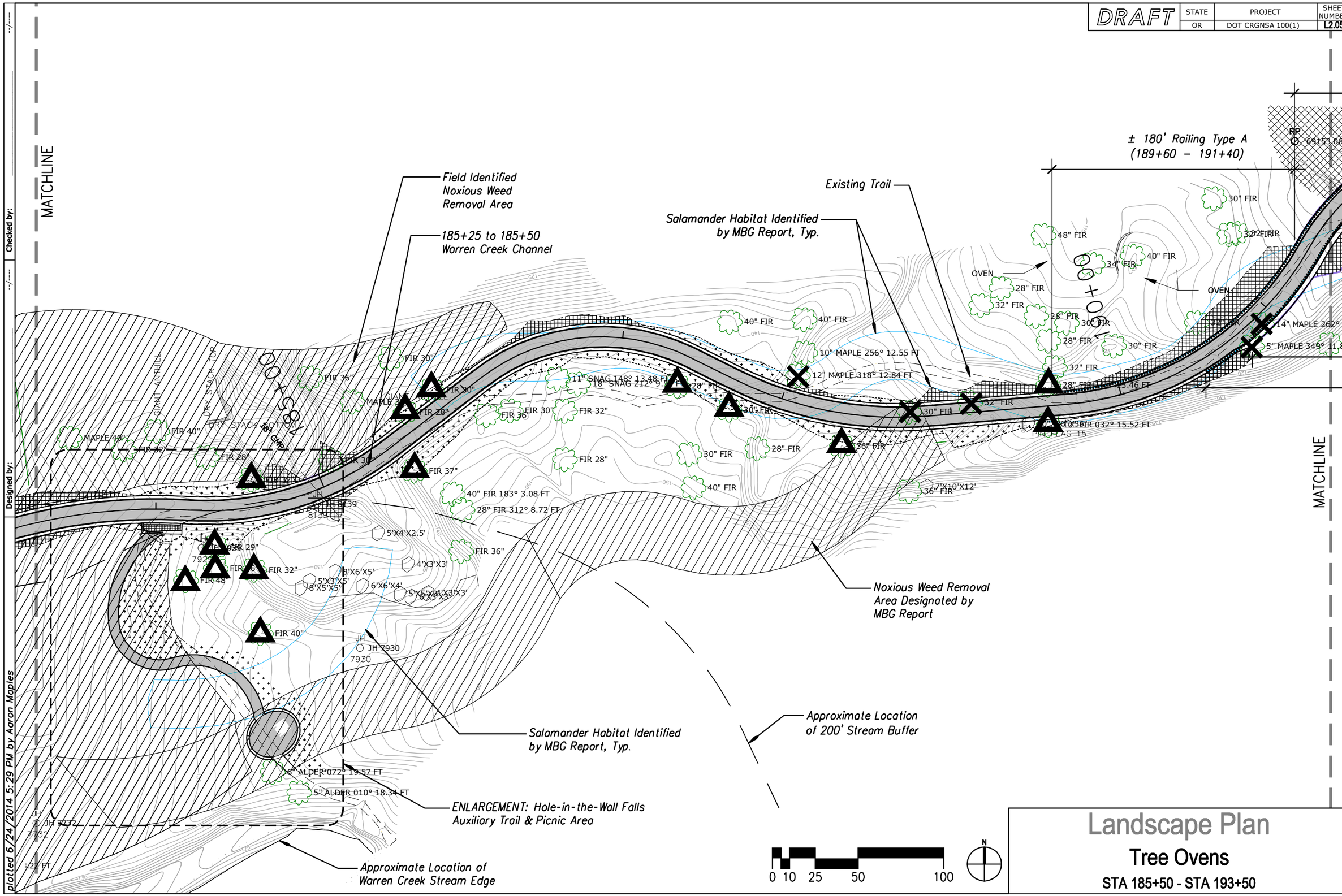

Landscape Plan

Tree Ovens

STA 185+50 - STA 193+50

Designed by:
Checked by:
plotted 6/24/2014 5:29 PM by Aaron Maples

DRAFT	STATE	PROJECT	SHEET NUMBER
	OR	DOT CRGNSA 100(1)	L2.06

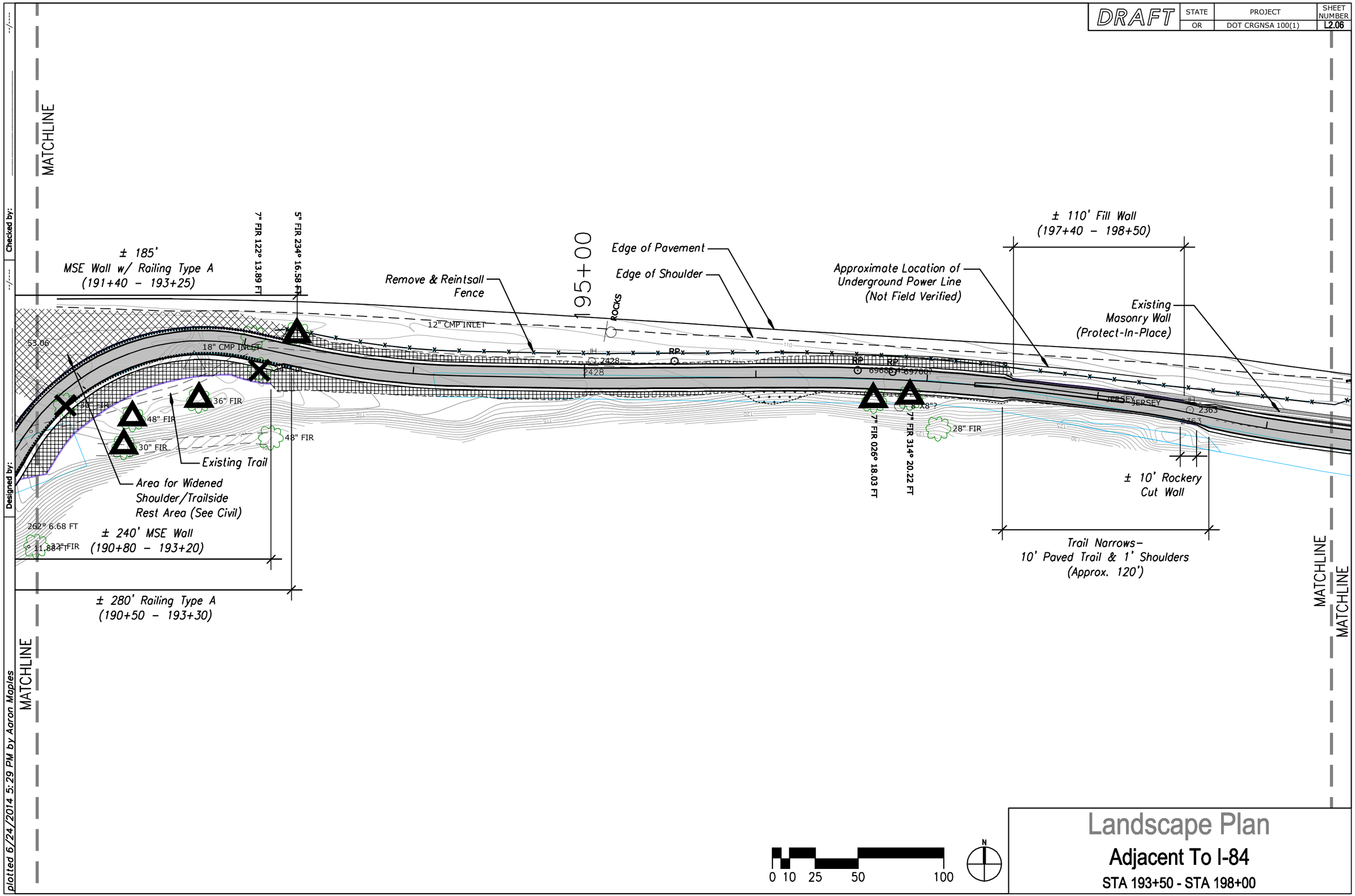

Landscape Plan

Adjacent To I-84

STA 193+50 - STA 198+00

Checked by:

Designed by:

plotted 6/24/2014 5:29 PM by Aaron Maples

DRAFT	STATE	PROJECT	SHEET NUMBER
	OR	DOT CRGNSA 100(1)	L2.07

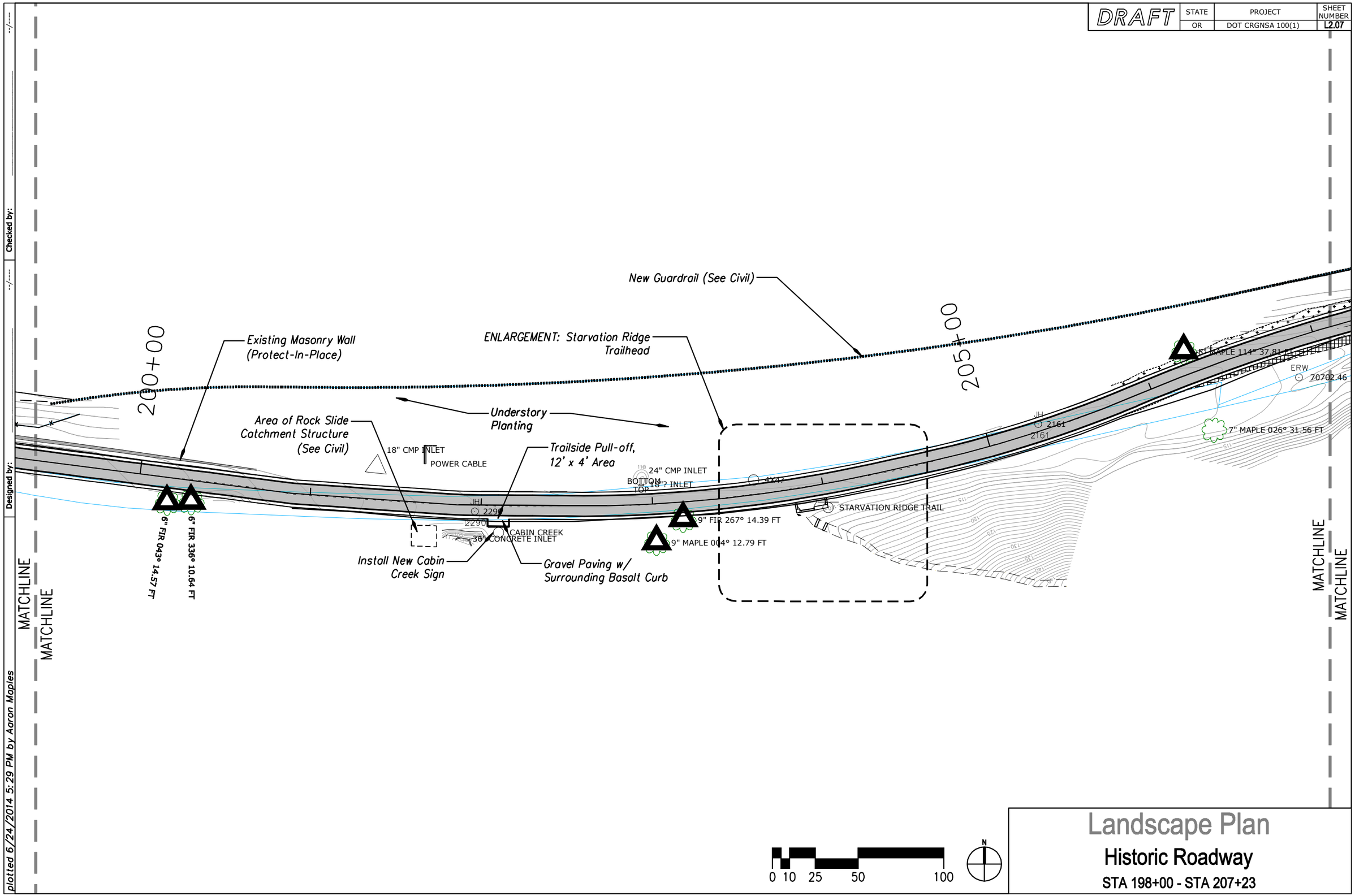

Landscape Plan

Historic Roadway

STA 198+00 - STA 207+23

Designed by:

Checked by:

plotted 6/24/2014 5:29 PM by Aaron Maples

DRAFT	STATE	PROJECT	SHEET NUMBER
	OR	DOT CRGNSA 100(1)	L2.08

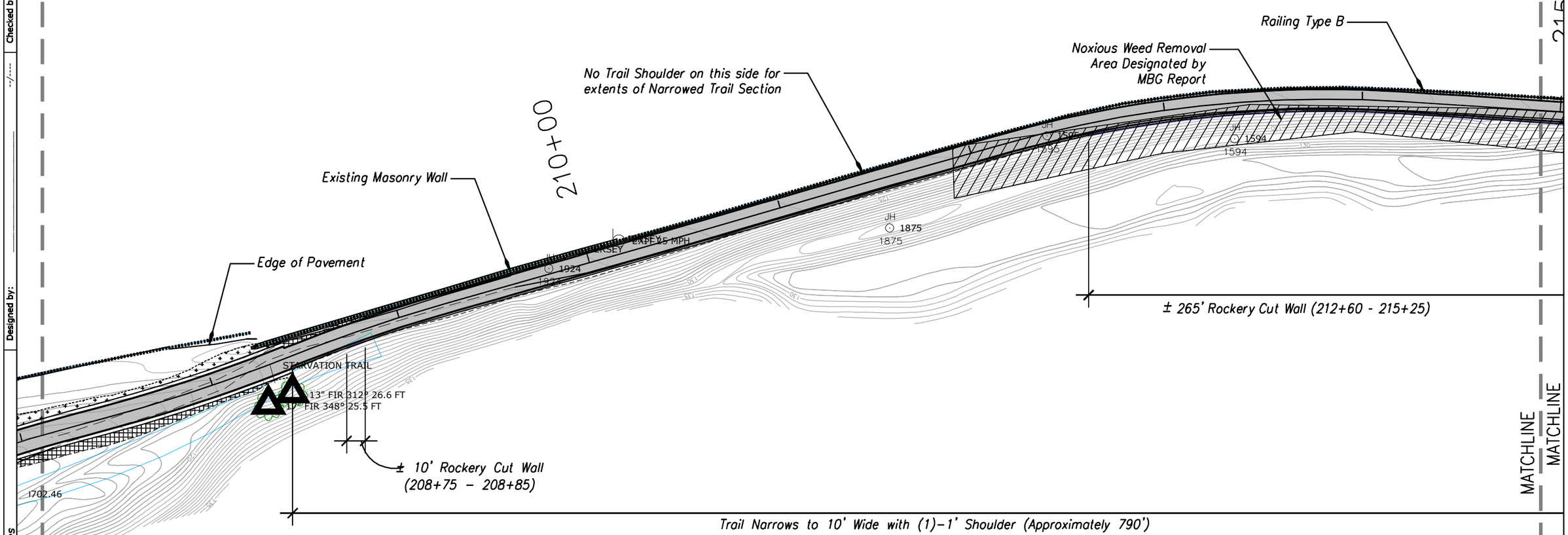

0 10 25 50 100

N

Landscape Plan

Trail Along Off-Ramp

STA 207+23 - STA 216+00

Designed by:

Checked by:

plotted 6/24/2014 5:30 PM by Aaron Maples

MATCHLINE

MATCHLINE

DRAFT	STATE	PROJECT	SHEET NUMBER
	OR	DOT CRGNSA 100(1)	L2.09

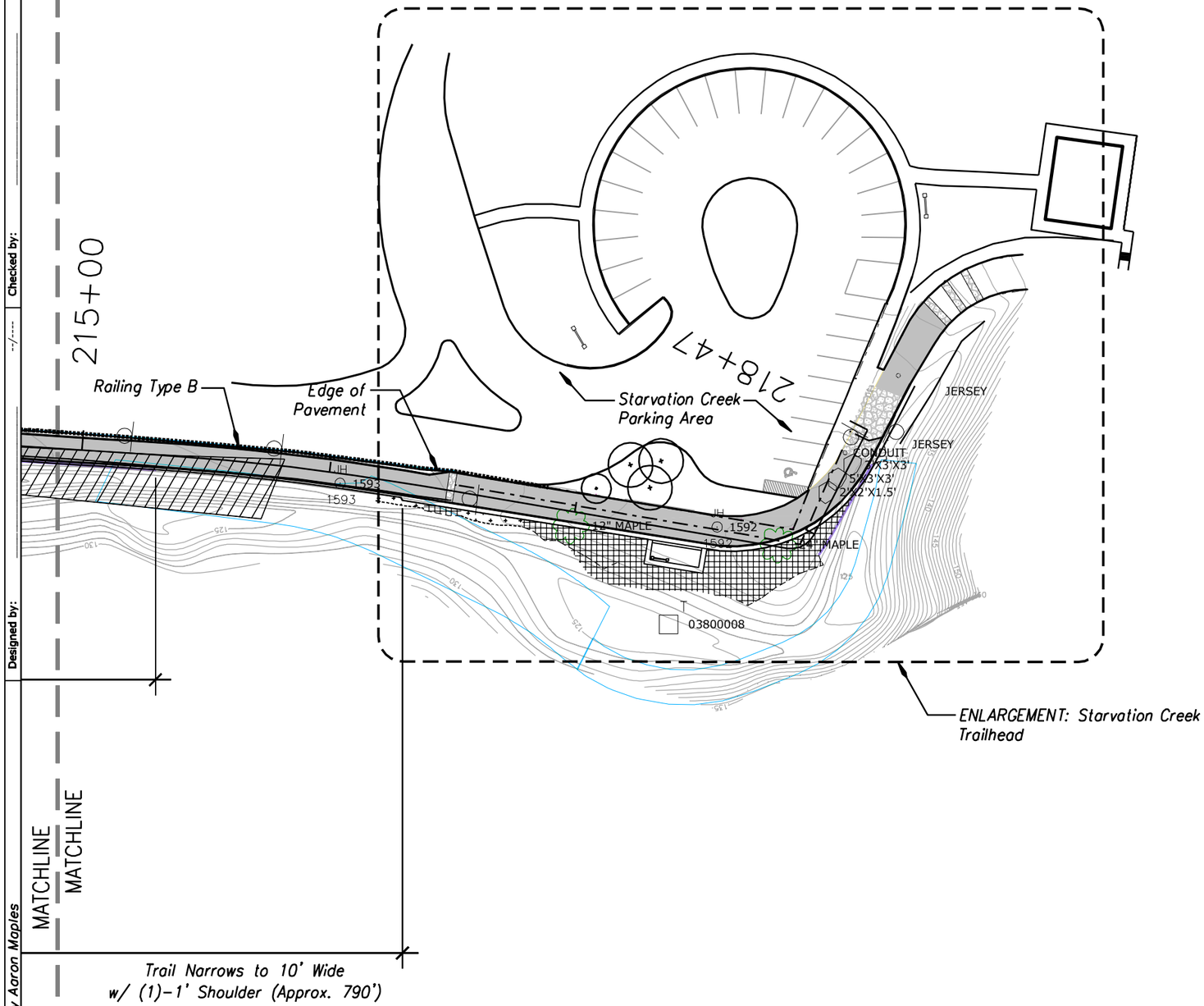

0 10 25 50 100

N

Landscape Plan

Trail Along Parking Lot

STA 216+00 - STA 219+75

plotted 6/24/2014 5:30 PM by Aaron Maples

Designed by:

Checked by:

DRAFT	STATE	PROJECT	SHEET NUMBER
	OR	DOT CRGNSA 100(1)	L3.01

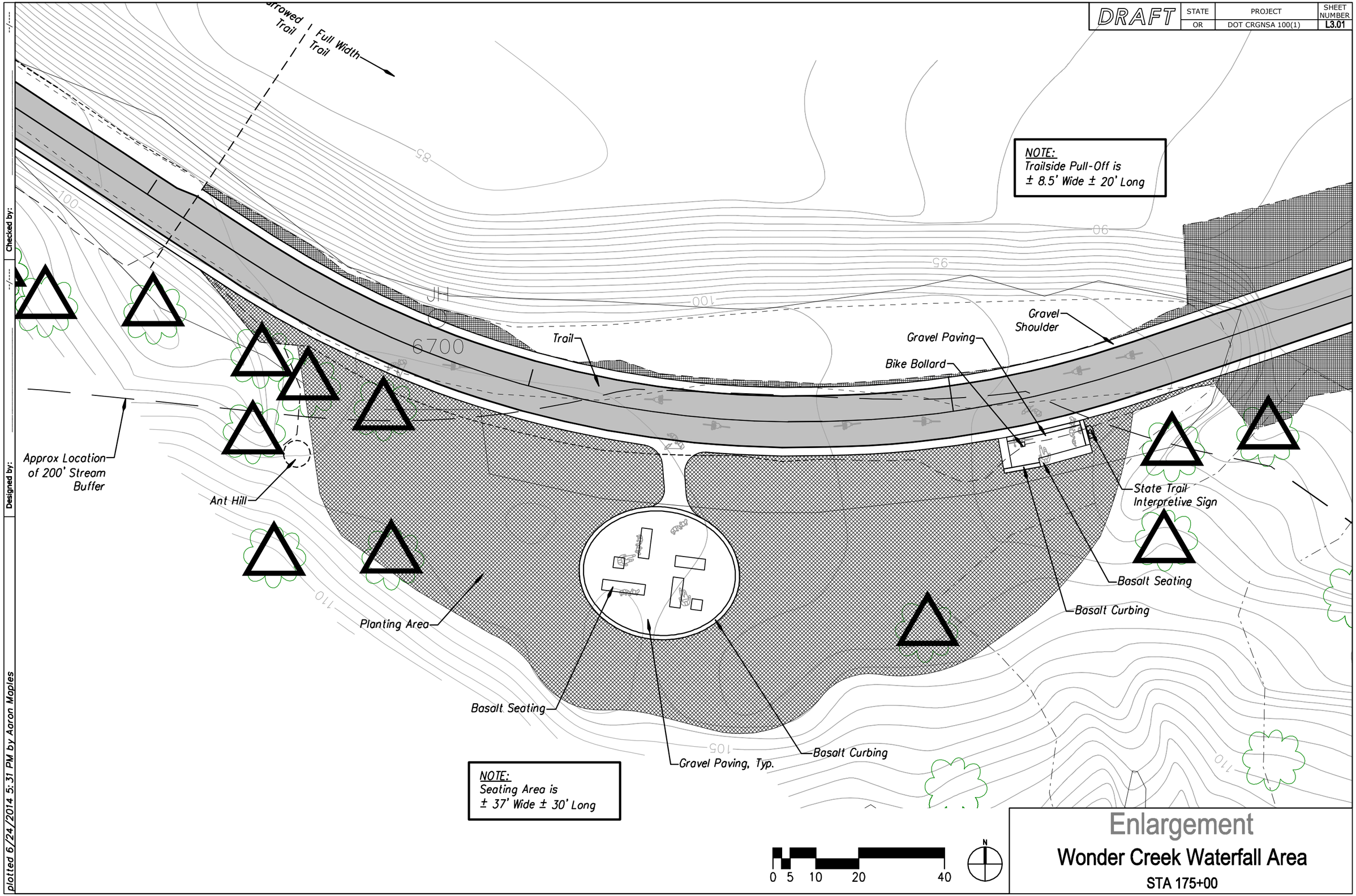

Enlargement

Wonder Creek Waterfall Area

STA 175+00

Checked by:

Designed by:

plotted 6/24/2014 5:31 PM by Aaron Maples

DRAFT	STATE	PROJECT	SHEET NUMBER
	OR	DOT CRGNSA 100(1)	L3.02

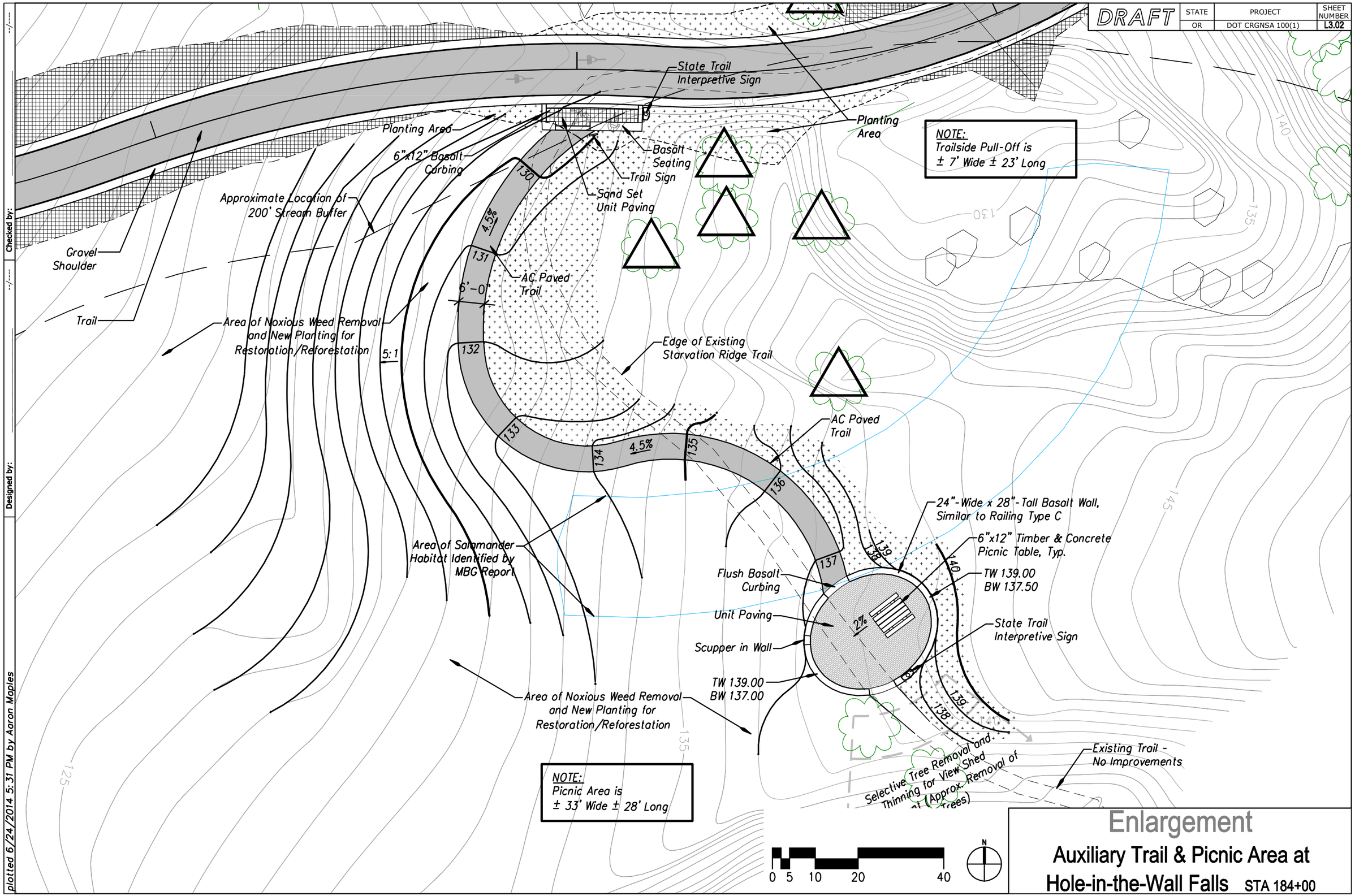

Enlargement

Auxiliary Trail & Picnic Area at Hole-in-the-Wall Falls STA 184+00

Designed by:

Checked by:

plotted 6/24/2014 5:31 PM by Aaron Maples

DRAFT	STATE	PROJECT	SHEET NUMBER
	OR	DOT CRGNSA 100(1)	L3.03

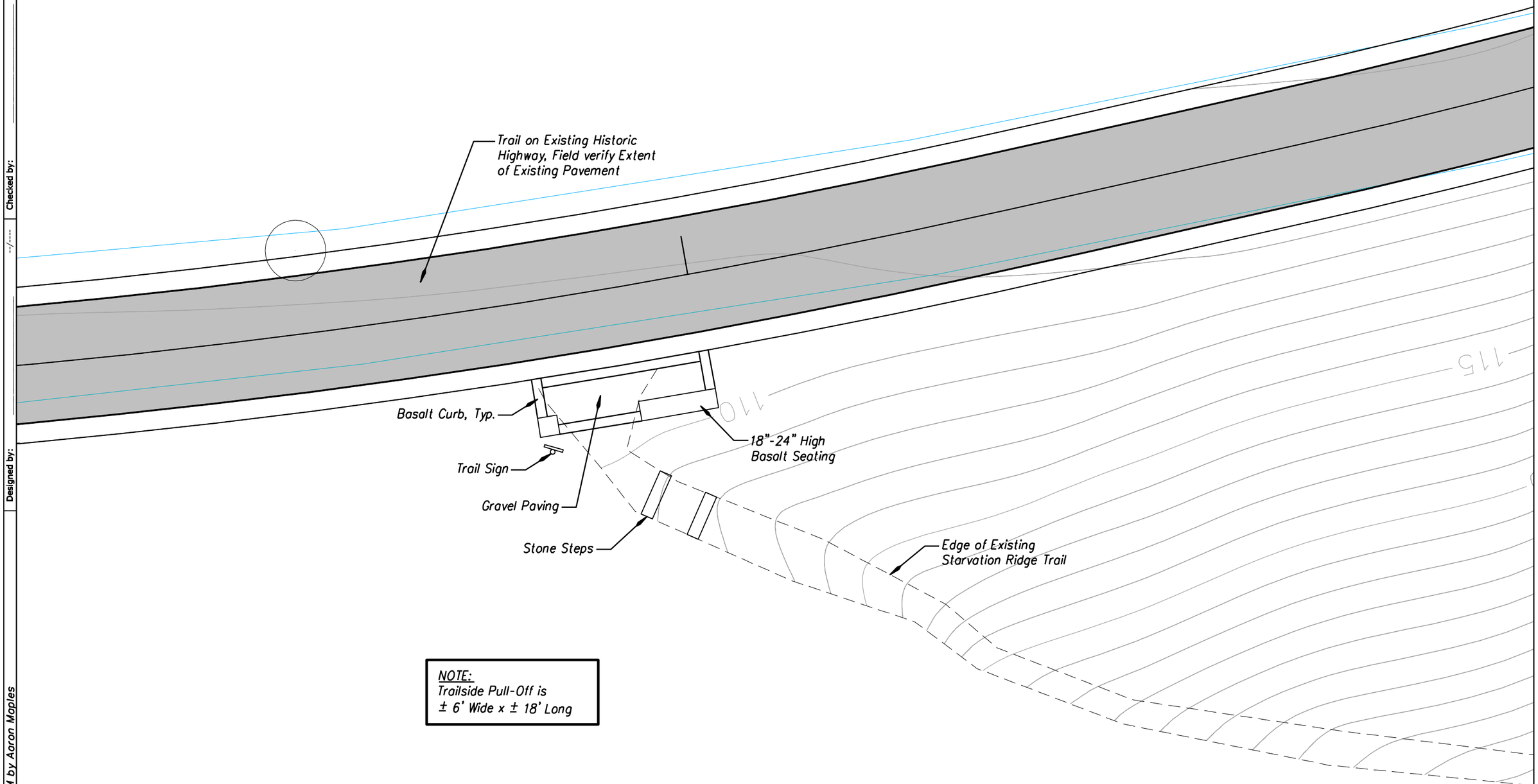

NOTE:
Trailside Pull-Off is
± 6' Wide x ± 18' Long

Enlargement

Starvation Ridge Trailhead

STA 204+00

Designed by: | Checked by: | --/---- | --/----

plotted 6/24/2014 5:31 PM by Aaron Maples

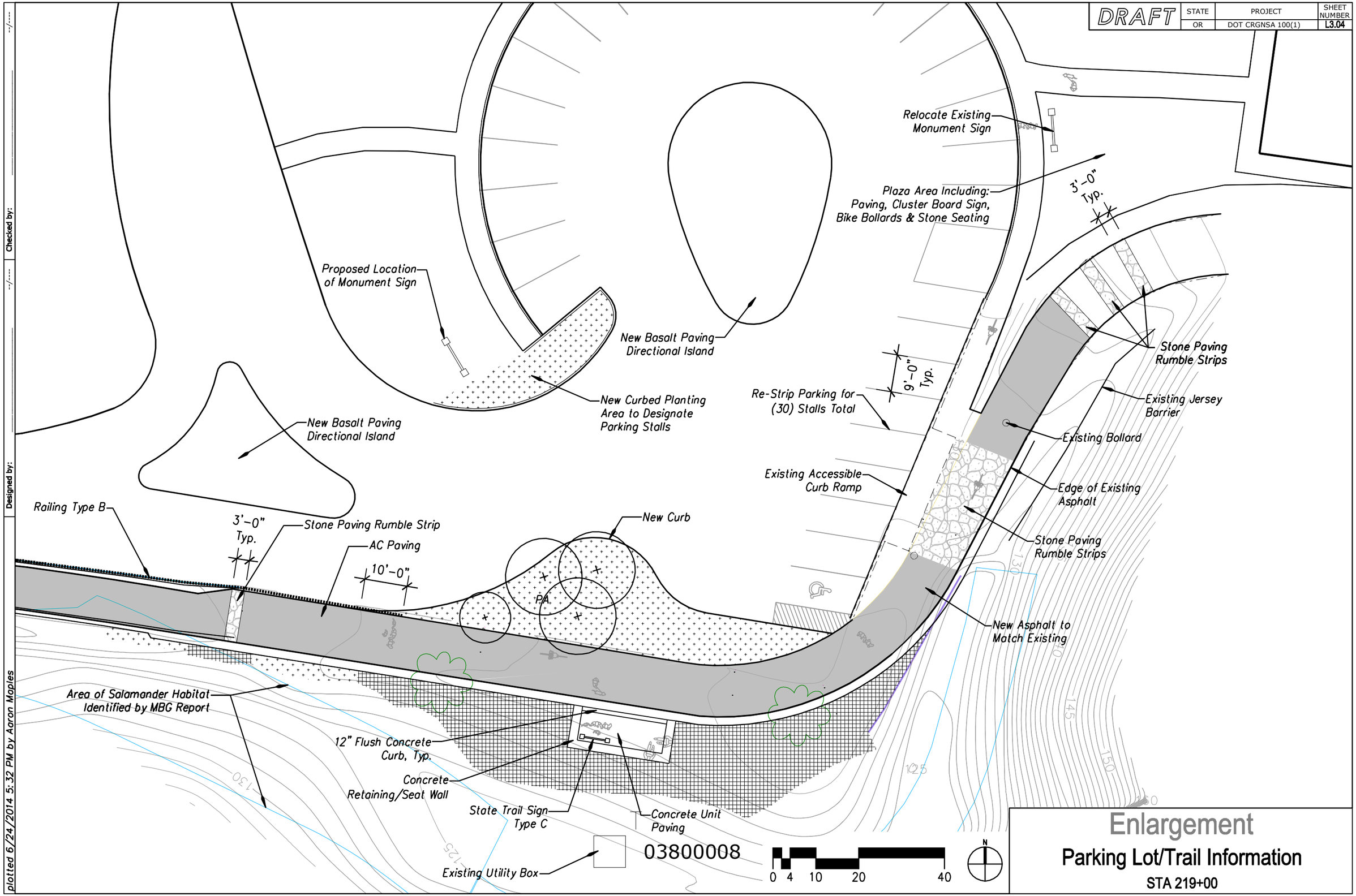
DRAFT
STATE
OR
PROJECT
DOT CRGNSA 100(1)
SHEET NUMBER
L3.04
Relocate Existing Monument Sign
Plaza Area Including: Paving, Cluster Board Sign, Bike Bollards & Stone Seating
3'-0" Typ.
Proposed Location of Monument Sign
New Basalt Paving Directional Island
Stone Paving Rumble Strips
9'-0" Typ.
Re-Strip Parking for (30) Stalls Total
Existing Jersey Barrier
New Curbed Planting Area to Designate Parking Stalls
New Basalt Paving Directional Island
Existing Bollard
Existing Accessible Curb Ramp
Edge of Existing Asphalt
Railing Type B
3'-0" Typ.
Stone Paving Rumble Strip
New Curb
AC Paving
10'-0"
Stone Paving Rumble Strips
P.A.
New Asphalt to Match Existing
Area of Salamander Habitat Identified by MBG Report
12" Flush Concrete Curb, Typ.
Concrete Retaining/Seat Wall
State Trail Sign Type C
Concrete Unit Paving
Existing Utility Box
03800008
0 4 10 20 40
N
Enlargement
Parking Lot/Trail Information
STA 219+00
Designed by:
Checked by:
plotted 6/24/2014 5:32 PM by Aaron Maples