INDEX OF SHEETS	
SHEET NO.	DESCRIPTION
1	Title Sheet
1A	Index Of Sheets Cont'd. & Std. Drg. Nos.

STATE OF OREGON

DEPARTMENT OF TRANSPORTATION

PLANS FOR PROPOSED PROJECT

BRIDGE PAINTING

US101: COLUMBIA RIVER (ASTORIA - MEGLER)
BRIDGE #07949A SECTION

OREGON COAST HIGHWAY

CLATSOP COUNTY

JANUARY 2012

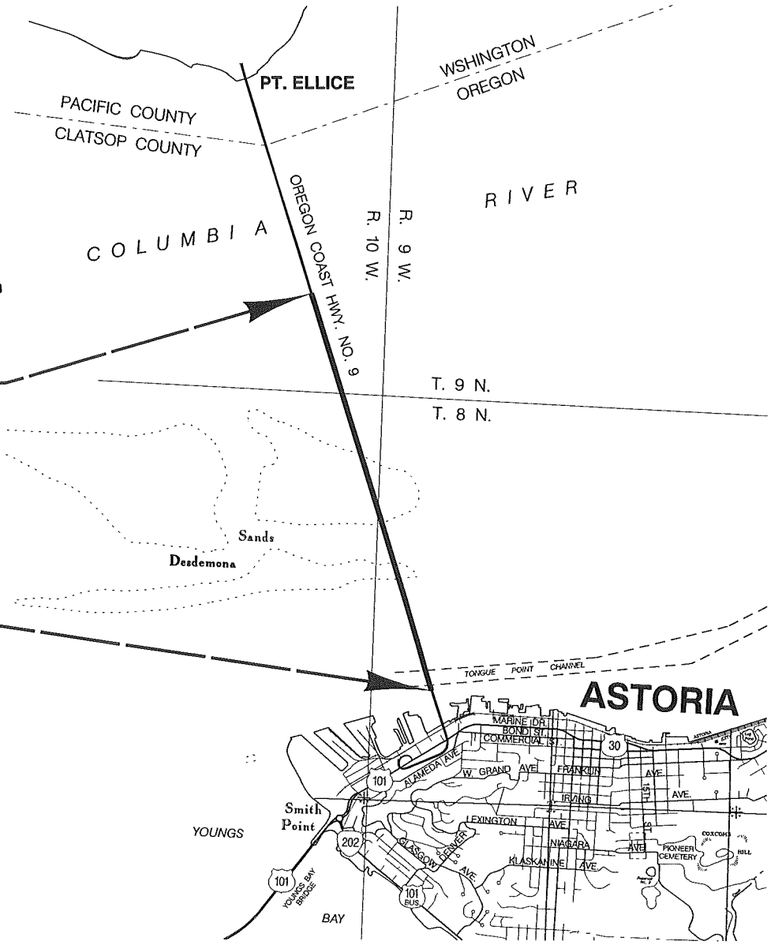

BEGINNING OF PROJECT
BHF-S009(372)
M.P. 1.80

END OF PROJECT
BHF-S009(372)
M.P. 3.03

T. 9 N., R. 10 W., W.M.

DRAFT DESIGN ACCEPTED PLANS INFORMATION ONLY

4?V-??

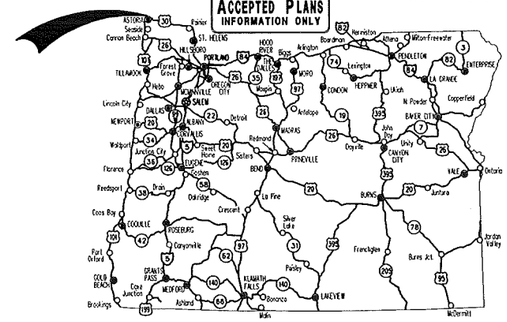

Overall Length Of Project - 1.23 Miles

ATTENTION:
Oregon Law Requires You To Follow Rules Adopted By The Oregon Utility Notification Center. Those Rules Are Set Forth In OAR 952-001-0010 Through OAR 952-001-0090. You May Obtain Copies Of The Rules By Calling The Center. (Note: The Telephone Number For The Oregon Utility Center Is (503) 232-1987.)

LET'S ALL WORK TOGETHER TO MAKE THIS JOB SAFE

OREGON TRANSPORTATION COMMISSION

Gail Achterman	CHAIR
Michael Nelson	VICE-CHAIR
Mary F. Olson	COMMISSIONER
Alan Brown	COMMISSIONER
David Lohman	COMMISSIONER
Matthew L. Garrett	DIRECTOR OF TRANSPORTATION

These plans were developed using ODOT design standards. Exceptions to these standards, if any, have been submitted and approved by the ODOT Chief Engineer or their delegated authority.

By: _____
Signature & date

Carol A. Cartwright - R2 Tech Center Manager
Print name and title

_____
Concurrence by ODOT Chief Engineer

US101: COLUMBIA RIVER (ASTORIA - MEGLER)
BRIDGE #07949A SECTION
OREGON COAST HIGHWAY
CLATSOP COUNTY

FEDERAL HIGHWAY ADMINISTRATION	PROJECT NUMBER	SHEET NO.
OREGON DIVISION	BHF-S009(372)	1

PE00 1312 000

\\wpdotclr1004\hwye07w\ODOT_DATA\PROJECTS\14183_Astoria-Megler-Bridge\14183r2.tsl :: Default 7/13/2011 8:50:26 PM hwye23s

1:1200_BL - 001

ADVANCE COPY
SUBJECT TO CHANGE

45V-??

INDEX OF SHEETS, CONT'D.	
DRAWING NO.	DESCRIPTION
2	Details
	STRUCTURE NO. 07949C
00000	Elevation, Work Items, Notes & Location Map
00000	Access Stairs Repair Details
00000	Rivet Replacement Details
00000	Torsional Stiffener Replacement
00000	Stair Access Platform @ L18
	FOR INFORMATION ONLY
	(As Built Drawings)
17701 Thru 17710	
17757 & 17758	
17761 Thru 17764	

Standard Drg. Nos.

TM200	- Sign Installation Details
TM670	- Perm. Signing Wood Post Supports Sizing Charts
TM671	- 3 Second Gust Wind Speed Isotach
TM677	- Sign Mounts
TM681, TM687, TM688	- Square Tube Sign Supports
TM800	- Tables, Abrupt Edge And PCMS Details
TM850	- 2-Lane, 2 Way Roadways

No R/W Map

US101: COLUMBIA RIVER (ASTORIA - MEGLER)
BRIDGE #07949C SECTION
OREGON COAST HIGHWAY
CLATSOP COUNTY

FEDERAL HIGHWAY ADMINISTRATION	PROJECT NUMBER	SHEET NO.
OREGON DIVISION		1A

45V-??

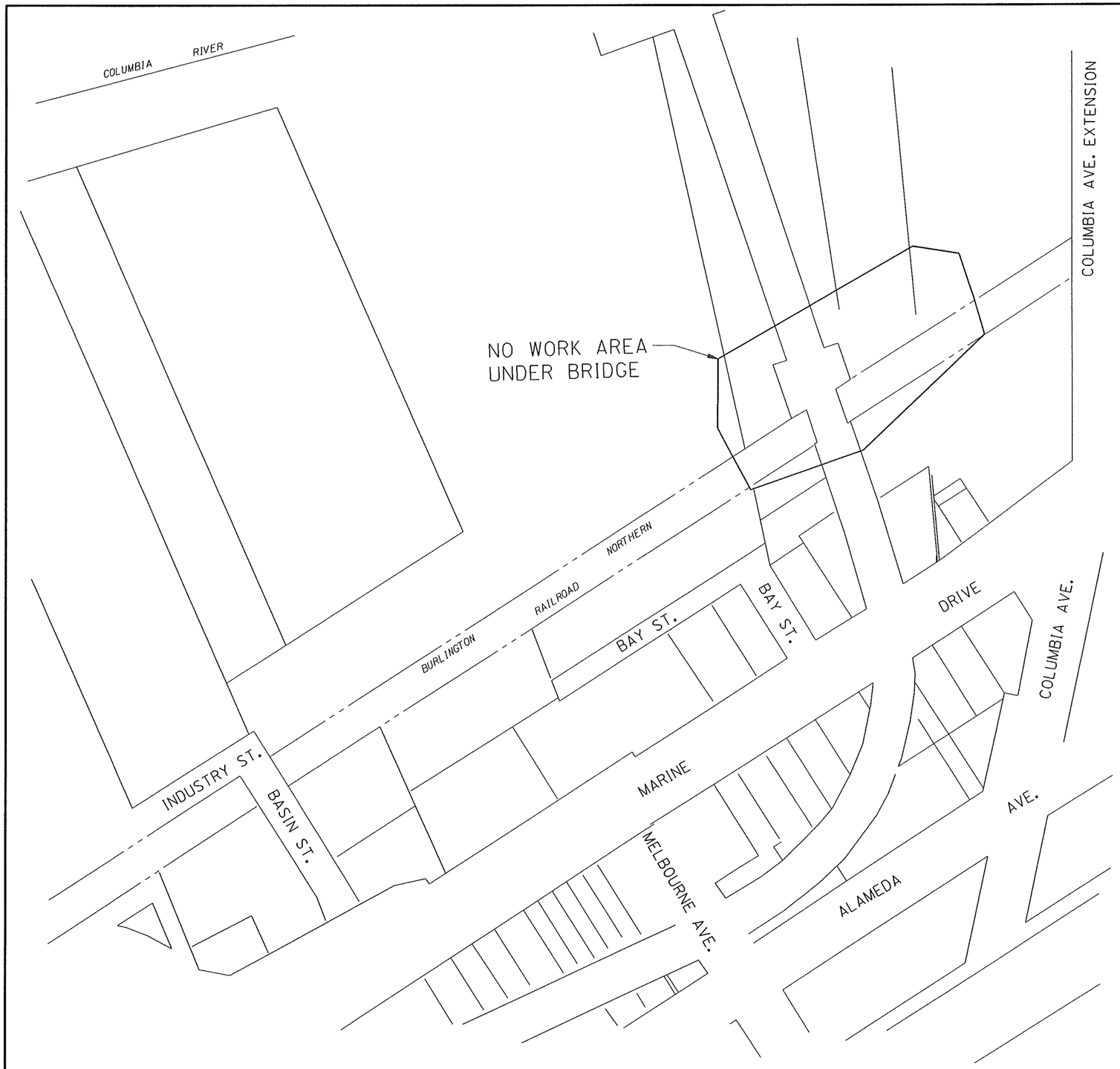

REGISTERED PROFESSIONAL ENGINEER
58,87[illegible]
OREGON
JULY 13, 2004
DARRYL D. JAMES
RENEWS: 06-30-2013

REVIEW COPY ONLY

OREGON DEPARTMENT OF TRANSPORTATION

REGION 2 TECH CENTER

US101: COLUMBIA RIVER (ASTORIA - MEGLER)
BRIDGE #07949C SECTION
OREGON COAST HIGHWAY
CLATSOP COUNTY

Design Team Leader - Edward W. Cantrell
Designed By - Janet Lundeen
Drafted By - Larry D. Garrison

DETAILS

SHEET NO. 2

WORK ITEMS:

(1) Prepare and Coat Bridge No. 07949C above the deck level except for L14, North & South gussets, see detail this sheet.

(2) Replace rivets.

(3) Retrofit and partial replace ladders, stairs, platforms including railing.

(4) Replace torsional stiffeners at L10-U10, L18-U18 North & South shown in dwg's. 00000, 54291 & 54292.

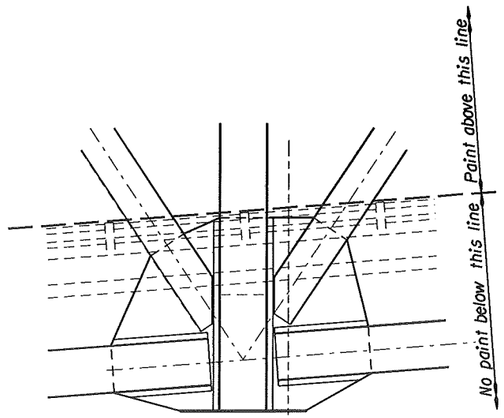

TYP. LOWER LIMIT OF PAINTING AT L14

No Scale

GENERAL NOTES:

Provide all material and perform all work according to the Oregon Standard Specifications for Construction 2008, as modified and/or extended by the Special Provisions and Supplemental Standard Specifications for this project.

Design wind speed is 100 mph.

All welding to comply with AWS D1.1, E70XX Electrode unless noted otherwise.

Drill holes in concrete with either a diamond point core drill or a carbide bit rotary hammer with four cutting edges on the diameter, as noted in Standard Specification 00535.

Provide High-Strength fasteners at structural connections according to ASTM Specification A325 galv. bolt, ASTM A563 heavy hex galv. nut & ASTM F436 galv. washer.

Paint steel according to the Special Provisions Section 00594.

Consider all bolted connections slip critical. Coating in connections shall satisfy Standard Specifications 00594.11 (e), slip coefficient 0.5.

All rods, hardware, and fabricated steel (except Stainless assembly) will be hot-dip galvanized.

Unless otherwise arranged the existing electrical service on the bridge shall not be used for construction purposes. Provide generators or other means to power any required construction equipment.

FIELD VERIFY ALL DIMENSIONS PRIOR TO FABRICATION.

CONTAINMENT:

Two (2) bays on each span may be contained at any one (1) time. Vertical, flexible material shall be stowed or removed any time the wind speed exceeds 30 MPH, during any period when the expected wind speed exceeds 30 MPH or any periods when work is stopped.

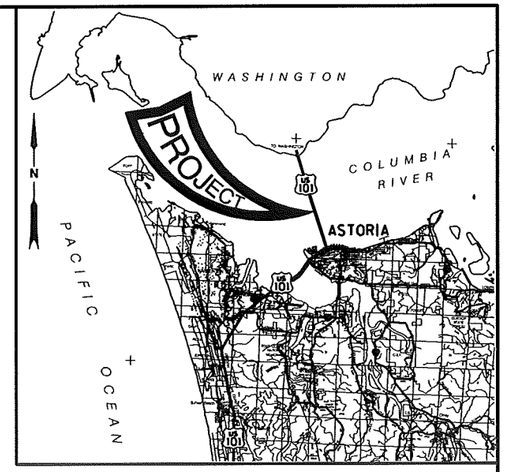

LOCATION MAP

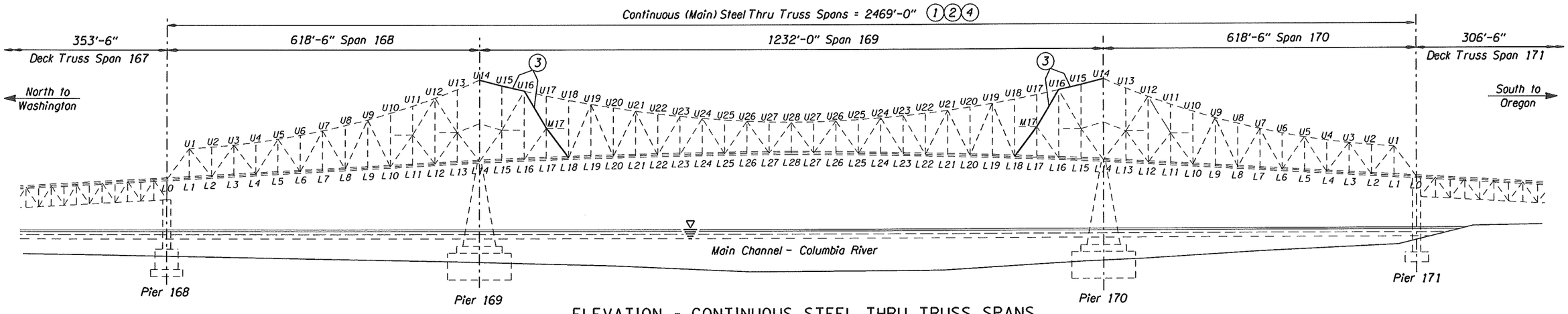

ELEVATION - CONTINUOUS STEEL THRU TRUSS SPANS

No Scale

Reference drawings of existing Columbia River, Hwy. 9 (Astoria-Megler Bridge): 17702 thru 17750, 54291 & 54292.

PRELIMINARY COPY
INFORMATION ONLY
BRIDGE ENGINEERING DESIGN UNIT

SCALE WARNING
If scale bar doesn't measure one inch then drawing is not to scale

△	DATE	REVISION	BY

ACCOMPANIED BY DWGS. 00000 thru 00000

Std. dwg's.:

DRAFTER: Tom Ohren
DESIGNER:
CHECKER: Raymond D. Bottenberg
REVIEWER: Benjamin M. Tang
RENEWS:

REGISTERED PROFESSIONAL ENGINEER OREGON MAY 12, 2009 KEVIN MILLER SMITH III
REVIEW COPY ONLY

OREGON DEPARTMENT OF TRANSPORTATION
BRIDGE ENGINEERING HEADQUARTERS
4040 Fairview Industrial Drive SE
Salem, OR 97302-1142
(503) 986-4200

STRUCTURE NO. 07949C
DATE month-year
CALC. BOOK

COLUMBIA RIVER, HWY. 9 (ASTORIA - MEGLER BR)
US101: ASTORIA - MEGLER BRIDGE PAINT PROJECT
OREGON COAST HIGHWAY (M.P. 0.00)
CLATSOP COUNTY OREGON, PACIFIC COUNTY WASHINGTON

ELEVATION, WORK ITEMS, NOTES, & LOCATION MAP

SHEET 1 OF xx

DRAWING NO. 00000

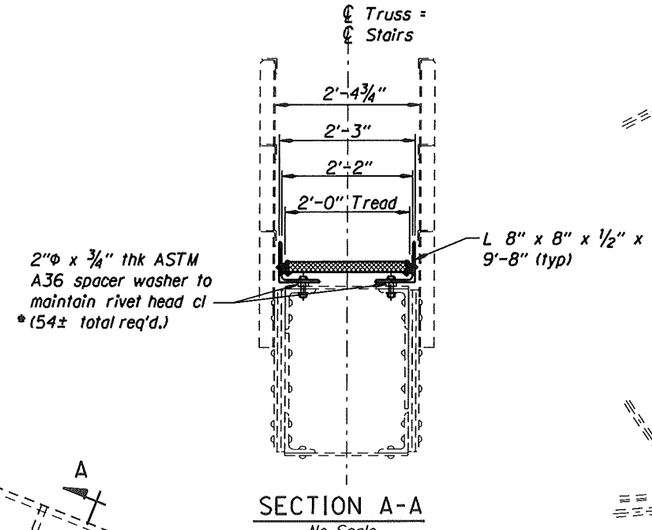

SECTION A-A
No Scale

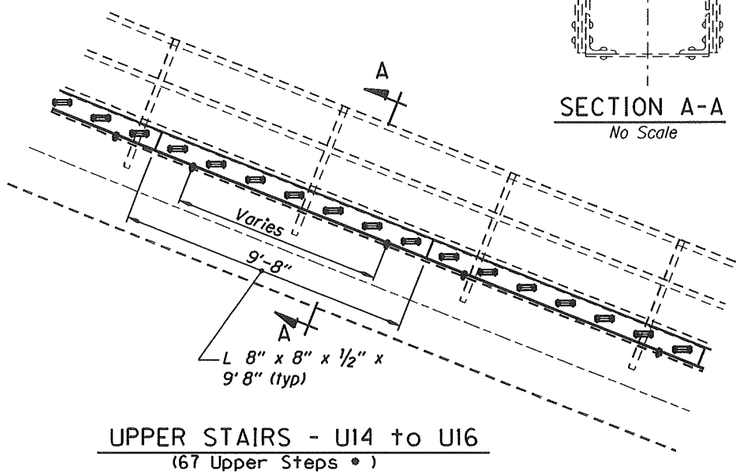

UPPER STAIRS - U14 to U16
(67 Upper Steps *)
No Scale

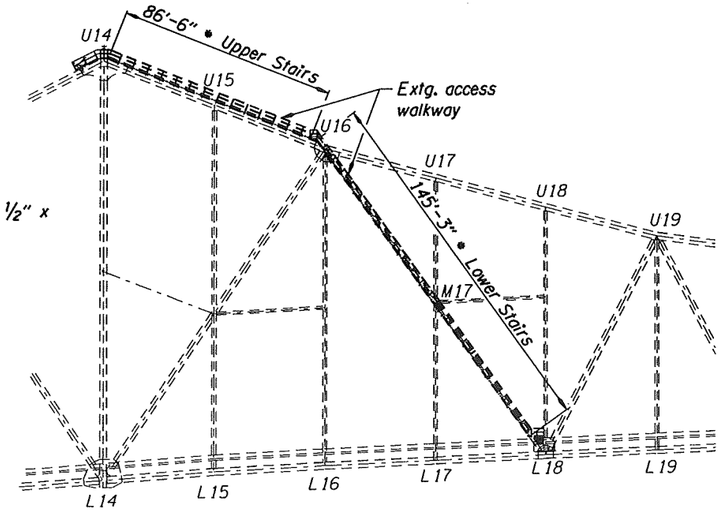

ACCESS STAIRS
Scale: 1" = 30'

NOTE:
* Field verify

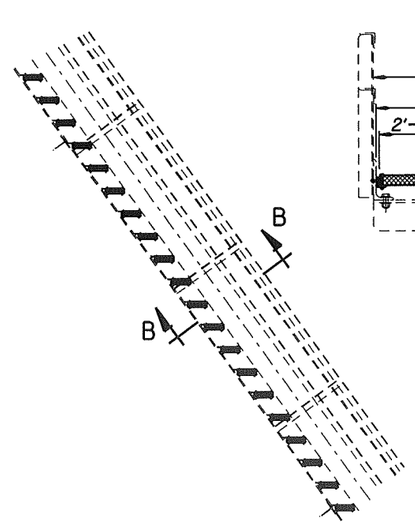

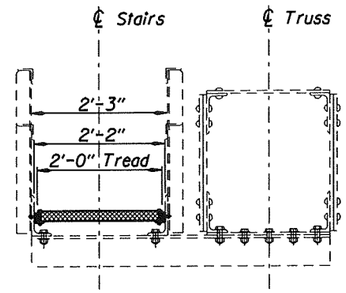

SECTION B-B
No Scale

LOWER STAIRS - U16 to L18
(152 Lower Steps *)
No Scale

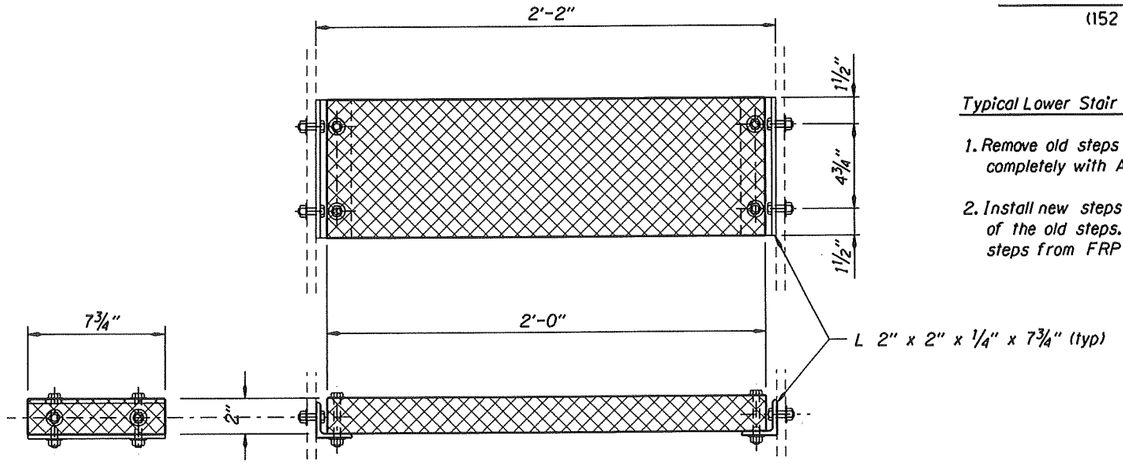

TYP. STEP DETAIL
No Scale

Typical Upper Stair Replacement Sequence:

1. *Remove old stairs by cutting attachment and grinding weld flush to 250 microinches in accordance with AWS D1.5. Inspection of finished surface by CWI required before painting. Install A325 bolt with washers in existing fastener holes in chord from old stair installation.*

2. *Galvanize all angles and fasteners. All fasteners to be A325. Fabricate steps from FRP 2" x 2" step material 2" thick. Galv. angles per ASTM A153.*

3. *Remove existing chord fasteners 4 at a time and replace with same size bolts to attach stair sections. Maintain slope of stair sections by adjusting shim thickness. Adjust location of fastener holes in longitudinal stair angles to facilitate stair installation and align with existing fastener holes in chord.*

4. *Adjust length of final stair section as required to reach top beam. Refer to Dwg. 17734 for unspecified details.*

Typical Lower Stair Step Replacement Sequence:

1. *Remove old steps by cutting and grinding or replace Ls completely with A36 Galvanize new steel.*

2. *Install new steps with ¼"-20 hex hd. screws in place of the old steps. All fasteners to be HDG A325. Fabricate steps from FRP step material 2" thick.*

PRELIMINARY COPY
INFORMATION ONLY
BRIDGE ENGINEERING
DESIGN UNIT

SCALE WARNING
If scale bar doesn't measure one inch then drawing is not to scale

△	DATE	REVISION	BY

ACCOMPANIED BY DWGS. *See sheet 1 for this structure*

DRAFTER: Tom Ohren
DESIGNER:
CHECKER: Raymond D. Bottenberg
REVIEWER: Benjamin M. Tang

REGISTERED PROFESSIONAL ENGINEER 82091PE OREGON JANUARY 12, 2009 BENJAMIN MILLER SMITH III
REVIEW COPY ONLY
RENEWS:

OREGON DEPARTMENT OF TRANSPORTATION
BRIDGE ENGINEERING HEADQUARTERS
4040 Fairview Industrial Drive SE
Salem, OR 97302-1142
(503) 986-4200

STRUCTURE NO. 07949A
DATE month-year
CALC. BOOK

COLUMBIA RIVER, HWY. 9 (ASTORIA - MEGLER BR)
US101: ASTORIA - MEGLER BRIDGE PAINT PROJECT
OREGON COAST HIGHWAY (M.P. 0.00)
CLATSOP COUNTY OREGON, PACIFIC COUNTY WASHINGTON

ACCESS STAIRS REPAIR DETAILS

SHEET x OF xx
DRAWING NO. 00000

\\wpdotclr1004\hwye93d\ODOT_DATA\projects\14183\T007949C.dgn :: Default 6/29/2011 9:56:39 AM hwye93d

1:360 - ACCESS STAIR REPAIR DETAILS

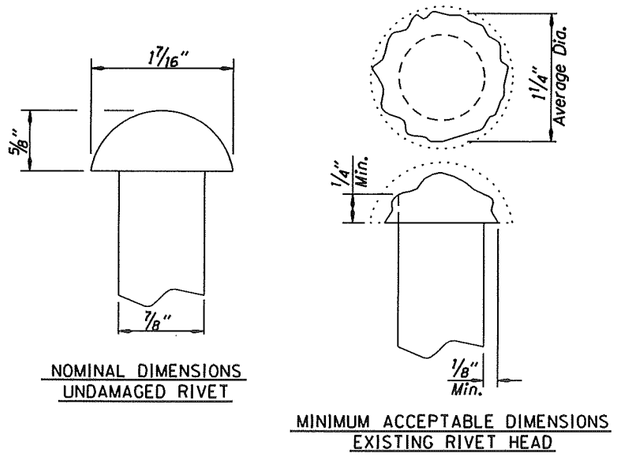

NOMINAL DIMENSIONS
UNDAMAGED RIVET

MINIMUM ACCEPTABLE DIMENSIONS
EXISTING RIVET HEAD

As directed by Engineer, rivets shall be replaced with 7/8" Φ ASTM F1852 Galv. Hex Bolt, ASTM A563 Heavy Hex Galv. Nut, ASTM F436 Galv. Washer, (and Galv. Tapered Washer as needed), installed in accordance with Special Provision 00560.29.

Rivets shall be removed by the use of a pneumatic "rivet buster" or other approved method. Do not allow removal or damage of metal from surfaces or bore of holes in structural steel members.

When rivets are removed, power tool clean surfaces and hole bores in accordance with SSPC-SP 15 (use metal wire deburring brushes or tube brushes as necessary) and apply primer in accordance with Special Provision 00594.11(e)(4) and 00594.42

RIVET REPLACEMENT WITH HEX HEAD BOLT DETAIL (REHABILITATED MEMBERS)

No Scale

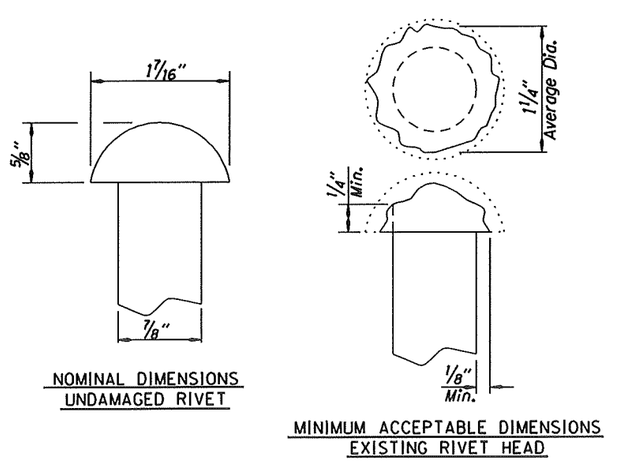

NOMINAL DIMENSIONS
UNDAMAGED RIVET

MINIMUM ACCEPTABLE DIMENSIONS
EXISTING RIVET HEAD

As directed by Engineer, rivets shall be replaced with 7/8" Φ ASTM F1852 Twist-Off round head zinc coated Bolt, ASTM A563 Heavy Hex Galv. Nut, ASTM F436 Galv. Washer, (and Galv. Tapered Washer as needed), installed in accordance with Special Provision 00560.29.

Rivets shall be removed by the use of a pneumatic "rivet buster" or other approved method. Do not allow removal or damage of metal from surfaces or bore of holes in structural steel members.

When rivets are removed, power tool clean surfaces and hole bores in accordance with SSPC-SP 15 (use metal wire deburring brushes or tube brushes as necessary) and apply primer in accordance with Special Provision 00594.11(e)(4) and 00594.42

RIVET REPLACEMENT WITH ROUND HEAD BOLT DETAIL (REHABILITATED MEMBERS)

No Scale

PRELIMINARY COPY
INFORMATION ONLY
BRIDGE ENGINEERING
DESIGN UNIT

SCALE WARNING
If scale bar doesn't measure one inch then drawing is not to scale

△	DATE	REVISION	BY

ACCOMPANIED BY DWGS. *See sheet 1 for this structure*

DRAFTER: Tom Ohren
DESIGNER:
CHECKER: Raymond D. Bottenberg
REVIEWER: Benjamin M. Tang

REGISTERED PROFESSIONAL ENGINEER 82095PE OREGON JANUARY 12, 2009 DARRIN MILLER SMITH III
RENEWS:

OREGON DEPARTMENT OF TRANSPORTATION
BRIDGE ENGINEERING HEADQUARTERS
4040 Fairview Industrial Drive SE
Salem, OR 97302-1142
(503) 986-4200

STRUCTURE NO. 07949A
DATE month-year
CALC. BOOK

COLUMBIA RIVER, HWY. 9 (ASTORIA - MEGLER BR)
US101: ASTORIA - MEGLER BRIDGE PAINT PROJECT
OREGON COAST HIGHWAY (M.P. 0.00)
CLATSOP COUNTY OREGON, PACIFIC COUNTY WASHINGTON

RIVET REPLACEMENT DETAILS

SHEET x OF xx
DRAWING NO. 00000

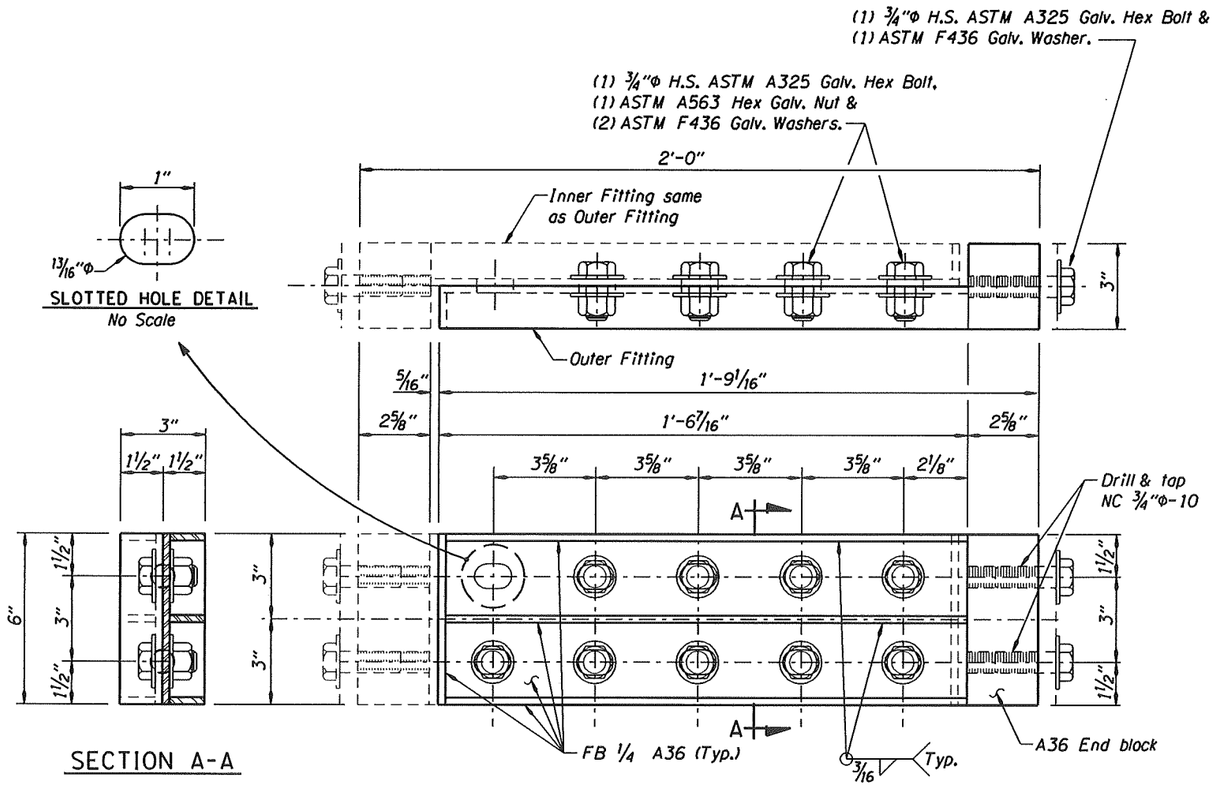

SECTION A-A

TORSIONAL STIFFENER DETAIL
Scale: 3/8" = 1'-0"

NOTES:

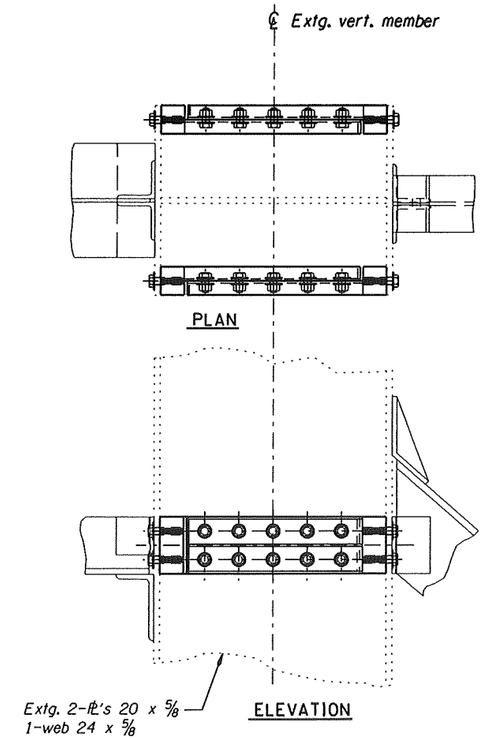

NEW TORSIONAL STIFFENER INSTALLATION
Scale: 1 1/2" = 1'-0"

NOTES:

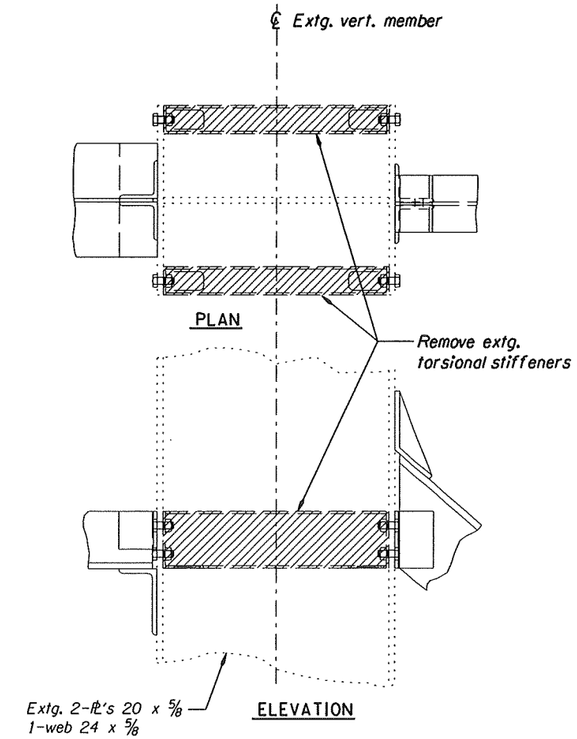

EXTG. TORSIONAL STIFFENER REMOVAL
Scale: 1 1/2" = 1'-0"

NOTES:

PRELIMINARY COPY
INFORMATION ONLY
BRIDGE ENGINEERING DESIGN UNIT

SCALE WARNING
If scale bar doesn't measure one inch then drawing is not to scale

△	DATE	REVISION	BY

ACCOMPANIED BY DWGS. *See sheet 1 for this structure*

DRAFTER: Tom Ohren
DESIGNER:
CHECKER: Raymond D. Bottenberg
REVIEWER: Benjamin M. Tang

REGISTERED PROFESSIONAL ENGINEER 82095PE OREGON JULY 12, 2009 QUENTIN MILLER SMITH III
REVIEW COPY ONLY
RENEWS:

OREGON DEPARTMENT OF TRANSPORTATION
BRIDGE ENGINEERING HEADQUARTERS
4040 Fairview Industrial Drive SE
Salem, OR 97302-1142
(503) 986-4200

STRUCTURE NO. 07949A
DATE month-year
CALC. BOOK

COLUMBIA RIVER, HWY. 9 (ASTORIA - MEGLER BR)
US101: ASTORIA - MEGLER BRIDGE PAINT PROJECT
OREGON COAST HIGHWAY (M.P. 0.00)
CLATSOP COUNTY OREGON, PACIFIC COUNTY WASHINGTON

TORSIONAL STIFFENER REPLACEMENT

SHEET x OF xx
DRAWING NO. 00000

\\wpdotclrl004\hwye93d\ODOT DATA\projects\14183\T007949C.dgn :: Default 6/29/2011 9:56:53 AM hwye93d 1:8 - TORSIONAL STIFFENER REPLACEMENT

NOTE:

(1) Replace extg. tubular steel handrails with welded 2 x 2 x 5/16 L's.

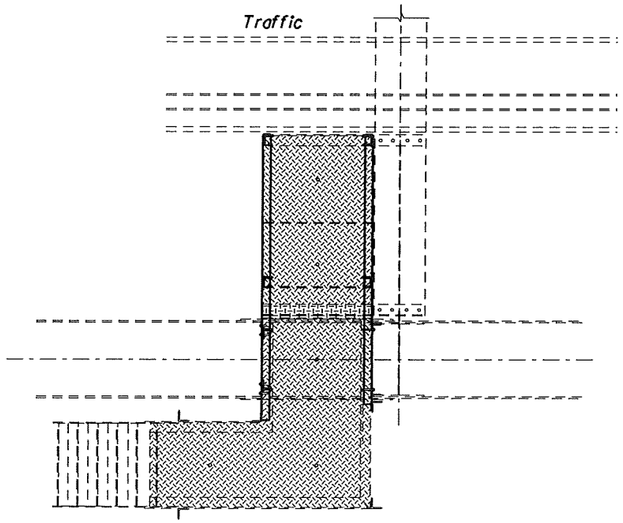

PLAN

Scale: 1/2" = 1'-0"

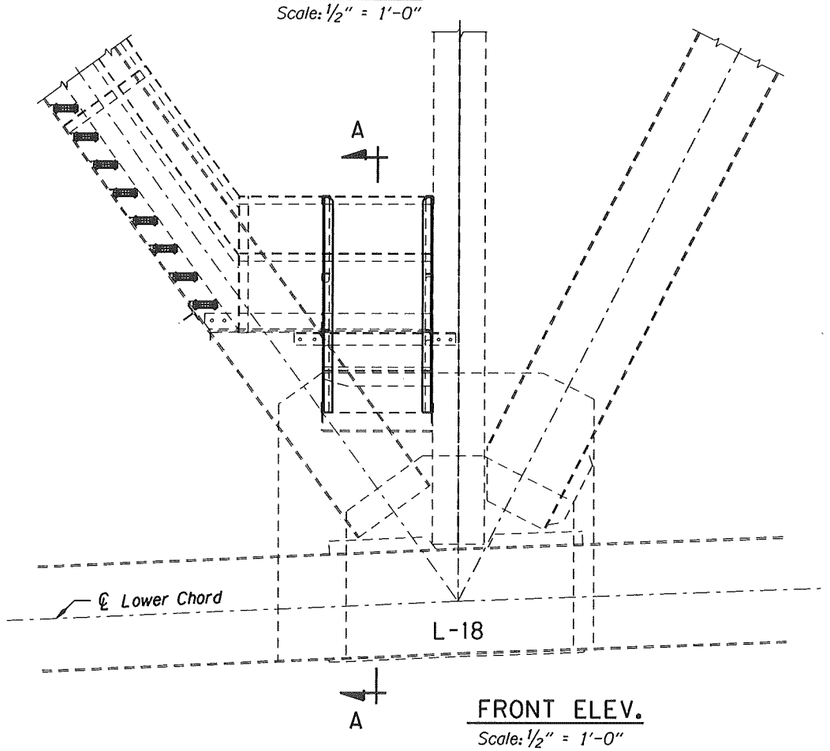

FRONT ELEV.

Scale: 1/2" = 1'-0"

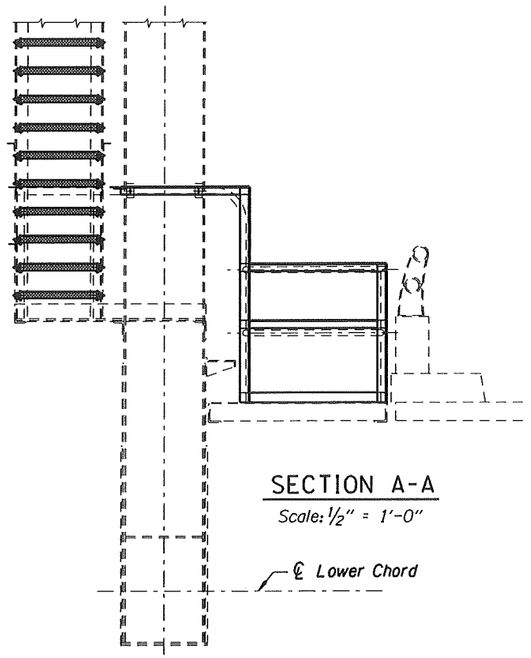

SECTION A-A

Scale: 1/2" = 1'-0"

℄ Lower Chord

PRELIMINARY COPY

INFORMATION ONLY

BRIDGE ENGINEERING DESIGN UNIT

SCALE WARNING

If scale bar doesn't measure one inch then drawing is not to scale

△	DATE	REVISION	BY

ACCOMPANIED BY DWGS. *See sheet 1 for this structure*

DRAFTER: Tom Ohren

DESIGNER:

CHECKER: Raymond D. Bottenberg

REVIEWER: Benjamin M. Tang

REGISTERED PROFESSIONAL ENGINEER 82095PE OREGON JANUARY 12, 2005 ROBIN MILLER SMITH III

RENEWS:

REVIEW COPY ONLY

OREGON DEPARTMENT OF TRANSPORTATION

BRIDGE ENGINEERING HEADQUARTERS
4040 Fairview Industrial Drive SE
Salem, OR 97302-1142
(503) 986-4200

STRUCTURE NO. 07949A

DATE *month-year*

CALC. BOOK

COLUMBIA RIVER, HWY. 9 (ASTORIA - MEGLER BR)
US101: ASTORIA - MEGLER BRIDGE PAINT PROJECT
OREGON COAST HIGHWAY (M.P. 0.00)
CLATSOP COUNTY OREGON, PACIFIC COUNTY WASHINGTON

STAIR ACCESS PLATFORM @ L18

SHEET x OF xx

DRAWING NO. 00000