CURBING

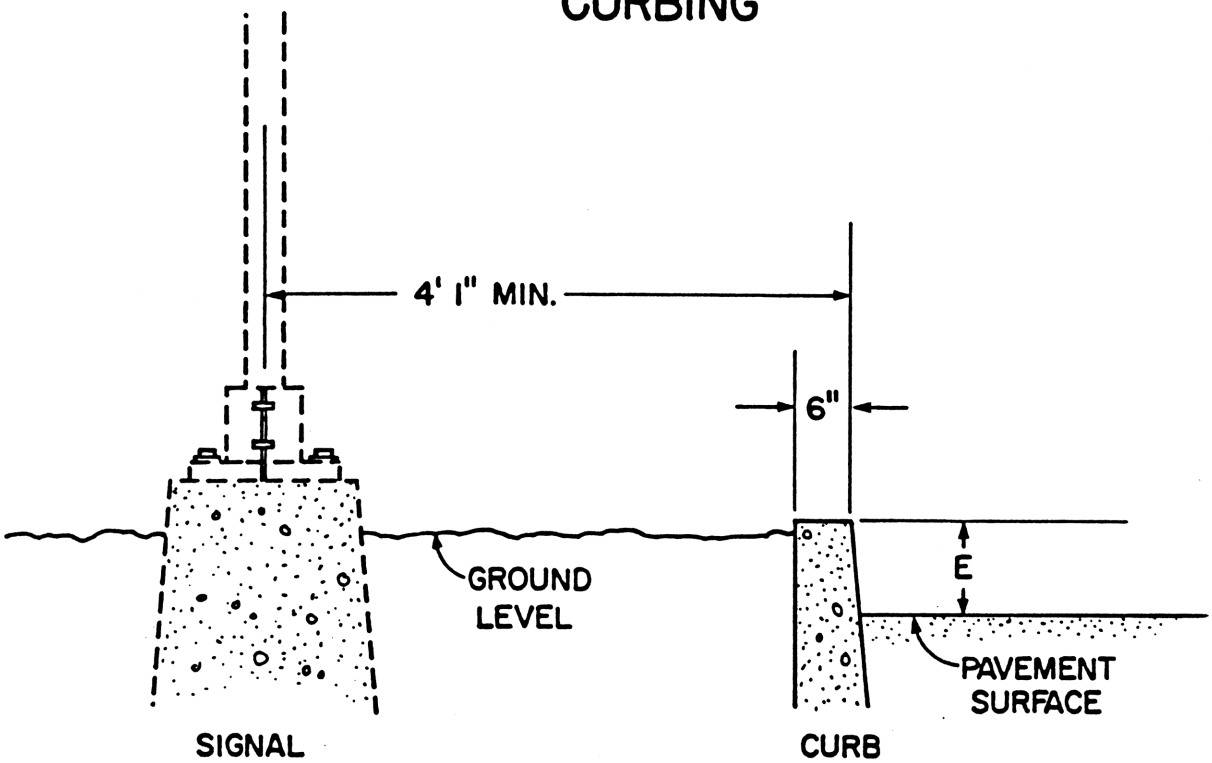

E (EXPOSURE) = 7" MIN. FOR NEW CONSTRUCTION
6" MIN. FOR EXISTING INSTALLATIONS AND FOR MAINTENANCE AFTER INITIAL INSTALLATION.

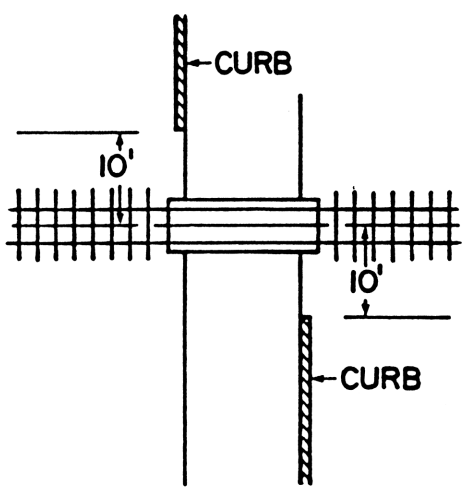

CURBING SHALL NOT BE CONSTRUCTED CLOSER THAN 10' FROM CENTERLINE OF NEAREST TRACK.

OAR 860-42-060 (7)

OAR 860-42-070

FIGURE 14