GENERAL BUILDING DATA:

ITEMS	FEET
WIDTH:	36'-0"
LENGTH:	36'-0"
EAVE HEIGHT:	14'-0" *
ROOF PITCH:	4 **
FRAME SPACING:	12'-0" ***
RAFTER SPACING:	2'-0"
GIRT SPACING:	2'-0"

DESIGN CRITERIA

ITEMS	UNIT
WIND SPEED	80 MPH (FASTEST MILE) 95 MPH (3 SEC. GUST)
EXPOSURE	B
SEISMIC ZONE	D
DEAD LOAD	5 psf
SOIL BEARING	1500 psf

GENERAL NOTES

THE GENERAL CONTRACTOR SHALL VERIFY ALL DIMENSIONS AND SITE CONDITIONS BEFORE STARTING WORK. THE OWNER/CONTRACTOR SHALL NOTIFY THE BUILDING CODE DIVISION OF ANY DESCREPENCIES. CHANGES,OMISSIONS OR SUBSTITUTIONS ARE NOT PEMITTED WITHOUT THE APPROVAL OF THE BUILDING DEPARTMENT HAVING JURISDICTION. ALL WORKMANSHIP SHALL CONFORM TO OREGON STRUCTURAL SPECIALTY CODE.

THE STRUCTURE IS DESIGNED TO FUNCTION AS A UNIT UPON COMPLETION . THE CONTRACTOR/OWNER IS RESPONSIBLE FOR MEFHODS AND/ SEQUENCES OF ASSEMBLING THE STRUCTURE. THE CONTRACTOR/OWNER IS RESPONSIBLE FOR THE STABILITY OF THE STRUCTURE DURING THE CONSTRUCTION AND PRIOR TO COMPLETION OF ALL WALLS, ROOF AND FLOOR DIAPHRAGMS

DRILLED FOUNDATION

THE FOOTING SHALL BEAR ON NATIVE, INORGANIC, UNDISTURBED NATIVE SOIL BELOW EXISTING GRADE. ALL STRUCTURAL FOOTINGS SHALL BE EXTENDED MINIMUM 4'-0" BELOW FINISHED GRADE UNLESS NOTED OTHERWISE ON PLANS. THERE SHALL BE 95% COMPACTION OF ALL BACKFILL FOR SLAB ON GRADE IN ACCORDANCE OF ASTM D1557 MODIFIED PROCTOR DENSITY.

BACK FILL IN THE ANNULAR SPACE AROUND THE POSTS SHALL BE BY ONE OF THE FOLLOWING METHODS:

A. CONCRETE WITH THE ULTIMATE STRENGTH OF MIN. 2000 PSI.
B. CLEAN SAND: THE SAND SHALL BE COMPACTED BY TAMPING IN **LAYERS NOT MORE THAN 8" IN DEPTH**
C. GRANULAR BACKFILL: THE GRANULAR BACKFILL SHALL BE 3/4 (-) GRAVEL OR CRUSHED ROCK. BACKFILL SHALL BE COMPACTED BY TAMPING IN LAYERS NOT MORE THAN 8" IN DEPTH.
D. NO SPECIAL INSPECTION FOR COMPACTION BY TAMPING

WOOD

STRUCTURAL LUMBER SHALL CONFORM TO WESTERN SOFTWOOD ASSOCIATION FOR GRADING.

-POSTS SHALL BE 6 X P.T HF#2 U.N.O
-POSTS SHALL BE PRESSURE TREATED TO 0.60 pcf RETENTION CCA ACCORDANCE WITH UBC STD 25-12 AND A.W.P.A LP-44.
-POSTS SHALL BE CENTERED ON THE FOOTING.
-GIRTS SHALL BE 2 X 6 DF#2 @ 24" O.C U.N.O
-RAFTERS SHALL BE 2 X 6 DF#2 @ 24" O.C U.N.O

FASTENERS, ANCHORS AND CONNECTORS

- BOLTS SHALL BE 3/4 DIAMETER MACHINE BOLTS WITH WASHERS AND NUTS AND SHALL CONFORM TO ASTM.
- WHERE BOLTS COME INTO CONTACT WITH PRESSURE TREATED WOOD WHEN CHEMONITE IS USED THEY SHALL BE GALVANIZED STEEL.
- NUTS FOR BOLTS SHALL BE EITHER CROWN NUTS OR NYLON LOCKNUTS AND SHALL BE TIGHTENED TO THE APPROPRIATE MANUFACTURER'S RECOMMENDATIONS.
- NAILS IN TREATED WOOD SHALL BE HOT DIPPED GALVANIZED

GIRT TO POST RAFTER TO BLOCKING BLOCKING TO TRUSS (NAILS AT EACH SIDE U.N.O)	(3) 16d

* SPECIFIED EAVE HEIGHT IS MAXIMUM HEIGHT. PLANS AND DETAILS ARE ADEQUATE FOR HEIGHTS LESS THAN 14'-0"

** SPECIFIED ROOF PITCH IS MAXIMUM. PLANS AND DETAILS ARE ADEQUATE FOR ROOF PITCH LESS THAN 4 TO 12

*** SPECIFIED FRAME SPACING IS MAXIMUM. PLANS AND DETAILS ARE ADEQUATE FOR SPACING LESS THAN 12'-0". SEE 1/S10 FOR TRUSS BRACING FOR OPENING GREATER THAN 14'-0"

BUILDING CODES DIVISION
1535 EDGEWATER STREET NW
SALEM OR 97306
P.O.BOX 14470
TEL: (503) 378-4133 FAX: (503) 378-2322

READY BUILD PLAN #2014-01
PRESCRIPTIVE POST FRAME BUILDING
36'-0" X36'-0"x 14'-0"
WIND: 95 MPH EXPOSURE "B"
SNOW: 30 PSF

BUILDING CODE: OSSC: 2010

Sheet: S01

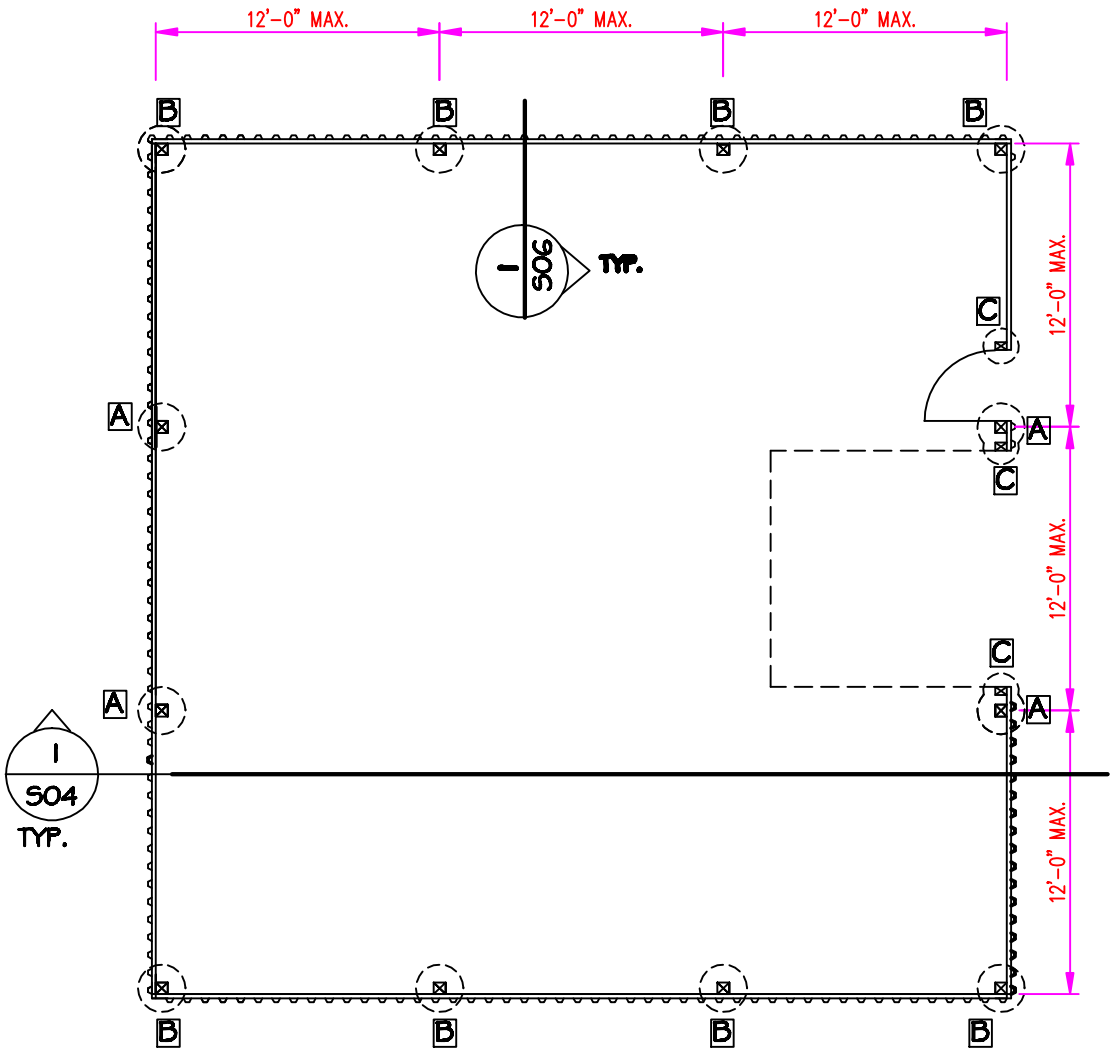

POST	POST SIZE	HOLE DIA (IN)	HOLE DEPTH (IN)	REMARKS
A	P.T 6X6 HF#2	24	54	SEE DETAIL 2/S09
B	P.T 6X6 HF#2	24	54	SEE DETAIL 2/S09
C	P.T 4X6 HF#2	18	42	SEE DETAIL 2/S09

1 / S02 FOUNDATION/ FLOOR PLAN

BUILDING CODES DIVISION
1535 EDGEWATER STREET NW
SALEM OR 97306
P.O.BOX 14470
TEL: (503) 378-4133 FAX: (503) 378-2322

READY BUILD PLAN #2014-01
PRESCRIPTIVE POST FRAME BUILDING
36'-0" X36'-0"x 14'-0"
WIND: 95 MPH EXPOSURE "B"
SNOW: 30 PSF

BUILDING CODE: OSSC: 2010

Sheet: S02

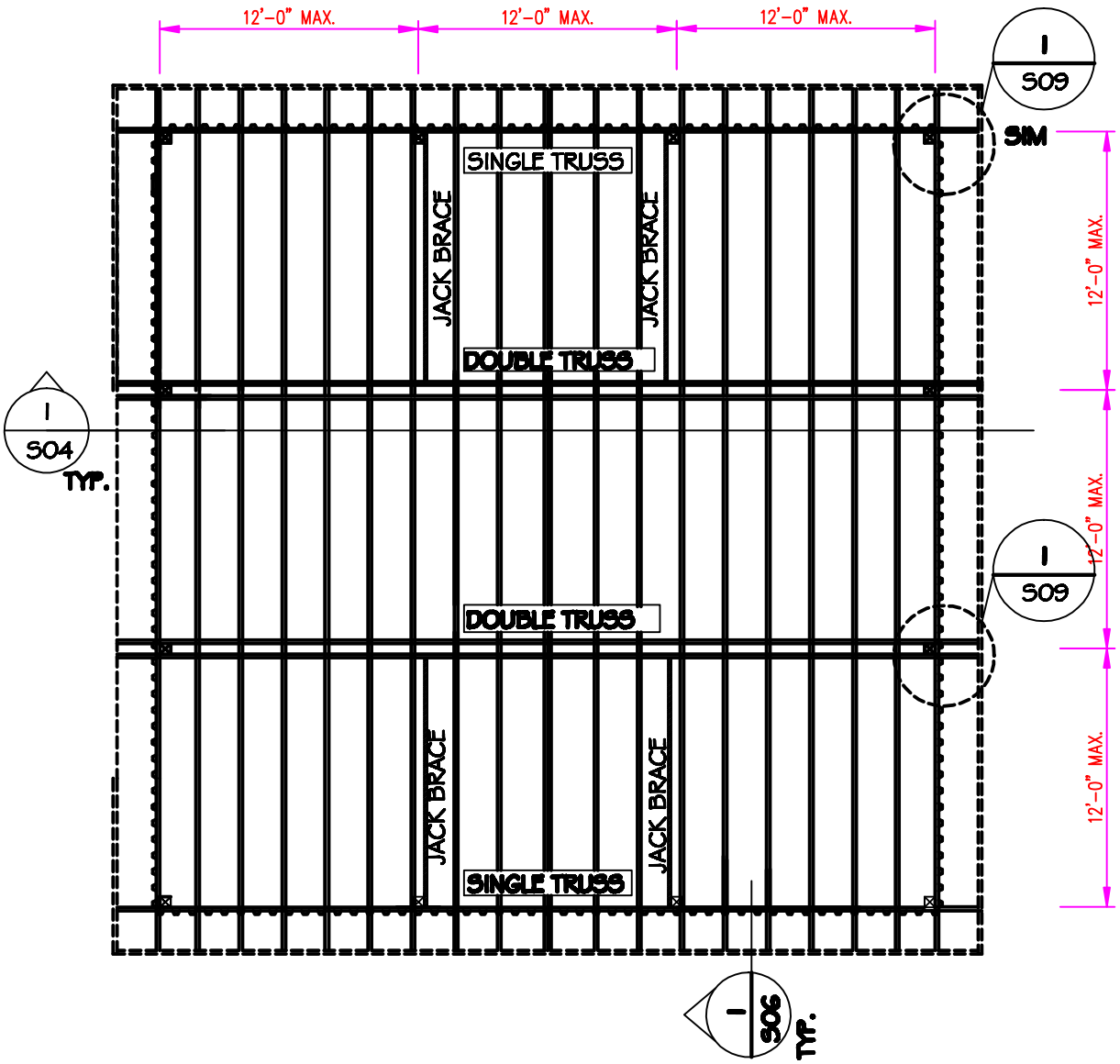

PLAN NOTES:

1. 2X6 DF#2 @ 24" O.C TYPICAL RAFTERS
2. 7/16" OSB W/8d@6" O.C EDGES AND 12" O.C FIELD (OPTIONAL)
3. 15# FELT
4. 29 GAGE METAL ROOF SHEATHING PER S10
5. MAX. 2'-0" OVERHANG (OPTIONAL)

1 / S02 ROOF FRAMING FLAN

BUILDING CODES DIVISION
1535 EDGEWATER STREET NW
SALEM OR 97306
P.O.BOX 14470
TEL: (503) 378-4133 FAX: (503) 378-2322

READY BUILD PLAN #2014-01
PRESCRIPTIVE POST FRAME BUILDING
36'-0" X36'-0"x 14'-0"
WIND: 95 MPH EXPOSURE "B"
SNOW: 30 PSF

BUILDING CODE: OSSC: 2010

Sheet: S03

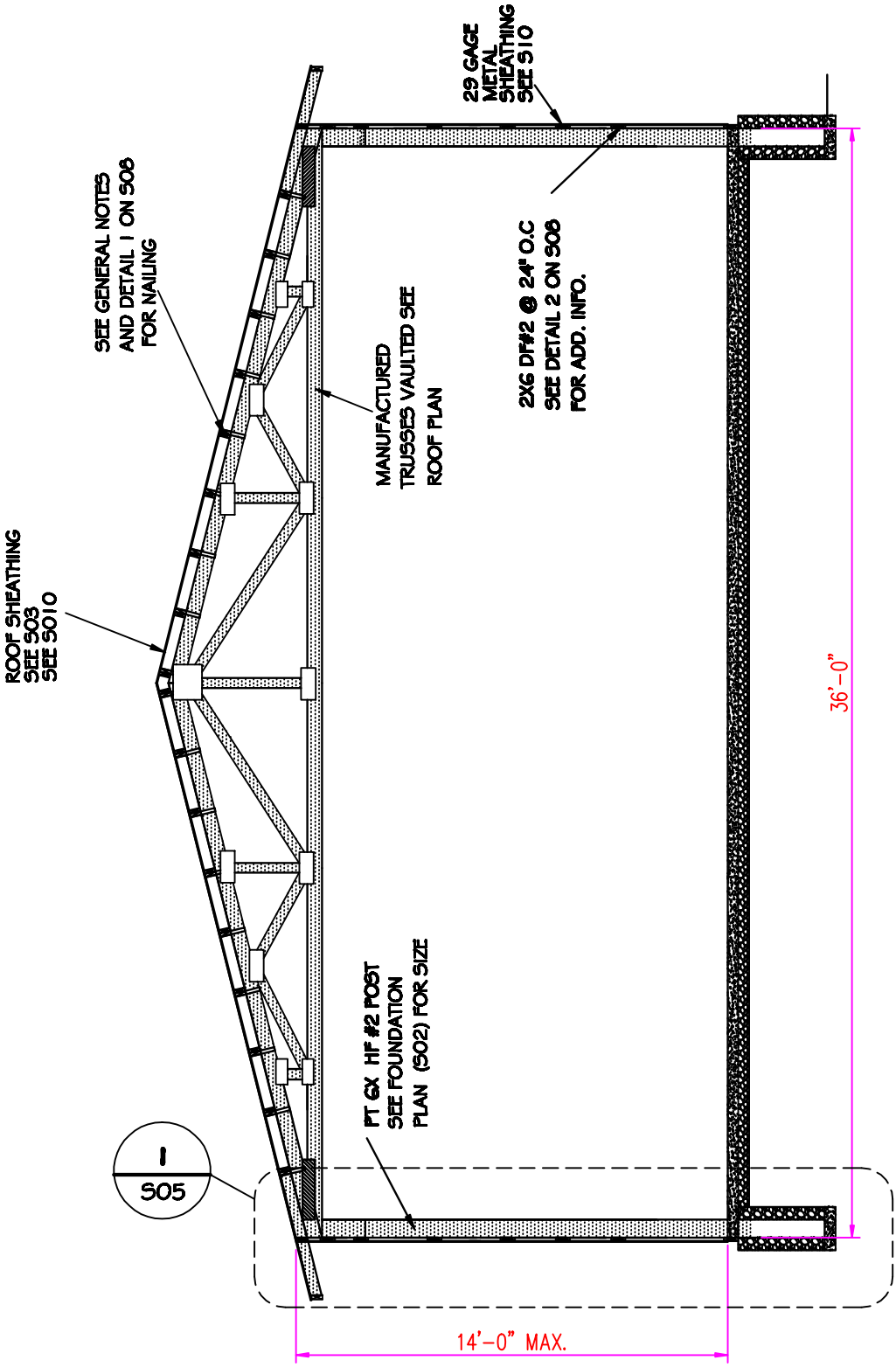

1 / S04 TYPICAL BUILDING SECTION

BUILDING CODES DIVISION
1535 EDGEWATER STREET NW
SALEM OR 97306
P.O.BOX 14470
TEL: (503) 378-4133 FAX: (503) 378-2322

READY BUILD PLAN #2014-01
PRESCRIPTIVE POST FRAME BUILDING
36'-0" X36'-0"x 14'-0"
WIND: 95 MPH EXPOSURE "B"
SNOW: 30 PSF

BUILDING CODE: OSSC: 2010

Sheet: S04

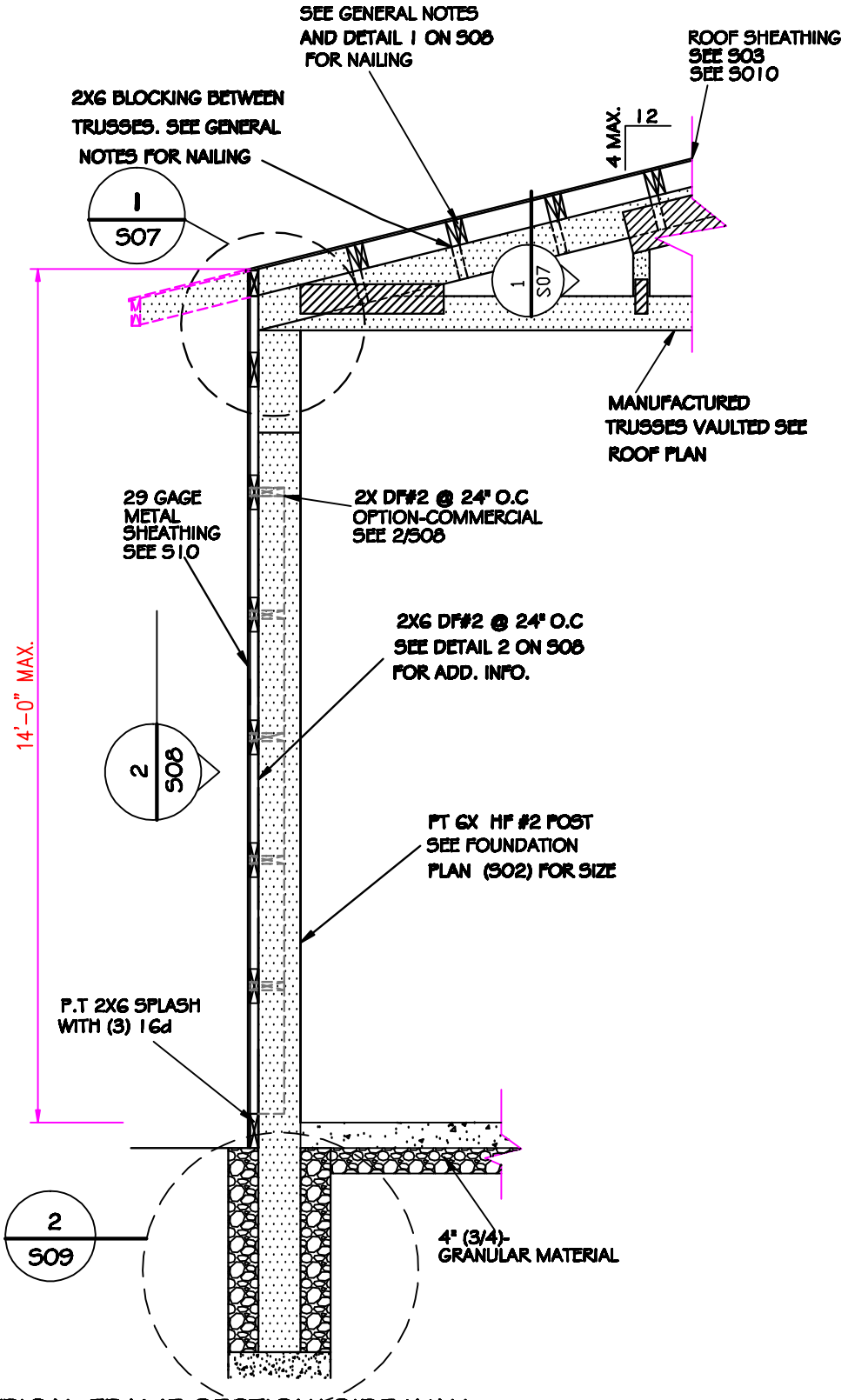

1
S05

TYPICAL FRAME SECTION/ SIDE WALL

N.T.S

BUILDING CODES DIVISION
1535 EDGEWATER STREET NW
SALEM OR 97306
P.O.BOX 14470
TEL: (503) 378-4133 FAX: (503) 378-2322

READY BUILD PLAN #2014-01
PRESCRIPTIVE POST FRAME BUILDING
36'-0" X36'-0"x 14'-0"
WIND: 95 MPH EXPOSURE "B"
SNOW: 30 PSF

BUILDING CODE:
OSSC: 2010

Sheet:
S05

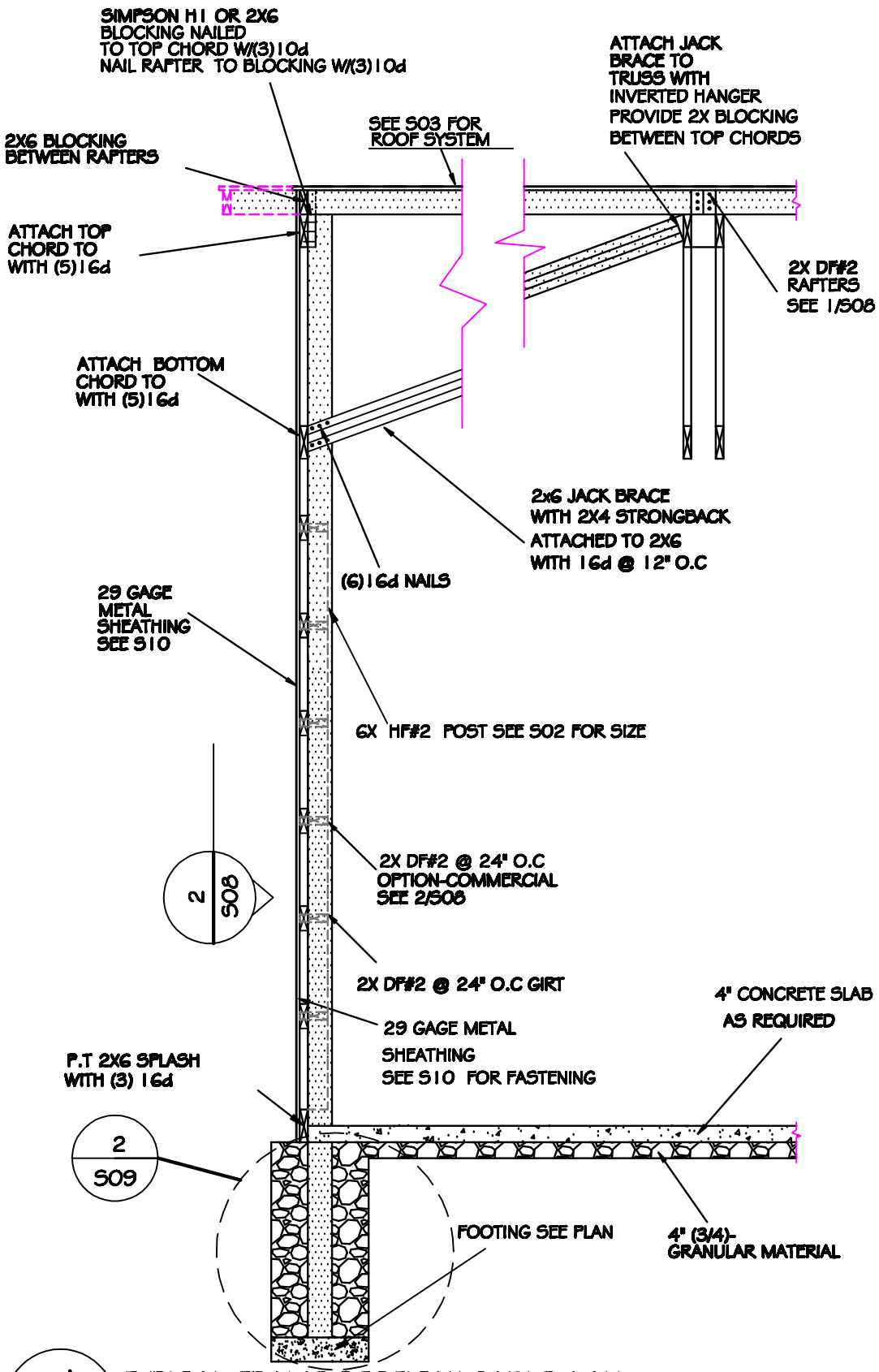

1 / S06 TYPICAL FRAME SECTION/ GABLE WALL

N.T.S

BUILDING CODES DIVISION
1535 EDGEWATER STREET NW
SALEM OR 97306
P.O.BOX 14470
TEL: (503) 378-4133 FAX: (503) 378-2322

READY BUILD PLAN #2014-01
PRESCRIPTIVE POST FRAME BUILDING
36'-0" X36'-0"x 14'-0"
WIND: 95 MPH EXPOSURE "B"
SNOW: 30 PSF

BUILDING CODE: OSSC: 2010

Sheet: S06

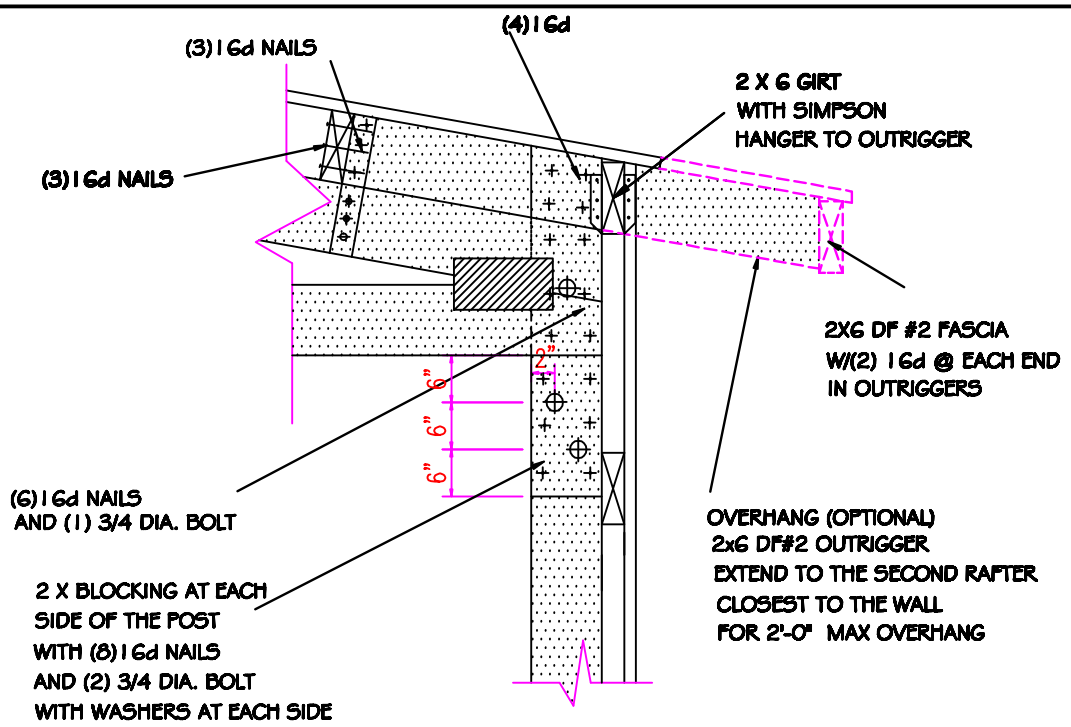

1/S07 TRUSS TO POST CONNECTION DETAIL

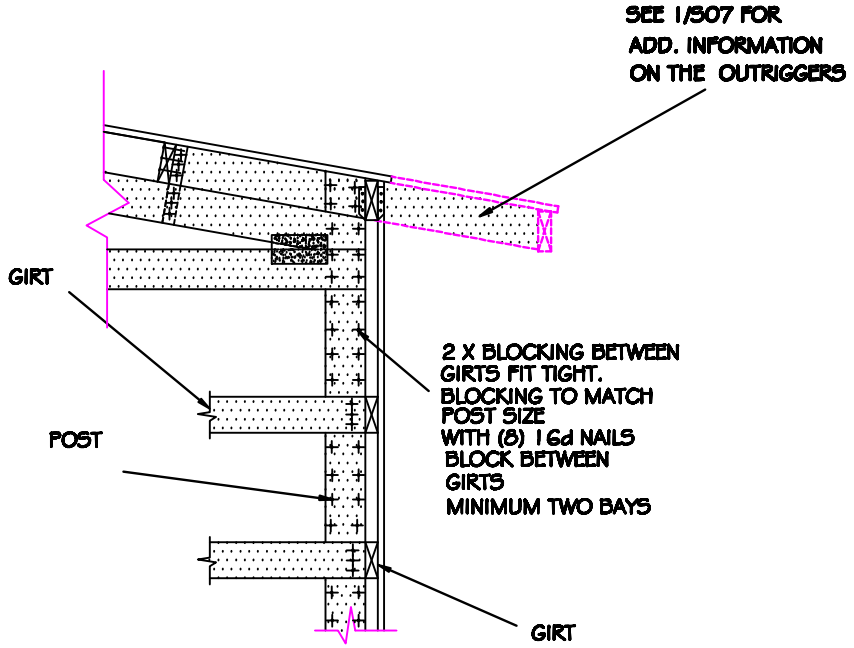

2/S07 GABLE END WALL TRUSS CONNECTION

BUILDING CODES DIVISION
1535 EDGEWATER STREET NW
SALEM OR 97306
P.O.BOX 14470
TEL: (503) 378-4133 FAX: (503) 378-2322

READY BUILD PLAN #2014-01
PRESCRIPTIVE POST FRAME BUILDING
36'-0" X36'-0"x 14'-0"
WIND: 95 MPH EXPOSURE "B"
SNOW: 30 PSF

BUILDING CODE: OSSC: 2010

Sheet: S07

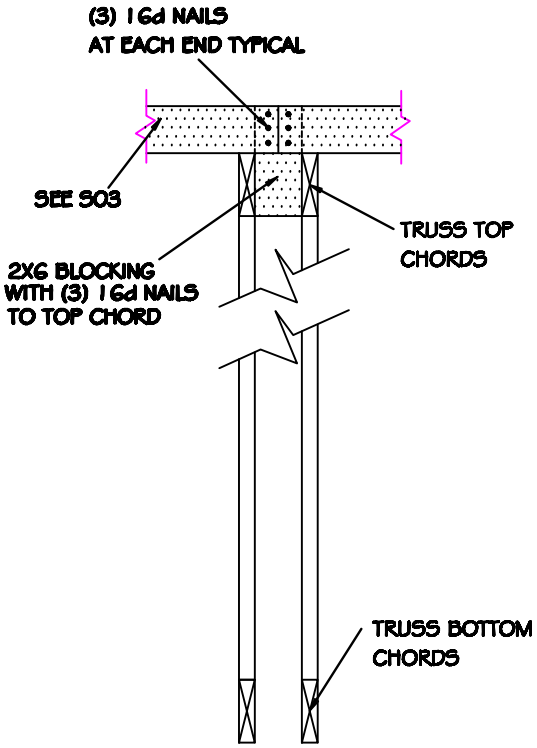

1 / S08 TYPICAL PURLIN TO TRUSS CONNECTION DETAIL

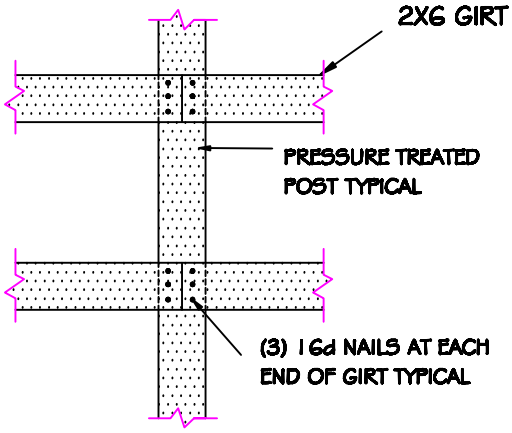

OPTION WITH COMMERCIAL GIRT

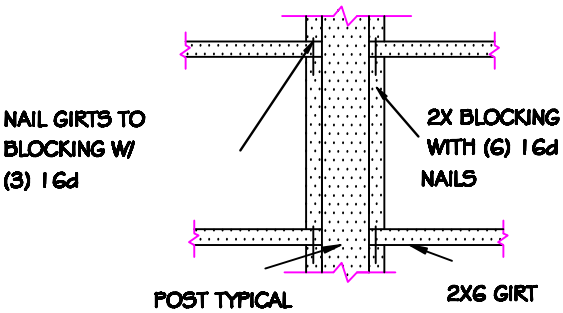

2 / S08 GIRT TO POST CONNECTION DETAIL

BUILDING CODES DIVISION
1535 EDGEWATER STREET NW
SALEM OR 97306
P.O.BOX 14470
TEL: (503) 378-4133 FAX: (503) 378-2322

READY BUILD PLAN #2014-01
PRESCRIPTIVE POST FRAME BUILDING
36'-0" X36'-0"x 14'-0"
WIND: 95 MPH EXPOSURE "B"
SNOW: 30 PSF

BUILDING CODE: OSSC: 2010

Sheet: S08

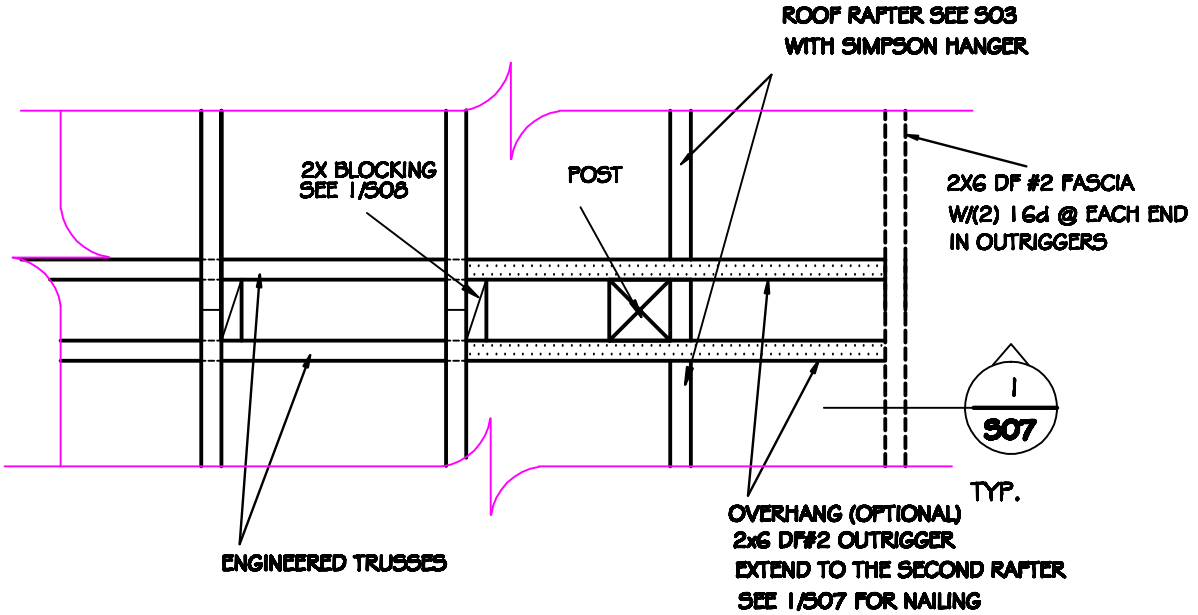

1 S09 OUTRIGGER/OVERHANG DETAIL

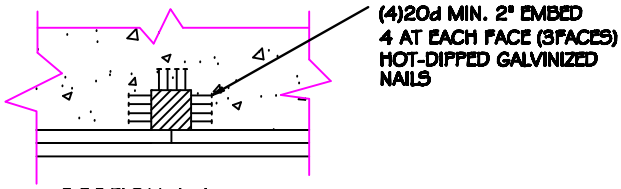

SECTION A-A

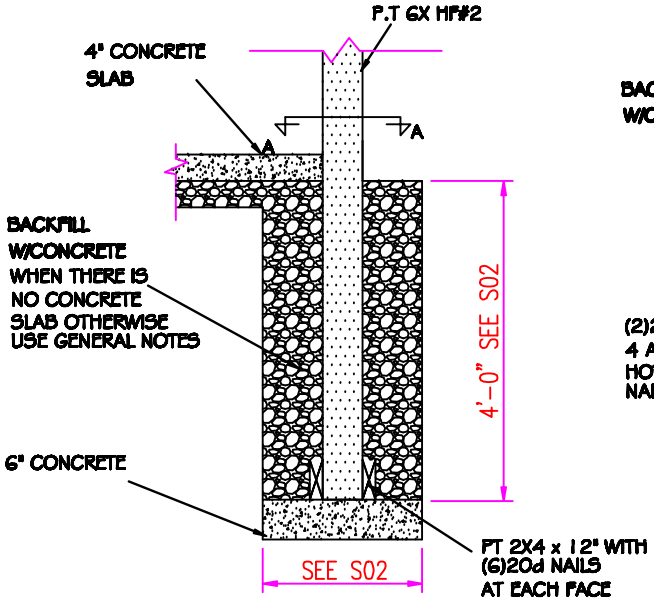

OPTION 1: WITH SLAB

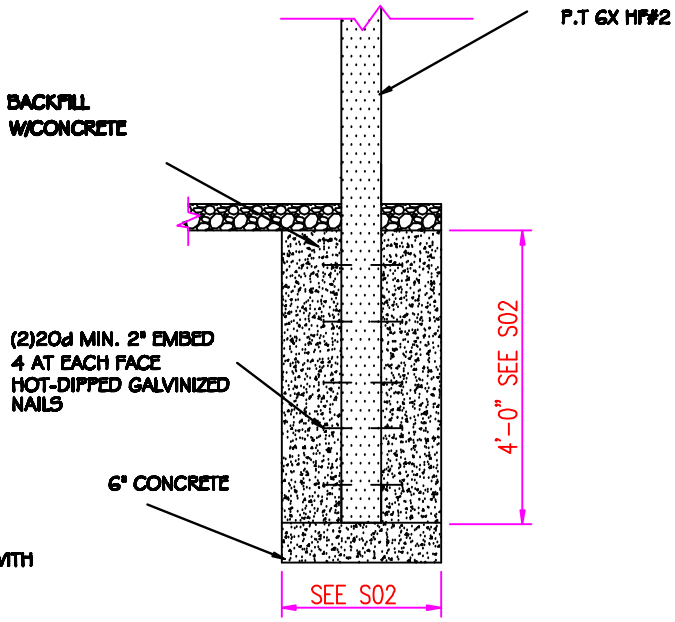

OPTION 2: WITHOUT SLAB

2 S09 FOUNDATION DETAIL

BUILDING CODES DIVISION
1535 EDGEWATER STREET NW
SALEM OR 97306
P.O.BOX 14470
TEL: (503) 378-4133 FAX: (503) 378-2322

READY BUILD PLAN #2014-01
PRESCRIPTIVE POST FRAME BUILDING
36'-0" X36'-0"x 14'-0"
WIND: 95 MPH EXPOSURE "B"
SNOW: 30 PSF

BUILDING CODE: OSSC: 2010

Sheet: S09

NOTES

1. ALL ROOF AND SIDE, AND GABLE WALL METAL SHEATHING SHALL BE MINIMUM 29 GAGE WITH RIP PATTERN AT 9" INTERVALS FASTEN METAL SHEATHING TO EACH GIRT AND PURLIN AS SHOWN BELOW OR ACCORDING TO THE MANUFACTURERES RECOMMENDATIONS WHICHEVER IS MORE RESTRICTIVE.
2. BLOCKING IS REQUIRED BETWEEN GIRTS AND PURLINGS IN ORDER TO COMLY WITH SCREW SPACING AT CORNERS AND OPNINGS,
3. STICH SCREWS MAY BE USED ON SEAM RIB IF DESIRED OR OTHERWISE REQUIRED BY DESIGN (SEE PLANS), BUT NOT NECESSARY IF WALL AND ROOF PANEL LAPS ARE PLACED IN THE DIRECTION OF PREVAILING WIND.

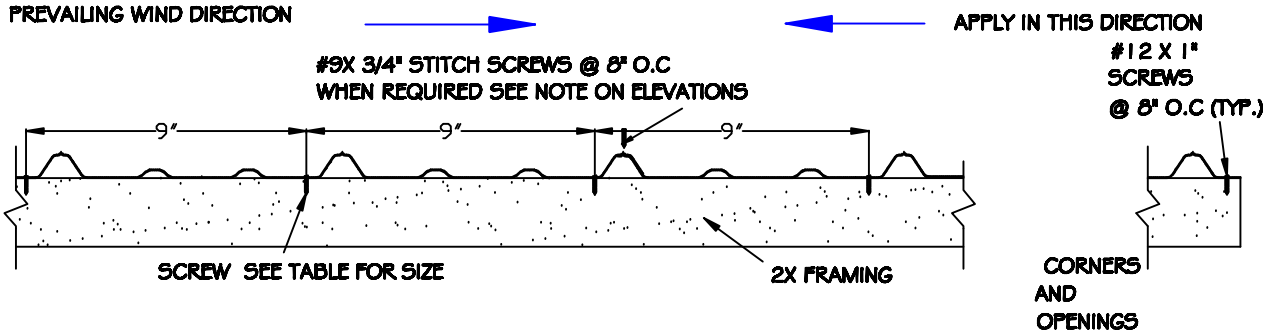

ROOF INTERMEDIATE PURLINS	# 12 X 1" @ 9" O.C
SIDE WALLL INTERMEDIATE GIRTS	# 12 X 1" @ 9" O.C
GABLE WALLL INTERMEDIATE GIRTS	# 12 X 1" @ 9" O.C

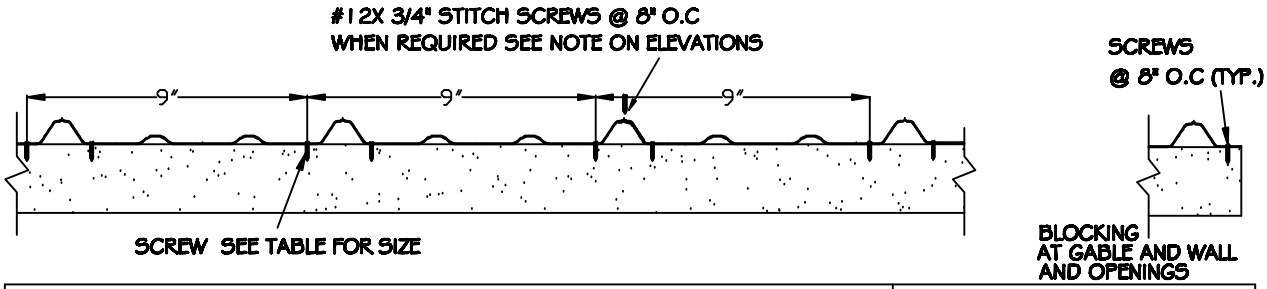

SIDE WALL EAVE AND SPLASH BOARD	# 12 X 1-1/2"
GABLE WALL TRUSS TOP CHORD AND SPLASH BOARD	# 12 X 1-1/2"
RIDGE	# 12 X 1-1/2"

1 / S10 WALL AND ROOF SHEATHING FASTENING DETAIL

BUILDING CODES DIVISION
1535 EDGEWATER STREET NW
SALEM OR 97306
P.O.BOX 14470
TEL: (503) 378-4133 FAX: (503) 378-2322

READY BUILD PLAN #2014-01
PRESCRIPTIVE POST FRAME BUILDING
36'-0" X36'-0"x 14'-0"
WIND: 95 MPH EXPOSURE "B"
SNOW: 30 PSF

BUILDING CODE: OSSC: 2010

Sheet: S10

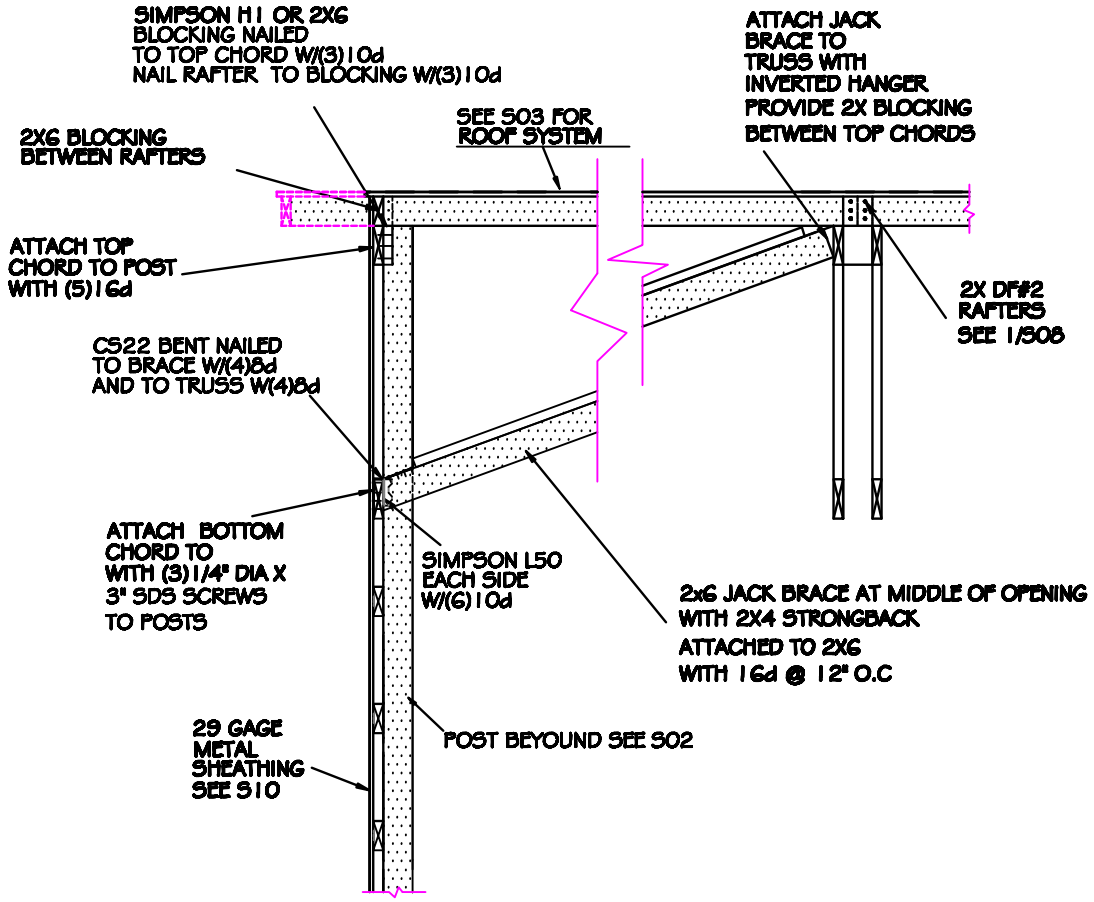

1
S11 GABLE TRUSS OUT OF PLANE BRACING

BUILDING CODES DIVISION
1535 EDGEWATER STREET NW
SALEM OR 97306
P.O.BOX 14470
TEL: (503) 378-4133 FAX: (503) 378-2322

READY BUILD PLAN #2014-01
PRESCRIPTIVE POST FRAME BUILDING
36'-0" X36'-0"x 14'-0"
WIND: 95 MPH EXPOSURE "B"
SNOW: 30 PSF

BUILDING CODE:
OSSC: 2010

Sheet:
S11

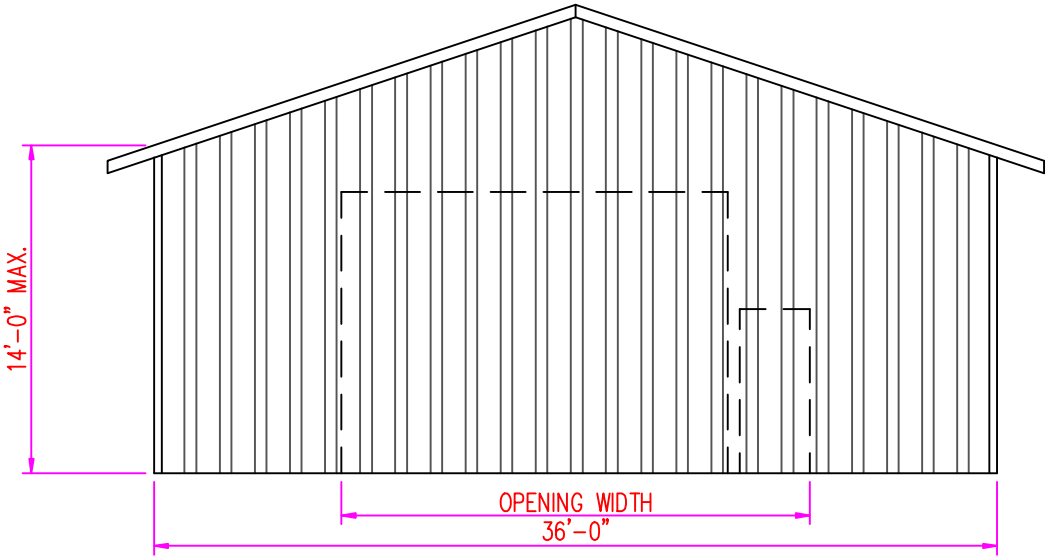

1 S12 GABLE ELEVATION

PLAN NOTES:

1. MAXIMUM OPENING WIDTH IS 20'-0"
2. SEE 1/S11 FOR TRUSS BOTTOM CHORD BRACING FOR OPENING GREATER THAN 14'-0"
3. STITCH WALL PER S10 WHEN OPENING IS EQUAL OR GREATER THAN 16'-0"

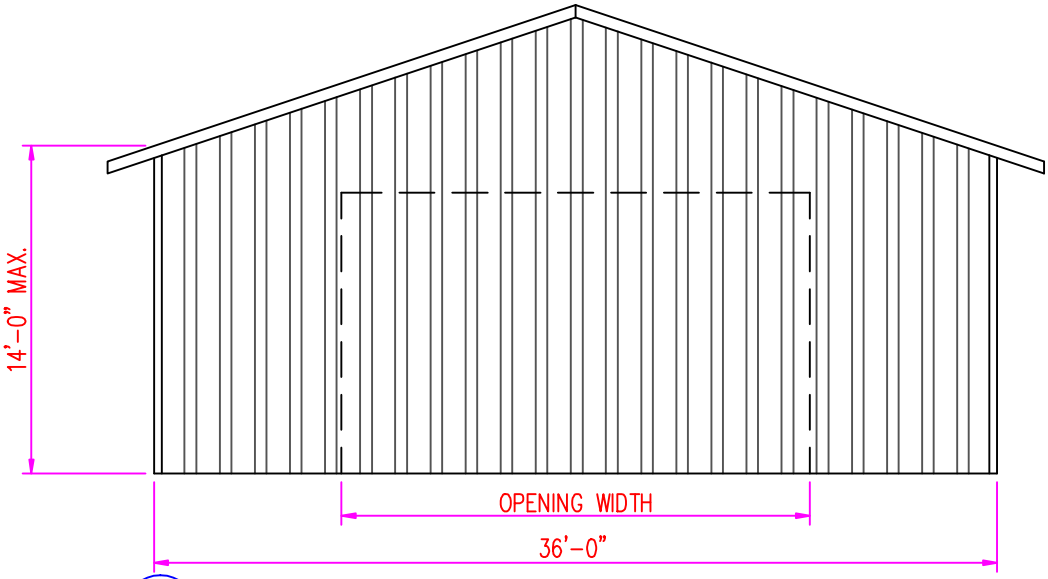

2 S12 GABLE ELEVATION

BUILDING CODES DIVISION
1535 EDGEWATER STREET NW
SALEM OR 97306
P.O.BOX 14470
TEL: (503) 378-4133 FAX: (503) 378-2322

READY BUILD PLAN #2014-01
PRESCRIPTIVE POST FRAME BUILDING
36'-0" X36'-0"x 14'-0"
WIND: 95 MPH EXPOSURE "B"
SNOW: 30 PSF

BUILDING CODE: OSSC: 2010

Sheet: S12

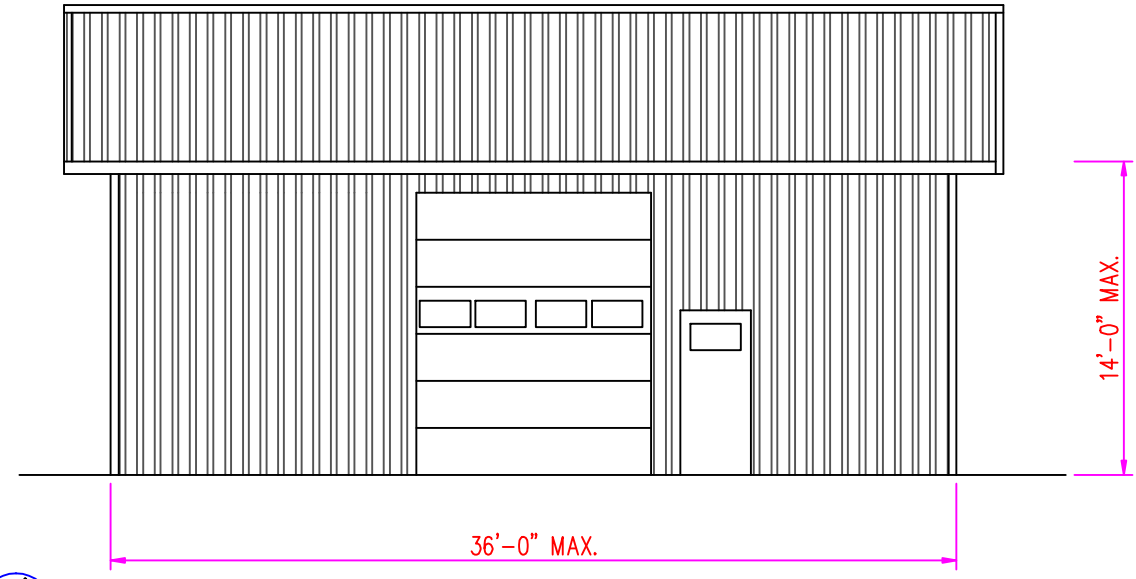

1 / S13 SIDE/EAVE ELEVATION

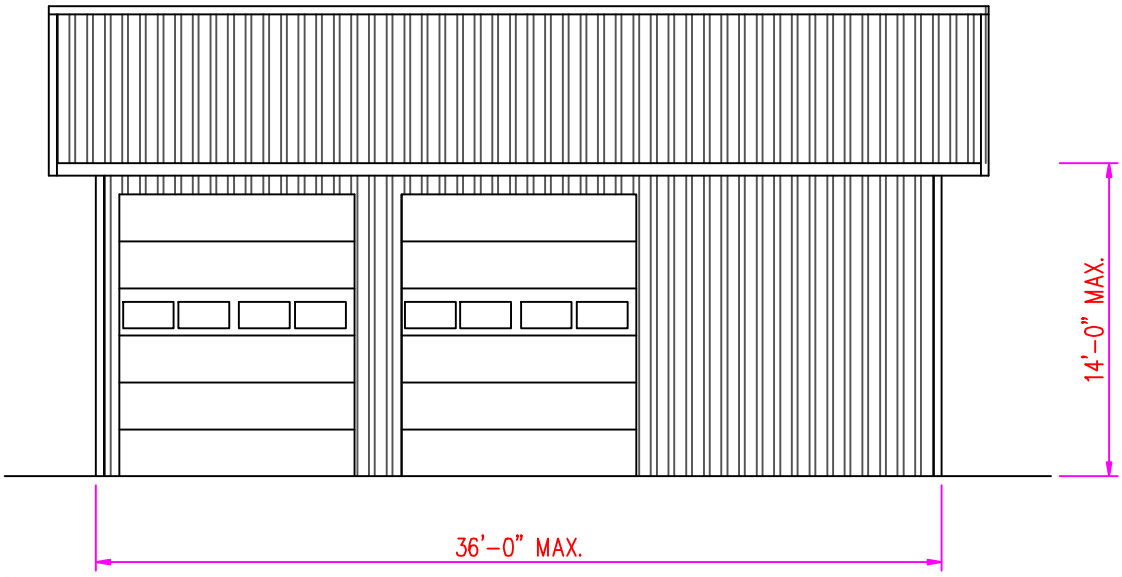

2 / S13 SIDE/EAVE ELEVATION

PLAN NOTES:

1. MINIMUM 12'-0" SOLID WALL
2. (2) 10'-0" WIDE OVERHEAD DOORS OR (1)10'-0" WIDE OVERHEAD DOOR AND 1 MAN DOOR CAN BE PLACED IN THE EAVE WALL
3. STITCH WALL PER S10 WHEN THE SOLID WALL IS 12'-0"

BUILDING CODES DIVISION
1535 EDGEWATER STREET NW
SALEM OR 97306
P.O.BOX 14470
TEL: (503) 378-4133 FAX: (503) 378-2322

READY BUILD PLAN #2014-01
PRESCRIPTIVE POST FRAME BUILDING
36'-0" X36'-0"x 14'-0"
WIND: 95 MPH EXPOSURE "B"
SNOW: 30 PSF

BUILDING CODE: OSSC: 2010

Sheet: S13