WORK PLAN

DEQ Removal Action Order: OERS # 2018-0553

July 12, 2018

Prepared for

NW Metals
7600 NE Killingsworth
Portland, OR 97218

FHA Holdings, LLC
155 B Avenue, Suite 222
Lake Oswego, Oregon 97034

Prepared by

AKANA

6400 SE Lake Road, Suite 270
Portland, OR 97222

PREPARED BY:

7/12/2018

Terry Y. Hosaka, PMP
Project Manager

Date

7/12/2018

K. Brent Hamil, RG
Project Geologist

Date

Expires: June 30, 2019

Table of Contents

1.0 Introduction 1

2.0 Remedial Action Objectives 1

3.0 Site Description 2

3.1 Site Post-Fire Activity Update 3

4.0 Scope of Work 3

4.1 Task 1: Sampling and Analysis Plan 3

4.2 Drilling and Monitoring Well Installation 7

4.3 Task 2: Material Management Plan 13

4.4 Task 3: Analytical Data Analysis 15

4.5 Task 4: Final Removal Action Report 15

5.0 Project Personnel, Roles, and Subcontractors 16

5.1 Project Team 16

5.2 Subcontractor Support 16

Limitations 16

References 17

FIGURES

Figure 1 Project Location Map
Figure 2 NW Metals Site Plan
Figure 3 NW Metals Removal Plan
Figure 4 Off-Site Sampling Plan
Figure 5 Stormwater Conveyance Plan
Figure 6 Monitoring Well Detail

TABLES

Table 1 List of Analytical Methods per Matrix
Table 2 List of Method Detection Limits and DEQ Ecological Screening Level Values

APPENDICES

Appendix A Site-Specific Health and Safety Plan
Appendix B Quality Assurance Project Plan

1.0 Introduction

On March 12, 2018, a fire involving a car shredder, salvage vehicles stockpiled for scrap metal recovery, and other related materials occurred at the Northwest Metals Inc. ("NW Metals") facility located at 7600 NE Killingsworth Street in Portland, Oregon [Figure 1]. Portland Fire and Rescue responded to the scene and established command and control of the facility during the response stage of the fire. Fire suppression activity was completed on March 13, 2018. A large car shredder, associated rubber conveyor belt, vehicle husks, tires, plastics, and other materials were burned in the fire. Fire affected areas of the site are shown on Figure 3. The fire-affected area included neighboring properties located to the west, consisting of one duplex and two single family homes. A significant amount of fire suppression water and foam were applied by the City of Portland Fire Department, Port of Portland Fire Department and potentially other fire departments responding to the incident. DEQ has asserted that hazardous substances may have been mobilized and released due to the fire and as a result of fire suppression water and foam applied at the site. As described further below, the Oregon Department of Environmental Quality ("DEQ") issued a March 28, 2018, Removal Action Order (OERS # 2018-0553) (hereafter, "RAO") to NW Metals and the property owner, FHA Holdings, LLC ("FHA"), requiring certain environmental investigation and management of material on the NW Metals facility.

Consistent with the RAO, this work plan, which is submitted on behalf of both NW Metals and FHA, describes the characterization and management of remaining on-site materials affected by the fire, analysis of potential hazardous substances both in fire residue material and soil, disposition of contaminated media as necessary, removal of the fire-damaged car shredder, and recycling of burned vehicle shells and other recyclable materials. The work plan also describes sampling and analysis procedures for off-site residential properties which sustained fire damage; and describes the procedures to inspect and analyze potential impacts to the existing stormwater system and potential impacts to subsurface soils and groundwater below two Underground Injection Control (UIC) drywells (DW1 and DW2) associated with the stormwater system.

2.0 Remedial Action Objectives

During a teleconference on April 16, 2018, DEQ agreed to amend certain RAO requirements and timelines. These changes include: 1) consenting to the recycling of burned car husks, 2) management and movement of materials on site to facilitate access for debris removal and sampling, and 3) delay of off-site residential soil sampling until access issues can be resolved. Consistent with these agreed changes, Remedial Action Objectives (RAO) listed in the order and applicable to this work plan are described below:

1) Prepare a work plan which describes how NW Metals will sort and segregate materials involved in the fire for proper characterization and disposal or recycling. This work plan and subsequent Removal Action Report (Section 4.4) will meet the requirements of the RAO.

2) On-site and off-site surficial soil characterization. This work plan will address the RAO to characterize on-site and off-site surficial soil.

3) Dry-Well (UIC), Subsurface Soil and Groundwater Assessment. This work plan proposes an iterative approach to assess potential impacts to subsurface soil and groundwater from the existing stormwater system.

3.0 Site Description

The site is located in the northeast section of Portland in a mixed-use zoning area consisting of commercial, industrial and residential properties. Specifically, the site is located within the northeast ¼ of Section 20, Township 1 North, Range 2 East of the Willamette Meridian.

The site is bordered to the east by Sunbelt Equipment Rentals, to the south by a currently vacant/undeveloped parcel of land (former quarry and potential landfill), to the west by residential properties, and to the north by NE Killingsworth Street across which are located a mix of commercial and industrial use properties (Figure 2).

Based on the U.S. Geological Survey Mount Tabor, Oregon-Washington 7.5 Minute Quadrangle the site is located at an elevation of approximately 110 feet above mean sea level (msl). Topographic maps of the area indicate that properties located immediately to the east and south of the site were part of a previous sand and gravel mining operation during the 1960's through the 1990's. Regional topography of the area is generally flat with a regional slope to the north towards the Columbia River. The gradient at the site slopes gently to the south, possibly a remnant of previous mining operations in the area.

Geology beneath the site and surrounding area consists of eroded and terraced deposits of unconsolidated gravel, sand, sandy gravel, silt and clay with clasts of Columbia River Basalt representing high-energy, sub-fluvial deposition during catastrophic floods caused by repeated failure of the glacial ice dam that impounded glacial Lake Missoula. In places, boulders up to 10-feet in diameter may be present (Trimble, 1963). A review of area well logs indicates that these deposits extend to depths in excess of 400 feet below ground surface (bgs).

Information regarding groundwater use in the immediate area is limited. There are no records indicating water wells located on the site or surrounding properties. A review of well logs maintained by the Oregon Water Resource Department (OWRD) indicates that groundwater in the area is encountered at depths of between approximately 50 and 150 feet bgs. Based on local topography, groundwater in the area is inferred to flow to the north towards the Columbia River.

3.1 – Site Post-Fire Activity Update

Limited activity has occurred on the NW Metals property since the cessation of the March 12-13, 2018, firefighting activity. Portions of the site, not affected by the fire are being used to continue vehicle/scrap metal recycling operations. Vehicles purchased at auction for recycling are processed through the NW Metals facility. Processed vehicles are then stored outside and sized reduced using heavy equipment (front end loaders). Vehicles are then placed onto flatbed truck trailers and hauled off-site for recycling. NW Metals also utilized portions of the Sunbelt property to temporarily store used vehicles purchased at auction intended for resale; by early July most of these vehicles had been resold, and the remaining few were moved to the NW Metals lot. To date no vehicles which were burned or moved as part of fire-fighting activity have been relocated or processed.

On May 22, 2018, NW Metals personnel observed the Portland Fire Department responding to an incident at the residential properties (to the west of the NW Metals Facility) which were burned in the original fire. A crew (not identified) was observed creating piles of debris composed of remaining materials from the burned buildings and potentially other material. The crew lit the debris piles on fire, prompting neighbors to call the Fire Department. Portland Fire responded to the call and extinguished the debris pile fires. The May 22, 2018 fire, and related or additional demolition activities on the residential properties may have impacted soils which are the subject of the investigation work described in this work plan.

4.0 Scope of Work

Based on the RAO, Akana has elected to break the project down into four (4) separate tasks. A description of each task follows:

4.1 — Task 1: Sampling and Analysis Plan

This section provides a brief description of the proposed plan and rationale for the sampling and analyses of the identified material types likely present at the site. As noted, sampling and analysis of the shredder unit and car husks is not proposed or planned at this time because these are to be recycled as scrap metal.

Shredder Unit – due to its size and weight, the shredder unit will be disassembled in-place by NW Metals personnel and subsequently recycled offsite. No sampling or analysis of the shredder unit is proposed.

Car Husks – as referenced previously, a number of car husks (previously slated for shredding) were burned in the fire. Many of the burned car husks were moved from fire affected areas to assist Portland Fire & Rescue personnel in gaining access to remaining fire hot spots. Upon delivery and installation of a replacement shredder unit, all burned car husks will be shredded with the recovered material transported off-site for recycling. No sampling or analysis of car husks is planned or proposed. Recycling records will be assembled and submitted to DEQ once all affected materials have been recycled.

Debris Layer – Materials present in a potential "debris layer" may consist of a mixture of fire ash, soil, and fine granular burned material in addition to small auto body parts and fragments. The location and overall thickness of the debris layer is not known but is estimated to be between 2- and 6-inches thick. According to NW Metals personnel, the debris layer in Areas A and B is underlain by a concrete slab and/or metal plates. Akana is proposing that debris recovered from over the concrete slab or metal plates be collected in accordance with the methodology outlined in this work plan and temporarily stored on-site in 55-gallon drums pending characterization and disposal or recycling as appropriate. Inert materials such as gravels, plastic, and auto body parts present within the debris material will be segregated from soils and granular debris for subsequent disposal or recycling as appropriate. The debris layer material will be collected for sampling in 55-gallon drums, which shall be composited together for purposes of obtaining one representative sample. . The sample will be collected using a stainless steel trowel and stored in a clean, covered stainless steel mixing bowl. The representative sample will be submitted to the laboratory for TCLP – Hazardous Waste Profile analysis as specified by selected disposal facility.

Surficial Soils On-Site – As outlined in the RAO, surficial soils consist of unpaved portions of the site potentially affected by fire suppression runoff or soot deposition. Due to the presence of stockpiled car husks and (reported) concrete slab and metal plates, the aerial extent, existence, and accessibility of this material is not currently known. Once the stockpiled car husks and overlying debris materials have been moved to allow access, each area will be visually inspected and the presence/absence of a concrete slab or metal plates will be documented. Concrete will be visually inspected for the presence of cracks or voids. If the concrete slab is documented to be intact, no sampling will occur in that area. The metal plates will be inspected for cracks, gaps, and voids. Surficial soil samples will be collected from accessible openings and composited to represent exposed soil areas.

For each area (A, B, C, D) listed in Figure 3, a grid sampling pattern will be established for the exposed soil area. One composite sample comprised of 10-15 individual soil samples will be homogenized and submitted for laboratory analyses. Each discrete sample collection point will be photographed and included on a figure in the final report. Surface soil samples will be collected from 0-0.25 feet below ground surface. Soil samples will be collected using a trowel, shovel, or equivalent. Soil present within cracks or voids in the concrete slab will be included as part of the composite sampling scheme.

Surficial Soils Off-Site – As referenced previously, an incident involving a response by Portland Fire & Rescue occurred at the residential properties located to the east on May, 22, 2018 resulting in the additional application of water and fire suppression chemicals. These firefighting activities likely resulted in additional impacts to the near-surface residential soils. To the extent feasible, as identified by visual examination and in discussion with DEQ personnel, these areas will not be sampled.

Akana is assuming that near-surface soil impacts on the neighboring residential properties are relatively homogenous based on firefighting activities and surface water runoff. A random grid sampling pattern will be established along the west side of the neighboring residential properties and adjacent to the site (Figure 4). For property 1, which is the larger of the two and located to the south, the grid pattern will consist of 10-foot by 10-foot grid squares. If any of the grid squares contain debris piles related to the site activity observed on May 22, 2018 or other items not related to the original fire they will not be sampled. Fifteen sample grids will be selected randomly and one soil sample will be collected from each grid. For property 2, the area available for sampling is significantly smaller. A grid pattern will be developed on-site with input from DEQ. Up to 15 soil samples will be collected using the grid pattern. For both properties, each discrete sample location will be photographed and included on a figure in the final report. Soil samples will be collected using a stainless steel trowel, shovel, of equivalent. Soil samples will be collected from 0-0.25 feet below ground surface. Discrete samples for each respective site will be composited using a stainless steel mixing bowl. One composite sample for each property will be submitted to the laboratory for analysis.

In accordance with the RAO, representative, composite samples of both on-site and off-site surficial soils will be analyzed for the following parameters:

- Semi-volatile organic compounds (SVOCs)
- Diesel-Range Total Petroleum Hydrocarbons (NWTPH-Dx)
- Priority Pollutant Metals (PPM-13) as Total Metals
- Polychlorinated Biphenyls (PCBs)
- Dioxin/Furans
- Perfluorinated Compounds (PFCs)

All samples will be retained in laboratory-supplied containers and placed in a cooler with ice. Samples will be transported under chain-of-custody protocol to ESC Lab Sciences in Tennessee for analyses.

UIC Investigation – Investigation related to the UIC system includes: 1) one composite sample of the combined sediment from inside the two known UICs (DW1 and DW2), 2) sampling of native soils from beneath the base of DW1 and DW2 and 3) sampling of groundwater in the area beneath DW1 and DW2.

Water recently observed in on-site drywell DW1 is not considered to be representative of groundwater conditions beneath the site, but rather is more indicative of perched water inside the UIC chamber which has collected due to sediment-clogging (which has inhibited water infiltration). Based on the inferred depth of groundwater in the area, greater than 50 feet bgs, Akana proposes that any groundwater investigation conducted in connection with the UIC system be delayed pending results and analyses from the UIC sediment sampling program. A discussion of groundwater sampling (if warranted), is provided below.

The UIC sediment investigation will be conducted by 3 Kings Environmental, Inc. (3 Kings) in consultation with Akana. 3 Kings will uncover and expose drywells DW1 and DW2 and attempt to locate sedimentation manhole SMH01. The layout of the stormwater conveyance and UIC system is shown on Figure 5. All soil located over these features will be side-cast for later use as backfill material, and will not be assessed for clean fill standards per Oregon DEQ unless directed otherwise.

Once each drywell (DW1 and DW2) has been located and opened, 3 Kings will mobilize a Super Sucker vacuum truck onto the subject site to dewater the each UIC to gain access to sediments for sampling. If sediment is observed after dewatering is complete, a discrete sediment samples will be collected from each UIC. The sediment samples will be collected either by hand or by using a direct-push hydraulic drilling rig (i.e., GeoProbe). Sampling will involve advancing a continuous-core soil boring to a depth of up to 25 feet through the approximate center bottom of each drywell. Sediment samples for VOA analysis will be collected using method 5035, all other samples will be collected using a hand trowel and or auger. A 3 Kings geologist will document field conditions on an exploratory boring log, including boring location, borehole logging, field observations and field screening data associated with potential impacts to soil. Field screening activities may include use of a Photo Ionization Detector (PID), visual or olfactory evidence or sheen test. Manhole covers will be sealed when replaced to reduce stormwater infiltration into the system. Collected sediment and soil samples will be analyzed for Volatile Organic Compounds (VOCs), Semi-Volatile Organic Compounds (SVOCs), Northwest Total Petroleum Hydrocarbon-Diesel extended (TPH-Dx), Priority Pollutant Metals (PPM) for 13 metals as both Total and Synthetic Precipitation Leaching Procedure (SPLP), Poly Chlorinated Biphenyls (PCBs), Dioxins/Furans, and Perfluorinated Compounds (PFCs).

To collect soil and perched groundwater samples below each UIC, two boreholes (BH1 and BH2) will also be advanced immediately north of drywells DW1 and DW2, respectively. Boreholes will be advanced using a direct-push (GeoProbe) drilling rig to assess potential subsurface impacts beyond the limits of each drywell. In accordance with the DEQ RAO, soil samples will be collected from each borehole at a depth corresponding to the first increment below the bottom of each drywell at which native soil is encountered. Sample collection methods and depths outside of the drywells will be based on review of drywell feature data. Soil samples will be collected directly from the soil cores following documentation of stratigraphy and observations of potential subsurface impacts. Collected soil samples will be analyzed for Volatile Organic Compounds (VOCs), Semi-Volatile Organic Compounds (SVOCs), Northwest Total Petroleum Hydrocarbon-Diesel extended (TPH-Dx), Priority Pollutant Metals (PPM) for 13 metals as both Total and Synthetic Precipitation Leaching Procedure (SPLP), Poly Chlorinated Biphenyls (PCBs), Dioxins/Furans, and Perfluorinated Compounds (PFCs). If groundwater is encountered in either of the boreholes, water quality samples will be collected via a temporary well screen and analyzed for VOCs, SVOCs, NWTPH-Dx, PCBs, Dioxin/Furans,PPM 13 and PFCs.

Following sampling, but prior to disposal of composited UIC sediment, 3 Kings will submit analytical data associated with dry well sediment to an appropriate disposal facility (i.e., Waste Connections' Wasco County Landfill or Waste Management's Hillsboro Landfill) for waste profiling purposes, with the goal of identifying a disposal facility that will accept the waste material. Sediment/soil to be disposed the above sampling will be loaded into a dump truck for transport to the approved landfill facility. While the volume of material within the stormwater system features is presently unknown, for planning purposes it is anticipated that up to 100-tons of impacted soil will require removal and disposal. Actual quantities will be determined through certified weight slips from the landfill.

Following removal of potentially impacted sediment/soil from the interior of the UIC system, 3 Kings may use water jetting to aide in sediment removal. If excessive water is used, sediment stabilization may be required prior to hauling to the landfill.

Following receipt of analytical results, 3 Kings will prepare a report summarizing work activities, presenting laboratory analytical results, and documenting disposal information.

Groundwater Sampling – After a review of sediment and soil sample data collected as part of the UIC investigation is completed a groundwater monitoring well (MW-1) will be drilled and constructed immediately north of the UIC drywells as shown on Figure 5. Details for the drilling and installation of the monitoring well are described in Section 4.2.

4.2 – Drilling and Monitoring Well Installation

Following conferral with DEQ, a groundwater monitoring well (MW-1) will be drilled and constructed immediately north of the UIC drywells (Figure 5). The borehole will be advanced to an approximate depth of between 50- and 150-feet bgs, or the depth at which groundwater is first encountered.

Prior to drilling, Akana will coordinate with a subcontractor to identify the locations of subsurface utilities within the vicinity of the proposed well (Figure 5). Prior to drilling, the subcontractor will clear brush, vegetation, and all debris that may interfere with the safe execution of the work, using hand tools.

The subcontractor shall then use an air knife and vacuum truck, provided by the subcontractor, to advance pilot holes encompassing the maximum outer diameter of the largest drill casing to be used to a depth of at least 5-ft bgs. Following completion of the pilot hole, the subcontractor shall drill boreholes to the required depth, and retrieve continuous soil cores from the entire depth of the borehole to allow characterization of site lithology and screening for the potential presence of contamination.

4.2.1 Well Drilling, Construction, and Installation

Drilling and monitoring well installation activities will be conducted using a track-mounted, rotosonic (sonic) drilling rig equipped with 6-inch diameter threaded casing and a 4-inch diameter inner core barrel. Drilling activities are currently proposed to be conducted by Yellow Jacket Drilling Services (YJD) from Portland, Oregon and will be supervised by an Oregon Registered Geologist. Drilling and well construction activities will be conducted in general conformance with Oregon Administrative Rules (OAR) 690-240.

Continuous, undisturbed core samples will be monitored and visually classified in general accordance with the Unified Soil Classification System (USCS) Visual-Manual Procedures (American Society for Testing and Materials).

Continuous-core soil samples will be collected at approximate 10-ft intervals. Soil samples will be collected beginning at the depth of the bottom of the drywells down to the depth at which groundwater is encountered. One composite soil sample will be collected from each 10-ft drilling interval, submitted to the laboratory, and held for possible analyses. If impacts to groundwater quality are detected, as described below, selected soil samples will be analyzed for VOCs, SVOCs, NWTPH-Dx, PPM-13 metals (total), PCBs, dioxin/furans, and PFCs.

Once the target depth has been reached, the borehole will be completed as a 2-inch diameter groundwater monitoring well (MW-1) using threaded Schedule 40 polyvinyl chloride (PVC) casing with 10- to 15- feet of 0.010-inch (10 slot) screen and 10-20 silica sand.

Note that all depths, screen intervals, and lengths are estimates and may be adjusted based on actual subsurface conditions encountered. The use of temporary isolation casings may be necessary in order to seal off particular aquifer zones prior to advancement of the borehole. Rotosonic override casing may be used as isolation casing during well construction. The isolation casing will be advanced to the required depth prior to advancing the 6-inch override casing and core barrel.

4.2.2 Well Installation

Upon completion of the borehole to the specified depth, approximately 1-foot of sand filter pack will be placed at the bottom of the borehole, and the monitoring well will be constructed as follows:

+ The well will be constructed to create a 2-inch annulus around the well screen and casing. Monitoring wells shall be constructed using 5-ft to 10-ft sections of 2-inch ID, 0.010-inch factory-slotted, Schedule 40 PVC well screen, with a bottom cap connected to threaded, flush-joint, PVC riser. Wells installed to depths greater than 50-ft shall have stainless steel centralizers attached to the well casing approximately 5-ft above the top of the screened interval and at 30-ft intervals thereafter.

- The annular space between the borehole wall and well screen shall be backfilled with a well-graded, fine–to-medium-grained silica sand filter pack consisting of a thoroughly washed, round, durable, siliceous material (commercially available 10/20 grain size or equivalent). No organic material, anhydrite, gypsum, mica, or calcareous material shall be allowed. No water shall be used unless approved by the Akana representative.

- During placement of the sand filter pack, the well casing shall be suspended above the bottom of the borehole and shall remain suspended until placement of the sand filter pack is completed. The sand filter pack shall be installed in approximately 2-foot lifts to prevent bridging and shall extend to approximately 2-feet above the top of the screened interval. The inner-most rotosonic casing shall be moved upward slowly as the annulus is filled, and depth to sand filter pack measurements shall be collected periodically to verify proper placement. During the installation of the sand filter pack, the PVC riser shall have a temporary cap to prevent material from entering the well.

- Sodium bentonite pellets shall be placed above the sand filter pack to form a 2-foot thick seal on shallow wells (<50 feet deep bgs) and a 5-foot-thick seal on the deeper wells (>50 feet deep bgs). Depth to bentonite seal measurements shall be collected periodically to verify proper seal placement. The bentonite must be allowed to hydrate for at least one hour.

- The remaining borehole annular space shall be completed with a cement-bentonite grout slurry using a side-discharge tremie method to prevent grout from penetrating the bentonite seal. The grout slurry shall extend from the top of the bentonite pellets to approximately 1-foot below ground surface.

- The grout slurry shall be in conformance with OAR 690-240-0475 and shall consist of Portland cement conforming to ASTM C-150, Type 1 and powdered bentonite. The maximum allowable water content of the grout mix shall be 5.2 gallons per standard 94-pound sack of cement. The maximum amount of bentonite allowable in the grout mix shall be 3.75 pounds per standard 94-pound sack of cement. Bentonite used as a slurry for grouting shall have a minimum mud weight of at least 9.5 pounds per gallon.

- Bentonite shall be mixed either into the water prior to adding the cement, or into the cement powder prior to adding water. To avoid creating lumps of bentonite in the grout, adding bentonite to a mixed grout shall not be permitted. The subcontractor shall provide a mud scale to demonstrate that the cement grout returns at the ground surface are within 5-percent of the density of the cement grout being pumped into the borehole. The rotosonic casings shall be gradually withdrawn as grout is pumped into the borehole. The subcontractor shall withdraw drill casing at a rate that does not exceed the rise of the grout within the borehole. The grout shall be allowed to cure a minimum of 24 hours prior to well development.

+ The monitoring well head shall be completed with a minimum 2ft X 2ft, 6-inch thick, elevated concrete pad or vault and 8-inch diameter traffic-rated flush mount manhole centered in the concrete pad. A watertight, locking, expansion cap shall be installed on top of the PVC well casing. In accordance with OAR 690-240-0024, the subcontractor shall affix a metal name plate to the surface completion that includes the well identification number and date of installation.

A "sample" well diagram and schematic is provided in Figure 6.

4.2.3 Well Development

Within seven (7) days of completion of the monitoring well, but no sooner than 24 hours after cement grouting has been completed, the well will be developed. The subcontractor will develop the well first with a surge block and then by pumping with a submersible pump per ASTM D 5521. All development activity will be coordinated and observed by an Akana representative.

Temperature, pH, specific conductance and turbidity readings will be monitored during well development by an Akana representative. Development shall be considered complete when:

+ All visible sediment is removed from the well;
+ Turbidity is less than 10 NTUs (Nephelometric Turbidity Units); or
+ The field turbidity does not improve after one hour of active development.

4.2.4 Decontamination

Drill rigs, tooling, water tanks and associated equipment shall be thoroughly decontaminated before being mobilized to the site. Subsequent decontamination shall be conducted on site. Drill rigs, tooling, and associated equipment shall be steam-cleaned prior to commencement of drilling each well. A power source and access to potable water will be available at or nearby the drilling locations.

Decontamination of the drill rig, casings, core barrels, pipes, bits, and tools shall consist of high-pressure, low-volume steam cleaning at an area designated by the Akana representative. The subcontractor shall provide all equipment and supplies necessary for decontamination. If necessary, the subcontractor shall construct a decontamination pad with raised sides of sufficient dimensions to minimize over spray and contain all fluids during decontamination activities. Contaminated drilling equipment and tools shall be placed on elevated racks constructed within the decontamination pad to facilitate removal of waste material and prevent re-contamination.

The subcontractor shall verify that the decontamination pad is completely emptied of all decontamination fluids at the end of each workday, and shall take measures to mitigate accumulation of rainwater in the decontamination pad.

4.2.5 Management of Investigation Derived Waste

Investigation-derived waste (IDW) shall consist of used personal protective equipment (PPE), potentially-contaminated soil, drilling fluids, decontamination fluids, and groundwater. PPE, such as nitrile gloves, shall be placed in black plastic bags and properly disposed. Soil and water IDW generated as part of the field activities shall be containerized in DOT-approved 55-gallon steel drums. The subcontractor shall be responsible for staging the drums at a vehicle-accessible location as designated by the Akana representative.

4.2.6 Groundwater Sampling

Groundwater samples collected for laboratory analyses must contain only fresh, aquifer formation water representative of aquifer conditions beneath the site. Water residing in the well casing and adjacent filter pack material becomes stagnant as the solution chemistry of the formation water changes in response to changes in temperature, barometric pressure or gas content. Therefore, wells must be sampled by evacuating this stagnant water at a low flow rate with minimal disturbance to the water column.

4.2.6.1 Purging and Sampling Procedures

The well will be purged prior to sampling using the "low flow" method. The purge rate is designed to be low enough to simulate natural groundwater flow conditions and to pull groundwater from a discrete zone within the adjacent aquifer near the pump intake, rather than pulling stagnant groundwater from within the well or from a large area around the well. A low purge rate is also intended to reduce the possibility of stripping volatile constituents from groundwater and to reduce the likelihood of mobilizing colloids in the subsurface that are typically immobile under natural groundwater flow conditions.

Groundwater sampling will be performed using a submersible pump and low-flow purging and sampling methodologies. Field parameters including, at a minimum, water level, turbidity, temperature, pH, and conductivity will be monitored during well purging using a portable meter equipped with a flow-through cell. Other groundwater conditions such as color, odor, and presence of sheen or LNAPL will also be documented on field sheets. Samples will be collected once field parameters have stabilized (within 10%) and a minimum of one casing volume has been removed. Samples will be stored in a cooler with ice pending transport to the analytical laboratory using standard chain-of-custody protocols. One field duplicate sample will be collected, and trip blanks for volatile analyses will be provided by the analytical laboratory.

As outlined in section 3C (5) of the DEQ removal action order, collected groundwater samples will be analyzed for VOCs, SVOCs, NWTPH-Dx, PPM-13 metals (total and dissolved), PCBs, dioxin/furans, and PFCs.

The laboratory analytical data summary will be evaluated against the appropriate Oregon DEQ risk-based concentrations and screening levels. USEPA Regional Screening Levels will be referenced for compounds that do not have DEQ RBC values assigned to them.

4.2.7 Sample Handling and Documentation

Samples must be placed in appropriate sample containers, properly preserved and stored, and traceable from the time of sample collection until receipt of sampling data. Therefore, written records (e.g., chain-of-custody and field sampling forms, logbooks) must exist for each sample throughout sample collection, transport, storage, and analytical activities.

4.2.7.1 Sample Containers, Preservatives, and Holding Times

Sample analyses, matrices, method numbers, containers, preservation methods, and holding times associated with the analyses to be performed are listed in Table 2. Samples will be preserved as specified for the appropriate test methods.

4.2.7.2 Sample Label and Identification

A sample label is affixed to each sample bottle before sample collection. Each label includes the following information:

+ Sample identification number/designation
+ Project location/sampling event
+ Date and time of sample collection
+ Preservatives added to the sample
+ Parameter(s) for which the sample is to be analyzed.

Water samples are labeled with a unique sample identification number. The sample number consists of the appropriate monitoring well designation followed by, and separated by a hyphen from, a date identification code. The date identification code consists of a four-digit number that represents the month and year that the sample was collected. For example, the sample number MW-1-0718 denotes a sample collected in July 2018 from monitoring well MW-1.

All field duplicate samples are identified by attaching "-FD" to the end of the sample identification. All field blank samples are labeled as "Field Blank." All trip blanks are labeled as "Trip Blank." Distinctions among multiple field or trip blanks can be made by the associated dates.

4.2.7.3 Sample Custody, Storage and Transportation

After sampling is completed for the day, all samples are packed for shipping and placed in iced transport containers. The transport containers consist of sturdy, insulated, commercially produced coolers. All bottle caps are secured tightly. All glass containers are placed securely into bubble wrap material within the shipping container to avoid breaking. Trip blanks are included in any transport container that carries water samples being analyzed for VOCs.

A custody seal is affixed to the container prior to lab pickup or delivery. The chain-of-custody (COC) form should be taped to the inside lid of the cooler or shipping container. The COC form will include information such as sample names, sample times, the sample date, the type of media, and the analyses requested. Every person who takes possession of the samples while transporting the samples from the field to the laboratory must sign the COC form.

For most samples, the sampling team either transports the samples directly to the laboratory or has a lab courier come to the Site at the end of each sampling day to pick up samples for delivery to the laboratory. However, there are cases when samples must be shipped by mail or other delivery service. Under these circumstances the cooler lid and drain holes should be taped shut. A copy of the shipping papers or tracking number should be kept with the field copy of the COC form. Samples will be packaged and shipped to the analytical laboratory according to U.S. Department of Transportation and commercial carrier regulations

Upon receipt of the sample transport containers by the analytical laboratory, laboratory personnel open the containers and examine the contents for problems such as damaged transport containers, broken custody seals, missing or broken sample bottles, chain-of-custody discrepancies, and documentation errors. Problems are reported to the project manager. After the samples are analyzed by the analytical laboratory, laboratory personnel store the samples in a secure location at the laboratory for the remainder of their holding times.

4.3 – Task 2: Material Management Plan

Akana has identified five (5) discrete material types which (if encountered) will be managed as part of this work plan. These materials include: the car shredder, burned car husks and associated parts, a debris layer, surficial soils, and sediment which has accumulated in the stormwater system. The following describes how each of these material types will be managed on-site, and properly processed or disposed of, as applicable and appropriate.

Car Shredder - The shredder unit is located between what has been identified as fire affected Area A and Area B and is identified as Area D (Figure 3). The unit weighs approximately 45 tons and was severely damaged as a result of the fire. Because the unit cannot be reasonably moved by crane it will need to be disassembled for proper disposal or recycling. NW Metals staff currently plan to disassemble, or use cutting equipment to size reduce, the damaged car shredder and associated materials handling system. The size reduced material will primarily consist of recyclable metal. The size reduced material will be containerized and shipped off site

using a bill of lading to a recycling facility. A timeline for the dismantling of the shredder unit has not been established but is being handled internally by NW Metals, Inc. The estimated time to size reduce and remove the damaged shredder is 10 business days.

Car Husks - Car husks moved as part of the fire response are included with the materials managed by this plan. A number of car husks previously slated for shredding were moved away from the fire affected areas to help Portland Fire & Rescue gain access to fire "hot spots." Ultimately, all car husks located in Area A, Area B, and those moved to non-fire affected areas of the site as part of the fire-fighting response, will be processed by NW Metals and the processed material transported off-site for recycling. NW Metals has ordered a replacement car shredder system, which has been manufactured and is currently in transit to the NW Metals facility. Once installed, all car husks covered by this work plan will be processed through the car shredding system. Prior to processing, each car husk will be visibly inspected for visible contamination. Observed contamination will be removed prior to processing the car husk through the shredding system. Using a front end loader, NW Metals will feed car husks into the shredding system. The shredding system will size reduce the car husks to an approximate 5 inch minus size. The car shredder has a sophisticated materials handling system which will segregate the shredded material into three distinct recycle streams: 1) ferrous metal, 2) non-ferrous metal, 3) low density material. The low density material will consist of recyclable plastics and plastic coated wire. For the car husks burned in the fire, we anticipate low recovery of the low density material because most of the recycled plastic and plastic coating on wires was destroyed in the fire. Segregated recyclable materials will be containerized and shipped to a recycling facility under a bill of lading. The new car shredder is capable of processing 1 car every 5 minutes. At this rate we estimate 10-15 business days to process the car husks affected by the fire once the new shredding system has been installed and commissioned.

Debris Layer - The debris layer is anticipated to include a mixture of fire ash, soil, and fine granular material which has accumulated below the burned car husks. This layer may also contain broken metal and plastic debris which separated from the car husks during stockpiling activities. In order to gain access to the debris layer and underlying surface soils, car husks will need to be processed through the new shredding system or moved and temporarily stockpiled. If the car husks are to be moved and temporarily stockpiled the following procedure will be followed: Area C (Figure 3) was not part of the site impacted by the fire and contains relatively few car husks or debris. This area will be cleared and surficial soil samples will be collected and analyzed. Area C will then be used as a staging area to temporarily store and manage car husks from Areas A while underlying areas are sampled and assessed. Subsequent to completion of field activities in Area A, car husks will be moved from Area B to A and this process for sampling and analysis will be repeated for Areas B, C, D, and E. Akana is proposing that materials present in the debris layer be collected and temporarily stockpiled and stored on-site in 55-gallon drums pending compositing, characterization, and analysis for proper disposal (see Section 4.1). The debris layer will be collected by hand using shovels, brooms and pans. If excessive dust is observed during debris layer collection, the area will be sprayed with water for dust suppression.

On-Site and Off-Site Surficial Soils - Surficial soils are anticipated to consist of quasi-native soils present beneath metal plates and in unpaved areas of the NW Metals property, and in the backyards of the neighboring residential properties. The on-site and off-site soils may have been impacted by fire suppression runoff or soot deposition. Where present or exposed, this material will be sampled and analyzed to assess for potential near-surface soil impacts associated with fire suppression activities in accordance with the proposed sampling methodology outlined above (see Section 4.1).

UIC System - The sampling and material handling associated with the UIC system is described in Section 4.1, above.

Receipts for recycled materials, solid waste, and hazardous waste will be provided to DEQ in the final report as outlined in Section 4.4, below.

The site-specific Health and Safety Plan (HASP) is provided in Appendix A.

4.4 – Task 3: Analytical Data Analysis

Sediment, soil and groundwater samples will be submitted to ESC Lab Sciences in Tennessee for analyses. Selected samples will be analyzed for one or more of the following parameters and analytical methods:

- Volatile Organic Compounds (VOCs) by EPA Method 8260 and 5035 (soil/sediment)
- Semi-Volatile Organic Compounds (SVOCs) by EPA Method 8270
- Diesel-Range Total Petroleum Hydrocarbons by Northwest Method NWTPH-Dx
- Priority Pollutant Metals (PPM-13) as Total Metals by EPA Method 6010B and 7471B
- Polychlorinated Biphenyls (PCBs) by EPA Method 8082A
- Dioxin/Furans by EPA Method 8290A
- Perfluorinated Compounds (PFCs) by EPA Method 537 Modified

Laboratory analytical methods, data package deliverables, method detection/reporting limits, and related laboratory analytical information is presented in Table 2.

Laboratory costs assume a normal turn-around-time of approximately 14 calendar days for receipt of analytical reports.

A copy of the Quality Assurance Plan (QAP) is provided in Appendix B.

4.5 – Task 4: Final Removal Action Report

Upon receipt of all laboratory analytical data, Akana will prepare a draft Removal Action Report presenting the results and findings of the investigation. The report will include a summary of all field activities, methodologies and observations, a summary of laboratory analytical data and results, figures, photos, and field observations.

The laboratory analytical data summary will include a comparison to appropriate Oregon DEQ risk-based concentrations and screening levels. USEPA Regional Screening Levels will be referenced for compounds that do not have DEQ RBC values assigned to them.

5.0 Project Personnel, Roles, and Subcontractors

5.1 – Project Team

Our Project Team will be led by Terry Hosaka. Mr. Hosaka is a Principal with Akana and has over 30 years of Site Investigation and Remediation experience. Mr. Hosaka will be Project Manager assisted with technical review by Bill Renfroe. Mr. Hosaka will also be assisted by K. Brent Hamil, RG, Oregon Registered Geologist.

5.2 – Subcontractor Support

NW Metals will be self-performing all the material management contractor work. Akana will be providing technical and field sampling services. NW Metals will be direct contracting with ESC Lab Sciences (ESC Labs) for analytical laboratory services:

ESC Lab – Akana has selected ESC Labs to provide analytical services for this project. ESC operates the largest single location laboratory in the nation. Their single laboratory model reduces overhead cost and increases overall laboratory efficiency and quality. Akana has a long history of teaming with ESC Labs and because ESC Labs is the only lab certified by a State Agency.

3 Kings Environmental, Inc. – Akana has a long standing professional relationship with 3 Kings. We have worked with 3 Kings on a variety of projects and project types, including environmental, excavation, and demolition. They provide a wide range of environmental services and are equipped to serve commercial, industrial and residential clients. These services are provided safely, economically and in full compliance with State and Federal regulations. 3 Kings personnel are OSHA HAZMAT certified and have over 45 years of combined experience in the environmental field.

Yellow Jacket Drilling Services – Yellow Jacket Drilling personnel and Akana have worked together for over 15 years. YJD is uniquely qualified to provide a variety of subsurface drilling and well construction services. Yellow Jacket's field experience encompasses all methods of drilling, site investigation, remediation, and geotechnical testing. They also have an arsenal of drilling and sampling tools, and special tools available to meet specific project needs. Yellow Jacket personnel are OSHA HAZMAT certified and Oregon Water Resource Department-licensed well constructers in Oregon.

Limitations

The proposed scope is not intended to provide a comprehensive assessment of environmental conditions at the subject site. Rather, it is intended to provide a description of plans for material

management, and limited assessment of debris and on-site surficial soil conditions. Additional work plans will be developed to address the remaining RAOs included in the DEQ Order. These additional work plans will be developed as legal, access, and work scope uncertainty issues are resolved.

References

Creekside Environmental Consulting, LLC. 2013. Technical Memorandum. UIC Modifications for Rule Authorization. Sunbelt Rentals Commercial Park, 7530-7626 NE Killingsworth Street, Portland, Oregon. May 29, 2013.

DEQ, 2018. Removal Action Order: OERS # 2018-0553

DEQ. 2001. Guidance for Ecological Risk Assessment. Oregon Department of Environmental Quality. April 1998. SLVs updated December 2001.

DEQ. 2007. Guidance for Assessing Bioaccumulative Chemicals of Concern in Sediment. Oregon Department of Environmental Quality. Updated April 2007.

DEQ. 2012. Risk-Based Concentrations for Individual Chemicals. Oregon Department of Environmental Quality. Revised June 7, 2012.

Trimble, D.E., 1963, Geology of Portland, Oregon and Adjacent Areas [Plate 1: Geologic map and diagrammatic section of Portland, Oregon and adjacent areas]: U.S. Geological Survey Bulletin 1119, scale 1:62,500, http://ngmdb.usgs.gov/Prodesc/proddesc_23518.htm. Image Creation Date: MAY. 02, 2011.

Figures

GENERAL NOTES:

1. ALL WORK AND MATERIALS SHALL COMPLY WITH THE PLANS AND PROJECT SPECIFICATIONS.
2. PERMIT APPLICATIONS WILL BE SUBMITTED BY THE OWNER. CONTRACTOR SHALL BE RESPONSIBLE FOR PERMIT FEES & APPLICABLE LICENSES. COMPLYING WITH CONDITIONS AND REQUIREMENTS OF ALL PERMITS.
3. THE LOCATION OF EXISTING UNDERGROUND UTILITIES SHOWN ON THE PLANS IS APPROXIMATE. ADDITIONAL UNDERGROUND UTILITIES MAY EXIST. CONTRACTOR SHALL DETERMINE EXACT LOCATIONS OF UNDERGROUND UTILITIES AND SHALL PROTECT THEM FROM DAMAGE DURING CONSTRUCTION.
4. CONTRACTOR SHALL NOTIFY THE OWNER 48 HOURS BEFORE STARTING CONSTRUCTION, AND 24 HOURS BEFORE RESUMING WORK AFTER SHUTDOWNS EXCEPT FOR NORMAL RESUMPTION OF WORK FOLLOWING WEEKENDS OR HOLIDAYS. CONTRACTOR SHALL NOTIFY OWNER A MINIMUM OF 48 BUSINESS HOURS PRIOR TO ANY TESTING OR REQUIRED INSPECTION.
5. ANY ALTERATION FROM THESE PLANS, EXCEPT MINOR FIELD ADJUSTMENT NEEDED TO MEET EXISTING FIELD CONDITIONS, SHALL FIRST BE APPROVED BY THE OWNER AND ENGINEER. ANY ALTERATION OR VARIANCE FROM THESE PLANS SHALL BE DOCUMENTED ON CONSTRUCTION FIELD PRINTS AND TRANSMITTED TO THE ENGINEER.
6. CONTRACTOR SHALL KEEP AND MAINTAIN A CURRENT SET OF APPROVED DRAWINGS ON SITE AT ALL TIMES AND SHALL KEEP AN ACCURATE AS-BUILT RECORD COPY OF PLANS. AS-BUILT DRAWINGS SHALL BE PROVIDED TO OWNER AT COMPLETION OF PROJECT.
7. CONTRACTOR SHALL PERFORM ALL WORK ILLUSTRATED ON THE DRAWING SET INCLUDING ALL INCIDENTAL WORK REQUIRED TO COMPLETE THE PROJECT IN A MANNER ACCEPTABLE TO THE OWNER.
8. AT THE END OF EACH WORK DAY THE CONTRACTOR SHALL CLEAN UP THE PROJECT AREA AND LEAVE IT IN A NEAT AND SECURED MANNER. UPON COMPLETION, CONTRACTOR SHALL LEAVE THE PROJECT AREA NEAT AND FREE OF DEBRIS AND UNUSED MATERIAL.
9. CONTRACTOR SHALL REPLACE ALL EXISTING IMPROVEMENTS WHICH ARE AFFECTED BY CONSTRUCTION TO AS GOOD OR BETTER THAN ORIGINAL CONDITION.
10. CONTRACTOR SHALL PROVIDE THE NECESSARY PROTECTION TO MINIMIZE EROSION AND IMPACT TO ADJACENT PROPERTY.

Know what's **below.** **Call** before you dig.

CALL 48 HOURS
BEFORE YOU DIG
1-800-424-5555

OWNER

NW METALS
MO ANOTTA
7600 NE KILLINGSWORTH ST.
PORTLAND, OR 97218

PRINCIPAL

AKANA
TERRY HOSAKA, PMP
6400 SE LAKE ROAD, SUITE 270
PORTLAND, OREGON 97222
(503) 652-9090

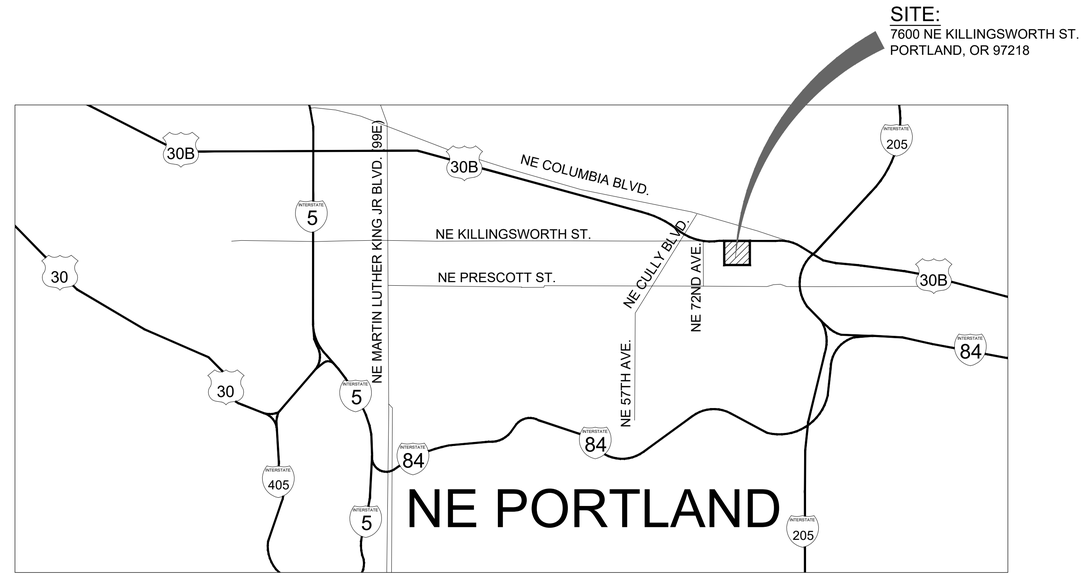

VICINITY MAP
NTS

NOT FOR CONSTRUCTION

P:\PDX PROJECTS\2018\18-024 - NW Metals Removal Action Order\CAD\2-Sheets\Civil\C - 01_VICINITY MAP.dwg 4/27/2018 4:08 PM

COPYRIGHT 2015, AKANA, ALL RIGHTS RESERVED

BAR IS ONE INCH ON ORIGINAL DRAWING. IF NOT ONE INCH ON THIS SHEET, ADJUST SCALES ACCORDINGLY

NO.	DATE	BY	REVISIONS

AKANA
Plan + Design + Engineer + Manage

6400 SE Lake Road, Ste 270
Portland, Oregon 97222
Voice (503) 652-9090

OWNER
NW METALS
7600 NE KILLINGSWORTH ST
PORTLAND, OR 97218

DESIGNED BY
DRAWN BY
CHECKED BY
DRAWING DATE

SUBMITTAL

NW METALS REMOVAL
ACTION ORDER
VICINITY MAP AND GENERAL NOTES

PROJECT NO. AK18-024
FIGURE NO. 1

P:\PDX PROJECTS\2018\18-024 - NW Metals Removal Action Order\CAD\2-Sheets\Civil\C - 02_SITE PLAN.dwg 4/27/2018 4:04 PM

COPYRIGHT 2015, AKANA, ALL RIGHTS RESERVED

BAR IS ONE INCH ON ORIGINAL DRAWING. IF NOT ONE INCH ON THIS SHEET, ADJUST SCALES ACCORDINGLY

NO.	DATE	BY	REVISIONS

AKANA
Plan + Design + Engineer + Manage
6400 SE Lake Road, Ste 270
Portland, Oregon 97222
Voice (503) 652-9090

OWNER

NW METALS

7600 NE KILLINGSWORTH ST
PORTLAND, OR 97218

DESIGNED BY
DRAWN BY
CHECKED BY
DRAWING DATE

COMBINED ORTHO & GOOGLE IMAGE

SUBMITTAL

NW METALS REMOVAL ACTION ORDER

SITE PLAN

PROJECT NO. AK18-024

FIGURE NO. 2

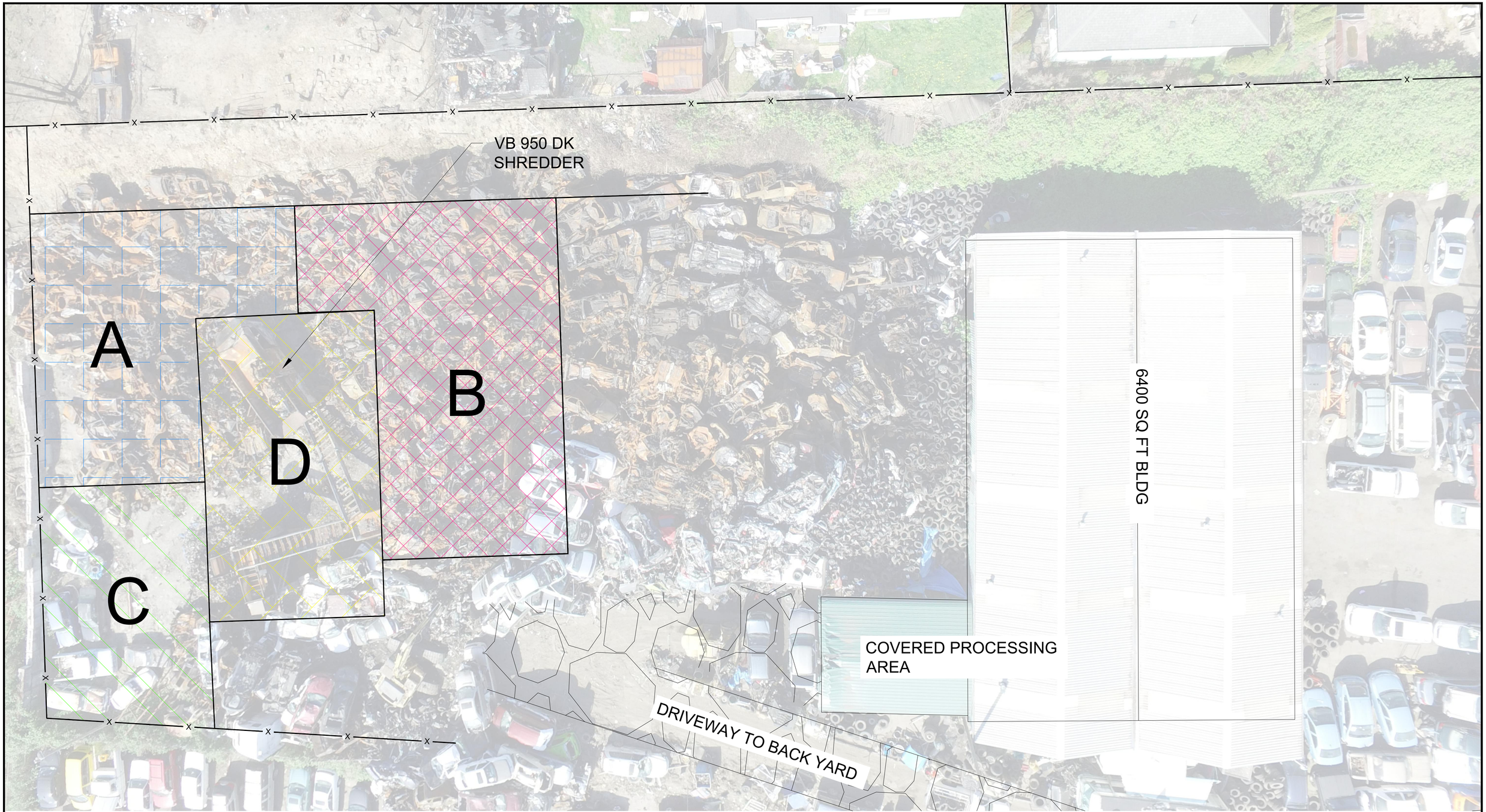

NOT FOR CONSTRUCTION

P:\PDX PROJECTS\2018\18-024 - NW Metals Removal Action Order\CAD\2-Sheets\Civil\C - 03_REMOVAL PLAN.dwg 4/27/2018 4:01 PM

COPYRIGHT 2015, AKANA, ALL RIGHTS RESERVED

BAR IS ONE INCH ON ORIGINAL DRAWING. IF NOT ONE INCH ON THIS SHEET ADJUST SCALES ACCORDINGLY

NO.	DATE	BY	REVISIONS

AKANA
Plan + Design + Engineer + Manage
6400 SE Lake Road, Ste 270
Portland, Oregon 97222
Voice (503) 652-9090

OWNER

NW METALS

7600 NE KILLINGSWORTH ST
PORTLAND, OR 97218

DESIGNED BY
DRAWN BY
CHECKED BY
DRAWING DATE

SUBMITTAL

NW METALS REMOVAL
ACTION ORDER

REMOVAL PLAN

PROJECT NO. AK18-024

FIGURE NO. 3

TYPICAL GRID SPACING

NOT FOR CONSTRUCTION

P:\PDX PROJECTS\2018\18-024 NW Metals Removal Action Order\CAD\2-Sheets\Civil\C-04_SAMPLE AREAS.dwg 6/26/2018 2:50 PM
COPYRIGHT 2015, AKANA, ALL RIGHTS RESERVED

BAR IS ONE INCH ON ORIGINAL DRAWING. IF NOT ONE INCH ON THIS SHEET, ADJUST SCALES ACCORDINGLY

NO.	DATE	BY	REVISIONS

AKANA
Plan + Design + Engineer + Manage
6400 SE Lake Road, Ste 270
Portland, Oregon 97222
Voice (503) 652-9090

OWNER
NW METALS
7600 NE KILLINGSWORTH ST
PORTLAND, OR 97218

DESIGNED BY
DRAWN BY
CHECKED BY
DRAWING DATE

COMBINED ORTHO & GOOGLE IMAGE

NW METALS REMOVAL ACTION ORDER

OFF-SITE SAMPLING PLAN

PROJECT NO. AK18-024
FIGURE NO. 4
4 OF 5

LEGEND:

- CATCH BASIN
- STORM DRAIN MANHOLE
- SEDIMENTATION MANHOLE
- DRYWELL
- PROPOSED BORE HOLE
- PROPOSED MONITORING WELL
- SD — STORM DRAIN LINE
- x — FENCE

MAGNETIC

APPROXIMATE SCALE

0 40 80 FEET

NOT FOR CONSTRUCTION

\\webserver\projects\PDX PROJECTS\2018\18-024 - NW Metals Removal Action Order\CAD\2-Sheets\Civil\C - 04_STORMWATER PLAN.dwg 5/23/2018 11:09 AM

COPYRIGHT 2015, AKANA, ALL RIGHTS RESERVED

BAR IS ONE INCH ON ORIGINAL DRAWING. IF NOT ONE INCH ON THIS SHEET ADJUST SCALES ACCORDINGLY

NO.	DATE	BY	REVISIONS

AKANA
Plan + Design + Engineer + Manage
6400 SE Lake Road, Ste 270
Portland, Oregon 97222
Voice (503) 652-9090

OWNER

NW METALS

7600 NE KILLINGSWORTH ST
PORTLAND, OR 97218

DESIGNED BY
DRAWN BY
CHECKED BY
DRAWING DATE

COMBINED ORTHO & GOOGLE IMAGE

SUBMITTAL

NW METALS REMOVAL ACTION ORDER

STORMWATER PLAN

PROJECT NO. AK18-024

FIGURE NO. 4

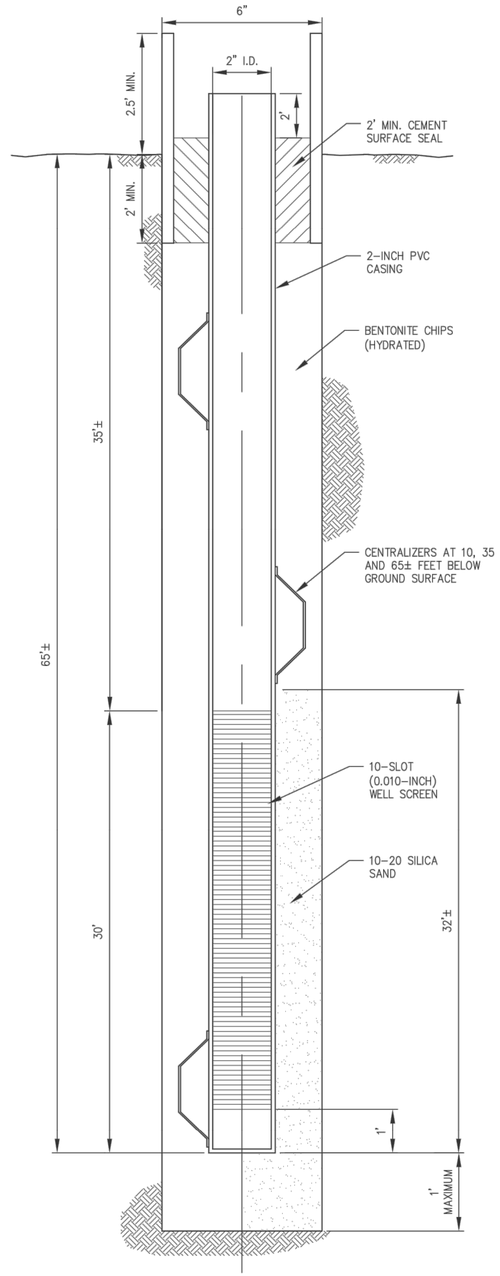

MONITORING WELL DETAIL

SCALE: NTS

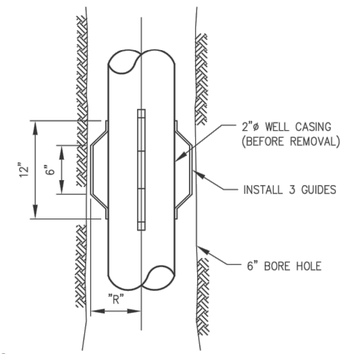

NOTES:

1. SPACE 3 GUIDES EQUIDISTANT AROUND CIRCUMFERENCE.
2. CASING GUIDES SHALL BE SPACED PURSUANT TO THE BASIC SPECIFICATIONS.
3. GUIDES SHALL BE SHOP FABRICATED.
4. "R" = RADIUS OF BORE MINUS 1/2".

CASING GUIDE DETAIL

SCALE: NTS

NOT FOR CONSTRUCTION

P:\PDX PROJECTS\2018\18-024 NW Metals Removal Action Order\CAD\2-Sheets\Civil\C - 05_STORMWATER PLAN.dwg 6/26/2018 3:34 PM
COPYRIGHT 2015, AKANA, ALL RIGHTS RESERVED

BAR IS ONE INCH ON ORIGINAL DRAWING. IF NOT ONE INCH ON THIS SHEET, ADJUST SCALES ACCORDINGLY

NO.	DATE	BY	REVISIONS

AKANA
Plan + Design + Engineer + Manage
6400 SE Lake Road, Ste 270
Portland, Oregon 97222
Voice (503) 652-9090

OWNER

NW METALS

7600 NE KILLINGSWORTH ST
PORTLAND, OR 97218

DESIGNED BY
DRAWN BY
CHECKED BY
DRAWING DATE

NW METALS REMOVAL ACTION ORDER

WELL AND CASING DETAIL

PROJECT NO. AK18-024

FIGURE NO. 6

Tables

Table 1 - Analytical Methods

Debris/Soil Analysis	Analytical Method	Sample Bottle	Preservation
VOCs - Standard List	8260C	(3)40ml amb	NaHSO4/MeOH
SVOCs - Standard List	8270D	4ozClr	NoPres
Northwest TPH Diesel range	NWTPH-Dx	4ozClr	NoPres
Pollutant Metals (PPM-13) as Total Metals	6010B & 7471B (Mercury)	4ozClr	NoPres
PCBs - Standard List	8082A	4ozClr	NoPres
Dioxins & Furans, 17 Isomers List	8290A		
Perfluorinated compounds	537 (modified)		
% moisture		2ozClr	NoPres
Safe & Env. Responsible Waste Management		-	-

Table 2 - Method Reporting Limits and Screening Values

Analytical Method	EPA Method Number	Matrix	CAS Number	Analyte	MRL (µg/L)	MRL (mg/L)	DEQ Ecological SLVs - Aquatic (mg/L)	DEQ Ecological SLVs - Birds (mg/L)	DEQ Ecological SLVs - Mammals (mg/L)
			108-95-2	Phenol	200	0.2	0.110 n		
			111-44-4	Bis (2-chloroethyl) ether	30	0.03			
			95-57-8	2-Chlorophenol	30	0.03	2.0 q		
			541-73-1	1,3-Dichlorobenzene	20	0.02			
			106-46-7	1,4-Dichlorobenzene	20	0.02			
			100-51-6	Benzyl alcohol	150	0.15	0.0086 o		
			95-50-1	1,2-Dichlorobenzene	30	0.03			
			95-48-7	2-Methylphenol	30	0.03	0.013 o	ne	2200 f
			15831-10-4	3&4 Methylphenol	40	0.04			
			621-64-7	N-Nitrosodi-n-propylamine	30	0.03	0.117 r		
			67-72-1	Hexachloroethane	50	0.05	0.5640 q		
			98-95-3	Nitrobenzene	30	0.03	0.54 r		
			78-59-1	Isophorone	20	0.02	2.34 r		
			88-75-5	2-Nitrophenol	50	0.05			
			105-67-9	2,4-Dimethylphenol	200	0.2	ne		
			65-85-0	Benzoic acid	200	0.2			
			111-91-1	Bis (2-chloroethoxy) methane	30	0.03			
			120-83-2	2,4-Dichlorophenol	200	0.2	3.65 q		
			120-82-1	1,2,4-Trichlorobenzene	20	0.02			
			91-20-3	Naphthalene	20	0.02	0.620 q	ne	284 f, i
			106-47-8	4-Chloroaniline	500	0.5	ne		
			87-68-3	Hexachlorobutadiene	50	0.05	0.0093 q		
			59-50-7	4-Chloro-3-methylphenol	30	0.03			
			91-57-6	2-Methylnaphthalene	20	0.02			
			77-47-4	Hexachlorocyclopentadiene	150	0.15	0.00052 q		
			88-06-2	2,4,6-Trichlorophenol	30	0.03	0.970 q		
			95-95-4	2,4,5-Trichlorophenol	20	0.02	ne		
			91-58-7	2-Chloronaphthalene	50	0.05	0.032 r		
			88-74-4	2-Nitroaniline	30	0.03			
			131-11-3	Dimethyl phthalate	30	0.03	0.003 q		
			208-96-8	Acenaphthylene	50	0.05			
			606-20-2	2,6-Dinitrotoluene	30	0.03	0.230 q		
			99-09-2	3-Nitroaniline	150	0.15	ne		
SVOCs - Standard List	8270D		83-32-9	Acenaphthene	20	0.02	0.520 q		
			51-28-5	2,4-Dinitrophenol	250	0.25	ne		
			100-02-7	4-Nitrophenol	750	0.75	0.150 q		
			132-64-9	Dibenzofuran	20	0.02	0.0037 o		
			121-14-2	2,4-Dinitrotoluene	50	0.05	0.230 q		
			84-66-2	Diethyl phthalate	600	0.6	0.210 o	ne	$1.8x10^4$ f
			7005-72-3	4-Chlorophenyl phenyl ether	30	0.03			
			86-73-7	Fluorene	100	0.1	0.0039 p		
			100-01-6	4-Nitroaniline	100	0.1	ne		
			534-52-1	4,6-Dinitro-2-methylphenol	250	0.25			
			86-30-6	N-Nitrosodiphenylamine	150	0.15	0.210 o		
			101-55-3	4-Bromophenyl phenyl ethor	30	0.03	0.0015 o		
			118-74-1	Hexachlorobenzene	30	0.03	ne		
			87-86-5	Pentachlorophenol	500	0.5	0.015 t	ne	1.8 f
			85-01-8	Phenanthrene	50	0.05	0.0063 n		
			120-12-7	Anthracene	750	0.75	0.013 o		
			84-74-2	Di-n-butyl phthalate	150	0.15	0.035 o	0.8 h	2200 f
			206-44-0	Fluoranthene	150	0.15	0.00616 n		
			129-00-0	Pyrene	100	0.1			
			85-68-7	Butyl benzyl phthalate	500	0.5	0.019 o		
			91-94-1	3,3'-Dichlorobenzidine	750	0.75			
			56-55-3	Benzon [a] anthracene	50	0.05	0.000027 o		
			218-01-9	Chrysene	30	0.03			
			117-81-7	Bis(2-ethylhexyl) phthalate	750	0.75	0.003 o	8 h	73 f
			117-84-0	Di-n-octyl phthalate	50	0.05	0.708 p		
			50-32-8	Benzo [a] pyrene	50	0.05	0.000014 o	ne	8 f, i
			193-39-5	Indeno [1,2,3-cd] pyrene	50	0.05			
			53-70-3	Dibenz (a,h) anthracene	30	0.03			
			191-24-2	Benzo [g,h,i] perylene	50	0.05			
			86-74-8	Carbazole	30	0.03			
			90-12-0	1-Methylnaphthalene	50	0.05	0.0021 o	ne	ne
			205-99-2	Benzo [b] fluoranthene	50	0.05			
			207-08-9	Benzo [k] fluoranthene	50	0.05			
			108-60-1	bis (chloroisopropyl) ether	30	0.03			

Analytical Method	EPA Method Number	Matrix	CAS Number	Analyte	MRL (µg/L)	MRL (mg/L)	DEQ Ecological SLVs - Aquatic (mg/L)	DEQ Ecological SLVs - Birds (mg/L)	DEQ Ecological SLVs - Mammals (mg/L)
Northwest TPH Diesel Range	NWTPH-Dx		STL00163	#2 Diesel (C10-C24)	1.1	0.0011			
			STL00299	Motor Oil (>C24-C36)	3.5	0.0035			
Northwest TPH Gasoline Range	NWTPH-Gx		STL00228	Gasoline	0.25	0.00025			
Pollutant Metals (PPM-13) as Total Metals	6010B & 7471B (Mercury)		7439-97-6	Mercury	0.0003	0.0000003	0.00077 t		
			7440-38-2	Arsenic	0.005	0.000005	0.150 t	18 h	6 f, i
			7440-39-3	Barium	0.006	0.000006	0.004 o	150 h	39 f
			7440-43-9	Cadmium	0.002	0.000002	0.0022 t	10 h	8 f, i
			7440-47-3	Chromium III	0.002	0.000002	0.074 t	7.2 h	$2.1x10^4$ f
			7439-92-1	Lead	0.004	0.000004	0.0025 t	28 h	323 f, i
			7782-49-2	Selenium	0.04	0.00004	0.005 t	3.6 h	1.5 f, i
			7440-36-0	Antimony			1.6 q	ne	1 f
				Thallium			0.040 q	ne	0.06 f, i
			7440-02-0	Nickel			0.052 t	562 h	38 f, i
			7440-62-2	Vanadium			0.02 o	82 h	1.6 f
			7440-66-6	Zinc			0.120 t	105 h	1230 f, i
			7440-22-4	Silver	0.002	0.000002	0.00012 q		
PCBs - Standard List	8082A		12674-11-2	PCB-1016	0.46	0.00046	ne	ne	13 f
			11104-28-2	PCB-1221	0.46	0.00046	0.00028 o		
			11141-16-5	PCB-1232	0.46	0.00046	0.00058 o		
			53469-21-9	PCB-1242	0.46	0.00046	0.000053 o	3.0 h	0.7 f
			12672-29-6	PCB-1248	0.46	0.00046	0.000081 o		
			11097-69-1	PCB-1254	0.46	0.00046	0.000033 o	1.3 h	0.3 f
			11096-82-5	PCB-1260	0.46	0.00046	0.094 o		
Dioxins & Furans, 17 Isomers List	8290A		1746-01-6	2,3,7,8-TCDD (dioxin)	10	0.01	ne	$1.0x10^{-4}$ h	$7.6x10^{-6}$ f
			40321-76-4	1,2,3,7,8-PeCDD	52	0.052			
			57117-41-6	1,2,3,7,8-PeCDF	52	0.052			
			57117-31-4	2,3,4,7,8-PeCDF	52	0.052			
			39227-28-6	1,2,3,4,7,8-HxCDD	52	0.052			
			57653-85-7	1,2,3,6,7,8-HxCDD	52	0.052			
			19408-74-3	1,2,3,7,8,9-HxCDD	52	0.052			
			70648-26-9	1,2,3,4,7,8-HxCDF	52	0.052			
			57117-44-9	1,2,3,6,7,8-HxCDF	52	0.052			
			72918-21-9	1,2,3,7,8,9-HxCDF	52	0.052			
			60851-34-5	2,3,4,6,7,8-HxCDF	52	0.052			
			35822-46-9	1,2,3,4,6,7,8-HpCDD	52	0.052			
			67562-39-4	1,2,3,4,6,7,8-HpCDF	340	0.34			
			55673-89-7	1,2,3,4,7,8,9-HpCDF	400	0.4			
			3268-87-9	OCDD	100	0.1			
			39001-02-0	OCDF	100	0.1			
			51207-31-9	2,3,7,8-TCDF	10	0.01			
Perfluorinated compounds	537 (modified)		-	N-ethyl perfluorooctanesulfonamidoacetic acid		0			
			-	N-methyl perfluorooctanesulfonamidoacetic acid		0			
			375-73-5	Perfluorobutanesulfonic acid		0			
			335-76-2	Perfluorodecanoic acid		0			
			307-55-1	Perfluorododecanoic acid		0			
			375-85-9	Perfluoroheptanoic acid		0			
			355-46-4	Perfluorohexanesulfonic acid		0			
			307-24-4	Perfluorohexanoic acid		0			
			375-95-1	Perfluorononanoic acid		0			
			1763-23-1	Perfluorooctanesulfonic acid		0			
			335-67-1	Perfluorooctanoic acid		0			
			376-06-7	Perfluorotetradecanoic acid		0			
			72629-94-8	Perfluorotridecanoic acid		0			
			2058-94-8	Perfluoroundecanoic acid		0			
% moisture									

Appendix A – Health and Safety Plan

AKANA SITE SPECIFIC HEALTH AND SAFETY PLAN
NORTHWEST METALS, INC.
REMOVAL ACTION

Akana has adopted the following Site Specific Health & Safety Plan for activities associated with the DEQ removal action order issued on March 27, 2018 issued to Northwest Metals, Inc. (NW Metals). The site is located at 7600 NE Killingsworth Street, Portland, Oregon. All work will be done in general accordance with 29 CFR 1910.120 and OAR 437-02-100 et seq. and all other applicable State and Federal worker health and safety regulations.

This document outlines Akana's site specific health and safety plan and is to be read and signed by all Akana project workers and subcontractors.

1 Job Execution Goal

Implement the Project in a safe, efficient manner without incident to personnel, property, environment, or the community.

- ✓ No Injury
- ✓ No Illness
- ✓ No Environmental Excursion
- ✓ No Work Permit Violation
- ✓ Incident Free Job Execution
- ✓ Drug Free Workplace

The following **Site Specific Health & Safety Plan (SS-HASP)** has been developed for the NW Metals removal action project. All Akana employees and subcontractors will review and familiarize themselves with this **SS-HASP** prior to commencement of project work.

Akana shall perform their work in accordance with standards, drawings and other data as released by NW Metals and approved by DEQ.

2 Site Location

The site is located at 7600 NE Killingsworth Street, Portland, Oregon.

3 Scope of Work

This plan pertains to removal action work required to manage, analyze, and properly dispose and/or recycle various waste streams at the site. The recyclable material/waste streams include car bodies, destroyed car shredder, debris and surficial soil.

The purpose of the SS-HASP is to provide communication to all personnel involved with the removal action that is being performed to delineate and/or define potential hazards existing at the site.

Work performed for this project will include moving car bodies and other recyclable materials which were impacted by the fire. This will allow access to debris material and surficial soils (< 3-inches). Debris material will be tested, containerized, and stored on-site pending analytical results which will determine appropriate disposal requirements. Surficial soil samples will be collected and sent for laboratory analysis to determine if further action is required. Recyclable material will be stored on-site and processed once a new on-site shredding system has been installed and commissioned. The destroyed shredder will be dismantled and shipped off for recycling.

Akana will establish decontamination zones that will be relocated throughout the project as the sampling locations advance with collection progress. Does Chris have a current HAZWOPER certificate?

Akana field staff will decontaminate all personnel and equipment before sampling as per the sampling plan and prior to moving to another sampling location to minimize the risk of cross contamination

Any work performed outside of the scope outlined in this SS-HASP must be approvedin writing by the Akana Health & Safety Manager prior to commencement of work.

4 Site Safety Officer Responsibilities

The most senior Akana staff onsite is the designated Site Safety Officer (SSO).The SSO shall monitor the activities of equipment and personnel at the project work site. The SSO's responsibilities will include the following:

A. Ensuring that all Akana workers are properly trained and that all have read the SS-HASP.

B. Keep a written log of on-site activities and events.

C. Reporting and documenting of all injuries,safety incidents, and near misses in accordance with the Akana Environmental, Health and Safety Manual.

D. Conduct and document daily Toolbox Safety Meetings.

E. Conduct Weekly Safety Meeting utilizing safety topic relevant to the project.

F. Ensure a job safety analnsis (JSA)- is completed and reviewed by each work crew.

G. Serve as site liaison with Akana EHS Manager.

5 Incident Reporting

All incidents must be reported immediately to the client, the Akana SSO, and Akana EHS Manager. In accordance with Akana EHS Policy, all incidents will be reported immediately to Akana's EHS Manager verbally. A written incident report shall be submitted to the Akana EHS Manager within 24-hours.

Akana will notify the client representative of all job site incidents involving the following:

A. OSHA recordable accidents

B. Vehicle accidents

C. Incidents involving equipment damage

D. Spills of hazardous materials

E. Fires

F. Near misses that had the potential to cause injuries, property damage, or a release to the environment.

Notification, either in person or by telephone, will be made as soon as possible and, without exception, prior to the end of the workday to the client.

6 Enforcement

It is the responsibility of the Akana SSO to enforce the SS-HASP. The client project manager or his/her designated representative has full authority to enforce the job site safety policies. The Akana SSO will immediately correct any observed or reported safety violations. Repeated safety violations may lead to the removal of the Akana employee from the job site. Certain violations, such as fighting or use of illegal substances may result in immediate dismissal.

7 General Job Safety

A. Anyone under the influence of drugs or intoxicating substances shall not be allowed on the job site.

B. No one shall be permitted or required to work while the person's ability or alertness is impaired by fatigue, illness, medications, or other conditions that expose the employee or others to injury.

C. Horseplay, scuffling, fighting, or possession of illegal drugs, alcohol, firearms, or explosives is prohibited.

D. Report any hazardous conditions immediately to the Akana SSO who will report to the client representative.

E. Do not block or obstruct aisles, doors, stairways, fire extinguishers, or emergency exits.

F. Personal protective equipment (PPE) must be inspected prior to use.

G. Do not handle or tamper with electrical equipment, machinery, air/water lines, or chemicals if it is not within the scope of your duties.

H. Machinery shall not be serviced, repaired or adjusted while in operation.

I. Do not throw objects from heights.

8 Medications/Alcohol/Smoking

Medications and alcohol can increase or exaggerate the effects from exposure to toxic chemicals. Personnel who take medications (including herbal supplements) will inform their physician of the type of work to be performed, the potential for exposure to specific hazardous materials, and follow their physician's guidance.

Alcoholic beverage intake is prohibited on-site and should be minimized offsite. The use of alcohol, illegal drugs or abuse of controlled or intoxicating substances is prohibited on-site. Person(s) found using alcoholic beverages, illegal drugs, or abusing controlled or other intoxicating substances, or found to be intoxicated while on-site will be subject to disciplinary action, up to and including permanent expulsion from the job site.

Smoking and use of tobacco is prohibited within decontamination areas at all times. Site personnel may only use tobacco products in designated areas.

9 Site Evacuation and Emergency Procedures

In the event of an emergency that necessitates the evacuation of the site, such as a chemical release, fire, or explosion, Akana personnel will implement the following procedures:

A. Akana personnel will be alerted by direct verbal communication or hand movements and three (3) blasts from an air horn.

B. Akana personnel in the exclusion zone may or may not perform field decontamination prior to leaving the exclusion zone, depending on the nature of the incident requiring the evacuation. In the event of a fire or explosion, these individuals will evacuate to either the primary or secondary meeting point (location will be upwind based on prevailing wind direction).

C. Once personnel have evacuated to the designated meeting point, the Akana SSO will perform a head count.

10 Back Safety

Back injuries are common and debilitating. To avoid injuring your back, observe the following lifting precautions:

A. Know the approximate weight of the load to be lifted.

B. Lift with the leg muscles not the back.

C. The maximum permissible load for one person is 40 lbs.

D. Always seek assistance when lifting heavy, bulky objects – don't try to do it on your own.

11 Barriers and Warning Signs

A. Barriers must be placed around safety hazards such as open excavations or areas where heavy equipment is in use. Barriers must be sturdy and obvious to site workers and the general public.

B. Warning signs must be placed on or near safety hazards. "Danger" signs must be used wherever an imminent hazard is present. "Caution" signs must be used wherever potentially unsafe conditions exist.

C. Safety instruction signs must be used wherever additional safety instructions regarding hazards are appropriate.

12 Chemical Hazards

The contaminants of concern associated with contaminated soils and debris include:

- Total Petroleum Hydrocarbons;
- Volatile Organic Compounds such as Benzene, Ethylbenzene, Toluene, Xylenes, Trichloroethene, Napthalene;
- Semi-Volatile Organic compounds such as 2-Methylnapthalene, Acenapthene, Fluorene, Fluoranthene, Coal Tar Pitch Volatiles (Anthracene, Benz(a)anthracene, Benzo(a)pyrene, Chrysene, Phenanthrene, Pyrene), Benzo(k)fluoranthene, Benzo(g,h,i)perlyene, Benzo(b)fluoranthene, Indeno(1,2,3-cd)pyrene;
- PCBs;
- Metals;
- Dioxin Furans;
- Perfluorinated Compounds.

Table 2-1 lists the chemicals, associated hazards, threshold limit values (TLVs), and/or permissible exposure limits (PELs), routes of exposure, and signs and symptoms of exposure. This information covers potential toxic effects that could occur if relatively significant acute and/or chronic exposure were to happen.

TABLE 1-1
CHEMICAL HAZARDS ASSESSMENT

Chemical Hazard	Exposure Limits	Routes of Exposure	Signs and Symptoms
Benzene	OSHA PEL-TWA = 1 ppm	inhalation, skin absorption, ingestion, skin and/or eye contact	Irritation to eyes, skin, nose, respiratory system; dizziness; headache, nausea, staggered gait; anorexia, lassitude (weakness, exhaustion); dermatitis; bone marrow depression; potential occupational carcinogen
Ethylbenzene	OSHA PEL-TWA = 100 ppm	inhalation, ingestion, skin and/or eye contact	Irritation to eyes, skin, mucous membrane; headache; dermatitis; narcosis, coma
Toluene	OSHA PEL-TWA = 100 ppm	inhalation, skin absorption, ingestion, skin and/or eye contact	Irritation to eyes, nose; lassitude (weakness, exhaustion), confusion, euphoria, dizziness, headache; dilated pupils, lacrimation (discharge of tears); anxiety, muscle fatigue, insomnia; paresthesia; dermatitis; liver, kidney damage
Xylenes	OSHA PEL-TWA = 100 ppm	inhalation, skin absorption, ingestion, skin and/or eye contact	Irritation to eyes, skin, nose, throat; dizziness, excitement, drowsiness, incoordination, staggering gait; corneal vacuolization; anorexia, nausea, vomiting, abdominal pain; dermatitis
Trichloroethene	OSHA PEL-TWA = 100 ppm	inhalation, skin absorption, ingestion, skin and/or eye contact	Irritation to eyes, skin; headache, visual disturbance, lassitude (weakness, exhaustion), dizziness, tremor, drowsiness, nausea, vomiting; dermatitis; cardiac arrhythmias, paresthesia; liver injury; potential occupational carcinogen
Naphthalene	OSHA PEL-TWA = 10 ppm	inhalation, ingestion, skin and/or eye contact	Hemolytic anemia, nausea, vomiting, diarrhea, irritation to nose and respiratory system, potential human carcinogen
2-Methylnapthalene	OSHA PEL = not established	Inhalation, skin and/or eye contact	Irritation to eyes, skin and respiratory system.
Acenaphthene	OSHA PEL = not	Inhalation, skin absorption and	Irritation to skin, eyes, nose and throat;

Chemical Hazard	Exposure Limits	Routes of Exposure	Signs and Symptoms
	established	ingestion	
Dibenzofuran	OSHA PEL = not established	Inhalation, skin absorption	Irritation to skin, eyes, nose and throat
Fluorene	OSHA PEL = not established	Inhalation, skin and/or eye contact	Irritation to skin, eyes, nose and throat
Fluoranthene	OSHA PEL = not established	Inhalation, skin and/or eye contact, ingestion	Irritation to skin, eyes and respiratory system
Coal Tar Pitch Volatiles (Anthracene, Benz(a)anthracene Benzo(a)pyrene, Chrysene, Phenanthrene, Pyrene)	OSHA PEL-TWA = 0.2 mg/m^3	Inhalation, skin and/or eye contact	Dermatitis, bronchitis; potential occupational carcinogen Note: benzene extractable method
Benzo(k)fluoranthene	OSHA PEL = not established	Inhalation, ingestion	Probable human carcinogen
Benzo(g,h,i)perylene	OSHA PEL = not established	Inhalation, ingestion	Information not available.
Benzo(b)fluoranthene	OSHA PEL = not established	Inhalation	Probable human carcinogen.
Indeno(1,2,3-cd) pyrene	OSHA PEL = not established	Inhalation, ingestion	Probable human carcinogen.
Metals			
Silver	OSHA PEL-TWA = 0.01 mg/m^3	Inhalation, ingestion, skin and/or eye contact	Blue-gray eyes, nasal septum, throat or skin irritation, ulceration skin, gastrointestinal (GI) disturbance
Arsenic	OSHA PEL-TWA = 0.01 mg/m^3	Inhalation, ingestion, skin and/or eye	Ulceration of nasal septum, dermatitis, GI disturbances, peripheral neuropathy, resp irritation, skin hyperpigmentation,

Chemical Hazard	Exposure Limits	Routes of Exposure	Signs and Symptoms
		contact, skin adsorption	(potential occupational carcinogen)
Beryllium	OSHA PEL-TWA = 0.002 mg/m^3	Inhalation, skin and/or eye contact	Berylliosis (chronic exposure, anorexia, weight loss, lassitude (weakness exhaustion), chest pain, cough, clubbing of fingers, cyanosis, pulmonary insufficiency, eye irritation, dermatitis, (potential occupational carcinogen)
Cadmium	OSHA PEL-TWA = 0.005 mg/m^3	Inhalation, ingestion	Pulmonary edema, dyspnea, cough, chest tightness, substernal pain, headache, hills, muscle aches, nausea, vomiting, diarrhea, anosmia, emphysema, proteinuria, (potential occupational carcinogen)
Chromium	OSHA PEL-TWA = 1.0 mg/m^3	Inhalation, ingestion, skin, skin and/or eye contact	Irritation eyes, skin, lung fibrosis
Copper	OSHA PEL-TWA = 1.0 mg/m^3	Inhalation, ingestion, skin, skin and/or eye contact	Irritation eyes, nose pharynx, nasal septum perforation, metallic taste, dermatitis
Mercury	OSHA PEL-TWA = 1.0 mg/m^3	Inhalation, skin absorption, ingestion, skin and/or eye contact	Irritation eyes, skin, cough chest pain, dyspnea, bronchitis, pneumonitis, tremor, insomnia, irritability, indecision, headache, lassitude, stomatitis, salivation, GI disturbance, anorexia, weight loss, proteinuria
Nickel	OSHA PEL-TWA = 1.0 mg/m^3	Inhalation, ingestion, skin, skin and/or eye contact	Sensitization dermatitis, allergic asthma, pneumonitis, (potential occupational carcinogen)
Lead	OSHA PEL-TWA = 0.05 mg/m^3	Inhalation, ingestion, skin, skin and/or eye contact	Lassitude, insomnia, facial pallor, anorexia, weight loss, malnutrition, constipation, abdominal pain, colic, anemia, gingival lead lin, tremor, paralysis wrist, ankles, encephalopathy, kidney disease, irritation eyes, hypertension
Antimony	OSHA PEL-TWA =	Inhalation, ingestion, skin,	Irritation eyes, skin, nose, throat, mouth, cough, headache, nausea,

Chemical Hazard	Exposure Limits	Routes of Exposure	Signs and Symptoms
	0.5 mg/m^3	skin and/or eye contact	vomiting, diarrhea, stomach cramps, insomnia, anorexia, unable to smell properly
Selenium	OSHA PEL-TWA = 0.2 mg/m^3	Inhalation, ingestion, skin, skin and/or eye contact	Irritation eyes, skin, nose, throat, visual disturbance, headache, chills, fever, dyspnea, bronchitis, metallic taste, garlic breath, GI disturbance, dermatitis, eye, skin burns
Thallium	OSHA PEL-TWA = 0.1 mg/m^3	Inhalation, ingestion, skin, skin and/or eye contact, skin absorption	Nausea, diarrhea, abdominal pain, vomiting, ptosis, strabismus, peri neuritis, tremor, retrosternal tightness, chest pain, pulmonary edema, convulsions, chorea, psychosis, liver, kidney damage, alopecia, paresthesia legs
Zinc	OSHA PEL-TWA = 15 mg/m^3 (Total Dust)	Inhalation	Lassitude (weakness, exhaustion), metallic taste, headache, blurred vision, low back pain, vomiting malaise, chest tightness, dyspnea, rales, decreased pulmonary function
PCB's (General)	OSHA PEL-TWA = 1.0 mg/m^3	Inhalation, ingestion, skin, skin and/or eye contact, skin absorption	Irritation eyes, chloracne, liver damage, reproductive effects, (potential occupational carcinogen)
Dioxin Furans (General)	OSHA PEL-TWA = 1.0 mg/m^3	Inhalation, ingestion, skin, skin and/or eye contact, skin absorption	Irritation eyes, chloracne, liver damage, reproductive effects, (potential occupational carcinogen)
Perfluorinated Compounds	Obtain SDS from Portland Fire Bureau		

Notes:

CNS central nervous system
IDLH concentration at which chemical hazard is immediately dangerous to life and health
OSHA Occupational Safety and Health Administration
ppm parts per million
PEL permissible exposure limit
TWA time-weighted average (8 hours)

13 Physical Safety Hazards and Control Measures

TABLE 1-2
PHYSICAL HAZARDS ASSESSMENT

Physical Hazard	Control Measure
Rotating Mechanisms on the drilling rig	Employee will keep clear of drill rig unless accompanied by licensed driller. Wear bright ANSI/ISEA 107-2010 compliant class 3 Level 2 safety vest for visibility.
Noise	Hearing protection must be worn in wherever noise levels exceed 85 dBA.
Spark/flare	. Fire extinguisher must be available around all hot work.
Dermal contact with COCs	Employees will wear protective clothing, boots and gloves(if necessary).
Ingestion of COCs	Employees will wash hands and face thoroughly before eating or drinking.
Mechanical – Slip-Trip-Fall	Walk cautiously; keep waste and equipment clear of work area when not in use. Keep aware of physical surroundings, keep work area clean.
Ticks and mosquitoes	Wear sleeves and pants. Consider wearing insect repellant.
Heat Stress	• Establish a work/rest schedule • Know signs/symptoms of heat illnesses; monitor self/coworkers. • Block out direct sun or other heat sources. • Use cooling fans/air-conditioning; rest regularly. • Drink lots of water; about 1 cup every 15 minutes. • Wear lightweight, light colored, loose-fitting clothes. • Avoid alcohol, caffeinated drinks, or heavy meals.

14 Environmental Spill

If a chemical spill occurs:

A. Report the spill immediately to the Akana SSO who will notify the Akana EHS Manager. The Akana SSO will implement spill response activities and alert a cleanup crew. The Akana SSO will notify the client and regulatory authorities if applicable..

B. If the spill creates immediate danger to life or health (e.g., cloud, fire, etc.) alert all site personnel by direct verbal communication, hand movements or air horn.

C. Do not touch or walk through spilled materials.

D. Keep combustibles (wood, paper, oil) away from spilled materials.

E. Turn off all electrical equipment in the spill area.

15 Equipment Inspections

The following equipment must be inspected daily (written inspection records not required):

A. Tools

B. PPE

16 Eye & Face Protection

A. Safety glasses with side shields must be worn at all times while on the project site.

B. If working around liquid chemicals, chemical splash goggles as well as a face shield shall be worn at all times.

17 Fire extinguishers

A. Only use ABC rated fire extinguishers.

B. Fire extinguishers must be visually checked to ensure that they are fully charged and operable.

18 Fire Fighting

A. In the event of a fire, the Akana SSO will call 911 immediately and notify the client's onsite representative.

B. Akana personnel will only attempt to fight a fire in the incipient stages. Akana staff will not attempt to fire a fully developed fire.

C. NEVER USE WATER TO EXTINGUISH FIRES ON ELECTRICAL EQUIPMENT, GASOLINE, OIL, OR GREASE.

D. Remember **PASS**:

Pull the pin to unlock the operating lever.
Aim low, pointing the nozzle or hose at the base of the fire.
Squeeze the handle to release the extinguishing agent.
Sweep from side to side until the flames are out.

E. After extinguishing, a fire watch should be maintained for approx. **30** minutes in case of re-ignition.

F. If the fire cannot be put out with an extinguisher, notify the local fire authorities and others within the immediate area and evacuate the area immediately.

19 Fire Prevention

A. Combustible scrap, debris, and waste materials (paper, wood shavings etc.) must be cleaned up daily, before the end of the work shift. Oily rags must be placed in covered metal containers. .

B. Keep all work areas, particularly around electrical machinery, clear of litter.

C. Immediately clean up minor spilled oil or solvents.

D. Never use compressed air around open flames, fuels, oil, or grease.

E. Flammable liquids, gases, or dusts must not be used near open flames, sparks, incandescent surfaces, or other sources of ignition.

F. All electrical circuits must be protected by the correct capacity fuse or circuit breaker.

G. Unplug electrical equipment not in use at the end of the workday.

H. Stored materials must be compatible.

   a. Compatible means they don't react violently on contact, such as oxidizers and petroleum products.
   b. They should also be readily accessible and secured so they are not accidentally knocked over.

I. Always take precautions to prevent fires particularly from oily waste, rags, gasoline, flammable liquids, acetylene torches, improperly installed electrical equipment and trash.

J. Never use gasoline or flammable solvents for cleaning purposes.

K. Smoking is not prohibited within **25** feet of flammable substances.

20 Flammable and Combustible Materials/Liquids

A. Keep flammable and combustible materials or liquids to a minimum. Bring on site only enough to complete the day's work.

B. Oily rags must be stored in covered metal receptacles and removed from the worksite daily.

C. Flammable liquids must be stored in approved, self-closing, non-combustible, metal containers. Such containers must be labeled with the word "FLAMMABLE" in large letters.

D. Storage in excess of **25** gallons of flammable liquids or **60** gallons of Class III combustible liquids must be within cabinets complying with the requirements of NFPA 30.

E. Flammable liquids may be used only in areas where there are no flames or other sources of ignition.

F. Do not drag containers labeled "Flammable."

21 Housekeeping

A. It is expected that all Akana personnel and subcontractors will practice good housekeeping procedures while at the project site.

B. Housekeeping should be an ongoing process and not relegated to the end of the day.

C. All Akana employees and subcontractors are required to observe the following practices:

1. Keep work areas free of debris, waste, and combustible materials. Scrap is to be removed and deposited in proper waste containers at least daily.
2. Work areas are to be kept clean and orderly. Tools, wires, supplies, materials and loose objects are not to be left in disorder during the work day, at the conclusion of the work day, or at the end of the project.
3. Keep materials and equipment out of aisles, passageways, and off stairways.
4. Keep floors dry; avoid spilling liquids; wipe up all spills immediately.
5. Spilled liquids or other materials must be cleaned up immediately.

22 JSA

A. No task will begin without a completed job safety analysis (JSA) on hand. A JSA is required to be performed by each work crew prior to the work being performed.

B. No work will be started until hazards have been identified and controlled by the work crew. If hazards still exist, stop work, modify the JSA, control hazards, communicate, and then proceed.

23 Ladders

A. No Akana personnel will perform work requiring the use of ladders.

B. If the scope of work changes, the Akana EHS Manager shall be notified for coordination of appropriate training and equipment.

24 Pedestrians/ Walking Safety

A. Use walkways and sidewalks where provided.

B. Do not walk in front or behind any vehicle that is maneuvering to pick up or lower a load.

C. Do not walk behind a vehicle attempting to back up. The driver may not see you.

D. Do not stop to talk to another person while you are in a vehicle roadway. Step to the side to prevent vehicles from having to maneuver around you.

E. Walk around areas where overhead work is in progress or areas, which have been barricaded.

F. Be alert to traffic conditions around you.

25 Personal Protective Equipment

All Akana staff and subcontractors working on site must wear the following minimum required personal protective equipment:

A. Hard-hat that meets the requirements of ANSI Z89.1 Class B or E.

B. Safety glasses shall be worn at all times.

   i. Safety glasses must be worn with side shields that meet the ANSI Z87.1 standard.

C. Goggles for chemical splash protection must be mounted on hardhats so that they are readily available.

D. Workers must wear ANSI/ASTM approved safety toed boots with puncture resistant soles.Boots must be constructed of durable material and cover the wearer's ankles.

   i. No soft shoes (jogging, tennis, loafers) are permitted on site.

E. Approved Class 2 safety vest must be worn at all times while on the site.

F. Akana staff and subcontractors must wear:

   i. Either coveralls or sleeved shirts worn with full length trousers are acceptable.
   ii. shirts with sleeves buttoned at all times.
   iii. Additional clothing requirements may be necessary depending on the work area.

G. Hearing protection is required to be worn in high noise level areas.

H. Chemical resistant gloves such as barrier laminate, butyl rubber, nitrile rubber or Viton must be worn when handling potentially contaminated materials.

I. No extremely long hairstyles shall be permitted on the job site unless properly secured to prevent entanglement in machinery and equipment.

26 Respiratory Protection

A. Respiratory protection will not be required. However, if vapors or mists exceed acceptable levels, leave the site and contact the Akana EHS Manager.

B. If the scope of work changes, the Akana EHS Manager shall be notified for coordination of appropriate training and equipment.

27 Safe Vehicle Operation

A. Akana personnel must comply with all Akana and State of Oregon vehicle operations requirements.

B. Akana personnel must comply with the Akana policy prohibiting texting while driving. Texting or text messaging means reading from or entering data into any handheld or other electronic device, including SMS texting, e-mailing, instant messaging, obtaining navigational information, or engaging in any other form of electronic data retrieval or electronic data communication.

C. Only properly maintained and operating vehicles and equipment are allowed on site. Brakes, lights, horn, tires, steering, windshield wipers, alarms etc. must function properly.

D. All vehicle occupants must properly use seat belts and any other required safety equipment at all times during vehicle operations.

E. Travel the most direct and safest route; observe all traffic laws.

F. Pedestrians always have the right-of-way. Always assume that pedestrians cannot see you.

G. Observe posted speed limits and do not travel faster than is safe for conditions.

H. Report all motor vehicle accidents to the Akana SSO and the client representative.

I. Do not leave the scene of an accident in which you are involved, unless injured, without reporting to your supervisor.

J. Make sure loads on trucks are securely tied down and properly marked.

K. Vehicles should be carefully loaded to prevent loss, damage, or injury from falling objects. Any object that may fall off must be packed, tied, or otherwise secured.

28 Training

A. All personnel assigned to work on site will be provided a copy of this SS-HASP prior to entering the site for field work. They will be asked if they understand or have any questions with the requirements in the SS-HASP. Akana subcontractors that will be working on-site will also be required to comply with their company's and Akana's SS- HASP while on-site.

B. Work shall not be performed unsupervised unless worker has been properly trained and that training has been verified.

29 Emergency Phone Numbers

Akana Company Representatives

Akana EHS Manager Bill Renfroe Portland, OR Phone 503-939-2096 bill.renfroe@akana.us	Project Manager and Onsite Supervisor Terry Hosaka Portland, OR Phone: 360-609-3504 Terry.hosaka@akana.com

Client Representatives:

911	Emergency #
(503) 225-9010	Non-Emergency #
(503) 228-5153	DEQ Project Manager – Mike Greenburg
(503) 367-6955	Client Representative – Mo Anotta

Clinics/Hospitals –

- FOR EMERGENCIES AND IMMEDIATE MEDICAL TREATMENT
  Use the following hospital/emergency room:

Nearest Emergency Rooms:

Portland Adventist
10123 SE Market St, Portland, OR 97216

Appendix A contains maps and routes to nearest emergency rooms for each of these three different location on the project.

- FOR NON-LIFE THREATENING PHYSICIAN OCCUPATION INJURY REVIEW AND TREATMENT
  Use the following clinic: Contact Akana Safety coordinator to schedule a visit to proximate occupational health clinic.

Approved By: Bill Renfroe, Corporate Safety Director

Signature:

Date: _____ , 2018

SITE SAFETY SIGNATURE SHEET

The following site personnel have read the Site Specific Health and Safety Plan and are familiar with its provisions.

NAME (print)	SIGNATURE	DATE

Plan reviewed by: Bill Renfroe, Corporate Safety Director

Project # 18-024

ATTACHMENT A
Maps & Routes To Nearest Hospital

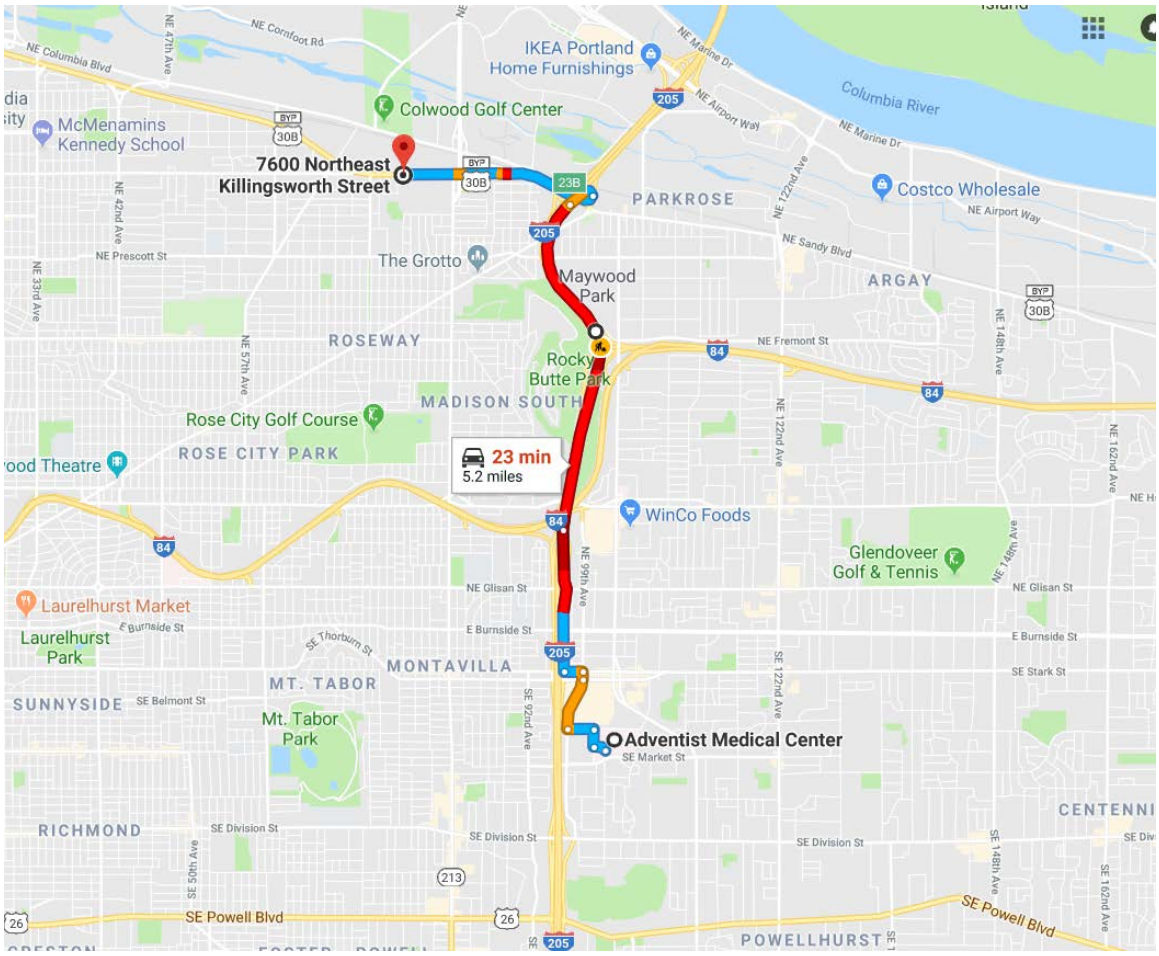
7600 Northeast Killingsworth Street
Adventist Medical Center
23 min
5.2 miles
IKEA Portland Home Furnishings
Colwood Golf Center
McMenamins Kennedy School
Columbia River
Costco Wholesale
PARKROSE
ARGAY
The Grotto
Maywood Park
ROSEWAY
Rocky Butte Park
MADISON SOUTH
Rose City Golf Course
ROSE CITY PARK
WinCo Foods
Glendoveer Golf & Tennis
Laurelhurst Market
Laurelhurst Park
MONTAVILLA
MT. TABOR
SUNNYSIDE
Mt. Tabor Park
RICHMOND
POWELLHURST
NE Columbia Blvd
NE Cornfoot Rd
NE Marine Dr
NE Airport Way
NE Sandy Blvd
NE Prescott St
NE Fremont St
NE Glisan St
E Burnside St
SE Stark St
SE Thorburn St
SE Belmont St
SE Market St
SE Division St
SE Powell Blvd
NE 42nd Ave
NE 33rd Ave
NE 57th Ave
NE 47th Ave
NE 122nd Ave
NE 148th Ave
NE 162nd Ave
NE 99th Ave
SE 92nd Ave
SE 122nd Ave
SE 148th Ave
SE 162nd Ave
SE 50th Ave
205
84
30B
23B
213
26

ATTACHMENT C
Job Safety Analysis (JSA) Forms

ATTACHMENT D
Near Miss Reporting Forms

Appendix B – Quality Assurance Project Plan

Table of Contents

1 Introduction 1
2 Project Management 1
2.1 Project/Task Organization 1
2.2 Coordination 2
2.3 Training 2
2.4 Document Retention 2
3 Quality Assurance Objectives for Data Management 3
3.1 Data Quality Objectives 3
3.2 Criteria for Data Measurement 3
3.3 Sensitivity 3
3.3.1 Precision 3
3.3.2 Accuracy 4
3.3.3 Representativeness 4
3.3.4 Comparability 4
3.3.5 Completeness 4
4 Sampling Requirements 5
4.1 Sample Design and Methods 5
4.2 Field Data Management 5
4.2.1 Field Measurements and Observations 5
4.2.2 Photographs 6
4.2.3 Corrections 6
4.3 Sample Handling and Custody 6
4.3.1 Containers 6
4.3.2 Sample Identification 6
4.3.3 Storage and Shipment 7
4.3.4 Chain of Custody 7
4.4 Quality Control Samples 8
4.4.1 Field Duplicates 8
4.4.2 Rinsate Blanks 9
4.4.3 Field Blank 9
4.4.4 Trip Blanks 9
4.5 Equipment Maintenance 9
4.5.1 Preventive Maintenance 9
4.5.2 Calibration 10
5 Analytical Requirements 10

5.1 Methods **10**
5.2 Laboratory Operations **11**
5.2.1 Laboratory Custody Procedures **11**
5.2.2 Preventive Maintenance **11**
5.2.3 Calibration **11**
5.2.4 Corrective Action **12**
5.3 Quality Control Samples **12**
5.3.1 Method Blanks **12**
5.3.2 Laboratory Control Samples **12**
5.3.3 Calibration Blanks **13**
5.3.4 Surrogates **13**
5.3.5 Matrix Spikes **13**
5.3.6 Matrix Spike Duplicates **13**
5.3.7 Laboratory Duplicates **13**
5.3.8 Laboratory Control Sample Duplicates **14**
5.4 Documentation **14**
6 Assessment and Oversight **15**
6.1 Response Actions **15**
6.2 Corrective Actions **15**
6.3 Reporting **15**
7 Data Validation and Usability **16**
7.1 Data Reduction and Review **16**
7.2 Data Validation **17**
7.2.1 Sampling Procedure Review **17**
7.2.2 Analytical Data Validation **17**
7.3 Quality Assurance Reporting **18**
8 Audits **18**
References **19**

LIST OF TABLES

Table 1 Summary of Sample Containers and Preservatives *(refer to Removal Action Plan, Table 1)*
Table 2 Analytical Method and Quantitation Limit Goals *(refer to Removal Action Plan, Table 2)*

LIST OF FIGURES

Figure 1 Site Location Map *(refer to Removal Action Work Plan, Figure 1 – Site Location Map)*

LIST OF ACRONYMS

µg/kg	Micrograms per Kilogram
µg/L	Micrograms per Liter
ARRA	American Recovery and Reinvestment Act
Business Oregon	Oregon Business Development Department
CMGC	Construction Manager/General Contractor
COPC	Constituents of Potential Concern
DEQ	Oregon Department of Environmental Quality
DOT	U.S. Department of Transportation
DQOs	Data Quality Objectives
DUSR	Data Usability Summary Report
EPA	U.S. Environmental Protection Agency
GC	Gas Chromatographs
HASP	Health and Safety Plan
IATA	International Air Transport Association
LCSs	Laboratory Control Samples
mg/kg	Milligrams per Kilogram
mg/L	Milligrams per Liter
MRL	Method Reporting Limit
MRLG	Method Reporting Limit Goal
MS	Matrix Spike
MSD	Matrix Spike Duplicate
NMC	Natt McDougall Company
PAHs	Polynuclear Aromatic Hydrocarbons
PIDs	Photoionization Detectors
Port	Port of Newport
ppm	Parts per Million
QA	Quality Assurance
QAPP	Quality Assurance Project Plan
QC	Quality Control
RBCs	Risk-Based Concentrations
RBSLs	Risk-Based Screening Levels
RLF	Brownfield Revolving Loan Fund Grant
RPD	Relative Percent Difference
RSLs	Regional Screening Levels
SAP	Sampling and Analysis Plan
SLVs	Screening Level Values
SOPs	Standard Operating Procedures
TCLP	Toxic Characteristic Leaching Procedure
VOA	Volatile Organic Analyte
VOCs	Volatile Organic Compounds

1 Introduction

This Quality Assurance Project Plan (QAPP) presents the quality assurance (QA) and quality control (QC) activities for removal action activities planned for the Northwest Metals, Inc. (NW Metals) site located on Northeast Killingsworth Street in Portland, Oregon. The goal of these activities is to verify removal of hazardous substances to meet remediation goals established for the project. This QAPP specifies project objectives; procedures for office, field, and laboratory documentation; and other QA requirements that will be used to obtain valid, representative field samples and measurements. This QAPP was prepared in accordance with the U.S. Environmental Protection Agency's (EPA's) *Quality Assurance Guidance*.

2 Project Management

On March 12, 2018 a fire involving a car shredder, salvage vehicles, and other related materials occurred at the Northwest Metals Inc. (NW Metals) facility located at 7600 NE Killingsworth Street in Portland, Oregon. Portland Fire and Rescue responded to the scene and established command and control of the facility during the response stage of the fire. Fire suppression activity was completed on March 13, 2018. A large car shredder, associated rubber conveyor belt, used vehicles, tires, plastics, and other materials were burned in the fire. The fire spread to a neighboring properties and burned two duplexes and a single family home. A significant amount of fire suppression water and foam were used to extinguish the fire. Potential releases of hazardous substances may have occurred due to the fire and spread fire suppression water running off site. The first phase of the removal action is limited to the management of remaining materials affected by the fire, analyzing for potential hazardous substances both in debris material and native soil, and disposition of contaminated media and recycling of burned vehicle shells.

2.1 Project/Task Organization

This section outlines the individuals directly involved with this project and their specific responsibilities.

DEQ Emergency Response Project Manager: Mr. Michael Greenburg is the DEQ Project Manager assigned to this project. Mr. Greenburg will provide DEQ review, either directly or through assignment, of work plans and deliverables.

NW Metals Chief Executive Officer and Secretary: Mr. Mo Anotta. Mr. Anotta represents NW Metals. NW Metals will be responsible for funding this phase of work. Mr. Anotta will also oversee all self-performed contractor work at the site.

Counsel for NW Metals: Mr. Adam Kimmell is of counsel for NW Metals. Mr. Kimmell will provide legal review of documents generated as part of this phase of work.

Counsel for FHA Holdings, Inc.: Messrs Chris Rich and Stephen Feldman of Perkins Coie, LLP are legal representatives of the property owner. Messrs Rich and Feldman will provide legal review of documents generated as part of this phase of work.

Akana Project Manager: Mr. Terry Hosaka is the Project Manager for Akana and will be the primary contact to the DEQ Project Manager. He will maintain primary responsibility for project quality, schedule, and budget; QA review of data; providing final review of all project deliverables; and serving as a technical resource throughout the project. Mr. Hosaka will also monitor project QA procedures to ensure compliance with this QAPP and, if any problems or deficiencies are observed, will facilitate appropriate corrective action.

2.2 Coordination

DEQ has issued an Administrative Order to NW Metals to complete a removal action at the site. NW Metals has retained Akana as their environmental consultant; and plans to self-perform contractor work for this phase of the project. As NW Metals consultant, Akana will coordinate field activities and keep the DEQ Project Manager apprised of project and field activities, issues that may affect project schedule or outcome, and any problems that are encountered. DEQ will provide project oversight. Before initiation of field activities, NW Metals will provide notification to local residents and the city, as appropriate.

2.3 Training

All field personnel present during sampling activities are required to be 40-hour Hazardous Waste Operations (HAZWOPER)-certified with subsequent 8-hour annual refreshers. Health and safety procedures for Akana personnel will be addressed in a site-specific HASP which will be prepared prior to initiation of field work at the site. Included in the HASP will be descriptions of anticipated chemical and physical hazards, required levels of protection, health and safety monitoring requirements and action levels, personal decontamination procedures, and emergency procedures.

2.4 Document Retention

Documents generated during this project will include work plans, reports, laboratory data sheets, correspondence, chain-of-custody documentation, logbooks, corrective action forms, referenced materials, and photographs. Hard and electronic copies (if originally prepared in electronic form) will be kept in a secure filing area for a minimum of 5 years after closure of the project. Copies of all deliverables will be provided to DEQ, NW Metals, and Perkins Coie. Copies of other documents will be made available on request.

3 Quality Assurance Objectives for Data Management

3.1 Data Quality Objectives

The data quality objectives (DQOs) for this project are to develop and implement procedures for obtaining and evaluating data of a specified quality that can be used to confirm or deny the presence of contaminants of concern, which may pose a risk to human health or the environment. To collect such information, analytical data must have an appropriate degree of accuracy and reproducibility, samples collected must be representative of actual field conditions, and samples must be collected and analyzed using unbroken chain-of-custody procedures. The DQO process for this project followed that described in the EPA document, *Guidance on Systematic Planning Using the Data Quality Objectives Process* (EPA 2006).

3.2 Criteria for Data Measurement

To meet DQOs, the overall QA objective for analytical data is to ensure that data of known and acceptable quality are provided. To achieve this goal, data must be reviewed for sensitivity, representativeness, comparability, accuracy, precision and completeness. These criteria, which are described below, are necessary attributes to ensure that analytical data are reliable, scientifically sound, and defensible. Each analytical result or set of results generated should be fully defensible in any legal action, whether administrative, civil, or criminal.

3.3 Sensitivity

Table 1 *(refer to Removal Action Plan, Table 1)* provides a summary of potential sample containers for each analysis, preservatives, and hold times. Analytical methods and quantitation or method reporting limit (MRL's) goals are summarized in Table 2 *(refer to Removal Action Plan, Table 2)*. Method reporting limits (MRLs) for each analytical method are based upon risk-based screening levels (RBSLs) for each analyte in media of concern. Risk based screening levels for this project are based on DEQ Ecological Screening Level Values (SLVs; DEQ 2001 and 2007). During laboratory procurement, analytical MRLs for each proposed analysis will be compared to the Method Reporting Limit Goals (MRLGs) to ensure that the data generated will be sufficient for meet MRLGs. MRLs are the lowest practical limits at which concentrations are quantified with the technology that is available at commercial laboratories. RBSLs for some compounds, however, are below analytical MRLs. In this case, the laboratory will be required to report detections below the MRL as an estimated quantity.

3.3.1 Precision

Precision is a measure of the reproducibility of data under a given set of conditions. Specifically, it is a quantitative measure of the variability of a group of measurements compared to their average value. For duplicate measurements, precision can be expressed as the relative percent difference (RPD). Analysis of field duplicate samples will serve to measure the

precision of sampling. Field and laboratory duplicate measurements will be carried out with approximately a 10 percent frequency for each sample matrix and for laboratory samples.

3.3.2 Accuracy

Accuracy is the agreement between the measured value and the true value. Accuracy depends on the magnitude of systematic (bias) and random (precision) errors in the measurement. Bias due to sample matrix effects will be assessed by spiking the samples with known standards and calculating the recovery for the standards. Matrix spikes will be used at a minimum frequency of one in 20 or one per sample set. Perfect accuracy is 100 percent recovery.

3.3.3 Representativeness

Representativeness is a measure of how closely the results reflect the actual concentration of the chemical parameters in the medium sampled. Sampling procedures as well as sample-handling protocols for storage, preservation, and transportation are designed to preserve the representativeness of the samples collected.

Field procedures will be implemented to reduce the potential contamination of samples, such as using decontaminated or disposable sampling equipment, laboratory-supplied jars, and jars with lids equipped with Teflon liners. Proper documentation will also confirm that protocols are followed. This helps to assure sample identification and integrity. Representativeness can be assessed qualitatively by the use of QC samples, such as rinsate, field, and trip blanks and duplicate field samples. These QC samples are discussed in Section 4.4.

3.3.4 Comparability

Comparability is a qualitative parameter expressing the confidence with which one data set can be compared with another. A DQO for this program is to produce data with the greatest possible degree of comparability. Comparability of the data will be assured by using EPA-defined procedures that specify sample collection, handling, and analytical methods.

3.3.5 Completeness

Completeness is defined as a measure of the amount of valid data obtainable from a measurement system compared to the amount that was expected to be obtained under normal conditions. It is important that appropriate QA procedures be maintained to ensure that valid data are obtained in order to meet project needs. For the data generated, the goal required for completeness for this project is 95 percent.

4 Sampling Requirements

4.1 Sample Design and Methods

The basis and scope of the proposed remedial activities are described in the main text of the Removal Action Work Plan (work plan). In general, samples will be collected for waste characterization/disposal and discharge monitoring purposes. A description of the types of materials which will be tested and field sampling methods are described in the work plan.

4.2 Field Data Management

4.2.1 Field Measurements and Observations

A field logbook will be used to document field measurement, daily activities, and observations. Documentation will be sufficient to enable participants to reconstruct events that occurred during the project accurately and objectively at a later time. The logbook will be bound, and all pages will be consecutively numbered. All entries will be made in waterproof ink, dated, and signed by the person conducting the work. Because the logbook is a complete documentation of field procedures, it will contain only facts and observations. Language is to be objective, clear, concise, and free of personal interpretation or terminology that might be misconstrued. At a minimum, the following data will be recorded in the logbook:

- Date and time of any activity
- Purpose and location of activity
- Weather conditions
- Description of sample reference point(s)
- Sample location, depth, volume, and identification number
- Field measurements made
- Calibration records for field instruments
- Relevant comments regarding field activities
- The signature of responsible personnel.

Field logbooks will be identified by the project name and a project-specific number, and stored in the field project files when not in use. Field logbooks will be photocopied after the

investigation, and photocopies will be stored in the permanent project files. After field activities are completed, logbooks will be stored in the permanent project file.

4.2.2 Photographs

Photographs will be taken as directed by the Akana Project Manager and at the discretion of the Field Technician. The following information will be noted in the logbook concerning photographs: date, location, and direction where photographs were taken; description of photographs taken; and reasons why photographs were taken. Upon film development or downloading of photographs, each roll or folder of photographs will be labeled as to their date and location/activity. After field activities are completed, hard copies of photographs will be stored in the permanent project file and electronic files will remain with the electronic project file.

4.2.3 Corrections

All original data are recorded in field notes using indelible ink. Documents will be retained even if they are illegible or contain inaccuracies that require correction. No pages will be removed for any reason. If an error is made on a document, the individual making the entry will correct the document by crossing a line through the error, entering the correct information, and initialing and dating the correction. Any subsequent errors discovered on a document will be corrected, initialed, and dated by the person who made the entry.

4.3 Sample Handling and Custody

4.3.1 Containers

Sample containers will be obtained directly from the analytical laboratory performing the analysis. Container type, number, volume, preservatives, and maximum sample holding times to extraction and/or analysis will be completed as specified by the respective EPA analytical methods. Table 1 *(refer to Removal Action Plan, Table 1)* includes a summary of the sample containers sizes, preservatives, and holding times for the project.

4.3.2 Sample Identification

A sample label will be affixed to the sample container which will be used to identify each sample collected in the field and to avoid the possibility of misidentification. The Field Technician will fill out each sample label using waterproof ink and specify on the label a unique field sample number, project number, the sample date and time, sampler initials, analysis required, and preservation (when applicable). To minimize handling of sample containers, labels will be completed before sample collection to the extent possible. After each sample is

collected, an entry will be made in the logbook describing the sample and its identifying number.

4.3.3 Storage and Shipment

Sample storage in the field will typically consist of placement of labeled filled sample containers into individual Ziploc bags and into insulated coolers with ice. The cooler will be kept closed except when opening the cooler to add additional samples. Styrofoam peanuts or bubble wrap will be placed around the sample containers within the cooler to ensure safe storage and container integrity during transport. When not under direct observation of the Field Technician, the cooler will be sealed with a custody seal (preprinted gel-type seals, designed to break into small pieces if the seals are disturbed). Seals will be signed and dated before use.

When a sample shipment is transported to the laboratory, a chain-of-custody form will be placed in the cooler (chain-of-custody forms are discussed in detail below). A temperature blank, consisting of a water-filled vial, will also be placed in the cooler. The cooler will be sealed with signed and dated custody seals in as many places as necessary to ensure security. Packaging, marking, labeling, and shipping of samples will comply with all regulations promulgated by the U.S. Department of Transportation (DOT) in the Code of Federal Regulations, 49 CFR 171-177, and International Air Transport Association (IATA) regulations. If sent by overnight carrier, a bill of lading will also be used. Freight bills and bills of lading will be retained as part of the permanent documentation.

4.3.4 Chain of Custody

Sample chain-of-custody refers to the process of tracking the possession of a sample from the time it is collected in the field through the laboratory analysis. A sample is considered to be under a person's custody if it is in a person's physical possession; in view of the person after possession has been taken; or secured by that person so no one can tamper with the sample, or secured by that person in an area restricted to authorized personnel.

A chain-of-custody form is used to record possession of a sample and to document analyses requested. Each time the sample bottles or samples are transferred between individuals, both the sender and receiver sign and date the chain-of-custody form. This record will document sample custody transfer. Specifically, the following information is recorded on a chain-of-custody form:

- Sample identification number
- Sample collector's signature
- Date and time of collection

- Description of sample
- Analyses requested
- Shipper's name and address
- Receiver's name and address
- Signatures of persons involved in chain of custody.

All original data are recorded on chain-of-custody forms using indelible ink. If an error is made, the individual making the entry will correct the document by crossing a line through the error, entering the correct information, and initialing and dating the correction. Any subsequent errors discovered on a document will be corrected, initialed, and dated by the person who made the entry.

When transporting samples to the laboratory, the original chain-of-custody form will be placed in a sealed plastic bag in the sample cooler (each cooler will have a separate chain-of-custody form). A copy of the form will be retained in the project files. The cooler will be sealed with signed and dated custody seals in as many places as necessary to ensure security. Upon receipt at the laboratory, the custodian will check that seals on the cooler are intact, will open the cooler, and check that all samples are present. The laboratory will then assume sample custody by signing the chain-of-custody form and retain the samples in a secure area until such time as the samples are ordered destroyed.

4.4 Quality Control Samples

QC checks for sample collection will be accomplished by a combination of chain-of-custody protocols, laboratory quality assurance as prescribed by the analytical methods, and collection of field QC samples. QC samples are discussed below.

4.4.1 Field Duplicates

The field duplicate is two representative aliquots of the same sample that is prepared and analyzed identically. Collection of duplicate samples provides for the evaluation of precision both in the field and at the laboratory by comparing the analytical results of two samples taken from the same location (i.e., the primary and duplicate samples). Obtaining duplicate samples from a solid matrix requires homogenization (except of volatile compounds) of the sample aliquot prior to filling sample containers, in order to best achieve representative samples. Every effort will be made to obtain replicate samples; however, due to interference, lack of homogeneity, and the nature of the solid samples, the analytical results are not always reproducible.

Field duplicates for this project will be collected at a frequency of 5 percent of the total of each sample matrix (with at least one sample obtained). Primary and duplicate samples will be analyzed for all analyses requested for each collected sample.

4.4.2 Rinsate Blanks

A rinsate blank is a sample of laboratory-demonstrated analyte-free water passed over decontaminated sampling equipment. A rinsate blank is used to indicate potential contamination from sample instruments used to collect and transfer samples. This water must originate from one common source within the laboratory and should be the same water used by the laboratory performing the analysis.

Decontaminated sampling spoons will be used for sediment sampling. As such, rinsate blanks will be collected to confirm that adequate decontamination has occurred. A rinsate blank will be collected during the collection of sediment samples. Each rinsate blank will be collected by pouring laboratory-supplied analyte-free water over a decontaminated sampling spoon and capturing the water in the sample container. The rinsate blanks will be analyzed for all analyses requested for sediment samples.

4.4.3 Field Blank

Field blanks are used to determine if any onsite atmospheric contaminants are present that may result in contamination of samples during collection. Field blanks are collected by pouring laboratory-supplied analyte-free water into a volatile organic analyte (VOA) vial.

4.4.4 Trip Blanks

Trip blanks are used to determine if any onsite atmospheric contaminants are seeping into the sample vials or if any cross-contamination of samples is occurring during shipment or storage of sample containers. They consist of a VOA vial filled with laboratory-demonstrated analyte-free water. The trip blanks accompany the empty sample bottles from the laboratory into the field and with the filled bottles back to the laboratory. The trip blanks are never opened in the field.

4.5 Equipment Maintenance

To ensure that field measurement is accomplished accurately, field equipment undergoes routine maintenance and calibration as described below.

4.5.1 Preventive Maintenance

Akana performs routine inspections and preventive maintenance (parts replacement and cleaning) for all pieces of field equipment in our supply and equipment room. Maintenance

activities are conducted by our field technicians, who are specifically trained in the use, operation, and maintenance of the equipment. All field equipment used during this project, including water level indicators, Portable XRF analyzer, photoionization detectors (PIDs), and water field parameter meters (e.g., pH), is cleaned and decontaminated prior to use. Each piece of equipment is inspected and tested to ensure proper working function and facilitate replacement or repair of broken or non-operational components. Extra batteries are included in the equipment cases or in field vehicles for replacing dead batteries during field work.

4.5.2 Calibration

All field equipment is calibrated according to the manufacturer's guidelines and recommendations. If a PID is used during this project, it will be calibrated on a daily basis according to the manufacturer's specifications. The PID preferred by Akana field personnel uses a 10.2 eV probe and is calibrated using a manufacturer-supplied standard gas [isobutylene, equivalent to 34 parts per million (ppm) benzene]. Similarly, water field parameter meters will be calibrated at the start of each sampling day with laboratory-prepared calibrant standards within the range of the anticipated measurement. An instrument will also be recalibrated at any time an anomalous reading suggests instrument imprecision or inaccuracy.

5 Analytical Requirements

5.1 Methods

Previous sample data were assessed to identify Constituents of Potential Concern (COPCs) in site media. An analytical testing program will be performed to verify cleanup levels have been attained and document the residual contaminant concentrations in sediment. Additionally, samples may be analyzed for waste designation and potential re-use purposes.

Field observations may require modification of the sample types and parameters. All samples will be submitted for offsite fixed laboratory analyses using essentially SW 846 analytical protocols (EPA website 2009). The laboratory used will have the appropriate accreditations to perform the requested analyses. Samples will be analyzed for:

- Semi-volatile organic compounds (SVOCs)
- Diesel-Range Total Petroleum Hydrocarbons (NWTPH-Dx)
- Priority Pollutant Metals (PPM-13) as Total Metals
- Polychlorinated Biphenyls (PCBs)
- Dioxan/Furans
- Perfluorinated Compounds (PFCs)

Table 2 *(refer to Removal Action Plan, Table 2)* lists the MRLs for the proposed analyses. Table 1 *(refer to Removal Action Plan, Table 1)* lists the specific container and storage requirements for the

proposed analytical methods. Sample analyses will be performed on a standard turnaround time (i.e., typically 10 business days). Hard copy and electronic results will be delivered to Akana upon completion of each sample delivery group (not to exceed 21 days from sample receipt).

5.2 Laboratory Operations

Quality assurance of laboratory operations is guided by the laboratory's Quality Assurance Manual and standard operating procedures (SOPs). To ensure that samples are accurately tracked and instrumentation produces valid results, the laboratory follows sample custody procedures and performs preventive maintenance, calibration, and corrective action on instrumentation. These laboratory operations are discussed below.

5.2.1 Laboratory Custody Procedures

A designated sample custodian at the laboratory will accept custody of the shipped samples from the carrier and enter preliminary information about the package into a package or sample receipt log, including the person delivering the package and the status of the custody seals on the coolers (i.e., broken versus unbroken). The custodian responsible for sample log-in will follow the laboratory's SOP for opening the package, checking the contents, and verifying that the information on the chain-of-custody form agrees with samples received. The laboratory will also check the temperature blank inside the cooler and document it in the sample log-in form. Each sample in the cooler will be assigned a unique laboratory identification number used by the laboratory for analysis assignment, sample tracking, and data reporting.

5.2.2 Preventive Maintenance

Laboratories perform routine testing, inspection, and preventive maintenance (parts replacement and cleaning) of all instruments and equipment, and provide a clean, climate-controlled environment for instrument/equipment operation. Major instruments such as gas chromatographs (GC), atomic absorption spectrophotometers, analytical balances, and GC/mass spectrometer systems are maintained under commercial services contracts or by qualified in-house service technicians. All instrument maintenance is recorded in the associated instrument logbook for future reference and validation of scheduled maintenance. Logbook entries include the date, analyst's name, detailed description of the problem, detailed explanation of the solution, and a verification that the instrument is functioning properly.

5.2.3 Calibration

Calibration of analytical instrumentation is required to verify that the analytical system is operating properly and at the sensitivity necessary to meet established quantitation limits. Each instrument will be operated, calibrated, and maintained according to the manufacturer's guidelines and recommendations, as well as criteria set forth in the applicable analytical

methodology references. Once the operating parameters for an instrument have been established according to the analytical method, the analyst prepares standard solutions containing all of the analytes of interest, any internal standards, and any surrogate standards appropriate to the method. To establish the calibration curve for the particular analyte, these standard solutions are prepared at graduated dilution. One of the concentrations must be above the detection limit while the others are used to define the working range of the instrument.

5.2.4 Corrective Action

The laboratory Quality Assurance Manual also contains the systems established to assure that conditions adverse to quality are promptly identified and corrected. This corrective action system functions at both the bench level, through recognition and response to isolated events, and at the management level, through trend analysis. Recalibrations are performed when fundamental changes to the instrument characteristics occur (i.e., change of analytical column, etc.) or when results of QC check standards or samples indicate an out-of-control condition.

5.3 Quality Control Samples

The laboratory conducts internal QC checks by analyzing QC samples to determine if analytical operations are in control, as well as determining the effect that the sample matrix may have on data being generated. The type and frequency of specific QC samples analyzed will conform to the specified analytical method and project-specific requirements. QC results that vary from acceptable ranges shall result in the implementation of appropriate corrective measures, potential application of qualifiers, and/or an assessment of the impact these corrective measures have on the established data quality objectives. Quality control samples that will be analyzed are discussed below.

5.3.1 Method Blanks

Method blanks, consisting of aliquots of water or purified solid, are carried through the analytical scheme and serve to measure potential contamination associated with laboratory storage, preparation, or instrumentation (i.e., the level of laboratory background contamination). For most analyses, method blanks are analyzed on a daily basis and at a frequency of 1 per 20 samples if more than 20 samples are analyzed in a given batch.

5.3.2 Laboratory Control Samples

Laboratory control samples (LCSs) are aliquots of spiked water or purified solid to which known amounts of an analyte have been added. They are subjected to the sample preparation or extraction procedure and are analyzed as samples. Stock solutions used for LCSs are purchased or prepared independently of the calibration standards. The LCS analysis evaluates the functioning analytical method process and equipment function. Results of the LCS analysis

are expressed as percent recovery. LCSs are prepared and analyzed on at least a daily basis, with a greater frequency if a greater number of samples are analyzed on a given day.

5.3.3 Calibration Blanks

Calibration blanks are prepared with standards to create an instrument calibration curve. They differ from other standards only by the absence of an analyte and provide the zero-point for the curve.

5.3.4 Surrogates

Surrogates are measured amounts of certain compounds added before sample preparation or extraction. Analysts measure the surrogate recovery to determine systematic extraction problems and to assess the accuracy of a chemical measurement by comparing the measured value to the actual spiked value. Surrogates are added to all samples analyzed for organics. Surrogate recoveries are expressed as percent recovery.

5.3.5 Matrix Spikes

Matrix spike (MS) analyses are performed on samples submitted to the laboratory that are of the same matrix as the actual sample. The MS sample is spiked with known levels of the constituents of interest using a stock solution purchased or prepared independently of calibration standards. The MS sample is then subjected to the entire analytical procedure as the actual sample. MS analyses are used to assess the potential for matrix interference with recovery or detection of the constituents of interest and the accuracy of the determination. The MS results are compared to the expected result (i.e., sample concentration plus spike amount) and are reported as percent recovery. Spikes are prepared and analyzed on a daily basis and at a frequency of at least 1 per 20 samples or one per batch, whichever is more frequent.

5.3.6 Matrix Spike Duplicates

A second matrix spike sample (a.k.a., the matrix spike duplicate [MSD]) is prepared as above and analyzed. This is compared to the initial matrix spike to assess the precision of the analytical method by calculating the RPD. For this method, both a percent recovery and an RPD are reported. As such, both accuracy and precision for the matrix are measured. The samples are used to assess matrix interference effects on the method, as well as to evaluate instrument performance. MSDs are prepared and analyzed on a daily basis.

5.3.7 Laboratory Duplicates

A duplicate is a second laboratory sample taken from a submitted sample. The duplicate is then prepared along with the original. It is analyzed and compared to the original sample to assess

the precision of the analytical method and the potential variability of the sample matrix. This comparison is reported as the RPD.

5.3.8 Laboratory Control Sample Duplicates

In cases where the analyte concentration is consistently below the method detection limit, LCS duplicates are substituted for laboratory duplicate samples. An LCS duplicate is a second analysis of an LCS. The duplicate is prepared along with the original sample. It is analyzed and compared to the original sample to assess the precision of the analytical method and the potential variability of the sample matrix. For this method, both a percent recovery and an RPD are reported. As such, both accuracy and precision for the matrix are measured. LCS duplicates are prepared as needed.

5.4 Documentation

Laboratory data report packages will be provided in both hard copy and electronic formats. These packages will be kept in both the project file and the electronic database system, respectively, in Akana's office. Laboratory data reports will include all internal laboratory quality control checks and sample results. At a minimum, laboratory reporting shall include the following.

- Both field and laboratory sample identification number
- The sample date, the date it was received at the laboratory, and the date that it was extracted and/or analyzed
- The quantified concentration
- The method reporting limit
- Units for reporting
- Laboratory QC sample results (including date and time of analysis, method, and acceptability criteria)
- Data qualifiers assigned by the laboratory, with definitions presented in each report.

Upon receipt of laboratory data, the Akana Project Manager will review the data for completeness and format. If any error is noted in the laboratory report, the laboratory will be informed and appropriate corrective action will be performed, including review of raw data, assigning a data qualifier to the sample result, and/or re-analysis of the sample. For minor corrections (such as misspelled sample names), the individual making the correction shall cross a line through the error, enter the correct information, and initial and date the correction. Data validation and reporting are discussed in Section 7.0.

6 Assessment and Oversight

6.1 Response Actions

Assessments used during implementation of the project will include daily communication and updates during field work and data quality review by the Akana Project and Task Managers. Response actions to identified issues will be coordinated between these managers, the Field Technician, DEQ, NW Metals, as appropriate.

Although not planned, the DEQ Project Manager or designee may conduct an audit of the field activities for this project. The auditor will have the authority to stop work upon finding a significant condition that would adversely affect the quality and usability of the data. The Akana Project Manager will then have the responsibility for initiating and implementing response actions to address these deficiencies identified by the site audit. Once the response action(s) have been implemented, the DEQ Project Manager or designee may perform a follow-up audit.

6.2 Corrective Actions

If a QA/QC audit detects unacceptable conditions or data, the Akana Project Manager will be responsible for developing and initiating corrective action. The DEQ Project Manager will be notified if the nonconformance is significant or requires special expertise. Corrective action may include the following:

- Reanalyzing the samples, if holding times can be met
- Resampling and analyzing
- Evaluating and amending sampling and analytical procedures
- Accepting data and acknowledging the level of uncertainty or inaccuracy by flagging the data.

All corrective actions will be documented in writing and will be signed by the Project Manager and implementing Manager.

6.3 Reporting

During removal action activities, the Akana Project Manager will prepare monthly progress reports that consist of a summary of remediation activities completed during the month, and problems encountered and recommended solutions (including any related to QA). The progress reports will be transmitted electronically to NW Metals and DEQ representatives.

After the conclusion of field activities and upon receipt of analytical results and all supporting documentation, Akana will prepare the final removal report for submission to DEQ. This report will summarize activities performed during the project and the resulting data (along with any statements about data quality, as specified in Section 7.3).

7 Data Validation and Usability

Data generated during this project will be validated to ensure that DQOs have been met and the data are suitable for their intended use. The data validation review will include an evaluation of: the information provided on the analytical data sheets and required supporting documentation for all sample analyses; the sample collection documentation, including field notes, chain-of-custody forms, and field instrument calibration; and adherence to the procedures described in the SAP and the requested analytical methods.

7.1 Data Reduction and Review

Data reduction includes all processes that change the numerical value of the raw data. Laboratory analytical data are first generated in raw form at the instrument. These data may be in either graphic form or printed in tabular form. Specific data reduction, generation procedures, and calculations are found in each of the methods, as well as within the laboratory's QAPP. Analytical results must be reported consistently. Sediment data will be reported in concentrations of milligrams per kilogram (mg/kg) or micrograms per kilogram (µg/kg). Data for water samples will be reported in milligrams per liter (mg/L) or micrograms per liter (µg/L). Data reduction will be performed by the laboratory technician/analyst experienced with the particular analysis and knowledgeable of the method's QC requirements.

The technician/analyst who generates the analytical data is responsible for the correctness and completeness of those data. This review process involves evaluation of both the results of the QC data and the professional judgment of the person(s) conducting the review. This application of technical knowledge and experience to the evaluation of data is essential in ensuring that high-quality data are generated. The laboratory has documented procedures, which are to be followed and must be accessible to all laboratory personnel. The data review is generally conducted in a three-step process at the laboratory level prior to release of the final data package.

- *Level 1 Technical Data Review.* The analysts review the quality of their work based on an established set of guidelines. The review will ensure at a minimum that appropriate preparation, analysis, and SOPs have been followed; analytical results are correct and complete; QC samples are within established control limits; and that documentation is complete (e.g., any anomalies have been documented).

- *Level 2 Technical Review.* This level of review will be performed by a supervisor, data review specialist, or QA/QC officer whose function is to provide an independent review

of the data package. This review shall also be conducted according to an established set of guidelines (i.e., method requirements and laboratory SOPs). The Level 2 review includes a review of qualitative and quantitative data and review of documented anomalies.

- *Level 3 Administrative Data Review.* The final review of the data, prior to final report release, is performed by the project manager at the laboratory. This level of review provides a total overview of the data package to ensure its consistency and compliance with project requirements.

7.2 Data Validation

Data validation is a systematic procedure of reviewing a body of data against a set of established criteria to provide a specified level of assurance of validity prior to its intended use. The Akana Project Manager will assure validation of the analytical data by reviewing the field sampling procedures used and the laboratory analyses performed.

7.2.1 Sampling Procedure Review

Documentation from the field sampling activities will be reviewed to ensure that the samples were collected consistent with the procedures specified in the SAP, that they are representative of the conditions being measured (e.g., residual concentrations in sediment), and that they fulfill their intended purpose (e.g., confirmation, waste designation). Field notes will be checked to verify samples have supporting information to verify when, how, and where sampling occurred; who performed the sampling; and that appropriate sample identifiers were used. Field instrument calibration logs will be reviewed if relied upon for selection of samples for analysis or if they are critical for interpretation of analytical results. Chain-of-custody and sample receipt documentation will be reviewed to ensure that chain of custody was unbroken and samples arrived in good condition.

7.2.2 Analytical Data Validation

The analytical data will be evaluated in accordance with the QA/QC requirements specified in this QAPP and the technical specifications of the analytical methods in the EPA's National Functional Guidelines (EPA 2004, 2008). The laboratory generating analytical data for this project will be required to submit results that are supported by sufficient backup and QA/QC data to enable the reviewer to determine the quality of the data. The data evaluation process will include reviewing:

- The overall deliverable package for completeness
- Holding times

- That all samples were analyzed using the specified analytical methods
- Laboratory QC results (e.g., blanks, surrogates, spikes, duplicates) to assess if the data are within the method required limits and specifications
- Field quality QC results (e.g., field duplicates, blanks)
- Laboratory qualifiers.

A review of raw data will not be performed. When possible, discrepancies will be resolved through direct correspondence with the laboratory project manager. If the data review reveals significant deviations and problems with the analytical data, Akana may recommend corrective action (Section 6.2) or a complete validation of the data, including raw data.

7.3 Quality Assurance Reporting

After the conclusion of field activities and upon receipt of analytical results, Akana will prepare a Removal Action Report. The results of the data validation will be included in a Data Usability Summary Report (DUSR) as an appendix to the Removal Action Report. The DUSR will describe the samples and the analytical parameters performed, data deficiencies, analytical protocol deviations, and QC problems. All data qualifiers will be discussed. The DUSR will also render an opinion as to the validity and usability of the data and whether DQOs have been achieved. In addition, the removal action report and/or DUSR will address the following:

- Any adverse conditions or deviations from the SAP
- Significant QA problems and recommended solutions
- Corrective actions taken for any problems previously identified.

8 Audits

Audits are systematic examinations to determine whether activities comply with planned arrangements, whether the arrangements are implemented effectively, and whether the results are suitable to achieve project objectives. No field or laboratory audits are anticipated for this project. Laboratories routinely undergo performance evaluation audits by various federal and state agencies to ensure that they meet accreditation or certification requirements. Additionally, laboratories regularly perform internal QA analyses for the applicable analytical methods to be used for a project.

References

DEQ. 2001. *Guidance for Ecological Risk Assessment*. Oregon Department of Environmental Quality. April 1998. SLVs updated December 2001.

DEQ. 2003. *Risk-Based Decision Making for the Remediation of Petroleum-Contaminated Sites*. Oregon Department of Environmental Quality. September 22.

DEQ. 2007. Guidance for Assessing Bioaccumulative Chemicals of Concern in Sediment. Oregon Department of Environmental Quality. Updated April 2007.

DEQ. 2009. Risk-Based Concentrations for Individual Chemicals. Oregon Department of Environmental Quality. Environmental Cleanup and Tanks Program. Accessed at Internet site: http://www.deq.state.or.us/lq/pubs/docs/RBDM09a.xls. Last updated 15 September 2009.

EPA. 1998. *Quality Assurance Guidance for Conducting Brownfields Site Assessments*. EPA 540-R-98-038. U.S. Environmental Protection Agency. September.

EPA. 2004. *U.S. EPA Contract Laboratory Program National Functional Guidelines for Inorganics Data Review*. EPA 540-R-04-004. U.S. Environmental Protection Agency. October

EPA. 2006. *Guidance on Systematic Planning Using the Data Quality Objectives Process.* EPA/240/B-06/001. U.S. Environmental Protection Agency. February.

EPA. 2008. *U.S. EPA Contract Laboratory Program National Functional Guidelines for Superfund Organics Data Review*. EPA/540/R-08/01. U.S. Environmental Protection Agency. June.

EPA. 2008. *U.S. EPA Contract Laboratory Program National Functional Guidelines for Superfunds Organics Data Review*. EPA-540-R-08-01. U.S. Environmental Protection Agency. June.

EPA. 2009. *Regional Screening Levels for Chemical Contaminants at Superfund Sites.*. U.S. Environmental Protection Agency. December 2009

EPA website. 2009. *SW-846 On-Line Test Methods*. http://www.epa.gov/epaoswer/hazwaste/test/ main.htm.