AdvanTex® AX20N Mode 3B w/Fiberglass Tank w/Saddle

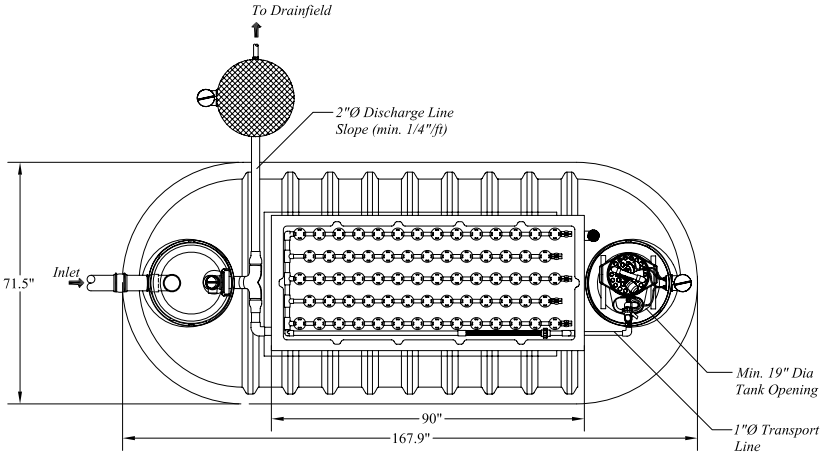

Top View
Scale: 1" = 3'-0"

Approved by DEQ
9/14/2007

Design Notes

Expected Flows
- Q_{Peak} = 500 gpd
  Up To 4 Bedrooms

Expected Influent Quality
Grease & Oil: 20 mg/L
BOD: 150 mg/L
TSS: 40 mg/L
TKN: 65 mg/L

Typical Effluent Quality
BOD: < 10 mg/L
TSS: < 10 mg/L
TN: < 25 mg/L

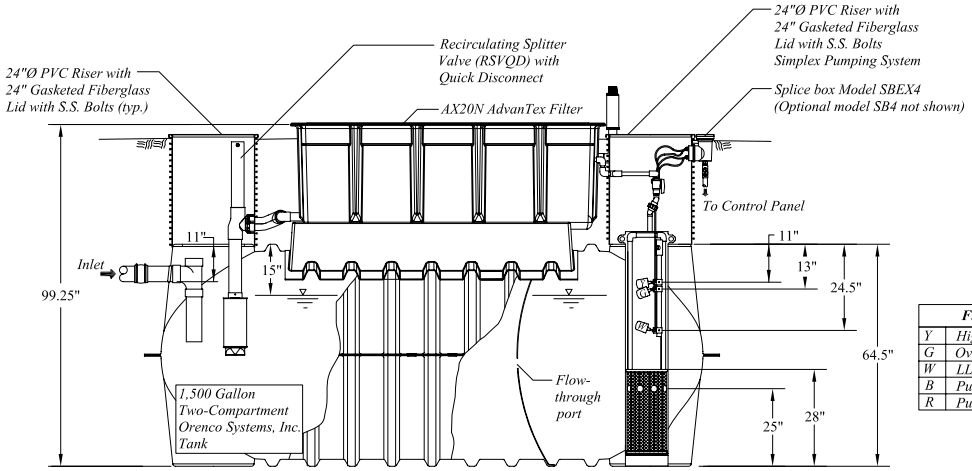

Float Functions	
Y	High Level Alarm
G	Override Timer ON/OFF
W	LLA/RO
B	Pump On
R	Pump Off

Side View
Scale: 1" = 3'-0"

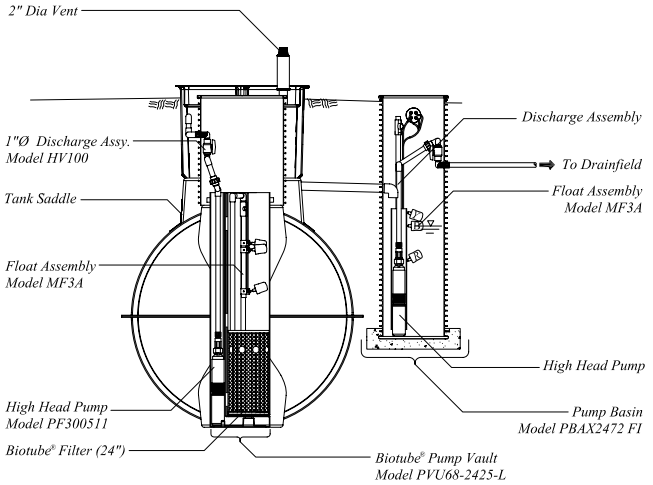

End View
Scale: 1" = 3'-0"

Orenco Systems® Incorporated

Title: AdvanTex® AX20N Mode 3B

Drawing No. NDW-ATX-OR-5

Scale: 1" = 3'-0"

Date: 8/21/07

Drawn By: CHRIS JORDAN

Drawing: 1 OF 1

Revision: A-04

Designed By: ENGINEERING

Approved By: DARREN SIMMIE

Date Approved: 8/22/07

U.S. Patents-4,439,323
5,492,635; 6,372,137; 5,360,556
5,980,746; 5,531,894; 5,480,561
D461,870; D445,476
Other Patents Pending

© 2005 Orenco Systems ®, Inc

AdvanTex® AX20N Mode 3A w/Fiberglass Tank w/Saddle

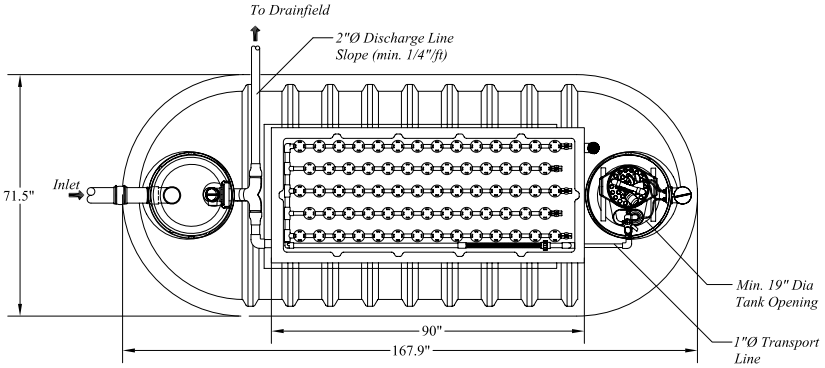

Top View
Scale: 1" = 3'-0"

Approved by DEQ
9/14/2007

Design Notes

Expected Flows
- Q_{Peak} = 500 gpd
  Up To 4 Bedrooms

Expected Influent Quality
Grease & Oil: 20 mg/L
BOD: 150 mg/L
TSS: 40 mg/L
TKN: 65 mg/L

Typical Effluent Quality
BOD: < 10 mg/L
TSS: < 10 mg/L
TN: < 25 mg/L

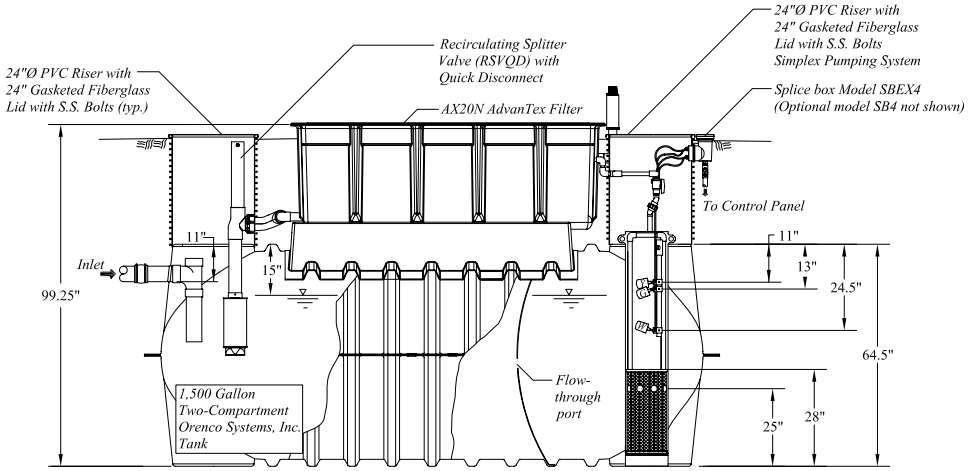

Side View
Scale: 1" = 3'-0"

Float Functions	
Y	High Level Alarm
G	Override Timer ON/OFF
W	LLA/RO

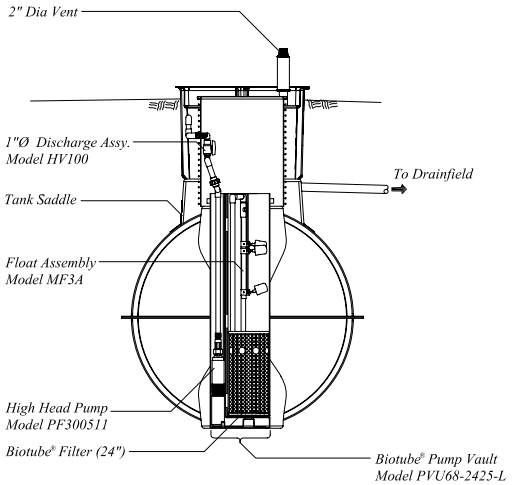

End View
Scale: 1" = 3'-0"

Orenco Systems® Incorporated

Title: AdvanTex® AX20N Mode 3A

Drawing No. NDW-ATX-OR-6

Scale: 1" = 3'-0"

Drawn By: CHRIS JORDAN

Drawing: 1 OF 1

Date: 8/21/07

Designed By: ENGINEERING

Revision: A-04

Approved By: DARREN SIMMIE

Date Approved: 8/22/07

U.S. Patents-4,439,323
5,492,635; 6,372,137; 5,360,556
5,980,746; 5,531,894; 5,480,561
D461,870; D445,476
Other Patents Pending

© 2005 Orenco Systems ®, Inc

AdvanTex® AX20N Mode 3A w/Concrete Tank

Approved by DEQ
9/14/2007

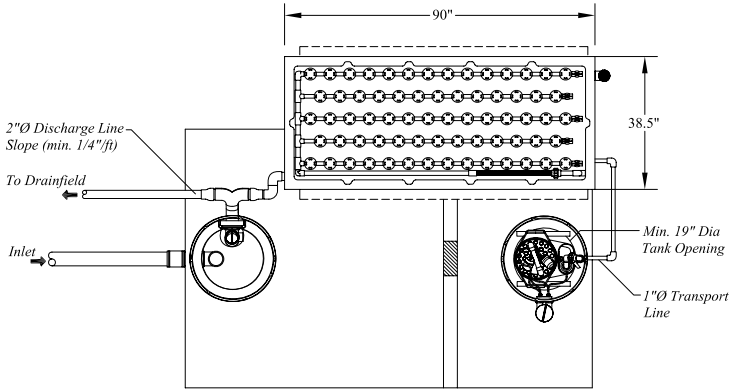

Top View
Scale: 1" = 3'-0"

Tank Manufacturer	Tank Size	I	D	Y (High Level)	G (Timer Override On/Off)	W (Low Level)	RSV
Orenco FRP	1500 Gal.	11"	64.5"	11"	13"	25"	15"
Willamette Graystone	1500 Gal.	11"	64.5"	11"	13"	25"	15"
Riverside Ready Mix	1500 Gal.	11"	60.5"	11"	13"	25"	15"
Waite Concrete Prod.	1500 Gal.	10"	64"	10"	12"	24"	14"
Advanced PreCast	1500 Gal.	10"	68"	10"	12"	24"	14"
Hank's Concrete Prod.	1500 Gal.	10"	58"	10"	12"	24"	14"

Design Notes

Expected Flows
- Q_{Peak} = 500 gpd
  Up To 4 Bedrooms

Expected Influent Quality
Grease & Oil: 20 mg/L
BOD: 150 mg/L
TSS: 40 mg/L
TKN: 65 mg/L

Typical Effluent Quality
BOD: < 10 mg/L
TSS: < 10 mg/L
TN: < 25 mg/L

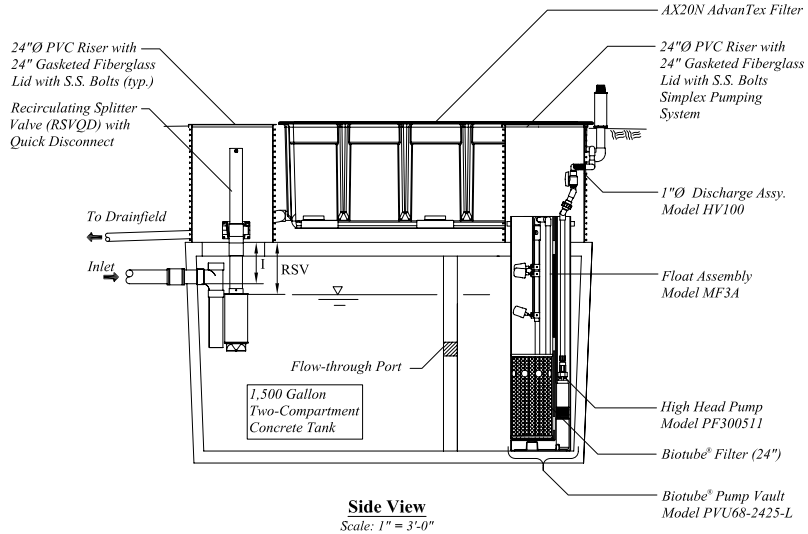

Side View
Scale: 1" = 3'-0"

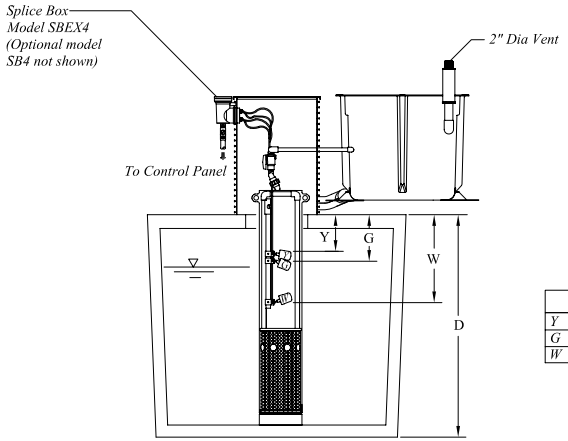

End View
Scale: 1" = 3'-0"

Float Functions	
Y	High Level Alarm
G	Override Timer ON/OFF
W	LLA/RO

Orenco Systems® Incorporated

Title: AdvanTex® - AX20N Mode 3A
Drawing No. NDW-ATX-OR-7
Scale: 1" = 3'-0"
Date: 8/21/07
Drawn By: CHRIS JORDAN
Drawing: 1 OF 1
Revision: A-04
Designed By: ENGINEERING
Approved By: DARREN SIMMIE
Date Approved: 8/22/07

U.S. Patents-4,439,323
5,492,635-6,372,137-5,360,556
5,980,748-5,531,894- 5,480,561
Other Patents Pending

© 2005 Orenco Systems ®, Inc

AdvanTex® AX20N Mode 3B w/Concrete Tank

Approved by DEQ
9/14/2007

Design Notes

Expected Flows
- Q_{Peak} = 500 gpd
  Up To 4 Bedrooms

Expected Influent Quality
Grease & Oil: 20 mg/L
BOD: 150 mg/L
TSS: 40 mg/L
TKN: 65 mg/L

Typical Effluent Quality
BOD: < 10 mg/L
TSS: < 10 mg/L
TN: < 25 mg/L

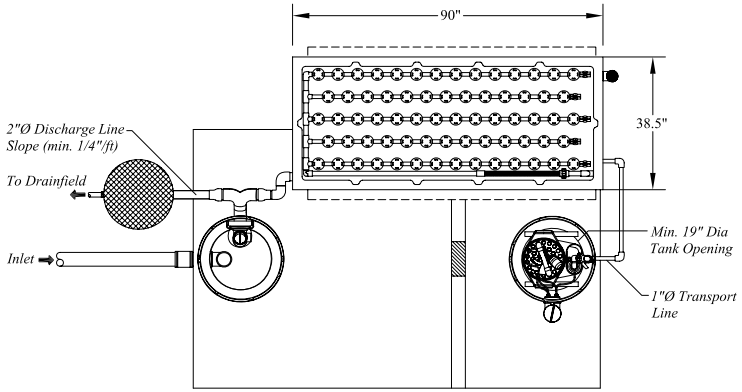

Top View
Scale: 1" = 3'-0"

Tank Manufacturer	Tank Size	I	D	Y (High Level)	G (Timer Override On/Off)	W (Low Level)	RSV
Orenco FRP	1500 Gal.	11"	64.5"	11"	13"	25"	15"
Willamette Graystone	1500 Gal.	11"	64.5"	11"	13"	25"	15"
Riverside Ready Mix	1500 Gal.	11"	60.5"	11"	13"	25"	15"
Waite Concrete Prod.	1500 Gal.	10"	64"	10"	12"	24"	14"
Advanced PreCast	1500 Gal.	10"	68"	10"	12"	24"	14"
Hank's Concrete Prod.	1500 Gal.	10"	58"	10"	12"	24"	14"

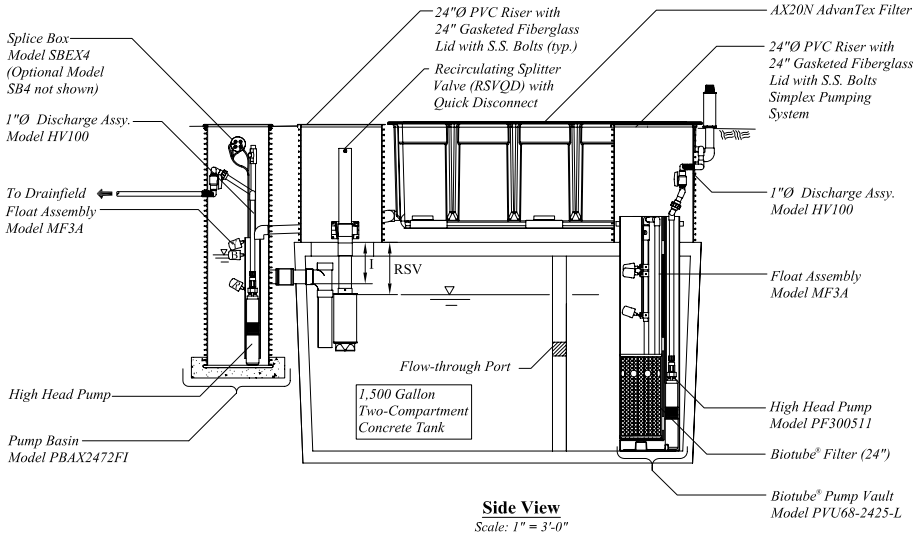

Side View
Scale: 1" = 3'-0"

Float Functions	
Y	*High Level Alarm*
G	*Override Timer ON/OFF*
W	*LLA/RO*
B	*Pump On*
R	*Pump Off*

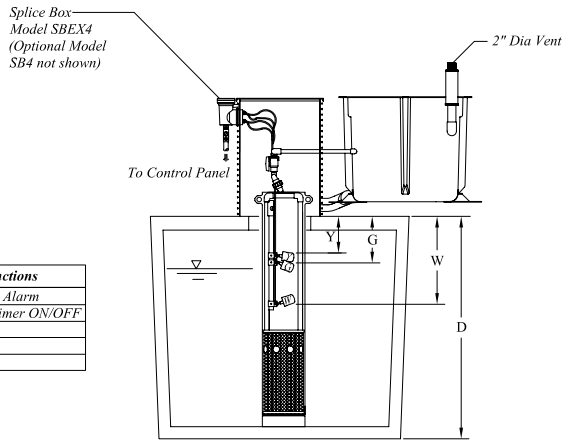

End View
Scale: 1" = 3'-0"

Orenco Systems® Incorporated

Title: AdvanTex® - AX20N Mode 3B
Drawing No. NDW-ATX-OR-8
Scale: 1" = 3'-0"
Date: 8/21/07
Drawn By: CHRIS JORDAN
Drawing: 1 OF 1
Revision: A-04
Designed By: ENGINEERING
Approved By: DARREN SIMMIE
Date Approved: 8/22/07

U.S. Patents-4,439,323
5,492,635-6,372,137-5,360,556
5,980,748-5,531,894- 5,480,561
Other Patents Pending

© 2005 Orenco Systems ®, Inc

AdvanTex® AX20N 2 Pod Mode 3A w/Concrete Tank

Design Notes

Expected Flows
- Q_{Peak} = 1000 gpd

Up To 6 Bedrooms

Expected Influent Quality
Grease & Oil: 20 mg/L
BOD: 150 mg/L
TSS: 40 mg/L
TKN: 65 mg/L

Typical Effluent Quality
BOD: < 10 mg/L
TSS: < 10 mg/L
TN: < 25 mg/L

Approved by DEQ
9/14/2007

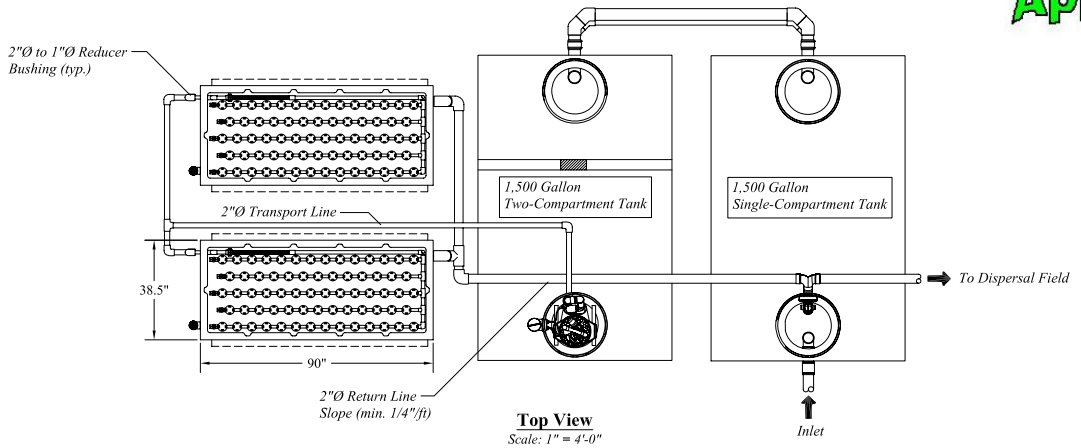

Top View
Scale: 1" = 4'-0"

Tank Manufacturer	Tank Size	I	D	Y (High Level)	G (Timer Override On/Off)	W (Low Level)	RSV
Orenco FRP	1500 Gal.	11"	64.5"	11"	13"	25"	15"
Willamette Graystone	1500 Gal.	11"	64.5"	11"	13"	25"	15"
Riverside Ready Mix	1500 Gal.	11"	60.5"	11"	13"	25"	15"
Waite Concrete Prod.	1500 Gal.	10"	64"	10"	12"	24"	14"
Advanced PreCast	1500 Gal.	10"	68"	10"	12"	24"	14"
Hank's Concrete Prod.	1500 Gal.	10"	58"	10"	12"	24"	14"

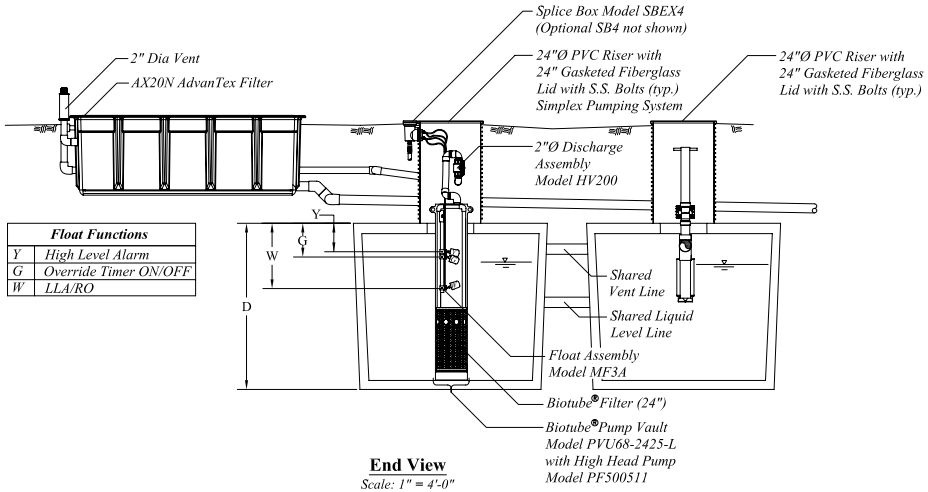

Float Functions	
Y	High Level Alarm
G	Override Timer ON/OFF
W	LLA/RO

End View
Scale: 1" = 4'-0"

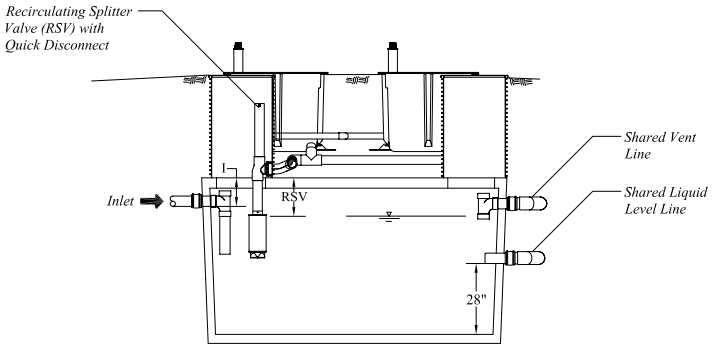

Side View
Scale: 1" = 4'-0"

Orenco Systems® Incorporated

Title: AdvanTex® AX20N 2 Pod Mode 3A
Drawing No. NDW-ATX-OR-18
Scale: 1" = 4'-0"
Date: 8/21/07
Drawn By: CHRIS JORDAN
Drawing: 1 OF 1
Revision: A-04
Designed By: ENGINEERING
Approved By: DARREN SIMMIE
Date Approved: 8/22/07

U.S. Patents-4,439,323
5,492,635-6,372,137-5,360,556
5,980,748-5,531,894- 5,480,561
Other Patents Pending

© 2005 Orenco Systems ®, Inc

AdvanTex® AX20N 2 Pod Mode 3B w/Concrete Tank

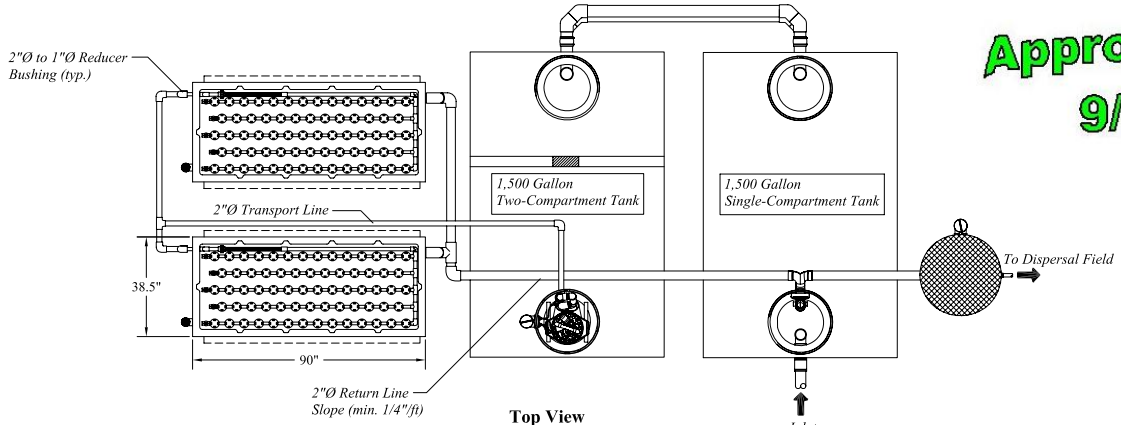

Top View
Scale: 1" = 4'-0"

Approved by DEQ 9/14/2007

Design Notes

Expected Flows
- Q_{Peak} = 1000 gpd
  Up To 6 Bedrooms

Expected Influent Quality
Grease & Oil: 20 mg/L
BOD: 150 mg/L
TSS: 40 mg/L
TKN: 65 mg/L

Typical Effluent Quality
BOD: < 10 mg/L
TSS: < 10 mg/L
TN: < 25 mg/L

Tank Manufacturer	Tank Size	I	D	Y (High Level)	G (Timer Override On/Off)	W (Low Level)	RSV
Orenco FRP	1500 Gal.	11"	64.5"	11"	13"	25"	15"
Willamette Graystone	1500 Gal.	11"	64.5"	11"	13"	25"	15"
Riverside Ready Mix	1500 Gal.	11"	60.5"	11"	13"	25"	15"
Waite Concrete Prod.	1500 Gal.	10"	64"	10"	12"	24"	14"
Advanced PreCast	1500 Gal.	10"	68"	10"	12"	24"	14"
Hank's Concrete Prod.	1500 Gal.	10"	58"	10"	12"	24"	14"

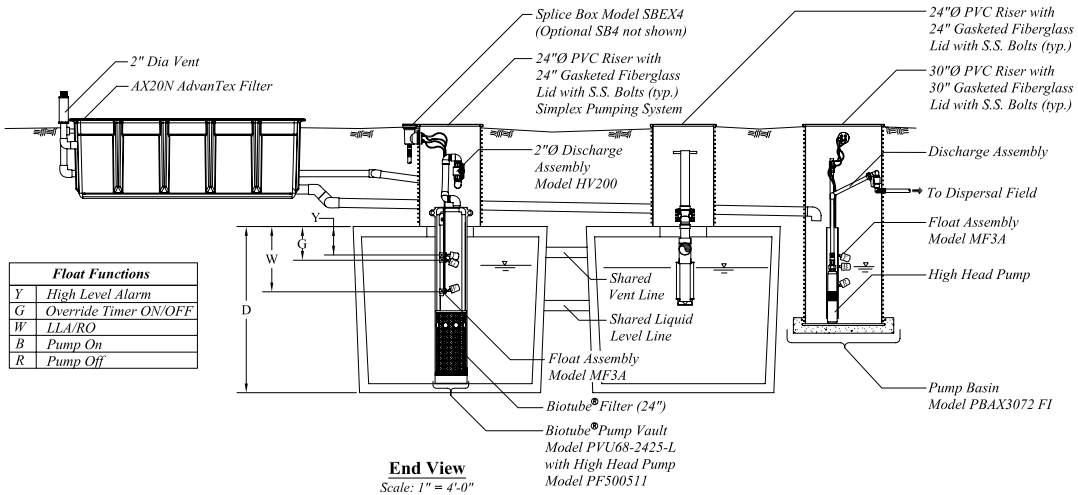

Float Functions	
Y	High Level Alarm
G	Override Timer ON/OFF
W	LLA/RO
B	Pump On
R	Pump Off

End View
Scale: 1" = 4'-0"

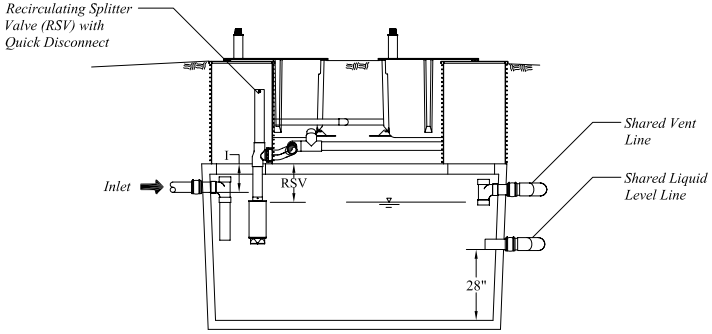

Side View
Scale: 1" = 4'-0"

Orenco Systems® Incorporated

Title: AdvanTex® AX20N 2 Pod Mode 3B

Drawing No. NDW-ATX-OR-19

Scale: 1" = 4'-0"

Date: 8/21/07

Drawn By: CHRIS JORDAN

Drawing: 1 OF 1

Revision: A-04

Designed By: ENGINEERING

Approved By: DARREN SIMMIE

Date Approved: 8/22/07

U.S. Patents-4,439,323
5,492,635-6,372,137-5,360,556
5,980,748-5,531,894- 5,480,561
Other Patents Pending

© 2005 Orenco Systems®, Inc

AdvanTex® AX20-3 Mode 3 - Treatment Standard 2

*Note:
For UV Disinfection discharge options, reference drawing NDW-ATX-OR-21

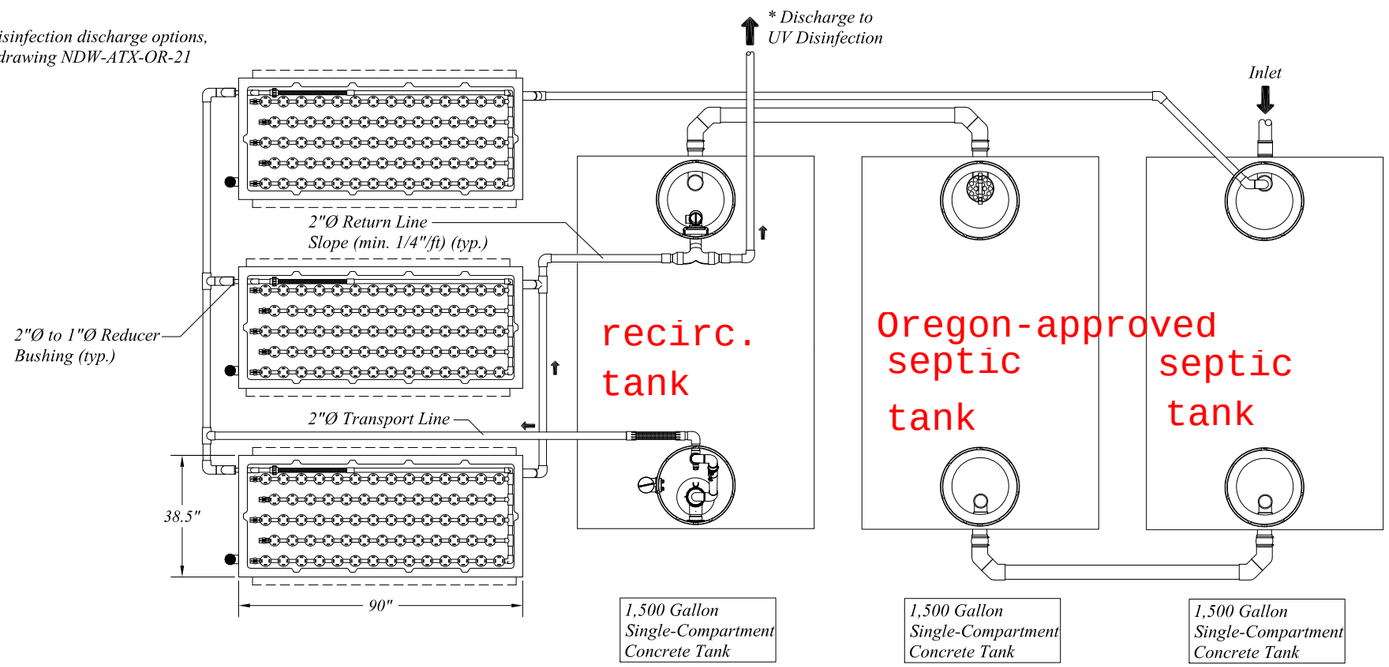

Top View
Scale: 1" = 4'-0"

Design and Installation Notes

- Q peak = 1,500 gpd
- Installation To Be Performed By An AdvanTex Trained Installer Only
- Start-up And Service To Be Performed By An AdvanTex Trained Service Provider

APPROVED
By Randy Trox at 7:55 am, Jun 17, 2016

1 of 2

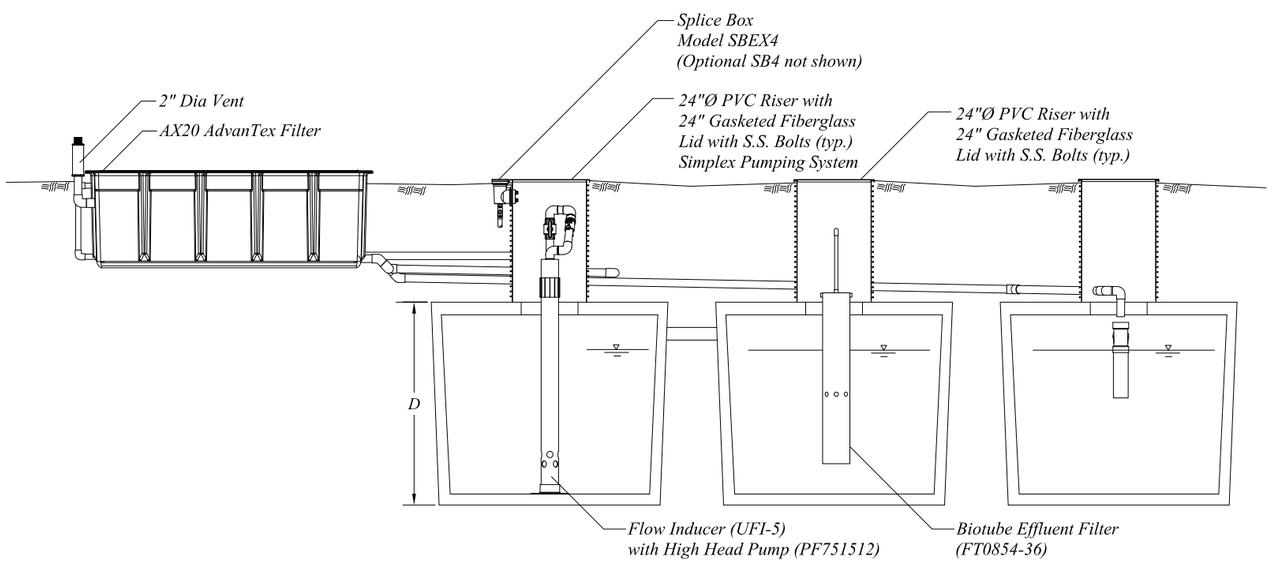

End View
Scale: 1" = 4'-0"

Float Functions	
Y	High Level Alarm
G	Override Timer ON/OFF
W	LLA/RO

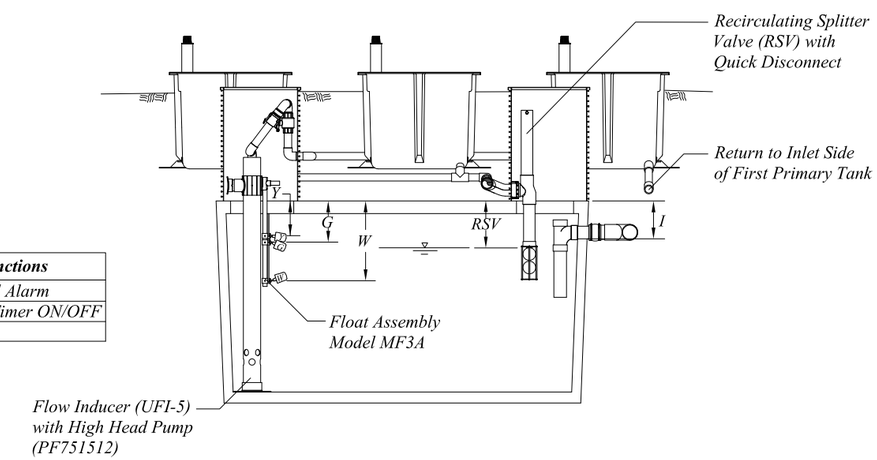

Side View
Scale: 1" = 4'-0"

Orenco®
Orenco Systems®, Incorporated

© Orenco Systems, Inc.
Portions or all of this Standard System Configuration Drawing, as appropriate, may be reproduced and integrated into the site-specific layout and configuration of a system by its designer.

Disclaimer: This Standard System Configuration Drawing is provided solely as a design aid, and in no event should it be used as a replacement for site-specific engineering and design of the layout and configuration of an actual system. Orenco neither represents nor warrants that the configuration illustrated herein will perform in compliance with the requirements for any particular site or application.

AdvanTex AX20-3 Mode 3	Drawn By: BEN SMITH	Scale: 1" = 4'-0"	
	Reviewed By: JS	Sheet: 1 OF 1	
Treatment Standard 2	File Name: NDW-ATX-OR-REG-10	Rev: 1.1	Date: 6/10/2016

AdvanTex® AX - UV Discharge Options (Example) for Model AXUV-125/31

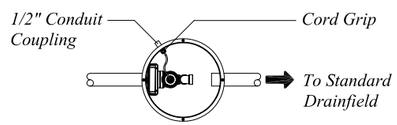

UV Basin: Gravity Discharge Option
Top View

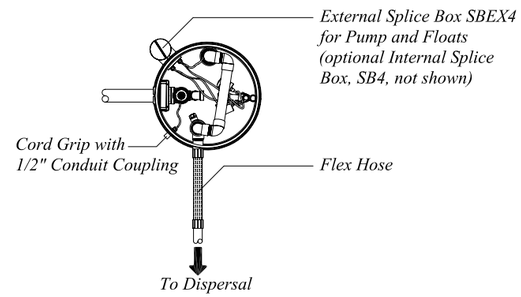

UV Basin: Pump Discharge Option
Top View

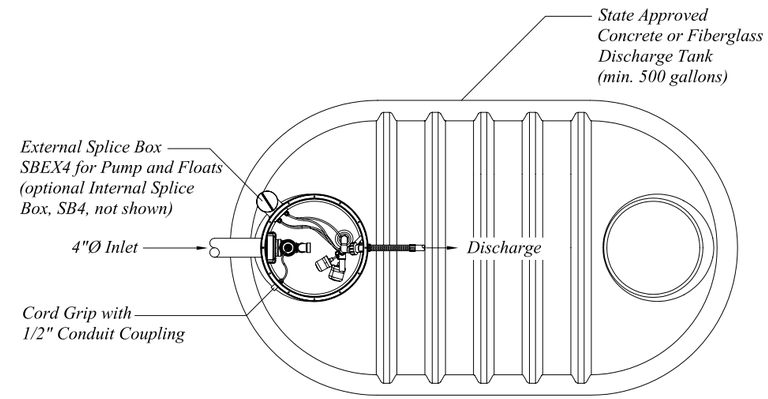

UV Discharge Tank Option
Top View

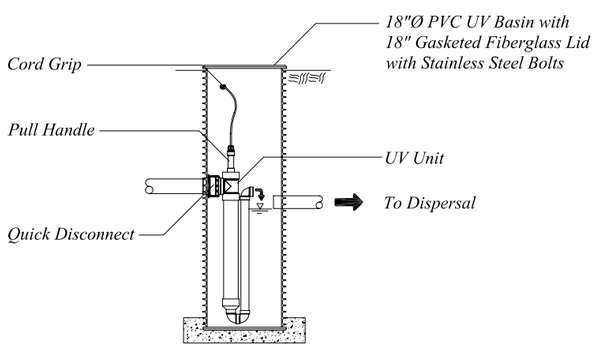

UV Basin: Gravity Discharge Option
Side View

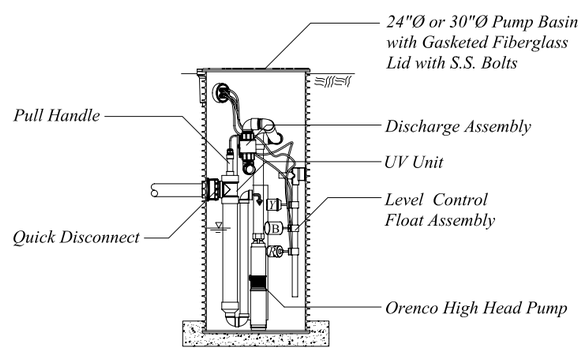

UV Basin: Pump Discharge Option
Side View

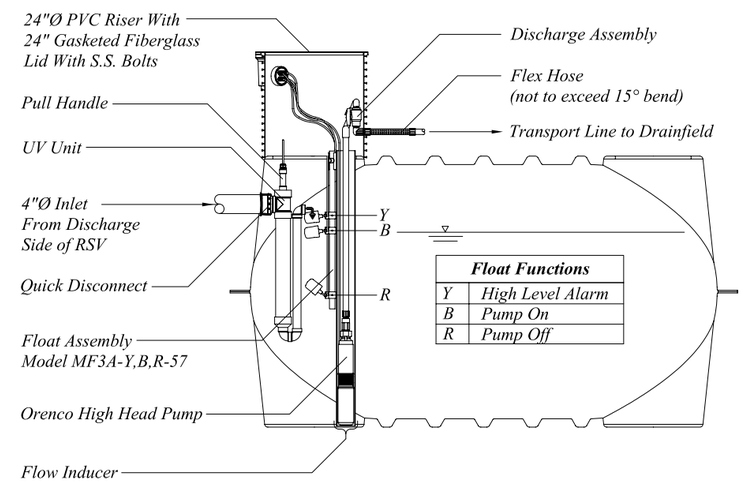

UV Discharge Tank Option
Side View

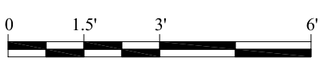

Graph Scale

Copyright © 2011
Orenco Systems®, Inc.

UNAUTHORIZED CHANGES & USES
Orenco has prepared these drawings for use by the design engineer. Orenco will not be responsible or liable for unauthorized changes to or uses of these drawings. All changes to these drawings must be made in writing and must be approved by the design engineer.

PRODUCT CONFIGURATION DRAWINGS

Orenco Systems® Incorporated
Changing the Way the World Does Wastewater®

Drawn By: BEN SMITH	Project: AdvanTex®- AX UV Discharge Options	Scale: 1" = 3'-0"	
Drawn For:		Sheet: 1 OF 1	
	Title: NDW-ATX-OR-21	Rev: A-05	Date: 8/02/2011