RIVERBEND LANDFILL COMPANY
13469 SW Highway 18
McMinnville, OR 97128
(503) 472-8788
(503) 434-9770 Fax

October 12, 2017

Mr. Bob Schwarz
Oregon Department of Environmental Quality
Eastern Region
400 E. Scenic Drive, Suite 307
The Dalles, Oregon 97058

SUBJECT: Submittal of Well MW-12A Groundwater Quality Informal Preliminary Assessment Interim Report
Riverbed Landfill Solid Waste Disposal Site Permit (SWDP) No. 345
Yamhill County, Oregon

Dear Mr. Schwarz:

Please find enclosed two copies of the well MW-12A groundwater quality informal preliminary assessment (IPA) interim report for the Riverbend Landfill (RL). The report was prepared by SCS Engineers (SCS) on behalf of the Riverbend Landfill Company (RLC).

This report presents the interim results of the IPA to further evaluate the source of changes in the inorganic chemistry of groundwater quality samples collected from well MW-12A. The IPA field and reporting activities were performed in accordance with a work plan that was approved by the Oregon Department of Environmental Quality (DEQ) on April 14, 2017.

Please contact me (602) 757-3352 if you have any questions related to the contents of the enclosed report.

Sincerely,

James L. Denson, Jr.
PNW/BC Environmental Protection Manager

Enclosure – MW-12A IPA Interim Report (hardcopy and electronic)

Cc (w/enclosure): Bill Mason, DEQ
Marc Stevens, DEQ
Mark Verwiel, WM
Morgan Ireland, WM
Greg Hemmen, WM
Nick Godfrey, RLC

Environmental Consultants
and Contractors

15940 SW 72nd Avenue
Portland, OR 97224

(503) 639-9201
FAX (503) 684-6948
www.scsengineers.com

SCS ENGINEERS

October 12, 2017
File No. 04216038.17

Mr. James L. Denson, Jr.
Riverbend Landfill Company
13469 SW Highway 18
McMinnville, OR 97128

Subject: Interim Report Presenting the Results of the Ongoing Informal Preliminary Assessment to Evaluate Monitoring Well MW-12A Groundwater Quality: Riverbend Landfill, McMinnville, Oregon

Dear Mr. Denson

This report presents the interim results of an Informal Preliminary Assessment (IPA) to further evaluate the source of changes in the inorganic chemistry of groundwater samples collected from monitoring well MW-12A at the Riverbend Landfill (RL) in McMinnville, Oregon. SCS Engineers (SCS) prepared this report at the request of Riverbend Landfill Company (RLC). The IPA field and reporting activities were performed per the requirements in Section 11.5.3 of RL's environmental monitoring plan (EMP; SCS, 2014), and in accordance with a work plan (SCS, 2017) that was approved by the Oregon Department of Environmental Quality (DEQ) on April 14, 2017 (DEQ, 2017).

Consistent with the MW-12A IPA work plan, this interim report presents and provides a preliminary evaluation of the (1) findings of the hydro-seeding investigation, (2) results of the first round of water quality sampling performed in April 2017, and (3) results of the MW-3A, MW-4A, and MW-6A integrity testing and follow-up groundwater quality monitoring[1]. This report also includes analytical results for additional groundwater samples collected from MW-12A in July and September 2017. In accordance with the approved IPA schedule, a final MW-12A IPA report will be submitted to the DEQ presenting and evaluating results of two additional water-quality monitoring events to be completed in conjunction with the fourth (Fall) quarter 2017 and first (Winter) quarter 2018 monitoring events.

BACKGROUND

The RL compliance monitoring well network, including well MW-12A, is located south of the landfill (see Figure 1).[2] Well MW-12A is screened in the shallow, silt-clay WBZ and is located hydraulically downgradient of landfill Modules 3 and 4 based on interpretative groundwater flow towards the south-southwest in the vicinity of well MW-12A (see Figures 2 and 3). The well construction information for MW-12A and other site wells and piezometers is summarized in

[1] Water-quality monitoring of wells MW-3A, MW-4A, and MW-6A was not part of the initial IPA scope but was incorporated into the IPA monitoring activities at the request of the DEQ.

[2] The site monitoring wells denoted with an "A" monitor the shallow, silt-clay water-bearing zone (WBZ) and monitoring wells denoted with a "B" monitor the deeper, sand-gravel WBZ.

Table 1. Routine groundwater samples for laboratory analysis are collected semiannually from MW-12A during the Spring and Fall, consistent with RL's EMP (SCS, 2014).

The MW-12A groundwater quality IPA was initiated in 2016 following the Spring (May) 2016 event when analytical results of MW-12A groundwater showed concentrations of four non-hazardous inorganic parameters (bicarbonate alkalinity [HCO_3], dissolved magnesium [Mg], dissolved sodium [Na], and total dissolved solids [TDS]) that were above their respective statistically-derived site-specific concentration limits (SSLs) (see Table 2). These results were confirmed in the June 2016 verification resampling event (see Table 2). WM notified the DEQ of the verification sample results and their intent to conduct an IPA for evaluating MW-12A groundwater quality (WM, 2016). Results of the initial phase of the MW-12A IPA performed in August 2016 indicated that the source of the change in the inorganic chemistry of MW-12A groundwater in May 2016 was likely not related to a release from the landfill because, in large part, the concentration of inorganic parameter that were elevated in the May and June 2016 MW-12A groundwater samples were trending downwards to background values at that time (SCS, 2016).

Following submittal of the initial IPA report, the analytical results of the routine Fall (November) 2016 monitoring showed a re-occurrence of a potential change in MW-12A groundwater quality. The November 2016 analytical results detected HCO_3, chloride (Cl), Mg, Na, TDS, and total organic carbon (TOC) concentrations above their SSLs in MW-12A groundwater (see Table 2). Groundwater elevations in MW-12A were also observed to increase pronouncedly during Fall 2016.

In December 2016, WM, SCS, and the DEQ met to discuss the results of the initial IPA and November 2016 routine event (as discussed above). As follow-up to the December 2016 meeting, resampling of MW-12A groundwater was performed on December 22, 2016 and these results verified the November 2016 concentrations (see Table 2). In addition to verification resampling of MW-12A performed on December 22, 2016, the following additional samples were collected and analyzed: (1) no purge and high purge (i.e., removal of 10 casing volumes) groundwater samples from MW-12A, (2) ponded surface water near MW-12A, and (3) a South Yamhill River sample collected near MW-12A. The additional monitoring activities were proposed to evaluate whether surface water, included ponded water that occurs seasonal in the low-lying area in the vicinity of MW-12A, was influencing MW-12A water quality.

WM notified the DEQ of the December 2016 verification resampling and additional monitoring results, and of its intention to continue the MW-12A IPA efforts in 2017 (WM, 2017). As such, a second work plan (SCS, 2017) was submitted to and subsequently approved by the DEQ presenting a scope of work to further evaluate the source of the changes in MW-12A groundwater quality, based in part of discussions WM had with the DEQ during the December 2016 meeting.

MW-12A IPA FIELD ACTIVITIES

The field activities summarized in this section were completed as part of the first phase of IPA monitoring activities, consistent with the approved IPA work plan.

The first IPA monitoring event (as defined in the work plan) was performed over a 3-month period (mid-April through mid-July 2017) given the multi-faceted nature of the scope of work that included assessing the integrity of wells MW-3A, MW-4A, and MW-6A using geophysical and video logging methods to determine their suitability for performing groundwater sampling and analyses. The schedule for completing this first phase of work was delayed primarily due to conflicts with scheduling the geophysical logging contractor to perform the well integrity testing of wells MW-3A, MW-4A, and MW-6A, which needed to be completed before the wells could be sampled.

Water Quality and Leachate Sampling and Analysis

Consistent with the IPA work plan, water-quality and leachate management system (LMS) samples were collected for laboratory analyses during the April 2017 and September 2017 sampling events (see Figure 1). Before the groundwater samples were collected from the monitoring locations listed below, groundwater elevations were measured in the following shallow WBZ wells: MW-3A, MW-4A, MW-5A, MW-6A, MW-12A, MW-14A, MW-15A, MW-21A, and MW-22A and piezometers P-1, P-2, and P-3. The following samples were collected as part of the IPA field activities performed in April and September 2017, unless noted otherwise:

- Groundwater samples were collected from wells MW-5A, MW-12A, and MW-14A (control well).[3] Although not required, MW-12A was also sampled in July 2017 when wells MW-3A, MW-4A, and MW-6A were sampled to further assess the relationship between water-levels and MW-12A water-quality.

- Groundwater samples were collected from piezometers P-1, P-2, and P-3.

- Ponded surface water samples were collected near P-2 (sample designation SW-P-2) and P-3 (sample designation SW-P-3) in April 2017 only. No ponded surface water was observed at, or in the area north of well MW-12A during the July and September 2017 event.

- Liquid samples were collected from LMS primary sumps 1/5 P and 6/7 P, and corresponding secondary (leak detection system) sumps 4/5 S and 6/7 S.

Field water-quality parameters were measured during purging and sampling and recorded on field sampling data sheets (FSDSs) (see Attachment 1). The water quality and LMS samples (including quality control samples such as a field duplicate sample, field blank, and trip blank) were submitted under chain-of-custody documentation to TestAmerica Laboratories (TestAmerica) in Arvada, Colorado. The samples were analyzed for (1) the full list of SSLs parameters (HCO_3, Mg, Na, TDS, Cl, dissolved potassium [K], and TOC), (2) dissolved calcium (Ca) and sulfate (SO_4) to facilitate evaluating the groundwater, surface water, and LMS analytical results using geochemical

[3] There was insufficient volume of groundwater available in well MW-14A during the September 2017 sampling event to allow for purging and sampling. As such, no sample could be collected for laboratory analysis. It is common for well MW-14A (and well MW-22A) screened in the shallow, silt-clay WBZ in this area of the site to be dry or have limited groundwater during the Summer and early Fall months.

analysis (i.e., Piper [Trilinear] and Stiff plots), (3) volatile organic compounds (VOCs), and (4) nitrogen indicator parameters ammonia and nitrate-nitrite.

Integrity Testing, Redevelopment, and Sampling of Wells MW-3A, MW-4A, and MW-6A

Groundwater samples were collected from wells MW-3A, MW-4A, and MW-6A as part of this continued IPA effort, per DEQ's request. Before groundwater samples were collected from these wells, the integrity of MW-3A, MW-4A, and MW-6A was evaluated given that these wells have not been sampled since 1994. The integrity testing involved performing borehole geophysical and down-hole video logging of the wells.

Prior to performing the integrity testing, wells MW-3A, MW-4A, and MW-6A were redeveloped consistent with industry standards in May 2017. The well development forms are provided in Attachment 1, along with the exploratory borehole logs for these wells. Integrity testing was performed by COLOG, Inc., of Lakewood, Colorado, on May 24, 25, and 31, 2017 and June 1, 2017 with field oversight by SCS. Integrity testing of well MW-12A was also performed during this time period. The results of the borehole geophysical and down-hole video logging are presented and discussed in a report prepared by COLOG that is provided in Attachment 2. A digital copy of the video log is provided on the CD included in Attachment 3.

Results of the well integrity assessment suggested that the integrity of the wells had not been compromised and that the wells could be used for obtaining groundwater samples for laboratory analysis. Following receipt and review of the integrity testing results, groundwater samples were collected from wells MW-3A, MW-4A, MW-6A, and MW-12A on July 14 and 18, 2017, consistent with methods and procedures described in the IPA work plan and the approved RL EMP.

Laboratory Quality Assurance/Quality Control Procedures and Results

Laboratory quality assurance/quality control (QA/QC) procedures for water quality samples included analyzing sample surrogate spikes, method blanks, blank spikes, matrix spikes, and matrix spike duplicates. The analytical results and case narratives are included with the laboratory reports in Attachment 4. The laboratory data and QA/QC procedures were reviewed by SCS, consistent with the procedures outlined in the RL's EMP (SCS, 2014), to determine whether the data met QC requirements. A summary of the QA/QC review is provided in Attachment 5. Results of the QA/QC review indicate that the analytical data are acceptable for their intended use.

Installation of Monitoring Devices in Well MW-12A

A water-level transducer and conductivity probe were installed in well MW-12A on May 22, 2017 to concurrently monitor groundwater levels and conductivity at this location. Due to a defective conductivity probe, the original probe installed in May 2017 needed to be replaced; the replacement probe was installed on July 14, 2017.

Consistent with the approved work plan, monitoring of MW-12A groundwater levels and conductance is being performed for a minimum of one year to evaluate seasonal high and low groundwater conditions and the potential mixing of seasonal high groundwater with surface water. The transducer and conductance data through September 2017 were uploaded, and the results are provided in Figure 4 and discussed in a subsequent section of this report.

Assessment of Site Operations on Potential Effects to Well MW-12A Groundwater

The potential effects that hydro-seeding operations (performed in August 2016) had on MW-12A groundwater chemistry, and on the quality of ponded surface water that occurs seasonally in the vicinity of MW-12A, was assessed. The following activities were performed as part of this assessment:

- Investigated the lateral extent of the hydro-seeding activities performed in 2016. The approximate area where hydro-seeding was performed is shown in Figure 1; this included a 24 acre area on the Modules 1 and 2 landfill cover.

- Collected shallow soil samples (between 0.0 and 0.5 foot below ground surface) on July 14 and 18, 2017, from the following locations and analyzed them for nitrate-nitrite (as nitrogen), phosphorus, and potassium: (1) the interim cover area of Modules 1 and 2 where hydro-seeding was completed, (2) background area of site (where hydro-seed was not applied), and (3) near MW-12A to assess the effect of hydro-seeding on the shallow soils in this area (see Figure 1).

The analytical results of the soil sampling are provided in Table 2. The soil analytical results collected as part of this assessment suggest that hydro-seeding was not influencing surface water or groundwater nitrate concentrations. As part of the continuing IPA activities to further evaluate the possible effects of hydro-seeding on surface water and groundwater quality, a sample of the hydro-seed material used at RL will be analyzed. A summary the hydro-seed material analytical results will be provided in the next IPA report to the agency.

DATA EVALUATION AND RESULTS

Groundwater and Surface Water Conditions in the Vicinity of MW-12A

The groundwater elevations measured in April and September 2017 were plotted on the site map and contoured to depict the groundwater potentiometric surface of the shallow WBZ near well MW-12A (see Figures 2 and 3). Groundwater flow in the vicinity of MW-12A based on the April and September 2017 water-level data is to the south, consistent with previous interpretations presented in past annual environmental monitoring reports (AEMRs).

Hydrographs depicting changes in groundwater elevations measured in well MW-12A since January 2015 (before the changes in MW-12A water-quality were observed) are provided in Attachment 6. The hydrographs show the effect of seasonal changes in groundwater elevations

that correlate with periods of high precipitation during the late Fall and extending through the early Spring. It is typically during this time period that ponded surface water accumulates in the low-lying area at and in the area north of MW-12A. As previously noted, ponded surface water was observed in the area adjacent to piezometers P-2 and P-3 in April 2017; however, no ponded surface water was observed at, or in the area north of well MW-12A during the July and September 2017 events.

Results and Finding of MW-12A IPA Groundwater and Surface Water Monitoring Activities

Evaluation of the 2017 analytical data for monitoring well, piezometer, and surface water samples collected as part of the additional MW-12A IPA activities indicated the following:

- Concentrations of inorganic parameters for which SSLs have been established and that were elevated in the MW-12A sample collected in May 2016 have been trending back to typical (background) levels since April 2017 (Table 3). These changes directly correlate to changes in MW-12A groundwater elevations, i.e., inorganic parameter concentrations decrease with decreasing groundwater levels (see MW-12A time-concentration graphs provided in Attachment 6). Laboratory analysis of the MW-12A sample collected in September 2017 showed concentrations of some SSL parameters close to or below background concentrations defined by the established concentration limits, including TOC, TDS, and Cl.

- Results of water-level and conductance monitoring also show a similar relationship, i.e., conductance decrease with decreasing water levels (Figure 4). It is believed that these correlations correspond to periods when ponded surface water accumulates in the vicinity of and immediately north of MW-12A, which also occurs during seasonal periods of high precipitation when MW-12A groundwater levels are very shallow.

- The ionic chemistries of groundwater samples collected from well MW-12A in April, July, and September 2017 are similar to the ionic chemistries of samples historically collected from this well (see geochemical diagrams in Attachment 6). Variations in the ionic chemistry of well MW-12A groundwater appear to be predominantly influenced by variations in the concentrations of Cl and HCO_3. The MW-12A Stiff diagrams (see Attachment 6) also show that the relative concentrations of some anions and cations are trending back towards historical concentrations.

- Inorganic parameter concentrations detected in groundwater samples collected from shallow WBZ wells and piezometers (MW-5A, P-1, and P-2) are typically higher than those detected in well MW-12A groundwater (see Table 3). Inorganic parameter concentrations detected in these wells are similar to those detected in ponded surface water samples collected near piezometers P-2 and P-3 in April 2017, when water-levels in these piezometers were close to or at the surface (see Table 3). As was the case with MW-12A, it is believed that groundwater quality is influenced by the occurrence of ponded surface water present in the immediate vicinity of the piezometers during seasonal periods of high precipitation.

- The overall ionic chemistries of the shallow WBZ groundwater samples (MW-5A, MW-12A, P-1, and P-2) collected in April, July (for MW-12A only), and September 2017 are distinctly different from the ionic chemistries of the LMS samples (see geochemical diagrams in Attachment 6). These results are consistent with previous IPA and historical analytical results which show that the ionic chemistries of the recent (2016 and 2017) shallow WBZ samples do not plot on a mixing line or trend towards the ionic chemistries of the leachate collected from LCRS sump 1/5 (see Attachment 6). If the water-quality changes observed in well MW-12A groundwater were associated with mixing with leachate, it would be expected that a pronounced shift in the geochemical signature of well MW-12A groundwater would plot on an approximate line towards the signature of that other liquid type.

- Ionic chemistries of the shallow WBZ groundwater sample collected from MW-12A in April 2017 is very similar to that of the ponded surface water collected near MW-12A at the same time, including the ponded surface water sample collected adjacent to MW-12A in December 2016 (see geochemical diagrams in Attachment 6). Geochemical analysis of MW-12A groundwater samples collected in July and September 2017 show that the ionic chemistries are returning to background concentrations (see Attachment 6).

- No VOCs were detected in the MW-12A groundwater samples[4], or in the adjacent piezometer P-3 consistent with MW-12A IPA monitoring performed in 2016, and with historical (compliance monitoring) analytical results.

- Low concentrations of four VOCs (benzene[5], chlorobenzene, 1,4-dichlorobenzene, and *cis*-1,2-dichloroethene) were detected in groundwater samples collected from well MW-5A and adjacent piezometer P-1 in April and September 2017 at similar concentrations that were consistent with recent results (see Table 4). Low-level concentrations of two of these VOCs (chlorobenzene, 1,4-dichlorobenzene) were also detected in piezometer P-2 which is also close to MW-05A (see Table 4). It should be noted that VOCs were not detected in the groundwater sample collected in April 2017 from detection well MW-5B (located adjacent to MW-5A and screened in the deep WBZ) consistent with historical results.

---

[4] Acetone was detected in the field duplicate and blank sample collected at MW-12A in April 2017. As noted in the case narrative of TestAmerica' analytical report, the detected acetone concentrations are likely attributed to a laboratory artifact. Results supporting this conclusion include (1) acetone is a common laboratory contaminant, (2) acetone was detected in multiple field blank samples that were prepared with laboratory supplied deionized water, and (3) acetone was only detected in the duplicate sample and not the primary sample collected at MW-12A.

[5] Very low-level concentrations of benzene only slightly above the method reporting limit of 1.0 micrograms per liter were only detected in the groundwater samples collected from MW-05A and P-01A in April 2017 (see Table 4).

Laboratory Analytical Results for MW-3A, MW-4A, and MW-6A Groundwater Samples

The laboratory analytical results of the groundwater samples collected from wells MW-3A, MW-4A, and MW-6A in July 2017 are presented in Tables 5 and 6.[6] The tables include historical analytical data for groundwater samples collected from MW-3A, MW-4A, and MW-6A in 1993 and 1994, which are the last times water-quality monitoring of these wells was performed. Comparison of the analytical data of MW-3A, MW-4A, and MW-6A samples collected in July 2017 with historical data collected in 1993 and 1994 showed the following results:

- No VOCs were detected in groundwater samples collected from MW-3A, MW-4A, and MW-6A in July 2017 consistent with historical results.
- Review of MW-3A, MW-4A, and MW-6A inorganic results indicates that the July 2017 data are generally consistent with historical results with respect to overall chemical makeup, but with individual well samples and parameters showing increasing and decreasing concentrations as follows:
  - MW-3A: Inorganic parameter concentrations in the July 2017 sample were generally consistent with or just slightly higher or lower than historical concentrations.
  - MW-4A: Inorganic parameter concentrations in the July 2017 sample were generally higher by a factor of two to three compared to historical concentrations. Given that this change occurred over an almost 25 year period, it is not considered significant. It should be noted that criterion established by the DEQ for a significant change in water-quality specified in Section 16.4 of RL's SWDP 345 for site compliance wells lists the following as an example of a significant change in groundwater quality: "Detection of a compound an order of magnitude higher than background." Consequently, the 2 to 3 times increase in some parameter concentrations falls well below this significant change criterion especially considering that the July 2017 results are being compared to background concentrations detected almost 25 years ago. Given the very long-time between monitoring events for these wells, the observed changes could be attributed to temporal changes that occur naturally in groundwater systems over a 25 year time period.
  - MW-6A: Concentrations of many inorganic parameters in the July 2017 sample were lower than historical concentrations including ammonia (0.07 to <0.03 mg/L), TDS (280 to 220 mg/L), alkalinity (252 to 91 mg/L), calcium (44 to 27 mg/L), and sodium (30.2 to 24 mg/L). Two parameters (chloride and sulfate) showed higher concentrations in the July 2017 MW-6A sample compared to historical concentrations.

[6] No VOCs were detected in groundwater samples collected from MW-3A, MW-4A, and MW-6A (see laboratory analytical reports provided in Attachment 4). As such, a summary table of VOCs results for these wells is not provided.

Although the absolute concentrations of individual inorganic parameters vary either up or down, the overall chemistry of the recent samples collected in 2017 are similar to the chemistries of samples collected almost 25 years ago. If site leachate had impacted groundwater collected from these wells, it is expected that the ionic chemistry of the samples collected in 2017 would trend towards that of leachate (i.e., on a mixing line between leachate and background groundwater) which is not observed (see geochemical diagrams provided in Attachment 6).

It should be emphasized that none of the other criteria specified in Section 16.4 of RL SWDP for defining a significant change in groundwater quality were met for any of the samples collected from wells MW-4A and MW-6A collected in July 2017. No VOCs were detected, and with the exception of TDS in MW-4A sample, concentrations were not above the primary or secondary drinking water standards. The TDS concentration detected in MW-4A groundwater was only slightly above the secondary standard of 500 mg/L and not signifiantly above background levels (420 mg/L on December 6, 1993).

Furthermore, MW-3A, MW4A, and MW-6A are located adjacent to the footprint of the landfill and do not define RL's point of compliance. The DEQ criteria for defining a significant change apply only to compliance wells. As such, the DEQ criteria for evaluating a significant change (noted above) are only being applied to the MW-3A, MW-4A and MW-6A results as an evaluation method for informational purposes.

CONCLUSIONS AND RECOMMENDATIONS

The monitoring well MW-12A IPA results and findings indicate that the source of the change in the inorganic chemistry of well MW-12A groundwater is not related to a release from the LMS, but is likely related to the influence of surface water that ponded in the area near and north of MW-12A where it infiltrated to shallow groundwater. During periods of low or no rainfall when surface water does not occur and no ponded water is present to locally recharge groundwater, parameter concentrations decrease since they are not influenced by ponded surface water. The parameter concentrations in ponded surface water collected in December 2016 and April 2017 suggest that this ponded surface water is possibly influenced by stormwater run-off from portions of the landfill directly north of the low-lying area where surface water ponding occurs seasonally. Whether this is occurring needs to be more thoroughly assessed and will be at our project completion.

Consistent with the approved IPA work plan, two additional water-quality monitoring events are scheduled in the fourth (Fall) quarter 2017 and first (Winter) quarter 2018. The source and influence of ponded surface water on MW-12A groundwater quality, as well as other potential sources, will be further investigated during these events.

SCS ENGINEERS

Louis Caruso
Project Director/Vice President

David Lamadrid, RG
Project Geologist

REGISTERED OREGON DAVID LAMADRID G1905 GEOLOGIST Expires 2/1/18

cc: Mark Verwiel; WM
Morgan Ireland; WM
Greg Hemmen; WM
Nick Godfrey; RLC

Attachments:

Table 1: Groundwater Monitoring Network Construction Information
Table 2: Nitrate-Nitrite, Phosphorus, and Potassium in Soil Samples
Table 3 Water Quality Monitoring Results of MW-12A Groundwater and Other Nearby Monitoring Locations
Table 4: VOCs Detected in Water Quality Samples Collected as Part of MW-12A IPA
Table 5: Field and Indicator Parameters in MW-3A, MW-4A, and MW-6A Groundwater Samples
Table 6: Cations and Anions in MW-3A, 4A, and 6A Groundwater Samples
Figure 1: Site Plan and Monitoring Locations
Figure 2: Shallow Water-Bearing Zone Potentiometric Surface Contours, April 17, 2017
Figure 3: Shallow Water-Bearing Zone Potentiometric Surface Contours, September 11, 2017
Figure 4: Well MW-12A Hydrograph and Conductivity Time-Series Graph

Attachment 1: Fieldwork Documentation
Attachment 2: Geophysical Logging Results (Report by COLOG dated June 27, 2017)
Attachment 3: MW-3A, MW-4A, MW-6A, and MW-12A Down-hole Video Logs (including Videos on the attached DVD)
Attachment 4: Laboratory Analytical Reports
Attachment 5: QA/QC Review Documentation
Attachment 6: Time-Concentration Plots and Geochemical Diagrams

REFERENCES

Oregon Department of Environmental Quality (DEQ), 2017, Letter (re: Work Plan to Continue Informal Preliminary Assessment Activities to Evaluate Monitoring Well MW-12A Groundwater Quality Riverbend Landfill, McMinnville, Oregon), to J. Denson, Riverbend Landfill Company, McMinnville, Oregon, from B. Mason, DEQ Western Region, Eugene, Oregon, April 14.

SCS Engineers (SCS), 2014, Environmental Monitoring Plan, Riverbend Landfill, Yamhill County, Oregon, prepared for Riverbend Landfill Company, Riverbend Landfill, by SCS, Portland, Oregon December 14.

SCS Engineers, 2016, Report Presenting the Results of an Informal Preliminary Assessment to Evaluate Changes in Monitoring Well MW-12A Groundwater Quality, Riverbend Landfill, Yamhill County, Oregon, prepared for Riverbend Landfill Company, Riverbend Landfill, by SCS, Portland, Oregon, November 14.

SCS Engineers (SCS), 2017, Work Plan to Continue Informal Preliminary Assessment Activities to Evaluate Monitoring Well MW-12A Groundwater Quality: Riverbend Landfill, McMinnville, Oregon, prepared for Riverbend Landfill Company, McMinnville, Oregon, by SCS, Portland, Oregon, April 13.

Waste Management (WM), 2016, Letter (re: Notification of the MW-12A Groundwater Confirmation Resampling Results, Riverbed Landfill Solid Waste Disposal Site Permit (SWDP) No. 345, Yamhill County, Oregon) to B. Schwarz, DEQ, The Dalles, Oregon, from J. Denson, WM, Portland, Oregon, July 13.

Waste Management (WM), 2017, Letter (re: Notification of the MW-12A Groundwater Confirmation Resampling Results, Riverbed Landfill Solid Waste Disposal Site Permit (SWDP) No. 345, Yamhill County, Oregon) to B. Schwarz, DEQ, The Dalles, Oregon, from J. Denson, WM, Portland, Oregon, February 1.

TABLES

Table 1
Groundwater Monitoring Network Construction Information
Riverbend Landfill

Well Designation	Hydro-stratigraphic Unit Screened	Date Installation Completed	Eastings[a]	Northings[a]	Ground Elevation[a] (ft-msl)	TOC Elevation[a] (ft-msl)	Boring Depth (ft-bgs)	Boring Diameter (inches)	Well Diameter (inches)	Well Screen Interval (ft-bgs)	Sand Pack Interval (ft-bgs)	Well Seal Interval (ft-bgs)
Monitoring Wells												
MW-1A	Sand-Gravel	6-Sep-89	3999.9	4210.2	153.40	155.30	61.5	10	2	50.0 to 60.0	48.0 to 61.5	3.0 to 48.0
MW-1B	Silt-Clay	8-Sep-89	4001.1	4214.5	153.40	155.00	26.5	10	2	15.0 to 25.0	13.0 to 26.5	3.0 to 13.0
MW-2R	Silt-Clay	29-Jul-16	4966.1	4210.2	144.50	147.02	31.0	10	2	20.0 to 30.0	18.0 to 31.0	3.0 to 18.0
MW-5A	Silt-Clay	8-Sep-92	5490.7	2069.0	132.00	138.73	28.0	10	2	18.0 to 28.0	16.0 to 28.0	3.0 to 16.0
MW-5B	Sand-Gravel	9-Mar-92	5481.2	2073.1	132.80	138.88	44.7	10	2	42.0 to 45.0	40.0 to 45.0	3.0 to 40.0
MW-9A	Silt-Clay	21-Oct-93	6486.5	3663.2	128.10	128.42	24.5	8	2	14.3 to 23.8	27.0 to 40.0	2.0 to 11.0
MW-9BR	Sand-Gravel	24-Aug-94	5903.2	3760.8	124.76	127.40	36.5	10	2	28.2 to 33.7	27.0 to 37.5	2.0 to 26.0
MW-10A	Silt-Clay	28-Oct-93	3501.0	3805.0	150.75	153.21	28.3	8	2	17.3 to 26.8	14.0 to 28.3	2.2 to 14.0
MW-10B	Sand-Gravel	27-Oct-93	3492.5	3795.5	150.76	152.87	69.0	10	2	44.3 to 53.8	40.9 to 55.3	2.0 to 40.9
MW-12A	Silt-Clay	19-Jul-95	5650.8	1676.5	123.80	126.81[b]	25.5	10	2	15.3 to 24.8	12.0 to 25.5	0.5 to 15.3
MW-12B	Sand-Gravel	19-Jul-95	5643.6	1676.5	124.00	126.05[b]	49.9	10	2	34.3 to 43.8	31.0 to 45.0	0.5 to 31.0
MW-14A	Silt-Clay	16-Oct-96	4863.8	1652.6	118.80	121.87	21.0	10	2	10.7 to 20.2	7.8 to 21.0	2.2 to 7.8
MW-14B	Sand-Gravel	15-Oct-96	4854.1	1653.7	119.10	123.32	42.0	10	2	31.7 to 41.2	2.85 to 42.0	2.2 to 28.5
MW-15A	Silt-Clay	21-Oct-96	6385.5	2209.1	126.00	130.07	22.8	10	2	12.5 to 22.0	10.0 to 22.8	2.0 to 10.0
MW-15B	Sand-Gravel	21-Oct-96	6393.5	2214.7	126.00	129.73	44.0	10	2	33.2 to 42.7	30.2 to 44.0	2.0 to 30.2
MW-16A	Silt-Clay	23-Oct-96	7010.7	2675.6	126.30	128.89	23.5	10	2	13.5 to 23.0	11.0 to 23.5	1.5 to 11.0
MW-16B	Sand-Gravel	23-Oct-96	7004.3	2670.7	126.30	128.95	45.0	10	2	34.8 to 44.3	31.6 to 45.0	2.0 to 31.6
MW-17A	Silt-Clay	26-Sep-00	1221.4	1431.4	151.12	153.83	24.5	10	2	14.0 to 24.0	11.5 to 24.5	0.5 to 11.5
MW-18A	Silt-Clay	26-Sep-00	2612.9	2938.0	146.77	148.77	26.0	10	2	13.5 to 23.5	11.0 to 24.0	0.5 to 11.0
MW-18B	Sand-Gravel	26-Sep-00	2621.6	2931.1	146.58	148.57	62.0	10	2	47.0 to 53.0	45.0 to 53.0	0.5 to 45.0
MW-19A	Silt-Clay	27-Sep-00	2537.0	1437.0	149.05	151.27	30.0	10	2	18.0 to 28.0	18 .5 to 28.5	0.5 to 16.5
MW-20A	Silt-Clay	26-Sep-00	3776.2	2490.1	127.20	129.92	21.0	10	2	10.0 to 20.0	8.5 to 21.0	0.5 to 8.5
MW-20B	Sand-Gravel	26-Sep-00	3759.5	2491.2	127.10	129.72	40.0	10	2	29.0 to 34.0	26.5 to 95.3	0.5 to 26.5
MW-21A	Silt-Clay	26-Sep-00	4645.5	1945.3	116.18	120.02	13.0	10	2	8.0 to 13.0	7.0 to 23.0	0.5 to 7.0
MW-21B	Sand-Gravel	26-Sep-00	4631.3	1941.6	116.56	119.53	34.0	10	2	21.0 to 26.0	18.5 to 27.0	0.5 to 18.5
MW-22A	Silt-Clay	23-Sep-10	4105.3	1578.5	123.50	125.38	22.5	10	2	10.0 to 20.0	8.0 to 21.0	2.0 to 8.0
MW-22B	Sand-Gravel	23-Sep-10	4110.8	1584.6	123.50	125.43	38.0	10	2	27.0 to 37.0	25.0 to 38.0	2.0 to 25.0
MW-23A	Silt-Clay	18-Aug-10	3281.9	1515.9	129.00	131.79	28.0	10	2	16.0 to 26.0	14.0 to 28.0	2.0 to 14.0
MW-23B	Sand-Gravel	17-Aug-10	3290.0	1516.5	129.00	131.60	42.0	10	2	36.5 to 41.5	34.5 to 42.0	2.0 to 34.5
MW-24A	Silt-Clay	20-Aug-10	2140.0	984.2	147.50	149.93	26.0	10	2	15.0 to 25.0	13.0 to 26.0	2.0 to 13.0
MW-25A	Silt-Clay	22-Jul-15	4218.8	4114.0	153.0	155.62	26.6	6	2	15.0 to 25.0	13.0 to 26.6	2.0 to 13.0
MW-25B	Sand-Gravel	22-Jul-15	4208.3	4114.6	152.8	155.54	90.0	6 and 7	2	75.0 to 85.0	73.0 to 86.0	2.0 to 73.0
Piezometers												
MW-3A	Silt-Clay	23-Jun-93	4430.9	2493.9	138.20	140.81	35.0	8	2	24.0 to 34.0	21.0 to 35.0	2.2 to 21.0
MW-3B	Sand-Gravel	28-Jun-93	4415.6	2496.3	137.80	140.57	63.5	10	2	45.0 to 55.0	42.0 to 56.0	36.8 to 42.0
MW-4A	Silt-Clay	25-May-93	4798.0	2238.7	139.46	142.31	36.0	8	2	26.0 to 36.0	22.5 to 36.0	2.0 to 22.5
MW-4B	Sand-Gravel	10-Jun-93	4805.5	2239.4	139.24	141.81	72.0	10	2	52.0 to 62.0	49.0 to 63.0	47.0 to 49.0
MW-6A	Silt-Clay	24-May-93	6043.5	2437.7	127.00	128.29[b]	22.5	8	2	11.5 to 21.5	8.5 to 22.5	2.0 to 8.5
MW-6B	Sand-Gravel	9-Jun-93	6054.4	2443.0	127.00	128.59	56.0	8	2	36.0 to 46.0	34.2 to 47.0	2.5 to 34.2
P-01	Silt-Clay	21-Dec-92	5482.1	2038.3	123.20	126.02[b]	19.0	8	2	8.0 to 18.0	5.9 to 19.0	2.0 to 5.9
P-02	Silt-Clay	22-Dec-92	5498.5	1994.0	121.10	124.02[b]	18.0	8	2	6.8 to 16.8	5.0 to 18.0	1.0 to 5.0
P-03	Silt-Clay	23-Jun-93	5601.9	1754.2	120.90	123.89[b]	19.5	8	2	9.0 to 19.0	7.3 to 19.5	2.0 to 9.3
P-05A	Silt-Clay	13-Oct-05	3612.4	2875.1	138.60	140.74	20.0	3.5	1	9.7 to 19.5	7.5 to 20.0	0.5 to 7.5
P-06A	Silt-Clay	13-Oct-05	3363.7	2566.2	129.30	131.58	20.0	3.5	1	9.7 to 19.5	7.5 to 20.0	0.5 to 7.5
P-07A	Silt-Clay	3-Feb-12	3804.2	2168.8	145.70	147.90	31.0	10	2	16.0 to 26.0	14.0 to 26.5	2.0 to 14.0
GT10-1	Silt-Clay	10-Sep-10	3444.2	3211.7	143.80	145.56	66.5	5.9	2	15.0 to 25.0	13.0 to 30.0	2.0 to 13.0/ 30.0 to 65.0
GT10-11	Silt-Clay	9-Sep-10	2518.1	1781.3	149.30	150.08	61.0	5.9	2	15.0 to 25.0	13.0 to 30.0	2.0 to 13.0 / 30.0 to 60.0
GT10-12	Silt-Clay	14-Sep-10	1736.5	1971.4	150.60	152.41	55.0	5.9	2	15.0 to 25.0	13.0 to 30.0	2.0 to 13.0/ 30.0 to 65.0
SA-BH-1	Silt-Clay	24-Aug-10	716.6	3175.5	152.80	155.21	23.0	10	2	12.0 to 22.0	10.0 to 23.0	2.0 to 10.0
SA-BH-3	Silt-Clay	24-Aug-10	813.1	1679.7	152.80	155.07	26.5	10	2	12.0 to 22.0	10.0 to 23.5	2.0 to 10/ 23.5 to 25.0
SA-BH-5	Silt-Clay	23-Aug-10	1773.0	586.9	148.60	151.01	28.5	10	2	18.0 to 28.0	15.5 to 28.5	2.0 to 15.5
SA-BH-6	Silt-Clay	29-Sep-10	2895.0	597.7	123.80	125.93	25.0	10	2	14.0 to 24.0	12.0 to 25.0	2.0 to 12.0

NOTE:

Indicates well or piezometer that was sampled as part of the monitoring well MW-12A Informal Preliminary Assessment (IPA).

NA = not available; TOC = top of casing; ft-msl = feet mean sea level; ft-bgs = feet below ground surface.

[a] All monitoring wells and piezometers were re-surveyed in July 2013.

[b] Re-surveyed in July 2017.

Table 2
Nitrate-Nitrite, Phosphorus, and Potassium Concentrations in Soil Samples
Riverbend Landfill

Monitoring Location	Date	Percent Moisture (%)	Nitrate-Nitrite (mg/Kg)	Total Phosphorus (mg/Kg)	Total Potassium (mg/Kg)
SS-1-12A	14-Jul-17	17.8	1.0 U	1,000	2,000
SS-2-P2	14-Jul-17	26.3	130	1,500	2,300
SS-3-Upgradient	18-Jul-17	11.4	4.9	4,000	2,400
SS-4-Mod3	18-Jul-17	16.8	17	1,100	1,900
SS-5-Mod2	18-Jul-17	2.5	37	560	3,500
SS-6-Mod1	18-Jul-17	18.8	1.0 U	830	1,600

NOTES:
mg/Kg = milligrams per kilogram; U = not detected at or above the reporting limit.

Table 3
Water Quality Monitoring Results of MW-12A Groundwater and Other Nearby Monitoring Locations
Riverbend Landfill

Monitoring Location	Depth to Water (ft-bgs)	Ammonia as Nitrogen (mg/L)	Nitrate-Nitrite as Nitrogen (mg/L)	Calcium Dissolved (mg/L)	Site-Specific Limits (SSLs)[a]							
					Bicarbonate Alkalinity (mg/L)	Chloride (mg/L)	Magnesium Dissolved (mg/L)	Potassium Dissolved (mg/L)	Sodium Dissolved (mg/L)	Sulfate (mg/L)	Total Dissolved Solids (mg/L)	Total Organic Carbon (mg/L)
Groundwater												
MW-12A Concentration Limits		---	---	---	*81.3*	*63.4*	*11.5*	*1.20*	*21.8*	---	*240*	*3.2*
MW-12A May 2016 Results	11.66	0.030 U	0.05 U	35	**110**	57	**15**	0.86	**29**	18	**250**	2.5
MW-12A June 2016 Results (Re)	15.47	NS	NS	NS	**93**	NS	**15**	NS	**24**	NS	220	NS
MW-12A June 2016 Results (Re)(DUP)	15.47	NS	NS	NS	**97**	NS	**15**	NS	**24**	NS	230	NS
MW-12A August 2016 Results	17.71	NS	NS	28	**84**	53	**13**	0.57	21	19	220	1.3
MW-12A November 2016 Results	3.74	0.031	18	56	**89**	**88**	**22**	1.0	**42**	28	**410**	**5.0**
MW-12A-NP December 2016 Results[b]	3.75	0.053	11	46	**100**	**86**	**18**	0.58	**32**	28	**340**	**4.8**
MW-12A December 2016 Results (Re)	3.75	0.034	8.9	56	**120**	**78**	**19**	0.75	**40**	27	**330**	**6.0**
MW-12A December 2016 Results (Re)(DUP)	3.75	0.11	9.3	50	**120**	**78**	**18**	0.76	**38**	26	**330**	**6.2**
MW-12A-2 December 2016 Results[c]	3.75	0.25	8.4	47	**120**	**74**	**18**	0.70	**37**	25	**320**	**7.9**
MW-12A April 2017 Results	6.27	0.030 U	2.7	44	**130**	**81**	**17**	1.1	**41**	23	**300**	**4.4**
MW-12A April 2017 Results (DUP)	6.27	0.030 U	2.8	42	**130**	**81**	**17**	0.97	**40**	23	**320**	**4.3**
MW-12A July 2017 Results	15.43	0.030 U	0.51	36	**110**	**65**	**15**	0.53	**34**	23	**280**	3.0
MW-12A September 2017 Results	17.39	0.030 U	0.46	35	**99**	**67**	**15**	0.62	**27**	22	**250**	2.2
MW-12A September 2017 Results (DUP)	17.39	0.030 U	0.33	39	**99**	**65**	**15**	0.70	**31**	22	**250**	2.1
MW-14A Concentration Limits (Control Well)		---	---	---	*148*	*33.4*	*16.5*	*0.85*	*15.6*	---	*282*	*3.1*
MW-14A May 2016 Results	13.88	0.030 U	0.10	34	150	12	16	0.50 U	11	13	190	1.2
MW-14A November 2016 Results	12.09	0.030 U	0.60	36	140	10	15	0.50 U	12	13	200	1.0 U
MW-14A April 2017 Results	9.67	0.030 U	0.12	24	110	5.8	9.9	0.50 U	8.8	14	160	1.0 U
MW-14A September 2017 Results	Dry	Dry	Dry	Dry	Dry	Dry	Dry	Dry	Dry	Dry	Dry	Dry
MW-5A												
MW-5A May 2015 Results	14.50	NS	NS	62	170	110	27	0.50 U	29	10	NS	NS
MW-5A August 2016 Results	20.19	NS	NS	65	230	100	31	0.50 U	29	8.3	410	3.3
MW-5A April 2017 Results	8.97	0.17	0.05 U	86	300	110	39	0.50 U	33	6.9	460	3.8
MW-5A September 2017 Results	19.90	0.13	0.05 U	79	250	110	34	0.50 U	32	6.3	430	3.5
Piezometers Near MW-12A and MW-5A												
P-01 August 2016 Results	12.28	NS	NS	71	260	100	38	0.50 U	31	9.3	460	3.4
P-01 April 2017 Results	0.49	0.30	0.05 U	88	370	100	48	0.50 U	32	9.5	550	5.8
P-01 September 2017 Results	11.92	0.071	0.05 U	66	270	110	41	0.50 U	30	8.4	450	3.8
P-02 August 2016 Results	10.99	NS	NS	74	190	180	45	0.50 U	33	30	490	5.3
P-02 April 2017 Results	-0.19	0.12	0.05 U	99	250	230	57	0.50 U	41	35	630	5.4
P-02 September 2017 Results	10.60	0.081	0.05 U	110	270	240	62	0.50 U	43	35	710	6.3

Table 3
Water Quality Monitoring Results of MW-12A Groundwater and Other Nearby Monitoring Locations
Riverbend Landfill

Monitoring Location	Depth to Water (ft-bgs)	Ammonia as Nitrogen (mg/L)	Nitrate-Nitrite as Nitrogen (mg/L)	Calcium Dissolved (mg/L)	Site-Specific Limits (SSLs)[a] Bicarbonate Alkalinity (mg/L)	Chloride (mg/L)	Magnesium Dissolved (mg/L)	Potassium Dissolved (mg/L)	Sodium Dissolved (mg/L)	Sulfate (mg/L)	Total Dissolved Solids (mg/L)	Total Organic Carbon (mg/L)
P-03 October 2016 Results	1.44	NS	NS	66	90	120	27	1.3	52	47	480	5.0
P-03 April 2017 Results	1.72	0.36	8.9	62	170	110	25	1.3	62	33	430	5.2
P-03 September 2017 Results	13.72	0.030 U	3.0	33	110	59	14	0.66	39	28	170	2.6
Surface Water												
Surface Water Near MW-12A												
SW-MW-12A December 2016 Results[d]	---	1.5	5.9	53	140	78	17	2.9	45	26	350	5.5
SW-1 (SW-P-3) April 2017 Results[e]	---	7.9	0.2	100	460	110	36	12	110	21	270	26
SW-2 (SW-P-2) April 2017 Results[f]	---	2.2	18	70	350	140	35	13	130	20	750	23
Leachate Management Systems												
1/5 P May 2016 Results	---	810	0.05 U	100	2,300	2,300	270	470	1,800	1.0 U	7,900	360
1/5 P August 2016 Results	---	NS	NS	84	5,700	3,300	220	410	2,400	1.2 U	8,600	770
1/5 P April 2017 Results	---	910	0.062	99	5,000	1,700	140	420	1,400	4.6 U	5,100	410
1/5 P September 2017 Results	---	1,200	0.05 U	92	7,400	3,500	190	630	2,500	4.6 U	10,000	890
4/5 S May 2016 Results	---	2.8	0.05 U	120	670	45	52	5.4	79	1.0 U	750	9.4
4/5 S August 2016 Results	---	NS	NS	120	650	78	59	5.0	85	1.0 U	800	15
4/5 S April 2017 Results	---	2.1	0.05 U	110	640	43	47	4.0	73	1.0 U	780	8.1
4/5 S September 2017 Results	---	2.5	0.05 U	150	670	130	66	5.6	100	1.0 U	940	22
6/7 P April 2016 Results	---	340	0.057	250	2,500	1,200	170	87	940	37	5,100	240
6/7 P April 2017 Results	---	430	0.35	220	3,800	1,800	180	160	1,200	7.4	5,200	250
6/7 P September 2017 Results	---	600	0.19	130	3,600	1,900	130	270	1,500	1.2 U	5,200	350
6/7 S April 2016 Results	---	130	0.05 U	290	2,200	970	190	56	910	1.0 U	3,800	170
6/7 S April 2017 Results	---	220	0.05 U	260	3,200	1,200	200	110	1,100	4.6 U	4,400	200
6/7 S September 2017 Results	---	160	0.05 U	200	2,200	970	140	69	680	1.0 U	3,400	160

NOTES:

ft-bgs = feet below ground surface; mg/L = milligrams per liter; --- = not applicable; Re = resample; Dup = field duplicate sample; U = not detected at or above the reporting limit;

NS = parameter not required to be sampled and analyzed during the event; Dry = well dry during monitoring event and no groundwater was available for sample collection.

[a] Concentration above three or more SSLs in a single compliance monitoring well during a monitoring event not previously reported and explained to the DEQ will trigger verification resampling. Verification of concentrations above three or more SSLs would require follow-up actions, consistent with Section 11.5.3 of the environmental monitoring plan.

[b] No purge (NP) groundwater sample collected from MW-12A prior to the verification sample which was collected by the standard purge method (three casing volume purge).

[c] MW-12A groundwater sample collected after a total of 10 casing volumes were purged (36 gallons).

[d] Surface water sample collected near MW-12A where ponded surface water was observed.

[e] Surface water sample collected approximately 100 feet north of piezometer P-03 where ponded surface water was observed.

[f] Surface water sample collected from the ponded surface water that was observed around piezometer P-02.

Table 4
Volatile Organic Compounds Detected in Water Quality Samples Collected as Part of the MW-12A IPA (µg/L)
Riverbend Landfill

Sample Location	Sample Date	Acetone	Benzene	2-Butanone (MEK)	Chlorobenzene	1,4-Dichlorobenzene	cis-1,2-Dichloroethene	Ethylbenzene	4-Isopropyltoluene	Isopropylbenzene	Naphthalene	4-Methyl-2-pentanone	Toluene	1,2,4-Trimethylbenzene	1,3,5-Trimethylbenzene	Total Xylenes
Groundwater																
MW-5A	18-Apr-17	10 U	**1.1**	6.0 U	**3.1**	**6.0**	**1.8**	1.0 U	1.0 U	1.0 U	1.0 U	5.0 U	1.0 U	1.0 U	1.0 U	2.0 U
MW-5A	12-Sep-17	10 U	1.0 U	6.0 U	**2.0**	**4.6**	**1.2**	1.0 U	1.0 U	1.0 U	1.0 U	5.0 U	1.0 U	1.0 U	1.0 U	2.0 U
MW-12A	19-Apr-17	10 U	1.0 U	6.0 U	1.0 U	1.0 U	1.0 U	1.0 U	1.0 U	1.0 U	1.0 U	5.0 U	1.0 U	1.0 U	1.0 U	2.0 U
MW-12A (DUP)	19-Apr-17	**12**	1.0 U	6.0 U	1.0 U	1.0 U	1.0 U	1.0 U	1.0 U	1.0 U	1.0 U	5.0 U	1.0 U	1.0 U	1.0 U	2.0 U
MW-12A (FB)	19-Apr-17	**12**	1.0 U	6.0 U	1.0 U	1.0 U	1.0 U	1.0 U	1.0 U	1.0 U	1.0 U	5.0 U	1.0 U	1.0 U	1.0 U	2.0 U
MW-12A	14-Jul-17	10 U	1.0 U	6.0 U	1.0 U	1.0 U	1.0 U	1.0 U	1.0 U	1.0 U	1.0 U	5.0 U	1.0 U	1.0 U	1.0 U	2.0 U
MW-12A	12-Sep-17	10 U	1.0 U	6.0 U	1.0 U	1.0 U	1.0 U	1.0 U	1.0 U	1.0 U	1.0 U	5.0 U	1.0 U	1.0 U	1.0 U	2.0 U
MW-12A (DUP)	12-Sep-17	10 U	1.0 U	6.0 U	1.0 U	1.0 U	1.0 U	1.0 U	1.0 U	1.0 U	1.0 U	5.0 U	1.0 U	1.0 U	1.0 U	2.0 U
MW-14A	19-Apr-17	10 U	1.0 U	6.0 U	1.0 U	1.0 U	1.0 U	1.0 U	1.0 U	1.0 U	1.0 U	5.0 U	1.0 U	1.0 U	1.0 U	2.0 U
P-01	18-Apr-17	**10**	**1.1**	6.0 U	**3.7**	**7.3**	**1.4**	1.0 U	1.0 U	1.0 U	1.0 U	5.0 U	1.0 U	1.0 U	1.0 U	2.0 U
P-01	12-Sep-17	10 U	1.0 U	6.0 U	**2.3**	**5.2**	**2.0**	1.0 U	1.0 U	1.0 U	1.0 U	5.0 U	1.0 U	1.0 U	1.0 U	2.0 U
P-02	20-Apr-17	10 U	1.0 U	6.0 U	**2.0**	**4.3**	1.0 U	1.0 U	1.0 U	1.0 U	1.0 U	5.0 U	1.0 U	1.0 U	1.0 U	2.0 U
P-02	12-Sep-17	10 U	1.0 U	6.0 U	**2.1**	**3.4**	1.0 U	1.0 U	1.0 U	1.0 U	1.0 U	5.0 U	1.0 U	1.0 U	1.0 U	2.0 U
P-03	18-Apr-17	10 U	1.0 U	6.0 U	1.0 U	1.0 U	1.0 U	1.0 U	1.0 U	1.0 U	1.0 U	5.0 U	1.0 U	1.0 U	1.0 U	2.0 U
P-03	12-Sep-17	10 U	1.0 U	6.0 U	1.0 U	1.0 U	1.0 U	1.0 U	1.0 U	1.0 U	1.0 U	5.0 U	1.0 U	1.0 U	1.0 U	2.0 U
Surface Water																
SW-1 (SW-P-3)[a]	18-Apr-17	**16**	1.0 U	6.0 U	1.0 U	1.0 U	1.0 U	1.0 U	1.0 U	1.0 U	1.0 U	5.0 U	**18**	1.0 U	1.0 U	2.0 U
SW-2 (SW-P-2)[b]	18-Apr-17	10 U	1.0 U	6.0 U	1.0 U	1.0 U	1.0 U	1.0 U	1.0 U	1.0 U	1.0 U	5.0 U	1.0 U	1.0 U	1.0 U	2.0 U
Leachate Management System																
1/5 P	18-Apr-17	**36**	**3.3**	**17**	1.0 U	**3.5**	**2.8**	**13**	**3.3**	**1.2**	**5.9**	**6.2**	**7.4**	**4.9**	**1.8**	**26**
1/5 P	12-Sep-17	**52**	**3.1**	**13**	1.0 U	**3.0**	**1.7**	**11**	**2.3**	**1.2**	**6.3**	**7.7**	**9.3**	**3.8**	**1.4**	**26**
4/5 S	18-Apr-17	10 U	1.0 U	6.0 U	1.0 U	1.0 U	1.0 U	1.0 U	1.0 U	1.0 U	1.0 U	5.0 U	1.0 U	1.0 U	1.0 U	2.0 U
4/5 S	12-Sep-17	10 U	1.0 U	6.0 U	1.0 U	1.0 U	1.0 U	1.0 U	1.0 U	1.0 U	1.0 U	5.0 U	1.0 U	1.0 U	1.0 U	2.0 U
6/7 P	18-Apr-17	**33**	**1.5**	**17**	1.0 U	1.0 U	1.0 U	**1.6**	1.0 U	1.0 U	**4.8**	5.0 U	1.0 U	1.0 U	1.0 U	**2.2**
6/7 P	12-Sep-17	**310**	**2.4**	**150**	1.0 U	**1.9**	1.0 U	**7.2**	1.0 U	**1.4**	**11**	**5.8**	**2.6**	**3.0**	1.0 U	**12**
6/7 S	18-Apr-17	**15**	**2.6**	6.0 U	1.0 U	1.0 U	1.0 U	1.0 U	1.0 U	1.0 U	**4.9**	5.0 U	1.0 U	1.0 U	1.0 U	2.0 U
6/7 S	12-Sep-17	10 U	**1.5**	6.0 U	1.0 U	1.0 U	1.0 U	1.0 U	1.0 U	1.0 U	**3.1**	5.0 U	1.0 U	1.0 U	1.0 U	2.0 U

NOTE:

U = not detected at or above the reporting limit; ug/L = micrograms per liter.

[a] Surface water sample collected approximately 100 feet north of piezometer P-03 where ponded surface water was observed.

[b] Surface water sample collected from the ponded surface water that was observed around piezometer P-02.

Table 5
Field and Indicator Parameters in MW-3A, MW-4A, and MW-6A Groundwater Samples
Riverbend Landfill

Monitoring Location	Date	Ammonia as Nitrogen (mg/L)	Nitrate as Nitrogen (mg/L)	Nitrate-Nitrite as Nitrogen (mg/L)	Total Dissolved Solids (mg/L)	Total Organic Carbon (mg/L)	Field Parameters				
							pH (S.U.)	Temperature (^{o}C)	Dissolved Oxygen (mg/L)	Specific Conductance (µS/cm)	ORP (mV)
MW-3A	9-Jul-93	0.06	0.2 U	NT	526	3.9	6.14	15.0	5.8	766	NT
MW-3A	9-Jul-93	0.1	0.2 U	NT	513	4.0	6.14	15.0	5.8	766	NT
MW-3A	6-Dec-93	0.15	0.2 U	NT	559	3.8	6.82	13.5	1.0	776	NT
MW-3A	6-Dec-93	0.08	0.05	NT	650	5.0	6.20	11.5	NT	949	NT
MW-3A	18-Mar-94	0.05 U	0.2 U	NT	576	4.6	6.02	13.5	0.5	1,008	NT
MW-3A	14-Jun-94	0.05 U	0.2 U	NT	578	3.6	6.19	14.0	2.92	690	NT
MW-3A	18-Jul-17	0.030 U	NT	0.050 U	590	3.2	6.04	14.8	0.72	1,042	71.8
MW-4A	9-Jul-93	NT	NT	NT	NT	NT	6.04	15.0	4.7	360	NT
MW-4A	6-Dec-93	0.06	0.2 U	NT	289	2.4	5.99	12.5	5.6	491	NT
MW-4A	6-Dec-93	0.1	0.02 U	NT	420	3.0	6.00	12.4	NT	447	NT
MW-4A	17-Mar-94	0.2	0.2 U	NT	282	2.0	6.17	13.0	1.1	524	NT
MW-4A (Dup)	17-Mar-94	0.05 U	0.2 U	NT	277	2.0	6.17	13.0	1.1	524	NT
MW-4A	14-Jun-94	4.31	0.2 U	NT	272	2.0	5.87	14.0	0.76	420	NT
MW-4A (Dup)	14-Jun-94	0.05 U	0.2 U	NT	285	1.7	5.87	14.0	0.76	420	NT
MW-4A	14-Jul-17	0.067	NT	0.050 U	540	5.6	5.87	15.4	0.56	1,021	83.0
MW-4A (Dup)	14-Jul-17	0.074	NT	0.050 U	520	5.3	5.87	15.4	0.56	1,021	83.0
MW-6A	9-Jul-93	0.21	0.4	NT	300	7.3	6.24	14.5	6.3	504	NT
MW-6A	7-Dec-93	0.43	0.2 U	NT	304	2.0	6.89	13.5	5.3	559	NT
MW-6A	7-Dec-93	0.53	0.21	NT	338	3.0	7.00	12.2	NT	551	NT
MW-6A	17-Mar-93	1.12	0.5	NT	307	1.7	6.70	13.0	1.7	535	NT
MW-6A	14-Jun-94	0.07	0.3	NT	280	1.2	6.80	14.0	0.4	429	NT
MW-6A	14-Jul-17	0.030 U	NT	0.050 U	220	1.6	5.94	13.9	1.00	338	68.7

NOTES:
mg/L = milligrams per liter; Dup = field duplicate sample; U = not detected at or above the reporting limit; NT = parameter not sampled or analyzed during the event.

Table 6
Cations and Anions in MW-3A, 4A, and 6A Groundwater Samples
Riverbend Landfill

Monitoring Location	Date	Bicarbonate Alkalinity (mg/L)	Chloride (mg/L)	Sulfate (mg/L)	Calcium Dissolved (mg/L)	Magnesium Dissolved (mg/L)	Potassium Dissolved (mg/L)	Sodium Dissolved (mg/L)
MW-3A	9-Jul-93	378	53	6.5	104	34.6	2 U	29.4
MW-3A (Dup)	9-Jul-93	390	53	6.4	99.2	33.4	2 U	28.8
MW-3A	6-Dec-93	415	52	7.1	90.0	33.2	2 U	33.4
MW-3A	6-Dec-93	NT	57	7.0	110	36.0	1.2	35.0
MW-3A	18-Mar-94	474	55	7.2	11.9	38.8	2 U	35.2
MW-3A	14-Jun-94	434	52	7.8	114	36.4	2 U	35.2
MW-3A	18-Jul-17	440	76	5.3	120	42.0	1.5	30.0
MW-4A	9-Jul-93	137	20	15	NT	NT	NT	NT
MW-4A	6-Dec-93	138	42	9.8	38.5	18.4	2 U	20.7
MW-4A	6-Dec-93	NT	45	8.5	41.0	19.0	0.5 U	21.0
MW-4A	17-Mar-94	345	57	7.0	41.3	20.1	2 U	21.6
MW-4A (Dup)	17-Mar-94	146	60	6.8	42.3	20.5	2 U	22.0
MW-4A	14-Jun-94	138	61	5.8	38.3	18.7	2 U	19.1
MW-4A (Dup)	14-Jun-94	137	60	5.8	43.0	21.0	2 U	20.8
MW-4A	14-Jul-17	300	140	1.9	99.0	50.0	0.5 U	34.0
MW-4A (Dup)	14-Jul-17	290	140	2.0	110	53.0	0.5 U	36.0
MW-6A	9-Jul-93	284	4.8	17	52.3	21.9	2 U	45.9
MW-6A	7-Dec-93	269	3.6	11	48.7	20.7	2 U	35.4
MW-6A	7-Dec-93	NT	NT	NT	NT	NT	NT	NT
MW-6A	17-Mar-93	290	3.3	2.8	59.4	26.5	2 U	38.5
MW-6A	14-Jun-94	252	3.9	9.5	44.0	18.6	2 U	30.2
MW-6A	14-Jul-17	91	41	18	27.0	10.0	0.5 U	24.0

NOTES:
mg/L = milligrams per liter; Dup = field duplicate sample; U = not detected at or above the reporting limit;
NT = parameter not sampled or analyzed during the event.

FIGURES

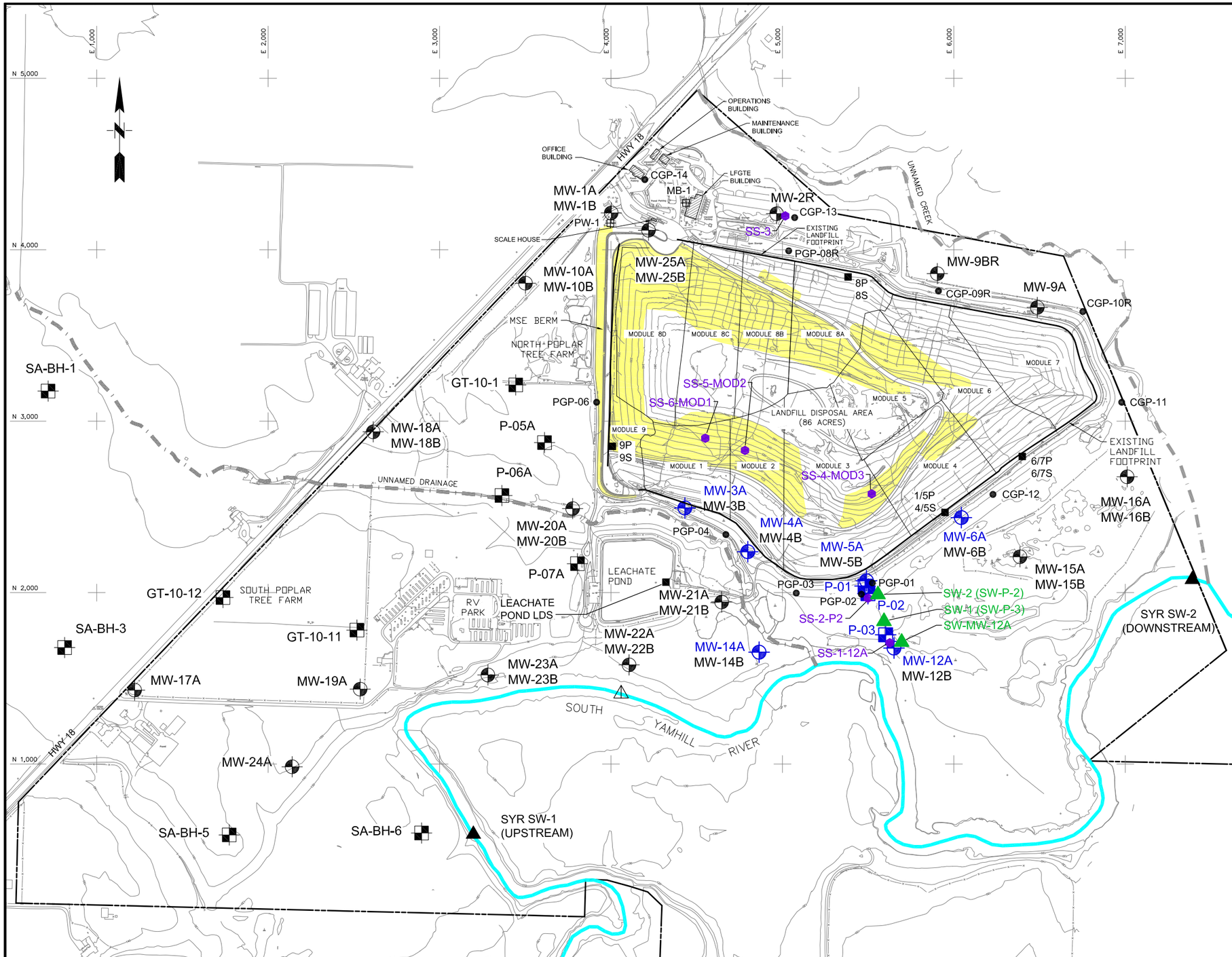

LEGEND:

- Topographic Contours (Surveyed)
- Topographic Contours (USGS)
- Property Boundary
- Flow Line - Yamhill River
- Flow Line - Tributary Stream
- Hydro-seed Areas
- MW-25A — Groundwater Monitoring Well (See note 2 below)
- P-05A — Piezometer (See note 2 below)
- PW-1 — On-Site Water Well
- CGP-11 — Compliance Landfill Gas Monitoring Probe
- PGP-06 — Performance Landfill Gas Monitoring Probe
- 6/7P 6/7S — LCRS and LDS Monitoring Location (See note 3 below)
- SYR SW-1 — South Yamhill River (Surface Water) Sampling Location (Approximate)
- South Yamhill River Gauging Station
- MW-12A — Groundwater Monitoring Well Included in Informal Preliminary Assessment (IPA)
- P-03 — Piezometer Included in IPA
- SW-MW-12A — Surface Water Sample Location Included in IPA (Approximate)
- SS-2-P2 — Soil Sample Location Included in IPA (Approximate)

SOURCE:

1) Existing contours based on aerial topography provided by Miller Creek Aerial Mapping, date of photograph March 19, 2017. Contours are based on NAVD 88.

2) Horizontal Datum: Assumed
Iron pipe at scale house = N4000.000 E4000.000
Iron pipe at maintenance building = N2825.685 E4000.000

NOTES:

1) Monitoring wells and piezometers with "A" designation are screened in the shallow (Silt-Clay) water-bearing zone, and monitoring wells and piezometers with "B" designation are screened in the deeper (Sand-Gravel) water-bearing zone.

2) Piezometers with "GT" and "SA-BH" designations are screened in the shallow (Silt-Clay) water-bearing zone.

3) Leachate Collection and Removal System (LCRS) monitoring locations are identified by a "P" designation for Primary and Leak Detection System (LDS) monitoring locations are identified with a "S" designation for Secondary.

SCS ENGINEERS
Environmental Consultants and Contractors
15940 S.W. 72nd Avenue
Portland, Oregon 97224
(503) 639-9201 FAX: (503) 684-6948

WASTE MANAGEMENT

0 600 1200
SCALE IN FEET

PROJECT NO. 04216038.17	DES BY J.D.
SCALE AS SHOWN	CHK BY D.L.
CAD FILE FIGURE 1	APP BY L.C.

SITE PLAN AND MONITORING LOCATIONS

RIVERBEND LANDFILL
McMINNVILLE, OREGON

DATE OCTOBER 2017

FIGURE 1

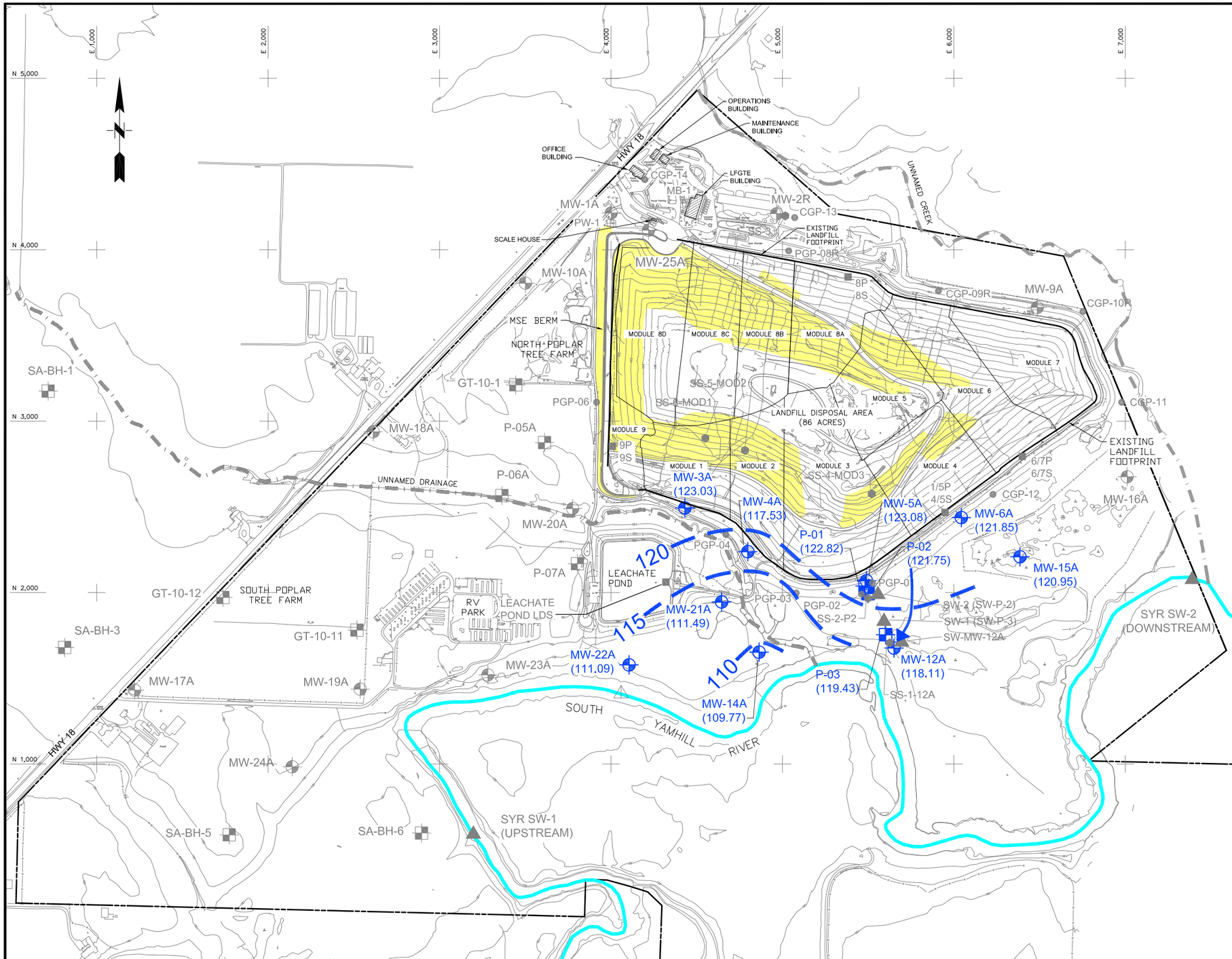

LEGEND:

- Topographic Contours (Surveyed)
- Topographic Contours (USGS)
- Property Boundary
- Flow Line - Yamhill River
- Flow Line - Tributary Stream
- Hydro-seed Areas
- MW-25A — Groundwater Monitoring Well (See note 2 below)
- P-05A — Piezometer (See note 2 below)
- PW-1 — On-Site Water Well
- CGP-11 — Compliance Landfill Gas Monitoring Probe
- PGP-06 — Performance Landfill Gas Monitoring Probe
- 6/7P 6/7S — LCRS and LDS Monitoring Location (See note 3 below)
- SYR SW-1 — South Yamhill River (Surface Water) Sampling Location (Approximate)
- South Yamhill River Gauging Station
- MW-12A — Groundwater Monitoring Well Included in Informal Preliminary Assessment (IPA)
- P-03 — Piezometer Included in IPA
- SW-MW-12A — Surface Water Sample Location Included in IPA (Approximate)
- SS-2-P2 — Soil Sample Location Included in IPA (Approximate)
- 120 — Potentiometric Surface Contours for shallow water - bearing zone (Feet MSL) Contour Interval = 5 Feet
- (120.95) — Groundwater Elevation in Feet Above Mean Sea Level on April 17, 2017
- Inferred Groundwater Flow Direction

SOURCE:

1) Existing contours based on aerial topography provided by Miller Creek Aerial Mapping, date of photograph March 19, 2017. Contours are based on NAVD 88.

2) Horizontal Datum: Assumed
Iron pipe at scale house = N4000.000 E4000.000
Iron pipe at maintenance building = N2825.685 E4000.000

NOTES:

1) Monitoring wells and piezometers with "A" designation are screened in the shallow (Silt-Clay) water-bearing zone, and monitoring wells and piezometers with "B" designation are screened in the deeper (Sand-Gravel) water-bearing zone.

2) Piezometers with "GT" and "SA-BH" designations are screened in the shallow (Silt-Clay) water-bearing zone.

3) Leachate Collection and Removal System (LCRS) monitoring locations are identified by a "P" designation for Primary and Leak Detection System (LDS) monitoring locations are identified with a "S" designation for Secondary.

SCS ENGINEERS
Environmental Consultants and Contractors
15940 S.W. 72nd Avenue
Portland, Oregon 97224
(503) 639-9201 FAX: (503) 684-6948

WASTE MANAGEMENT

0 600 1200
SCALE IN FEET

PROJECT NO.	DES BY
04216038.17	J.D.
SCALE	CHK BY
AS SHOWN	D.L.
CAD FILE	APP BY
FIGURE 2	L.C.

SHALLOW WATER - BEARING ZONE
POTENTIOMETRIC SURFACE CONTOURS
(APRIL 17, 2017)

RIVERBEND LANDFILL
McMINNVILLE, OREGON

DATE: OCTOBER 2017

FIGURE: 2

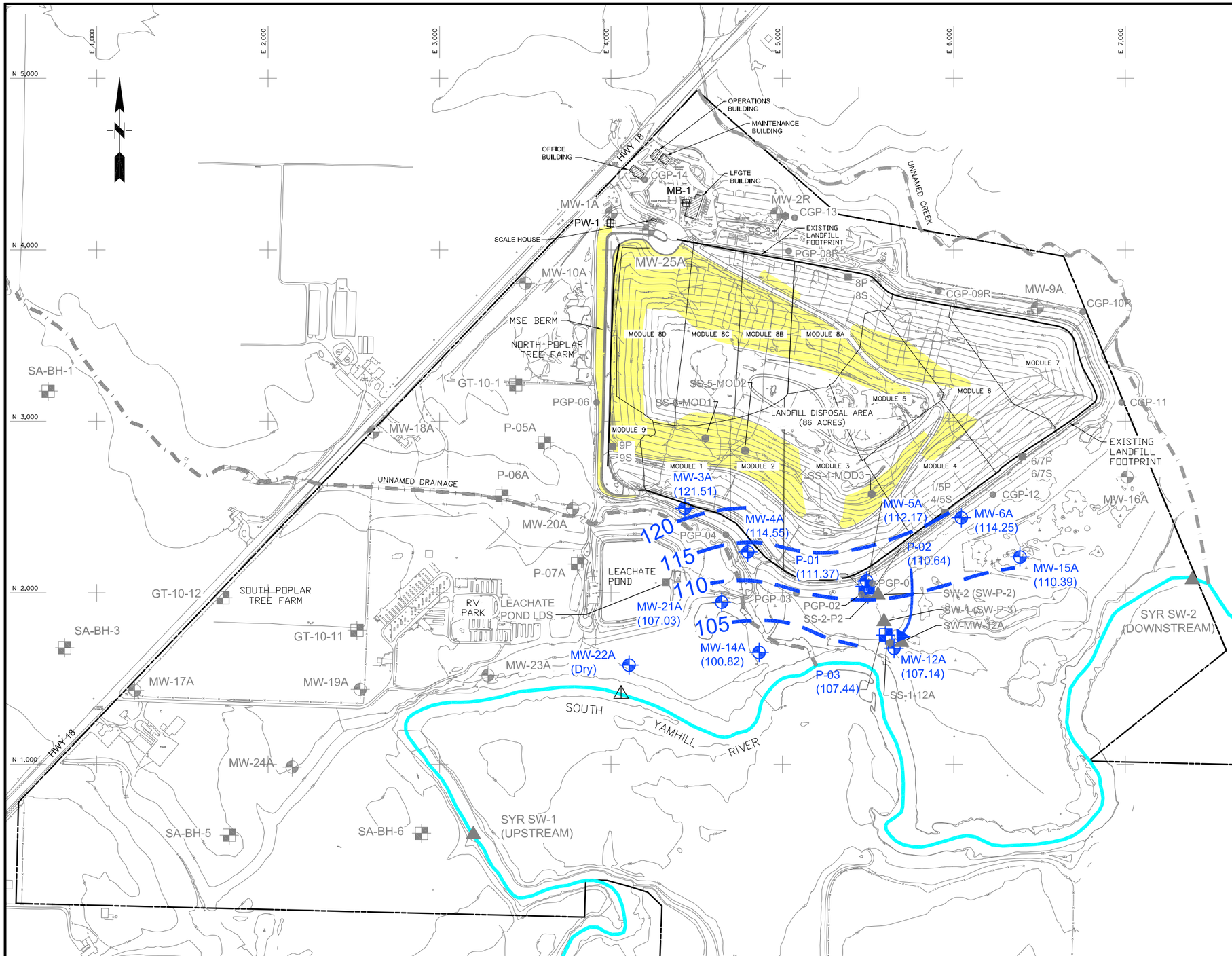

LEGEND:

- Topographic Contours (Surveyed)
- Topographic Contours (USGS)
- Property Boundary
- Flow Line - Yamhill River
- Flow Line - Tributary Stream
- Hydro-seed Areas
- MW-25A — Groundwater Monitoring Well (See note 2 below)
- P-05A — Piezometer (See note 2 below)
- PW-1 — On-Site Water Well
- CGP-11 — Compliance Landfill Gas Monitoring Probe
- PGP-06 — Performance Landfill Gas Monitoring Probe
- 6/7P 6/7S — LCRS and LDS Monitoring Location (See note 3 below)
- SYR SW-1 — South Yamhill River (Surface Water) Sampling Location (Approximate)
- South Yamhill River Gauging Station
- MW-12A — Groundwater Monitoring Well Included in Informal Preliminary Assessment (IPA)
- P-03 — Piezometer Included in IPA
- SW-MW-12A — Surface Water Sample Location Included in IPA (Approximate)
- SS-2-P2 — Soil Sample Location Included in IPA (Approximate)
- 120 — Potentiometric Surface Contours for shallow water - bearing zone (Feet MSL) Contour Interval = 5 Feet
- (110.39) — Groundwater Elevation in Feet Above Mean Sea Level on September 11, 2017
- Inferred Groundwater Flow Direction

SOURCE:

1) Existing contours based on aerial topography provided by Miller Creek Aerial Mapping, date of photograph March 19, 2017. Contours are based on NAVD 88.

2) Horizontal Datum: Assumed
Iron pipe at scale house = N4000.000 E4000.000
Iron pipe at maintenance building = N2825.685 E4000.000

NOTES:

1) Monitoring wells and piezometers with "A" designation are screened in the shallow (Silt-Clay) water-bearing zone, and monitoring wells and piezometers with "B" designation are screened in the deeper (Sand-Gravel) water-bearing zone.

2) Piezometers with "GT" and "SA-BH" designations are screened in the shallow (Silt-Clay) water-bearing zone.

3) Leachate Collection and Removal System (LCRS) monitoring locations are identified by a "P" designation for Primary and Leak Detection System (LDS) monitoring locations are identified with a "S" designation for Secondary.

SCS ENGINEERS
Environmental Consultants and Contractors
15940 S.W. 72nd Avenue
Portland, Oregon 97224
(503) 639-9201 FAX: (503) 684-6948

WASTE MANAGEMENT

0 600 1200
SCALE IN FEET

PROJECT NO. 04216038.17	DES BY J.D.	SHALLOW WATER - BEARING ZONE POTENTIOMETRIC SURFACE CONTOURS (SEPTEMBER 11, 2017) RIVERBEND LANDFILL McMINNVILLE, OREGON	DATE OCTOBER 2017
SCALE AS SHOWN	CHK BY D.L.		FIGURE 3
CAD FILE FIGURE 3	APP BY L.C.		

Figure 4
MW-12A Groundwater Elevation and Specific Conductance Data
Riverbend Landfill

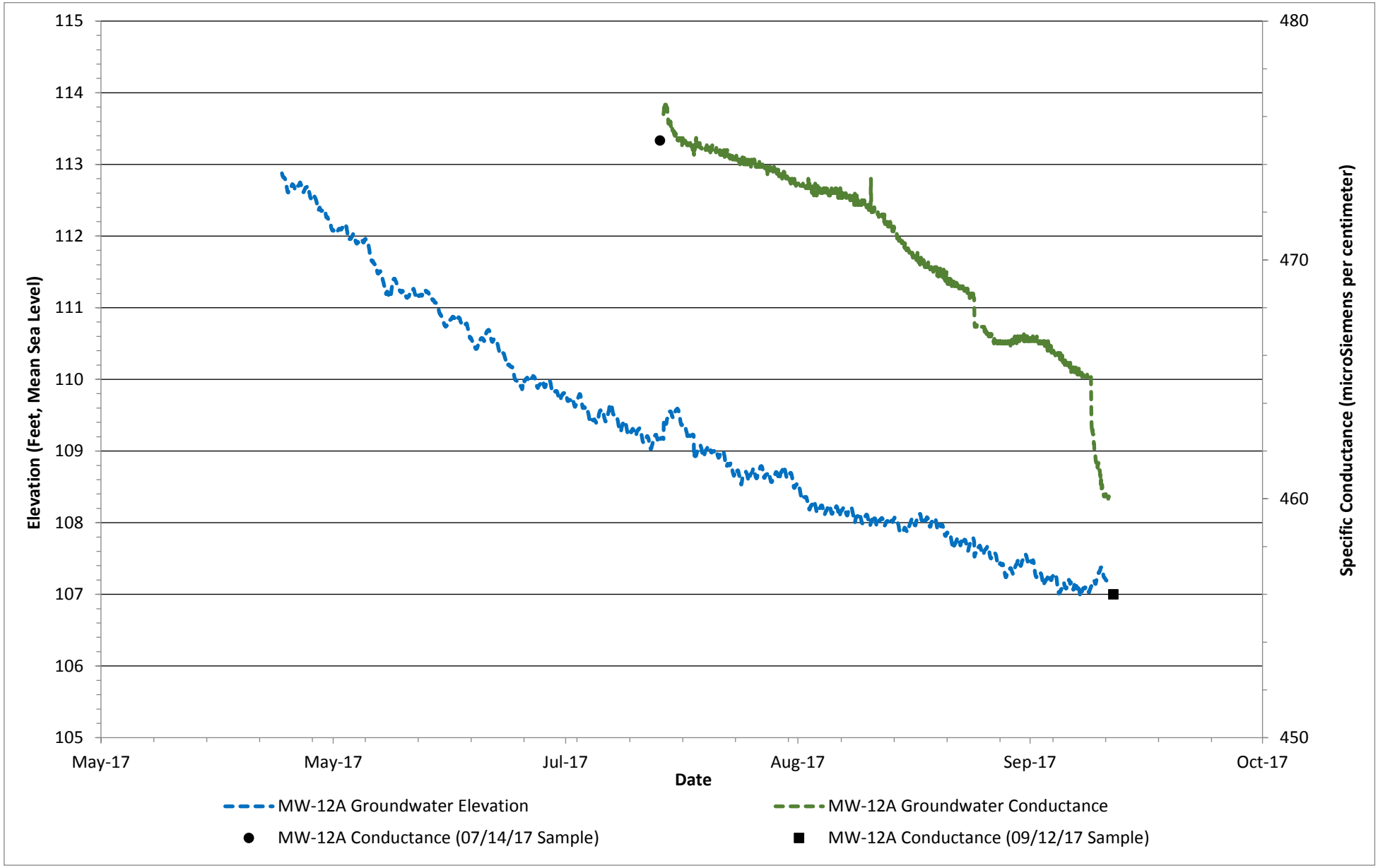

ATTACHMENT 1

Field Documentation

Groundwater Elevation Survey Forms

Riverbend Landfill
Groundwater Elevation Survey

Project #: 04208022.17

Sampler: B McMullen

Quarter: 1 (2) 3 4

Date: 4/17/17

Monitoring Point Designation	Reference Elevation (ft. msl)	DTB (ft. btoc)	DTW (ft. btoc)	Time	Comments
Monitoring Wells					
MW-3A (Shallow)	140.81	37.30	17.78	1402	
MW-4A (Shallow)	142.31	38.81	24.78	1355	
MW-5A (Shallow)	138.73	34.40	15.65	1304	
MW-6A (Shallow)		23.28	7.10	1256	
MW-12A (Shallow)	126.00	27.60	7.89	1319	
MW-14A (Shallow)	121.87	23.60	12.10	1346	
MW-15A (Shallow)	130.07	24.00	9.12	1248	
MW-21A (Shallow)	120.02	15.42	8.53	1348	
MW-22A (Shallow)	125.38	22.50	14.29	1459	
Piezometers					
P-01	125.93	20.00	3.11	1301	
P-02	123.88	18.80	2.13	1308	
P-03		17.20	4.20	1315	

Notes:

Riverbend Landfill
Groundwater Elevation Survey

Project #: 04216038.17 04208022.17

Sampler: T Andrews

Quarter: 1 2 (3) 4

Date: 9/11/17

Monitoring Point Designation	Reference Elevation (ft. msl)	DTB (ft. btoc)	DTW (ft. btoc)	Time	Comments
Monitoring Wells					
MW-3A (Shallow)	140.81	37.30	19.30	1320	
MW-4A (Shallow)	142.31	38.81	27.76	1310	
MW-5A (Shallow)	138.73	34.40	26.56	1220	
MW-6A (Shallow)		23.28	14.04	1145	
MW-12A (Shallow)	126.00	27.60	19.67	1020	
MW-14A (Shallow)	121.87	23.60	21.05	1100	
MW-15A (Shallow)	130.07	24.00	19.68	1155	
MW-21A (Shallow)	120.02	15.42	12.99	1135	
MW-22A (Shallow)	125.38	22.50	Dry	1125	
Piezometers					
P-01	125.93	20.00	14.65	1215	
P-02	123.88	18.80	13.38	1210	
P-03		17.20	16.45	1230	

Notes: 80°F - Sunny NE @ 4mph

Probe decased between locations

Field Sampling Data Sheets

FIELD SAMPLING DATA SHEET

SCS ENGINEERS
15490 SW 72nd Avenue
Portland, OR 97224
Office: 503.639.9201 Fax: 503.684.6948

PROJECT NAME: Riverbend Landfill **WELL ID:** MW-5A
SITE ADDRESS: McMinnville , Oregon **BLIND ID:**
DUP ID: NA

WIND FROM:	N	NE	E	SE	S	SW	W	NW	LIGHT	MEDIUM	HEAVY
WEATHER:	SUNNY		CLOUDY		RAIN		?		**TEMPERATURE:** °F 58 . °C (Circle appropriate units)		

HYDROLOGY/LEVEL MEASUREMENTS (Nearest 0.01 ft)

Date	Time	DT-Bottom	DT-Product	DT-Water	DTP-DTW [Product Thickness]	DTB-DTW [Water Column]		Volume (gal) [Water Column x Gal/ft]
4/18/17	09:06	34.40	.	15.70	.	18.70	X 1	3.04
4/18/17	10:27	.	.	26.63	.		X 3	9.14

Gal/ft = (dia./2)^2 x 0.163	1" = 0.041	2" = 0.163	3" = 0.367	4" = 0.653	6" = 1.469	10" = 4.080	12" = 5.875

§ METHODS: (A) Submersible Pump (B) Peristaltic Pump (C) Disposable Bailer (D) PVC/Teflon Bailer (E) Dedicated Bailer (F) Dedicated Pump (G) Other =

GROUNDWATER SAMPLING DATA (if product is detected, do NOT sample) Sample Depth:

Bottle Type	Date	Time	Method §	Amount	Volume	Preservative	Ice	Filter	pH	√ if used
VOA Glass	4/18/17	10:20	F	3	40 ml	HCl	YES	NO		✓
VOA Glass	4/18/17	10:20	F	3	40 ml	$Na_2S_2O_3$	YES	NO		✓
Amber Glass	/ /	:			250, 500, 1L	H_2SO_4	YES	NO		
White Poly	4/18/17	10:20	F	1	250, 500, 1L	None	YES	NO	NA	✓
Yellow Glass	4/18/17	10:20	F	1	250, 500, 1L	H_2SO_4	YES	NO		✓
Green Poly	/ /	:			250, 500, 1L	NaOH	YES	NO		
Red Total Poly	/ /	:			125, 250, 500	HNO_3	YES	NO		
Red Diss. Poly	4/18/17	10:20	F	1	250, 500, 1L	HNO_3	YES	YES		✓
	/ /	:			250, 500, 1L		YES			

White no acid, Yellow H2SO4, Red HNO3 — Total Bottles (include duplicate count): 9

Analysis Allowed per Bottle Type

BOTTLE TYPE	TYPICAL ANALYSIS ALLOWED PER BOTTLE TYPE (Circle applicable or write non-standard analysis below)
VOA - Glass	(8260) (8011) OR [X] WA [ ]
AMBER - Glass	(8080) (8150) (TOX) OR [ ] WA [ ]
WHITE - Poly	(pH) (Conductivity) (TDS) (TSS) (Alkalinity) (HCO_3/CO_3) (Cl) (SO_4) (Silica, T.) (NO3)
YELLOW - Glass	(COD) (TOC) (NH_3) (NO_3/NO_2) (Tannin/Lignin)
GREEN - Poly	(Cyanide)
RED TOTAL - Poly	(As) (Sb) (Ba) (Be) (Cd) (Co) (Cr) (Cu) (Fe) (Pb) (Mn) (Ni) (Ag) (Se) (Tl) (V) (Zn) (Hardness)
RED DISSOLVED - Poly	(Ca) (Fe) (Mg) (Mn) (K) (Na)

WATER QUALITY DATA Purge Start Time: 09:09 Pump/Bailer Inlet Depth:

Meas.	Method §	Purged (gal)	pH	ORP	E Cond (µS)	°F Temp °C	DTW	Diss O_2 (mg/l)	Water Quality
0	F(0911)	0.00	5.00	-1.5	874	14.08	16.40	4.44	Clear/Colorless
1	F(0931)	3.00	5.22	-23.1	808	14.07	24.81	1.05	clear/Colorless
2	F(0952)	6.00	5.48	-44.5	827	14.19	25.70	1.01	clear/Colorless
3	F(1015)	9.20	5.55	-50.6	847	14.29	26.55	0.86	Clear/Colorless
4	F(1017)	9.45	5.55	-50.8	849	14.30	26.56	0.89	clear/Colorless
5	F(1019)	9.63	5.56	-51.2	850	14.29	26.57	0.87	Clear/Colorless
6			.			.	.	.	

[Casing] [Select A-G] [Cumulative Totals] [Circle units] [Clarity, Color]

Standard purge method ~ 11/9/25psi 150ml/pulse

SAMPLER: R McMullen (PRINTED NAME) (SIGNATURE)

FIELD SAMPLING DATA SHEET

SCS ENGINEERS
15490 SW 72nd Avenue
Portland, OR 97224
Office: 503.639.9201 Fax: 503.684.6948

PROJECT NAME: Riverbend Landfill **WELL ID:** MW-12A
SITE ADDRESS: McMinnville , Oregon **BLIND ID:**
DUP ID: NA

WIND FROM:	N	NE	E	SE	S	SW	W	NW	LIGHT	MEDIUM	HEAVY
WEATHER:	SUNNY		CLOUDY		RAIN		?		**TEMPERATURE:**	°F 55.	°C

[Circle appropriate units]

HYDROLOGY/LEVEL MEASUREMENTS (Nearest 0.01 ft)

Date	Time	DT-Bottom	DT-Product	DT-Water	DTP-DTW [Product Thickness]	DTB-DTW [Water Column]		Volume (gal) [Water Column x Gal/ft]
4/19/17	14:27	27.60	.	8.47	.	19.13	X 1	3.11
4/19/17	15:50	.	.	9.69	.		X 3	9.35

Gal/ft = (dia./2)^2 x 0.163	1" = 0.041	2" = 0.163	3" = 0.367	4" = 0.653	6" = 1.469	10" = 4.080	12" = 5.875

§ METHODS: (A) Submersible Pump (B) Peristaltic Pump (C) Disposable Bailer (D) PVC/Teflon Bailer (E) Dedicated Bailer (F) Dedicated Pump (G) Other =

GROUNDWATER SAMPLING DATA (if product is detected, do NOT sample) Sample Depth:

Bottle Type	Date	Time	Method §	Amount & Volume		Preservative	Ice	Filter	pH	[√ if used] √
VOA Glass	4/19/17	15:45	F	3	40 ml	HCl	YES	NO		✓
VOA Glass	4/19/17	15:45	F	3	40 ml	$Na_2S_2O_3$	YES	NO		✓
Amber Glass	/ /	:			250, 500, 1L	H_2SO_4	YES	NO		
White Poly	4/19/17	15:45	F	1	250, 500, 1L	None	YES	NO	NA	✓
Yellow Glass	4/19/17	15:45	F	1	250, 500, 1L	H_2SO_4	YES	NO		✓
Green Poly	/ /	:			250, 500, 1L	NaOH	YES	NO		
Red Total Poly	/ /	:			125, 250, 500	HNO_3	YES	NO		
Red Diss. Poly	4/19/17	15:45	F	1	250, 500, 1L	HNO_3	YES	YES		✓
	/ /	:			250, 500, 1L		YES			

White no acid, Yellow H2SO4, Red HNO3 — Total Bottles (include duplicate count): 9

Analysis Allowed per Bottle Type

BOTTLE TYPE	TYPICAL ANALYSIS ALLOWED PER BOTTLE TYPE (Circle applicable or write non-standard analysis below)	
VOA - Glass	(8260) (8011)	OR [X] WA [ ]
AMBER - Glass	(8080) (8150) (TOX)	OR [ ] WA [ ]
WHITE - Poly	(pH) (Conductivity) (TDS) (TSS) (Alkalinity) (HCO_3/CO_3) (Cl) (SO_4) (Silica, T.) (NO3)	
YELLOW - Glass	(COD) (TOC) (NH_3) (NO_3/NO_2) (Tannin/Lignin)	
GREEN - Poly	(Cyanide)	
RED TOTAL - Poly	(As) (Sb) (Ba) (Be) (Cd) (Co) (Cr) (Cu) (Fe) (Pb) (Mn) (Ni) (Ag) (Se) (Tl) (V) (Zn) (Hardness)	
RED DISSOLVED - Poly	(Ca) (Fe) (Mg) (Mn) (K) (Na)	

WATER QUALITY DATA Purge Start Time: 14:28 Pump/Bailer Inlet Depth:

Meas.	Method §	Purged (gal)	pH	ORP	E Cond (µS)	°F Temp °C	DTW	Diss O_2 (mg/l)	Water Quality
0	F(1429)	0.00	6.13	82.9	569	9.27	9.20	15.76	clear/colorless
1	F(1450)	3.20	5.96	110.6	579	8.80	9.71	3.24	clear/colorless
2	F(1510)	6.40	5.96	119.3	578	8.84	9.95	2.55	clear/colorless
3	F(1532)	9.35	5.98	129.1	579	8.84	9.69	2.28	clear/colorless
4	F(1534)	9.50	5.98	130.1	579	8.83	9.69	2.30	clear/colorless
5	F(1536)	9.70	5.98	130.5	579	8.83	9.69	2.32	clear/colorless
6			.			.	.	.	

[Casing] [Select A-G] [Cumulative Totals] [Circle units] [Clarity, Color]

Standard purge method ~ 20/10/25psi ~ 250ml/pulse

SAMPLER: B mcmullen
(PRINTED NAME) (SIGNATURE)

FIELD SAMPLING DATA SHEET

SCS ENGINEERS

15490 SW 72nd Avenue
Portland, OR 97224
Office: 503.639.9201 Fax: 503.684.6948

PROJECT NAME: Riverbend Landfill **WELL ID:** Dup1

SITE ADDRESS: McMinnville , Oregon **BLIND ID:**

DUP ID: **NA**

WIND FROM:	N	NE	E	SE	S	SW	W	NW	LIGHT	MEDIUM	HEAVY
WEATHER:	SUNNY	CLOUDY	RAIN	?							

TEMPERATURE: °F 55. °C [Circle appropriate units]

HYDROLOGY/LEVEL MEASUREMENTS (Nearest 0.01 ft)

Date	Time	DT-Bottom	DT-Product	DT-Water	DTP-DTW [Product Thickness]	DTB-DTW [Water Column]		Volume (gal) [Water Column x Gal/ft]
/ /	:	.	.	.	.	.	X 1	.
/ /	:	.	.	.	.		X 3	.

Gal/ft = (dia./2)^2 x 0.163	1" =	0.041	2" =	0.163	3" =	0.367	4" =	0.653	6" =	1.469	10" =	4.080	12" =	5.875

§ METHODS: (A) Submersible Pump (B) Peristaltic Pump (C) Disposable Bailer (D) PVC/Teflon Bailer (E) Dedicated Bailer (F) Dedicated Pump (G) Other =

GROUNDWATER SAMPLING DATA (if product is detected, do NOT sample)

Sample Depth: [√ if used]

Bottle Type	Date	Time	Method §	Amount	Volume	Preservative	Ice	Filter	pH	√
VOA Glass	4/19/17	15:40	F	3	40 ml	HCl	YES	NO		✓
VOA Glass	4/19/17	15:40	F	3	40 ml	$Na_2S_2O_3$	YES	NO		✓
Amber Glass	/ /	:			250, 500, 1L	H_2SO_4	YES	NO		
White Poly	4/19/17	15:40	F	1	250, 500, 1L	None	YES	NO	NA	✓
Yellow Glass	4/19/17	15:40	F	1	250, 500, 1L	H_2SO_4	YES	NO		✓
Green Poly	/ /	:			250, 500, 1L	NaOH	YES	NO		
Red Total Poly	/ /	:			125, 250, 500	HNO_3	YES	NO		
Red Diss. Poly	4/19/17	15:40	F	1	250, 500, 1L	HNO_3	YES	YES		✓
	/ /	:			250, 500, 1L		YES			

White no acid, Yellow H2SO4, Red HNO3 — 9 Total Bottles (include duplicate count):

Analysis Allowed per Bottle Type

BOTTLE TYPE	TYPICAL ANALYSIS ALLOWED PER BOTTLE TYPE (Circle applicable or write non-standard analysis below)
VOA - Glass	(8260) (8011) OR [X] WA [ ]
AMBER - Glass	(8080) (8150) (TOX) OR [ ] WA [ ]
WHITE - Poly	(pH) (Conductivity) (TDS) (TSS) (Alkalinity) (HCO_3/CO_3) (Cl) (SO_4) (Silica, T.) (NO3)
YELLOW - Glass	(COD) (TOC) (NH_3) (NO_3/NO_2) (Tannin/Lignin)
GREEN - Poly	(Cyanide)
RED TOTAL - Poly	(As) (Sb) (Ba) (Be) (Cd) (Co) (Cr) (Cu) (Fe) (Pb) (Mn) (Ni) (Ag) (Se) (Tl) (V) (Zn) (Hardness)
RED DISSOLVED - Poly	(Ca) (Fe) (Mg) (Mn) (K) (Na)

WATER QUALITY DATA

Purge Start Time: : Pump/Bailer Inlet Depth:

Meas.	Method §	Purged (gal)	pH	ORP	E Cond (µS)	°F Temp °C	DTW	Diss O_2 (mg/l)	Water Quality
0	~~F~~ BM	0.00	.			.	.	.	
1		.	.			.	.	.	
2		.	.			.	.	.	
3		.	.			.	.	.	
4		.	.			.	.	.	
5		.	.			.	.	.	
6			.			.	.	.	

[Casing] [Select A-G] [Cumulative Totals] [Circle units] [Clarity, Color]

Collected at MW-12A

SAMPLER: B Mcmullen (PRINTED NAME) (SIGNATURE)

FIELD SAMPLING DATA SHEET

SCS ENGINEERS
15490 SW 72nd Avenue
Portland, OR 97224
Office: 503.639.9201 Fax: 503.684.6948

PROJECT NAME: Riverbend Landfill **WELL ID:** FB2
SITE ADDRESS: McMinnville , Oregon **BLIND ID:**
DUP ID: NA

WIND FROM:	N	NE	E	SE	S	SW	W	NW	LIGHT	MEDIUM	HEAVY
WEATHER:	SUNNY	CLOUDY	RAIN						**TEMPERATURE:**	°F 55 .	°C

[Circle appropriate units]

HYDROLOGY/LEVEL MEASUREMENTS (Nearest 0.01 ft)

Date	Time	DT-Bottom	DT-Product	DT-Water	DTP-DTW [Product Thickness]	DTB-DTW [Water Column]		Volume (gal) [Water Column x Gal/ft]
/ /	:	.	.	.	.	.	X 1	.
/ /	:	.	.	.	.		X 3	.

Gal/ft = (dia./2)^2 x 0.163	1" = 0.041	2" = 0.163	3" = 0.367	4" = 0.653	6" = 1.469	10" = 4.080	12" = 5.875

§ METHODS: (A) Submersible Pump (B) Peristaltic Pump (C) Disposable Bailer (D) PVC/Teflon Bailer (E) Dedicated Bailer (F) Dedicated Pump (G) Other = Transfer

GROUNDWATER SAMPLING DATA (if product is detected, do NOT sample) Sample Depth: [√ if used]

Bottle Type	Date	Time	Method §	Amount & Volume		Preservative	Ice	Filter	pH	√
VOA Glass	4/19/17	14:20	G	3	40 ml	HCl	YES	NO		✓
VOA Glass	4/19/17	14:20	G	3	40 ml	$Na_2S_2O_3$	YES	NO		✓
Amber Glass	/ /	:			250, 500, 1L	H_2SO_4	YES	NO		
White Poly	4/19/17	14:20	G	1	250, 500, 1L	None	YES	NO	NA	✓
Yellow Glass	4/19/17	14:20	G	1	250, 500, 1L	H_2SO_4	YES	NO		✓
Green Poly	/ /	:			250, 500, 1L	NaOH	YES	NO		
Red Total Poly	/ /	:			125, 250, 500	HNO_3	YES	NO		
Red Diss. Poly	4/19/17	14:20	G	1	250, 500, 1L	HNO_3	YES	YES		✓
	/ /	:			250, 500, 1L		YES			

White no acid, Yellow H2SO4, Red HNO3 — 9 Total Bottles (include duplicate count):

Analysis Allowed per Bottle Type

BOTTLE TYPE	TYPICAL ANALYSIS ALLOWED PER BOTTLE TYPE (Circle applicable or write non-standard analysis below)
VOA - Glass	(8260) (8011) OR [X] WA [ ]
AMBER - Glass	(8080) (8150) (TOX) OR [ ] WA [ ]
WHITE - Poly	(pH) (Conductivity) (TDS) (TSS) (Alkalinity) (HCO_3/CO_3) (Cl) (SO_4) (Silica, T.) (NO3)
YELLOW - Glass	(COD) (TOC) (NH_3) (NO_2/NO_3) (Tannin/Lignin)
GREEN - Poly	(Cyanide)
RED TOTAL - Poly	(As) (Sb) (Ba) (Be) (Cd) (Co) (Cr) (Cu) (Fe) (Pb) (Mn) (Ni) (Ag) (Se) (Tl) (V) (Zn) (Hardness)
RED DISSOLVED - Poly	(Ca) (Fe) (Mg) (Mn) (K) (Na)

WATER QUALITY DATA Purge Start Time: : Pump/Bailer Inlet Depth:

Meas.	Method §	Purged (gal)	pH	ORP	E Cond (µS)	°F Temp °C	DTW	Diss O_2 (mg/l)	Water Quality
0		0.00	.			.	.	.	
1		.	.			.	.	.	
2		.	.			.	.	.	
3		.	.			.	.	.	
4		.	.			.	.	.	
5		.	.			.	.	.	
6			.			.	.	.	

[Casing] [Select A-G] [Cumulative Totals] [Circle units] [Clarity, Color]

Collected near MW-12A

SAMPLER: BMcMullen (PRINTED NAME) (SIGNATURE)

FIELD SAMPLING DATA SHEET

SCS ENGINEERS
15490 SW 72nd Avenue
Portland, OR 97224
Office: 503.639.9201 Fax: 503.684.6948

PROJECT NAME: Riverbend Landfill **WELL ID:** MW-14A
SITE ADDRESS: McMinnville , Oregon **BLIND ID:**
DUP ID: NA

WIND FROM:	N	NE	E	SE	S	SW	W	NW	LIGHT	MEDIUM	HEAVY
WEATHER:	SUNNY		CLOUDY		RAIN		?		**TEMPERATURE:** °F 55. °C (Circle appropriate units)		

HYDROLOGY/LEVEL MEASUREMENTS (Nearest 0.01 ft)

Date	Time	DT-Bottom	DT-Product	DT-Water	DTP-DTW [Product Thickness]	DTB-DTW [Water Column]		Volume (gal) [Water Column x Gal/ft]
4/19/17	11:48	23.60	.	12.74	.	10.86	X 1	1.77
4/19/17	12:46	.	.	13.09	.		X 3	5.31

Gal/ft = (dia./2)^2 x 0.163	1" = 0.041	2" = 0.163	3" = 0.367	4" = 0.653	6" = 1.469	10" = 4.080	12" = 5.875

§ METHODS: (A) Submersible Pump (B) Peristaltic Pump (C) Disposable Bailer (D) PVC/Teflon Bailer (E) Dedicated Bailer (F) Dedicated Pump (G) Other =

GROUNDWATER SAMPLING DATA (if product is detected, do NOT sample) Sample Depth: [√ if used]

Bottle Type	Date	Time	Method §	Amount	Volume	Preservative	Ice	Filter	pH	√
VOA Glass	4/19/17	12:40	F	3	40 ml	HC	YES	NO		✓
VOA Glass	4/19/17	12:40	F	3	40 ml	$Na_2S_2O_3$	YES	NO		✓
Amber Glass	/ /	:			250, 500, 1L	H_2SO_4	YES	NO		
White Poly	4/19/17	12:40	F	1	250, 500, 1L	None	YES	NO	NA	✓
Yellow Glass	4/19/17	12:40	F	1	250, 500, 1L	H_2SO_4	YES	NO		✓
Green Poly	/ /	:			250, 500, 1L	NaOH	YES	NO		
Red Total Poly	/ /	:			125, 250, 500	HNO_3	YES	NO		
Red Diss. Poly	4/19/17	12:40	F	1	250, 500, 1L	HNO_3	YES	YES		✓
	/ /	:			250, 500, 1L		YES			

White no acid, Yellow H2SO4, Red HNO3 — 9 Total Bottles (include duplicate count):

Analysis Allowed per Bottle Type

BOTTLE TYPE	TYPICAL ANALYSIS ALLOWED PER BOTTLE TYPE (Circle applicable or write non-standard analysis below)	
VOA - Glass	(8260) (8011)	OR [X] WA [ ]
AMBER - Glass	(8080) (8150) (TOX)	OR [ ] WA [ ]
WHITE - Poly	(pH) (Conductivity) (TDS) (TSS) (Alkalinity) (HCO_3/CO_3) (Cl) (SO_4) (Silica, T.) (NO3)	
YELLOW - Glass	(COD) (TOC) (NH_3) (NO_2/NO_3) (Tannin/Lignin)	
GREEN - Poly	(Cyanide)	
RED TOTAL - Poly	(As) (Sb) (Ba) (Be) (Cd) (Co) (Cr) (Cu) (Fe) (Pb) (Mn) (Ni) (Ag) (Se) (Tl) (V) (Zn) (Hardness)	
RED DISSOLVED - Poly	(Ca) (Fe) (Mg) (Mn) (K) (Na)	

WATER QUALITY DATA Purge Start Time: 11:49 Pump/Bailer Inlet Depth:

Meas. [Casing]	Method § [Select A-G]	Purged (gal) [Cumulative Totals]	pH	ORP	E Cond (µS)	°F Temp °C [Circle units]	DTW	Diss O_2 (mg/l)	Water Quality [Clarity, Color]
0	F(1150)	0.00	5.96	136.6	328	9.96	12.81	12.63	turbid/light tan
1	F(1207)	1.75	5.84	140.0	254	9.59	13.00	3.17	cloudy/light tan
2	F(1220)	3.50	5.87	142.1	249	9.62	13.00	3.05	clear/colorless
3	F(1234)	5.35	5.90	144.1	246	9.70	13.00	2.74	clear/colorless
4	F(1236)	5.50	5.90	144.0	246	9.70	13.00	2.76	clear/colorless
5	F(1238)	5.65	5.89	144.5	246	9.68	13.00	2.79	clear/colorless
6			.			.	.	.	

Standard purge method ~ 20/10/20psi 200ml/pulse

SAMPLER: B Mcmurtrm (PRINTED NAME) (SIGNATURE)

FIELD SAMPLING DATA SHEET

SCS ENGINEERS

15490 SW 72nd Avenue
Portland, OR 97224
Office: 503.639.9201 Fax: 503.684.6948

PROJECT NAME: Riverbend Landfill **WELL ID:** P-1

SITE ADDRESS: McMinnville , Oregon **BLIND ID:**

DUP ID: NA

WIND FROM:	N	NE	E	SE	S	SW	W	NW	LIGHT	MEDIUM	HEAVY

WEATHER:	SUNNY	CLOUDY	RAIN	?	**TEMPERATURE:** °F 60. °C

[Circle appropriate units]

HYDROLOGY/LEVEL MEASUREMENTS (Nearest 0.01 ft)

Date	Time	DT-Bottom	DT-Product	DT-Water	DTP-DTW [Product Thickness]	DTB-DTW [Water Column]		Volume (gal) [Water Column x Gal/ft]
4/18/17	11:13	21.20	.	3.22	.	17.98	X 1	2.93
4/18/17	11:50	.	.	14.09	.		X 3	8.79

Gal/ft = (dia./2)^2 x 0.163	1" = 0.041	2" = 0.163	3" = 0.367	4" = 0.653	6" = 1.469	10" = 4.080	12" = 5.875

§ METHODS: (A) Submersible Pump (B) Peristaltic Pump (C) Disposable Bailer (D) PVC/Teflon Bailer (E) Dedicated Bailer (F) Dedicated Pump (G) Other =

GROUNDWATER SAMPLING DATA (if product is detected, do NOT sample) Sample Depth:

Bottle Type	Date	Time	Method §	Amount & Volume		Preservative	Ice	Filter	pH	√ [√ if used]
VOA Glass	4/18/17	11:45	C	3	40 ml	HCl	YES	NO		✓
VOA Glass	4/18/17	11:45	C	3	40 ml	$Na_2S_2O_3$	YES	NO		✓
Amber Glass	/ /	:			250, 500, 1L	H_2SO_4	YES	NO		
White Poly	4/18/17	11:45	C	1	250, 500, 1L	None	YES	NO	NA	✓
Yellow Glass	4/18/17	11:45	C	1	250, 500, 1L	H_2SO_4	YES	NO		✓
Green Poly	/ /	:			250, 500, 1L	NaOH	YES	NO		
Red Total Poly	/ /	:			125, 250, 500	HNO_3	YES	NO		
Red Diss. Poly	4/18/17	11:45	C	1	250, 500, 1L	HNO_3	YES	YES		✓
	/ /	:			250, 500, 1L		YES			

White no acid, Yellow H2SO4, Red HNO3 — 9 Total Bottles (include duplicate count):

Analysis Allowed per Bottle Type	BOTTLE TYPE	TYPICAL ANALYSIS ALLOWED PER BOTTLE TYPE (Circle applicable or write non-standard analysis below)
	VOA - Glass	(8260) (8011) OR [X] WA [ ]
	AMBER - Glass	(8080) (8150) (TOX) OR [ ] WA [ ]
	WHITE - Poly	(pH) (Conductivity) (TDS) (TSS) (Alkalinity) (HCO_3/CO_3) (Cl) (SO_4) (Silica, T.) (NO3)
	YELLOW - Glass	(COD) (TOC) (NH_3) (NO_3/NO_2) (Tannin/Lignin)
	GREEN - Poly	(Cyanide)
	RED TOTAL - Poly	(As) (Sb) (Ba) (Be) (Cd) (Co) (Cr) (Cu) (Fe) (Pb) (Mn) (Ni) (Ag) (Se) (Tl) (V) (Zn) (Hardness)
	RED DISSOLVED - Poly	(Ca) (Fe) (Mg) (Mn) (K) (Na)

WATER QUALITY DATA Purge Start Time: 11:18 Pump/Bailer Inlet Depth:

Meas. [Casing]	Method § [Select A-G]	Purged (gal) [Cumulative Totals]	pH	ORP	E Cond (µS)	°F Temp °C [Circle units]	DTW	Diss O_2 (mg/l)	Water Quality [Clarity, Color]
0	C(1118)	0.00	6.61	46.6	932	14.11	3.98	12.26	clear/Colorless
1	C(1125)	3.00	5.91	55.0	914	14.33	11.55	7.10	clear/light tan
2	C(1133)	6.00	5.70	59.5	901	14.20	12.74	2.76	clear/light tan
3	C(1139)	8.80	5.80	49.7	931	13.73	13.93	2.25	clear/Colorless
4	C(1141)	8.90	5.82	49.8	930	13.78	13.94	2.15	clear/Colorless
5	C(1143)	9.00	5.84	50.1	932	13.75	13.96	2.10	clear/Colorless
6			.			.	.	.	

Standard purge method using disposable bailers

SAMPLER: B McMurren (PRINTED NAME) (SIGNATURE)

FIELD SAMPLING DATA SHEET

SCS ENGINEERS

15490 SW 72nd Avenue
Portland, OR 97224
Office: 503.639.9201 Fax: 503.684.6948

PROJECT NAME: Riverbend Landfill **WELL ID:** P-2

SITE ADDRESS: McMinnville , Oregon **BLIND ID:**

DUP ID: NA

WIND FROM:	N	NE	E	SE	S	SW	W	NW	LIGHT	MEDIUM	HEAVY
WEATHER:	SUNNY		CLOUDY	RAIN		?			**TEMPERATURE:**	°F 52 .	°C

(Circle appropriate units)

HYDROLOGY/LEVEL MEASUREMENTS (Nearest 0.01 ft)

Date	Time	DT-Bottom	DT-Product	DT-Water	DTP-DTW [Product Thickness]	DTB-DTW [Water Column]		Volume (gal) [Water Column x Gal/ft]
4/20/17	11:28	20.24	.	2.59	.	17.65	X 1	2.87
4/20/17	11:59	.	.	8.59	.		X 3	8.63

Gal/ft = (dia./2)^2 x 0.163	1" = 0.041	2" = 0.163	3" = 0.367	4" = 0.653	6" = 1.469	10" = 4.080	12" = 5.875

§ METHODS: (A) Submersible Pump (B) Peristaltic Pump (C) Disposable Bailer (D) PVC/Teflon Bailer (E) Dedicated Bailer (F) Dedicated Pump (G) Other =

GROUNDWATER SAMPLING DATA (if product is detected, do NOT sample) Sample Depth:

Bottle Type	Date	Time	Method §	Amount & Volume		Preservative	Ice	Filter	pH	[√ if used] √
VOA Glass	4/20/17	11:55	C	3	40 ml	HCl	YES	NO		✓
VOA Glass	4/20/17	11:55	C	3	40 ml	$Na_2S_2O_3$	YES	NO		✓
Amber Glass	/ /	:			250, 500, 1L	H_2SO_4	YES	NO		
White Poly	4/20/17	11:55	C	1	250, 500, 1L	None	YES	NO	NA	✓
Yellow Glass	4/20/17	11:55	C	1	250, 500, 1L	H_2SO_4	YES	NO		✓
Green Poly	/ /	:			250, 500, 1L	NaOH	YES	NO		
Red Total Poly	/ /	:			125, 250, 500	HNO_3	YES	NO		
Red Diss. Poly	4/20/17	11:55	C	1	250, 500, 1L	HNO_3	YES	YES		✓
	/ /	:			250, 500, 1L		YES			

White no acid, Yellow H2SO4, Red HNO3 — 9 Total Bottles (include duplicate count):

Analysis Allowed per Bottle Type

BOTTLE TYPE	TYPICAL ANALYSIS ALLOWED PER BOTTLE TYPE (Circle applicable or write non-standard analysis below)		
VOA - Glass	(8260) (8011)	OR [X]	WA [ ]
AMBER - Glass	(8080) (8150) (TOX)	OR [ ]	WA [ ]
WHITE - Poly	(pH) (Conductivity) (TDS) (TSS) (Alkalinity) (HCO_3/CO_3) (Cl) (SO_4) (Silica, T.) (NO3)		
YELLOW - Glass	(COD) (TOC) (NH_3) (NO_3/NO_2) (Tannin/Lignin)		
GREEN - Poly	(Cyanide)		
RED TOTAL - Poly	(As) (Sb) (Ba) (Be) (Cd) (Co) (Cr) (Cu) (Fe) (Pb) (Mn) (Ni) (Ag) (Se) (Tl) (V) (Zn) (Hardness)		
RED DISSOLVED - Poly	(Ca) (Fe) (Mg) (Mn) (K) (Na)		

WATER QUALITY DATA Purge Start Time: 11 : 32 Pump/Bailer Inlet Depth:

Meas.	Method §	Purged (gal)	pH	ORP	E Cond (µS)	°F Temp (°C)	DTW	Diss O_2 (mg/l)	Water Quality
0	C (1132)	0.00	6.63	179.1	1180	12.37	2.59	10.93	clear/Colorless
1	C (1137)	2.90	6.51	108.7	1210	12.81	8.05	6.95	clear/light tan
2	C (1143)	6.00	6.37	77.0	1219	13.75	8.80	3.94	clear/light tan
3	C (1149)	8.65	6.27	32.1	1231	13.91	9.13	2.74	clear/light tan
4	C (1151)	8.75	6.21	32.4	1231	13.90	9.14	2.61	clear/light tan
5	C (1153)	8.85	6.20	31.8	1232	13.95	9.16	2.55	clear/light tan
6			.			.	.	.	

[Casing] [Select A-G] [Cumulative Totals] [Circle units] [Clarity, Color]

Standard purge method using disposable bailer

SAMPLER: R McMullen (PRINTED NAME) (SIGNATURE)

FIELD SAMPLING DATA SHEET

SCS ENGINEERS
15490 SW 72nd Avenue
Portland, OR 97224
Office: 503.639.9201 Fax: 503.684.6948

PROJECT NAME: Riverbend Landfill **WELL ID:** P-3
SITE ADDRESS: McMinnville , Oregon **BLIND ID:**
DUP ID: NA

WIND FROM:	N	NE	E	SE	S	SW	W	NW	LIGHT	MEDIUM	HEAVY
WEATHER:	SUNNY	CLOUDY	RAIN	?							

TEMPERATURE: °F 57. °C [Circle appropriate units]

HYDROLOGY/LEVEL MEASUREMENTS (Nearest 0.01 ft)

Date	Time	DT-Bottom	DT-Product	DT-Water	DTP-DTW [Product Thickness]	DTB-DTW [Water Column]		Volume (gal) [Water Column x Gal/ft]
4/18/17	12:11	17.02	.	4.45	.	12.57	X 1	2.04
4/18/17	12:47	.	.	4.45	.		X 3	6.14

Gal/ft = (dia./2)^2 x 0.163	1" = 0.041	2" = 0.163	3" = 0.367	4" = 0.653	6" = 1.469	10" = 4.080	12" = 5.875

§ METHODS: (A) Submersible Pump (B) Peristaltic Pump (C) Disposable Bailer (D) PVC/Teflon Bailer (E) Dedicated Bailer (F) Dedicated Pump (G) Other =

GROUNDWATER SAMPLING DATA (if product is detected, do NOT sample) Sample Depth:

Bottle Type	Date	Time	Method §	Amount & Volume		Preservative	Ice	Filter	pH	√ [√ if used]
VOA Glass	4/18/17	12:40	C	3	40 ml	HCl	YES	NO		✓
VOA Glass	4/18/17	12:40	C	3	40 ml	$Na_2S_2O_3$	YES	NO		✓
Amber Glass	/ /	:			250, 500, 1L	H_2SO_4	YES	NO		
White Poly	4/18/17	12:40	C	1	250, 500, 1L	None	YES	NO	NA	✓
Yellow Glass	4/18/17	12:40	C	1	250, 500, 1L	H_2SO_4	YES	NO		✓
Green Poly	/ /	:			250, 500, 1L	NaOH	YES	NO		
Red Total Poly	/ /	:			125, 250, 500	HNO_3	YES	NO		
Red Diss. Poly	4/18/17	12:40	C	1	250, 500, 1L	HNO_3	YES	YES		✓
	/ /	:			250, 500, 1L		YES			

White no acid, Yellow H2SO4, Red HNO3 — 9 Total Bottles (include duplicate count):

Analysis Allowed per Bottle Type	BOTTLE TYPE	TYPICAL ANALYSIS ALLOWED PER BOTTLE TYPE (Circle applicable or write non-standard analysis below)	
	VOA - Glass	(8260) (8011)	OR [X] WA [ ]
	AMBER - Glass	(8080) (8150) (TOX)	OR [ ] WA [ ]
	WHITE - Poly	(pH) (Conductivity) (TDS) (TSS) (Alkalinity) (HCO_3/CO_3) (Cl) (SO_4) (Silica, T.) (NO3)	
	YELLOW - Glass	(COD) (TOC) (NH_3) (NO_3/NO_2) (Tannin/Lignin)	
	GREEN - Poly	(Cyanide)	
	RED TOTAL - Poly	(As) (Sb) (Ba) (Be) (Cd) (Co) (Cr) (Cu) (Fe) (Pb) (Mn) (Ni) (Ag) (Se) (Tl) (V) (Zn) (Hardness)	
	RED DISSOLVED - Poly	(Ca) (Fe) (Mg) (Mn) (K) (Na)	

WATER QUALITY DATA Purge Start Time: 12:14 Pump/Bailer Inlet Depth:

Meas. [Casing]	Method § [Select A-G]	Purged (gal) [Cumulative Totals]	pH	ORP	E Cond (µS)	°F Temp °C [Circle units]	DTW	Diss O_2 (mg/l)	Water Quality [Clarity, Color]
0	C(1214)	0.00	6.19	62.4	813	11.31	4.45	6.40	clear/Colorless
1	C(1219)	2.25	5.52	97.7	876	10.76	4.45	2.15	clear/Colorless
2	C(1229)	4.00	5.81	77.6	861	11.50	4.45	2.73	clear/Colorless
3	C(1235)	6.20	6.05	70.7	836	10.85	4.45	2.93	clear/Colorless
4	C(1237)	6.30	6.08	69.4	832	10.81	4.45	3.13	clear/Colorless
5	C(1239)	6.40	6.10	68.1	831	10.81	4.45	3.19	clear/Colorless
6			.			.	.	.	

Standard purge method using disposable bailer

SAMPLER: R McMullen (PRINTED NAME) (SIGNATURE)

FIELD SAMPLING DATA SHEET

SCS ENGINEERS
15490 SW 72nd Avenue
Portland, OR 97224
Office: 503.639.9201 Fax: 503.684.6948

PROJECT NAME: Riverbend Landfill **WELL ID:** SW-1
SITE ADDRESS: McMinnville , Oregon **BLIND ID:**
DUP ID: NA

WIND FROM:	N	NE	E	SE	S	SW	W	NW	LIGHT	MEDIUM	HEAVY
WEATHER:	SUNNY		CLOUDY		RAIN			?	**TEMPERATURE:**	°F 57.	°C

[Circle appropriate units]

HYDROLOGY/LEVEL MEASUREMENTS (Nearest 0.01 ft)

Date	Time	DT-Bottom	DT-Product	DT-Water	DTP-DTW [Product Thickness]	DTB-DTW [Water Column]		Volume (gal) [Water Column x Gal/ft]
/ /	:	.	.	.	.	.	X 1	.
/ /	:	.	.	.	.		X 3	.

Gal/ft = (dia./2)^2 x 0.163	1" = 0.041	2" = 0.163	3" = 0.367	4" = 0.653	6" = 1.469	10" = 4.080	12" = 5.875

§ METHODS: (A) Submersible Pump (B) Peristaltic Pump (C) Disposable Bailer (D) PVC/Teflon Bailer (E) Dedicated Bailer (F) Dedicated Pump (G) Other = Grab

GROUNDWATER SAMPLING DATA (if product is detected, do NOT sample) Sample Depth:

Bottle Type	Date	Time	Method §	Amount & Volume		Preservative	Ice	Filter	pH	[√ if used] √
VOA Glass	4/18/17	13:40	G	3	40 ml	HCl	YES	NO		✓
VOA Glass	4/18/17	13:40	G	3	40 ml	$Na_2S_2O_3$	YES	NO		✓
Amber Glass	/ /	:			250, 500, 1L	H_2SO_4	YES	NO		
White Poly	4/18/17	13:40	G	1	250, 500, 1L	None	YES	NO	NA	✓
Yellow Glass	4/18/17	13:40	G	1	250, 500, 1L	H_2SO_4	YES	NO		✓
Green Poly	/ /	:			250, 500, 1L	NaOH	YES	NO		
Red Total Poly	/ /	:			125, 250, 500	HNO_3	YES	NO		
Red Diss. Poly	4/18/17	13:40	G	1	250, 500, 1L	HNO_3	YES	YES		✓
	/ /	:			250, 500, 1L		YES			

White no acid, Yellow H2SO4, Red HNO3 — 9 Total Bottles (include duplicate count):

Analysis Allowed per Bottle Type

BOTTLE TYPE	TYPICAL ANALYSIS ALLOWED PER BOTTLE TYPE (Circle applicable or write non-standard analysis below)
VOA - Glass	(8260) (8011) OR [X] WA [ ]
AMBER - Glass	(8080) (8150) (TOX) OR [ ] WA [ ]
WHITE - Poly	(pH) (Conductivity) (TDS) (TSS) (Alkalinity) (HCO_3/CO_3) (Cl) (SO_4) (Silica, T.) (NO3)
YELLOW - Glass	(COD) (TOC) (NH_3) (NO_3/NO_2) (Tannin/Lignin)
GREEN - Poly	(Cyanide)
RED TOTAL - Poly	(As) (Sb) (Ba) (Be) (Cd) (Co) (Cr) (Cu) (Fe) (Pb) (Mn) (Ni) (Ag) (Se) (Tl) (V) (Zn) (Hardness)
RED DISSOLVED - Poly	(Ca) (Fe) (Mg) (Mn) (K) (Na)

WATER QUALITY DATA Purge Start Time: : Pump/Bailer Inlet Depth:

Meas.	Method §	Purged (gal)	pH	ORP	E Cond (µS)	°F Temp °C	DTW	Diss O_2 (mg/l)	Water Quality
0	G(1338)	0.00	6.79	54.1	1252	19.84	—	6.47	clear / olive
1		.	.			.	.	.	
2		.	.			.	.	.	
3		.	.			.	.	.	
4		.	.			.	.	.	
5		.	.			.	.	.	
6			.			.	.	.	

[Casing] [Select A-G] [Cumulative Totals] [Circle units] [Clarity, Color]

Collected grab sample of ponded water ~100' North of P-3

SAMPLER: B McMullen (PRINTED NAME) (SIGNATURE)

FIELD SAMPLING DATA SHEET

SCS ENGINEERS
15490 SW 72nd Avenue
Portland, OR 97224
Office: 503.639.9201 Fax: 503.684.6948

PROJECT NAME: Riverbend Landfill **WELL ID:** SW-2
SITE ADDRESS: McMinnville , Oregon **BLIND ID:**
DUP ID: NA

WIND FROM:	N	NE	E	SE	S	SW	W	NW	LIGHT	MEDIUM	HEAVY
WEATHER:	SUNNY		CLOUDY		RAIN		?		**TEMPERATURE:**	°F 57 .	°C

[Circle appropriate units]

HYDROLOGY/LEVEL MEASUREMENTS (Nearest 0.01 ft)

Date	Time	DT-Bottom	DT-Product	DT-Water	DTP-DTW [Product Thickness]	DTB-DTW [Water Column]		Volume (gal) [Water Column x Gal/ft]
/ /	:	.	.	.	.	.	X 1	.
/ /	:	.	.	.	.		X 3	.

Gal/ft = (dia./2)^2 x 0.163	1" =	0.041	2" =	0.163	3" =	0.367	4" =	0.653	6" =	1.469	10" =	4.080	12" =	5.875

§ METHODS: (A) Submersible Pump (B) Peristaltic Pump (C) Disposable Bailer (D) PVC/Teflon Bailer (E) Dedicated Bailer (F) Dedicated Pump (G) Other = Grab

GROUNDWATER SAMPLING DATA (if product is detected, do NOT sample) Sample Depth:

Bottle Type	Date	Time	Method §	Amount & Volume		Preservative	Ice	Filter	pH	[√ if used]
VOA Glass	4 /18/17	13 :50	G	3	40 ml	HCl	YES	NO		✓
VOA Glass	4 /18/17	13 :50	G	3	40 ml	$Na_2S_2O_3$	YES	NO		✓
Amber Glass	/ /	:			250, 500, 1L	H_2SO_4	YES	NO		
White Poly	4 /18/17	13 :50	G	1	250, 500, 1L	None	YES	NO	NA	✓
Yellow Glass	4 /18/17	13 :50	G	1	250, 500, 1L	H_2SO_4	YES	NO		✓
Green Poly	/ /	:			250, 500, 1L	NaOH	YES	NO		
Red Total Poly	/ /	:			125, 250, 500	HNO_3	YES	NO		
Red Diss. Poly	4 /18/17	13 :50	G	1	250, 500, 1L	HNO_3	YES	YES		✓
	/ /	:			250, 500, 1L		YES			

White no acid, Yellow H2SO4, Red HNO3 — 9 Total Bottles (include duplicate count):

Analysis Allowed per Bottle Type

BOTTLE TYPE	TYPICAL ANALYSIS ALLOWED PER BOTTLE TYPE (Circle applicable or write non-standard analysis below)
VOA - Glass	(8260) (8011) OR [X] WA [ ]
AMBER - Glass	(8080) (8150) (TOX) OR [ ] WA [ ]
WHITE - Poly	(pH) (Conductivity) (TDS) (TSS) (Alkalinity) (HCO_3/CO_3) (Cl) (SO_4) (Silica, T.) (NO3)
YELLOW - Glass	(COD) (TOC) (NH_3) (NO_3/NO_2) (Tannin/Lignin)
GREEN - Poly	(Cyanide)
RED TOTAL - Poly	(As) (Sb) (Ba) (Be) (Cd) (Co) (Cr) (Cu) (Fe) (Pb) (Mn) (Ni) (Ag) (Se) (Tl) (V) (Zn) (Hardness)
RED DISSOLVED - Poly	(Ca) (Fe) (Mg) (Mn) (K) (Na)

WATER QUALITY DATA Purge Start Time: : Pump/Bailer Inlet Depth:

Meas.	Method §	Purged (gal)	pH	ORP	E Cond (µS)	°F Temp °C	DTW	Diss O_2 (mg/l)	Water Quality
0	G(1349)	0.00	7.68	466	1285	20.94	—	14.28	Clear / light tan
1		.	.			.	.	.	
2		.	.			.	.	.	
3		.	.			.	.	.	
4		.	.			.	.	.	
5		.	.			.	.	.	
6			.			.	.	.	

[Casing] [Select A-G] [Cumulative Totals] [Circle units] [Clarity, Color]

Grab Sample Collected from ponded water around P-2

SAMPLER: B McMullen
(PRINTED NAME) (SIGNATURE)

FIELD SAMPLING DATA SHEET

SCS ENGINEERS
15490 SW 72nd Avenue
Portland, OR 97224
Office: 503.639.9201 Fax: 503.684.6948

PROJECT NAME: Riverbend Landfill **WELL ID:** FB1
SITE ADDRESS: McMinnville , Oregon **BLIND ID:**
DUP ID: **NA**

WIND FROM:	N	NE	E	SE	S	SW	W	NW	LIGHT	MEDIUM	HEAVY
WEATHER:	SUNNY		CLOUDY		RAIN		?		**TEMPERATURE:**	°F 60 .	°C

[Circle appropriate units]

HYDROLOGY/LEVEL MEASUREMENTS (Nearest 0.01 ft)

Date	Time	DT-Bottom	DT-Product	DT-Water	DTP-DTW [Product Thickness]	DTB-DTW [Water Column]		Volume (gal) [Water Column x Gal/ft]
/ /	:	.	.	.	.	.	X 1	.
/ /	:	.	.	.	.		X 3	.

Gal/ft = (dia./2)^2 x 0.163	1" =	0.041	2" =	0.163	3" =	0.367	4" =	0.653	6" =	1.469	10" =	4.080	12" =	5.875

§ METHODS: (A) Submersible Pump (B) Peristaltic Pump (C) Disposable Bailer (D) PVC/Teflon Bailer (E) Dedicated Bailer (F) Dedicated Pump (G) Other = Transfer

GROUNDWATER SAMPLING DATA (if product is detected, do NOT sample) Sample Depth:

Bottle Type	Date	Time	Method §	Amount	Volume	Preservative	Ice	Filter	pH	[√ if used]
VOA Glass	4/18/17	14:00	G	3	40 ml	HCl	YES	NO		✓
VOA Glass	4/18/17	14:00	G	3	40 ml	$Na_2S_2O_3$	YES	NO		✓
Amber Glass	/ /	:			250, 500, 1L	H_2SO_4	YES	NO		
White Poly	4/18/17	14:00	G	1	250, 500, 1L	None	YES	NO	NA	✓
Yellow Glass	4/18/17	14:00	G	1	250, 500, 1L	H_2SO_4	YES	NO		✓
Green Poly	/ /	:			250, 500, 1L	NaOH	YES	NO		
Red Total Poly	/ /	:			125, 250, 500	HNO_3	YES	NO		
Red Diss. Poly	4/18/17	14:00	G	1	250, 500, 1L	HNO_3	YES	YES		✓
	/ /	:			250, 500, 1L		YES			

White no acid, Yellow H2SO4, Red HNO3 — 9 Total Bottles (include duplicate count):

Analysis Allowed per Bottle Type

BOTTLE TYPE	TYPICAL ANALYSIS ALLOWED PER BOTTLE TYPE (Circle applicable or write non-standard analysis below)		
VOA - Glass	(8260) (8011)	OR [X]	WA [ ]
AMBER - Glass	(8080) (8150) (TOX)	OR [ ]	WA [ ]
WHITE - Poly	(pH) (Conductivity) (TDS) (TSS) (Alkalinity) (HCO_3/CO_3) (Cl) (SO_4) (Silica, T.) (NO3)		
YELLOW - Glass	(COD) (TOC) (NH_3) (NO_3/NO_2) (Tannin/Lignin)		
GREEN - Poly	(Cyanide)		
RED TOTAL - Poly	(As) (Sb) (Ba) (Be) (Cd) (Co) (Cr) (Cu) (Fe) (Pb) (Mn) (Ni) (Ag) (Se) (Tl) (V) (Zn) (Hardness)		
RED DISSOLVED - Poly	(Ca) (Fe) (Mg) (Mn) (K) (Na)		

WATER QUALITY DATA Purge Start Time: : Pump/Bailer Inlet Depth:

Meas.	Method §	Purged (gal)	pH	ORP	E Cond (µS)	°F Temp °C	DTW	Diss O_2 (mg/l)	Water Quality
0		0.00	.			.	.	.	
1		.	.			.	.	.	
2		.	.			.	.	.	
3		.	.			.	.	.	
4		.	.			.	.	.	
5		.	.			.	.	.	
6			.			.	.	.	

[Casing] [Select A-G] [Cumulative Totals] [Circle units] [Clarity, Color]

Sample collected near SW-2 location

SAMPLER: R McMullen (PRINTED NAME) (SIGNATURE)

FIELD SAMPLING DATA SHEET

SCS ENGINEERS
15490 SW 72nd Avenue
Portland, OR 97224
Office: 503.639.9201 Fax: 503.684.6948

PROJECT NAME: Riverbend Landfill **WELL ID:** 1/5 P
SITE ADDRESS: McMinnville , Oregon **BLIND ID:**
DUP ID: **NA**

WIND FROM:	N	NE	E	SE	S	SW	W	NW	LIGHT	MEDIUM	HEAVY
WEATHER:	SUNNY		CLOUDY	RAIN		?			**TEMPERATURE:** °F (32) . °C		

[Circle appropriate units]

HYDROLOGY/LEVEL MEASUREMENTS (Nearest 0.01 ft)

Date	Time	DT-Bottom	DT-Product	DT-Water	DTP-DTW [Product Thickness]	DTB-DTW [Water Column]		Volume (gal) [Water Column x Gal/ft]
/ /	:	.	.	.	.	.	X 1	.
/ /	:	.	.	.	.		X 3	.

Gal/ft = (dia./2)^2 x 0.163	1" = 0.041	2" = 0.163	3" = 0.367	4" = 0.653	6" = 1.469	10" = 4.080	12" = 5.875

§ METHODS: (A) Submersible Pump (B) Peristaltic Pump (C) Disposable Bailer (D) PVC/Teflon Bailer (E) Dedicated Bailer (F) Dedicated Pump (G) Other =

GROUNDWATER SAMPLING DATA (if product is detected, do NOT sample) Sample Depth: [√ if used]

Bottle Type	Date	Time	Method §	Amount	Volume	Preservative	Ice	Filter	pH	√
VOA Glass	4/18/17	12:00	A	3	40 ml	HCl	YES	NO		✓
VOA Glass	/ /	:			40 ml	$Na_2S_2O_3$	YES	NO		
Amber Glass	/ /	:			250, 500, 1L	H_2SO_4	YES	NO		
White Poly	4/18/17	12:00	A	1	250, 500, 1L	None	YES	NO	NA	✓
Yellow Glass	4/18/17	12:00	A	1	250, 500, 1L	H_2SO_4	YES	NO		✓
Green Poly	/ /	:			250, 500, 1L	NaOH	YES	NO		
Red Total Poly	4/18/17	12:00	A	1	125, 250, 500	HNO_3	YES	NO		✓
Red Diss. Poly	4/18/17	12:00	A	1	250, 500, 1L	HNO_3	YES	YES		✓
	/ /	:			250, 500, 1L		YES			

White no acid, Yellow H2SO4, Red HNO3 Total Bottles (include duplicate count):

Analysis Allowed per Bottle Type

BOTTLE TYPE	TYPICAL ANALYSIS ALLOWED PER BOTTLE TYPE (Circle applicable or write non-standard analysis below)
VOA - Glass	(8260) (8011) OR [✓] WA [ ]
AMBER - Glass	(8080) (8150) (TOX) OR [ ] WA [ ]
WHITE - Poly	(pH) (Conductivity) (TDS) (TSS) (Alkalinity) (HCO_3/CO_3) (Cl) (SO_4) (Silica, T.) (NO3)
YELLOW - Glass	(COD) (TOC) (NH_3) (NO_3/NO_2) (Tannin/Lignin) TKN
GREEN - Poly	(Cyanide)
RED TOTAL - Poly	(As) (Sb) (Ba) (Be) (Cd) (Co) (Cr) (Cu) (Fe) (Pb) (Mn) (Ni) (Ag) (Se) (Tl) (V) (Zn) (Hardness)
RED DISSOLVED - Poly	(Ca) (Fe) (Mg) (Mn) (K) (Na)

WATER QUALITY DATA Purge Start Time: : Pump/Bailer Inlet Depth:

Meas.	Method §	Purged (gal)	pH	ORP	E Cond (µS)	°F Temp °C	DTW	Diss O_2 (mg/l)	Water Quality
0	A(1200)	0.00	7.39	2.0	13,672	30.84	.	0.89	clear/dark olive
1		.	.			.	.	.	
2		.	.			.	.	.	
3		.	.			.	.	.	
4		.	.			.	.	.	
5		.	.			.	.	.	
6		.	.			.	.	.	

[Casing] [Select A-G] [Cumulative Totals] [Circle units] [Clarity, Color]

Liquid Level = 24.5"

SAMPLER: T Andrews (PRINTED NAME) (SIGNATURE)

FIELD SAMPLING DATA SHEET

SCS ENGINEERS
15490 SW 72nd Avenue
Portland, OR 97224
Office: 503.639.9201 Fax: 503.684.6948

PROJECT NAME: Riverbend Landfill **WELL ID:** 4/5S
SITE ADDRESS: McMinnville , Oregon **BLIND ID:**
DUP ID: NA

WIND FROM:	N	NE	E	SE	S	SW	W	NW	LIGHT	MEDIUM	HEAVY
WEATHER:	SUNNY		CLOUDY		RAIN		?		**TEMPERATURE:**	°F 61 .	°C

[Circle appropriate units]

HYDROLOGY/LEVEL MEASUREMENTS (Nearest 0.01 ft)

Date	Time	DT-Bottom	DT-Product	DT-Water	DTP-DTW [Product Thickness]	DTB-DTW [Water Column]		Volume (gal) [Water Column x Gal/ft]
/ /	:	.	.	.	.	.	X 1	.
/ /	:	.	.	.	.		X 3	.

Gal/ft = (dia./2)^2 x 0.163	1" = 0.041	2" = 0.163	3" = 0.367	4" = 0.653	6" = 1.469	10" = 4.080	12" = 5.875

§ METHODS: (A) Submersible Pump (B) Peristaltic Pump (C) Disposable Bailer (D) PVC/Teflon Bailer (E) Dedicated Bailer (F) Dedicated Pump (G) Other =

GROUNDWATER SAMPLING DATA (if product is detected, do NOT sample) Sample Depth: [√ if used]

Bottle Type	Date	Time	Method §	Amount	Volume	Preservative	Ice	Filter	pH	√
VOA Glass	4/18/17	11:45	A	3	40 ml	HCl	YES	NO		✓
VOA Glass	/ /	:			40 ml	$Na_2S_2O_3$	YES	NO		
Amber Glass	/ /	:			250, 500, 1L	H_2SO_4	YES	NO		
White Poly	4/18/17	11:45	A	1	250, 500, 1L	None	YES	NO	NA	✓
Yellow Glass	4/18/17	11:45	A	1	250, 500, 1L	H_2SO_4	YES	NO		✓
Green Poly	/ /	:			250, 500, 1L	NaOH	YES	NO		
Red Total Poly	4/18/17	11:45	A	1	125, 250, 500	HNO_3	YES	NO		✓
Red Diss. Poly	4/18/17	11:45	A	1	250, 500, 1L	HNO_3	YES	YES		✓
	/ /	:			250, 500, 1L		YES			

White no acid, Yellow H2SO4, Red HNO3 Total Bottles (include duplicate count):

Analysis Allowed per Bottle Type

BOTTLE TYPE	TYPICAL ANALYSIS ALLOWED PER BOTTLE TYPE (Circle applicable or write non-standard analysis below)		
VOA - Glass	(8260) (8011)	OR [✓]	WA [ ]
AMBER - Glass	(8080) (8150) (TOX)	OR [ ]	WA [ ]
WHITE - Poly	(pH) (Conductivity) (TDS) (TSS) (Alkalinity) (HCO_3/CO_3) (Cl) (SO_4) (Silica, T.) (NO3)		
YELLOW - Glass	(COD) (TOC) (NH_3) (NO_2/NO_3) (Tannin/Lignin) TKD		
GREEN - Poly	(Cyanide)		
RED TOTAL - Poly	(As) (Sb) (Ba) (Be) (Cd) (Co) (Cr) (Cu) (Fe) (Pb) (Mn) (Ni) (Ag) (Se) (Tl) (V) (Zn) (Hardness)		
RED DISSOLVED - Poly	(Ca) (Fe) (Mg) (Mn) (K) (Na)		

WATER QUALITY DATA Purge Start Time: : Pump/Bailer Inlet Depth:

Meas.	Method §	Purged (gal)	pH	ORP	E Cond (µS)	°F Temp °C	DTW	Diss O_2 (mg/l)	Water Quality
0	A (1145)	0.00	6.56	-14.5	1304	26.93	.	2.96	Clear/colorless
1		.	.			.	.	.	
2		.	.			.	.	.	
3		.	.			.	.	.	
4		.	.			.	.	.	
5		.	.			.	.	.	
6		.	.			.	.	.	

[Casing] [Select A-G] [Cumulative Totals] [Circle units] [Clarity, Color]

Liquid Level = 16.0"

SAMPLER: T Andrews (PRINTED NAME) (SIGNATURE)

FIELD SAMPLING DATA SHEET

SCS ENGINEERS
15490 SW 72nd Avenue
Portland, OR 97224
Office: 503.639.9201 Fax: 503.684.6948

PROJECT NAME: Riverbend Landfill **WELL ID:** 6/7P
SITE ADDRESS: McMinnville , Oregon **BLIND ID:**
DUP ID: **NA**

WIND FROM:	N	NE	E	SE	S	SW	W	NW	LIGHT	MEDIUM	HEAVY
WEATHER:	SUNNY		CLOUDY	RAIN		?			**TEMPERATURE:**	°F 6 .	°C

[Circle appropriate units]

HYDROLOGY/LEVEL MEASUREMENTS (Nearest 0.01 ft)

Date	Time	DT-Bottom	DT-Product	DT-Water	DTP-DTW [Product Thickness]	DTB-DTW [Water Column]		Volume (gal) [Water Column x Gal/ft]
/ /	:	.	.	.	.	.	X 1	.
/ /	:	.	.	.	.		X 3	.

Gal/ft = (dia./2)^2 x 0.163	1" =	0.041	2" =	0.163	3" =	0.367	4" =	0.653	6" =	1.469	10" =	4.080	12" =	5.875

§ METHODS: (A) Submersible Pump (B) Peristaltic Pump (C) Disposable Bailer (D) PVC/Teflon Bailer (E) Dedicated Bailer (F) Dedicated Pump (G) Other =

GROUNDWATER SAMPLING DATA (if product is detected, do NOT sample) Sample Depth:

Bottle Type	Date	Time	Method §	Amount	Volume	Preservative	Ice	Filter	pH	√ if used
VOA Glass	4/18/17	14:00	A	3	40 ml	HCl	YES	NO		✓
VOA Glass	/ /	:			40 ml	$Na_2S_2O_3$	YES	NO		
Amber Glass	/ /	:			250, 500, 1L	H_2SO_4	YES	NO		
White Poly	4/18/17	14:00	A	1	250, 500, 1L	None	YES	NO	NA	✓
Yellow Glass	4/18/17	14:00	A	1	250, 500, 1L	H_2SO_4	YES	NO		✓
Green Poly	/ /	:			250, 500, 1L	NaOH	YES	NO		
Red Total Poly	4/18/17	14:00	A	1	125, 250, 500	HNO_3	YES	NO		✓
Red Diss. Poly	4/18/17	14:00	A	1	250, 500, 1L	HNO_3	YES	YES		✓
	/ /	:			250, 500, 1L		YES			

White no acid, Yellow H2SO4, Red HNO3 Total Bottles (include duplicate count):

Analysis Allowed per Bottle Type

BOTTLE TYPE	TYPICAL ANALYSIS ALLOWED PER BOTTLE TYPE (Circle applicable or write non-standard analysis below)
VOA - Glass	(8260) (8011) OR [ ] WA [ ]
AMBER - Glass	(8080) (8150) (TOX) OR [ ] WA [ ]
WHITE - Poly	(pH) (Conductivity) (TDS) (TSS) (Alkalinity) (HCO_3/CO_3) (Cl) (SO_4) (Silica, T.) (NO3)
YELLOW - Glass	(COD) (TOC) (NH_3) (NO_3/NO_2) (Tannin/Lignin) TKD
GREEN - Poly	(Cyanide)
RED TOTAL - Poly	(As) (Sb) (Ba) (Be) (Cd) (Co) (Cr) (Cu) (Fe) (Pb) (Mn) (Ni) (Ag) (Se) (Tl) (V) (Zn) (Hardness)
RED DISSOLVED - Poly	(Ca) (Fe) (Mg) (Mn) (K) (Na)

WATER QUALITY DATA Purge Start Time: : Pump/Bailer Inlet Depth:

Meas.	Method §	Purged (gal)	pH	ORP	E Cond (µS)	°F Temp °C	DTW	Diss O_2 (mg/l)	Water Quality
0	A(1405)	0.00	7.12	44.0	9443	28.36	.	3.25	Dark Olive
1		.	.			.	.	.	
2		.	.			.	.	.	
3		.	.			.	.	.	
4		.	.			.	.	.	
5		.	.			.	.	.	
6		.	.			.	.	.	

[Casing] [Select A-G] [Cumulative Totals] [Circle units] [Clarity, Color]

Liquid Level 174"

SAMPLER: T Andrews (PRINTED NAME) (SIGNATURE)

FIELD SAMPLING DATA SHEET

SCS ENGINEERS
15490 SW 72nd Avenue
Portland, OR 97224
Office: 503.639.9201 Fax: 503.684.6948

PROJECT NAME: Riverbend Landfill **WELL ID:** 617S
SITE ADDRESS: McMinnville , Oregon **BLIND ID:**
DUP ID: NA

WIND FROM:	N	NE	E	SE	S	SW	W	NW	LIGHT	MEDIUM	HEAVY
WEATHER:	SUNNY	CLOUDY	RAIN	?					**TEMPERATURE:**	°F 61 . °C	

[Circle appropriate units]

HYDROLOGY/LEVEL MEASUREMENTS (Nearest 0.01 ft)

Date	Time	DT-Bottom	DT-Product	DT-Water	DTP-DTW [Product Thickness]	DTB-DTW [Water Column]		Volume (gal) [Water Column x Gal/ft]
/ /	:	.	.	.	.	.	X 1	.
/ /	:	.	.	.	.		X 3	.

Gal/ft = (dia./2)^2 x 0.163	1" = 0.041	2" = 0.163	3" = 0.367	4" = 0.653	6" = 1.469	10" = 4.080	12" = 5.875

§ METHODS: (A) Submersible Pump (B) Peristaltic Pump (C) Disposable Bailer (D) PVC/Teflon Bailer (E) Dedicated Bailer (F) Dedicated Pump (G) Other =

GROUNDWATER SAMPLING DATA (if product is detected, do NOT sample) Sample Depth:

Bottle Type	Date	Time	Method §	Amount	Volume	Preservative	Ice	Filter	pH	[√ if used] √
VOA Glass	4/18/17	13 40	A	3	40 ml	HCl	YES	NO		✓
VOA Glass	/ /	:			40 ml	$Na_2S_2O_3$	YES	NO		
Amber Glass	/ /	:			250, 500, 1L	H_2SO_4	YES	NO		
White Poly	4/18/17	13:40	A	1	250, 500, 1L	None	YES	NO	NA	✓
Yellow Glass	4/18/17	13:40	A	1	250, 500, 1L	H_2SO_4	YES	NO		✓
Green Poly	/ /	:			250, 500, 1L	NaOH	YES	NO		
Red Total Poly	4/18/17	13:40	A	1	125, 250, 500	HNO_3	YES	NO		✓
Red Diss. Poly	4/18/17	13:40	A	1	250, 500, 1L	HNO_3	YES	YES		✓
	/ /	:			250, 500, 1L		YES			

White no acid, Yellow H2SO4, Red HNO3 Total Bottles (include duplicate count):

Analysis Allowed per Bottle Type

BOTTLE TYPE	TYPICAL ANALYSIS ALLOWED PER BOTTLE TYPE (Circle applicable or write non-standard analysis below)		
VOA - Glass	(8260) (8011)	OR [✓]	WA [ ]
AMBER - Glass	(8080) (8150) (TOX)	OR [ ]	WA [ ]
WHITE - Poly	(pH) (Conductivity) (TDS) (TSS) (Alkalinity) (HCO_3/CO_3) (Cl) (SO_4) (Silica, T.) (NO3)		
YELLOW - Glass	(COD) (TOC) (NH_3) (NO_3/NO_2) (Tannin/Lignin) TKN		
GREEN - Poly	(Cyanide)		
RED TOTAL - Poly	(As) (Sb) (Ba) (Be) (Cd) (Co) (Cr) (Cu) (Fe) (Pb) (Mn) (Ni) (Ag) (Se) (Tl) (V) (Zn) (Hardness)		
RED DISSOLVED - Poly	(Ca) (Fe) (Mg) (Mn) (K) (Na)		

WATER QUALITY DATA Purge Start Time: : Pump/Bailer Inlet Depth:

Meas.	Method §	Purged (gal)	pH	ORP	E Cond (µS)	°F Temp °C	DTW	Diss O_2 (mg/l)	Water Quality
0	A(1340)	0.00	6.89	-33	8,630	29.72	.	1.98	Pale Amber
1		.	.			.	.	.	
2		.	.			.	.	.	
3		.	.			.	.	.	
4		.	.			.	.	.	
5		.	.			.	.	.	
6		.	.			.	.	.	

[Casing] [Select A-G] [Cumulative Totals] [Circle units] [Clarity, Color]

Liquid Level 11.4"

SAMPLER: T Andrews (PRINTED NAME) (SIGNATURE)

FIELD SAMPLING DATA SHEET

SCS ENGINEERS
15490 SW 72nd Avenue
Portland, OR 97224
Office: 503.639.9201 Fax: 503.684.6948

PROJECT NAME: Riverbend Landfill **WELL ID:** MW-03A
SITE ADDRESS: McMinnville , Oregon **BLIND ID:**
DUP ID: NA

WIND FROM:	N	NE	E	SE	S	SW	W	NW	LIGHT	MEDIUM	HEAVY
WEATHER:	SUNNY	CLOUDY	RAIN	?					**TEMPERATURE:**	°F 85 .	°C

[Circle appropriate units]

HYDROLOGY/LEVEL MEASUREMENTS (Nearest 0.01 ft)

Date	Time	DT-Bottom	DT-Product	DT-Water	DTP-DTW [Product Thickness]	DTB-DTW [Water Column]		Volume (gal) [Water Column x Gal/ft]
7/14/17	9:30	37.30	—	18.72	—	18.58	X 1	3.03
/ /	:	.	.	.	.		X 3	9.09

Gal/ft = (dia./2)^2 x 0.163	1" = 0.041	2" = 0.163	3" = 0.367	4" = 0.653	6" = 1.469	10" = 4.080	12" = 5.875

§ METHODS: (A) Submersible Pump (B) Peristaltic Pump (C) Disposable Bailer (D) PVC/Teflon Bailer (E) Dedicated Bailer (F) Dedicated Pump (G) Other =

GROUNDWATER SAMPLING DATA (if product is detected, do NOT sample) Sample Depth:

Bottle Type	Date	Time	Method §	Amount	Volume	Preservative	Ice	Filter	pH	[√ if used] √
VOA Glass	7/18/17	10:50	F	3	40 ml	HCl	YES	NO		✓
VOA Glass	/ /	:			40 ml	$Na_2S_2O_3$	YES	NO		
Amber Glass	/ /	:			250, 500, 1L	H_2SO_4	YES	NO		
White Poly	7/18/17	10:50	F	1	250, 500, 1L	None	YES	NO	NA	✓
Yellow Glass	7/18/17	10:50	F	2	250, 500, 1L	H_2SO_4	YES	NO		✓
Green Poly	/ /	:			250, 500, 1L	NaOH	YES	NO		
Red Total Poly	/ /	:			125, 250, 500	HNO_3	YES	NO		
Red Diss. Poly	7/18/17	10:50	F	1	250, 500, 1L	HNO_3	YES	YES		✓
	/ /	:			250, 500, 1L		YES			

White no acid, Yellow H2SO4, Red HNO3 7 Total Bottles (include duplicate count):

Analysis Allowed per Bottle Type

BOTTLE TYPE	TYPICAL ANALYSIS ALLOWED PER BOTTLE TYPE (Circle applicable or write non-standard analysis below)	
VOA - Glass	(8260) (8011)	OR [X] WA [ ]
AMBER - Glass	(8080) (8150) (TOX)	OR [ ] WA [ ]
WHITE - Poly	(pH) (Conductivity) (TDS) (TSS) (Alkalinity) (HCO_3 CO_3) (Cl) (SO_4) (Silica, T.) (NO3)	
YELLOW - Glass	(COD) (TOC) (NH) (NO_3/NO_2) (Tannin/Lignin)	
GREEN - Poly	(Cyanide)	
RED TOTAL - Poly	(As) (Sb) (Ba) (Be) (Cd) (Co) (Cr) (Cu) (Fe) (Pb) (Mn) (Ni) (Ag) (Se) (Tl) (V) (Zn) (Hardness)	
RED DISSOLVED - Poly	(Ca) (Fe) (Mg) (Mn) (K) (Na)	

WATER QUALITY DATA Purge Start Time: 9:33 Pump/Bailer Inlet Depth:

Meas. [Casing]	Method § [Select A-G]	Purged (gal) [Cumulative Totals]	pH	ORP	E Cond (µS)	°F Temp °C [Circle units]	DTW	Diss O_2 (mg/l)	Water Quality [Clarity, Color]
0	F (935)	0.00	6.01	105.8	1065	16.09	19.65	2.25	clear/colorless
1	F (957)	3.05	6.21	63.8	1042	16.61	19.51	1.58	clear/colorless
2	F (1020)	6.10	6.20	63.4	1037	14.91	19.55	0.82	clear/colorless
3	F (1042)	9.10	6.05	70.5	1042	14.75	19.57	0.78	clear/colorless
4	F (1044)	9.30	6.04	71.4	1041	14.75	19.57	0.73	clear/colorless
5	F (1046)	9.50	6.04	71.8	1042	14.76	19.57	0.72	clear/colorless
6			.			.	.	.	

Standard purge method → 250 mL/pulse → 500mL/min (20/10/18)

SAMPLER: T Andrews (PRINTED NAME) (SIGNATURE)

FIELD SAMPLING DATA SHEET

SCS ENGINEERS
15490 SW 72nd Avenue
Portland, OR 97224
Office: 503.639.9201 Fax: 503.684.6948

PROJECT NAME: Riverbend Landfill **WELL ID:** FB1

SITE ADDRESS: McMinnville , Oregon **BLIND ID:**

DUP ID: **NA**

WIND FROM:	N	NE	E	SE	S	SW	W	NW	LIGHT	MEDIUM	HEAVY
WEATHER:	SUNNY	CLOUDY	RAIN	?					**TEMPERATURE:**	°F 85.	°C

[Circle appropriate units]

HYDROLOGY/LEVEL MEASUREMENTS (Nearest 0.01 ft)

Date	Time	DT-Bottom	DT-Product	DT-Water	DTP-DTW [Product Thickness]	DTB-DTW [Water Column]		Volume (gal) [Water Column x Gal/ft]
/ /	:	.	.	.	.	.	X 1	.
/ /	:	.	.	.	.		X 3	.

Gal/ft = (dia./2)^2 x 0.163	1" = 0.041	2" = 0.163	3" = 0.367	4" = 0.653	6" = 1.469	10" = 4.080	12" = 5.875

§ METHODS: (A) Submersible Pump (B) Peristaltic Pump (C) Disposable Bailer (D) PVC/Teflon Bailer (E) Dedicated Bailer (F) Dedicated Pump (G) Other = Transfer

GROUNDWATER SAMPLING DATA (if product is detected, do NOT sample) Sample Depth: [√ if used]

Bottle Type	Date	Time	Method §	Amount & Volume		Preservative	Ice	Filter	pH	√
VOA Glass	7/18/17	9:50	G	3	40 ml	HCl	YES	NO		✓
VOA Glass	/ /	:			40 ml	$Na_2S_2O_3$	YES	NO		
Amber Glass	/ /	:			250, 500, 1L	H_2SO_4	YES	NO		
White Poly	7/18/17	9:50	G	1	250, 500, 1L	None	YES	NO	NA	✓
Yellow Glass	7/18/17	9:50	G	2	250, 500, 1L	H_2SO_4	YES	NO		✓
Green Poly	/ /	:			250, 500, 1L	NaOH	YES	NO		
Red Total Poly	/ /	:			125, 250, 500	HNO_3	YES	NO		
Red Diss. Poly	7/18/17	9:50	G	1	250, 500, 1L	HNO_3	YES	YES		✓
	/ /	:			250, 500, 1L		YES			

White no acid, Yellow H2SO4, Red HNO3 7 Total Bottles (include duplicate count):

Analysis Allowed per Bottle Type

BOTTLE TYPE	TYPICAL ANALYSIS ALLOWED PER BOTTLE TYPE (Circle applicable or write non-standard analysis below)	
VOA - Glass	(8260) (8011)	OR [X] WA [ ]
AMBER - Glass	(8080) (8150) (TOX)	OR [ ] WA [ ]
WHITE - Poly	(pH) (Conductivity) (TDS) (TSS) (Alkalinity) (HCO_3/CO_3) (Cl) (SO_4) (Silica, T.) (NO3)	
YELLOW - Glass	(COD) (TOC) (NH_3) (NO_2/NO_3) (Tannin/Lignin)	
GREEN - Poly	(Cyanide)	
RED TOTAL - Poly	(As) (Sb) (Ba) (Be) (Cd) (Co) (Cr) (Cu) (Fe) (Pb) (Mn) (Ni) (Ag) (Se) (Tl) (V) (Zn) (Hardness)	
RED DISSOLVED - Poly	(Ca) (Fe) (Mg) (Mn) (K) (Na)	

WATER QUALITY DATA Purge Start Time: : Pump/Bailer Inlet Depth:

Meas.	Method §	Purged (gal)	pH	ORP	E Cond (µS)	°F Temp °C	DTW	Diss O_2 (mg/l)	Water Quality
0		0.00	.			.	.	.	
1		.	.			.	.	.	
2		.	.			.	.	.	
3		.	.			.	.	.	
4		.	.			.	.	.	
5		.	.			.	.	.	
6			.			.	.	.	

[Casing] [Select A-G] [Cumulative Totals] [Circle units] [Clarity, Color]

Collected at MW-3A

SAMPLER: T Andrews (PRINTED NAME) (SIGNATURE)

FIELD SAMPLING DATA SHEET

SCS ENGINEERS
15490 SW 72nd Avenue
Portland, OR 97224
Office: 503.639.9201 Fax: 503.684.6948

PROJECT NAME: Riverbend Landfill **WELL ID:** MW-04A
SITE ADDRESS: McMinnville , Oregon **BLIND ID:**
DUP ID: **NA**

WIND FROM:	N	NE	E	SE	S	SW	W	NW	LIGHT	MEDIUM	HEAVY
WEATHER:	SUNNY		CLOUDY		RAIN		?		**TEMPERATURE:**	°F 82 .	°C

[Circle appropriate units]

HYDROLOGY/LEVEL MEASUREMENTS (Nearest 0.01 ft)

Date	Time	DT-Bottom	DT-Product	DT-Water	DTP-DTW [Product Thickness]	DTB-DTW [Water Column]		Volume (gal) [Water Column x Gal/ft]
7/14/17	12:30	38.81	—	27.36	—	11.45	X 1	1.87
/ /	:	.	.	.	.		X 3	5.60

Gal/ft = (dia./2)^2 x 0.163	1" = 0.041	2" = 0.163	3" = 0.367	4" = 0.653	6" = 1.469	10" = 4.080	12" = 5.875

§ METHODS: (A) Submersible Pump (B) Peristaltic Pump (C) Disposable Bailer (D) PVC/Teflon Bailer (E) Dedicated Bailer (F) Dedicated Pump (G) Other =

GROUNDWATER SAMPLING DATA (if product is detected, do NOT sample) Sample Depth:

Bottle Type	Date	Time	Method §	Amount & Volume		Preservative	Ice	Filter	pH	√ [√ if used]
VOA Glass	7/14/17	13:30	F	3	40 ml	HCl	YES	NO		✓
VOA Glass	/ /	:			40 ml	$Na_2S_2O_3$	YES	NO		
Amber Glass	/ /	:			250, 500, 1L	H_2SO_4	YES	NO		
White Poly	7/14/17	13:30	F	1	250, 500, 1L	None	YES	NO	NA	✓
Yellow Glass	7/14/17	13:30	F	2	250, 500, 1L	H_2SO_4	YES	NO		✓
Green Poly	/ /	:			250, 500, 1L	NaOH	YES	NO		
Red Total Poly	/ /	:			125, 250, 500	HNO_3	YES	NO		
Red Diss. Poly	7/14/17	13:30	F	1	250, 500, 1L	HNO_3	YES	YES		✓
	/ /	:			250, 500, 1L		YES			

White no acid, Yellow H2SO4, Red HNO3 — 7 Total Bottles (include duplicate count):

Analysis Allowed per Bottle Type

BOTTLE TYPE	TYPICAL ANALYSIS ALLOWED PER BOTTLE TYPE (Circle applicable or write non-standard analysis below)		
VOA - Glass	(8260) (8011)	OR [X]	WA [ ]
AMBER - Glass	(8080) (8150) (TOX)	OR [ ]	WA [ ]
WHITE - Poly	(pH) (Conductivity) (TDS) (TSS) (Alkalinity) (HCO_3/CO_3) (Cl) (SO_4) (Silica, T.) (NO3)		
YELLOW - Glass	(COD) (TOC) (NH_3) (NO_3/NO_2) (Tannin/Lignin)		
GREEN - Poly	(Cyanide)		
RED TOTAL - Poly	(As) (Sb) (Ba) (Be) (Cd) (Co) (Cr) (Cu) (Fe) (Pb) (Mn) (Ni) (Ag) (Se) (Tl) (V) (Zn) (Hardness)		
RED DISSOLVED - Poly	(Ca) (Fe) (Mg) (Mn) (K) (Na)		

WATER QUALITY DATA Purge Start Time: 12:30 Pump/Bailer Inlet Depth:

Meas. [Casing]	Method § [Select A-G]	Purged (gal) [Cumulative Totals]	pH	ORP	E Cond (µS)	°F Temp °C [Circle units]	DTW	Diss O_2 (mg/l)	Water Quality [Clarity, Color]
0	F (1232)	0.00	6.25	125.1	1030	15.69	29.16	3.68	clear/colorless
1	F (1250)	1.90	5.93	96.4	1012	15.68	29.75	0.96	clear/colorless
2	F (1311)	3.80	5.87	90.9	1021	15.52	30.50	0.67	clear/colorless
3	F (1324)	5.60	5.87	85.6	1022	15.25	31.11	0.58	clear/colorless
4	F (1326)	5.70	5.87	83.2	1022	15.38	STOP	0.55	cloudy/colorless
5	F (1328)	5.80	5.87	83.0	1021	15.38	STOP	0.56	cloudy/colorless
6			.			.	.	.	

Standard Purge Method ~ 20/10/20 → 280mL/pulse → 560mL/min
→ 40/20/20 - 280mL/min

SAMPLER: T Andrews (PRINTED NAME) (SIGNATURE)

FIELD SAMPLING DATA SHEET

SCS ENGINEERS
15490 SW 72nd Avenue
Portland, OR 97224
Office: 503.639.9201 Fax: 503.684.6948

PROJECT NAME: Riverbend Landfill **WELL ID:** DUP1
SITE ADDRESS: McMinnville , Oregon **BLIND ID:**
DUP ID: **NA**

WIND FROM:	N	NE	E	SE	S	SW	W	NW	LIGHT	MEDIUM	HEAVY
WEATHER:	SUNNY		CLOUDY		RAIN		?		**TEMPERATURE:**	°F 80 .	°C

[Circle appropriate units]

HYDROLOGY/LEVEL MEASUREMENTS (Nearest 0.01 ft)

Date	Time	DT-Bottom	DT-Product	DT-Water	DTP-DTW [Product Thickness]	DTB-DTW [Water Column]		Volume (gal) [Water Column x Gal/ft]
/ /	:	.	.	.	.	.	X 1	.
/ /	:	.	.	.	.	.	X 3	.

Gal/ft = (dia./2)^2 x 0.163	1" = 0.041	2" = 0.163	3" = 0.367	4" = 0.653	6" = 1.469	10" = 4.080	12" = 5.875

§ METHODS: (A) Submersible Pump (B) Peristaltic Pump (C) Disposable Bailer (D) PVC/Teflon Bailer (E) Dedicated Bailer (F) Dedicated Pump (G) Other =

GROUNDWATER SAMPLING DATA (if product is detected, do NOT sample) Sample Depth:

Bottle Type	Date	Time	Method §	Amount & Volume		Preservative	Ice	Filter	pH	[√ if used] √
VOA Glass	7/14/17	13:35	F	3	40 ml	HCl	YES	NO		✓
VOA Glass	/ /	:			40 ml	$Na_2S_2O_3$	YES	NO		
Amber Glass	/ /	:			250, 500, 1L	H_2SO_4	YES	NO		
White Poly	7/14/17	13:35	F	1	250, 500, 1L	None	YES	NO	NA	✓
Yellow Glass	7/14/17	13:35	F	2	250, 500, 1L	H_2SO_4	YES	NO		✓
Green Poly	/ /	:			250, 500, 1L	NaOH	YES	NO		
Red Total Poly	/ /	:			125, 250, 500	HNO_3	YES	NO		
Red Diss. Poly	7/14/17	13:35	F	1	250, 500, 1L	HNO_3	YES	YES		✓
	/ /	:			250, 500, 1L		YES			

White no acid, Yellow H2SO4, Red HNO3 7 Total Bottles (include duplicate count):

Analysis Allowed per Bottle Type	BOTTLE TYPE	TYPICAL ANALYSIS ALLOWED PER BOTTLE TYPE (Circle applicable or write non-standard analysis below)	
	VOA - Glass	(8260) (8011)	OR [✓] WA [ ]
	AMBER - Glass	(8080) (8150) (TOX)	OR [ ] WA [ ]
	WHITE - Poly	(pH) (Conductivity) (TDS) (TSS) (Alkalinity) (HCO_3/CO_3) (Cl) (SO_4) (Silica, T.) (NO3)	
	YELLOW - Glass	(COD) (TOC) (NH_3) (NO_3/NO_2) (Tannin/Lignin)	
	GREEN - Poly	(Cyanide)	
	RED TOTAL - Poly	(As) (Sb) (Ba) (Be) (Cd) (Co) (Cr) (Cu) (Fe) (Pb) (Mn) (Ni) (Ag) (Se) (Tl) (V) (Zn) (Hardness)	
	RED DISSOLVED - Poly	(Ca) (Fe) (Mg) (Mn) (K) (Na)	

WATER QUALITY DATA Purge Start Time: : Pump/Bailer Inlet Depth:

Meas.	Method §	Purged (gal)	pH	ORP	E Cond (µS)	°F Temp °C	DTW	Diss O_2 (mg/l)	Water Quality
0		0.00	.			.	.	.	
1		.	.			.	.	.	
2		.	.			.	.	.	
3		.	.			.	.	.	
4		.	.			.	.	.	
5		.	.			.	.	.	
6			.			.	.	.	

[Casing] [Select A-G] [Cumulative Totals] [Circle units] [Clarity, Color]

Collected at MW-4A

SAMPLER: T Andrews (PRINTED NAME) (SIGNATURE)

FIELD SAMPLING DATA SHEET

SCS ENGINEERS
15490 SW 72nd Avenue
Portland, OR 97224
Office: 503.639.9201 Fax: 503.684.6948

PROJECT NAME: Riverbend Landfill **WELL ID:** MW-6A
SITE ADDRESS: McMinnville , Oregon **BLIND ID:**
DUP ID: NA

WIND FROM:	N	NE	E	SE	S	SW	W	NW	LIGHT	MEDIUM	HEAVY
WEATHER:	SUNNY	CLOUDY	RAIN	?	**TEMPERATURE:** °F 78 . °C [Circle appropriate units]						

HYDROLOGY/LEVEL MEASUREMENTS (Nearest 0.01 ft)

Date	Time	DT-Bottom	DT-Product	DT-Water	DTP-DTW [Product Thickness]	DTB-DTW [Water Column]		Volume (gal) [Water Column x Gal/ft]
7/14/17	11:00	23.28	—	9.30	—	13.98	X 1	2.28
/ /	:	.	.	.	.		X 3	6.84

Gal/ft = (dia./2)^2 x 0.163	1" = 0.041	2" = 0.163	3" = 0.367	4" = 0.653	6" = 1.469	10" = 4.080	12" = 5.875

§ METHODS: (A) Submersible Pump (B) Peristaltic Pump (C) Disposable Bailer (D) PVC/Teflon Bailer (E) Dedicated Bailer (F) Dedicated Pump (G) Other =

GROUNDWATER SAMPLING DATA (if product is detected, do NOT sample) Sample Depth:

Bottle Type	Date	Time	Method §	Amount & Volume		Preservative	Ice	Filter	pH	[√ if used] √
VOA Glass	7/14/17	12:10	F	3	40 ml	HCl	YES	NO		✓
VOA Glass	/ /	:			40 ml	$Na_2S_2O_3$	YES	NO		
Amber Glass	/ /	:			250, 500, 1L	H_2SO_4	YES	NO		
White Poly	7/14/17	12:10	F	1	250, 500, 1L	None	YES	NO	NA	✓
Yellow Glass	7/14/17	12:10	F	2	250, 500, 1L	H_2SO_4	YES	NO		✓
Green Poly	/ /	:			250, 500, 1L	NaOH	YES	NO		
Red Total Poly	/ /	:			125, 250, 500	HNO_3	YES	NO		
Red Diss. Poly	7/14/17	12:10	F	1	250, 500, 1L	HNO_3	YES	YES		✓
	/ /	:			250, 500, 1L		YES			

White no acid, Yellow H2SO4, Red HNO3 7 Total Bottles (include duplicate count):

Analysis Allowed per Bottle Type

BOTTLE TYPE	TYPICAL ANALYSIS ALLOWED PER BOTTLE TYPE (Circle applicable or write non-standard analysis below)
VOA - Glass	~~(8260)~~ (8011) OR [X] WA [ ]
AMBER - Glass	(8080) (8150) (TOX) OR [ ] WA [ ]
WHITE - Poly	(pH) (Conductivity) (TDS) (TSS) (Alkalinity) (HCO_3/CO_3) (Cl) (SO_4) (Silica, T.) (NO3)
YELLOW - Glass	(COD) (TOC) (NH_3) (NO_3/NO_2) (Tannin/Lignin)
GREEN - Poly	(Cyanide)
RED TOTAL - Poly	(As) (Sb) (Ba) (Be) (Cd) (Co) (Cr) (Cu) (Fe) (Pb) (Mn) (Ni) (Ag) (Se) (Tl) (V) (Zn) (Hardness)
RED DISSOLVED - Poly	(Ca) (Fe) (Mg) (Mn) (K) (Na)

WATER QUALITY DATA Purge Start Time: 11:03 Pump/Bailer Inlet Depth:

Meas.	Method §	Purged (gal)	pH	ORP	E Cond (µS)	°F Temp °C	DTW	Diss O_2 (mg/l)	Water Quality
0	F (1105)	0.00	6.64	100.6	418	14.33	11.40	5.94	clear/colorless
1	F (1123)	2.30	5.97	70.6	352	14.10	13.15	1.41	tan/cloudy
2	F (1145)	4.60	5.90	69.9	342	13.87	BTOP	1.08	clear/colorless
3	F (1201)	6.85	5.92	68.7	339	13.90	BTOP	1.02	clear/colorless
4	F (1203)	6.95	5.94	68.5	339	13.91	BTOP	1.00	clear/colorless
5	F (1205)	7.05	5.94	68.7	338	13.91	BTOP	1.00	clear/colorless
6			.			.	.	.	

[Casing] [Select A-G] [Cumulative Totals] [Circle units] [Clarity, Color]

Standard Purge Method ~ 20/10/20 → 300 mL/pulse → 600 mL/min
→ 40/20/20 → 300 mL/min

SAMPLER: T Andrews (PRINTED NAME) (SIGNATURE)

FIELD SAMPLING DATA SHEET

SCS ENGINEERS
15490 SW 72nd Avenue
Portland, OR 97224
Office: 503.639.9201 Fax: 503.684.6948

PROJECT NAME: Riverbend Landfill **WELL ID:** MW-12A
SITE ADDRESS: McMinnville , Oregon **BLIND ID:**
DUP ID: **NA**

WIND FROM:	N	NE	E	SE	S	SW	W	NW	LIGHT	MEDIUM	HEAVY
WEATHER:	SUNNY		CLOUDY		RAIN		?		**TEMPERATURE:**	°F 70 .	°C

[Circle appropriate units]

HYDROLOGY/LEVEL MEASUREMENTS (Nearest 0.01 ft)

Date	Time	DT-Bottom	DT-Product	DT-Water	DTP-DTW [Product Thickness]	DTB-DTW [Water Column]		Volume (gal) [Water Column x Gal/ft]
7/14/17	9:15	27.60	—	17.63	.	9.97	X 1	1.63
/ /	:	.	.	.	.		X 3	4.88

Gal/ft = (dia./2)^2 x 0.163	1" = 0.041	2" = 0.163	3" = 0.367	4" = 0.653	6" = 1.469	10" = 4.080	12" = 5.875

§ METHODS: (A) Submersible Pump (B) Peristaltic Pump (C) Disposable Bailer (D) PVC/Teflon Bailer (E) Dedicated Bailer (F) Dedicated Pump (G) Other =

GROUNDWATER SAMPLING DATA (if product is detected, do NOT sample) Sample Depth:

Bottle Type	Date	Time	Method §	Amount & Volume		Preservative	Ice	Filter	pH	[√ if used] √
VOA Glass	7/14/17	10:00	F	3	40 ml	HCl	YES	NO		✓
VOA Glass	/ /	:			40 ml	$Na_2S_2O_3$	YES	NO		
Amber Glass	/ /	:			250, 500, 1L	H_2SO_4	YES	NO		
White Poly	7/14/17	10:00	F	1	250, 500, 1L	None	YES	NO	NA	✓
Yellow Glass	7/14/17	10:00	F	2	250, 500, 1L	H_2SO_4	YES	NO		✓
Green Poly	/ /	:			250, 500, 1L	NaOH	YES	NO		
Red Total Poly	/ /	:			125, 250, 500	HNO_3	YES	NO		
Red Diss. Poly	7/14/17	10:00	F	1	250, 500, 1L	HNO_3	YES	YES		✓
	/ /	:			250, 500, 1L		YES			

White no acid, Yellow H2SO4, Red HNO3 — 7 Total Bottles (include duplicate count):

Analysis Allowed per Bottle Type

BOTTLE TYPE	TYPICAL ANALYSIS ALLOWED PER BOTTLE TYPE (Circle applicable or write non-standard analysis below)
VOA - Glass	(8260) (8011) OR [X] WA [ ]
AMBER - Glass	(8080) (8150) (TOX) OR [ ] WA [ ]
WHITE - Poly	(pH) (Conductivity) (TDS) (TSS) (Alkalinity) (HCO_3/CO_3) (Cl) (SO_4) (Silica, T.) (NO3)
YELLOW - Glass	(COD) (TOC) (NH_3) (NO_3/NO_2) (Tannin/Lignin)
GREEN - Poly	(Cyanide)
RED TOTAL - Poly	(As) (Sb) (Ba) (Be) (Cd) (Co) (Cr) (Cu) (Fe) (Pb) (Mn) (Ni) (Ag) (Se) (Tl) (V) (Zn) (Hardness)
RED DISSOLVED - Poly	(Ca) (Fe) (Mg) (Mn) (K) (Na)

WATER QUALITY DATA Purge Start Time: 9:18 Pump/Bailer Inlet Depth:

Meas. [Casing]	Method § [Select A-G]	Purged (gal) [Cumulative Totals]	pH	ORP	E Cond (µS)	°F Temp °C [Circle units]	DTW	Diss O_2 (mg/l)	Water Quality [Clarity, Color]
0	F(920)	0.00	5.83	102.0	522	12.48	18.99	3.12	clear/colorless
1	F(930)	1.65	6.00	80.2	475	11.85	19.25	1.83	clear/colorless
2	F(942)	3.30	6.14	63.2	477	13.13	20.18	1.78	clear/colorless
3	F(954)	4.90	6.18	62.6	475	13.06	22.26	1.82	clear/colorless
4	F(956)	5.10	6.19	63.7	475	13.01	22.26	1.81	clear/colorless
5	F(958)	5.30	6.20	63.2	475	13.01	22.27	1.80	clear/colorless
6			.			.	.	.	

Standard Purge Method ~20/10/20 ~ 250mL/pulse → 500mL/min

SAMPLER: T Andrews (PRINTED NAME) (SIGNATURE)

FIELD SAMPLING DATA SHEET

SCS ENGINEERS
15490 SW 72nd Avenue
Portland, OR 97224
Office: 503.639.9201 Fax: 503.684.6948

PROJECT NAME: Riverbend Landfill **WELL ID:** MW-5A
SITE ADDRESS: McMinnville , Oregon **BLIND ID:**
DUP ID: NA

WIND FROM:	N	NE	E	SE	S	SW	W	NW	LIGHT	MEDIUM	HEAVY
WEATHER:	SUNNY	CLOUDY	RAIN	?	**TEMPERATURE:**	°F 85. °C (Circle appropriate units)					

HYDROLOGY/LEVEL MEASUREMENTS (Nearest 0.01 ft)

Date	Time	DT-Bottom	DT-Product	DT-Water	DTP-DTW [Product Thickness]	DTB-DTW [Water Column]		Volume (gal) [Water Column x Gal/ft]
9/12/17	12:10	34.40	—	26.63	—	7.77	X 1	1.27
/ /	:	.	.	.	.		X 3	3.80

Gal/ft = (dia./2)^2 x 0.163	1" = 0.041	2" = 0.163	3" = 0.367	4" = 0.653	6" = 1.469	10" = 4.080	12" = 5.875

§ METHODS: (A) Submersible Pump (B) Peristaltic Pump (C) Disposable Bailer (D) PVC/Teflon Bailer (E) Dedicated Bailer (F) Dedicated Pump (G) Other =

GROUNDWATER SAMPLING DATA (if product is detected, do NOT sample) Sample Depth:

Bottle Type	Date	Time	Method §	Amount & Volume		Preservative	Ice	Filter	pH	[√ if used]
VOA Glass	9/12/17	12:50	F	3	40 ml	HCl	YES	NO		✓
VOA Glass	/ /	:			40 ml	$Na_2S_2O_3$	YES	NO		
Amber Glass	/ /	:			250, 500, 1L	H_2SO_4	YES	NO		
White Poly	9/12/17	12:50	F	1	250, 500, 1L	None	YES	NO	NA	✓
Yellow Glass	9/12/17	12:50	F	1	250, 500, 1L	H_2SO_4	YES	NO		✓
Green Poly	/ /	:			250, 500, 1L	NaOH	YES	NO		
Red Total Poly	/ /	:			125, 250, 500	HNO_3	YES	NO		
Red Diss. Poly	9/12/17	12:50	F	1	250, 500, 1L	HNO_3	YES	YES		✓
	/ /	:			250, 500, 1L		YES			

White no acid, Yellow H2SO4, Red HNO3 — 6 Total Bottles (include duplicate count):

Analysis Allowed per Bottle Type

BOTTLE TYPE	TYPICAL ANALYSIS ALLOWED PER BOTTLE TYPE (Circle applicable or write non-standard analysis below)
VOA - Glass	(8260) OR [X] WA [ ]
AMBER - Glass	(8080) (8150) (TOX) OR [ ] WA [ ]
WHITE - Poly	(TDS) (HCO_3/CO_3) (Cl) (SO_4)
YELLOW - Glass	(TOC) (NH_3) (NO_2/NO_3)
GREEN - Poly	(Cyanide)
RED TOTAL - Poly	(As) (Sb) (Ba) (Be) (Cd) (Co) (Cr) (Cu) (Fe) (Pb) (Mn) (Ni) (Ag) (Se) (Tl) (V) (Zn) (Hardness)
RED DISSOLVED - Poly	(Ca) (Mg) (K) (Na)

WATER QUALITY DATA Purge Start Time: 12:11 Pump/Bailer Inlet Depth:

Meas.	Method §	Purged (gal)	pH	ORP	E Cond (µS)	°F Temp °C	DTW	Diss O_2 (mg/l)	Water Quality
0	F (1213)	0.00	6.32	83.3	904	17.34	26.97	4.05	Clear/colorless
1	F (1218)	1.30	5.81	65.5	809	15.53	28.12	1.34	Clear/colorless
2	F (1232)	2.60	5.79	58.7	813	15.91	28.91	0.99	Clear/colorless
3	F (1245)	3.80	5.76	51.0	819	15.93	29.09	0.89	Clear/colorless
4	F (1247)	4.00	5.76	50.5	819	15.95	29.10	0.88	Clear/colorless
5		.	.			.	.	.	
6			.			.	.	.	

[Casing] [Select A-G] [Cumulative Totals] [Circle units] [Clarity, Color]

Standard Purge Method ~ 150mL/pulse → 450mL/min (11/9/25)

SAMPLER: T Andrews (PRINTED NAME) (SIGNATURE)

FIELD SAMPLING DATA SHEET

SCS ENGINEERS
15490 SW 72nd Avenue
Portland, OR 97224
Office: 503.639.9201 Fax: 503.684.6948

PROJECT NAME: Riverbend Landfill **WELL ID:** MW-12A
SITE ADDRESS: McMinnville , Oregon **BLIND ID:**
DUP ID: NA

WIND FROM:	N	NE	E	SE	S	SW	W	NW	LIGHT	MEDIUM	HEAVY
WEATHER:	SUNNY		CLOUDY		RAIN		?		**TEMPERATURE:** °F 70. °C [Circle appropriate units]		

HYDROLOGY/LEVEL MEASUREMENTS (Nearest 0.01 ft)

Date	Time	DT-Bottom	DT-Product	DT-Water	DTP-DTW [Product Thickness]	DTB-DTW [Water Column]		Volume (gal) [Water Column x Gal/ft]
9/12/17	9:30	27.60	—	19.59	—	8.01	X 1	1.31
/ /	:	.	.	.	.		X 3	3.92

Gal/ft = (dia./2)^2 x 0.163	1" = 0.041	2" = 0.163	3" = 0.367	4" = 0.653	6" = 1.469	10" = 4.080	12" = 5.875

§ METHODS: (A) Submersible Pump (B) Peristaltic Pump (C) Disposable Bailer (D) PVC/Teflon Bailer (E) Dedicated Bailer (F) Dedicated Pump (G) Other =

GROUNDWATER SAMPLING DATA (if product is detected, do NOT sample) Sample Depth:

Bottle Type	Date	Time	Method §	Amount	Volume	Preservative	Ice	Filter	pH	[√ if used]
VOA Glass	9/12/17	10:40	F	3	40 ml	HCl	YES	NO		✓
VOA Glass	/ /	:			40 ml	$Na_2S_2O_3$	YES	NO		
Amber Glass	/ /	:			250, 500, 1L	H_2SO_4	YES	NO		
White Poly	9/12/17	10:40	F	1	250, 500, 1L	None	YES	NO	NA	✓
Yellow Glass	9/12/17	10:40	F	1	250, 500, 1L	H_2SO_4	YES	NO		✓
Green Poly	/ /	:			250, 500, 1L	NaOH	YES	NO		
Red Total Poly	/ /	:			125, 250, 500	HNO_3	YES	NO		
Red Diss. Poly	9/12/17	10:40	F	1	250, 500, 1L	HNO_3	YES	YES		✓
	/ /	:			250, 500, 1L		YES			

White no acid, Yellow H2SO4, Red HNO3 Total Bottles (include duplicate count): 6

Analysis Allowed per Bottle Type

BOTTLE TYPE	TYPICAL ANALYSIS ALLOWED PER BOTTLE TYPE (Circle applicable or write non-standard analysis below)		
VOA - Glass	(8260)	OR [X]	WA [ ]
AMBER - Glass	(8080) (8150) (TOX)	OR [ ]	WA [ ]
WHITE - Poly	(TDS) (HCO$_3$/CO$_3$) (Cl) (SO$_4$)		
YELLOW - Glass	(TOC) (NH$_3$) (NO$_3$/NO$_2$)		
GREEN - Poly	(Cyanide)		
RED TOTAL - Poly	(As) (Sb) (Ba) (Be) (Cd) (Co) (Cr) (Cu) (Fe) (Pb) (Mn) (Ni) (Ag) (Se) (Tl) (V) (Zn) (Hardness)		
RED DISSOLVED - Poly	(Ca) (Mg) (K) (Na)		

WATER QUALITY DATA Purge Start Time: 9:57 Pump/Bailer Inlet Depth:

Meas.	Method §	Purged (gal)	pH	ORP	E Cond (µS)	°F Temp °C	DTW	Diss O_2 (mg/l)	Water Quality
0	F(9:58)	0.00	5.80	117.5	655	11.91	19.93	5.90	Clear/colorless
1	F(10:10)	1.35	5.85	86.6	473	10.90	20.94	2.60	Clear/colorless
2	F(10:30)	2.70	5.91	77.1	459	10.91	STOP	2.43	Clear/colorless
3	F(10:32)	3.95	5.92	73.5	456	10.90	STOP	2.40	Clear/colorless
4	F(10:35)	4.10	5.92	73.1	456	10.90	STOP	2.41	Clear/colorless
5		.	.			.	.	.	
6			.			.	.	.	

[Casing] [Select A-G] [Cumulative Totals] [Circle units] [Clarity, Color]

standard Purge Method ~ 20/10/25 → 250 mL/pulse → 500 mL/min

SAMPLER: T Andrews (PRINTED NAME) JM (SIGNATURE)

FIELD SAMPLING DATA SHEET

SCS ENGINEERS
15490 SW 72nd Avenue
Portland, OR 97224
Office: 503.639.9201 Fax: 503.684.6948

PROJECT NAME: Riverbend Landfill **WELL ID:** DUP 1
SITE ADDRESS: McMinnville , Oregon **BLIND ID:**
DUP ID: **NA**

WIND FROM:	N	NE	E	SE	S	SW	W	NW	LIGHT	MEDIUM	HEAVY
WEATHER:	SUNNY	CLOUDY	RAIN	?					**TEMPERATURE:** °F 70 . °C		

[Circle appropriate units]

HYDROLOGY/LEVEL MEASUREMENTS (Nearest 0.01 ft)

Date	Time	DT-Bottom	DT-Product	DT-Water	DTP-DTW [Product Thickness]	DTB-DTW [Water Column]		Volume (gal) [Water Column x Gal/ft]
/ /	:	.	.	.	.	.	X 1	.
/ /	:	.	.	.	.		X 3	.

Gal/ft = (dia./2)^2 x 0.163	1" = 0.041	2" = 0.163	3" = 0.367	4" = 0.653	6" = 1.469	10" = 4.080	12" = 5.875

§ METHODS: (A) Submersible Pump (B) Peristaltic Pump (C) Disposable Bailer (D) PVC/Teflon Bailer (E) Dedicated Bailer (F) Dedicated Pump (G) Other =

GROUNDWATER SAMPLING DATA (if product is detected, do NOT sample) Sample Depth:

Bottle Type	Date	Time	Method §	Amount & Volume		Preservative	Ice	Filter	pH	[√ if used]
VOA Glass	9/12/17	10:45	F	3	40 ml	HCl	YES	NO		✓
VOA Glass	/ /	:			40 ml	$Na_2S_2O_3$	YES	NO		
Amber Glass	/ /	:			250, 500, 1L	H_2SO_4	YES	NO		
White Poly	9/12/17	10:45	F	1	250, 500, 1L	None	YES	NO	NA	✓
Yellow Glass	9/12/17	10:45	F	1	250, 500, 1L	H_2SO_4	YES	NO		✓
Green Poly	/ /	:			250, 500, 1L	NaOH	YES	NO		
Red Total Poly	/ /	:			125, 250, 500	HNO_3	YES	NO		
Red Diss. Poly	9/12/17	10:45	F	1	250, 500, 1L	HNO_3	YES	YES		✓
	/ /	:			250, 500, 1L		YES			

White no acid, Yellow H2SO4, Red HNO3 6 Total Bottles (include duplicate count):

Analysis Allowed per Bottle Type

BOTTLE TYPE	TYPICAL ANALYSIS ALLOWED PER BOTTLE TYPE (Circle applicable or write non-standard analysis below)		
VOA - Glass	(8260)	OR [X]	WA [ ]
AMBER - Glass	(8080) (8150) (TOX)	OR [ ]	WA [ ]
WHITE - Poly	(TDS) (HCO_3/CO_3) (Cl) (SO_4)		
YELLOW - Glass	(TOC) (NH_3) (NO_3/NO_2)		
GREEN - Poly	(Cyanide)		
RED TOTAL - Poly	(As) (Sb) (Ba) (Be) (Cd) (Co) (Cr) (Cu) (Fe) (Pb) (Mn) (Ni) (Ag) (Se) (Tl) (V) (Zn) (Hardness)		
RED DISSOLVED - Poly	(Ca) (Mg) (K) (Na)		

WATER QUALITY DATA Purge Start Time: : Pump/Bailer Inlet Depth:

Meas.	Method §	Purged (gal)	pH	ORP	E Cond (µS)	°F Temp °C	DTW	Diss O_2 (mg/l)	Water Quality
0		0.00	.			.	.	.	
1		.	.			.	.	.	
2		.	.			.	.	.	
3		.	.			.	.	.	
4		.	.			.	.	.	
5		.	.			.	.	.	
6			.			.	.	.	

[Casing] [Select A-G] [Cumulative Totals] [Circle units] [Clarity, Color]

Collected @ MW-12A

SAMPLER: T Andrews (PRINTED NAME) (SIGNATURE)

FIELD SAMPLING DATA SHEET

SCS ENGINEERS
15490 SW 72nd Avenue
Portland, OR 97224
Office: 503.639.9201 Fax: 503.684.6948

PROJECT NAME: Riverbend Landfill **WELL ID:** FR 1
SITE ADDRESS: McMinnville , Oregon **BLIND ID:**
DUP ID: **NA**

WIND FROM:	N	NE	E	SE	S	SW	W	NW	LIGHT	MEDIUM	HEAVY
WEATHER:	SUNNY		CLOUDY		RAIN		?		**TEMPERATURE:** °F 70. °C		

[Circle appropriate units]

HYDROLOGY/LEVEL MEASUREMENTS (Nearest 0.01 ft)

Date	Time	DT-Bottom	DT-Product	DT-Water	DTP-DTW [Product Thickness]	DTB-DTW [Water Column]		Volume (gal) [Water Column x Gal/ft]
/ /	:	.	.	.	.	.	X 1	.
/ /	:	.	.	.	.		X 3	.

Gal/ft = (dia./2)^2 x 0.163	1" = 0.041	2" = 0.163	3" = 0.367	4" = 0.653	6" = 1.469	10" = 4.080	12" = 5.875

§ METHODS: (A) Submersible Pump (B) Peristaltic Pump (C) Disposable Bailer (D) PVC/Teflon Bailer (E) Dedicated Bailer (F) Dedicated Pump (G) Other =

GROUNDWATER SAMPLING DATA (if product is detected, do NOT sample) Sample Depth:

Bottle Type	Date	Time	Method §	Amount & Volume		Preservative	Ice	Filter	pH	[√ if used] √
VOA Glass	9/12/17	11:00	G	3	40 ml	HCl	YES	NO		✓
VOA Glass	/ /	:			40 ml	$Na_2S_2O_3$	YES	NO		
Amber Glass	/ /	:			250, 500, 1L	H_2SO_4	YES	NO		
White Poly	9/12/17	11:00	G	1	250, 500, 1L	None	YES	NO	NA	✓
Yellow Glass	9/12/17	11:00	G	1	250, 500, 1L	H_2SO_4	YES	NO		✓
Green Poly	/ /	:			250, 500, 1L	NaOH	YES	NO		
Red Total Poly	/ /	:			125, 250, 500	HNO_3	YES	NO		
Red Diss. Poly	9/12/17	11:00	G	1	250, 500, 1L	HNO_3	YES	YES		✓
	/ /	:			250, 500, 1L		YES			

White no acid, Yellow H2SO4, Red HNO3 — 6 Total Bottles (include duplicate count):

Analysis Allowed per Bottle Type

BOTTLE TYPE	TYPICAL ANALYSIS ALLOWED PER BOTTLE TYPE (Circle applicable or write non-standard analysis below)		
VOA - Glass	(8260)	OR [✓]	WA [ ]
AMBER - Glass	(8080) (8150) (TOX)	OR [ ]	WA [ ]
WHITE - Poly	(TDS) (HCO$_3$/CO$_3$) (Cl) (SO$_4$)		
YELLOW - Glass	(TOC) (NH$_3$) (NO$_3$/NO$_2$)		
GREEN - Poly	(Cyanide)		
RED TOTAL - Poly	(As) (Sb) (Ba) (Be) (Cd) (Co) (Cr) (Cu) (Fe) (Pb) (Mn) (Ni) (Ag) (Se) (Tl) (V) (Zn) (Hardness)		
RED DISSOLVED - Poly	(Ca) (Mg) (K) (Na)		

WATER QUALITY DATA Purge Start Time: : Pump/Bailer Inlet Depth:

Meas.	Method §	Purged (gal)	pH	ORP	E Cond (µS)	°F Temp °C	DTW	Diss O_2 (mg/l)	Water Quality
0		0.00	.			.	.	.	
1		.	.			.	.	.	
2		.	.			.	.	.	
3		.	.			.	.	.	
4		.	.			.	.	.	
5		.	.			.	.	.	
6			.			.	.	.	

[Casing] [Select A-G] [Cumulative Totals] [Circle units] [Clarity, Color]

Collected near MW-12A

SAMPLER: T Andrews (PRINTED NAME) (SIGNATURE)

FIELD SAMPLING DATA SHEET

SCS ENGINEERS
15490 SW 72nd Avenue
Portland, OR 97224
Office: 503.639.9201 Fax: 503.684.6948

PROJECT NAME: Riverbend Landfill **WELL ID:** MW-14A
SITE ADDRESS: McMinnville , Oregon **BLIND ID:**
DUP ID: **NA**

WIND FROM:	N	NE	E	SE	S	SW	W	NW	LIGHT	MEDIUM	HEAVY
WEATHER:	SUNNY		CLOUDY		RAIN		?		**TEMPERATURE:**	° F .	° C

[Circle appropriate units]

HYDROLOGY/LEVEL MEASUREMENTS (Nearest 0.01 ft)

Date	Time	DT-Bottom	DT-Product	DT-Water	DTP-DTW [Product Thickness]	DTB-DTW [Water Column]		Volume (gal) [Water Column x Gal/ft]
9/11/17	11:10	23.60	—	21.05	—	2.55	X 1	0.42
/ /	:	.	.	.	.		X 3	1.25

Gal/ft = (dia./2)^2 x 0.163	1" = 0.041	2" = 0.163	3" = 0.367	4" = 0.653	6" = 1.469	10" = 4.080	12" = 5.875

§ METHODS: (A) Submersible Pump (B) Peristaltic Pump (C) Disposable Bailer (D) PVC/Teflon Bailer (E) Dedicated Bailer (F) Dedicated Pump (G) Other =

GROUNDWATER SAMPLING DATA (if product is detected, do NOT sample) Sample Depth: [√ if used]

Bottle Type	Date	Time	Method §	Amount & Volume	Preservative	Ice	Filter	pH	√
VOA Glass	/ /	:		40 ml	HCl	YES	NO		
VOA Glass	/ /	:		40 ml	$Na_2S_2O_3$	YES	NO		
Amber Glass	/ /	:		250, 500, 1L	H_2SO_4	YES	NO		
White Poly	/ /	:		250, 500, 1L	None	YES	NO	NA	
Yellow Glass	/ /	:		250, 500, 1L	H_2SO_4	YES	NO		
Green Poly	/ /	:		250, 500, 1L	NaOH	YES	NO		
Red Total Poly	/ /	:		125, 250, 500	HNO_3	YES	NO		
Red Diss. Poly	/ /	:		250, 500, 1L	HNO_3	YES	YES		
	/ /	:		250, 500, 1L		YES			

White no acid, Yellow H2SO4, Red HNO3 Total Bottles (include duplicate count):

Analysis Allowed per Bottle Type

BOTTLE TYPE	TYPICAL ANALYSIS ALLOWED PER BOTTLE TYPE (Circle applicable or write non-standard analysis below)
VOA - Glass	(8260) OR [ ] WA [ ]
AMBER - Glass	(8080) (8150) (TOX) OR [ ] WA [ ]
WHITE - Poly	(TDS) (HCO_3/CO_3) (Cl) (SO_4)
YELLOW - Glass	(TOC) (NH_3) (NO_3/NO_2)
GREEN - Poly	(Cyanide)
RED TOTAL - Poly	(As) (Sb) (Ba) (Be) (Cd) (Co) (Cr) (Cu) (Fe) (Pb) (Mn) (Ni) (Ag) (Se) (Tl) (V) (Zn) (Hardness)
RED DISSOLVED - Poly	(Ca) (Mg) (K) (Na)

WATER QUALITY DATA Purge Start Time: — : Pump/Bailer Inlet Depth:

Meas.	Method §	Purged (gal)	pH	ORP	E Cond (µS)	°F Temp °C	DTW	Diss O_2 (mg/l)	Water Quality
0		0.00	.			.	.	.	
1		.	.			.	.	.	
2		.				.	.	.	
3		.	.			.	.	.	
4		.	.			.	.	.	
5		.	.			.	.	.	
6			.			.	.	.	

[Casing] [Select A-G] [Cumulative Totals] [Circle units] [Clarity, Color]

No Sample collected. Not enough water to sample

SAMPLER: T Andrews (PRINTED NAME) (SIGNATURE)

FIELD SAMPLING DATA SHEET

SCS ENGINEERS
15490 SW 72nd Avenue
Portland, OR 97224
Office: 503.639.9201 Fax: 503.684.6948

PROJECT NAME: Riverbend Landfill **WELL ID:** P-01
SITE ADDRESS: McMinnville , Oregon **BLIND ID:**
DUP ID: NA

WIND FROM:	N	NE	E	SE	S	SW	W	NW	LIGHT	MEDIUM	HEAVY
WEATHER:	SUNNY		CLOUDY		RAIN		?		**TEMPERATURE:** °F 96 . °C (Circle appropriate units)		

HYDROLOGY/LEVEL MEASUREMENTS (Nearest 0.01 ft)

Date	Time	DT-Bottom	DT-Product	DT-Water	DTP-DTW [Product Thickness]	DTB-DTW [Water Column]		Volume (gal) [Water Column x Gal/ft]
9/11/17	13:30	21.20	—	14.65	—	6.55	X 1	1.07
9/12/17	13:35	.	.	15.01	.		X 3	3.20

Gal/ft = (dia./2)^2 x 0.163	1" = 0.041	2" = 0.163	3" = 0.367	4" = 0.653	6" = 1.469	10" = 4.080	12" = 5.875

§ METHODS: (A) Submersible Pump (B) Peristaltic Pump (C) Disposable Bailer (D) PVC/Teflon Bailer (E) Dedicated Bailer (F) Dedicated Pump (G) Other =

GROUNDWATER SAMPLING DATA (if product is detected, do NOT sample) Sample Depth:

Bottle Type	Date	Time	Method §	Amount & Volume		Preservative	Ice	Filter	pH	[√ if used]
VOA Glass	9/12/17	13:45	C	3	40 ml	HCl	YES	NO		✓
VOA Glass	/ /	:			40 ml	$Na_2S_2O_3$	YES	NO		
Amber Glass	/ /	:			250, 500, 1L	H_2SO_4	YES	NO		
White Poly	9/12/17	13:45	C	1	250, 500, 1L	None	YES	NO	NA	✓
Yellow Glass	9/12/17	13:45	C	1	250, 500, 1L	H_2SO_4	YES	NO		✓
Green Poly	/ /	:			250, 500, 1L	NaOH	YES	NO		
Red Total Poly	/ /	:			125, 250, 500	HNO_3	YES	NO		
Red Diss. Poly	9/12/17	13:45	C	1	250, 500, 1L	HNO_3	YES	YES		✓
	/ /	:			250, 500, 1L		YES			

White no acid, Yellow H2SO4, Red HNO3 — 6 Total Bottles (include duplicate count):

Analysis Allowed per Bottle Type

BOTTLE TYPE	TYPICAL ANALYSIS ALLOWED PER BOTTLE TYPE (Circle applicable or write non-standard analysis below)
VOA - Glass	(8260) OR [✓] WA [ ]
AMBER - Glass	(8080) (8150) (TOX) OR [ ] WA [ ]
WHITE - Poly	(TDS) (HCO_3/CO_3) (Cl) (SO_4)
YELLOW - Glass	(TOC) (NH_3) (NO_2/NO_3)
GREEN - Poly	(Cyanide)
RED TOTAL - Poly	(As) (Sb) (Ba) (Be) (Cd) (Co) (Cr) (Cu) (Fe) (Pb) (Mn) (Ni) (Ag) (Se) (Tl) (V) (Zn) (Hardness)
RED DISSOLVED - Poly	(Ca) (Mg) (K) (Na)

WATER QUALITY DATA Purge Start Time: 13:32 Pump/Bailer Inlet Depth:

Meas. [Casing]	Method § [Select A-G]	Purged (gal) [Cumulative Totals]	pH	ORP	E Cond (µS)	°F Temp (°C) [Circle units]	DTW	Diss O_2 (mg/l)	Water Quality [Clarity, Color]
0	C (1355)	0.00	5.96	64.6	839	17.04	15.10	3.34	Clear/colorless
1	C (1338)	1.10	5.96	60.4	866	14.97	16.09	3.11	Clear/colorless
2	C (1345)	2.20	5.92	53.7	888	14.97	17.25	1.87	Cloudy/colorless
3	C (1400)	3.20	5.91	50.1	892	14.53	18.43	1.62	Cloudy/colorless
4	C (1405)	3.40	5.92	51.6	893	14.49	18.90	1.65	Cloudy/colorless
5	C (1407)	3.60	5.92	52.8	893	14.50	19.39	1.71	Cloudy/colorless
6			.			.	.	.	

Standard Purge Method using a disposable bailer. Purged "dry" on 9/11/17 will sample on 9/12/17

SAMPLER: J Andrews (PRINTED NAME) (SIGNATURE)

FIELD SAMPLING DATA SHEET

SCS ENGINEERS
15490 SW 72nd Avenue
Portland, OR 97224
Office: 503.639.9201 Fax: 503.684.6948

PROJECT NAME: Riverbend Landfill **WELL ID:** P-02
SITE ADDRESS: McMinnville , Oregon **BLIND ID:**
DUP ID: NA

WIND FROM:	N	NE	E	SE	S	SW	W	NW	LIGHT	MEDIUM	HEAVY
WEATHER:	SUNNY		CLOUDY		RAIN		?		**TEMPERATURE:** °F 95. °C [Circle appropriate units]		

HYDROLOGY/LEVEL MEASUREMENTS (Nearest 0.01 ft)

Date	Time	DT-Bottom	DT-Product	DT-Water	DTP-DTW [Product Thickness]	DTB-DTW [Water Column]		Volume (gal) [Water Column x Gal/ft]
9/11/17	14:05	18.80	—	13.38	—	5.42	X 1	0.88
9/12/17	14:20	.	.	13.34	.		X 3	2.65

Gal/ft = (dia /2)^2 x 0.163	1" = 0.041	2" = 0.163	3" = 0.367	4" = 0.653	6" = 1.469	10" = 4.080	12" = 5.875

§ METHODS: (A) Submersible Pump (B) Peristaltic Pump (C) Disposable Bailer (D) PVC/Teflon Bailer (E) Dedicated Bailer (F) Dedicated Pump (G) Other =

GROUNDWATER SAMPLING DATA (if product is detected, do NOT sample) Sample Depth:

Bottle Type	Date	Time	Method §	Amount	Volume	Preservative	Ice	Filter	pH	[√ if used]
VOA Glass	9/12/17	14:30	C	3	40 ml	HCl	YES	NO		✓
VOA Glass	/ /	:			40 ml	$Na_2S_2O_3$	YES	NO		
Amber Glass	/ /	:			250, 500, 1L	H_2SO_4	YES	NO		
White Poly	9/12/17	14:30	C	1	250, 500, 1L	None	YES	NO	NA	✓
Yellow Glass	9/12/17	14:30	C	1	250, 500, 1L	H_2SO_4	YES	NO		✓
Green Poly	/ /	:			250, 500, 1L	NaOH	YES	NO		
Red Total Poly	/ /	:			125, 250, 500	HNO_3	YES	NO		
Red Diss. Poly	9/12/17	14:30	C	1	250, 500, 1L	HNO_3	YES	YES		✓
	/ /	:			250, 500, 1L		YES			

White no acid, Yellow H2SO4, Red HNO3 — Total Bottles (include duplicate count): 6

Analysis Allowed per Bottle Type

BOTTLE TYPE	TYPICAL ANALYSIS ALLOWED PER BOTTLE TYPE (Circle applicable or write non-standard analysis below)		
VOA - Glass	(8260)	OR [✓]	WA [ ]
AMBER - Glass	(8080) (8150) (TOX)	OR [ ]	WA [ ]
WHITE - Poly	(TDS) (HCO_3/CO_3) (Cl) (SO_4)		
YELLOW - Glass	(TOC) (NH_3) (NO_2/NO_3)		
GREEN - Poly	(Cyanide)		
RED TOTAL - Poly	(As) (Sb) (Ba) (Be) (Cd) (Co) (Cr) (Cu) (Fe) (Pb) (Mn) (Ni) (Ag) (Se) (Tl) (V) (Zn) (Hardness)		
RED DISSOLVED - Poly	(Ca) (Mg) (K) (Na)		

WATER QUALITY DATA Purge Start Time: 14:07 Pump/Bailer Inlet Depth:

Meas.	Method § [Casing] [Select A-G]	Purged (gal) [Cumulative Totals]	pH	ORP	E Cond (µS)	°F Temp °C [Circle units]	DTW	Diss O_2 (mg/l)	Water Quality [Clarity, Color]
0	C (1408)	0.00	6.47	82.1	1309	14.93	13.76	3.75	clear/colorless
1	C (1412)	0.90	6.30	68.3	1310	14.76	15.61	2.93	cloudy/colorless
2	C (1418)	1.80	6.08	67.8	1317	13.80	16.64	2.65	cloudy/colorless
3	C (1422)	2.65	6.11	65.4	1319	13.81	17.99	2.62	cloudy/pale tan
4	C (1424)	2.75	6.09	63.7	1319	13.78	18.10	2.60	cloudy/colorless
5		.	.			.	.	.	
6			.			.	.	.	

Standard Purge Method using a disposable bailer. Purged "dry" on 9/11/17 will sample on 9/12/17

SAMPLER: TAndrews (PRINTED NAME) (SIGNATURE)

FIELD SAMPLING DATA SHEET

SCS ENGINEERS
15490 SW 72nd Avenue
Portland, OR 97224
Office: 503.639.9201 Fax: 503.684.6948

PROJECT NAME: Riverbend Landfill **WELL ID:** P-03
SITE ADDRESS: McMinnville , Oregon **BLIND ID:**
DUP ID: NA

WIND FROM:	N	NE	E	SE	S	SW	W	NW	LIGHT	MEDIUM	HEAVY
WEATHER:	SUNNY		CLOUDY		RAIN		?		**TEMPERATURE:** °F 85. °C		

[Circle appropriate units]

HYDROLOGY/LEVEL MEASUREMENTS (Nearest 0.01 ft)

Date	Time	DT-Bottom	DT-Product	DT-Water	DTP-DTW [Product Thickness]	DTB-DTW [Water Column]		Volume (gal) [Water Column x Gal/ft]
9/11/17	12:40	17.20	—	16.45	—	0.75	X 1	0.12
9/12/17	9:45	.	.	16.48	.		X 3	0.37

Gal/ft = (dia./2)^2 x 0.163	1" = 0.041	2" = 0.163	3" = 0.367	4" = 0.653	6" = 1.469	10" = 4.080	12" = 5.875

§ METHODS: (A) Submersible Pump (B) Peristaltic Pump (C) Disposable Bailer (D) PVC/Teflon Bailer (E) Dedicated Bailer (F) Dedicated Pump (G) Other =

GROUNDWATER SAMPLING DATA (if product is detected, do NOT sample)

Sample Depth:

Bottle Type	Date	Time	Method §	Amount & Volume		Preservative	Ice	Filter	pH	√ if used
VOA Glass	9/12/17	10:00	C	3	40 ml	HCl	YES	NO		✓
VOA Glass	/ /	:			40 ml	$Na_2S_2O_3$	YES	NO		
Amber Glass	/ /	:			250, 500, 1L	H_2SO_4	YES	NO		
White Poly	9/12/17	10:00	C	1	250, 500, 1L	None	YES	NO	NA	✓
Yellow Glass	9/12/17	10:00	C	1	250, 500, 1L	H_2SO_4	YES	NO		✓
Green Poly	/ /	:			250, 500, 1L	NaOH	YES	NO		
Red Total Poly	/ /	:			125, 250, 500	HNO_3	YES	NO		
Red Diss. Poly	9/12/17	10:00	C	1	250, 500, 1L	HNO_3	YES	YES		✓
	/ /	:			250, 500, 1L		YES			

White no acid, Yellow H2SO4, Red HNO3 — 6 Total Bottles (include duplicate count):

Analysis Allowed per Bottle Type

BOTTLE TYPE	TYPICAL ANALYSIS ALLOWED PER BOTTLE TYPE (Circle applicable or write non-standard analysis below)
VOA - Glass	(8260) OR [✓] WA [ ]
AMBER - Glass	(8080) (8150) (TOX) OR [ ] WA [ ]
WHITE - Poly	(TDS) (HCO_3/CO_3) (Cl) (SO_4)
YELLOW - Glass	(TOC) (NH_3) (NO_3/NO_2)
GREEN - Poly	(Cyanide)
RED TOTAL - Poly	(As) (Sb) (Ba) (Be) (Cd) (Co) (Cr) (Cu) (Fe) (Pb) (Mn) (Ni) (Ag) (Se) (Tl) (V) (Zn) (Hardness)
RED DISSOLVED - Poly	(Ca) (Mg) (K) (Na)

WATER QUALITY DATA

Purge Start Time: 12:45 Pump/Bailer Inlet Depth:

Meas.	Method §	Purged (gal)	pH	ORP	E Cond (µS)	°F Temp (°C)	DTW	Diss O_2 (mg/l)	Water Quality
0	C (1245)	0.00	6.61	96.8	495	13.63	16.60	4.80	Pale tan
1	C (1247)	0.15	6.25	91.7	494	12.34	16.85	4.75	Pale tan
2	C (1250)	0.25	6.23	90.1	494	12.26	16.91	4.70	Pale tan
3	C (1255)	0.40	6.23	89.8	493	12.28	16.95	4.72	Pale tan
4		.	.			.	.	.	
5		.	.			.	.	.	
6			.			.	.	.	

[Casing] [Select A-G] [Cumulative Totals] [Circle units] [Clarity, Color]

Standard Purge Method using a disposable bailer.
Well purged "dry" on 9/11/17. Let recover overnight and sample on 9/12/17

SAMPLER: T Andrews (PRINTED NAME) (SIGNATURE)

FIELD SAMPLING DATA SHEET

SCS ENGINEERS
15490 SW 72nd Avenue
Portland, OR 97224
Office: 503.639.9201 Fax: 503.684.6948

PROJECT NAME: Riverbend Landfill **WELL ID:** 115P
SITE ADDRESS: McMinnville , Oregon **BLIND ID:**
DUP ID: NA

WIND FROM:	N	NE	E	SE	S	SW	W	NW	LIGHT	MEDIUM	HEAVY
WEATHER:	SUNNY		CLOUDY		RAIN		?		**TEMPERATURE:** °F 88. °C		

[Circle appropriate units]

HYDROLOGY/LEVEL MEASUREMENTS (Nearest 0.01 ft)

Date	Time	DT-Bottom	DT-Product	DT-Water	DTP-DTW [Product Thickness]	DTB-DTW [Water Column]		Volume (gal) [Water Column x Gal/ft]
/ /	:	.	.	.	.	.	X 1	.
/ /	:	.	.	.	.		X 3	.

Gal/ft = (dia./2)^2 x 0.163	1" =	0.041	2" =	0.163	3" =	0.367	4" =	0.653	6" =	1.469	10" =	4.080	12" =	5.875

§ METHODS (A) Submersible Pump (B) Peristaltic Pump (C) Disposable Bailer (D) PVC/Teflon Bailer (E) Dedicated Bailer (F) Dedicated Pump (G) Other =

GROUNDWATER SAMPLING DATA (if product is detected, do NOT sample) Sample Depth:

Bottle Type	Date	Time	Method §	Amount	Volume	Preservative	Ice	Filter	pH	[√ if used]
VOA Glass	9/12/17	15:30	A	3	40 ml	HCl	YES	NO		✓
VOA Glass	/ /	:			40 ml	$Na_2S_2O_3$	YES	NO		
Amber Glass	/ /	:			250, 500, 1L	H_2SO_4	YES	NO		
White Poly	9/12/17	15:30	A	1	250, 500, 1L	None	YES	NO	NA	✓
Yellow Glass	9/12/17	15:30	A	1	250, 500, 1L	H_2SO_4	YES	NO		✓
Green Poly	/ /	:			250, 500, 1L	NaOH	YES	NO		
Red Total Poly	/ /	:			125, 250, 500	HNO_3	YES	NO		
Red Diss. Poly	9/12/17	15:30	A		250, 500, 1L	HNO_3	YES	YES		✓
	/ /	:			250, 500, 1L		YES			

White no acid, Yellow H2SO4, Red HNO3 Total Bottles (include duplicate count):

Analysis Allowed per Bottle Type	BOTTLE TYPE	TYPICAL ANALYSIS ALLOWED PER BOTTLE TYPE (Circle applicable or write non-standard analysis below)	
	VOA - Glass	(8260)	OR [X] WA [ ]
	AMBER - Glass	(8080) (8150) (TOX)	OR [ ] WA [ ]
	WHITE - Poly	(TDS) (HCO_3/CO_3) (Cl) (SO_4)	
	YELLOW - Glass	(TOC) (NH_3) (NO_3/NO_2)	
	GREEN - Poly	(Cyanide)	
	RED TOTAL - Poly	(As) (Sb) (Ba) (Be) (Cd) (Co) (Cr) (Cu) (Fe) (Pb) (Mn) (Ni) (Ag) (Se) (Tl) (V) (Zn) (Hardness)	
	RED DISSOLVED - Poly	(Ca) (Mg) (K) (Na)	

WATER QUALITY DATA Purge Start Time: 15:30 Pump/Bailer Inlet Depth:

Meas.	Method §	Purged (gal)	pH	ORP	E Cond (µS)	°F Temp °C	DTW	Diss O_2 (mg/l)	Water Quality
0	A (1530)	0.00	7.65	890	23,228	35.24	/	0.10	Clear/Dark Olive
1		.	.			.	.	.	
2		.	.			.	.	.	
3		.	.			.	.	.	
4		.	.			.	.	.	
5		.	.			.	.	.	
6		.	.			.	.	.	

[Casing] [Select A-G] [Cumulative Totals] [Circle units] [Clarity, Color]

Liquid Level 16.6"

SAMPLER: T Andrews (PRINTED NAME) (SIGNATURE)

FIELD SAMPLING DATA SHEET

SCS ENGINEERS
15490 SW 72nd Avenue
Portland, OR 97224
Office: 503.639.9201 Fax: 503.684.6948

PROJECT NAME: Riverbend Landfill **WELL ID:** 4/5S
SITE ADDRESS: McMinnville , Oregon **BLIND ID:**
DUP ID: NA

WIND FROM:	N	NE	E	SE	S	SW	W	NW	LIGHT	MEDIUM	HEAVY
WEATHER:	SUNNY	CLOUDY	RAIN	?					**TEMPERATURE:**	°F 88 .	°C

(Circle appropriate units)

HYDROLOGY/LEVEL MEASUREMENTS (Nearest 0.01 ft)

Date	Time	DT-Bottom	DT-Product	DT-Water	DTP-DTW [Product Thickness]	DTB-DTW [Water Column]		Volume (gal) [Water Column x Galift]
/ /	:	.	.	.	.	.	X 1	.
/ /	:	.	.	.	.		X 3	.

Gal/ft = (dia./2)^2 x 0.163	1" =	0.041	2" =	0.163	3" =	0.367	4" =	0.653	6" =	1.469	10" =	4.080	12" =	5.875

§ METHODS: (A) Submersible Pump (B) Peristaltic Pump (C) Disposable Bailer (D) PVC/Teflon Bailer (E) Dedicated Bailer (F) Dedicated Pump (G) Other =

GROUNDWATER SAMPLING DATA (if product is detected, do NOT sample) Sample Depth:

Bottle Type	Date	Time	Method §	Amount & Volume		Preservative	Ice	Filter	pH	[√ if used]
VOA Glass	9/12/17	15:45	A	3	40 ml	HCl	YES	NO		✓
VOA Glass	/ /	:			40 ml	$Na_2S_2O_3$	YES	NO		
Amber Glass	/ /	:			250, 500, 1L	H_2SO_4	YES	NO		
White Poly	9/12/17	15:45	A	1	250, 500, 1L	~~None~~	YES	NO	NA	✓
Yellow Glass	9/12/17	15:45	A	1	250, 500, 1L	H_2SO_4	YES	NO		✓
Green Poly	/ /	:			250, 500, 1L	NaOH	YES	NO		
Red Total Poly	/ /	:			125, 250, 500	HNO_3	YES	NO		
Red Diss. Poly	9/12/17	15:45	A	1	250, 500, 1L	HNO_3	YES	YES		✓
	/ /	:			250, 500, 1L		YES			

White no acid, Yellow H2SO4, Red HNO3 Total Bottles (include duplicate count):

Analysis Allowed per Bottle Type

BOTTLE TYPE	TYPICAL ANALYSIS ALLOWED PER BOTTLE TYPE (Circle applicable or write non-standard analysis below)		
VOA - Glass	(8260)	OR ~~AT~~	WA [ ]
AMBER - Glass	(8080) (8150) (TOX)	OR [ ]	WA [ ]
WHITE - Poly	(TDS) (HCO$_3$/CO$_3$) (Cl) (SO$_4$)		
YELLOW - Glass	(TOC) (NH$_3$) (NO$_3$/NO$_2$)		
GREEN - Poly	(Cyanide)		
RED TOTAL - Poly	(As) (Sb) (Ba) (Be) (Cd) (Co) (Cr) (Cu) (Fe) (Pb) (Mn) (Ni) (Ag) (Se) (Tl) (V) (Zn) (Hardness)		
RED DISSOLVED - Poly	(Ca) (Mg) (K) (Na)		

WATER QUALITY DATA Purge Start Time: 15:45 Pump/Bailer Inlet Depth:

Meas.	Method §	Purged (gal)	pH	ORP	E Cond (µS)	°F Temp °C	DTW	Diss O_2 (mg/l)	Water Quality
0	A (1545)	0.00	6.48	10.7	1788	33.95	—	1.35	Clear/colorless
1		.	.			.	.	.	
2		.	.			.	.	.	
3		.	.			.	.	.	
4		.	.			.	.	.	
5		.	.			.	.	.	
6		.	.			.	.	.	

[Casing] [Select A-G] [Cumulative Totals] [Circle units] [Clarity, Color]

Liquid Level 14.71'

SAMPLER: T Andrews (PRINTED NAME) (SIGNATURE)

FIELD SAMPLING DATA SHEET

SCS ENGINEERS
15490 SW 72nd Avenue
Portland, OR 97224
Office: 503.639.9201 Fax: 503.684.6948

PROJECT NAME: Riverbend Landfill **WELL ID:** 617 P

SITE ADDRESS: McMinnville , Oregon **BLIND ID:**

DUP ID: NA

WIND FROM:	N	NE	E	SE	S	SW	W	NW	LIGHT	MEDIUM	HEAVY
WEATHER:	SUNNY		CLOUDY		RAIN		?		**TEMPERATURE:**	90 .	°C

(Circle appropriate units)

HYDROLOGY/LEVEL MEASUREMENTS (Nearest 0.01 ft)

Date	Time	DT-Bottom	DT-Product	DT-Water	DTP-DTW [Product Thickness]	DTB-DTW [Water Column]		Volume (gal) [Water Column x Gal/ft]
/ /	:	.	.	.	.	.	X 1	.
/ /	:	.	.	.	.		X 3	.

Gal/ft = (dia./2)^2 x 0.163	1" = 0.041	2" = 0.163	3" = 0.367	4" = 0.653	6" = 1.469	10" = 4.080	12" = 5.875

§ METHODS: (A) Submersible Pump (B) Peristaltic Pump (C) Disposable Bailer (D) PVC/Teflon Bailer (E) Dedicated Bailer (F) Dedicated Pump (G) Other =

GROUNDWATER SAMPLING DATA (if product is detected, do NOT sample) Sample Depth:

Bottle Type	Date	Time	Method §	Amount	Volume	Preservative	Ice	Filter	pH	[√ if used]
VOA Glass	9/12/17	15:00	A	3	40 ml	HCl	YES	NO		✓
VOA Glass	/ /	:			40 ml	$Na_2S_2O_3$	YES	NO		
Amber Glass	/ /	:			250, 500, 1L	H_2SO_4	YES	NO		
White Poly	9/12/17	15:00	A	1	250, 500, 1L	None	YES	NO	NA	✓
Yellow Glass	9/12/17	15:00	A	1	250, 500, 1L	H_2SO_4	YES	NO		✓
Green Poly	/ /	:			250, 500, 1L	NaOH	YES	NO		
Red Total Poly	/ /	:			125, 250, 500	HNO_3	YES	NO		
Red Diss. Poly	9/12/17	15:00	A	1	250, 500, 1L	HNO_3	YES	YES		✓
	/ /	:			250, 500, 1L		YES			

White no acid, Yellow H2SO4, Red HNO3 6 Total Bottles (include duplicate count):

Analysis Allowed per Bottle Type

BOTTLE TYPE	TYPICAL ANALYSIS ALLOWED PER BOTTLE TYPE (Circle applicable or write non-standard analysis below)		
VOA - Glass	(8260)	OR [✓]	WA [ ]
AMBER - Glass	(8080) (8150) (TOX)	OR [ ]	WA [ ]
WHITE - Poly	(PO4) (HCO3/CO3) (Cl) (SO4)		
YELLOW - Glass	(TOC) (NH3) (NO3/NO2)		
GREEN - Poly	(Cyanide)		
RED TOTAL - Poly	(As) (Sb) (Ba) (Be) (Cd) (Co) (Cr) (Cu) (Fe) (Pb) (Mn) (Ni) (Ag) (Se) (Tl) (V) (Zn) (Hardness)		
RED DISSOLVED - Poly	(Ca) (Mg) (K) (Na)		

WATER QUALITY DATA Purge Start Time: 15 : 00 Pump/Bailer Inlet Depth:

Meas.	Method §	Purged (gal)	pH	ORP	E Cond (µS)	°F Temp °C	DTW	Diss O_2 (mg/l)	Water Quality
0	A (1500)	0.00	7.33	171.9	12,618	34.62		0.59	Dark Olive
1		.	.			.	.	.	
2		.	.			.	.	.	
3		.	.			.	.	.	
4		.	.			.	.	.	
5		.	.			.	.	.	
6		.	.			.	.	.	

[Casing] [Select A-G] [Cumulative Totals] [Circle units] [Clarity, Color]

Liquid Level 18.41'

SAMPLER: T Andrews (PRINTED NAME) (SIGNATURE)

FIELD SAMPLING DATA SHEET

SCS ENGINEERS
15490 SW 72nd Avenue
Portland, OR 97224
Office: 503.639.9201 Fax: 503.684.6948

PROJECT NAME: Riverbend Landfill **WELL ID:** 6/7S
SITE ADDRESS: McMinnville , Oregon **BLIND ID:**
DUP ID: NA

WIND FROM:	~~N~~	~~NE~~	E	SE	S	SW	W	NW	LIGHT	MEDIUM	HEAVY
WEATHER:	SUNNY		CLOUDY		RAIN		?		**TEMPERATURE:**	F 90 .	°C

[Circle appropriate units]

HYDROLOGY/LEVEL MEASUREMENTS (Nearest 0.01 ft)

Date	Time	DT-Bottom	DT-Product	DT-Water	DTP-DTW [Product Thickness]	DTB-DTW [Water Column]		Volume (gal) [Water Column x Gal/ft]
/ /	:	.	.	.	.	.	X 1	.
/ /	:	.	.	.	.		X 3	.

Gal/ft = (dia./2)^2 x 0.163	1" =	0.041	2" =	0.163	3" =	0.367	4" =	0.653	6" =	1.469	10" =	4.080	12" =	5.875

§ METHODS: (A) Submersible Pump (B) Peristaltic Pump (C) Disposable Bailer (D) PVC/Teflon Bailer (E) Dedicated Bailer (F) Dedicated Pump (G) Other =

GROUNDWATER SAMPLING DATA (if product is detected, do NOT sample) Sample Depth:

Bottle Type	Date	Time	Method §	Amount & Volume		Preservative	Ice	Filter	pH	[√ if used] √
VOA Glass	9/12/17	15:15	A	3	40 ml	HCl	YES	NO		✓
VOA Glass	/ /	:			40 ml	$Na_2S_2O_3$	YES	NO		
Amber Glass	/ /	:			250, 500, 1L	H_2SO_4	YES	NO		
White Poly	9/12/17	15:15	A	1	250, 500, 1L	None	YES	NO	NA	✓
Yellow Glass	9/12/17	15:15	A	1	250, 500, 1L	H_2SO_4	YES	NO		✓
Green Poly	/ /	:			250, 500, 1L	NaOH	YES	NO		
Red Total Poly	/ /	:			125, 250, 500	HNO_3	YES	NO		
Red Diss. Poly	9/12/17	15:15	A	1	250, 500, 1L	HNO_3	YES	YES		✓
	/ /	:			250, 500, 1L		YES			

White no acid, Yellow H2SO4, Red HNO3 6 Total Bottles (include duplicate count):

Analysis Allowed per Bottle Type

BOTTLE TYPE	TYPICAL ANALYSIS ALLOWED PER BOTTLE TYPE (Circle applicable or write non-standard analysis below)		
VOA - Glass	(8260)	OR [✓]	WA [ ]
AMBER - Glass	(8080) (8150) (TOX)	OR [ ]	WA [ ]
WHITE - Poly	(TDS) (HCO_3,CO_3) (Cl) (SO_4)		
YELLOW - Glass	(TOC) (NH_3) (NO_3,NO_2)		
GREEN - Poly	(Cyanide)		
RED TOTAL - Poly	(As) (Sb) (Ba) (Be) (Cd) (Co) (Cr) (Cu) (Fe) (Pb) (Mn) (Ni) (Ag) (Se) (Tl) (V) (Zn) (Hardness)		
RED DISSOLVED - Poly	(Ca) (Mg) (K) (Na)		

WATER QUALITY DATA Purge Start Time: 15:15 Pump/Bailer Inlet Depth:

Meas.	Method §	Purged (gal)	pH	ORP	E Cond (µS)	°F Temp (°C)	DTW	Diss O_2 (mg/l)	Water Quality
0	B (15:15)	0.00	6.78	118.6	6.359	32.56	/	0.56	Pale Yellow
1		.	.			.	.	.	
2		.	.			.	.	.	
3		.	.			.	.	.	
4		.	.			.	.	.	
5		.	.			.	.	.	
6		.	.			.	.	.	

[Casing] [Select A-G] [Cumulative Totals] [Circle units] [Clarity, Color]

Liquid Level 10.9"

SAMPLER: T Andrews (PRINTED NAME) (SIGNATURE)

Well Development Forms

WELL DEVELOPMENT FORM

SCS ENGINEERS
15940 SW 72nd Ave, Portland, OR 97224
Ph: (503) 639-9201, Fax: (503) 684-6948

Client: Waste Management
Project #: 04216038.17
Site Name: Riverbend Landfill
Site Location: McMinnville OR
Development Method: Surge / Purge
Total Water Removed: 24.00 gal
Water Contained? No
Estimate of specific capacity or recharge to well: 0.40'/min

Date: 5/9/17
Well ID: MW-3A
Initial DTW: 20.40'
Initial DTB: 37.43'
Casing Diameter: 2"
Casing Volume: 2.77
WL Meter #: Solinst Model 101 56478
Field Personnel: BM

Final DTW: 34.15
Final DTB: 37.55

Time	Cumulative Gallons Removed	pH S.U.	Temperature °F (°C)	Specific Conductance (uS) mS	Dissolved Oxygen mg/L	DTW (TOC) ft-bgs	Silt/Sand mL/1000mL	Comments
1549	3.00	6.50	16.43	904	6.42	20.00	2.0	cloudy/Brown
1553	6.00	6.36	15.20	876	6.35	29.00	NR	cloudy/light tan
1557	9.00	6.45	14.90	925	2.35	32.00	NR	cloudy/light tan
1602	12.00	6.95	15.33	961	2.96	32.10	NR	cloudy/light tan
1624	15.00	6.75	15.50	1096	9.08	BTOP	NR	cloudy/light tan
1635	18.00	6.62	15.59	1109	8.46	34.10	NR	cloudy/light tan
1650	21.00	6.46	15.63	1131	7.52	33.10	NR	clear/light tan
17.00	24.00	6.41	16.12	1150	7.77	34.15	NR	clear/Colorless

NR = Not enough Silt/Sand to measure.

Signed: [signature]

WELL DEVELOPMENT FORM

SCS ENGINEERS
15940 SW 72nd Ave, Portland, OR 97224
Ph: (503) 639-9201, Fax: (503) 684-6948

Client: Waste Management
Project #: 04216038.17
Site Name: Riverbend Landfill
Site Location: McMinnville OR
Development Method: Surge / Purge
Total Water Removed: 9.00 gal
Water Contained? No
Estimate of specific capacity or recharge to well: 0.03'/min

Date: 5/9/17
Well ID: MW-4A
Initial DTW: 27.70 Final DTW: 37.20
Initial DTB: 38.85 Final DTB: 38.85
Casing Diameter: 2"
Casing Volume: 1.8 gal
WL Meter #: Solinst Model 101 56478
Field Personnel: B Mcmurran

Time	Cumulative Gallons Removed	pH S.U.	Temperature °F (°C)	Specific Conductance (uS) mS	Dissolved Oxygen mg/L	DTW (TOC) ft-bgs	Silt/Sand mL/1000mL	Comments
1443	2.0	5.82	18.07	1048	4.71	29.30	NR	cloudy/grayish
1447	4.5	5.78	15.40	1072	2.31	32.80	NR	cloudy/grayish
1454	7.75	5.82	15.51	1083	1.40	36.10	NR	cloudy/colorless
1504	8.75	5.81	15.79	1075	1.12	37.20	NR	clear/colorless
1507	9.00	—	—	—	—	BTOP	NR	—

to little Silt/Sand to measure

Signed: B

WELL DEVELOPMENT FORM

SCS ENGINEERS
15940 SW 72nd Ave, Portland, OR 97224
Ph: (503) 639-9201, Fax: (503) 684-6948

Client: Waste Management
Project #: 04216038.17
Site Name: Riverbend Landfill
Site Location: McMinnville, OR
Development Method: Surge / Purge
Total Water Removed: 15.00 gal
Water Contained? No
Estimate of specific capacity or recharge to well: 0.10'/min

Date: 5/22/17
Well ID: MW-6A
Initial DTW: 6.35
Final DTW: 21.56
Initial DTB: 23.54
Final DTB: 23.52
Casing Diameter: 2"
Casing Volume: 2.75 gal
WL Meter #: Solinst Model 101 56478
Field Personnel: B McMullin

Time	Cumulative Gallons Removed	pH S.U.	Temperature °F (°C)	Specific Conductance (uS) mS	Dissolved Oxygen mg/L	DTW (TOC) ft-bgs	Silt/Sand mL/1000mL	Comments
1506	2.75	6.15	14.56	407	3.31	14.55	NR	cloudy / light tan
1511	5.50	5.80	13.26	415	2.57	16.70	NR	cloudy / light tan
1515	8.25	5.79	13.20	426	2.41	21.00	NR	cloudy / light tan
1540	10.50	6.27	13.85	415	2.31	BtoP	NR	cloudy / light tan
1618	13.25	6.92	14.34	431	2.35	BtoP	NR	Cloudy / Colorless
1710	15.00	6.55	15.33	443	6.52	BtoP	NR	cloudy / Colorless

NR - turbidity less than recordable in Cones

Signed:

MW-3A, MW-4A, and MW-6A Exploratory Boring Logs

LOG OF EXPLORATORY BORING

PROJECT NAME **Remedial Investigation**
LOCATION **Riverbend Landfill; McMinnville, Oregon**
DRILLED BY **GeoTech Explorations**
DRILL METHOD **Hollow Stem Auger**
LOGGED BY **Craig D. Fanshier**

BORING NO. **MW-3A**
PAGE **1 OF 2**
GROUND ELEV. **138.20'**
TOTAL DEPTH **35.00'**
DATE COMPLETED **06/23/93**

RECOVERY PERCENT	POCKET PENETRO-METER (Tons/SF)	PENETRA-TION (Blows/Ft)	GROUND WATER LEVELS	DEPTH IN FEET	SAMPLES	WELL DETAILS	LITHOLOGIC COLUMN	LITHOLOGIC DESCRIPTION
100								**0 to 8.5 feet: SILTY CLAY (CL)**, dark brown (10YR 3/3), evenly colored; medium plasticity fines; stiff to very stiff; damp. (COMPACTED LANDFILL ENGINEERED BERM).
100	0.5							@ 3.5 to 7.0 feet: weakly developed platy soil peds.
	1.5			5				@ 4.5 feet: traces reddish brown mottling, horizontally oriented.
	1.5							
	3.5							@ 6.5 feet: very stiff.
	4							@ 7.0 to 8.0 feet: two dark grayish brown intervals, approximately 2-inches thick.
	4							
100	2.5							**8.5 to 10.4 feet: CLAYEY SILT (ML)**, dark yellowish brown (10YR 4/4); 97% low to medium plasticity fines; 3% fine sand; soil is crumbly; very stiff; damp to moist.
	2.5			10				
	2.5							**10.4 to 13.0 feet: SILTY CLAY (CL)**, dark greenish gray (5G 4/1); medium plasticity fines; stiff; moist.
	1.5							
	1.5							
	1.5		▽ 6/23/93					@ 12.5 feet: moist to wet.
100	1.5 to 2.5							**13.0 to 13.75 feet: SANDY SILT (ML)**, dark yellowish brown (10YR 4/4); 85-90% low to medium plasticity fines; 3% fine sand, subrounded, micaceous; stiff; wet.
	3							
	2			15				**13.75 to 28.5 feet: SILTY CLAY (CL)**, dark gray with some dark grayish brown mottling; medium plasticity fines, some silt content; blocky soil peds, crumbly soil; trace macropores; stiff to very stiff; moist along soil peds; easy drilling.
	2							
	2		▼ 8/10/93					
100	1.5 to 2.5							
	3			20				

REMARKS

Drilled w/8" OD (4.25" ID) HSA. Samples continuously collected w/5'-long, 3" ID split barrel and 1.5'-long, 3" OD split spoon fitted w/rings. A 2" PVC monitoring well was constructed in the borehole. Well construction information presented in Well Details. See explanation for definition of symbols.

LOG OF EXPLORATORY BORING

PROJECT NAME Remedial Investigation
LOCATION Riverbend Landfill; McMinnville, Oregon
DRILLED BY GeoTech Explorations
DRILL METHOD Hollow Stem Auger
LOGGED BY Craig D. Fanshier

BORING NO. MW-3A
PAGE 2 OF 2
GROUND ELEV. 138.20'
TOTAL DEPTH 35.00'
DATE COMPLETED 06/23/93

RECOVERY PERCENT	POCKET PENETRO-METER (Tons/SF)	PENETRA-TION (Blows/Ft)	GROUND WATER LEVELS	DEPTH IN FEET	SAMPLES	WELL DETAILS	LITHOLOGIC COLUMN	LITHOLOGIC DESCRIPTION
100	3							**13.75 to 28.5 feet: SILTY CLAY (CL), continued.**
	1.5							@ 20.0 feet: color changes to dark brown (10Y$ 4/3), with 30% light gray mottling, 5% rust red mottling; trace fine sand, some mica; weakly developed blocky soil peds; approximately two small macropore per foot of core; moist to wet; free water along vertical soil ped fractures.
	2.5							@ 21.0 to 25.5 feet: soft to stiff.
	1.5 to 2.5							@ 23.5 to 24.0 feet: wet along vertical soil ped fractures.
	1							@ 24.0 to 26.8 feet: brown and gray mottling; 5% fine sand; soil is crumbly.
	0.75			25				
	1							
	2.5							@ 26.5 to 28.5 feet: soil is firmer.
								@ 27.0 to 28.5 feet: color changes to a blue gray (5B 6/1), and is light gray brown along open soil peds, some rust reddish staining along soil ped fractures (iron oxide?), trace black staining along relic root traces; medium to highly plasticity fines; 1- to 1.5-inch blocky soil peds.
	2.5							
	2			30				**28.5 to 35.0 feet: CLAY (CL), bluish gray (5B 5/1), with 15% strong reddish brown mottling along ped fractures; medium to high plasticity fines; very few macropores; very stiff; moist to wet; drilling is easy, sample in core barrel is hard to cut open with sampling trowel.**
	2.5							
	2.25							
	2.25							
	2.25							
	1.5							
	1							
	1.5			35				**BORING TERMINATED AT 35.0 FEET.**
				40				

REMARKS

Drilled w/8" OD (4.25" ID) HSA. Samples continuously collected w/5'-long, 3" ID split barrel and 1.5'-long, 3" OD split spoon fitted w/rings. A 2" PVC monitoring well was constructed in the borehole. Well construction information presented Well Details. See explanation for definition of symbols.

WELL DETAILS

EMCON ASSOCIATES

CLIENT Riverbend Landfill Company, Inc.
PROJECT NUMBER 0258-001.24
PROJECT NAME MW-5 Remedial Investigation
LOCATION McMinnville, Oregon
WELL PERMIT NO. 54789

BORING / WELL NO. MW-3A
TOP OF CASING ELEV. 140.81
GROUND SURFACE ELEV. 138.2
DATUM Feet Mean Sea Level
INSTALLATION DATE 6/24/93

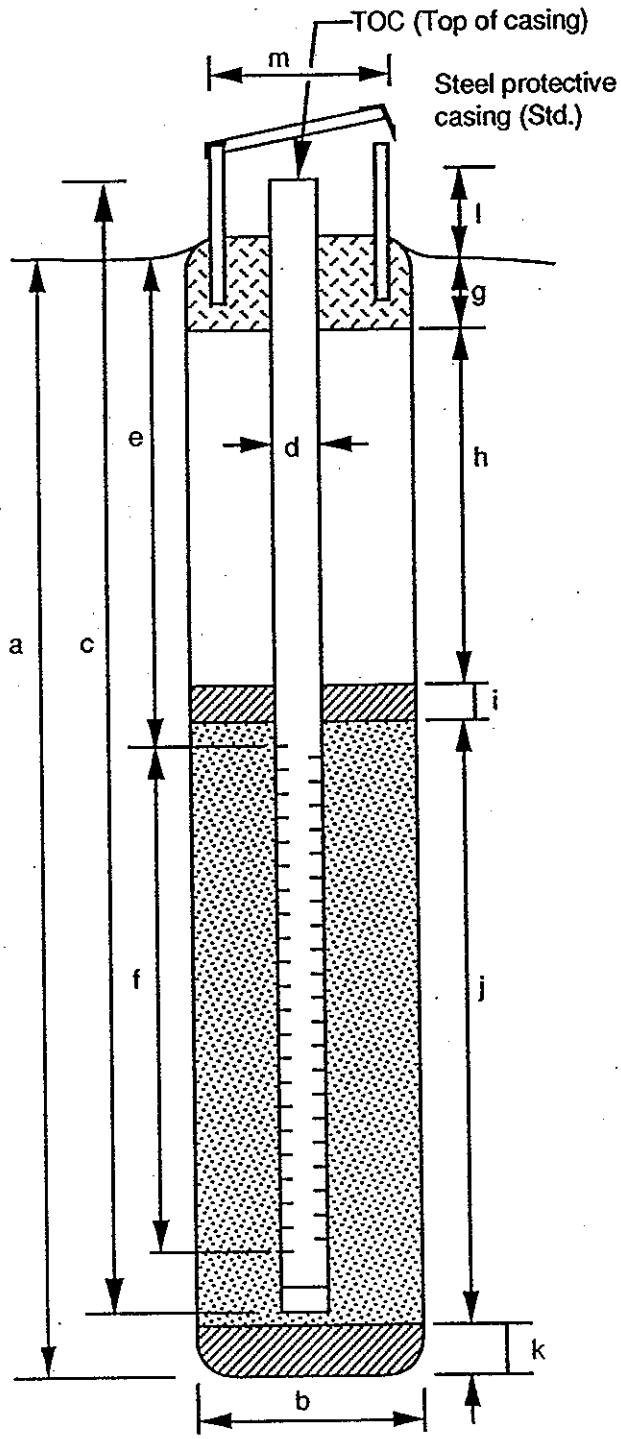

EXPLORATORY BORING

a. Total depth 35.0 ft.
b. Diameter 8 in.
Drilling method Hollow Stem Auger

WELL CONSTRUCTION

c. Total casing length 37.5 ft.
Material Schedule 40 PVC
d. Diameter 2 in.
e. Depth to top perforations 24.3 ft.
f. Perforated length 9.5 ft.
Perforated interval from 24.3 to 33.8 ft.
Perforation type Machine Slotted
Perforation size 0.010 Inches
g. Surface seal 2.2 ft.
Material Concrete
h. Backfill NA ft.
Material NA
i. Seal 18.8 ft.
Material Bentonite Chips
j. Gravel pack 14.0 ft.
Gravel pack interval from 21.0 to 35.0 ft.
Material 10-20 Gradation Sand
k. Bottom seal/fill NA ft.
Material NA
l. Casing stickup 2.5 ft.
m. Protective casing diameter 6.5 in.

Prepared by: Craig Fanshier Reviewed by: Craig D. Fanshier Date: 10/1/93

Rev. 7/23/91
Ventura Mac 4

LOG OF EXPLORATORY BORING

PROJECT NAME **Remedial Investigation**
LOCATION **Riverbend Landfill; McMinnville, Oregon**
DRILLED BY **GeoTech Explorations**
DRILL METHOD **Hollow Stem Auger**
LOGGED BY **Craig D. Fanshier**

BORING NO. **MW-4A**
PAGE **1 OF 2**
GROUND ELEV. **139.20'**
TOTAL DEPTH **71.80'**
DATE COMPLETED **06/10/93**

RECOVERY PERCENT	POCKET PENETRO-METER (Tons/SF)	PENETRA-TION (Blows/Ft)	GROUND WATER LEVELS	DEPTH IN FEET	SAMPLES	WELL DETAILS	LITHOLOGIC COLUMN	LITHOLOGIC DESCRIPTION
75								**0 to 9.5 feet: SILTY CLAY (CL)**, dark grayish brown (10YR 4/2), trace reddish brown mottling; medium plasticity fines; some small rootlets; stiff; damp.
	2.5							
	3							
	1							
	1							@ 3.5 to 5.3 feet: color changes to gray; wet.
100	4.5			5				@ 4.5 to 8.0 feet: very stiff to hard.
	4.5							@ 5.3 feet: color changes to light brown with 10-30% gray mottling.
	4.5							
	4							@ 6.5 to 7.5 feet: silt content increases.
	3.5							
	3							
	2							
	2.5							
	1.5							
100	1.5			10				**9.5 to 16.5 feet: CLAYEY SILT (ML)**, dark grayish brown (10YR 4/2), with 5-10% gray mottling 1/2-inch diameter; low to medium plasticity fines; trace fine sand, micaceous; weakly developed platy soil peds; stiff, damp.
	1 to 1.5							
	1							@ 12.5 feet: less gray mottling, rust red mottling starts.
	2 to 3							@ 13.0 feet: all brown.
	3							@ 13.5 to 16.0 feet: dark brown (10YR 3/2), very little to no mottling; low plasticity fines; trace mica; very stiff; damp.
	4.5							
	4.5							
100		28		15				@ 15.5 to 16.0 feet: transition to next soil unit indicated by increasing greenish gray crumbly soil with some decayed organic material.
100	1							**16.5 to 36.2 feet: SILTY CLAY (CL)**, grayish brown (10YR 4/2), very little mottling; medium plasticity fines; stiff to very stiff; damp to moist.
	2 to 2.5							
	1.5 to 2							
	1.5 to 2							
	3							@ 17.0 to 17.5 feet: approximately 50% brown mottling.
	3							
	3.5 to 4							@ 17.5 to 21.5 feet: 95% gray, very little mottling; silt content increases.
100				20				

REMARKS

Drilled w/8" OD (4.25" ID) HSA. Samples continuously collected w/5'-long, 3" ID split barrel and 1.5'-long, 3" OD split spoon fitted w/rings. A 2" PVC monitoring well was constructed in the borehole. Well construction information presented in Well Details. See explanation for definition of symbols.

LOG OF EXPLORATORY BORING

PROJECT NAME Remedial Investigation
LOCATION Riverbend Landfill; McMinnville, Oregon
DRILLED BY GeoTech Explorations
DRILL METHOD Hollow Stem Auger
LOGGED BY Craig D. Fanshier

BORING NO. MW-4A
PAGE 2 OF 2
GROUND ELEV. 139.20'
TOTAL DEPTH 71.80'
DATE COMPLETED 06/10/93

RECOVERY PERCENT	POCKET PENETRO-METER (Tons/SF)	PENETRA-TION (Blows/Ft)	GROUND WATER LEVELS	DEPTH IN FEET	SAMPLES	WELL DETAILS	LITHOLOGIC COLUMN	LITHOLOGIC DESCRIPTION
								16.5 to 36.2 feet: SILTY CLAY (CL), continued.
	1.5							@ 21.5 feet: low to medium plasticity fines; moderately developed granular to blocky soil peds; some small macropores; trace very fine roothairs; wet.
	1.75		5/25/93					
	2							
	2.5							
	2.5							
	3							
100	1.5 to 2			25				@ 25.0 to 27.0 feet: approximately 2% of soil matrix contains black wood fragment; some small pin-hole size macropores.
	2.5							
	2.5							
	2.5							
	2							@ 29.0 feet: free water in macropores.
93	1.5	22	8/10/93	30				
100	2.5 to 3.5							@ 31.0 to 34.0 feet: color changes to light brown with 10-30% gray mottling; medium to high plasticity clay; abundant macropores up to 1/4-inch.
	3.5							
	3.5							
	3.5							
	3.5							@ 34.0 to 36.0 feet: increases silt content; soil in core barrel is crumbly.
100	1.5							
	1.5			35				
	1.5							
								BORING TERMINATED AT 36.2 FEET.
				40				

REMARKS

Drilled w/8" OD (4.25" ID) HSA. Samples continuously collected w/5'-long, 3" ID split barrel and 1.5'-long, 3" OD split spoon fitted w/rings. A 2" PVC monitoring well was constructed in the borehole. Well construction information presented in Well Details. See explanation for definition of symbols.

WELL DETAILS

EMCON ASSOCIATES

CLIENT Riverbend Landfill Company, Inc.
PROJECT NUMBER 0258-001.24
PROJECT NAME MW-5 Remedial Investigation
LOCATION McMinnville, Oregon
WELL PERMIT NO. 52006

BORING / WELL NO. MW-4A
TOP OF CASING ELEV. 142.31
GROUND SURFACE ELEV. 139.5
DATUM Feet Mean Sea Level
INSTALLATION DATE 5/25/93

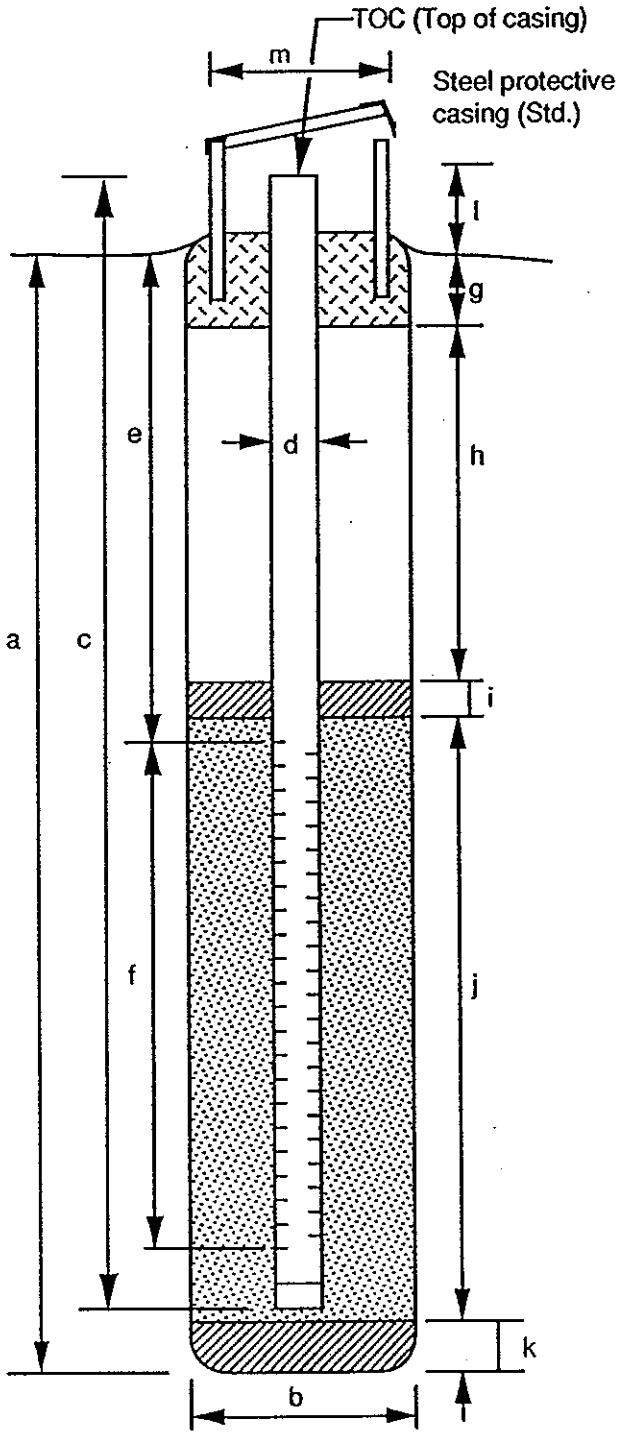

EXPLORATORY BORING

a. Total depth 36.2 ft.
b. Diameter 8 in.
Drilling method Hollow Stem Auger

WELL CONSTRUCTION

c. Total casing length 38.31 ft.
Material Schedule 40 PVC
d. Diameter 2 in.
e. Depth to top perforations 26.3 ft.
f. Perforated length 9.5 ft.
Perforated interval from 26.3 to 35.8 ft.
Perforation type Machine Slotted
Perforation size 0.010 Inches
g. Surface seal 2.0 ft.
Material Concrete
h. Backfill NA ft.
Material NA
i. Seal 20.41 ft.
Material Bentonite Chips
j. Gravel pack 13.75 ft.
Gravel pack interval from 22.4 to 36.2 ft.
Material 10-20 Gradation Sand
k. Bottom seal/fill NA ft.
Material NA
l. Casing stickup 2.81 ft.
m. Protective casing diameter 6.5 in.

Prepared by: Craig Fanshier Reviewed by: Craig R. Fanshier Date: 10/1/93

Ventura Mac-4 Rev. 7/23/91

LOG OF EXPLORATORY BORING

PROJECT NAME Remedial Investigation
LOCATION Riverbend Landfill; McMinnville, Oregon
DRILLED BY GeoTech Explorations
DRILL METHOD Hollow Stem Auger
LOGGED BY Craig D. Fanshier

BORING NO. MW-6A
PAGE 1 OF 2
GROUND ELEV. 126.20'
TOTAL DEPTH 22.50'
DATE COMPLETED 05/24/93

RECOVERY PERCENT	POCKET PENETRO-METER (Tons/SF)	PENETRA-TION (Blows/Ft)	GROUND WATER LEVELS	DEPTH IN FEET	SAMPLES	WELL DETAILS	LITHOLOGIC COLUMN	LITHOLOGIC DESCRIPTION
96								**0 to 15.0 feet: SILTY CLAY (CL)**, light to dark brown with 20-30% strong grayish mottling, some reddish brown mottling; medium plasticity fines, some silt; granular soil peds; no macropores; stiff; damp.
	2							@ 1.5 to 4.5 feet: approximately 50% gray and 50% brown mottled soil.
	2							
	2							
	2							
	1.5							@ 4.0 to 4.5 feet: crushed red bricks.
100								@ 4.5 to 6.0 feet: wet.
				5				
	1							@ 5.5 feet: color changes to dark yellowish brown (10YR 4/4) with 10% light gray mottling.
	2							
	2							@ 7.5 feet: some 1/16-inch macropores.
	1							@ 8.5 to 9.0 feet: approximately 20% gray mottling.
	1.5							
90	2							
	1.5			10				
	1.5							
	1.5							
	1.5							@ 13.0 feet: dark brown (10YR 3/3).
			8/10/93					@ 14.0 to 15.0 feet: color change from the overlying brown to dark olive gray is sharp.
87	2.5	27		15				**15.0 to 22.5 feet: CLAY (CL)**, dark olive gray (5Y 3/2 to a bluish gray (5B 5/1), slight purplish tint; medium to high plasticity fines; 5% 1/32- to 1/4-inch macropores; stiff; moist to wet, free water along soil ped surfaces.
100	2.5		5/24/93					
	1.5							
	1.5							
	15							@ 18.5 feet: no purplish tint; soil slightly firmer.
	15							
100				20				

REMARKS

Drilled w/8" OD (4.25" ID) HSA. Samples continuously collected w/5'-long, 3" ID split barrel and 1.5'-long, 3" OD split spoon fitted w/rings. A 2" PVC monitoring well was constructed in the borehole. Well construction information presented in Well Details. See explanation for definition of symbols.

LOG OF EXPLORATORY BORING

PROJECT NAME **Remedial Investigation**
LOCATION **Riverbend Landfill; McMinnville, Oregon**
DRILLED BY **GeoTech Explorations**
DRILL METHOD **Hollow Stem Auger**
LOGGED BY **Craig D. Fanshier**

BORING NO. **MW-6A**
PAGE **2 OF 2**
GROUND ELEV. **126.20'**
TOTAL DEPTH **22.50'**
DATE COMPLETED **05/24/93**

RECOVERY PERCENT	POCKET PENETRO-METER (Tons/SF)	PENETRA-TION (Blows/Ft)	GROUND WATER LEVELS	DEPTH IN FEET	SAMPLES	WELL DETAILS	LITHOLOGIC COLUMN	LITHOLOGIC DESCRIPTION
								15.0 to 22.5 feet: CLAY (CL), continued. @ 20.5 feet: color changes to olive gray, with very slight purplish tint; soil is crumbly.
								BORING TERMINATED AT 22.5 FEET.
				25				
				30				
				35				
				40				

REMARKS

Drilled w/8" OD (4.25" ID) HSA. Samples continuously collected w/5'-long, 3" ID split barrel and 1.5'-long, 3" OD split spoon fitted w/rings. A 2" PVC monitoring well was constructed in the borehole. Well construction information presented in Well Details. See explanation for definition of symbols.

EMCON NORTHWEST

WELL DETAILS

CLIENT Riverbend Landfill Company, Inc.

PROJECT NUMBER 0258-001.24

PROJECT NAME Remedial Investigation

LOCATION McMinnville, Oregon

WELL PERMIT NO. 52005

BORING / WELL NO. MW-6A

TOP OF CASING ELEV. 128.95

GROUND SURFACE ELEV. 126.2

DATUM Feet-Mean Sea Level

INSTALLATION DATE 5/24/93

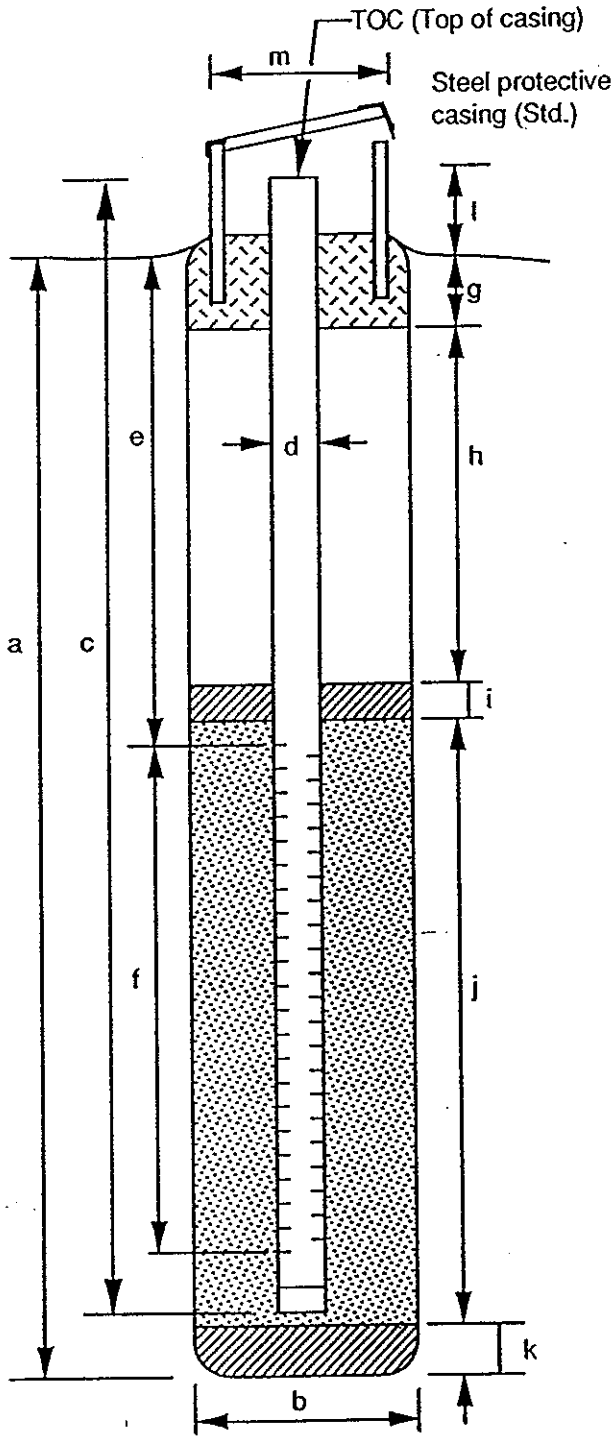

EXPLORATORY BORING

a. Total depth 22.5 ft.

b. Diameter 8 in.

Drilling method Hollow Stem Auger

WELL CONSTRUCTION

c. Total casing length 24.3 ft.

Material Schedule 40 PVC

d. Diameter 2 in.

e. Depth to top perforations 11.8 ft.

f. Perforated length 9.5 ft.

Perforated interval from 11.8 to 21.3 ft.

Perforation type Machine Slotted

Perforation size 0.010 Inches

g. Surface seal (0 to 2.5) 2.5 ft.

Material Concrete

h. Backfill NA ft.

Material NA

i. Seal (2.5 to 8.5) 6.0 ft.

Material Bentonite Chips

j. Gravel pack 14.0 ft.

Gravel pack interval from 8.5 to 22.5 ft.

Material 10-20 Gradation Sand

k. Bottom seal/fill NA ft.

Material NA

l. Casing stickup 2.8 ft.

m. Protective casing diameter 6.5 in.

Prepared by: Craig Fanshier

Reviewed by: Craig D. Fanshier Date: 10/1/93

Rev. 7/23/91

Ventura Mac 4

ATTACHMENT 2

Geophysical Logging Results
(Report by COLOG dated June 27, 2017)

Geophysical Logging Results
Riverbend Landfill
McMinnville, Oregon

Prepared for
SCS Engineers
27 June 2017

Prepared by
COLOG, Inc.
810 Quail Street Suite E, Lakewood, CO, 80215
Phone: (303) 279-0171 Fax: (303) 278-0135

Table of Contents

Introduction

Methodologies
Natural Gamma
EM Induction Resistivity

Interpretation
MW-3A
MW-4A
MW-6A
MW-12A

MW-3A: Geophysical Log Plots

MW-4A: Geophysical Log Plots

MW-6A: Geophysical Log Plots

MW-12A: Geophysical Log Plots

Limitations

Introduction

In accordance with the SERVICE PURCHASE ORDER NO.: 04-10945, dated 10 May 2017, Colog acquired geophysical log data in four wells at the Riverbend Landfill, McMinnville, OR. The objectives of the investigation were to:

1) Evaluate the condition of the well casings
2) Identify lithology surrounding the wells

Natural Gamma and Induction Conductivity logs were successfully acquired in MW-3A, MW-4A, MW-6A, and MW-12A on 25 May, 31 May, and 1 June 201. Full Waveform Sonic logging was attempted, but there was not sufficient fluid in each well to accommodate the long probe and collect valid data. Geophysical logs were acquired with respect to top of casing then shifted to reflect their position relative to ground level. Depths herein from drilling logs and from geophysical logs are with respect to ground level.

Methodology

Natural Gamma Methodology

The natural gamma log (also known as gamma or gamma ray log) provides a measurement recorded in counts per second (CPS), that is proportional to the natural radioactivity of the formation. Actual counts depend upon the detector size and efficiency but are often normalized in API units. 200 API units equal the detector response in a specially constructed physical model designed to simulate the typical shale. For most of Colog's gamma probes, 1 API unit is approximately equal to 1.25 CPS. The depth of investigation for the gamma log is typically 10 to 12 inches. Gamma logs provide formation clay and shale content and general stratigraphic correlation in sedimentary formations. In general, the natural gamma ray activity of clay-bearing sediments is much higher than that of quartz sands and carbonates. Gamma logs are also used in hard rock environments to differentiate between different rock types and in mining applications for assessment of radioactive mineralization such as uranium, potash, etc.

Gamma radiation is measured with scintillation NaI detectors. The gamma-emitting radioisotopes that naturally occur in geologic materials are Potassium40 and nuclides in the Uranium238 and Thorium232 decay series. Potassium40 occurs with all potassium minerals, including potassium feldspars. Uranium238 is typically associated with dark shales and uranium mineralization. Thorium232 is typically associated with biotite, sphene, zircon and other heavy minerals.

The usual interpretation of the gamma log, for hydrogeology applications, is that measured counts are proportional to the quantity of clay minerals present. This assumes that the natural radioisotopes of potassium, uranium, and thorium occur in exchange ions, which are attached to the clay particles. Thus, the correlation is between gamma counts and the cation exchange capacity (CEC). Usually gamma logs show an inverse linear correlation between gamma counts and the average grain size (higher counts indicate smaller grain size, lower counts indicate larger grain size). This relation can become invalid if there are radioisotopes in the mineral grains themselves (immature sandstones or arkose), and if there are differences in the CEC of clay minerals in the different parts of the formation. Both of these situations are possible in many

environments. The former situation would most likely occur in basal conglomerates composed of granitic debris, and the latter where clay occurs as a primary sediment in shale and another as an authigenic mineral deposited in pore spaces during diagenesis.

Calibration of the gamma logging tool is usually performed in large physical models such as the API test pits in Houston, or the DOE uranium calibration test pits. In hydrogeology, however, the gamma measurement is usually a relative log and quantitative calibrations are not routinely performed. The stability and repeatability of the natural gamma measurement is routinely checked with a sleeve of known radioactivity. It is also common to routinely check the gamma log by repeat logging a section of a well. Natural radioactive decay follows a Gaussian distribution; that is, approximately 67% of the radioactive response occurs within ± the square root of the count rate. For instance, if a background radiation of 100 CPS is being measured, there is approximately ± 10 CPS variability.

Fundamental assumptions and limitations inherent in these procedures are as follows:

- The natural gamma ray log, as with all nuclear or radiation logs, have a fundamental advantage over most other logs in that they may be recorded in either cased or open holes that are fluid or air filled. Borehole fluid and casing may attenuate the gamma values.
- Excessive borehole rugosity, often caused by air drilling, may degrade natural gamma ray log.

EM Induction Resistivity

The induction measurement is made by using a magnetic field to induce electric currents in the material being surveyed. Because the magnitude of these electric currents is proportional to the conductivity of the media being measured, the magnetic field generated by the induced electric current is measured.

Induction measurements were made with an MSI model EMP induction probe. This probe is based upon the Geonics EM-39 probe, which is the industry standard for slimline induction tools. The tool is designed to measure formation conductivity in milliSiemens per meter (mS/m) which is converted to resistivity in software.

The induction probe contains a transmitter coil that emits a continuous wave of electromagnetic (EM) signal at 39.2 kHz, which produces a primary field in the formation around the borehole. A secondary field produced by the primary field is proportional to the conductivity of the formation and is sensed at the receiver coil located in the probe 20 inches (50cm) from the transmitter coil. A second coil at 10 inches (25cm) from the transmitter cancels the primary field in the vicinity of the borehole and allows horizontal focusing to reduce or eliminate borehole effects. Empirical evidence demonstrates that there are negligible borehole effects on the response due to borehole diameters less than 9 inches.

This inner radius of investigation (9 inches) and toroidal shape of the induced field makes the EM induction probe an excellent tool for lithologic investigation with little completion induced effects. Maximum depth of investigation is approximately 40 inches. Induction conductivity measured with the EMP gives a resistivity measurement (resistivity = 1/conductivity) which is very similar to a 16-inch short normal resistivity log. Because the measurement is obtained electro-magnetically, it can

be collected through non-conductive (PVC or fiberglass) casing and in the wet or dry portion of the borehole.

Interpretation

MW-3A

The Natural Gamma log from this well indicates relatively high gamma activity from 1.4 to 22 feet. This correlates well with the bentonite chip seal noted from 2.2 to 21 feet on the Well Construction diagram by Emcon Associates. This is a common characteristic of bentonite, and it is reflected in the other wells of this investigation.

The Induction Resistivity log is calculated as the inverse of the Induction Conductivity log. Within this well, the Induction log indicates an overall fining downward as the bound water volume increases, with clayey silt near the top grading to clay at the bottom. Emcon's Boring Log notes traces of fine sand from 8.5 to 10.4 feet, at 20 feet, and from 24 to 26.8 feet. There are slight indications of coarser material (fine sand) on the Induction log at 8, 10.5, and 16.5 feet, though the minor decreases in conductivity would suggest a very low concentration of sand.

MW-4A

The Natural Gamma log from this well indicates relatively high gamma activity from 2.5 to 24.5 feet. This correlates well with the bentonite chip seal noted from 2 to 22.4 feet on the Well Construction diagram by Emcon Associates. This is a common characteristic of bentonite, and it is reflected in the other wells of this investigation. Relative to the other wells in this investigation, this well exhibits unusually high gamma counts through the interval from 1 to 29 feet. If the well construction components for this well were the same as those used for the other wells, we may infer that the elevated natural gamma activity is from the formation.

The Induction Resistivity log is calculated as the inverse of the Induction Conductivity log. Within this well, the Induction log indicates finer material (higher clay content) below 16 feet. Emcon's Boring Log notes traces of fine sand from 9.5 to 12.5 feet. There are slight indications of coarser material (fine sand) on the Induction log at 10, 14, and 22.5 feet, though the minor decreases in conductivity would suggest a very low concentration of sand. There is no anomalous change in the induction to correlate with the change in the natural gamma activity 29 feet, suggesting no change in grain size at this depth.

MW-6A

The Natural Gamma log from this well indicates relatively high gamma activity from 1 to 8.5 feet. This correlates well with the bentonite chip seal noted from 2.5 to 8.5 feet on the Well Construction diagram by Emcon Associates. This is a common characteristic of bentonite, and it is reflected in the other wells of this investigation.

The Induction Resistivity log is calculated as the inverse of the Induction Conductivity log. Within this well, the Induction log indicates finer material (higher clay content) below 12.5 feet. Emcon's Boring Log does not note any traces of sand. However, there is a noticeable indication of coarser material (fine sand) on the Induction log at 8 feet

MW-12A

The Natural Gamma log from this well indicates relatively high gamma activity from 1.5 to 13 feet. This correlates well with the bentonite chip seal noted from 0.5 to 12 feet on the Well Construction diagram by Emcon Associates. This is a common characteristic of bentonite, and it is reflected in the other wells of this investigation.

The Induction Resistivity log is calculated as the inverse of the Induction Conductivity log. Within this well, the Induction log indicates consistent grain size throughout. Emcon's Boring Log notes traces of fine sand at 14 feet and at 20 feet. There is a slight indication of coarser material (fine sand) on the Induction log at 13 feet, though the minor decrease in conductivity would suggest a very low concentration of sand.

Geophysical Summary Plot

COLOG
borehole geophysics / hydrophysics

COMPANY: SCS Engineers	PROJECT: Riverbend Landfill
DATE LOGGED: 1 June 2017	WELL: MW-3A

Colog, Inc.
810 Quail Street, Suite E, Lakewood, CO 80215
Phone: (303) 279-0171, Fax: (303) 278-0135
www.colog.com

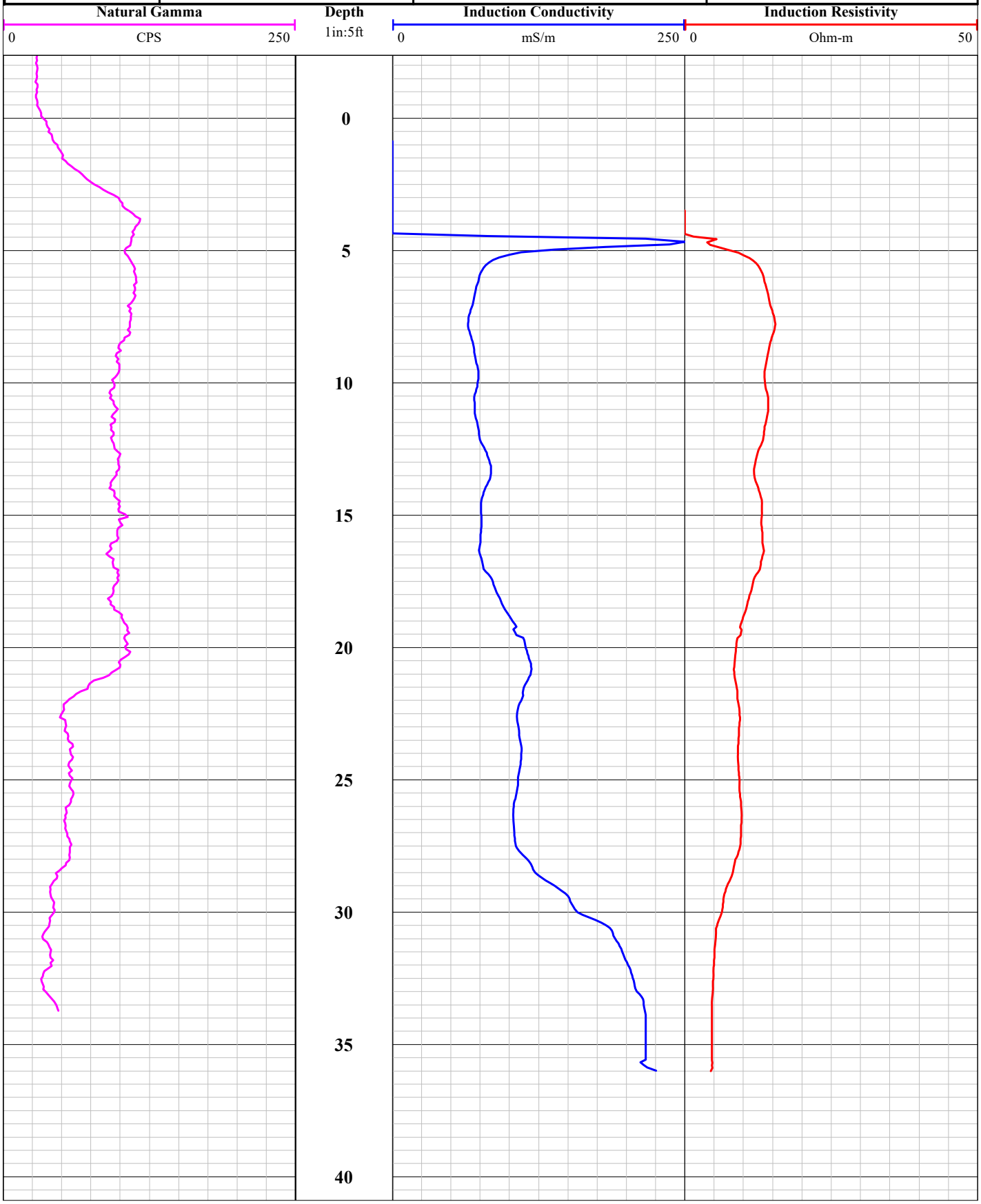

Geophysical Summary Plot

COLOG
borehole geophysics / hydrophysics

COMPANY: SCS Engineers	PROJECT: Riverbend Landfill
DATE LOGGED: 1 June 2017	WELL: MW-4A

Colog, Inc.
810 Quail Street, Suite E, Lakewood, CO 80215
Phone: (303) 279-0171, Fax: (303) 278-0135
www.colog.com

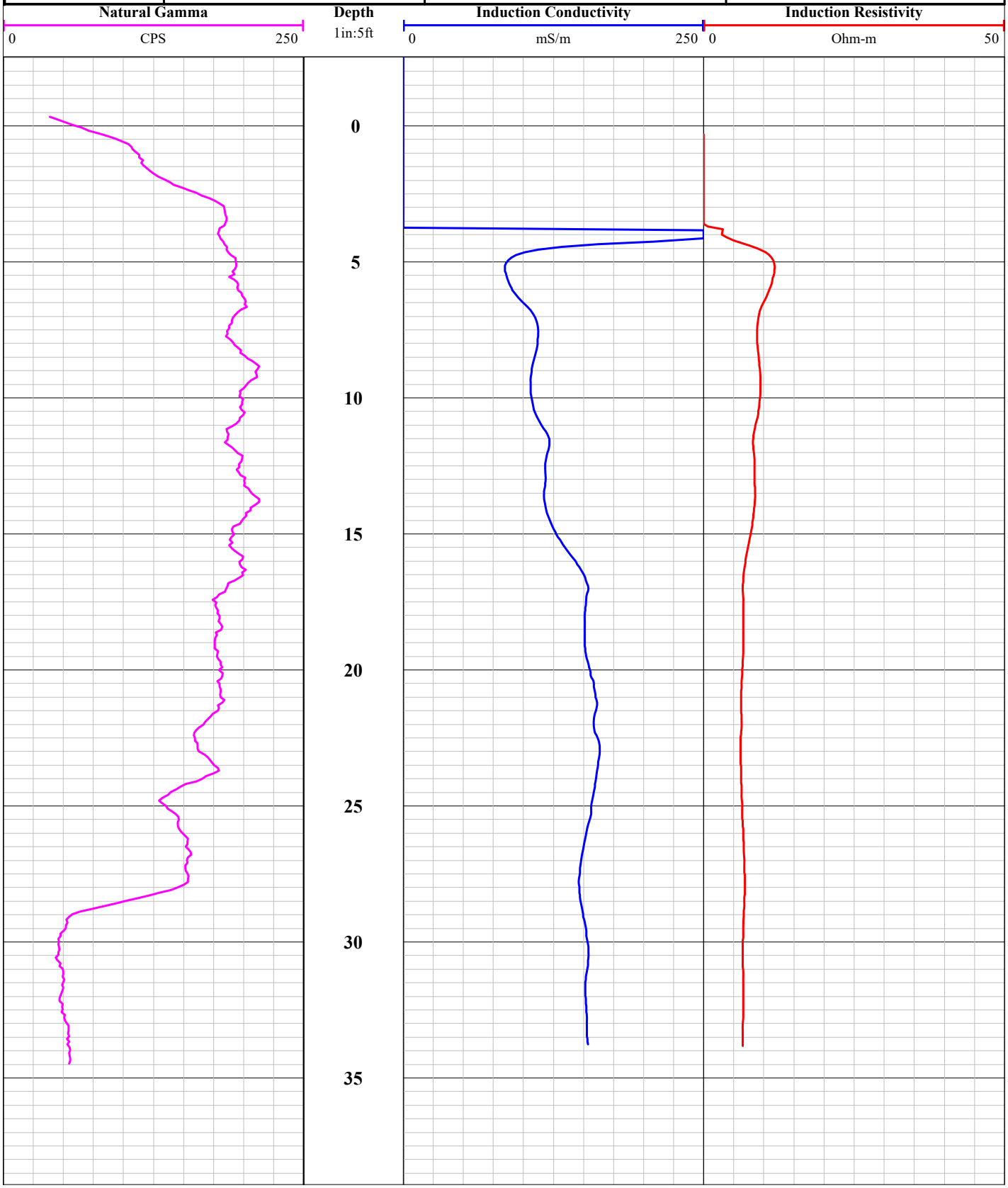

Geophysical Summary Plot

COLOG borehole geophysics / hydrophysics	COMPANY: SCS Engineers	PROJECT: Riverbend Landfill
	DATE LOGGED: 1 June 2017	WELL: MW-6A

Colog, Inc.
810 Quail Street, Suite E, Lakewood, CO 80215
Phone: (303) 279-0171, Fax: (303) 278-0135
www.colog.com

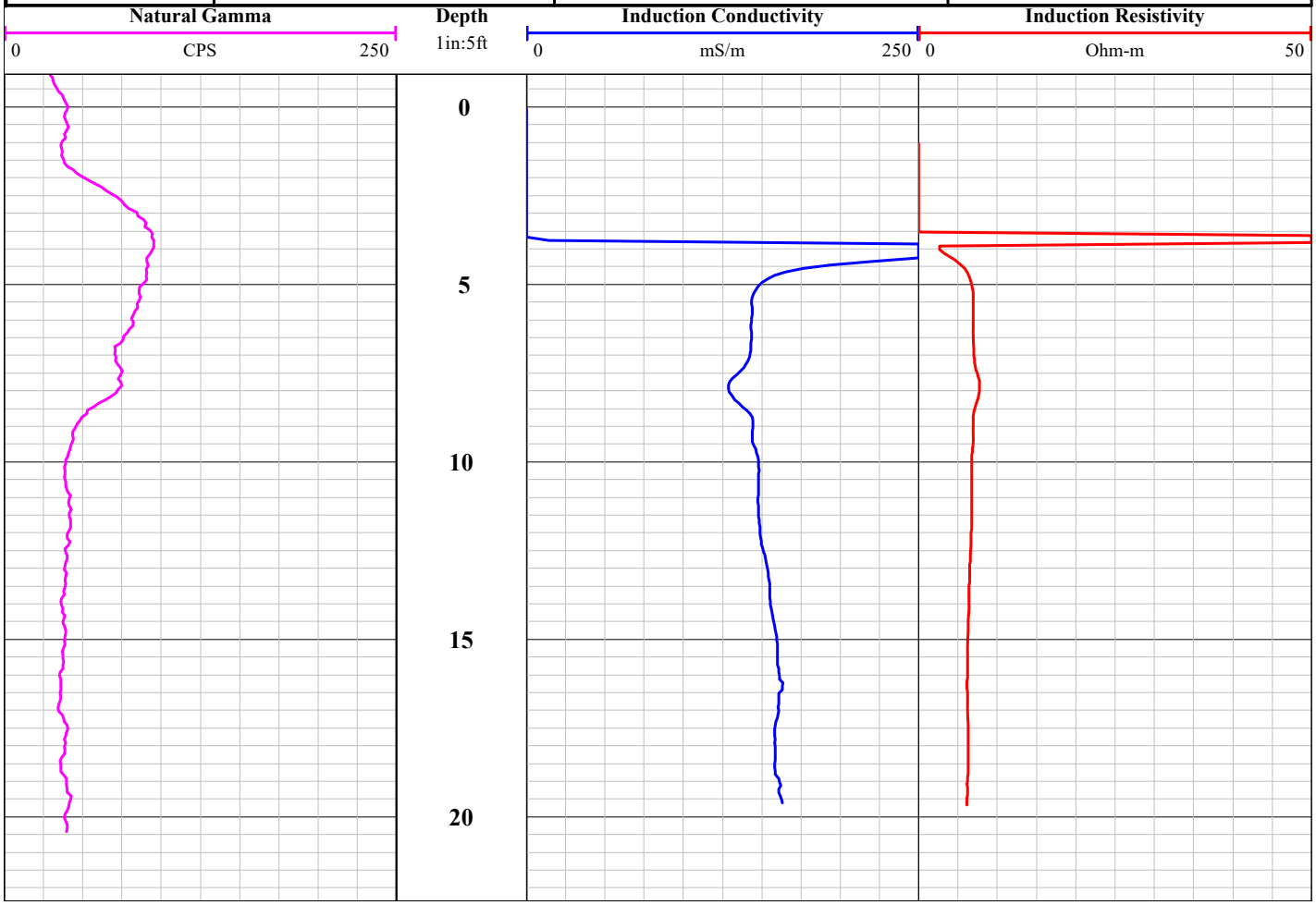

Geophysical Summary Plot

COMPANY: SCS Engineers	PROJECT: Riverbend Landfill
DATE LOGGED: 1 June 2017	WELL: MW-12A

Colog, Inc.
810 Quail Street, Suite E, Lakewood, CO 80215
Phone: (303) 279-0171, Fax: (303) 278-0135
www.colog.com

LIMITATIONS

COLOG's logging was performed in accordance with generally accepted industry practices. COLOG has observed that degree of care and skill generally exercised by others under similar circumstances and conditions. Interpretations of logs or interpretations of test or other data, and any recommendation or hydrogeologic description based upon such interpretations, are opinions based upon inferences from measurements, empirical relationships and assumptions. These inferences and assumptions require engineering judgment, and therefore, are not scientific certainties. As such, other professional engineers or analysts may differ as to their interpretation. Accordingly, COLOG cannot and does not warrant the accuracy, correctness or completeness of any such interpretation, recommendation or hydrogeologic description.

All technical data, evaluations, analysis, reports, and other work products are instruments of COLOG's professional services intended for one-time use on this project. Any reuse of work product by Client for other than the purpose for which they were originally intended will be at Client's sole risk and without liability to COLOG. COLOG makes no warranties, either express or implied. Under no circumstances shall COLOG or its employees be liable for consequential damages.

ATTACHMENT 3

MW-3A, MW-4A, MW-6A, and MW-12A Down-hole Video Logs (including Videos on the attached DVD)

COLOG borehole geophysics / hydrophysics
810 quail street, suite e • lakewood, colorado 80215 • phone 303.279.0171 • fax 303.278.0135

12 June 2017

Jason Davendonis
SCS Engineers
15940 SW 72nd Ave.
Portland, OR 97224

Re: Riverbend Landfill - Video Casing Inspection

Dear Jason,

In accordance with our quotation L5843a, dated 4 May 2017, Colog made a video inspection of four cased wells at the Riverbend Landfill site, near McMinneville, OR. MW-12A was recorded on 24 May and the inspection was witnessed by Tiffany Andrews. You were present for the inspections of MW-3A, MW-4A, and MW-6A, recorded on 25 May.

All of the 2 inch well casing was intact and straight with no cracks or holes. Joints appeared to be tight. The bottom 10 foot joint of each well was slotted screen PVC. PVC above was blank.

Within all four wells, the casing was coated with brown to black material from water level, or slightly below water level, to the bottom of well. The coating in MW-6A became quite dark, and in MW-12A the coating obscured some of the slots. Water was clear in all but the bottom few feet of MW-12A, until the camera touched the bottom and stirred up sediment. The sediment in the bottom of MW-4A released bubbles when the camera was pulled back up. The camera could not proceed past a small piece of polyethylene tubing at the bottom of MW-12A, the top of this tubing was at 24.8 feet below the top of casing. The small piece of tubing was removed after logging was completed.

Please see the scanned field notes for chronologic video observations. Thank you for the opportunity to assist on this project.

Best regards,

Nathan Davis

COLOG borehole geophysics / hydrophysics
810 quail street, suite e • lakewood, colorado 80215 • phone 303.279.0171 • fax 303.278.0315

Borehole Video Log

Company: SCS Eng
Date: 5/25/17
Whitness: J. Davendonis
Well Name: MW-3A
Project: Riverbend Landfill
Casing Diameter: 2"
Casing Material: PVC
Expected Depth: 37.5'
Observed Depth: 38.4'

Footage	Comments
ϕ'	Top of Casing
3'	Staining / Scratches
7.9'	Joint
17.9'	Joint Algae?
18.4'	Water Level - Clear
	Casing Coated w/ brown
28.ϕ'	Joint
	Horizontal Slotted casing
	Black Staining around slots
38.4'	Light touching bottom

COLOG borehole geophysics / hydrophysics
810 quail street, suite e • lakewood, colorado 80215 • phone 303.279.0171 • fax 303.278.0315

Borehole Video Log

Company: SCS Eng
Date: 5/25/17
Whitness: J. Davendonis
Well Name: MW-4A
Project: Riverbend Landfill
Casing Diameter: 2"
Casing Material: PVC
Expected Depth: 38.3'
Observed Depth: 38.6'

Footage	Comments
Ø'	Top of Casing
8.6'	Joint
18.5'	Joint
27.1'	Water Lever - Clear
28.5'	Joint
	Horizontal Slotted Casing
	Slots Clean, Casing Clean
38.6'	Light touching bottom
	Bubbles + turbidity released when lifted
	from the bottom

COLOG borehole geophysics / hydrophysics
810 quail street, suite e • lakewood, colorado 80215 • phone 303.279.0171 • fax 303.278.0315

Borehole Video Log

Company: SCS Eng.
Date: 5/25/17
Whitness: J. Davendonis
Logger: H. York
Well Name: MW-6A
Project: Riverbend Landfill
Casing Diameter: 2"
Casing Material: PVC
Expected Depth: 24.3'
Observed Depth: 24.4'

Footage	Comments
Ø'	Top of Casing (Steel)
1.Ø'	Top of PVC
4.2'	Joint
8.9'	Water Level
	Casing Coated w/ Brown
14.2'	Joint
	Coating very dark
	Horizontal Slotted Casing
	Slots Clean
24.4'	Light Touching Bottom
~24.Ø	Joint

COLOG borehole geophysics / hydrophysics
810 quail street, suite e • lakewood, colorado 80215 • phone 303.279.0171 • fax 303.278.0315

Borehole Video Log

Company: SCS Eng. Date: 5/24/17
Whitness: T. Andrews Logger: H. York
Well Name: MW-12A Project: Riverbend Landfill
Casing Diameter: 2" Casing Material: PVC
Expected Depth: 28.1' Observed Depth: N/A

Footage	Comments
Ø'	Top of Steel Casing
Ø.2'	Top of PVC
~2.9'	Joint
~7.9'	Joint
13.6'	Stain or Coating on One Side
13.8'	Water Level
17.9'	Joint - Horizontal Slotted Casing
	Coating on Full Circumference
	Some Covering Slots
22.2'	Coating Clears Up
24.2'	Slight Turbidity
24.8'	Riser Pipe in the Well (Small White PVC)
	Camera Can't Pass Pipe
	Bottom Not Reached

ATTACHMENT 4

Laboratory Analytical Reports