Buoyancy Calculations

For

TANK MODEL(S): **TW - 900**
TW - 1050
TW - 1250
TW - 1500

INFILTRATOR SYSTEMS INC.

Old Saybrook, Connecticut

STRUCTURAL
REGISTERED PROFESSIONAL
ENGINEER
13076PE
OREGON
MAR. 11, 2003
JOHN REESE LEAVITT
1-8-2009
EXPIRATION DATE: 12-31-2009

Leavitt & Associates Engineers, Inc.
1324 First Street South – Nampa, ID 83651
(208) 463-0333
http://www.leavittengineers.com

Revision #	Prepared by	Certified by	Project #
0	J. Reese Leavitt, P.E./S.E.	J. Reese Leavitt, P.E./S.E.	06215.001

DESIGN CRITERIA:

SOIL WEIGHT: **110 PCF**
WEIGHT OF WATER: **62.4 PCF = 8.34 POUNDS / GALLON**

TABLE OF CONTENTS:

Tank Calculation(S): **Model(s):** **TW-900**
TW-1050
TW-1250
TW-1500

APPENDIX:

OREGON TW-SERIES TANK BUOYANCY MEASURES, SHEET 1 OF 1

LEAVITT & ASSOCIATES ENGINEERS
1324 First Street South
Nampa, ID 83651
(208) 463-7670 Phone
(208) 463-9040 Fax
www.leavittengineers.com

CLIENT: Infiltrator Systems Inc.
JOB: TW-Tank Series
DESCRIPTION: Buoyancy Calculations
DESIGNER:
DATE:
FILE:

Buoyancy Calculations: ISI Tank Model TW-900 Tank

Model TW-900 Gallon Septic Tank

LENGTH	=	9.20	Feet
WIDTH	=	5.50	Feet
HEIGHT	=	4.22	Feet
TOTAL CAPACITY	=	1055	Gallons
WEIGHT	=	378	Pounds
2 RISERS - VOLUME	=	25	Gallons
1 RISER - AREA	=	3.14	Square feet

Soil and Ground Water Conditions:

Minimum Height of Fill over Tank	=	0.50	Feet
Ground Water Depth	=	Tank submersed in water	

Concrete collar:

LENGTH	=	11.20	Feet
WIDTH	=	7.50	Feet
THICKNESS	=	1.00	Feet

Tank and Riser Buoyancy:

1055.00	Gallons	x 8.34 Pounds / Gallon	=	8799	Pounds
25.00	Gallons	x 8.34 Pounds / Gallon	=	209	Pounds

Weight of soil over tank:

5.50	Feet x	9.20	Feet x	0.50	Feet x	110	Pounds per Cubic Foot				
					=	2783	Pounds				
3.14	Sq Ft x	0.50	Feet x	2	Risers x	110	Pounds per Cubic Foot				
					=	-345	Pounds				

Weight of soil over concrete collar:

(	11.20	Feet x	7.50	Feet) - (	9.20	Feet x	5.50	Feet) x	1.61	Feet x	
							110	Pounds per Cubic Foot			
						=	5915	Pounds			

Weight of concrete collar:

(	11.20	Feet x	7.50	Feet) - (	9.20	Feet x	5.50	Feet) x	1.00	Feet x	
							150	Pounds per Cubic Foot			
						=	5010	Pounds			

Weight of soil + Tank + Concrete collar:

8353 lbs + 378 lbs + 5010 lbs = 13741 Pounds

Factor of Safety against tank floating:

13741 Pounds > 9007 Pounds

Factor of Safety = **1.53**

LEAVITT & ASSOCIATES ENGINEERS
1324 First Street South
Nampa, ID 83651
(208) 463-7670 Phone
(208) 463-9040 Fax
www.leavittengineers.com

CLIENT: Infiltrator Systems Inc.
JOB: TW-Series Tanks
DESCRIPTION: Buoyancy Calculations
DESIGNER:
DATE:
FILE:

Buoyancy Calculations: ISI Tank Model TW-1050 Tank

Model TW-1050 Gallon Septic Tank

LENGTH	=	10.31	Feet
WIDTH	=	5.50	Feet
HEIGHT	=	4.25	Feet
TOTAL CAPACITY	=	1212	Gallons
WEIGHT	=	410	Pounds
2 RISERS - VOLUME	=	25	Gallons
1 RISER - AREA	=	3.14	Square feet

Soil and Ground Water Conditions:

Minimum Height of Fill over Tank	=	0.50	Feet
Ground Water Depth	=	Tank submersed in water	

Concrete collar:

LENGTH	=	12.30	Feet
WIDTH	=	7.50	Feet
THICKNESS	=	1.00	Feet

Tank Buoyancy:

1212.00	Gallons	x 8.34 Pounds / Gallon	=	10108	Pounds
25.00	Gallons	x 8.34 Pounds / Gallon	=	209	Pounds

Weight of soil over tank:

5.50	Feet x	10.31	Feet x	0.50	Feet x	110	Pounds per Cubic Foot				
					=	3119	Pounds				
3.14	Sq Ft x	0.50	Feet x	2	Risers x	110	Pounds per Cubic Foot				
					=	-345	Pounds				

Weight of soil over concrete collar:

(12.30	Feet x	7.50	Feet) - (	10.31	Feet x	5.50	Feet) x	1.61	Feet x		
						110	Pounds per Cubic Foot				
					=	6295	Pounds				

Minimum weight of soil within Corrugations: = 3400 Pounds

Weight of concrete collar:

(12.30	Feet x	7.50	Feet) - (	10.31	Feet x	5.50	Feet) x	1.00	Feet x		
						150	Pounds per Cubic Foot				
					=	5332	Pounds				

Weight of soil + Tank + Concrete collar:

12468 lbs + 410 lbs + 5332 lbs = 18210 Pounds

Factor of Safety against tank floating:

18210 Pounds > 10317 Pounds

Factor of Safety = **1.77**

LEAVITT & ASSOCIATES ENGINEERS
1324 First Street South
Nampa, ID 83651
(208) 463-7670 Phone
(208) 463-9040 Fax
www.leavittengineers.com

CLIENT: Infiltrator Systems Inc.
JOB: TW-Series Tanks
DESCRIPTION: Buoyancy Calculations
DESIGNER:
DATE:
FILE:

Buoyancy Calculations: ISI Tank Model TW-1250 Tank

Model TW-1250 Gallon Septic Tank

LENGTH	=	12.00	Feet
WIDTH	=	5.50	Feet
HEIGHT	=	4.25	Feet
TOTAL CAPACITY	=	1448	Gallons
WEIGHT	=	490	Pounds
2 RISERS - VOLUME	=	25	Gallons
1 RISER - AREA	=	3.14	Square feet

Soil and Ground Water Conditions:

Minimum Height of Fill over Tank	=	0.50	Feet
Ground Water Depth	=	Tank submersed in water	

Concrete collar:

LENGTH	=	14.00	Feet
WIDTH	=	7.50	Feet
THICKNESS	=	1.00	Feet

Tank Buoyancy:

1448.00	Gallons	x 8.34 Pounds / Gallon	=	12076	Pounds
25.00	Gallons	x 8.34 Pounds / Gallon	=	209	Pounds

Weight of soil over tank:

5.50	Feet x	12.00	Feet x	0.50	Feet x	110	Pounds per Cubic Foot			
					=	3630	Pounds			
3.14	Sq Ft x	0.50	Feet x	2	Risers x	110	Pounds per Cubic Foot			
					=	-345	Pounds			

Weight of soil over concrete collar:

(14.00	Feet x	7.50	Feet) - (	12.00	Feet x	5.50	Feet) x	1.61	Feet x	
						110	Pounds per Cubic Foot			
					=	6907	Pounds			

Minimum weight of soil within Corrugations: = 3400 Pounds

Weight of concrete collar:

(14.00	Feet x	7.50	Feet) - (	12.00	Feet x	5.50	Feet) x	1.00	Feet x	
						150	Pounds per Cubic Foot			
					=	5850	Pounds			

Weight of soil + Tank + Concrete collar:

13592 lbs + 490 lbs + 5850 lbs = 19932 Pounds

Factor of Safety against tank floating:

19932 Pounds > 12285 Pounds

Factor of Safety = **1.62**

LEAVITT & ASSOCIATES ENGINEERS
1324 First Street South
Nampa, ID 83651
(208) 463-7670 Phone
(208) 463-9040 Fax
www.leavittengineers.com

CLIENT: Infiltrator Systems Inc.
JOB: TW-Series Tanks
DESCRIPTION: Buoyancy Calculations
DESIGNER:
DATE:
FILE:

Buoyancy Calculations: ISI Tank Model TW-1500 Tank

Model TW-1500 Gallon Septic Tank

LENGTH	=	14.20	Feet
WIDTH	=	5.50	Feet
HEIGHT	=	4.25	Feet
TOTAL CAPACITY	=	1762	Gallons
WEIGHT	=	581	Pounds
2 RISERS - VOLUME	=	25	Gallons
1 RISER - AREA	=	3.14	Square feet

Soil and Ground Water Conditions:

Minimum Height of Fill over Tank	=	0.50	Feet
Ground Water Depth	=	Tank submersed in water	

Concrete collar:

LENGTH	=	16.20	Feet
WIDTH	=	7.50	Feet
THICKNESS	=	1.00	Feet

Tank Buoyancy:

1762.00	Gallons	x 8.34 Pounds / Gallon	=	14695	Pounds
25.00	Gallons	x 8.34 Pounds / Gallon	=	209	Pounds

Weight of soil over tank:

5.50	Feet x	14.20	Feet x	0.50	Feet x	110	Pounds per Cubic Foot				
					=	4296	Pounds				
3.14	Sq Ft x	0.50	Feet x	2	Risers x	110	Pounds per Cubic Foot				
					=	-345	Pounds				

Weight of soil over concrete collar:

(	16.20	Feet x	7.50	Feet) - (	14.20	Feet x	5.50	Feet) x	1.61	Feet x	
							110	Pounds per Cubic Foot			
						=	7686	Pounds			

Minimum weight of soil within Corrugations: = 3400 Pounds

Weight of concrete collar:

(	16.20	Feet x	7.50	Feet) - (	14.20	Feet x	5.50	Feet) x	1.00	Feet x	
							150	Pounds per Cubic Foot			
						=	6510	Pounds			

Weight of soil + Tank + Concrete collar:

15036 lbs + 581 lbs + 6510 lbs = 22127 Pounds

Factor of Safety against tank floating:

22127 Pounds > 14904 Pounds

Factor of Safety = **1.48**

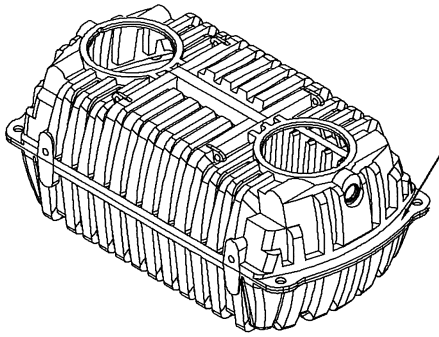

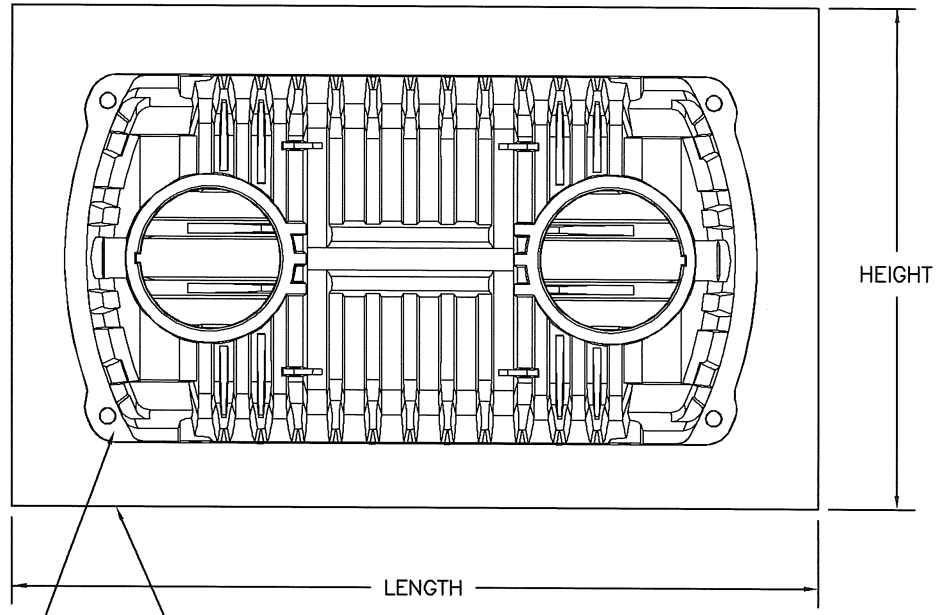

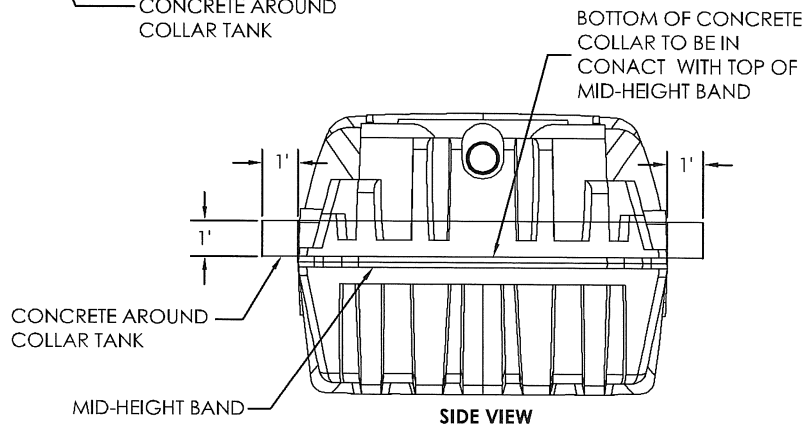

SIDE VIEW

CONRETE COLLAR SIZE SPECIFICATIONS

TANK MODEL	TW-900	TW-1050	TW-1250	TW-1500
WIDTH(FEET)	11'-3"	12'-4"	14'-0"	16'-3"
LENGTH(FEET)	7'-6"	7'-6"	7'-6"	7'-6"
FACTOR-OF-SAFETY AGAINST FLOATING	1.53	1.77	1.62	1.48

NOTES:

1. SEE INFILTRATOR SYSTEMS INC. BUOYANCY CALCULATIONS FOR GROUNDWATER TABLE CONDITION THAT REQUIRES BUOYANCY CONTROLS FOR THE TW-900, TW-1050, TW-1250, and W-1500 TANKS.
2. THE MINIMUM COMPRESSIVE STRENGTH OF CONCRETE SHALL BE 3,000 PSI AT 28 DAYS WITH A MINIMUM OF 6% ENTRAINED AIR.
3. CONCRETE SHALL BE COVERED WITH A MINIMUM OF 1.5 FEET OF SOIL
4. AT 1.5 FEET OF SOIL COVER OVER THE TOP OF THE CONCRETE COLLAR, THE INSTALLATION OF REINFORCING STEEL IS OPTIONAL.
5. THE BOTTOM OF THE CONCRETE COLLAR ELEVATION SHALL COINCIDE WITH THE TOP OF THE MID-HEIGHT FLANGE ELEVATION. MID-HEIGHT FLANGES ARE LOCATED AT EACH END OF THE TANK.
6. CONCRETE SHALL BE CAST IN CONTACT WITH THE EXTERIOR TANK SURFACE TO ALLOW FOR INTERLOCKING WITH THE RIBS.

INFILTRATOR®
septic tanks

INFILTRATOR SYSTEMS INC.
6 Business Park Rd. Old Saybrook, CT 06475
(800) 221-4436

OREGON TW-SERIES TANK
BUOYANCY MEASURES

Drawn by: R.D.	DWG NO. 1	Date: 12-18-08
SCALE Not to Scale	Checked by: EPK	SHEET 1 of 1

Q:TECH RES NEW/PRODUCTS/TANK/OR/OR Drwgs_no ISI lid 121808/BUOYANCY MEASURES