REGISTERED PROFESSIONAL ENGINEER 13076PE OREGON SEPT. 19, 1985 JOHN REESE LEAVITT

DEC 1 0 2007

EXPIRATION DATE: 12-31-2008

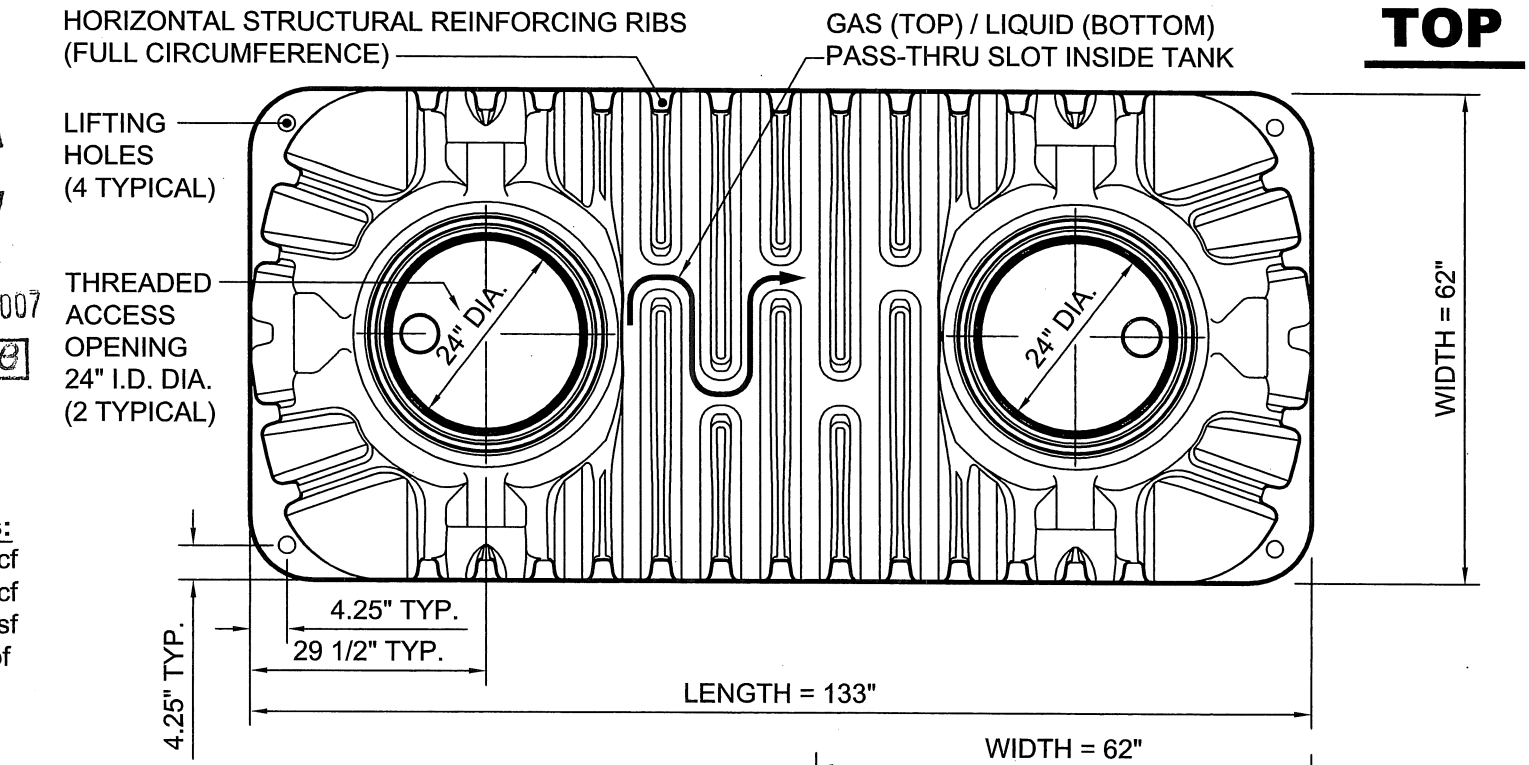

Structural Design Loads:

Hydraulic	-	62.5	pcf
Hydrostatic	-	62.5	pcf
Earth	-	330	psf
Traffic	-	2,500	lbf

w/ 3' of cover

Tank **is not** Traffic Rated

SEE THE INSTALLATION PROCEDURES AND DETAILS FOR EXCAVATION, BEDDING, INSTALLATION, BACKFILLING, AND TESTING OUTLINED IN THE FOLLOWING PUBLICATIONS WHICH ARE PROVIDED WITH EACH TANK INSTALLATION:

* INSTALLATION NOTES (WWW.FRALO.NET/TECH/INSTALLATION/INSTALLATIONNOTES.PDF)
* TANK AND RISER INSTALLATION INSTRUCTIONS(WWW.FRALO.NET/TECH/INSTALLATION/INSTRUCTIONS LETTER.PDF)

FOR ADDITIONAL TRAINING SEE THE SEMINARS OFFERED ON FRALO PLASTECH MANUFACTURING, LLC'S WEBSITE (WWW.FRALO.NET):

* GENERAL INSTALATION SEMINAR (WWW.FRALO.NET/TECH/INSTALLATION/GENERAL SEMINAR.PDF)
* RISER SEALING SEMINAR (WW.FRALO.NET/TECH/INSTALLATION/GASHET SEMINAR.PDF)

A WATER TIGHT TEST IS REQUIRED (OAR 340-0730025(3)).

PLAN APPROVED

Date 1-3-08 Signed AW

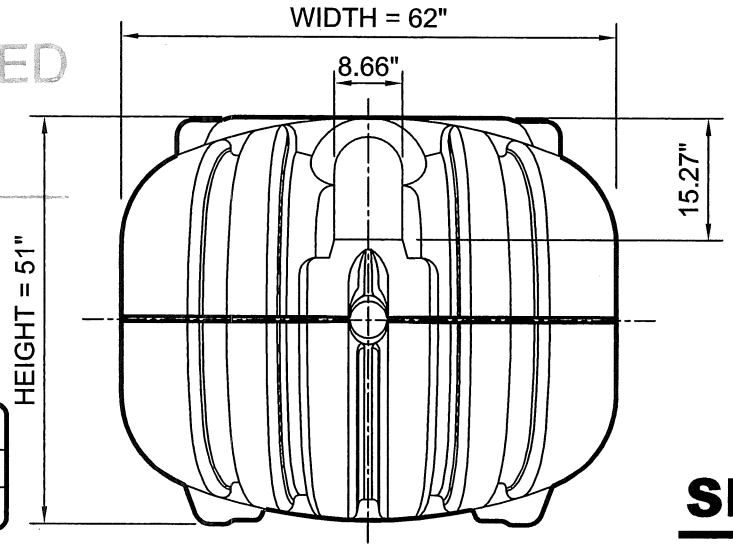

SEPTIC TANK SPECS

OPERATING GALLONS		TOTAL CAPACITY			WEIGHT
GALLONS	LITERS	GALLONS	GALLONS/INCH	LITERS	POUNDS
1177	4455	1337	30	5060	520

DWG SCALE: 1:1
PLOT SCALE: 1:2
SHEET #: 1 OF 3

OREGON - SEPTECH™ TANK - GRAVITY SINGLE 1060 GALLON / MODEL ST-1060

THE NEXT GENERATION OF ONSITE WASTEWATER PRODUCTS

FRALO Plastech

FRALO PLASTECH
One General Motors Drive
Syracuse N.Y. 13206
Call Toll Free 866.943.7256
www.fralo.net

Fittings: PVC ASTM D3034 or ABS ASTM 2680
Gaskets: ASTM 564 Rubber Grommet Seals

ELEVATION

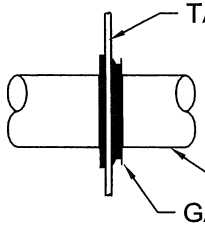

WATER TIGHT PIPE CONNECTIONS DETAIL
NOTE: USE FOR INLET, OUTLET, OUTLET PIPING, AND ELECTRICAL PENETRATIONS

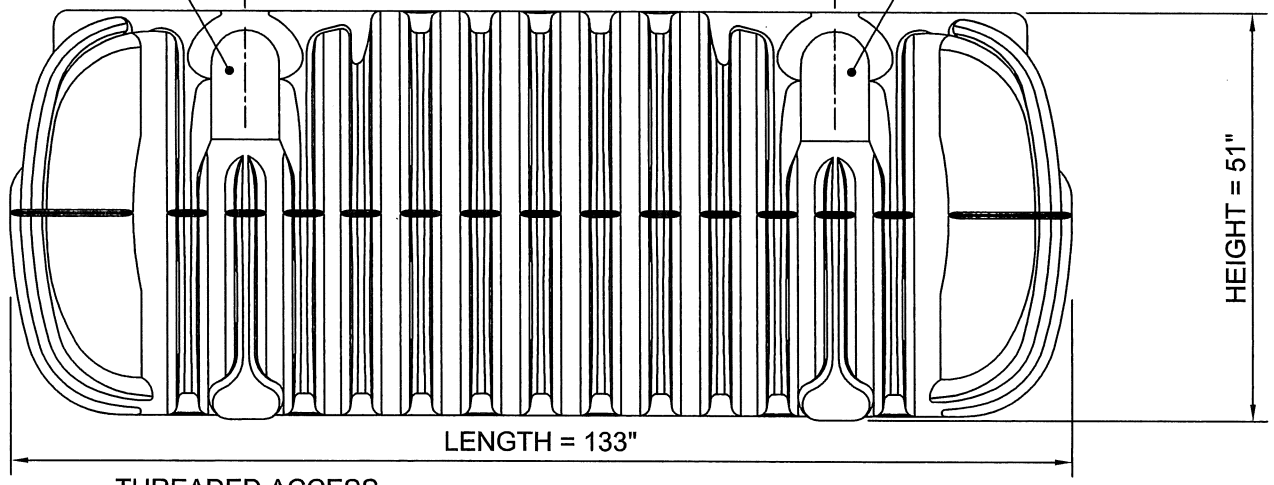

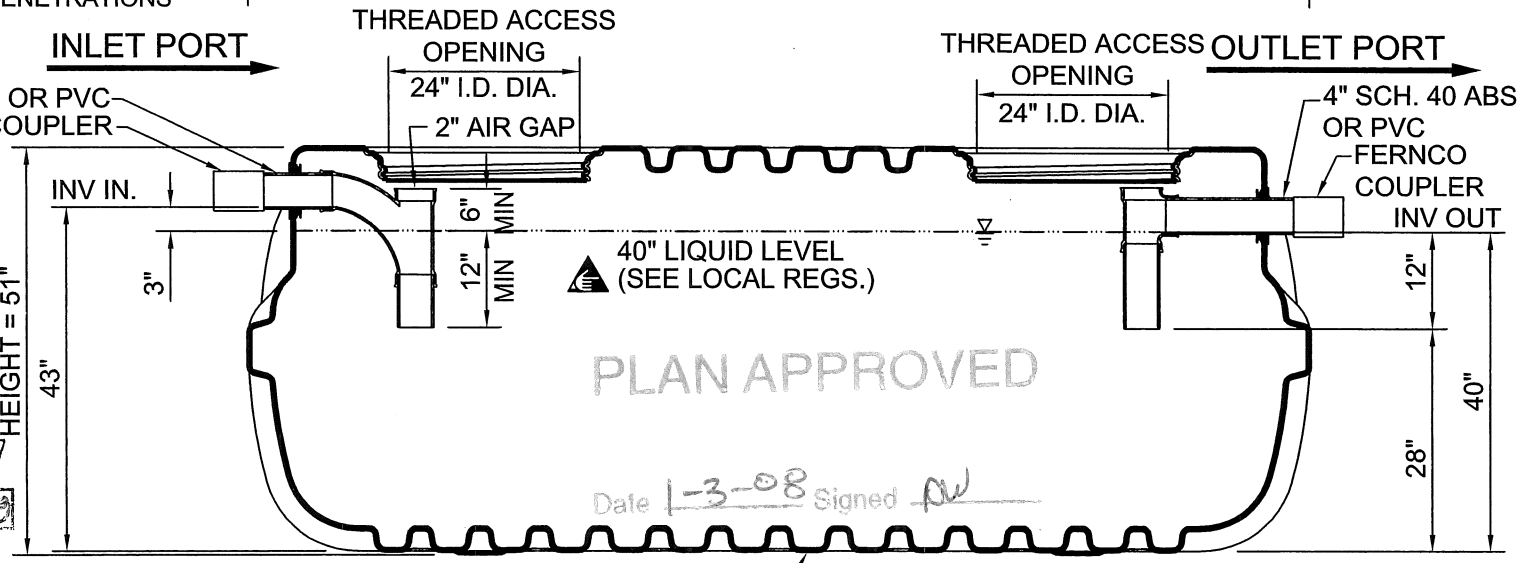

REGISTERED PROFESSIONAL ENGINEER 13076PE OREGON SEPT. 19, 1985 JOHN REGGIE LEAVITT
DEC 10 2007
EXPIRATION DATE: 12-31-2008

40" LIQUID LEVEL HORIZONTAL STRUCTURAL REINFORCING RIBS (FULL CIRCUMFERENCE)

SECTION

DWG SCALE: 1:1	
PLOT SCALE: 1:2	
SHEET #: 2 OF 3	

OREGON - SEPTECH™ TANK - GRAVITY SINGLE 1060 GALLON / MODEL ST-1060

THE NEXT GENERATION OF ONSITE WASTEWATER PRODUCTS

FRALO Plastech

FRALO PLASTECH
One General Motors Drive
Syracuse N.Y. 13206
Call Toll Free 866.943.7256
www.fralo.net

ISOMETRIC

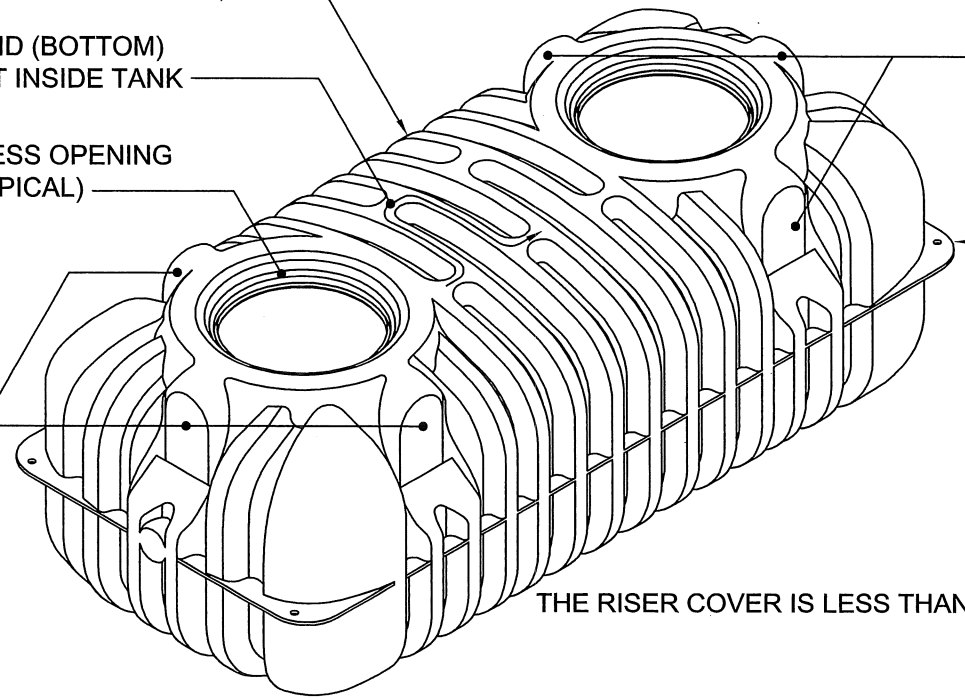

REGISTERED PROFESSIONAL ENGINEER 13076PE OREGON SEPT. 19, 1985 JOHN REESE LEAVITT

DEC 1 0 2007

EXPIRATION DATE: 12-31-2008

PLAN APPROVED

Date 1-3-08 Signed PW

THE RISER COVER IS LESS THAN 75 POUNDS.

WARNING

SEPTIC TANK NOTES

1. Access at or above grade level must be secured against unauthorized access.
2. Tank is not rated for vehicular traffic loading. A 2500 lb wheel load minimum capacity.
3. All resin used is compliant with ASTM D 1248 as required by CSA B66 and IAPMO PS 1-2004e1.
4. Tank material of construction is HMW-HDPE.
5. Primary dimensions are in inches
6. Minimum tank wall thickness is 1/4".
7. Labeling will include: manufacturer name, liquid capacity, date, maximum burial depth, and model number.
8. Riser cover contains the following: 6" x 3" warning:
   "Danger - Do not enter - Poison Gas" - written in English, French & Spanish.
9. Maximum burial depth is 36".
10. Models ST-750, ST-1060, ST-1250 and ST-1500 are all certified to CSA and IAPMO standards.
11. Models ST-500, ST-900 and ST-1000E are compliant with CSA and IAPMO standards.

NOTES

DWG SCALE: 1:1	
PLOT SCALE: 1:2	
SHEET #: 3 OF 3	

OREGON - SEPTECH™ TANK - GRAVITY SINGLE
1060 GALLON / MODEL ST-1060
THE NEXT GENERATION OF ONSITE WASTEWATER PRODUCTS

FRALO Plastech

FRALO PLASTECH
One General Motors Drive
Syracuse N.Y. 13206
Call Toll Free 866.943.7256
www.fralo.net

SEE INSTALLATION INSTRUCTIONS FOR ADDITIONAL DIRECTIONS

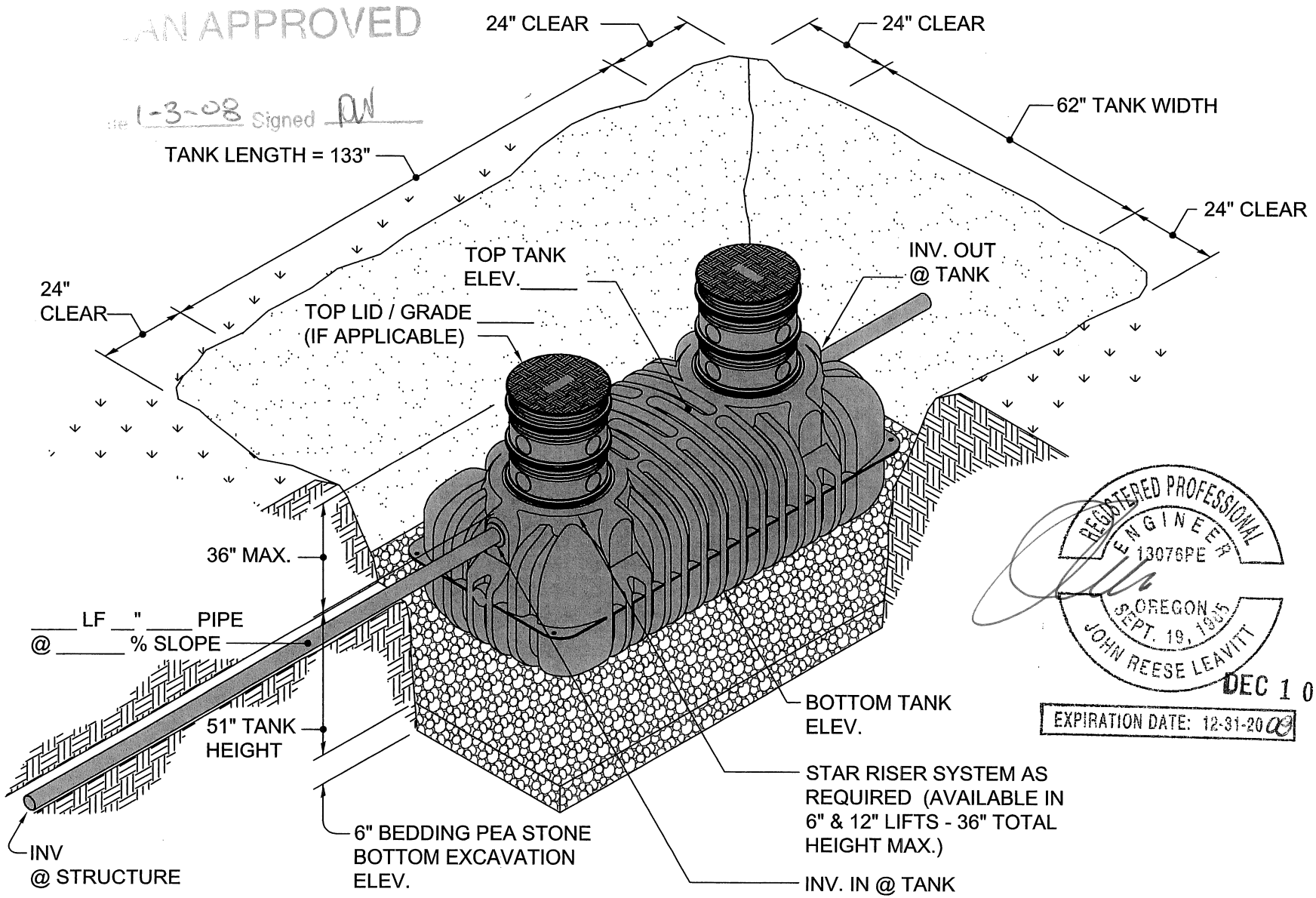

AN APPROVED
Date 1-3-08 Signed DW

REGISTERED PROFESSIONAL ENGINEER 13076PE OREGON SEPT. 19, 1995 JOHN REESE LEAVITT
DEC 1 0 200
EXPIRATION DATE: 12-31-2008

DWG SCALE: NTS	**OREGON - SEPTECH™ TANK - GRAVITY SINGLE 1060 GALLON / MODEL ST-1060**
PLOT SCALE: 1:2	**THE NEXT GENERATION OF ONSITE WASTEWATER PRODUCTS**
SHEET #: 1 OF 1	

FRALO Plastech

FRALO PLASTECH
One General Motors Drive
Syracuse N.Y. 13206
Call Toll Free 866.943.7256
www.fralo.net