# Source Test Report for 2023 Emission Factor Testing
# Mobile Air Curtain Incinerator
# Valley Environmental
# Hillsboro, Oregon

**Prepared For:**

**Oregon Department of Environmental Quality**
**700 NE Multnomah St, Ste 600**
**Portland, OR 97232-4100**

**Prepared By:**

**Montrose Air Quality Services, LLC**
**13585 NE Whitaker Way**
**Portland, OR 97230**

**Document Number: W006AS-021372-RT-2857**
**Test Dates: May 23-25, 2023**
**Submittal Date: September 11, 2023**

MONTROSE AIR QUALITY SERVICES

STAC STACK TESTING ACCREDITATION COUNCIL

ACCREDITED TO ASTM D7036 ONLY CERT #3925.01

# Review and Certification

All work, calculations, and other activities and tasks performed and presented in this document were carried out by me or under my direction and supervision. I hereby certify that, to the best of my knowledge, Montrose operated in conformance with the requirements of the Montrose Quality Management System and ASTM D7036-04 during this test project.

| | | | |
|---|---|---|---|
| **Signature:** |  | **Date:** | 09 / 07 / 2023 |
| **Name:** | Sebastian Wolfendale | **Title:** | Client Project Manager |

I have reviewed, technically and editorially, details, calculations, results, conclusions, and other appropriate written materials contained herein. I hereby certify that, to the best of my knowledge, the presented material is authentic, accurate, and conforms to the requirements of the Montrose Quality Management System and ASTM D7036-04.

| | | | |
|---|---|---|---|
| **Signature:** | Andy Vella | **Date:** | 09 / 07 / 2023 |
| **Name:** | Andy Vella | **Title:** | Senior Reporting/QC Specialist |

# Table of Contents

**Section** **Page**


1.0 Introduction ..... 6
1.1 Summary of Test Program ..... 6
1.2 Key Personnel ..... 11
2.0 Plant and Sampling Location Descriptions ..... 13
2.1 Process Description, Operation, and Control Equipment ..... 13
2.2 Flue Gas Sampling Locations ..... 13
2.3 Operating Conditions and Process Data ..... 13
3.0 Sampling and Analytical Procedures ..... 15
3.1 Test Methods ..... 15
3.1.1 EPA Method 1 ..... 15
3.1.2 EPA Method 2 ..... 15
3.1.3 EPA Method ALT-011 ..... 16
3.1.4 EPA Method 4 ..... 16
3.1.5 EPA Methods 3A, 6C, 7E, and 10 ..... 16
3.1.6 EPA Method 25A ..... 18
3.1.7 ODEQ Method 5 ..... 19
3.1.8 EPA Method 29 ..... 20
3.1.9 EPA SW-846 Method 0010 ..... 21
3.1.10 EPA Method TO-15 ..... 23
3.1.11 EPA Method 23 ..... 25
3.1.12 NCASI Method IM/CAN/WP-99.02 ..... 26
3.1.13 EPA Method 19 ..... 27
3.1.14 ASTM D3172 and ASTM D3176 ..... 28
3.1.15 ASTM D5373, ASTM D3173-03, and ASTM D3302-07ae1, Grind ..... 28
3.2 Process Test Methods ..... 28
4.0 Test Discussion and Results ..... 29
4.1 Field Test Deviations and Exceptions ..... 29
4.2 Presentation of Results ..... 29
5.0 Internal QA/QC Activities ..... 46
5.1 QA/QC Audits ..... 47
5.2 QA/QC Discussion ..... 47
5.3 Quality Statement ..... 48


# List of Appendices


A Field Data and Calculations ..... 49
A.1 Sampling Locations ..... 50

A.2 ODEQ 5 Data Sheets ..... 53
A.3 EPA Method 23 Data Sheets ..... 61
A.4 EPA SW 846 Method 0010 Data Sheets ..... 66
A.5 EPA Method 29 Data Sheets ..... 70
A.6 NCASI 99.02 Data Sheets ..... 76
A.7 EPA Method TO-15 Data Sheets ..... 81
A.8 Instrumental Test Method Data ..... 84
A.9 PM Calculations/Results ..... 135
A.10 PCDD/PCDF Calculations/Results ..... 138
A.11 PAH Calculations/Results ..... 142
A.12 Metals Calculations/Results ..... 146
A.13 HAPs Calculations/Results ..... 162
A.14 TO-15 Calculations/Results ..... 166
A.15 CO, NOx, $SO_2$, NMHC Calculations/Results ..... 168
A.16 Example Calculations ..... 173
A.17 General Equations ..... 191
B Facility Process Data ..... 197
C Laboratory Analysis Data ..... 202
C.1 PM & Metals Analyses ..... 203
C.2 PCDD/PCDF Analyses ..... 243
C.3 PAH Analyses ..... 265
C.4 NCASI Analyses ..... 290
C.5 EPA Method TO-15/8260B Analyses ..... 316
C.6 Fuel & Biochar Sample Results ..... 342
D Quality Assurance/Quality Control ..... 353
D.1 Units and Abbreviations ..... 354
D.2 Manual Test Method QA/QC Data ..... 362
D.3 Instrumental Test Method QA/QC Data ..... 384
D.4 Accreditation Information/Certifications ..... 424
D.5 Quality Assurance Program Summary and Equipment Calibration Schedule ..... 435
E Regulatory Information ..... 440
E.1 Regulatory Correspondence ..... 441
E.2 Permit Excerpts ..... 481

## List of Tables

Table 1-1 Summary of Test Program ..... 6-7
Table 1-2 Summary of Average Results – Air Curtain Incinerator ..... 8
Table 1-3 Summary of Average Results – Air Curtain Incinerator ..... 9

Table 1-4 Summary of Average Results – Air Curtain Incinerator ..... 10
Table 1-5 Test Personnel and Observers ..... 12
Table 2-1 Sampling Locations ..... 13
Table 4-1 $SO_2$, $NO_x$, and CO Emissions Results - Air Curtain Incinerator ..... 30
Table 4-2 $SO_2$, $NO_x$, and CO Emissions Results - Air Curtain Incinerator ..... 31
Table 4-3 VOC Emissions Results - Air Curtain Incinerator ..... 32
Table 4-4 VOC Emissions Results - Air Curtain Incinerator ..... 33
Table 4-5 PM Emissions Results - Air Curtain Incinerator ..... 34
Table 4-6 Trichloroethene and Vinyl Acetate Results - Air Curtain Incinerator ..... 35
Table 4-7 Dioxin/Furan Emissions Results - Air Curtain Incinerator ..... 36
Table 4-8 HAPs Emissions Results - Air Curtain Incinerator ..... 37
Table 4-9 Metals Emissions Results - Air Curtain Incinerator ..... 38
Table 4-10 PAH Emissions Results - Air Curtain Incinerator ..... 42

## List of Figures

Figure 3-1 EPA Methods 3A ($O_2$/$CO_2$), 6C, 7E, 10, and 25A Sampling Train ..... 18
Figure 3-2 ODEQ Method 5 Sampling Train ..... 20
Figure 3-3 EPA Method 29 (Hg) Sampling Train ..... 21
Figure 3-4 EPA SW-846 Method 0010 Sampling Train ..... 23
Figure 3-5 EPA TO-15 Sampling Train ..... 25
Figure 3-6 EPA Method 23 Sampling Train ..... 26
Figure 3-7 NCASI 99.02 Sampling Train ..... 27

# 1.0 Introduction

## 1.1 Summary of Test Program

Oregon DEQ contracted Montrose Air Quality Services, LLC (Montrose) to perform an emissions test program on a single Air Curtain Incinerator that was located at SW Fern Hill Road in Forest Grove, Oregon. The tests were conducted to develop emission factors for air toxics and criteria pollutants from an Air Curtain Incinerators for permitting within Oregon.

The specific objectives were to:

- Measure emissions of the following compounds from the ACI at the partial fume hood exhaust duct: $O_2$, $CO_2$, $SO_2$, $NO_X$, CO, VOC, NMVOC, $CH_4$, PM, PCDD, PCDF, Multiple Metals (Sb, As, Ba, Be, Cd, Cr, Co, Cu, Pb, Mn, Hg, Ni, P, Se, Ag, Tl, Zn), PAH Suite, Trichloroethene, Vinyl Acetate, Acrolein, Benzene, and Formaldehyde
- Conduct the test program with a focus on safety

Montrose performed the tests to measure the emission parameters listed in Table 1-1.

**Table 1-1**
**Summary of Test Program**

| Test Dates | Unit ID/ Source Name | Activity/Parameters | Test Methods | No. of Runs | Duration (Minutes) |
|---|---|---|---|---|---|
| 5/23/2023 | Air Curtain Incinerator | Traverse Points | EPA M1 | -- | -- |
| ″ | ″ | Pre-Test Flows[1] | EPA M2 | 6 | ~10 |
| ″ | ″ | Stack Gas Velocity, Volumetric Flow Rate | EPA M2 | 2 | 180 |
| ″ | ″ | $H_2O$ | EPA M4 | 2 | 180 |
| ″ | ″ | $O_2$, $CO_2$, $SO_2$, NOx, CO, THC, $CH_4$ | EPA M3A, 6C, 7E, 10, and 25A | 4 | 90 |
| ″ | ″ | PM | ODEQ M5 | 2 | 180 |
| ″ | ″ | PCDD, PCDF | EPA M23 (Dioxins & Furans) | 2 | 180 |
| ″ | ″ | PAH Suite | EPA SW-846 M0010 | 2 | 180 |
| 5/24/2023 | ″ | Stack Gas Velocity, Volumetric Flow Rate | EPA M2 | 2 | 180 |
| ″ | ″ | $H_2O$ | EPA M4 | 2 | 180 |

[1] See Section 2.2 for additional details

**Table 1-1**
**Summary of Test Program**

| Test Dates | Unit ID/ Source Name | Activity/Parameters | Test Methods | No. of Runs | Duration (Minutes) |
|---|---|---|---|---|---|
| “” | “” | $O_2$, $CO_2$, $SO_2$, NOx, CO, THC, $CH_4$ | EPA M3A, 6C, 7E, 10, and 25A | 4 | 90 |
| “” | “” | PM | ODEQ M5 | 1 | 180 |
| “” | “” | PCDD, PCDF | EPA M23 (Dioxins & Furans) | 1 | 180 |
| “” | “” | PAH Suite | EPA SW-846 M0010 | 1 | 180 |
| “” | “” | Multi-metals | EPA M29 | 1 | 180 |
| “” | “” | $C_3H_4O$, $C_6H_6$, $CH_2O$ | NCASI M99.02 | 1 | 180 |
| “” | “” | Trichloroethene, vinyl acetate | EPA TO-15 | 1 | 180 |
| 5/25/2023 | “” | Stack Gas Velocity, Volumetric Flow Rate | EPA M2 | 2 | 180 |
| “” | “” | $H_2O$ | EPA M4 | 2 | 180 |
| “” | “” | $O_2$, $CO_2$, $SO_2$, NOx, CO, THC, $CH_4$ | EPA M3A, 6C, 7E, 10, and 25A | 4 | 90 |
| “” | “” | Multi-metals | EPA M29 | 2 | 180 |
| “” | “” | $C_3H_4O$, $C_6H_6$, $CH_2O$ | NCASI M99.02 | 2 | 180 |
| “” | “” | Trichloroethene, vinyl acetate | EPA TO-15 | 2 | 180 |
| 5/23-5/25/2023 | “” | Biochar, H, N, C, Moisture | ASTM D5373, D3173-03, D3302-07ae1 | 3 | -- |
| 5/23-5/25/2023 | “” | Fuel Sample for Btu/lb & F-Factor | Ultimate & Proximate Analysis | 3 | -- |
| 5/23-5/25/2023 | “” | Emission Rate, lb/MMBtu | EPA M19 | -- | -- |
| 5/23-5/25/2023 | “” | TC Calibration | EPA ALT-011 | -- | -- |

To simplify this report, a list of Units and Abbreviations is included in Appendix D.1. Throughout this report, chemical nomenclature, acronyms, and reporting units are not defined. Please refer to the list for specific details.

This report presents the test results and supporting data, descriptions of the testing procedures, descriptions of the facility and sampling locations, and a summary of the quality assurance procedures used by Montrose. The average emission test results are summarized in Tables 1-2 through 1-4. Detailed results for individual test runs can be found in Section 4.0. All supporting data can be found in the appendices.

The testing was conducted by the Montrose personnel listed in Table 1-5. The tests were conducted according to the test plan (protocol) dated April 18, 2023 that was submitted to and approved by ODEQ.

**Table 1-2**
**Summary of Average Results – Air Curtain Incinerator**

**May 23-25, 2023**

| Parameter/Units | Average Results |
|---|---|
| **Particulate Matter (PM)** | |
| gr/dscf | 0.132 |
| lb/hr | 3.18 |
| lb/MMBtu | 0.824 |
| lb/ton wood fuel | 4.25 |
| **Total Dioxins/Furans (PCDD/PCDF)[2]** | |
| ng/dscm | 0.223 |
| lb/hr | 2.16E-09 |
| lb/MMBtu | 6.03E-10 |
| lb/ton wood fuel | 2.88E-09 |
| **Individual PAH compounds** | See Section 4, Table 4-10 |
| **Individual Metals** | See Section 4, Table 4-9 |

[2] Based on WTEQ (ND=0, EMPC=EMPC)

**Table 1-3**
**Summary of Average Results – Air Curtain Incinerator**

**May 23-25, 2023**

| Parameter/Units | Average Results |
|---|---|
| **Acrolein** | |
| ppmvd | 0.3742 |
| lb/hr | 8.96E-03 |
| lb/MMBtu | 2.06E-03 |
| lb/ton wood fuel | 1.25E-02 |
| **Formaldehyde** | |
| ppmvd | 4.34 |
| lb/hr | 5.42E-02 |
| lb/MMBtu | 1.26E-02 |
| lb/ton wood fuel | 7.61E-02 |
| **Benzene** | |
| ppmvd | 0.551 |
| lb/hr | 1.83E-02 |
| lb/MMBtu | 4.12E-06 |
| lb/ton wood fuel | 2.31E-02 |
| **Trichloroethene** | |
| ppmvd | <1.87E-03 |
| lb/hr | <1.06E-04 |
| lb/MMBtu | <1.61E-02 |
| lb/ton wood fuel | <1.41E-04 |
| **Vinyl Acetate** | |
| ppmvd | <1.01E-01 |
| lb/hr | <3.66E-03 |
| lb/MMBtu | <5.36E-02 |
| lb/ton wood fuel | <4.82E-03 |

**Table 1-4**
**Summary of Average Results – Air Curtain Incinerator**

**May 23-25, 2023**

| Parameter/Units | Average Results, Runs 1-3 | Average Results, Runs 4-6 | Average of All Runs |
|---|---|---|---|
| **Sulfur Dioxide ($SO_2$)** | | | |
| ppmvd | 7.34 | 6.42 | 6.88 |
| lb/hr | 0.21 | 0.17 | 0.19 |
| lb/MMBtu | 0.054 | 0.039 | 0.046 |
| lb/ton wood fuel | 0.27 | 0.22 | 0.24 |
| **Nitrogen Oxides ($NO_x$)** | | | |
| ppmvd | 69.0 | 83.2 | 76.1 |
| lb/hr | 1.40 | 1.61 | 1.50 |
| lb/MMBtu | 0.362 | 0.367 | 0.365 |
| lb/ton wood fuel | 1.85 | 2.11 | 1.98 |
| **Carbon Monoxide (CO)** | | | |
| ppmvd | 1,014 | 811 | 912 |
| lb/hr | 12.5 | 9.5 | 11.0 |
| lb/MMBtu | 3.26 | 2.16 | 2.71 |
| lb/ton wood fuel | 16.4 | 12.1 | 14.2 |
| **Total Hydrocarbons, as Propane (VOC)** | | | |
| ppmvd | 91.5 | 57.6 | 74.5 |
| lb/hr | 1.78 | 1.06 | 1.42 |
| lb/MMBtu | 0.463 | 0.241 | 0.352 |
| lb/ton wood fuel | 2.32 | 1.35 | 1.84 |
| **Methane ($CH_4$)** | | | |
| ppmvd | 32.8 | 21.8 | 27.3 |
| lb/hr | 0.637 | 0.401 | 0.519 |
| lb/MMBtu | 0.166 | 0.091 | 0.129 |
| lb/ton wood fuel | 0.827 | 0.508 | 0.668 |
| **Total Non-Methane Hydrocarbons, as Propane (NMHC/NMVOC)** | | | |
| ppmvd | 58.7 | 35.8 | 47.2 |
| lb/hr | 1.14 | 0.660 | 0.900 |
| lb/MMBtu | 0.297 | 0.150 | 0.223 |
| lb/ton wood fuel | 1.49 | 0.845 | 1.17 |

## 1.2 Key Personnel

A list of project participants is included below:

**Test Location Information**

| | |
|---|---|
| Source Location: | Fern Hill Property<br>1399 SW Fern Hill Road<br>Forest Grove, OR 97116 |
| Project Contact: | Randy Lawrence |
| Role: | Water Resources Project Manager |
| Company: | Clean Water Services |
| Telephone: | 503-681-3683 |
| Email: | lawrencer@cleanwaterservices.org |

**Agency Information**

| | | |
|---|---|---|
| Regulatory Agency: | ODEQ | |
| Agency Contact: | Margaret Miller | Thomas Rhodes |
| Title: | Air Quality Planner, Forester | CAO Source Test Coordinator |
| Telephone: | 503-347-5028 | 503-229-5534 |
| Email: | margaret.miller@deq.oregon.gov | Thomas.rhodes@deq.oregon.gov |

**Testing Company Information**

| | | |
|---|---|---|
| Testing Firm: | Montrose Air Quality Services, LLC | |
| Contact: | Kristina Schafer | Sebastian Wolfendale |
| Title: | PNW District Manager | Client Project Manager |
| Telephone: | 253-480-3801 | 503-255-5050 |
| Email: | kschafer@montrose-env.com | sewolfendale@montrose-env.com |

**Laboratory Information**

| | | |
|---|---|---|
| Laboratory: | Chester LabNet | Enthalpy |
| City, State: | Tigard, OR | Durham and Wilmington, NC; Orange, CA |
| Method: | ODEQ 5, EPA 29 | EPA 23, TO-15, SW-846 M0010 |
| Laboratory: | AAC | Hazen Research, Inc. |
| City, State: | Ventura, CA | Golden, CO |
| Method: | TO-15, NCASI 99.02 | ASTM D3172, ASTM D3176 |
| Laboratory: | ALS Environmental | |
| City, State: | Tuczon, AZ | |
| Method: | ASTM D5373, ASTM D3173-03, ASTM D3302-07ae1, Grind | |

Test personnel and observers are summarized in Table 1-5.

**Table 1-5**
**Test Personnel and Observers**

| Name | Affiliation | Role/Responsibility |
|---|---|---|
| Sebastian Wolfendale | Montrose | Project Manager/Field Team Leader/Qualified Individual (QI)/Trailer operator/Sample recovery |
| Kristina Schafer | Montrose | Project Planning, Observer |
| Austin Goracke | Montrose | Sample train operator |
| Nicholas Woltkamp | Montrose | Sample train operator |
| Quinnton Reilly | Montrose | Sample train operator |
| Preston Bauder | Montrose | Sample train operator |
| Amber Little | Montrose | Calculations and report preparation |
| Randy Lawrence | Clean Water Services | Test Location Contact |
| Ryan Ramage | Valley Environmental | ACI Operator |
| Margaret Miller, Thomas Rhodes | ODEQ | Observers |

# 2.0 Plant and Sampling Location Descriptions

## 2.1 Process Description, Operation, and Control Equipment

The BurnBoss T24 has a two-cylinder liquid cooled diesel engine, 12.5 HP (Kubota Z482-E3 or equivalent), full enclosure; security locks around power source; emissions certified U.S. EPA Tier4. The patented BurnBoss was originally designed to support the U.S. Forest Service and its effort to prevent wildfires. Today, this equipment is used in many applications, including construction and agriculture. The BurnBoss is a self-contained, completely assembled above-ground Air Curtain Burner with a refractory lined burn-container. The small onboard diesel engine powers the air curtain fan.

## 2.2 Flue Gas Sampling Locations

Information regarding the sampling locations is presented in Table 2-1.

**Table 2-1**
**Sampling Locations**

| Sampling Location | Stack Inside Diameter (in.) | Distance from Nearest Disturbance | | Number of Traverse Points |
|---|---|---|---|---|
| | | Downstream EPA "B" (in./dia.) | Upstream EPA "A" (in./dia.) | |
| Air Curtain Incinerator | 12 | 96/8 | 96/8 | Isokinetic: single point traverse, as approved by ODEQ<br>Gaseous: 3 |

Sample locations were verified in the field to conform to EPA Method 1. Acceptable cyclonic flow conditions were confirmed prior to testing using EPA Method 1, Section 11.4 and were verified through Port 1. See Appendix A.1 for more information.

A preliminary 12-point traverse was completed and the closest point to the average flow at each port was chosen for testing. Single point testing was then completed at that point for each three hour isokinetic test, with 12 flow readings being taken at the single point for isokinetics and to capture any fluctuation in flow. These preliminary flows were taken at the beginning of testing on 5/23 and 5/24, in each of the three test ports.

## 2.3 Operating Conditions and Process Data

Emission tests were performed while the ACI was operating normally and as required by the Valley operating permit.

Plant personnel were responsible for establishing the test conditions and collecting all applicable unit-operating data. The process data that was provided is presented in Appendix B. Data collected includes the following parameters:

- ACI load times – obtained by Valley
- Weight of biomass fuel – obtained by Valley
- Heat content and F-factor of biomass fuel – obtained by Montrose

Fuel Weighing Procedure: Wood fuel was loaded into one of two or three drop boxes on site and was weighed in the drop box prior to loading in the ACI. Prior to loading a tare weight for each drop box was obtained. Each drop box provides approximately one hour of fuel for the ACI. Valley Environmental provided the drop boxes and was responsible for the loading, weighing, and reloading of the drop boxes. Only fuel that was loaded into the ACI as part of the test burn was weighed.

The scale was located at the Waste Management facility located on site at 1525 B Street, Forest Grove, OR 97116. The scale has a weight resolution of 20 lbs. Drivers came to a complete stop before driving on to the scale, then proceeded forward slowly on the scale and made a smooth, easy stop. This prevented any sudden shifts in the scale that might have interfered with the load sensors.

Fuel Sampling Procedure: One representative sample was collected per test day. At the end of each test run all samples were aggregated and mixed to generate a single composite sample per test run. A backup sample was archived if needed for additional analysis. Only fuel that is loaded into the ACI as part of the test burn was included in the composite sample. ODEQ determined what constituted a representative sample and selected specific pieces of wood to be included in the sample. Valley Environmental bucked the wood into pieces that could be fed to the wood chipper. Montrose supplied the wood chipper, took custody of the fuel samples, and submitted them to the analysis lab.

# 3.0 Sampling and Analytical Procedures

## 3.1 Test Methods

The test methods for this test program have been presented in Table 1-1. Additional information regarding specific applications or modifications to standard procedures is presented below.

### 3.1.1 EPA Method 1

#### Sample and Velocity Traverses for Stationary Source

EPA Method 1 is used to assure that representative measurements of volumetric flow rate are obtained by dividing the cross-section of the stack or duct into equal areas, and then locating a traverse point within each of the equal areas. Acceptable sample locations must be located at least two stack or duct equivalent diameters downstream from a flow disturbance and one-half equivalent diameter upstream from a flow disturbance.

Pertinent information regarding the performance of the method is presented below:

- Method Options:
  - As discussed with ODEQ during project planning, all sampling was performed as a single point in the centroid of the stack

The sample port and traverse point locations are detailed in Appendix A.

### 3.1.2 EPA Method 2

#### Determination of Stack Gas Velocity and Volumetric Flow Rate (Type S Pitot Tube)

EPA Method 2 is used to measure the gas velocity using an S-type pitot tube connected to a pressure measurement device, and to measure the gas temperature using a calibrated thermocouple connected to a thermocouple indicator. Typically, Type S (Stausscheibe) pitot tubes conforming to the geometric specifications in the test method are used, along with an inclined manometer. The measurements are made at traverse points specified by EPA Method 1. The molecular weight of the gas stream is determined from independent measurements of $O_2$, $CO_2$, and moisture. The stack gas volumetric flow rate is calculated using the measured average velocity head, the area of the duct at the measurement plane, the measured average temperature, the measured duct static pressure, the molecular weight of the gas stream, and the measured moisture.

Pertinent information regarding the performance of the method is presented below:

- Method Options:
  - S-type pitot tube coefficient is 0.84
  - Inclined manometer was used to measure velocity
- Method Options:

- Stack gas temperatures thermocouples are checked using EPA Alternate Method 011 (ALT-011). A single-point calibration is performed using a NIST-traceable thermometer.

### 3.1.3 EPA Method ALT-011

#### Alternative Method 2 Thermocouple Calibration

EPA Approved Alternative Method 011 (ALT-011) is used as an alternative to the EPA Method 2 two-point thermocouple calibration. This procedure involves a single-point in-field check using a reference thermometer to confirm that the thermocouple system is operating properly. The temperatures of the thermocouple and reference thermometers shall agree to within ±2 °F.

### 3.1.4 EPA Method 4

#### Determination of Moisture Content in Stack Gas

EPA Method 4 is a manual, non-isokinetic method used to measure the moisture content of gas streams. Gas is sampled at a constant sampling rate through a probe and impinger train. Moisture is removed using a series of pre-weighed impingers containing methodology-specific liquids and silica gel immersed in an ice water bath. The impingers are weighed after each run to determine the percent moisture.

Pertinent information regarding the performance of the method is presented below:

- Method Options:
  - The reference method is used to measure moisture
  - Moisture sampling is performed as part of the pollutant sample trains, but at a single point as described in Section 2.2
  - Since it is theoretically impossible for measured moisture to be higher than psychrometric moisture, the psychrometric moisture is also calculated, and the lower moisture value is used in the calculations
- Method Exceptions:
  - None

### 3.1.5 EPA Methods 3A, 6C, 7E, and 10

#### Determination of Oxygen, Carbon Dioxide, Sulfur Dioxide, Nitrogen Oxides, and Carbon Monoxide Concentrations in Emissions from Stationary Sources (Instrumental Analyzer Procedures)

Concentrations of $O_2$, $CO_2$, $SO_2$, NOx, and CO are measured simultaneously using EPA Methods 3A, 6C, 7E, and 10, which are instrumental test methods. Conditioned gas is sent to a series of analyzers to measure the gaseous emission concentrations. The performance requirements of the method must be met to validate the data.

Pertinent information regarding the performance of the method is presented below:

- Method Options:
  - A dry extractive sampling system is used to report emissions on a dry basis
  - A paramagnetic analyzer is used to measure $O_2$
  - A nondispersive infrared analyzer is used to measure $CO_2$
  - An ultraviolet absorption analyzer is used to measure $SO_2$
  - A chemiluminescent analyzer is used to measure NOx
  - A gas filter correlation nondispersive infrared analyzer is used to measure CO
  - Calibration span values are 23.21% $O_2$, 22.54% $CO_2$, 30.29 ppmvd $SO_2$, 279.5 ppmvd NOx, and 7911 ppmvd CO
- Method Exceptions:
  - For gaseous emissions sampling, MDL are calculated for each analyzer. The ISDL is equal to the sensitivity of the instrumentation, which is 2% of the span value.

The typical sampling system is detailed in Figure 3-1.

**Figure 3-1**
**EPA Methods 3A ($O_2/CO_2$), 6C, 7E, 10, and 25A Sampling Train**

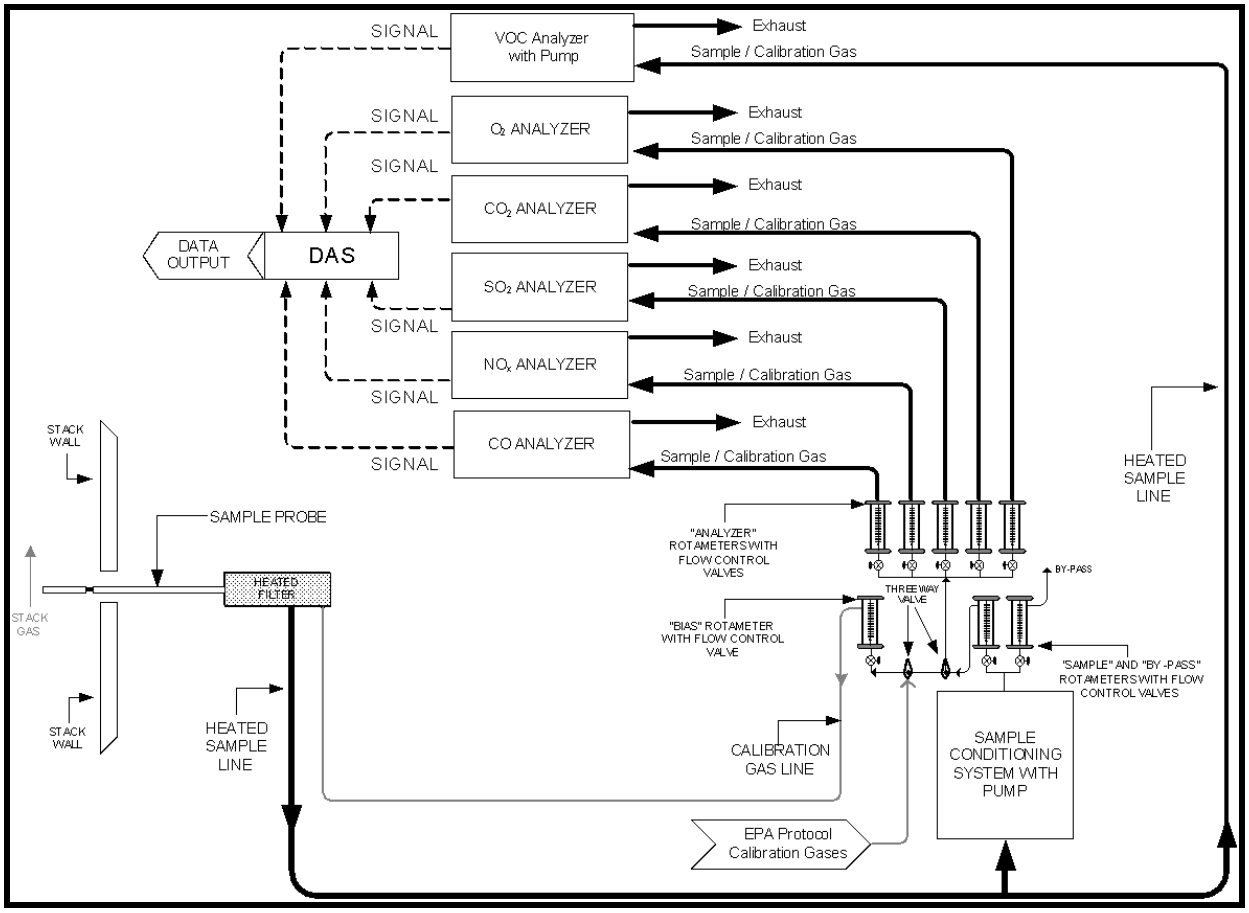


## 3.1.6 EPA Method 25A

### Determination of Total Gaseous Organic Concentration Using a Flame Ionization Analyzer

EPA Method 25A is an instrumental test method used to measure the concentration of THC in stack gas. A gas sample is extracted from the source through a heated sample line and glass fiber filter to a flame ionization analyzer (FIA). Results are reported as volume concentration equivalents of the calibration gas or as carbon equivalents.

Pertinent information regarding the performance of the method is presented below:

- Method Options:
  - Results are reported in terms of propane
  - Results are reported as total VOC, total non-methane VOCs, and as methane
  - Span value is 1000 ppmvw

  - QA/QC as described by ODEQ methane concentration measurement recommended procedures

- Method Exceptions:
  - For gaseous emissions sampling, MDL are calculated for each analyzer. The ISDL is equal to the sensitivity of the instrumentation, which is 2% of the analyzer range for EPA Method 25A

The typical sampling system is detailed in Figure 3-1.

### 3.1.7 ODEQ Method 5

#### Determination of Particulate Matter from Stationary Sources

Oregon DEQ Method 5 is a manual, isokinetic method used to measure filterable and condensable PM emissions. The samples are analyzed gravimetrically. This method is performed in conjunction with EPA Methods 1 through 4. The stack gas is sampled through a nozzle, probe, filter, and impinger train. PM results are reported in emission concentration and emission rate units.

Pertinent information regarding the performance of the method is presented below:

- Method Options:
  - Quartz sample nozzles and probe liners are used
  - Glass fiber filters are used
  - Condensed water is measured gravimetrically
- Method Exceptions:
  - Single-port isokinetic sampling was performed

The typical sampling system is detailed in Figure 3-2.

**Figure 3-2**
**ODEQ Method 5 Sampling Train**

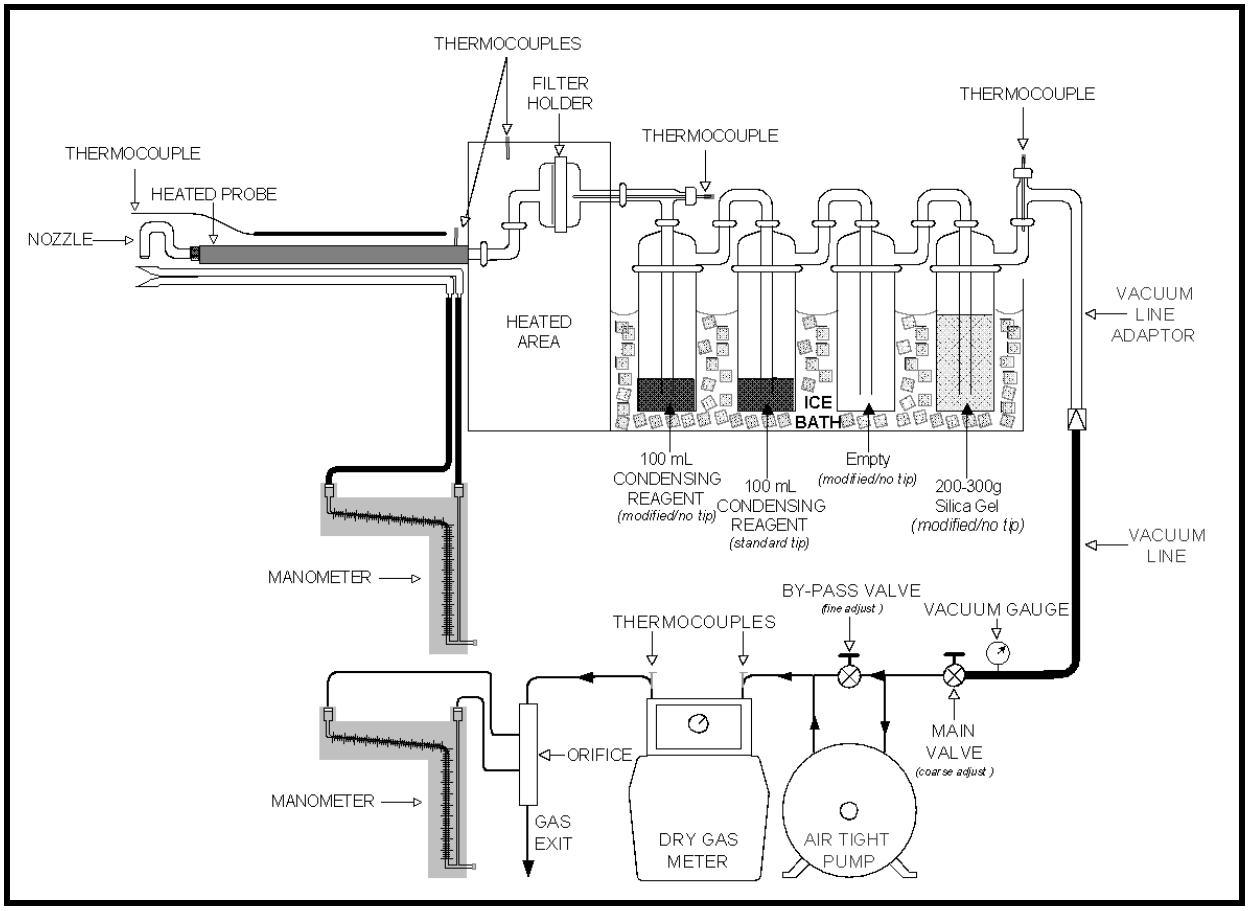


## 3.1.8 EPA Method 29

### Determination of Metals Emissions from Stationary Sources

EPA Method 29 is a manual, isokinetic test method to measure a variety of metals using inductively coupled argon plasma emission spectroscopy (ICAP) and cold vapor atomic absorption (CVAA) spectroscopy. This method is performed in conjunction with EPA Methods 1-4. A stack sample is withdrawn isokinetically from the source, filterable emissions are collected in the probe and on a heated filter, and condensable emissions are collected in an aqueous acidic solution of hydrogen peroxide (analyzed for all target analytes) and an optional aqueous acidic solution of potassium permanganate (required only when Hg is a target analyte). The recovered samples are digested, and appropriate fractions are analyzed for the target analytes which may include Hg by CVAAS and for Sb, As, Ba, Be, Cd, Cr, Co, Cu, Pb, Mn, Ni, P, Se, Ag, Tl, and Zn by ICAP or atomic absorption spectroscopy (AAS). Graphite furnace atomic absorption spectroscopy (GFAAS) is used for analysis of Sb, As, Cd, Co, Pb, Se, and Tl if these elements require greater analytical sensitivity than can be obtained using ICAP. AAS may be used for analysis of all target analytes if the resulting in-

stack method detection limits meet the goal of the testing program. Similarly, inductively coupled plasma-mass spectroscopy (ICP-MS) may be used for analysis of Sb, As, Ba, Be, Cd, Cr, Co, Cu, Pb, Mn, Ni, Ag, Tl and Zn. The results from analysis of individual fractions of the sample train are summed to obtain the total concentration of each metal per sample train.

Pertinent information regarding the performance of the method is presented below:

- Method Options:
  - The method was performed for the following target analytes: Antimony (Sb), Arsenic (As), Barium (Ba), Beryllium (Be), Cadmium (Cd), Chromium (Cr), Cobalt (Co), Copper (Cu), Lead (Pb), Manganese (Mn), Mercury (Hg), Nickel (Ni), Phosphorus (P), Selenium (Se), Silver (Ag), Thallium (Tl), Zinc (Zn)
  - Single point isokinetic sampling was performed
  - Analytes measured below the laboratory detection limit were reported as less than the detection limit

The typical sampling system is detailed in Figure 3-3.

**Figure 3-3**
**EPA Method 29 (Hg) Sampling Train**

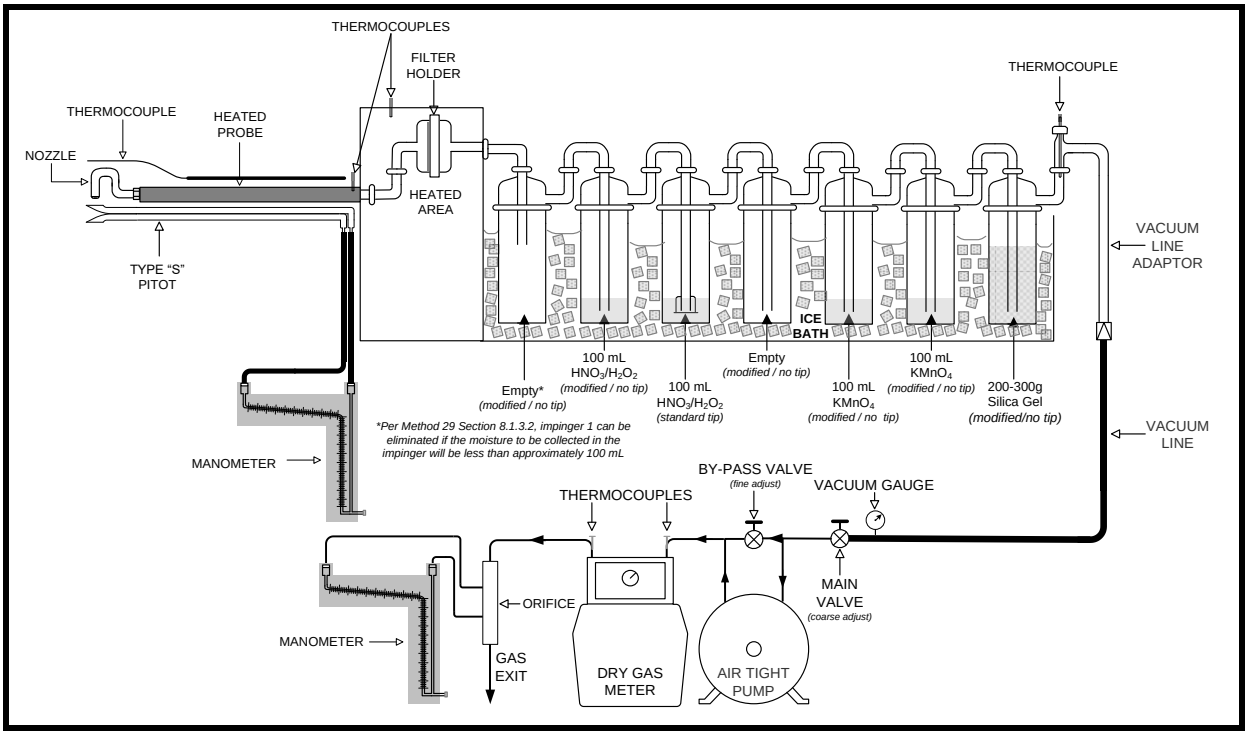


## 3.1.9 EPA SW-846 Method 0010

### Modified Method 5 Sampling Train

EPA SW-846 Method 0010 is a manual method used to measure semivolatile principal organic hazardous compound emissions. Gaseous and particulate pollutants are withdrawn from an emission source at an isokinetic sampling rate and are collected in a multicomponent sampling train. Principal components of the train include a high-efficiency glass- or quartz-fiber filter and a packed bed of porous polymeric adsorbent resin. The filter is used to collect organic-laden particulate materials and the porous polymeric resin to adsorb semivolatile organic species. Semivolatile species are defined as compounds with boiling points >100°C. Comprehensive chemical analyses of the collected sample are conducted to determine the concentration and identity of the organic materials.

Pertinent information regarding the performance of the method is presented below:

- Method Options:
  - Target analytes for the method are: Naphthalene, 2-Methylnaphthalene, Acenaphthene, Acenaphthylene, Fluorene, Phenanthrene, Anthracene, Fluoranthene, Pyrene, Benzo(a)anthracene, Chrysene, Benzo(b)fluoranthene, Benzo(k)fluoranthene, Benzo(e)pyrene, Benzo(a)pyrene, Perylene, Indeno(1,2,3-cd) pyrene, Dibenz(a,h) anthracene, Benzo(g,h,i) perylene
  - The filters are oven-dried at 105 °C (220 °F) for 2-3 hours, desiccated for 2 hours, and weighed
  - Alternative leak check procedures are used, where the probe and the rest of the sampling train are leak checked in one step at 381-mm Hg (15-in. Hg) vacuum
- Method Exceptions:
  - In lieu of dichloromethane, Montrose proposed the use of acetone with a subsequent toluene rinse
  - Analysis was performed by CARB 429 with a high-resolution gas chromatograph and high resolution mass spectrometry to achieve a lower, ng-level detection limit
  - Methylnapthalene is not able to be analyzed for at the ng-level detection limit
  - Single point isokinetic sampling was performed

**Figure 3-4**
**EPA SW-846 Method 0010 Sampling Train**

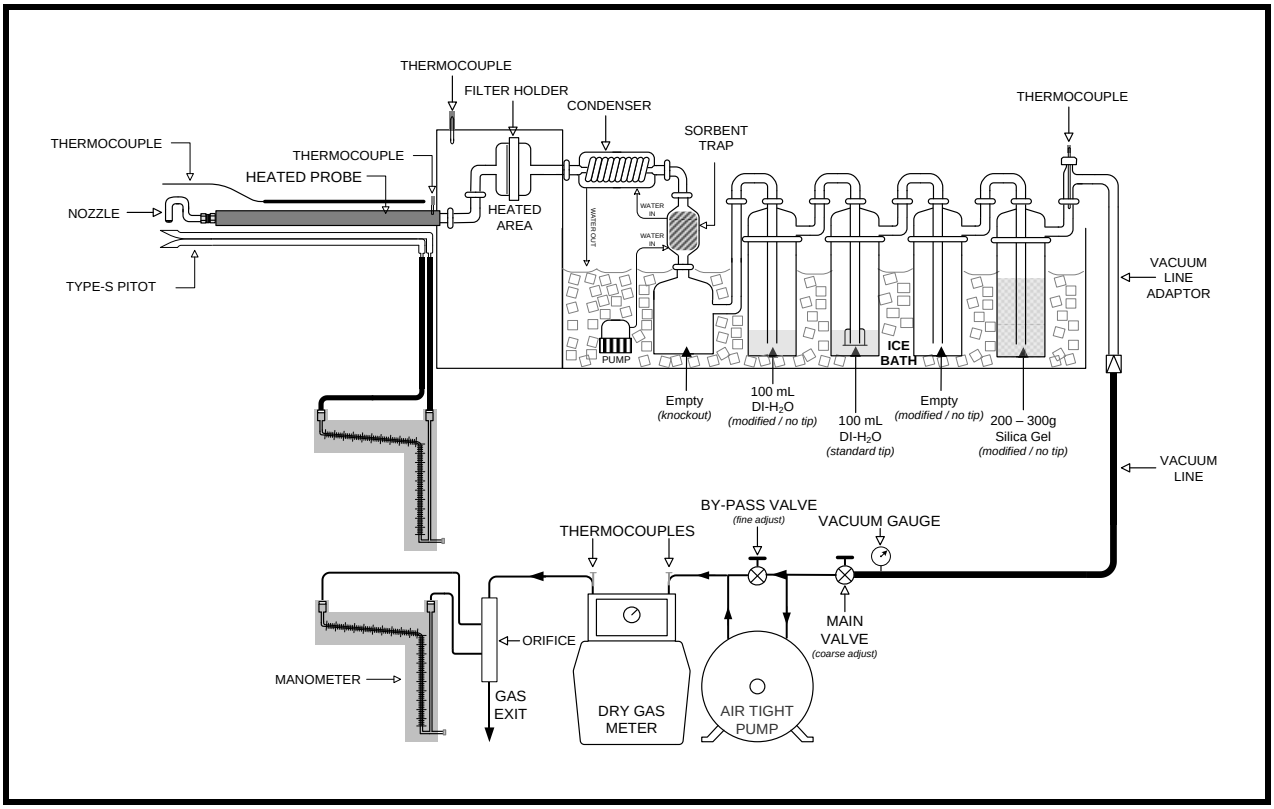


## 3.1.10 EPA Method TO-15

### Determination of Volatile Organic Compounds (VOCs) in Air Collected in Specially-Prepared Canisters and Analyzed by Gas Chromatography/Mass Spectrometry (GC/MS)

EPA Method TO-15 is a manual method used to measure VOC emissions. The atmosphere is sampled by introduction of air into a specially-prepared stainless steel canister. Both subatmospheric pressure and pressurized sampling modes use an initially evacuated canister. A pump ventilated sampling line is used during sample collection with most commercially available samplers. Pressurized sampling requires an additional pump to provide positive pressure to the sample canister. A sample of air is drawn through a sampling train comprised of components that regulate the rate and duration of sampling into the pre-evacuated and passivated canister.

After the air sample is collected, the canister valve is closed, an identification tag is attached to the canister, and the canister is transported to the laboratory for analysis. Upon receipt at the laboratory, the canister tag data is recorded and the canister is stored until analysis. Storage times of up to thirty days have been demonstrated for many of the VOCs.

To analyze the sample, a known volume of sample is directed from the canister through a solid multisorbent concentrator. A portion of the water vapor in the sample breaks through the concentrator during sampling, to a degree depending on the multisorbent composition, duration of sampling, and other factors. Water content of the sample can be further reduced by dry purging the concentrator with helium while retaining target compounds. After the concentration and drying steps are completed, the VOCs are thermally desorbed, entrained in a carrier gas stream, and then focused in a small volume by trapping on a reduced temperature trap or small volume multisorbent trap. The sample is then released by thermal desorption and carried onto a gas chromatographic column for separation.

As a simple alternative to the multisorbent/dry purge water management technique, the amount of water vapor in the sample can be reduced below any threshold for affecting the proper operation of the analytical system by reducing the sample size. For example, a small sample can be concentrated on a cold trap and released directly to the gas chromatographic column. The reduction in sample volume may require an enhancement of detector sensitivity.

Other water management approaches are also acceptable as long as their use does not compromise the attainment of the performance criteria listed in Section 11. A listing of some commercial water management systems is provided in Appendix A of the method. One of the alternative ways to dry the sample is to separate VOCs from condensate on a low temperature trap by heating and purging the trap.

The analytical strategy for Compendium Method TO-15 involves using a high resolution GC coupled to a mass spectrometer. If the mass spectrometer is a linear quadrupole system, it is operated either by continuously scanning a wide range of mass to charge ratios (SCAN mode) or by monitoring select ion monitoring mode (SIM) of compounds on the target list. If the mass spectrometer is based on a standard ion trap design, only a scanning mode is used (note however, that the Selected Ion Storage (SIS) mode for the ion trap has features of the SIM mode). Mass spectra for individual peaks in the total ion chromatogram are examined with respect to the fragmentation pattern of ions corresponding to various VOCs including the intensity of primary and secondary ions. The fragmentation pattern is compared with stored spectra taken under similar conditions, in order to identify the compound. For any given compound, the intensity of the primary fragment is compared with the system response to the primary fragment for known amounts of the compound. This establishes the compound concentration that exists in the sample.

Mass spectrometry is considered a more definitive identification technique than single specific detectors such as FID, ECD, PID, or a multidetector arrangement of these (see discussion in Compendium Method TO-14A). The use of both gas chromatographic retention time and the generally unique mass fragmentation patterns reduce the chances for misidentification. If the technique is supported by a comprehensive mass spectral database and a knowledgeable operator, then the correct identification and quantification of VOCs is further enhanced.

Pertinent information regarding the performance of the method is presented below:

- 6L Summa canisters were filled over 180 minutes using a lab provided flow controller. The stack gas passed through empty midget impingers before entering the Summa canister. The midget canisters collected no condensate over the course of the run and were rinsed with 40 mL of DI water. This 40 mL sample constituted the liquid portion of the vinyl acetate and trichloroethene samples.

The typical sampling system is detailed in Figure 3-5.

**Figure 3-5**
**EPA TO-15 Sampling Train**

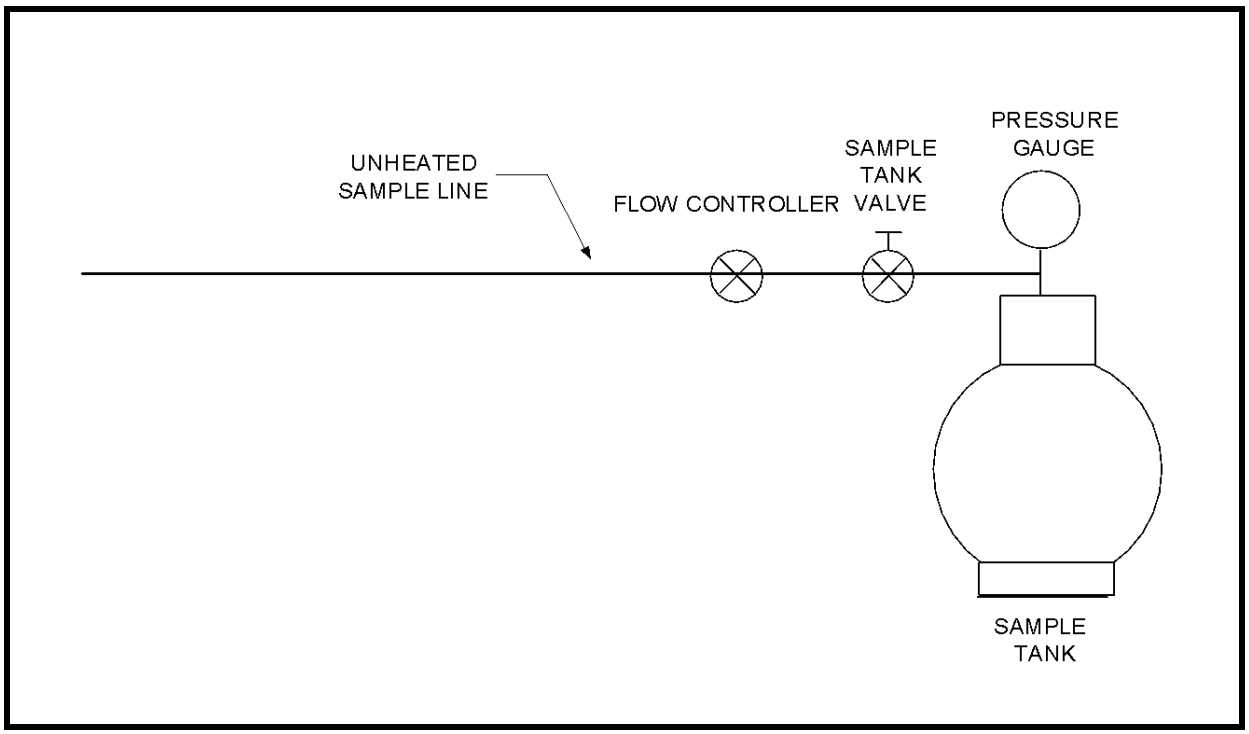


## 3.1.11 EPA Method 23

### Determination of Polychlorinated Dibenzo-p-Dioxins and Polychlorinated Dibenzofurans from Stationary Sources

EPA Method 23 is a manual, isokinetic method to measure polychlorinated dibenzo-p-dioxins (PCDD), polychlorinated dibenzofurans (PCDF), polychlorinated biphenyls (PCB), and/or polycyclic aromatic hydrocarbons (PAH) in stationary sources emissions, using high resolution gas chromatography with high resolution mass spectroscopy (HRGC/HRMS). The stack gas is sampled through a nozzle, probe, filter, sorbent trap module encased in a water-cooled condenser, and impinger train. Dioxin/furan emissions are reported in emission concentration and emission rate units.

Pertinent information regarding the performance of the method is presented below:

- Method Exceptions:
  - Acetone and toluene are used as the recovery solvents
  - Single point isokinetic sampling was performed

The typical sampling system is detailed in Figure 3-6.

**Figure 3-6**
**EPA Method 23 Sampling Train**

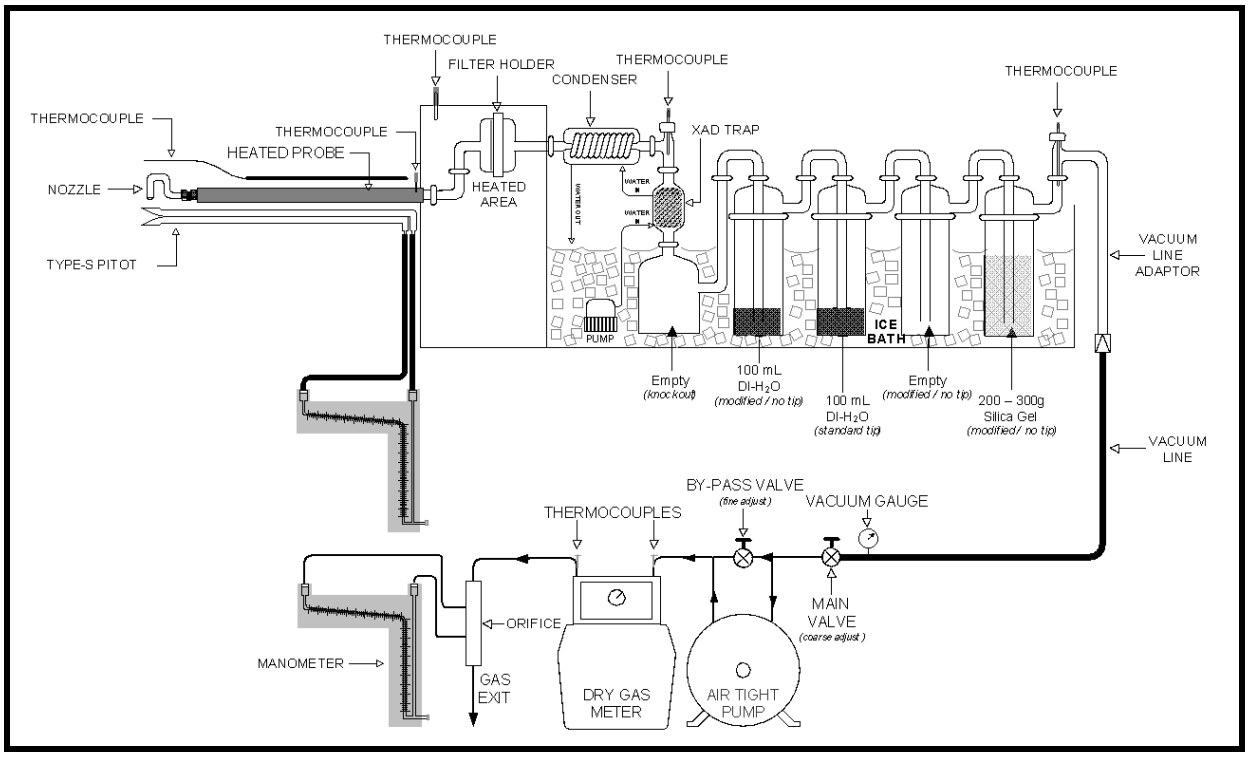


## 3.1.12 NCASI Method IM/CAN/WP-99.02

### Impinger/Canister Source Sampling Method for Selected HAPs and Other Compounds

NCASI Method IM/CAN/WP-99.02 is a manual method used to measure a select group of organic compounds including but not limited to six compounds termed "Total HAPs" emissions in the Plywood and Composite Wood Products (PWCP) MACT, terpene compounds, acetone, and cis-1,2-dichloroethylene. This method is performed in conjunction with EPA Methods 1, 2, 3A, and 4. Sampling gas passes through three chilled aqueous midget impingers containing chilled organic water. A Teflon-headed pump and a critical orifice are used to maintain a constant flow through the impingers. A portion of the gas exiting the impingers is drawn into an evacuated, inert stainless-steel canister to capture the compounds not trapped in the aqueous impingers. The flow rate must be 400 ± 100 ml/min. The quality assurance measured used to verify the performance of the collection train(s) include conducting duplicate sample runs, run spikes, train spikes, field spikes, and

field blanks. The duplicate and spiked sample trains are operated concurrently with a "normal" sample train.

Pertinent information regarding the performance of the method is presented below:

- Method Options:
  - A run spike was conducted to meet the spike recovery criteria. The spike concentration was derived from comparable data from a Hogged Fuel Boiler.
  - Dual impinger trains are connected to one sample probe and heated filter box
  - Sample flow rate was established by the use of a critical orifice and pre- and post-flow measurements (Runs 2 and 3). Run 1 flow rate determined by a liter meter.

The typical sampling system is detailed in Figure 3-7.

**Figure 3-7**
**NCASI 99.02 Sampling Train**

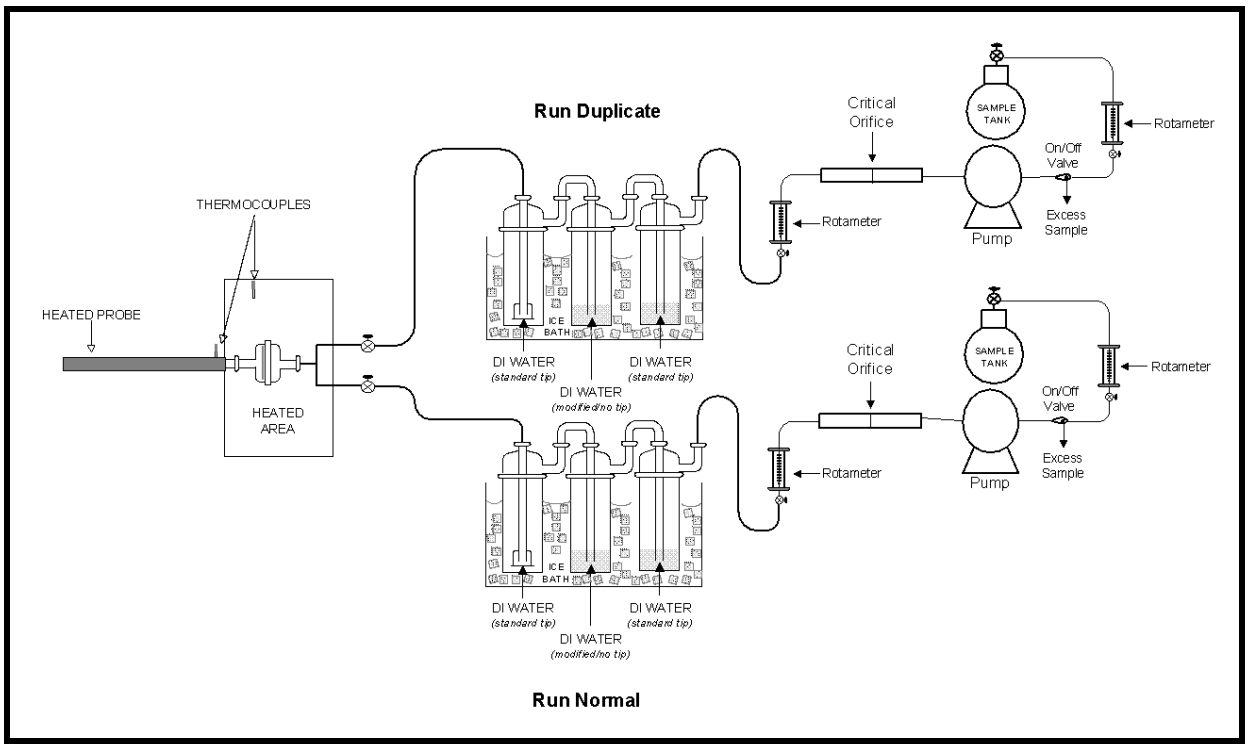


## 3.1.13 EPA Method 19

### Determination of Sulfur Dioxide Removal Efficiency and Particulate Matter, Sulfur Dioxide, and Nitrogen Oxide Emission Rates

EPA Method 19 is a manual method used to determine (a) PM, $SO_2$, and NOx emission rates; (b) sulfur removal efficiencies of fuel pretreatment and $SO_2$ control devices; and (c) overall reduction of potential $SO_2$ emissions. This method provides data reduction procedures, but does not include any sample collection or analysis procedures.

EPA Method 19 is used to calculate mass emission rates in units of lb/MMBtu. EPA Method 19, Table 19-2 contains a list of assigned fuel factors for different types of fuels, which can be used for these calculations.

Pertinent information regarding the performance of the method is presented below:

- Method Options:
  - F factor is the oxygen-based F factor, dry basis (Fd)
  - F factor is calculated from analysis of fuel samples collected on the test day

### 3.1.14 ASTM D3172 and ASTM D3176

#### Ultimate and Proximate Analysis of a Wood Fuel Sample for Heat Content and F-Factor

Pertinent information regarding the performance of the method is presented below:

- The test methods were modified by the lab for biomass in that the ash was produced and analyzed at 600°C.

### 3.1.15 ASTM D5373, ASTM D3173-03, and ASTM D3302-07ae1, Grind

#### Biochar Sample Analysis: Total carbon, hydrogen, and nitrogen; moisture; and sample prep

Pertinent information regarding the performance of the method is presented below:

- Two biochar samples were collected by Montrose and Valley Environmental per full test program day. Only one sample was analyzed, the other was held in archive.
- The samples were analyzed for total carbon, hydrogen, and nitrogen, and moisture.

## 3.2 Process Test Methods

Fuel samples were collected during this test program, as described in Sections 2.3, 3.1.14 and 3.1.15. Results of the analyses are in the appendices.

# 4.0 Test Discussion and Results

## 4.1 Field Test Deviations and Exceptions

The TO-15 canister samples were pulled through midget impingers. The impingers were rinsed with DI water into vials for analysis by EPA Method 8260B. This was an additional analysis that was not part of the initial test scope.

The 3-hr orifices for NCASI Method 99.02 were only getting to -15 to -20 in. Hg vacuum. ODEQ was notified and there was no change to the sampling time.

No other field deviations or exceptions from the test plan or test methods occurred during this test program.

## 4.2 Presentation of Results

The average results are presented in Tables 1-2 through 1-4. The results of individual test runs performed are presented in Tables 4-1 through 4-10. Emissions are reported in units consistent with those in the applicable regulations or requirements. Additional information is included in the appendices as presented in the Table of Contents.

The EPA Method 29 front half reagent blank had a nickel mass that was greater than the run result. While nickel was detected in the sample, the method detection limit (MDL) was used for calculations due to the reagent blank having a higher mass than the sample. The run results are thus flagged as non-detect (ND).

Naphthalene concentrations and mass emissions are reported as greater than (>) due to the results being saturated, as reported by the lab. See Section 5.2 for additional details.

**Table 4-1**
**$SO_2$, $NO_x$, and CO Emissions Results -**
**Air Curtain Incinerator**

| Parameter/Units | Run 1 | Run 2 | Run 3 | Average |
|---|---|---|---|---|
| **Date** | 5/23/2023 | 5/23/2023 | 5/24/2023 | -- |
| **Time** | 0951-1310 | 1410-1727 | 0925-1242 | **--** |
| **Process Data** | | | | |
| F-factor, dscf/MMBtu | 9,778 | 9,778 | 9,960 | 9,839 |
| wood fuel loaded, tons/hr | 0.847 | 0.590 | 0.910 | 0.782 |
| **Sampling & Flue Gas Parameters** | | | | |
| sample duration, minutes | 180 | 180 | 180 | -- |
| $O_2$, % volume dry | 16.6 | 16.2 | 15.8 | 16.2 |
| $CO_2$, % volume dry | 4.2 | 4.6 | 5.0 | 4.6 |
| flue gas temperature, °F | 797 | 895 | 872 | 855 |
| moisture content, % volume | 8.0 | 7.4 | 9.3 | 8.3 |
| volumetric flow rate, dscfm | 2,976 | 2,855 | 2,653 | 2,828 |
| **Sulfur Dioxide ($SO_2$)** | | | | |
| ppmvd | 8.28 | 5.91 | 7.83 | 7.34 |
| lb/hr | 0.246 | 0.168 | 0.207 | 0.207 |
| lb/MMBtu | 0.066 | 0.043 | 0.053 | 0.054 |
| lb/ton | 0.290 | 0.285 | 0.228 | 0.268 |
| **Nitrogen Oxides ($NO_x$)** | | | | |
| ppmvd | 65.2 | 68.9 | 72.9 | 69.0 |
| lb/hr | 1.39 | 1.41 | 1.39 | 1.40 |
| lb/MMBtu | 0.372 | 0.357 | 0.358 | 0.362 |
| lb/ton | 1.64 | 2.39 | 1.52 | 1.85 |
| **Carbon Monoxide (CO)** | | | | |
| ppmvd | 1,086 | 911 | 1,044 | 1,014 |
| lb/hr | 14.1 | 11.3 | 12.1 | 12.5 |
| lb/MMBtu | 3.77 | 2.87 | 3.12 | 3.26 |
| lb/ton | 16.6 | 19.2 | 13.3 | 16.4 |

**Table 4-2**
**$SO_2$, $NO_x$, and CO Emissions Results -**
**Air Curtain Incinerator**

| Parameter/Units | Run 4 | Run 5 | Run 6 | Average |
|---|---|---|---|---|
| **Date** | 5/24/2023 | 5/25/2023 | 5/25/2023 | -- |
| **Time** | 1418-1732 | 0852-1208 | 1308-1628 | **--** |
| **Process Data** | | | | |
| F-factor, dscf/MMBtu | 9,960 | 9,729 | 9,729 | 9,806 |
| wood fuel loaded, tons/hr | 0.720 | 0.930 | 0.683 | 0.778 |
| **Sampling & Flue Gas Parameters** | | | | |
| sample duration, minutes | 180 | 180 | 180 | -- |
| $O_2$, % volume dry | 15.6 | 15.0 | 15.4 | 15.4 |
| $CO_2$, % volume dry | 5.2 | 5.8 | 5.4 | 5.4 |
| flue gas temperature, °F | 810 | 1,019 | 1,035 | 954 |
| moisture content, % volume | 7.7 | 10.4 | 8.5 | 8.9 |
| volumetric flow rate, dscfm | 2,945 | 2,548 | 2,623 | 2,706 |
| **Sulfur Dioxide ($SO_2$)** | | | | |
| ppmvd | 5.31 | 8.48 | 5.48 | 6.42 |
| lb/hr | 0.156 | 0.216 | 0.143 | 0.172 |
| lb/MMBtu | 0.035 | 0.049 | 0.034 | 0.039 |
| lb/ton | 0.217 | 0.232 | 0.210 | 0.219 |
| **Nitrogen Oxides ($NO_x$)** | | | | |
| ppmvd | 82.8 | 87.1 | 79.5 | 83.2 |
| lb/hr | 1.75 | 1.59 | 1.49 | 1.61 |
| lb/MMBtu | 0.388 | 0.360 | 0.354 | 0.367 |
| lb/ton | 2.43 | 1.71 | 2.19 | 2.11 |
| **Carbon Monoxide (CO)** | | | | |
| ppmvd | 704 | 1,078 | 650 | 811 |
| lb/hr | 9.05 | 12.0 | 7.43 | 9.49 |
| lb/MMBtu | 2.01 | 2.71 | 1.76 | 2.16 |
| lb/ton | 12.6 | 12.9 | 10.9 | 12.1 |

**Table 4-3**
**VOC Emissions Results -**
**Air Curtain Incinerator**

| Parameter/Units | Run 1 | Run 2 | Run 3 | Average |
|---|---|---|---|---|
| **Date** | 5/23/2023 | 5/23/2023 | 5/24/2023 | -- |
| **Time** | 0951-1310 | 1410-1727 | 0925-1242 | **--** |
| **Process Data** | | | | |
| F-factor, dscf/MMBtu | 9,778 | 9,778 | 9,960 | 9,839 |
| wood fuel loaded, tons/hr | 0.847 | 0.590 | 0.910 | 0.782 |
| **Sampling & Flue Gas Parameters** | | | | |
| sample duration, minutes | 180 | 180 | 180 | -- |
| $O_2$, % volume dry | 16.6 | 16.2 | 15.8 | 16.2 |
| $CO_2$, % volume dry | 4.2 | 4.6 | 5.0 | 4.6 |
| flue gas temperature, °F | 797 | 895 | 872 | 855 |
| moisture content, % volume | 8.0 | 7.4 | 9.3 | 8.3 |
| volumetric flow rate, dscfm | 2,976 | 2,855 | 2,653 | 2,828 |
| **Total Hydrocarbons (THC) as propane** | | | | |
| ppmvd | 97.7 | 80.8 | 96.1 | 91.5 |
| lb/hr | 2.00 | 1.58 | 1.75 | 1.78 |
| lb/MMBtu | 0.534 | 0.401 | 0.452 | 0.463 |
| **Methane ($CH_4$) as propane** | | | | |
| ppmvd | 36.6 | 27.3 | 34.5 | 32.8 |
| lb/hr | 0.749 | 0.535 | 0.628 | 0.637 |
| lb/MMBtu | 0.200 | 0.136 | 0.162 | 0.166 |
| **Total Non-Methane VOC (NMVOC) as propane** | | | | |
| ppmvd | 61.1 | 53.5 | 61.6 | 58.7 |
| lb/hr | 1.25 | 1.05 | 1.12 | 1.14 |
| lb/MMBtu | 0.334 | 0.266 | 0.290 | 0.297 |
| lb/ton | 1.47 | 1.78 | 1.23 | 1.49 |

**Table 4-4**
**VOC Emissions Results -**
**Air Curtain Incinerator**

| Parameter/Units | Run 4 | Run 5 | Run 6 | Average |
|---|---|---|---|---|
| **Date** | 5/24/2023 | 5/25/2023 | 5/25/2023 | -- |
| **Time** | 1418-1732 | 0852-1208 | 1308-1628 | **--** |
| **Process Data** | | | | |
| F-factor, dscf/MMBtu | 9,960 | 9,729 | 9,729 | 9,806 |
| wood fuel loaded, tons/hr | 0.720 | 0.930 | 0.683 | 0.778 |
| **Sampling & Flue Gas Parameters** | | | | |
| sample duration, minutes | 180 | 180 | 180 | -- |
| $O_2$, % volume dry | 15.6 | 15.0 | 15.4 | 15.4 |
| $CO_2$, % volume dry | 5.2 | 5.8 | 5.4 | 5.4 |
| flue gas temperature, °F | 810 | 1,019 | 1,035 | 954 |
| moisture content, % volume | 7.7 | 10.4 | 8.5 | 8.9 |
| volumetric flow rate, dscfm | 2,945 | 2,548 | 2,623 | 2,706 |
| **Total Hydrocarbons (THC) as propane** | | | | |
| ppmvd | 50.1 | 76.8 | 45.8 | 57.6 |
| lb/hr | 1.01 | 1.34 | 0.825 | 1.06 |
| lb/MMBtu | 0.225 | 0.304 | 0.195 | 0.241 |
| **Methane ($CH_4$) as propane** | | | | |
| ppmvd | 18.1 | 30.7 | 16.6 | 21.8 |
| lb/hr | 0.367 | 0.537 | 0.299 | 0.401 |
| lb/MMBtu | 0.081 | 0.122 | 0.071 | 0.091 |
| **Total Non-Methane VOC (NMVOC) as propane** | | | | |
| ppmvd | 32.0 | 46.1 | 29.2 | 35.8 |
| lb/hr | 0.647 | 0.807 | 0.526 | 0.660 |
| lb/MMBtu | 0.143 | 0.183 | 0.125 | 0.150 |
| lb/ton | 0.898 | 0.868 | 0.770 | 0.845 |

**Table 4-5**
**PM Emissions Results -**
**Air Curtain Incinerator**

| Parameter/Units | Run 1 | Run 2 | Run 3 | Average |
|---|---|---|---|---|
| **Date** | 5/23/2023 | 5/23/2023 | 5/24/2023 | -- |
| **Time** | 0950-1250 | 1410-1710 | 0925-1225 | **--** |
| **Process Data** | | | | |
| F-factor, dscf/MMBtu | 9,778 | 9,778 | 9,960 | 9,839 |
| wood fuel loaded, tons/hr | 0.847 | 0.590 | 0.910 | 0.782 |
| **Sampling & Flue Gas Parameters** | | | | |
| sample duration, minutes | 180 | 180 | 180 | -- |
| sample volume, dscf | 140.2 | 128.6 | 121.3 | 130.0 |
| isokinetic rate, % | 103 | 99 | 100 | -- |
| $O_2$, % volume dry | 16.6 | 16.2 | 15.8 | 16.2 |
| $CO_2$, % volume dry | 4.2 | 4.6 | 5.0 | 4.6 |
| flue gas temperature, °F | 797 | 895 | 872 | 855 |
| moisture content, % volume | 8.0 | 7.4 | 9.3 | 8.3 |
| volumetric flow rate, dscfm | 2,976 | 2,855 | 2,653 | 2,828 |
| **Filterable Particulate Matter (PM)** | | | | |
| mg | 707.6 | 974.0 | 967.9 | 883.1 |
| gr/dscf | 0.0777 | 0.1166 | 0.1228 | 0.1057 |
| lb/hr | 1.98 | 2.85 | 2.79 | 2.54 |
| lb/MMBtu | 0.531 | 0.723 | 0.722 | 0.659 |
| lb/ton | 2.34 | 4.84 | 3.07 | 3.42 |
| **Condensable PM** | | | | |
| mg | 265.4 | 191.0 | 210.3 | 222.2 |
| gr/dscf | 0.0292 | 0.0229 | 0.0267 | 0.0262 |
| lb/hr | 0.744 | 0.560 | 0.607 | 0.637 |
| lb/MMBtu | 0.199 | 0.142 | 0.157 | 0.166 |
| lb/ton | 0.878 | 0.949 | 0.667 | 0.831 |
| **Total PM** | | | | |
| mg | 973.0 | 1164.9 | 1178.2 | 1105.4 |
| gr/dscf | 0.1069 | 0.1395 | 0.1495 | 0.1320 |
| lb/hr | 2.73 | 3.41 | 3.40 | 3.18 |
| lb/MMBtu | 0.730 | 0.865 | 0.879 | 0.824 |
| lb/ton | 3.22 | 5.79 | 3.74 | 4.25 |

**Table 4-6**
**Trichloroethene and Vinyl Acetate Results -**
**Air Curtain Incinerator**

| Parameter/Units | Run 1 | Run 2 | Run 3 | Average |
|---|---|---|---|---|
| **Date** | 5/24/2023 | 5/25/2023 | 5/25/2023 | -- |
| **Time** | 1418-1718 | 0852-1152 | 1305-1605 | **--** |
| **Process Data** | | | | |
| F-factor, dscf/MMBtu | 9,960 | 9,729 | 9,729 | 9,806 |
| wood fuel loaded, tons/hr | 0.720 | 0.930 | 0.683 | 0.778 |
| **Sampling & Flue Gas Parameters** | | | | |
| sample duration, minutes | 180 | 180 | 180 | -- |
| volumetric flow rate, dscfm | 2,945 | 2,548 | 2,623 | 2,706 |
| **Trichloroethene[3]** | | | | |
| ppmvd | <2.62E-03 | <1.42E-03 | <1.58E-03 | <1.87E-03 |
| lb/hr | <1.58E-04 | <7.40E-05 | <8.48E-05 | <1.06E-04 |
| lb/MMBtu | <2.67E-02 | <9.46E-03 | <1.22E-02 | <1.61E-02 |
| lb/ton | <2.19E-04 | <7.96E-05 | <1.24E-04 | <1.41E-04 |
| **Vinyl Acetate[2]** | | | | |
| ppmvd | <1.05E-01 | <9.86E-02 | <9.94E-02 | <1.01E-01 |
| lb/hr | <4.13E-03 | <3.37E-03 | <3.50E-03 | <3.66E-03 |
| lb/MMBtu | <8.84E-02 | <3.17E-02 | <4.08E-02 | <5.36E-02 |
| lb/ton | <5.73E-03 | <3.62E-03 | <5.12E-03 | <4.82E-03 |

[3] The gas and liquid samples for both trichloroethene and vinyl acetate were reported as <DL

**Table 4-7**
**Dioxin/Furan Emissions Results -**
**Air Curtain Incinerator**

| Parameter/Units | Run 1 | Run 2 | Run 3 | Average |
|---|---|---|---|---|
| **Date** | 5/23/2023 | 5/23/2023 | 5/24/2024 | -- |
| **Time** | 0950-1250 | 1410-1710 | 0925-1225 | **--** |
| **Process Data** | | | | |
| F-factor, dscf/MMBtu | 9,778 | 9,778 | 9,960 | 9,839 |
| wood fuel loaded, tons/hr | 0.847 | 0.590 | 0.910 | 0.782 |
| **Sampling & Flue Gas Parameters** | | | | |
| sample duration, minutes | 180 | 180 | 180 | -- |
| sample volume, dscf | 101.0 | 89.0 | 97.5 | 95.8 |
| isokinetic rate, % | 102 | 101 | 101 | -- |
| $O_2$, % volume dry | 16.6 | 16.2 | 15.8 | 16.2 |
| $CO_2$, % volume dry | 4.2 | 4.6 | 5.0 | 4.6 |
| flue gas temperature, °F | 812 | 888 | 939 | 880 |
| moisture content, % volume | 7.7 | 7.3 | 9.2 | 8.1 |
| volumetric flow rate, dscfm | 2,742 | 2,436 | 2,663 | 2,614 |
| **Total Dioxins/Furans[4]** | | | | |
| pg | 142.7 | 254.4 | 270.8 | 222.6 |
| ng/dscm | 1.43E-01 | 2.54E-01 | 2.71E-01 | 2.23E-01 |
| lb/hr | 1.46E-09 | 2.32E-09 | 2.70E-09 | 2.16E-09 |
| lb/MMBtu | 4.26E-10 | 6.89E-10 | 6.95E-10 | 6.03E-10 |
| lb/ton | 1.73E-09 | 3.93E-09 | 2.97E-09 | 2.88E-09 |

[4] Based on WTEQ (ND=0, EMPC=EMPC)

**Table 4-8**
**HAPs Emissions Results -**
**Air Curtain Incinerator**

| Parameter/Units | Run 1 | Run 2 | Run 3 | Average |
|---|---|---|---|---|
| **Date** | 5/24/2023 | 5/25/2023 | 5/25/2023 | -- |
| **Time** | 1440-1755 | 0852-1152 | 1305-1605 | **--** |
| **Process Data** | | | | |
| F-factor, dscf/MMBtu | 9,960 | 9,729 | 9,729 | 9,806 |
| wood fuel loaded, tons/hr | 0.720 | 0.930 | 0.683 | 0.778 |
| **Sampling & Flue Gas Parameters** | | | | |
| sample duration, minutes | 180 | 180 | 180 | -- |
| $O_2$, % volume dry | 15.6 | 15.0 | 15.4 | 15.4 |
| volumetric flow rate, dscfm | 2,945 | 2,548 | 2,623 | 2,706 |
| **Acrolein** | | | | |
| ppmvd | 0.4444 | 0.1070 | 0.5712 | 0.3742 |
| lb/hr | 1.14E-02 | 2.38E-03 | 1.31E-02 | 8.96E-03 |
| lb/MMBtu | 2.53E-03 | 5.39E-04 | 3.10E-03 | 2.06E-03 |
| lb/ton | 1.59E-02 | 2.56E-03 | 1.91E-02 | 1.25E-02 |
| **Formaldehyde** | | | | |
| ppmvd | 2.27 | 1.60 | 9.16 | 4.34 |
| lb/hr | 3.13E-02 | 1.91E-02 | 1.12E-01 | 5.42E-02 |
| lb/MMBtu | 6.94E-03 | 4.32E-03 | 2.66E-02 | 1.26E-02 |
| lb/ton | 4.35E-02 | 2.05E-02 | 1.64E-01 | 7.61E-02 |
| **Benzene** | | | | |
| ppmvd | 0.745 | 0.756 | 0.151 | 0.551 |
| lb/hr | 2.67E-02 | 2.34E-02 | 4.82E-03 | 1.83E-02 |
| lb/MMBtu | 5.92E-06 | 5.30E-06 | 1.14E-06 | 4.12E-06 |
| lb/ton | 3.71E-02 | 2.52E-02 | 7.05E-03 | 2.31E-02 |

**Table 4-9**
**Metals Emissions Results -**
**Air Curtain Incinerator**

| Parameter/Units | Run 1 | Run 2 | Run 3 | Average |
|---|---|---|---|---|
| **Date** | 5/24/2023 | 5/25/2023 | 5/25/2023 | -- |
| **Time** | 1418-1718 | 0852-1152 | 1305-1605 | **--** |
| **Process Data** | | | | |
| F-factor, dscf/MMBtu | 9,960 | 9,729 | 9,729 | 9,806 |
| wood fuel loaded, tons/hr | 0.720 | 0.930 | 0.683 | 0.778 |
| **Sampling & Flue Gas Parameters** | | | | |
| sample duration, minutes | 180 | 180 | 180 | -- |
| sample volume, dscf | 106.8 | 95.4 | 118.6 | 106.9 |
| isokinetic rate, % | 100 | 104 | 99 | -- |
| $O_2$, % volume dry | 15.6 | 15.0 | 15.4 | 15.4 |
| $CO_2$, % volume dry | 5.2 | 5.8 | 5.4 | 5.4 |
| flue gas temperature, °F | 810 | 1,019 | 1,035 | 954 |
| moisture content, % volume | 7.7 | 10.4 | 8.5 | 8.9 |
| volumetric flow rate, dscfm | 2,945 | 2,548 | 2,623 | 2,706 |
| **Antimony** | | | | |
| µg | <1.89 | <1.87 | <1.88 | <1.88 |
| mg/dscm | <6.25E-04 | <6.92E-04 | <5.58E-04 | <6.25E-04 |
| lb/hr | <6.88E-06 | <6.60E-06 | <5.48E-06 | <6.32E-06 |
| lb/MMBtu | <1.53E-06 | <1.49E-06 | <1.30E-06 | <1.44E-06 |
| lb/ton | <9.56E-06 | <7.10E-06 | <8.02E-06 | <8.23E-06 |
| **Arsenic** | | | | |
| µg | 12.6 | 9.90 | 11.6 | 11.4 |
| mg/dscm | 4.16E-03 | 3.67E-03 | 3.45E-03 | 3.76E-03 |
| lb/hr | 4.59E-05 | 3.50E-05 | 3.38E-05 | 3.82E-05 |
| lb/MMBtu | 1.02E-05 | 7.91E-06 | 8.01E-06 | 8.70E-06 |
| lb/ton | 6.37E-05 | 3.76E-05 | 4.95E-05 | 5.03E-05 |
| **Barium** | | | | |
| µg | 331.9 | 260.1 | 299.3 | 297.1 |
| mg/dscm | 1.10E-01 | 9.63E-02 | 8.91E-02 | 9.84E-02 |
| lb/hr | 1.21E-03 | 9.19E-04 | 8.75E-04 | 1.00E-03 |
| lb/MMBtu | 2.68E-04 | 2.08E-04 | 2.07E-04 | 2.28E-04 |
| lb/ton | 1.68E-03 | 9.88E-04 | 1.28E-03 | 1.32E-03 |

**Table 4-9**
**Metals Emissions Results Continued-**
**Air Curtain Incinerator**

| Parameter/Units | Run 1 | Run 2 | Run 3 | Average |
|---|---|---|---|---|
| **Beryllium** | | | | |
| µg | 0.56 | 0.25 | 1.06 | 0.62 |
| mg/dscm | 1.84E-04 | 9.15E-05 | 3.14E-04 | 1.97E-04 |
| lb/hr | 2.03E-06 | 8.72E-07 | 3.08E-06 | 2.00E-06 |
| lb/MMBtu | 4.51E-07 | 1.97E-07 | 7.30E-07 | 4.60E-07 |
| lb/ton | 2.82E-06 | 9.38E-07 | 4.51E-06 | 2.76E-06 |
| **Cadmium** | | | | |
| µg | 3.09 | 2.73 | 3.83 | 3.22 |
| mg/dscm | 1.02E-03 | 1.01E-03 | 1.14E-03 | 1.06E-03 |
| lb/hr | 1.13E-05 | 9.65E-06 | 1.12E-05 | 1.07E-05 |
| lb/MMBtu | 2.50E-06 | 2.18E-06 | 2.65E-06 | 2.44E-06 |
| lb/ton | 1.56E-05 | 1.04E-05 | 1.64E-05 | 1.41E-05 |
| **Chromium** | | | | |
| µg | 12.4 | 5.79 | 22.4 | 13.5 |
| mg/dscm | 4.09E-03 | 2.15E-03 | 6.68E-03 | 4.30E-03 |
| lb/hr | 4.50E-05 | 2.05E-05 | 6.56E-05 | 4.37E-05 |
| lb/MMBtu | 9.99E-06 | 4.63E-06 | 1.55E-05 | 1.01E-05 |
| lb/ton | 6.26E-05 | 2.20E-05 | 9.60E-05 | 6.02E-05 |
| **Cobalt** | | | | |
| µg | 5.62 | 2.30 | 9.81 | 5.91 |
| mg/dscm | 1.86E-03 | 8.52E-04 | 2.92E-03 | 1.88E-03 |
| lb/hr | 2.05E-05 | 8.13E-06 | 2.87E-05 | 1.91E-05 |
| lb/MMBtu | 4.54E-06 | 1.84E-06 | 6.79E-06 | 4.39E-06 |
| lb/ton | 2.84E-05 | 8.74E-06 | 4.20E-05 | 2.64E-05 |
| **Copper** | | | | |
| µg | 408.3 | 240.6 | 688.5 | 445.8 |
| mg/dscm | 1.35E-01 | 8.91E-02 | 2.05E-01 | 1.43E-01 |
| lb/hr | 1.49E-03 | 8.50E-04 | 2.01E-03 | 1.45E-03 |
| lb/MMBtu | 3.30E-04 | 1.92E-04 | 4.77E-04 | 3.33E-04 |
| lb/ton | 2.07E-03 | 9.14E-04 | 2.95E-03 | 1.97E-03 |

**Table 4-9**
**Metals Emissions Results Continued-**
**Air Curtain Incinerator**

| Parameter/Units | Run 1 | Run 2 | Run 3 | Average |
|---|---|---|---|---|
| **Lead** | | | | |
| µg | 31.3 | 16.5 | 39.8 | 29.2 |
| mg/dscm | 1.03E-02 | 6.10E-03 | 1.18E-02 | 9.43E-03 |
| lb/hr | 1.14E-04 | 5.82E-05 | 1.16E-04 | 9.61E-05 |
| lb/MMBtu | 2.53E-05 | 1.32E-05 | 2.75E-05 | 2.20E-05 |
| lb/ton | 1.58E-04 | 6.26E-05 | 1.70E-04 | 1.30E-04 |
| **Manganese** | | | | |
| µg | 381.3 | 176.6 | 636.0 | 397.9 |
| mg/dscm | 1.26E-01 | 6.54E-02 | 1.89E-01 | 1.27E-01 |
| lb/hr | 1.39E-03 | 6.24E-04 | 1.86E-03 | 1.29E-03 |
| lb/MMBtu | 3.08E-04 | 1.41E-04 | 4.40E-04 | 2.97E-04 |
| lb/ton | 1.93E-03 | 6.71E-04 | 2.72E-03 | 1.77E-03 |
| **Mercury** | | | | |
| µg | 1.14 | 1.01 | 1.90 | 1.35 |
| mg/dscm | 3.78E-04 | 3.72E-04 | 5.64E-04 | 4.38E-04 |
| lb/hr | 4.17E-06 | 3.55E-06 | 5.54E-06 | 4.42E-06 |
| lb/MMBtu | 9.25E-07 | 8.04E-07 | 1.31E-06 | 1.01E-06 |
| lb/ton | 5.79E-06 | 3.82E-06 | 8.11E-06 | 5.90E-06 |
| **Nickel** | | | | |
| µg | 2.58 | <1.12 | 8.08 | 3.93 |
| mg/dscm | 8.54E-04 | <4.15E-04 | 2.40E-03 | 1.22E-03 |
| lb/hr | 9.41E-06 | <3.96E-06 | 2.36E-05 | 1.23E-05 |
| lb/MMBtu | 2.09E-06 | <8.97E-07 | 5.59E-06 | 2.86E-06 |
| lb/ton | 1.31E-05 | <4.26E-06 | 3.45E-05 | 1.73E-05 |
| **Phosphorus** | | | | |
| µg | 7,551 | 4,487 | 12,703 | 8,247 |
| mg/dscm | 2.50 | 1.66 | 3.78 | 2.65 |
| lb/hr | 2.75E-02 | 1.58E-02 | 3.71E-02 | 2.68E-02 |
| lb/MMBtu | 6.10E-03 | 3.59E-03 | 8.79E-03 | 6.16E-03 |
| lb/ton | 3.82E-02 | 1.70E-02 | 5.43E-02 | 3.65E-02 |

**Table 4-9**
**Metals Emissions Results Continued-**
**Air Curtain Incinerator**

| Parameter/Units | Run 1 | Run 2 | Run 3 | Average |
|---|---|---|---|---|
| **Selenium** | | | | |
| µg | <5.67 | <5.61 | <5.63 | <5.64 |
| mg/dscm | <1.87E-03 | <2.08E-03 | <1.68E-03 | <1.88E-03 |
| lb/hr | <2.07E-05 | <1.98E-05 | <1.65E-05 | <1.90E-05 |
| lb/MMBtu | <4.58E-06 | <4.48E-06 | <3.90E-06 | <4.32E-06 |
| lb/ton | <2.87E-05 | <2.13E-05 | <2.41E-05 | <2.47E-05 |
| **Silver** | | | | |
| µg | 3.01 | 2.35 | 3.44 | 2.93 |
| mg/dscm | 9.94E-04 | 8.69E-04 | 1.02E-03 | 9.63E-04 |
| lb/hr | 1.10E-05 | 8.29E-06 | 1.01E-05 | 9.77E-06 |
| lb/MMBtu | 2.43E-06 | 1.88E-06 | 2.38E-06 | 2.23E-06 |
| lb/ton | 1.52E-05 | 8.92E-06 | 1.47E-05 | 1.30E-05 |
| **Thallium** | | | | |
| µg | 1.80 | 1.58 | 2.00 | 1.79 |
| mg/dscm | 5.94E-04 | 5.87E-04 | 5.95E-04 | 5.92E-04 |
| lb/hr | 6.55E-06 | 5.59E-06 | 5.84E-06 | 6.00E-06 |
| lb/MMBtu | 1.45E-06 | 1.27E-06 | 1.38E-06 | 1.37E-06 |
| lb/ton | 9.10E-06 | 6.02E-06 | 8.55E-06 | 7.89E-06 |
| **Zinc** | | | | |
| µg | 1,734 | 1,528 | 3,262 | 2,175 |
| mg/dscm | 5.73E-01 | 5.66E-01 | 9.71E-01 | 7.03E-01 |
| lb/hr | 6.32E-03 | 5.40E-03 | 9.54E-03 | 7.08E-03 |
| lb/MMBtu | 1.40E-03 | 1.22E-03 | 2.26E-03 | 1.63E-03 |
| lb/ton | 8.78E-03 | 5.80E-03 | 1.40E-02 | 9.51E-03 |

**Table 4-10**
**PAH Emissions Results -**
**Air Curtain Incinerator**

| Parameter/Units | Run 1 | Run 2 | Run 3 | Average |
|---|---|---|---|---|
| **Date** | 5/23/2023 | 5/23/2023 | 5/24/2023 | -- |
| **Time** | 0950-1250 | 1410-1710 | 0925-1225 | **--** |
| **Process Data** | | | | |
| F-factor, dscf/MMBtu | 9,778 | 9,778 | 9,960 | 9,839 |
| wood fuel loaded, tons/hr | 0.847 | 0.590 | 0.910 | 0.782 |
| **Sampling & Flue Gas Parameters** | | | | |
| sample duration, minutes | 180 | 180 | 180 | -- |
| sample volume, dscf | 80.0 | 104.6 | 116.8 | 100.5 |
| isokinetic rate, % | 105 | 99 | 102 | -- |
| $O_2$, % volume dry | 16.6 | 16.2 | 15.8 | 16.2 |
| $CO_2$, % volume dry | 4.2 | 4.6 | 5.0 | 4.6 |
| flue gas temperature, °F | 780 | 863 | 899 | 847 |
| moisture content, % volume | 7.8 | 7.0 | 9.3 | 8.0 |
| volumetric flow rate, dscfm | 2,780 | 2,579 | 2,795 | 2,718 |
| **Naphthalene** | | | | |
| ng | >1,040,000 | >648,000 | >540,000 | >742,667 |
| ng/dscm | >459,247 | >218,648 | >163,206 | >280,367 |
| lb/hr | >4.78E-03 | >2.11E-03 | >1.71E-03 | >2.87E-03 |
| lb/MMBtu | >1.37E-03 | >5.92E-04 | >4.19E-04 | >7.93E-04 |
| lb/ton | >5.64E-03 | >3.58E-03 | >1.88E-03 | >3.70E-03 |
| **2-Methylnaphthalene** | | | | |
| ng | 190,000 | 163,000 | 243,000 | 198,667 |
| ng/dscm | 83,901 | 54,999 | 73,443 | 70,781 |
| lb/hr | 8.73E-04 | 5.31E-04 | 7.68E-04 | 7.24E-04 |
| lb/MMBtu | 2.50E-04 | 1.49E-04 | 1.88E-04 | 1.96E-04 |
| lb/ton | 1.03E-03 | 9.00E-04 | 8.44E-04 | 9.25E-04 |
| **Acenaphthylene** | | | | |
| ng | 103,000 | 54,800 | 115,000 | 90,933 |
| ng/dscm | 45,483 | 18,491 | 34,757 | 32,910 |
| lb/hr | 4.73E-04 | 1.78E-04 | 3.64E-04 | 3.38E-04 |
| lb/MMBtu | 1.36E-04 | 5.00E-05 | 8.92E-05 | 9.16E-05 |
| lb/ton | 5.59E-04 | 3.03E-04 | 4.00E-04 | 4.20E-04 |

**Table 4-10**
**PAH Emissions Results Continued-**
**Air Curtain Incinerator**

| Parameter/Units | Run 1 | Run 2 | Run 3 | Average |
|---|---|---|---|---|
| **Acenaphthene** | | | | |
| ng | 11,500 | 10,200 | 18,900 | 13,533 |
| ng/dscm | 5,078 | 3,442 | 5,712 | 4,744 |
| lb/hr | 5.28E-05 | 3.32E-05 | 5.98E-05 | 4.86E-05 |
| lb/MMBtu | 1.51E-05 | 9.32E-06 | 1.47E-05 | 1.30E-05 |
| lb/ton | 6.24E-05 | 5.63E-05 | 6.57E-05 | 6.15E-05 |
| **Fluorene** | | | | |
| ng | 111,000 | 56,400 | 119,000 | 95,467 |
| ng/dscm | 49,016 | 19,030 | 35,966 | 34,671 |
| lb/hr | 5.10E-04 | 1.84E-04 | 3.76E-04 | 3.57E-04 |
| lb/MMBtu | 1.46E-04 | 5.15E-05 | 9.23E-05 | 9.67E-05 |
| lb/ton | 6.02E-04 | 3.11E-04 | 4.13E-04 | 4.42E-04 |
| **Phenanthrene** | | | | |
| ng | 344,000 | 234,000 | 262,000 | 280,000 |
| ng/dscm | 151,905 | 78,956 | 79,185 | 103,349 |
| lb/hr | 1.58E-03 | 7.62E-04 | 8.28E-04 | 1.06E-03 |
| lb/MMBtu | 4.53E-04 | 2.14E-04 | 2.03E-04 | 2.90E-04 |
| lb/ton | 1.87E-03 | 1.29E-03 | 9.10E-04 | 1.36E-03 |
| **Anthracene** | | | | |
| ng | 44,300 | 17,400 | 34,400 | 32,033 |
| ng/dscm | 19,562 | 5,871 | 10,397 | 11,943 |
| lb/hr | 2.04E-04 | 5.67E-05 | 1.09E-04 | 1.23E-04 |
| lb/MMBtu | 5.83E-05 | 1.59E-05 | 2.67E-05 | 3.36E-05 |
| lb/ton | 2.40E-04 | 9.61E-05 | 1.20E-04 | 1.52E-04 |
| **Fluoranthrene** | | | | |
| ng | 273,000 | 110,000 | 266,000 | 216,333 |
| ng/dscm | 120,552 | 37,116 | 80,394 | 79,354 |
| lb/hr | 1.25E-03 | 3.58E-04 | 8.41E-04 | 8.18E-04 |
| lb/MMBtu | 3.59E-04 | 1.00E-04 | 2.06E-04 | 2.22E-04 |
| lb/ton | 1.48E-03 | 6.07E-04 | 9.24E-04 | 1.00E-03 |

**Table 4-10**
**PAH Emissions Results Continued-**
**Air Curtain Incinerator**

| Parameter/Units | Run 1 | Run 2 | Run 3 | Average |
|---|---|---|---|---|
| **Pyrene** | | | | |
| ng | 71,300 | 49,900 | 72,000 | 64,400 |
| ng/dscm | 31,485 | 16,837 | 21,761 | 23,361 |
| lb/hr | 3.28E-04 | 1.63E-04 | 2.28E-04 | 2.39E-04 |
| lb/MMBtu | 9.39E-05 | 4.56E-05 | 5.58E-05 | 6.51E-05 |
| lb/ton | 3.87E-04 | 2.75E-04 | 2.50E-04 | 3.04E-04 |
| **Benzo(a)anthracene** | | | | |
| ng | 15,000 | 8,350 | 33,100 | 18,817 |
| ng/dscm | 6,624 | 2,817 | 10,004 | 6,482 |
| lb/hr | 6.89E-05 | 2.72E-05 | 1.05E-04 | 6.69E-05 |
| lb/MMBtu | 1.98E-05 | 7.63E-06 | 2.57E-05 | 1.77E-05 |
| lb/ton | 8.14E-05 | 4.61E-05 | 1.15E-04 | 8.08E-05 |
| **Chrysene** | | | | |
| ng | 24,700 | 17,200 | 48,700 | 30,200 |
| ng/dscm | 10,907 | 5,804 | 14,719 | 10,477 |
| lb/hr | 1.13E-04 | 5.60E-05 | 1.54E-04 | 1.08E-04 |
| lb/MMBtu | 3.25E-05 | 1.57E-05 | 3.78E-05 | 2.87E-05 |
| lb/ton | 1.34E-04 | 9.50E-05 | 1.69E-04 | 1.33E-04 |
| **Benzo(b)fluoranthene** | | | | |
| ng | 28,500 | 17,400 | 53,900 | 33,267 |
| ng/dscm | 12,585 | 5,871 | 16,290 | 11,582 |
| lb/hr | 1.31E-04 | 5.67E-05 | 1.70E-04 | 1.19E-04 |
| lb/MMBtu | 3.75E-05 | 1.59E-05 | 4.18E-05 | 3.17E-05 |
| lb/ton | 1.55E-04 | 9.61E-05 | 1.87E-04 | 1.46E-04 |
| **Benzo(k)fluoranthene** | | | | |
| ng | 9,130 | 5,830 | 19,400 | 11,453 |
| ng/dscm | 4,032 | 1,967 | 5,863 | 3,954 |
| lb/hr | 4.19E-05 | 1.90E-05 | 6.13E-05 | 4.08E-05 |
| lb/MMBtu | 1.20E-05 | 5.32E-06 | 1.50E-05 | 1.08E-05 |
| lb/ton | 4.95E-05 | 3.22E-05 | 6.74E-05 | 4.97E-05 |

**Table 4-10**
**PAH Emissions Results Continued-**
**Air Curtain Incinerator**

| Parameter/Units | Run 1 | Run 2 | Run 3 | Average |
|---|---|---|---|---|
| **Benzo(e)pyrene** | | | | |
| ng | 12,800 | 8,290 | 23,800 | 14,963 |
| ng/dscm | 5,652 | 2,797 | 7,193 | 5,214 |
| lb/hr | 5.88E-05 | 2.70E-05 | 7.52E-05 | 5.37E-05 |
| lb/MMBtu | 1.69E-05 | 7.57E-06 | 1.85E-05 | 1.43E-05 |
| lb/ton | 6.95E-05 | 4.58E-05 | 8.27E-05 | 6.60E-05 |
| **Benzo(a)pyrene (CCC)** | | | | |
| ng | 12,800 | 6,020 | 28,900 | 15,907 |
| ng/dscm | 5,652 | 2,031 | 8,735 | 5,473 |
| lb/hr | 5.88E-05 | 1.96E-05 | 9.14E-05 | 5.66E-05 |
| lb/MMBtu | 1.69E-05 | 5.50E-06 | 2.24E-05 | 1.49E-05 |
| lb/ton | 6.95E-05 | 3.32E-05 | 1.00E-04 | 6.77E-05 |
| **Perylene** | | | | |
| ng | 1,080 | 395 | 2,690 | 1,388 |
| ng/dscm | 476.9 | 133.3 | 813.0 | 474.4 |
| lb/hr | 4.96E-06 | 1.29E-06 | 8.51E-06 | 4.92E-06 |
| lb/MMBtu | 1.42E-06 | 3.61E-07 | 2.09E-06 | 1.29E-06 |
| lb/ton | 5.86E-06 | 2.18E-06 | 9.35E-06 | 5.80E-06 |
| **Indeno(1,2,3-cd)pyrene** | | | | |
| ng | 8,720 | 8,260 | 23,200 | 13,393 |
| ng/dscm | 3,851 | 2,787 | 7,012 | 4,550 |
| lb/hr | 4.01E-05 | 2.69E-05 | 7.34E-05 | 4.68E-05 |
| lb/MMBtu | 1.15E-05 | 7.54E-06 | 1.80E-05 | 1.23E-05 |
| lb/ton | 4.73E-05 | 4.56E-05 | 8.06E-05 | 5.78E-05 |
| **Dibenz(a,h)anthracene** | | | | |
| ng | 873.0 | 775.0 | 2,600 | 1,416 |
| ng/dscm | 385.5 | 261.5 | 785.8 | 477.6 |
| lb/hr | 4.01E-06 | 2.52E-06 | 8.22E-06 | 4.92E-06 |
| lb/MMBtu | 1.15E-06 | 7.08E-07 | 2.02E-06 | 1.29E-06 |
| lb/ton | 4.74E-06 | 4.28E-06 | 9.03E-06 | 6.02E-06 |

**Table 4-10**
**PAH Emissions Results Continued-**
**Air Curtain Incinerator**

| Parameter/Units | Run 1 | Run 2 | Run 3 | Average |
|---|---|---|---|---|
| **Benzo(g,h,i) perylene** | | | | |
| ng | 13,000 | 9,180 | 29,700 | 17,293 |
| ng/dscm | 5,741 | 3,098 | 8,976 | 5,938 |
| lb/hr | 5.97E-05 | 2.99E-05 | 9.39E-05 | 6.12E-05 |
| lb/MMBtu | 1.71E-05 | 8.38E-06 | 2.30E-05 | 1.62E-05 |
| lb/ton | 7.05E-05 | 5.07E-05 | 1.03E-04 | 7.48E-05 |

# 5.0 Internal QA/QC Activities

## 5.1 QA/QC Audits

The meter boxes and sampling trains used during sampling performed within the requirements of their respective methods. All post-test leak checks, minimum metered volumes, minimum sample durations, and percent isokinetics met the applicable QA/QC criteria.

EPA Method 3A, 6C, 7E, and 10 calibration audits were all within the measurement system performance specifications for the calibration drift checks, system calibration bias checks, and calibration error checks.

EPA Method 25A FIA calibration audits were within the measurement system performance specifications for the calibration drift checks and calibration error checks.

The $NO_2$ to NO converter efficiency check of the analyzer was conducted per the procedures in EPA Method 7E, Section 8.2.4. The conversion efficiency met the criteria.

ODEQ Method 5 analytical QA/QC results are included in the laboratory report. The method QA/QC criteria were met. An EPA Method 5 reagent blank was analyzed. The maximum allowable amount that can be subtracted is 0.001% of the weight of the acetone used. The blank did not exceed the maximum residue allowed.

EPA Method 29 analytical QA/QC results are included in the laboratory report. The method QA/QC criteria were met.

EPA Method 23 analytical QA/QC results are included in the laboratory report. The method QA/QC criteria were met.

EPA SW 846 Method 0010 analytical QA/QC results are included in the laboratory report. The method QA/QC criteria were met, except where noted in Section 5.2.

NCASI Method 99.02 analytical QA/QC results are included in the laboratory report. The method QA/QC criteria were met, except where noted in Section 5.2.

EPA Method TO-15 and Method 8260B analytical QA/QC results are included in the laboratory reports. The method QA/QC criteria were met.

## 5.2 QA/QC Discussion

The lab noted that while the Method 0010 samples were diluted by a factor of 60 or 120 prior to analysis, that naphthalene saturated the detector for all three runs and that further dilution would have resulted in loss of ES. Analyte concentrations that saturate the instrument's detector result in a flat-topped peak and the results will have less accuracy than values within the calibration range. Further notes can be found in the QC and Reporting Notes section of the lab report for that method and the chromatograms can be found in Appendix C.3. The samples were received above 4°C as required by the method.

AAC calculated the Run 3B spike recoveries for the NCASI 99.02 formaldehyde and acrolein impinger samples. The acrolein did not meet the spike recovery criteria. Montrose calculated the Run 2A/2B duplicate data and none of the compounds met the duplicate criteria.

## 5.3 Quality Statement

Montrose is qualified to conduct this test program and has established a quality management system that led to accreditation with ASTM Standard D7036-04 (Standard Practice for Competence of Air Emission Testing Bodies). Montrose participates in annual functional assessments for conformance with D7036-04 which are conducted by the American Association for Laboratory Accreditation (A2LA). All testing performed by Montrose is supervised on site by at least one Qualified Individual (QI) as defined in D7036-04 Section 8.3.2. Data quality objectives for estimating measurement uncertainty within the documented limits in the test methods are met by using approved test protocols for each project as defined in D7036-04 Sections 7.2.1 and 12.10. Additional quality assurance information is included in the report appendices. The content of this report is modeled after the EPA Emission Measurement Center Guideline Document (GD-043).

# Appendix A
# Field Data and Calculations

# Appendix A.1
# Sampling Locations

MONTROSE AIR QUALITY SERVICES

# EPA METHOD 1 FIELD DATA

**Project Information**

Client / Facility: ODEQ
Source / Location: ACT Forest Grove, OR
Date: 5/22/23
Data taken by: NW

**Circular/Elliptical Duct Measurements**

CEMS

| | Port 1 | Port 2 | Port 3 | Port 4 |
|---|---|---|---|---|
| Far wall to outside of port distance, in.: | 15.25 | 15.25 | 15.25 | 15.25 |
| Port length, in. (confirm flush with inside wall): | 3.25 | 3.25 | 3.25 | 3.25 |
| Duct inner diameter, in.: | 12 | 12 | 12 | 12 |
| Port diameter, in.: | 3 | 3 | 3 | 2 |
| Upstream distance (A), in.: | 96 | | | |
| Downstream distance (B), in.: | 96 | | | |
| Number of ports (must be 90° to each other): | 4 | | | |

**Duct Parameters**

Material (steel, fiberglass, PVC): steel
Type of port (flange, npt nipple, etc.): NPT nipple
Orientation (vertical, horizontal, if diagonal specify angle): horizontal ~~vertical~~ NW 5/22/23
Elevation of ports above ground, ft.: 4

Cyclonic flow expected? NO
Pitot ID: 35-2
Manometer ID: MB33
Angle finder / protractor ID: BEF014

Port #1 for cyclonic check

| Traverse point | Outside port distance, in. | Null angle, α |
|---|---|---|
| 1 | 3.8 | 5 |
| 2 | 4.1 | 3 |
| 3 | 4.7 | 6 |
| 4 | 6.4 | 4 |
| 5 | 6.3 | 7 |
| 6 | 7.6 | 2 |
| 7 | 11.0 | 5 |
| 8 | 12.3 | 8 |
| 9 | 13.2 | 2 |
| 10 | 13.9 | 1 |
| 11 | 14.5 | 4 |
| 12 | ~~15.2~~ 14.9 | 7 |
| | | |
| | | |
| | | |
| | | |
| | | |
| | | |
| | | |
| | | |
| | | |
| | | |
| | | |
| | | |
| Average of absolute α | | |

Diagram of duct and sampling location

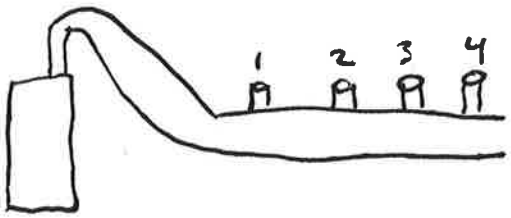


*Example:*

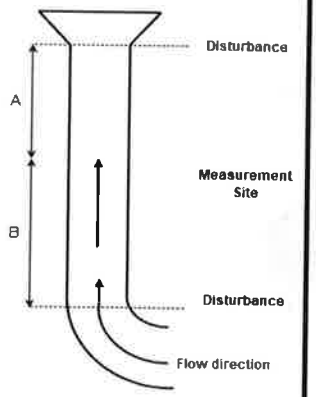


Cross-section sketch showing port locations and numbering
Label the following: port number 1, 2, etc.
north direction or other landmark
flow direction - ⊗ into page ⊙ out of page

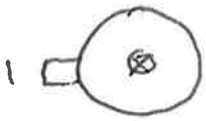


*Example:*

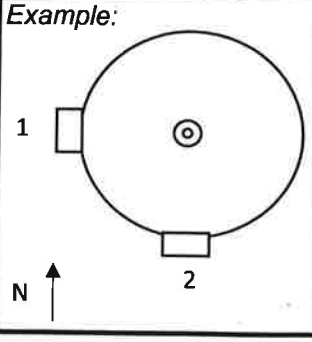


*For stacks having diameters greater than 24 in., no traverse points shall be within 1.00 in. of the stack walls; and for stack diameters equal to or less than 24 in., no traverse points shall be located within 0.50 in. - EPA Method 1 section 11.3.1 & 11.3.2

**If schematics are unavailable, internal width can be estimated by measuring the portion of the port length not visible on the outside of the duct, which would be an estimate of the insulation thickness. Double this distance and subtract it from the outside width.

## *Valley Environmental / Air Curtain Incinerator*
## TRAVERSE POINT LAYOUT (PARTICULATE)
## CIRCULAR STACKS BETWEEN 12 AND 24 INCHES

| | | |
|---|---|---|
| **Stack diameter:** | **12.0** | ***inches*** |
| **Upstream diameter (A):** | **96.0** | ***inches*** |
| **Downstream diameter (B):** | **96.0** | ***inches*** |
| **Port length:** | **3.25** | ***inches*** |
| **Number of ports being used:** | **2** | ***see note*** |
| **Equivalent upstream diameter (A):** | **8.000** | ***Pass*** |
| **Equivalent downstream diameter (B):** | **8.000** | ***Pass*** |
| **All points at least 0.5" from stack wall:** | **0.252** | ***Adjust to 0.5 in.*** |
| **Total points:** | **12** | |
| **Points per port:** | **12** | |

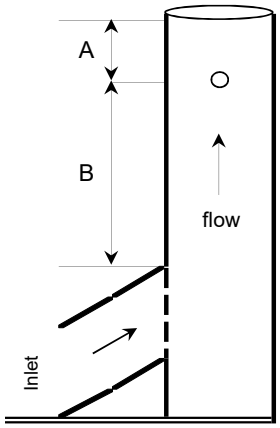


**Typical vertical exhaust stack**

| Point | % Diameter | Inside wall Distance (in) | Outside port Distance (in) |
|---|---|---|---|
| 1 | 2.1 | 0.5 | 3.8 |
| 2 | 6.7 | 0.8 | 4.1 |
| 3 | 11.8 | 1.4 | 4.7 |
| 4 | 17.7 | 2.1 | 5.4 |
| 5 | 25.0 | 3.0 | 6.3 |
| 6 | 35.6 | 4.3 | 7.6 |
| 7 | 64.4 | 7.7 | 11.0 |
| 8 | 75.0 | 9.0 | 12.3 |
| 9 | 82.3 | 9.9 | 13.2 |
| 10 | 88.2 | 10.6 | 13.9 |
| 11 | 93.3 | 11.2 | 14.5 |
| 12 | 97.9 | 11.5 | 14.8 |

**DUCT AREA = 0.785 $ft^2$**

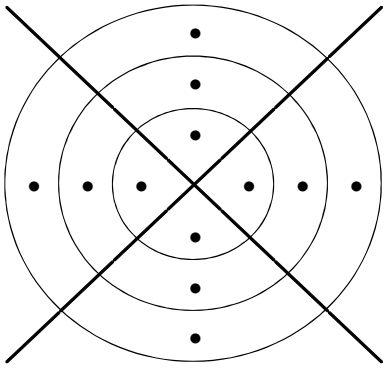

Example: Location of 12 points

Note: No traverse point shall be within 0.5" of the stack walls (see EPA 1 section 11.3.1). Points automatically adjusted to meet this criterion.

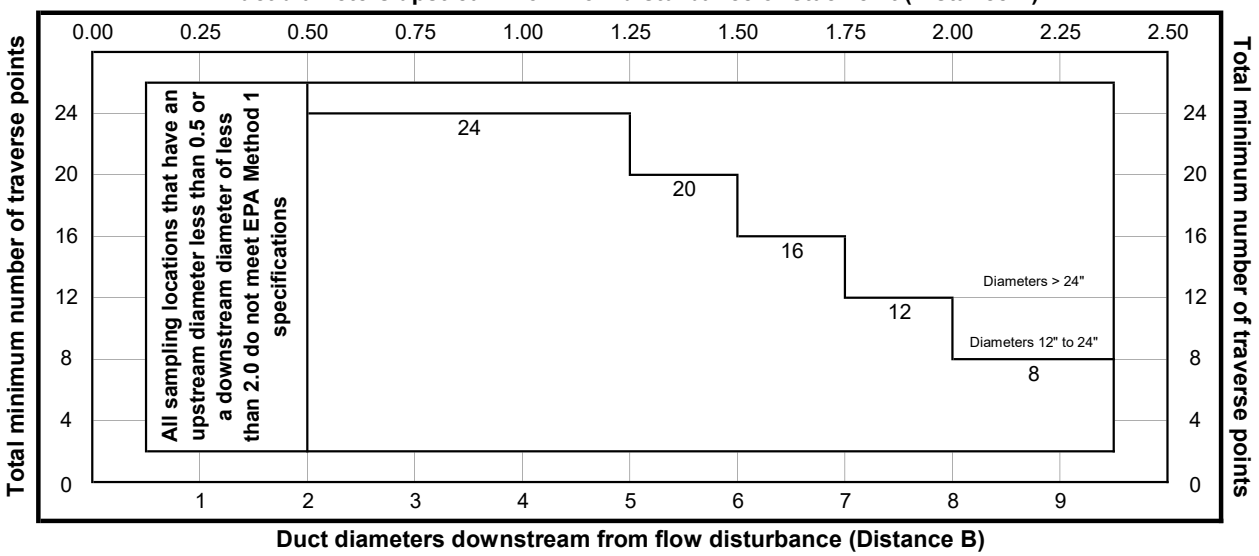

# Appendix A.2
# ODEQ 5 Data Sheets

MONTROSE AIR QUALITY SERVICES

ODEQ Method 5 Field Datasheet (Isokinetic)

Page 1 of 1

**Project Information**
Date 5/23/23 Project # 021372
Customer/Facility ODEQ
Unit ID/Sample Location ACI - Port 1.
Run # 1 Operator MG / NW

**Sampling Conditions** MG 5/23
Static Pressure, in. $H_2O$ ~~-6.2~~ -7.0 Ambient Temp, °F 53°
Barometric Pressure, in. Hg 29.96 Ref. Barometer ID NOAA
Wind Speed / Direction 2E Precipitation, Y (N), type —
Probe / Filter Temp Range, °F 248 ± 25

**Sampling Equipment IDs**
Meterbox ID MB 31
Umbilical ID —
Nozzle ID Q-307
Pitot / Probe ID 007
Manometer ID MB 31
Sensitivity 0.001

**Calibration**
Meterbox Y 0.9953
Meterbox ΔH@, in. $H_2O$ 1.3507
Nozzle diameter, Dn, in. 0.191
Pitot coefficient, Cp .84
Manometer zero and level ☒ yes
K-Factor .703 / .464 / .555

**Equipment Checks**

| | Pre | Mid | Post |
|---|---|---|---|
| Pitot (+), pass @ in. $H_2O$ | ☑ @ 7.0 | ☐ @ | ☒ @ 5.7 |
| Pitot (-), pass @ in. $H_2O$ | ☑ @ 6.8 | ☐ @ | ☒ @ 4.3 |
| Pitot visual inspection | ☑ pass | ☐ pass | ☒ pass |
| Nozzle visual inspection | ☑ pass | ☐ pass | ☒ pass |
| Meter, cfm @ in. Hg | .002 @ 12.0 | @ | 0.003 @ 16.0 |
| Intermediate leak check volume, $ft^3$ | / | / | |

**ALT 011** TC ID:

| | Ambient °F | Ref. °F |
|---|---|---|
| Stack | See | |
| Probe | last | |
| Filter Box | | |
| Filter Exit | Run | |
| Meter outlet | | |
| Impinger Exit | | |
| Other | | |

Ref. Thermometer ID
Continuity Check ☐ Continuity w/ Proper Polarity
Notes:

| Traverse Point # | Elapsed Time | Clock Time 24hr | DGM Reading, Vm, $ft^3$ | Velocity Head, ΔP in $H_2O$ | Orifice Pressure Differential, ΔH Target | ΔH Actual | Stack Temp, °F | Probe Temp, °F | Filter Temp, °F Box | Filter Temp, °F Exit | Impinger Exit Temp, °F | Dry Gas Meter Temperature, °F Inlet | Dry Gas Meter Temperature, °F Outlet | | Pump Vacuum, in. Hg |
|---|---|---|---|---|---|---|---|---|---|---|---|---|---|---|---|
| 1 | 0 | 0950 | 844.500 | 4.0 | 2.81 | 2.8 | 500 | 250 | 254 | 256 | 54 | | 60 | | 5.5 |
| 2 | 15 | | 857.83 | 2.6 | 1.16 | 1.2 | 1050 | 249 | 250 | 254 | 56 | | 5/23/23 MJ 69 | | 4.5 |
| 3 | 30 | | 866.85 | 3.6 | 1.74 | 1.7 | 933 | 250 | 252 | 250 | 57 | | 67 | | 5.5 |
| 4 | 45 | | 877.46 | 3.1 | 1.42 | 1.4 | 1013 | 250 | 254 | 253 | 59 | | 70 | | 6.0 |
| 5 | 60 | | 887.40 | 3.2 | 1.48 | 1.5 | 995 | 250 | 250 | 254 | 60 | | 72 | | 6.5 |
| 6 | 75 | | 897.47 | 3.4 | 1.57 | 1.6 | 998 | 251 | 253 | 251 | 61 | | 75 | | 7.0 |
| 7 | 90 | | 908.08 | 3.6 | 1.99 | 2.0 | 780 | 250 | 251 | 250 | 62 | | 76 | | 8.5 |
| 8 | 105 | | 919.65 | 4.2 | 2.86 | 2.9 | 550 | 249 | 250 | 248 | 63 | | 77 | | 10.5 |
| 9 | 120 | | 933.77 | 3.5 | 1.84 | 1.8 | 845 | 249 | 246 | 258 | 62 | | 78 | | 10.0 |
| 10 | 135 | | 945.38 | 4.2 | 2.91 | 2.9 | 534 | 251 | 252 | 254 | 63 | | 79 | | 14.5 |
| 11 | 150 | | 959.87 | 3.7 | 2.05 | 2.1 | 780 | 250 | 252 | 249 | 64 | | 79 | | 14.0 |
| 12 | 165 | | 973.82 | 3.8 | 2.49 | 2.4 | 612 | 250 | 245 | 261 | 65 | | 80 | | 7.0 |
| | 180 | 1250 | 986.349 | — | — | — | — | — | — | — | — | | — | | — |
| Averages | | | | | | | | | | | | | | | |

QA/QC Check: Completeness ✓ Legibility ✓ Accuracy ✓ Specifications ✓ Checked By BWolfendale Team Leader

001AS-QMS-FM-225

MONTROSE AIR QUALITY SERVICES

ODEQ Method 5 Field Datasheet (Isokinetic)



**Project Information**
Date 5/23/23 Project # 021372
Customer/Facility ODEQ Forest Grove, OR
Unit ID/Sample Location ACI Air Curtain
Run # 2 Operator NW PORT 1

**Sampling Conditions**
Static Pressure, in. $H_2O$ −7.0 Ambient Temp, °F 63
Barometric Pressure, in. Hg 29.96 Ref. Barometer ID NOAA
Wind Speed / Direction 0-5/S Precipitation, Y / (N) type
Probe / Filter Temp Range, °F 248 ± 25

**Sampling Equipment IDs**
Meterbox ID MB31
Umbilical ID —
Nozzle ID Q-307
Pitot / Probe ID 007
Manometer ID MB31
Sensitivity 0.01

**Calibration**
Meterbox Y 0.9953
Meterbox ΔH@, in. $H_2O$ 1.8507
Nozzle diameter, Dn, in. 0.191
Pitot coefficient, Cp 0.84
Manometer zero and level ☒ yes
K-Factor 0.5041

**Equipment Checks**

| | Pre | Mid | Post |
|---|---|---|---|
| Pitot (+), pass @ in. $H_2O$ | ☒ @ 5.7 | ☐ @ | ☒ @ 4.8 |
| Pitot (-), pass @ in. $H_2O$ | ☒ @ 4.3 | ☐ @ | ☒ @ 3.9 |
| Pitot visual inspection | ☒ pass | ☐ pass | ☒ pass |
| Nozzle visual inspection | ☒ pass | ☐ pass | ☒ pass |
| Meter, cfm @ in. Hg | 0.002 @ 15.0 | @ | 0.002 @ 17.5 |
| Intermediate leak check volume, $ft^3$ | / | / | / |

**ALT 011** TC ID:

| | Ambient °F | Ref. °F |
|---|---|---|
| Stack | | see |
| Probe | | last |
| Filter Box | | |
| Filter Exit | | |
| Meter outlet | | Run |
| Impinger Exit | | |
| Other | | |

Ref. Thermometer ID
Continuity Check ☐ Continuity w/ Proper Polarity
Notes:

| Traverse Point # | Elapsed Time | Clock Time 24hr | DGM Reading, Vm, $ft^3$ | Velocity Head, ΔP in $H_2O$ | Orifice Pressure Differential, ΔH Target | ΔH Actual | Stack Temp, °F NW 5/23/23 | Probe Temp, °F | Filter Temp, °F Box | Filter Temp, °F Exit | Impinger Exit Temp, °F | Dry Gas Meter Temperature, °F Inlet | Dry Gas Meter Temperature, °F Outlet | Pump Vacuum, in. Hg |
|---|---|---|---|---|---|---|---|---|---|---|---|---|---|---|
| 1 | 0 | 1410 | 986.507 | 3.8 | 2.04 | 2.0 | 2517/42 | 251 | 253 | 251 | 64 | NA | 76 | 4.0 |
| 2 | 15 | | 998.20 | 3.4 | 1.67 | 1.7 | 856 | 250 | 252 | 255 | 62 | | 77 | 5.0 |
| 3 | 30 | | 1008.97 | 3.2 | 1.35 | 1.4 | 1070 | 250 | 248 | 256 | 63 | | 81 | 4.5 |
| 4 | 45 | | 1018.85 | 3.3 | 1.60 | 1.6 | 873 | 248 | 250 | 248 | 61 | | 85 | 5.5 |
| 5 | 60 | | 1028.99 | 3.1 | 1.22 | 1.2 | 1190 | 250 | 242 | 265 | 60 | | 86 | 6.0 |
| 6 | 75 | | 1038.47 | 3.0 | 1.19 | 1.2 | 1181 | 250 | 245 | 258 | 58 | | 89 | 6.0 |
| 7 | 90 | | 1047.78 | 3.1 | 1.31 | 1.3 | 1092 | 250 | 247 | 255 | 59 | | 91 | 6.5 |
| 8 | 105 | | 1057.45 | 3.3 | 1.38 | 1.4 | 1100 | 249 | 245 | 253 | 57 | | 92 | 7.0 |
| 9 | 120 | | 1067.59 | 3.6 | 1.76 | 1.8 | 887 | 250 | 248 | 251 | 58 | | 92 | 9.0 |
| 10 | 135 | | 1078.96 | 3.8 | 2.02 | 2.0 | 779 | 251 | 250 | 250 | 59 | | 91 | 10.0 |
| 11 | 150 | | 1091.00 | 4.4 | 3.00 | 3.0 | 506 | 250 | 249 | 256 | 61 | | 88 | 13.5 |
| 12 | 165 | | 1105.44 | 4.2 | 2.95 | 3.0 | 475 | 250 | 246 | 251 | 63 | | 86 | 14.5 |
| End | 180 | 1710 | 1119.441 | — | — | — | — | — | — | — | — | | — | — |
| | | | | | | | | | | | | | | |
| | | | | | | | | | | | | | | |
| | | | | | | | | | | | | | | |
| | | | | | | | | | | | | | | |
| | | | | | | | | | | | | | | |
| | | | | | | | | | | | | | | |
| | | | | | | | | | | | | | | |
| | | | | | | | | | | | | | | |
| | | | | | | | | | | | | | | |
| | | | | | | | | | | | | | | |
| | | | | | | | | | | | | | | |
| | | | | | | | | | | | | | | |
| Averages | | | | | | | | | | | | | | |

QA/QC Check: Completeness ✓ Legibility ✓ Accuracy ✓ Specifications ✓ Checked By SWolfendale Team Leader

MONTROSE AIR QUALITY SERVICES

ODEQ Method 5 Field Datasheet (Isokinetic)

Page 1 of 1

**Project Information**

Date 5/24/23 Project # 021372
Customer/Facility ODEQ
Unit ID/Sample Location ACI - PORT 1.
Run # 3 Operator NW/MG

**Sampling Conditions**

Static Pressure, in. $H_2O$ -5.7 Ambient Temp, °F 56°
Barometric Pressure, in. Hg 29.88 Ref. Barometer ID NOAA
Wind Speed / Direction 5S Precipitation, Y / N type —
Probe / Filter Temp Range, °F 248 125

**Sampling Equipment IDs**

Meterbox ID MB31
Umbilical ID —
Nozzle ID Q-307
Pitot / Probe ID 007
Manometer ID MB31
Sensitivity 0.01

**Calibration**

Meterbox Y 0.9953
Meterbox ΔH@, in. $H_2O$ 1.8507
Nozzle diameter, Dn, in. 0.191
Pitot coefficient, Cp 0.84
Manometer zero and level ☒ yes
K-Factor 0.4951

**Equipment Checks**

| | Pre | Mid | Post |
|---|---|---|---|
| Pitot (+), pass @ in. $H_2O$ | ☒ @ 5.0 | ☐ @ | ☑ @ 6.9 |
| Pitot (-), pass @ in. $H_2O$ | ☒ @ 5.5 | ☐ @ | ☑ @ 6.0 |
| Pitot visual inspection | ☒ pass | ☐ pass | ☑ pass |
| Nozzle visual inspection | ☒ pass | ☒ pass | ☑ pass |
| Meter, cfm @ in. Hg | 0.003 @ 15 | @ | 0.003 @ 20.0 |
| Intermediate leak check volume, $ft^3$ | / | / | / |

**ALT 011** TC ID:

| | Ambient °F | Ref. °F |
|---|---|---|
| Stack MB31 | 67.0 | 67.0 |
| Probe 007 | 67.0 | 67.5 |
| Filter Box 751 | 68.0 | 68.0 |
| Filter Exit 700 | 68.0 | 67.0 |
| Meter outlet MB31 | 68.0 | 67.0 |
| Impinger Exit G-42 | 68.0 | 68.0 |
| Other | | |

Ref. Thermometer ID 21072661
Continuity Check ☑ Continuity w/ Proper Polarity

Notes:

| Traverse Point # | Elapsed Time | Clock Time 24hr | DGM Reading, Vm, $ft^3$ | Velocity Head, ΔP in $H_2O$ | Orifice Pressure Differential, ΔH Target | ΔH Actual | Stack Temp, °F | Probe Temp, °F | Filter Temp, °F Box | Filter Temp, °F Exit | Impinger Exit Temp, °F | Dry Gas Meter Temperature, °F Inlet | Dry Gas Meter Temperature, °F Outlet | | Pump Vacuum, in. Hg |
|---|---|---|---|---|---|---|---|---|---|---|---|---|---|---|---|
| 1 | 0 | 925 | 120.210 | 3.4 | 1.72 | 1.7 | 800 | 243 | 260 | 249 | 60 | NA | 63 | | 4.0 |
| 2 | 15 | | 130.85 | 3.1 | 1.53 | 1.5 | 816 | 245 | 248 | 265 | 48 | | 64 | | 4.5 |
| 3 | 30 | | 141.40 | 3.2 | 1.55 | 1.6 | 841 | 252 | 247 | 260 | 49 | | 65 | | 5.0 |
| 4 | 45 | | 152.125 | 3.1 | 1.47 | 1.5 | 816 | 250 | 249 | 262 | 51 | | 72 | | 6.0 |
| 5 | 60 | | 162.73 | 3.0 | 1.42 | 1.4 | 899 | 250 | 246 | 257 | 53 | | 75 | | 6.5 |
| 6 | 75 | | 172.47 | 2.9 | 1.33 | 1.3 | 927 | 251 | 252 | 256 | 55 | | 77 | | 7.0 |
| 7 | 90 | | 182.420 | 2.5 | 1.02 | .90 | 1300 | 250 | 250 | 257 | 50 | | 81 | | 6.0 |
| 8 | 105 | | 190.580 | 3.0 | 1.533 | 1.5 | 787 | 250 | 247 | 253 | 52 | | 83 | | 7.5 |
| 9 | 120 | | 201.490 | 3.2 | 1.92 | 1.9 | 549 | 250 | 246 | 251 | 52 | | 84 | | 8.5 |
| 10 | 135 | | 212.760 | 3.3 | 1.8 | 1.8 | 707 | 249 | 244 | 250 | 54 | | 85 | | 9.0 |
| 11 | 150 | | 224.060 | 2.7 | 1.22 | 1.2 | 945 | 250 | 249 | 255 | 55 | | 86 | | 9.5 |
| 12 | 165 | | 233.900 | 3.8 | 1.33 | 1.3 | 914 | 250 | 247 | 253 | 56 | | 87 | | 10.0 |
| End | 180 | 1225 | 243.960 | | | | | | | | | | | | |
| Averages | | | | | | | | | | | | | | | |

QA/QC Check: Completeness ✓ Legibility ✓ Accuracy ✓ Specifications ✓ Checked By SWolfendale Team Leader SWolfendale

001AS-QMS-FM-225



W006AS-021372-RT-2857

MONTROSE AIR QUALITY SERVICES

ODEQ 5.

**Sample Recovery & Calibration Check Datasheet**

Page 1 of 1

**Project Information**
Date 5/22 – 5/24/23. Project # PROJ-021372.
Customer / Facility ODEQ.
Unit ID / Sample Location ACI – Port 1.
Run # 1–3. Operator SW

**Equipment Identification**
Ref. Thermometer 2.1072.661
Hygrometer —
Field Balance 624
Check Weights 10635.
Calipers 707.

**Balance Audit** (Field balance must be within 0.5g of check weight mass)

| | | | |
|---|---|---|---|
| Date | 5/22/23 | 5/23/23 | 5/24/23 |
| Standard mass, g | 500.0g. | 500.0g. | 500.0g. |
| Field balance mass, g | 499.9g. | 499.8g. | 499.9. |

**Ambient Conditions (Mobile Lab)**
Relative humidity, % —
Temperature, °F —
Mobile lab # TV4.

**Moisture Determination** ODEQ 5.

| | Contents | Run1 Initial | Run1 Final | Run1 Net | Run 2 Initial | Run 2 Final | Run 2 Net | Run 3 Initial | Run 3 Final | Run 3 Net |
|---|---|---|---|---|---|---|---|---|---|---|
| Knockout | | | | | | | | | | |
| Impinger 1 | $H_2O$ | 711.9 | 865.9 | 154.0 | 748.9 | 874.0 | 125.1 | 719.6 | 856.9 | 137.3 |
| Impinger 2 | $H_2O$ | 691.7 | 754.1 | 62.4 | 707.8 | 759.4 | 51.6. | 715.0 | 781.5 | 66.5 |
| Impinger 3 | MT | 616.3 | 628.7 | 12.4. | 625.9 | 638.5 | 12.6. | 644.4 | 670.4 | 26.0 |
| Impinger 4 | | | | | | | | | | |
| Impinger 5 | | | | | | | | | | |
| Impinger 6 | | | | | | | | | | |
| Impinger 7 | | | | | | | | | | |
| Impinger 8 | | | | | | | | | | |
| Silica Gel | SG. | 956.9 | 987.5 | 30.6. | 922.7 | 952.5 | 29.8. | 956.8 | 991.1 | 34.3 |
| Line Rinse | | | | | | | | | | |
| Train Net Gain (Vlc) | | | | 259.4 | | | 219.1 | | | 264.1 |

**Nozzle Measurements** (Difference between any two measurements must not be more than 0.004 in (0.1 mm))

| | | | | | | | |
|---|---|---|---|---|---|---|---|
| Nozzle 1 diameters | ~~0.170~~ | D1 | ~~0.172~~ | D2 | ~~0.170~~ | D3 | ~~0.170~~ Average |
| Nozzle 2 diameters | 0.191 | D1 | 0.190 | D2 | 0.191 | D3 | 0.191. Average |
| Nozzle 3 diameters | | D1 | | D2 | | D3 | Average |

**Nozzle Material** ☑ quartz ☐ glass ☐ steel ☐ titanium ☐ inconel ☐ other
**Probe Type** ☑ heated ☐ unheated ☐ air-cooled ☐ water-cooled ☐ other
**Probe Liner** ☑ quartz ☐ glass ☐ steel ☐ Teflon ☐ other

**Filter Information**
Front Half: ☐ quartz fiber ☑ glass fiber ☐ Teflon ☐ Teflon/quartz ☐ other
Filter Number: Run 1: 22-U427 Run 2: 22-U423 Run 3: 22-U426. Run :
Back Half: ☐ quartz fiber ☐ glass fiber ☐ Teflon ☐ Teflon/quartz ☐ other N/A

**Reagent Information**

| Type | Lot Number |
|---|---|
| DI $H_2O$: | M159-03. |
| ACETONE: | 22030360. |

**Sample Observations**
Run 1: Lots of PM, 120mL $H_2O$ rinse, 150mL ACE
Run 2: Lots of PM. 120mL $H_2O$ rinse, 150mL ACE
Run 3: Lots of PM 120mL $H_2O$ rinse, 150mL ACE

QA/QC Check: Completeness ✓ Legibility ✓ Accuracy ✓ Specifications ✓
Checked by: SWolfendale Team Leader: [signature]

001AS-QMS-FM-226

MONTROSE AIR QUALITY SERVICES

# EPA METHOD 2 - VELOCITY TRAVERSE DATA

**Project Information**

Client / Facility: ODEQ/ACI — Page: 1 of 1

Source / Location: Port 1 ODEQ5 — Method: 2.

Run no. PRETEST PROFILE Date 5/23-5/24 Operator / Assistant SW NW AG PB Project No. PROJ-0

| ALT-011 TC Check | | Equipment Identification | | Ambient Conditions | | Notes |
|---|---|---|---|---|---|---|
| Std. TC ID | See ODEQ sheets. | Pitot ID | 3S-2 | Baro. press., in. Hg | 29.96. / 29.88. | |
| Std. TC temp., °F | | Pitot Cp | 0.84 | Ambient temp., °F | 1) 53. 2) ~~63~~ 56 SAW 5/24 | |
| Stack TC temp., °F | | Manometer ID | 0.001. | | | |
| Continuity check + or - | | Sensitivity | MBS1. | | | |

| Run No. | PRETEST FLOW | PRETEST FLOW | | | |
|---|---|---|---|---|---|
| Start Time | PROFILE. | PROFILE. | | | |
| End Time 5 | 23:0930 – 0940. | 5/24: 900 – 910. | | | |
| Pre-test pitot checks | Leak chk. + 0 @ 4" / - 0 @ 4" | Leak chk. + 0 @ 5.5" / - 0 @ 5" | Leak chk. + @ / - @ | Leak chk. + @ / - @ |
| Leak chk.: in.$H_2O$ @ in. $H_2O$ | | | | |
| Visual: circle one | Visual: aligned / damaged | Visual: aligned / damaged | Visual: aligned / damaged | Visual: aligned / damaged |
| Post-test pitot checks | Leak chk. + 0 @ 4" / - 0 @ 5" | Leak chk. + 0 @ 4" / - 0 @ 5" | Leak chk. + @ / - @ | Leak chk. + @ / - @ |
| Leak chk.: in.$H_2O$ @ in. $H_2O$ | | | | |
| Visual: circle one | Visual: aligned / damaged | Visual: aligned / damaged | Visual: aligned / damaged | Visual: aligned / damaged |

| Traverse Point Port | Point | ΔP inches $H_2O$ | Stack temp. °F | ΔP inches $H_2O$ | Stack temp. °F | ΔP inches $H_2O$ | Stack temp. °F | ΔP inches $H_2O$ | Stack temp. °F |
|---|---|---|---|---|---|---|---|---|---|
| | ~~1~~ | ~~3.0~~ | | 3.1 | | | | | |
| | ~~2~~ | ~~3.3~~ | | 3.5. | | | | | |
| | ~~3~~ | ~~3.6~~ | | 3.7. | | | | | |
| | ~~4~~ | ~~3.7~~ | | 3.8 | | | | | |
| | ~~5~~ | ~~3.6~~ | | 3.8 | | | | | |
| | ~~6~~ | ~~3.6~~ | | 3.7. | | | | | |
| | ~~7~~ | ~~3.6~~ | | 3.6. | | | | | |
| | ~~8~~ | ~~3.5~~ | | 3.5. | | | | | |
| | ~~9~~ | ~~3.4~~ | | 3.5. | | | | | |
| | ~~10~~ | ~~3.1~~ | | 3.0. | | | | | |
| | ~~11~~ | ~~3.0~~ | | 2.7. | | | | | |
| | ~~12~~ | ~~2.9~~ | | 2.7. | | | | | |
| | 1 | 2.6 | | | | | | | |
| | 2 | 3.2 | | | | | | | |
| | 3 | 3.6 | | | | | | | |
| | 4 | 4.0 | – AVG. | | | | | | |
| | 5 | 4.2 | | | | | | | |
| | 6 | 4.4 | | | | | | | |
| | 7 | 4.2 | | | | | | | |
| | 8 | 4.2 | Ts. | | | | | | |
| | 9 | 4.2 | 502 | | | | | | |
| | 10 | 4.1 | | | | | | | |
| | 11 | 3.9 | | | | | | | |
| | 12 | 3.4 | | | | | | | |
| | | | | | | | | | |
| | | | | | | | | | |
| Static (Pg), in. $H_2O$ | | ~~-6.6~~ | -7.0 | -5.7. | | | | | |
| Wet bulb temp., °F | | | | | | | | | |

Comments:

MONTROSE AIR QUALITY SERVICES

# EPA METHOD 2 - VELOCITY TRAVERSE DATA

**Project Information**

Client / Facility: ODEQ / ACI — Page 1 of 1

Source / Location: Port 2, M23 — Method 2.

Run no. PRELIM PROFILE Date 5/23 – 5/24 · Operator / Assistant SW / NW / PB / AG · Project No. PROJ-0

| ALT-011 TC Check | | Equipment Identification | | Ambient Conditions | | Notes |
|---|---|---|---|---|---|---|
| Std. TC ID | see ODEQ sheets. | Pitot ID | 35-2 | Baro. press., in. Hg | 29.96 / 29.88. | |
| Std. TC temp., °F | | Pitot Cp | 0.84. | Ambient temp., °F | 53 / 56. | |
| Stack TC temp., °F | | Manometer ID | MB31 | | | |
| Continuity check + or - | | Sensitivity | 0.001 | | | |

| | | | | | |
|---|---|---|---|---|---|
| Run No. | PRETEST FLOW PROFILE. | PRETEST FLOW PROFILE. | | | |
| Start Time | | | | | |
| End Time | 5/23: 0930-0940. | 5/24: 900-910. | | | |
| Pre-test pitot checks | Leak chk. + 0 @ 4" / - 0 @ 4" | Leak chk. + 0 @ 5.5" / - 0 @ 5" | Leak chk. + _ @ _ / - _ @ _ | Leak chk. + _ @ _ / - _ @ _ |
| Leak chk.: in. $H_2O$ @ in. $H_2O$ | | | | |
| Visual: circle one | Visual: aligned / damaged | Visual: aligned / damaged | Visual: aligned / damaged | Visual: aligned / damaged |
| Post-test pitot checks | Leak chk. + 0 @ 4" / - 0 @ 5" | Leak chk. + 0 @ 4" / - 0 @ 5" | Leak chk. + _ @ _ / - _ @ _ | Leak chk. + _ @ _ / - _ @ _ |
| Leak chk.: in. $H_2O$ @ in. $H_2O$ | | | | |
| Visual: circle one | Visual: aligned / damaged | Visual: aligned / damaged | Visual: aligned / damaged | Visual: aligned / damaged |

| Traverse Point | | ΔP inches $H_2O$ | Stack temp. °F | ΔP inches $H_2O$ | Stack temp. °F | ΔP inches $H_2O$ | Stack temp. °F | ΔP inches $H_2O$ | Stack temp. °F |
|---|---|---|---|---|---|---|---|---|---|
| Port | Point | | | | | | | | |
| 2 | 1 | ~~3.0~~ | | 2.4 | | | | | |
| | 2 | ~~3.4~~ | | 2.7 | | | | | |
| | 3 | ~~3.6~~ | | 3.0 | | | | | |
| | 4 | ~~3.7~~ | | 3.2 | | | | | |
| | 5 | ~~3.8~~ | | 3.4 | | | | | |
| | 6 | ~~3.8~~ | | 3.6. | | | | | |
| | 7 | ~~3.7~~ | | 3.6 | | | | | |
| | 8 | ~~3.5~~ | | 3.5 | | | | | |
| | 9 | ~~3.2~~ | | 3.4 | | | | | |
| | 10 | ~~2.9~~ | | 3.1 | | | | | |
| | 11 | ~~2.6~~ | | 2.8 | | | | | |
| | 12 | ~~2.5~~ | | 3.0. | | | | | |
| | 1 | 2.7 | | | | | | | |
| | 2 | 3.0 | | | | | | | |
| | 3 | 3.3 | | | | | | | |
| | 4 | 3.7 | ← AVG. | | | | | | |
| | 5 | 3.9 | | | | | | | |
| | 6 | 4.1 | | | | | | | |
| | 7 | 4.2 | | | | | | | |
| | 8 | 4.2 | 5. | | | | | | |
| | 9 | 4.1 | 426 | | | | | | |
| | 10 | 3.9 | | | | | | | |
| | 11 | 3.7 | | | | | | | |
| | 12 | 3.6 | | | | | | | |
| | | | | | | | | | |
| | | | | | | | | | |
| Static (Pg), in. $H_2O$ | | | -7.0 | -5.7 | | | | | |
| Wet bulb temp., °F | | | | | | | | | |

3.18

Comments:

MONTROSE AIR QUALITY SERVICES

# EPA METHOD 2 - VELOCITY TRAVERSE DATA

**Project Information**

Client / Facility: ODEQ/AC1 — Page: 1 of 1
Source / Location: Port 3 — Method: 2
Run no. PRELIM PROFILE Date 5/23-5/24 Operator / Assistant SW/NW/AG/PB · Project No. PROJ-0

**ALT-011 TC Check**

Std. TC ID: see
Std. TC temp., °F: QA005
Stack TC temp., °F: sheets.
Continuity check + or -:

**Equipment Identification**

Pitot ID: 35-2
Pitot Cp: 0.84
Manometer ID: MB31
Sensitivity: 0.001

**Ambient Conditions**

Baro. press., in. Hg: 29.88.
Ambient temp., °F: 53
5/24 : 62.

**Notes**

| Run No. | PRETEST FLOW PROFILE | PRETEST FLOW PROFILE. | | |
|---|---|---|---|---|
| Start Time | | | | |
| End Time | 5/23: 0930-0940 | 5/24: 900-910. | | |
| Pre-test pitot checks<br>Leak chk.: in.$H_2O$ @ in. $H_2O$<br>Visual: circle one | Leak chk. + 0 @ 4" / - 0 @ 4"<br>Visual: aligned / damaged | Leak chk. + 0 @ 5.5" / - 0. @ 5"<br>Visual: aligned / damaged | Leak chk. + _____ @ _____ / - _____ @ _____<br>Visual: aligned / damaged | Leak chk. + _____ @ _____ / - _____ @ _____<br>Visual: aligned / damaged |
| Post-test pitot checks<br>Leak chk.: in.$H_2O$ @ in. $H_2O$<br>Visual: circle one | Leak chk. + 0 @ 4" / - 0 @ 5"<br>Visual: aligned / damaged | Leak chk. + 0 @ 4" / - 0. @ 5".<br>Visual: aligned / damaged | Leak chk. + _____ @ _____ / - _____ @ _____<br>Visual: aligned / damaged | Leak chk. + _____ @ _____ / - _____ @ _____<br>Visual: aligned / damaged |

| Traverse Point Port | Point | ΔP inches $H_2O$ | Stack temp. °F | ΔP inches $H_2O$ | Stack temp. °F | ΔP inches $H_2O$ | Stack temp. °F | ΔP inches $H_2O$ | Stack temp. °F |
|---|---|---|---|---|---|---|---|---|---|
| 3 | ~~1~~ | ~~3.1~~ | | ~~2.6.~~ | | | | | |
| | ~~2~~ | ~~3.3~~ | | 3.2 | | | | | |
| | ~~3~~ | ~~3.5~~ | | 3.5 | | | | | |
| | ~~4~~ | ~~3.9~~ | | ~~3.4~~. | | | | | |
| | ~~5~~ | ~~3.9~~ | | 3.6 | | | | | |
| | ~~6~~ | ~~3.9~~ | | 3.6 | | | | | |
| | ~~7~~ | ~~3.8~~ | | 3.4 | | | | | |
| | ~~8~~ | ~~3.7~~ | | 3.4 | | | | | |
| | ~~9~~ | ~~3.4~~ | | 3.4 | | | | | |
| | ~~10~~ | ~~3.0~~ | | 3.2 | | | | | |
| | ~~11~~ | ~~2.8~~ | | 2.8 | | | | | |
| | ~~12~~ | ~~2.5~~ | | 2.6. | | | | | |
| | 1 | 2.9 | | | | | | | |
| | 2 | 3.2 | | | | | | | |
| | 3 | 3.5 | | | | | | | |
| | 4 | 4.0 - AVG. | | | | | | | |
| | 5 | 4.5 | | | | | | | |
| | 6 | 4.6 | | | | | | | |
| | 7 | 4.6 | | | | | | | |
| | 8 | 4.6 | | | | | | | |
| | 9 | 4.4 | 15. | | | | | | |
| | 10 | 4.2 | 412 | | | | | | |
| | 11 | 3.9 | | | | | | | |
| | 12 | 3.6 | | | | | | | |
| Static (Pg), in. $H_2O$ | | -7.0 | | -5.5. | | | | | |
| Wet bulb temp., °F | | | | | | | | | |

Comments:

# Appendix A.3
# EPA Method 23 Data Sheets

MONTROSE AIR QUALITY SERVICES

EPA Method 23 Field Datasheet (Isokinetic)

Page 1 of 1

**Project Information**

Date 5/23/23 Project # PROJ-021372

Customer/Facility ODEQ

Unit ID/Sample Location ACT – PORT 2.

Run # 1 Operator PB

**Sampling Conditions**

Static Pressure, in. $H_2O$ -7.0 Ambient Temp, °F 55

Barometric Pressure, in. Hg 29.96 Ref. Barometer ID NOAA

Wind Speed / Direction 3 / SE Precipitation, Y / N type —

Probe / Filter Temp Range, °F 248 ± 25

**Sampling Equipment IDs**

Meterbox ID MB30

Umbilical ID PDX-50-4

Nozzle ID S-17

Pitot / Probe ID 169-NP-6

Manometer ID MB30

Sensitivity .01

**Calibration**

Meterbox Y .9901

Meterbox ΔH@, in. $H_2O$ 1.8162

Nozzle diameter, Dn, in. .17

Pitot coefficient, Cp .84

Manometer zero and level ☐ yes

K-Factor .443

**Equipment Checks**

| | Pre | Mid | Post |
|---|---|---|---|
| Pitot (+), pass @ in. $H_2O$ | ☑ @ 5 | ☐ @ — | ☑ @ 5 |
| Pitot (-), pass @ in. $H_2O$ | ☑ @ 6 | ☐ @ — | ☑ @ 5 |
| Pitot visual inspection | ☑ pass | ☐ pass | ☑ pass |
| Nozzle visual inspection | ☑ pass | ☐ pass | ☑ pass |
| Meter, cfm @ in. Hg | .003 @ 11 | @ — | .001 @ 15 |

Intermediate leak check volume, $ft^3$ / /

**ALT 011**

| TC ID: | Ambient °F | Ref. °F |
|---|---|---|
| Stack 169-NP-6 | | |
| Probe 169-NP-6 | | |
| Filter Box 750 | | |
| Filter Exit EE-3 | | |
| Meter outlet MB30 | | |
| Impinger Exit 305 | | |
| Other XAD | | |

Ref. Thermometer ID

Continuity Check ☐ Continuity w/ Proper Polarity

Notes:

| Traverse Point # | Elapsed Time | Clock Time 24hr | DGM Reading, Vm $ft^3$ | Velocity Head, ΔP in $H_2O$ | Orifice Pressure Differential, ΔH Target | ΔH Actual | Stack Temp, °F | Probe Temp, °F | Filter Temp, °F Box | Filter Temp, °F Exit | Impinger Exit Temp, °F | Dry Gas Meter Temperature, °F Inlet | Dry Gas Meter Temperature, °F Outlet | XAD | Pump Vacuum, in. Hg |
|---|---|---|---|---|---|---|---|---|---|---|---|---|---|---|---|
| 1 | 0 | 0950 | ~~500.843~~ 500.843 | 3.7 | 1.63 | 1.6 | ~~252~~ 252 | 252 | 253 | 272 | 51 | | 59 | 61 | 4 |
| 2 | 15 | | 509.15 | 2.5 | .707 | .71 | 1000 | 249 | 220 | 237 | 54 | | 61 | 65 | 4 |
| 3 | 30 | | 516.12 | 2.9 | .853 | .85 | 946 | 250 | 189 | 261 | 54 | | 65 | 66 | 4.5 |
| 4 | 45 | | 523.61 | 2.6 | .715 | .72 | 1006 | 250 | 204 | 257 | 58 | | 70 | 65 | 4.5 |
| 5 | 60 | | 530.67 | 2.6 | .78 | .78 | 998 | 250 | 210 | 246 | 56 | | 75 | 65 | 5 |
| 6 | 75 | | 537.94 | 2.8 | .78 | .79 | 1018 | 250 | 201 | 241 | 55 | | 78 | 63 | 5 |
| 7 | 90 | | 545.85 | 3.1 | 1.06 | 1.1 | 730 | 250 | 206 | 254 | 57 | | 82 | 63 | 6 |
| 8 | 105 | | 555.11 | 3.6 | 1.52 | 1.5 | 529 | 250 | 210 | 254 | 57 | | 85 | 61 | 8 |
| 9 | 120 | | 565.66 | 2.8 | 1.15 | 1.2 | 855 | 250 | 208 | 255 | 56 | | 87 | 60 | 9 |
| 10 | 135 | | 575.39 | 3.6 | 1.54 | 1.5 | 525 | 250 | 204 | 253 | 56 | | 89 | 60 | 10 |
| 11 | 150 | | 585.40 | 3.1 | 1.10 | 1.10 | 702 | 250 | 198 | 253 | 56 | | 91 | 60 | 10.5 |
| 12 | 165 | | 594.99 | 3.4 | 1.33 | 1.3 | 622 | 250 | 193 | 254 | 57 | | 91 | 61 | 10 |
| | 180 | 1250 | 604.573 | | | | | | | | | | | | |
| Averages | | | | | | | | | | | | | | | |

QA/QC Check: Completeness ✓ Legibility ✓ Accuracy ✓ Specifications ✓ Checked By SWolfendale Team Leader SWolfendale

001AS-QMS-FM-225

MONTROSE AIR QUALITY SERVICES

EPA Method 23 Field Datasheet (Isokinetic)

Page 1 of 1

**Project Information**

Date 5/23/23 Project # PRO)-021372

Customer/Facility ODEQ

Unit ID/Sample Location ACI - PORT 2.

Run # 2 Operator YB

**Sampling Conditions**

Static Pressure, in. $H_2O$ -7.0 Ambient Temp, °F 63

Barometric Pressure, in. Hg 29.96 Ref. Barometer ID NOAA

Wind Speed / Direction 4/5 Precipitation, Y / (N), type —

Probe / Filter Temp Range, °F 248 ± 25

**Sampling Equipment IDs**

Meterbox ID MB30

Umbilical ID PD1-50-4

Nozzle ID G-17

Pitot / Probe ID 169-NP-6

Manometer ID MB30

Sensitivity .01

**Calibration**

Meterbox Y .9801

Meterbox ΔH@, in. $H_2O$ 1.8167

Nozzle diameter, Dn, in. .17

Pitot coefficient, Cp .84

Manometer zero and level ☑ yes

K-Factor

**Equipment Checks**

| | Pre | Mid | Post |
|---|---|---|---|
| Pitot (+), pass @ in. $H_2O$ | ☑ @ 4 | ☐ @ — | ☒ @ 5 |
| Pitot (-), pass @ in. $H_2O$ | ☑ @ 6 | ☐ @ — | ☒ @ 4 |
| Pitot visual inspection | ☑ pass | ~~☐ pass~~ | ☒ pass |
| Nozzle visual inspection | ☑ pass | ~~☐ pass~~ | ☒ pass |
| Meter, cfm @ in. Hg | .041 @ 17 | @ — | 0,102@18 |
| Intermediate leak check volume, $ft^3$ | / | / | |

**ALT 011** TC ID:

| | Ambient °F | Ref. °F |
|---|---|---|
| Stack 169-NP-6 | | |
| Probe 169-NP-6 | | |
| Filter Box 250 | | |
| Filter Exit EE-3 | | |
| Meter outlet MB30 | | |
| Impinger Exit 305 | | |
| Other XAD | | |

Ref. Thermometer ID

Continuity Check ☐ Continuity w/ Proper Polarity

Notes:

| Traverse Point # | Elapsed Time | Clock Time 24hr | DGM Reading, Vm, $ft^3$ | Velocity Head, ΔP in $H_2O$ | Orifice Pressure Differential, ΔH Target | Orifice Pressure Differential, ΔH Actual | Stack Temp, °F | Probe Temp, °F | Filter Temp, °F Box | Filter Temp, °F Exit | Impinger Exit Temp, °F | Dry Gas Meter Temperature, °F Inlet | Dry Gas Meter Temperature, °F Outlet | XAD | Pump Vacuum, in. Hg |
|---|---|---|---|---|---|---|---|---|---|---|---|---|---|---|---|
| 1 | 0 | 1410 | 612.751 | 3.0 | .94 | .94 | 850 | 251 | 250 | 270 | 65 | | 86 | 56 | 3 |
| 2 | 15 | | 620.75 | 2.3 | .72 | .72 | 997 | 250 | 231 | 267 | 62 | | 86 | 53 | 4 |
| 3 | 30 | | 627.95 | 2.2 | .585 | .59 | 1065 | 251 | 240 | 272 | 62 | | 88 | 59 | 4 |
| 4 | 45 | | 634.80 | 2.1 | .744 | .74 | 858 | 249 | 210 | 257 | 63 | | 90 | 54 | 5 |
| 5 | 60 | | 642.38 | 2.1 | .525 | .53 | 1190 | 250 | 190 | 256 | 64 | | 96 | 64 | 5 |
| 6 | 75 | | 648.97 | 2.2 | .603 | .60 | 1046 | 250 | 194 | 260 | 58 | | 96 | 55 | 6 |
| 7 | 90 | | 655.99 | 2.2 | .5801 | .59 | 1082 | 250 | 191 | 253 | 59 | | 98 | 56 | 6 |
| 8 | 105 | | 662.80 | 2.3 | .617 | .61 | 1100 | 250 | 186 | 255 | 58 | | 100 | 56 | 6 |
| 9 | 120 | | 669.72 | 2.6 | .814 | .81 | 870 | 250 | 184 | 258 | 58 | | 101 | 59 | 8 |
| 10 | 135 | | 677.72 | 2.6 | .821 | .83 | 767 | 250 | 190 | 253 | 59 | | 102 | 61 | 9 |
| 11 | 150 | | 686.29 | 3.3 | 1.46 | 1.5 | 483 | 250 | 186 | 248 | 58 | | 102 | 61 | 15 |
| 12 | 165 | | 697.00 | 3.4 | 1.54 | 1.5 | 455 | 250 | 188 | 252 | 57 | | 94 | 55 | 16 |
| | 180 | 1710 | 707.921 | | | | | | | | | | | | |
| Averages | | | | | | | | | | | | | | | |

QA/QC Check: Completeness / Legibility / Accuracy / Specifications / Checked By S Wolfendale Team Leader S Wolfendale

001AS-QMS-FM-225

63 of 489

W006AS-021372-RT-2857

MONTROSE AIR QUALITY SERVICES

EPA Method 23 Field Datasheet (Isokinetic)



**Project Information**
Date 5/24/23 Project # Proj-021372
Customer/Facility ODEQ
Unit ID/Sample Location ACI - PORT 2.
Run # 3 Operator PB

**Sampling Conditions**
Static Pressure, in. $H_2O$ -5.5 Ambient Temp, °F 56
Barometric Pressure, in. Hg 29.88 Ref. Barometer ID WOAA
Wind Speed / Direction 5/S Precipitation, Y (N) type —
Probe / Filter Temp Range, °F 248±25

**Sampling Equipment IDs**
Meterbox ID MB30
Umbilical ID PDX-50-3
Nozzle ID Q-17
Pitot / Probe ID 169-NP-6
Manometer ID MB30
Sensitivity .01

**Calibration**
Meterbox Y .9801
Meterbox ΔH@, in. $H_2O$ 1.8162
Nozzle diameter, Dn, in. .17
Pitot coefficient, Cp .84
Manometer zero and level ☑ yes
K-Factor

**Equipment Checks**

| | Pre | Mid | Post |
|---|---|---|---|
| Pitot (+), pass @ in. $H_2O$ | ☑ @ 4 | ☐ @ | ☑ @ 5 |
| Pitot (-), pass @ in. $H_2O$ | ☑ @ 4 | ☐ @ | ☑ @ 4.5 |
| Pitot visual inspection | ☑ pass | ☐ pass | ☑ pass |
| Nozzle visual inspection | ☑ pass | ☐ pass | ☑ pass |
| Meter, cfm @ in. Hg | .001 @ 12 | @ | .001 @ 13 |
| Intermediate leak check volume, $ft^3$ | / | / | |

**ALT 011** TC ID:

| | Ambient °F | Ref. °F |
|---|---|---|
| Stack 169-NP-6 | 69 | 68 |
| Probe 169-NP-6 | 69 | 68 |
| Filter Box 750 | 69 | 69 |
| Filter Exit FE-3 | 67 | 69 |
| Meter outlet MB30 | 69 | 69 |
| Impinger Exit 305 | 69 | 68 |
| Other XAD | 69 | 69 |

Ref. Thermometer ID 211072661
Continuity Check ☑ Continuity w/ Proper Polarity
Notes:

| Traverse Point # | Elapsed Time | Clock Time 24hr | DGM Reading, Vm, $ft^3$ | Velocity Head, ΔP in $H_2O$ | Orifice Pressure Differential, ΔH Target | Orifice Pressure Differential, ΔH Actual | Stack Temp, °F | Probe Temp, °F | Filter Temp, °F Box | Filter Temp, °F Exit | Impinger Exit Temp, °F | Dry Gas Meter Temperature, °F Inlet | Dry Gas Meter Temperature, °F Outlet | XAD | Pump Vacuum, in. Hg |
|---|---|---|---|---|---|---|---|---|---|---|---|---|---|---|---|
| 1 | 0 | 925 | 727.109 | 2.5 | .72 | .72 | 888 | 250 | 255 | 230 | 66 | | 62 | 65 | 3 |
| 2 | 15 | | 733.23 | 3.4 | 1.02 | 1.0 | 935 | 251 | 210 | 238 | 49 | | 65 | 65 | 5 |
| 3 | 30 | | 742.44 | 3.5 | .98 | .98 | 929 | 249 | 209 | 245 | 55 | | 69 | 66 | 8 |
| 4 | 45 | | 751.91 | 3.3 | .93 | .93 | 931 | 250 | 204 | 262 | 62 | | 73 | 55 | 6 |
| 5 | 60 | | 761.14 | 3.2 | .88 | .88 | 893 | 250 | 214 | 272 | 63 | | 78 | 57 | 6 |
| 6 | 75 | | 769.12 | 3.0 | .84 | .82 | 1015 | 250 | 196 | 253 | 64 | | 82 | 59 | 6 |
| 7 | 90 | | 776.69 | 2.7 | .62 | .62 | 1292 | 250 | 184 | 244 | 63 | | 87 | 62 | 5 |
| 8 | 105 | | 783.56 | 3.4 | 1.04 | 1.0 | 875 | 250 | 189 | 255 | 61 | | 90 | 57 | 7 |
| 9 | 120 | | 792.30 | 3.8 | 1.40 | 1.4 | 620 | 250 | 190 | 256 | 62 | | 93 | 57 | 9 |
| 10 | 135 | | 802.78 | 3.7 | 1.20 | 1.2 | 770 | 250 | 193 | 248 | 64 | | 96 | 58 | 10 |
| 11 | 150 | | 812.56 | 3.2 | .86 | .86 | 1069 | 250 | 199 | 267 | 58 | | 98 | 59 | 9 |
| 12 | 165 | | 820.67 | 3.4 | .93 | .93 | 1055 | 250 | 210 | 272 | 60 | | 99 | 59 | 9 |
| | 180 | 1225 | 829.297 | | | | | | | | | | | | |
| Averages | | | | | | | | | | | | | | | |

QA/QC Check: Completeness ✓ Legibility ✓ Accuracy ✓ Specifications ✓ Checked By SWoolsundale Team Leader Shyn

001AS-QMS-FM-225

M23.

MONTROSE AIR QUALITY SERVICES

**Sample Recovery & Calibration Check Datasheet**

Page 1 of 1

**Project Information**
Date 5/22 - 5/24/23 · Project # PROJ-021372.
Customer / Facility ODEQ.
Unit ID / Sample Location ACI - PORT 2.
Run # 1-3. Operator SW

**Equipment Identification**
Ref. Thermometer 211072661.
Hygrometer —
Field Balance 624.
Check Weights 10635.
Calipers 707.

**Balance Audit** (Field balance must be within 0.5g of check weight mass)

| | | | |
|---|---|---|---|
| Date | 5/22/23 | 5/23/23 | 5/24/23 |
| Standard mass, g | 500.0g | 499.8g / 500.0g | 500.0g |
| Field balance mass, g | 499.9 | | 499.9g |

**Ambient Conditions (Mobile Lab)**
Relative humidity, % —
Temperature, °F —
Mobile lab # TV4.

**Moisture Determination**

NET 149.3

Run 1 (5/23 SGW) M23. Run 2 Run 3

| Contents | Run 1 Initial | Run 1 Final | Run 1 Net | Run 2 Initial | Run 2 Final | Run 2 Net | Run 3 Initial | Run 3 Final | Run 3 Net |
|---|---|---|---|---|---|---|---|---|---|
| Knockout MT | 354.9 | ~~335.0~~ | 504.2 | 412.7 | 531.3 | | 354.8 | 520.4 | 165.6 |
| Impinger 1 $H_2O$ | 707.4 | 705.0 | -2.4 | 722.4 | 719.9 | | 707.3 | 704.3 | -3.0 |
| Impinger 2 $H_2O$ | 609.1 | 606.1 | -3.0 | 709.8 | 709.7 | | 610.4 | 609.3 | -1.1 |
| Impinger 3 MT | 605.4 | 605.1 | -0.3 | 651.3 | 649.6 | | 606.1 | 605.8 | -0.3 |
| Impinger 4 XAD | 322.9 | 335.0 | 12.1 | 312.1 | 320.3 | | 325.6 | 338.3 | 12.7 |
| Impinger 5 | | | | | | | | | |
| Impinger 6 | | | | | | | | | |
| Impinger 7 | | | | | | | | | |
| Impinger 8 | | | | | | | | | |
| Silica Gel SG. | 942.0 | 965.9 | 23.9. | 929.9 | 956.7 | | 974.4 | 1009.3 | 34.9 |
| Line Rinse | | | | | | | | | |
| Train Net Gain (Vlc) | | | 179.6 | | | | | | 208.8 |

**Nozzle Measurements** (Difference between any two measurements must not be more than 0.004 in (0.1 mm))

| | | | | | | | | |
|---|---|---|---|---|---|---|---|---|
| Nozzle 1 diameters | 0.170 | D1 | 0.171 | D2 | 0.170 | D3 | 0.170. | Average |
| Nozzle 2 diameters | | D1 | | D2 | | D3 | | Average |
| Nozzle 3 diameters | | D1 | | D2 | | D3 | | Average |

**Nozzle Material** ☑ quartz ☐ glass ☐ steel ☐ titanium ☐ inconel ☐ other
**Probe Type** ☑ heated ☐ unheated ☐ air-cooled ☐ water-cooled ☐ other
**Probe Liner** ☑ quartz ☐ glass ☐ steel ☐ Teflon ☐ other

**Filter Information**
Front Half: ☐ quartz fiber ☑ glass fiber ☐ Teflon ☐ Teflon/quartz ☐ other ENTHALPY PREPARED.
Filter Number: Run 1: — Run 2: — Run 3: — Run —
Back Half: ☐ quartz fiber ☐ glass fiber ☐ Teflon ☐ Teflon/quartz ☐ other N/A.

**Reagent Information**

| Type | Lot Number |
|---|---|
| DI $H_2O$ | 572516. |
| ACETONE | 22030360. |
| TOLUENE | P30E725. |

**Sample Observations**
Run 1 XAD ID: 0423-775. 1004
Run 2 XAD ID: 0423-775 1002.
Run 3 XAD ID: 0423-775. 1001
FB XAD ID: 0423-775 1005
RB XAD ID: 0423-775 1003.

QA/QC Check: Completeness ✓ Legibility ✓ Accuracy ✓ Specifications ✓
Checked by: SWolfendale Team Leader: SW

001AS-QMS-FM-226

# Appendix A.4
# EPA SW 846 Method 0010 Data Sheets

MONTROSE AIR QUALITY SERVICES

_____ Method M001 Field Datasheet (Isokinetic)

Page 1 of 1

**Project Information**

Date 5/23/23 Project # PROJ-021372

Customer/Facility ACI ODEQ - PORT 3.

Unit ID/Sample Location Air Curtain Incinerator

Run # 1 Operator AG

**Sampling Conditions**

Static Pressure, in. $H_2O$ -7.0 Ambient Temp, °F 55

Barometric Pressure, in. Hg 29.96 Ref. Barometer ID NOAA

Wind Speed / Direction 3/SE Precipitation, Y / N type None

Probe / Filter Temp Range, °F 248 ± 25 XAD >68

| ALT 011 | TC ID: | Ambient °F | Ref. °F |
|---|---|---|---|
| Stack | | | |
| Probe | | See | |
| Filter Box | | Final | |
| Filter Exit | | Run | |
| Meter outlet | | | |
| Impinger Exit | | | |
| Other | | | |

Ref. Thermometer ID

Continuity Check ☐ Continuity w/ Proper Polarity

Notes:

**Sampling Equipment IDs**

Meterbox ID MB24

Umbilical ID PDX-50-5

Nozzle ID G206

Pitot / Probe ID 17-NP-6

Manometer ID MB24

Sensitivity 0.01

**Calibration**

Meterbox Y 0.9898

Meterbox ΔH@, in. $H_2O$ 1.6698

Nozzle diameter, Dn, in. 0.149

Pitot coefficient, Cp 0.84

Manometer zero and level ☑ yes

K-Factor .239

**Equipment Checks**

| | Pre | Mid | Post |
|---|---|---|---|
| Pitot (+), pass @ in. $H_2O$ | ☑ @ 4.5 | ☐ @ | ☑ @ 4.0 |
| Pitot (-), pass @ in. $H_2O$ | ☑ @ 4.0 | ☐ @ | ☑ @ 4.0 |
| Pitot visual inspection | ☑ pass | ☐ pass | ☑ pass |
| Nozzle visual inspection | ☑ pass | ☐ pass | ☑ pass |
| Meter, cfm @ in. Hg | 0.001 @ 12 | @ | 0.001 @ 14 |
| Intermediate leak check volume, $ft^3$ | | / | / |

| Traverse Point # | Elapsed Time | Clock Time 24hr | DGM Reading, Vm, $ft^3$ | Velocity Head, ΔP in $H_2O$ | Orifice Pressure Differential, ΔH Target | Orifice Pressure Differential, ΔH Actual | Stack Temp, °F | Probe Temp, °F | Filter Temp, °F Box | Filter Temp, °F Exit | Impinger Exit Temp, °F | Dry Gas Meter Temperature, °F Inlet | Dry Gas Meter Temperature, °F Outlet | XAD | Pump Vacuum, in. Hg |
|---|---|---|---|---|---|---|---|---|---|---|---|---|---|---|---|
| 1 | 0 | 0950 | 307.497 | 3.0 | .603 | .60 | 900 | 250 | 248 | 260 | 61 | | 64 | 63 | 4.0 |
| 2 | 15 | | 314.74 | 2.9 | .5916 | .59 | 1000 | 250 | 207 | 263 | 60 | | 67 | 47 | 5.0 |
| 3 | 30 | | 320.61 | 2.9 | .455 | ~~4.6~~ .46 | 925 | 250 | 210 | 262 | 58 | | 68 | 45 | 4.0 |
| 4 | 45 | | 326.64 | 2.5 | .4075 | .41 | 880 | 249 | 191 | 262 | 58 | | 71 | 46 | 4.0 |
| 5 | 60 | | 332.40 | 2.4 | .4128 | .41 | 815 | 249 | 197 | 264 | 58 | | 75 | 47 | 4.0 |
| 6 | 75 | | 338.21 | 2.8 | .456 | .46 | 900 | 250 | 204 | 265 | 56 | | 79 | 48 | 5.0 |
| 7 | 90 | | 344.46 | 3.0 | .573 | .57 | 705 | 249 | 209 | 263 | 56 | | 83 | 48 | 5.5 |
| 8 | 105 | | 351.36 | 3.8 | .8588 | .86 | 530 | 250 | 200 | 266 | 56 | | 85 | 47 | 7.0 |
| 9 | 120 | | 359.73 | 3.0 | .513 | .51 | 850 | 251 | 206 | 268 | 58 | | 87 | 49 | 5.5 |
| 10 | 135 | | 366.38 | 3.7 | .854 | .85 | 515 | 250 | 202 | 267 | 58 | | 89 | 48 | 7.0 |
| 11 | 150 | | 374.77 | 3.3 | .6204 | .62 | 740 | 250 | 195 | 269 | 60 | | 91 | 50 | 7.0 |
| 12 | 165 | | 381.97 | 3.5 | .7455 | .75 | 605 | 250 | 229 | 267 | 62 | | 92 | 51 | 8.0 |
| | 180 | 1250 | 389.775 | | | | | | | | | | | | |
| Averages | | | | | | | | | | | | | | | |

QA/QC Check: Completeness ✓ Legibility ✓ Accuracy ✓ Specifications ✓ Checked By SWolfendale Team Leader [signature]

001AS-QMS-FM-225

MONTROSE AIR QUALITY SERVICES

_____ Method Mod 5D Field Datasheet (Isokinetic)

Page 1 of 1

**Project Information**

Date 5/23/23 Project # PROJ-021372

Customer/Facility ACI ODEQ - PORT 3.

Unit ID/Sample Location Air Curtain Incinerator

Run # 2 Operator AG

**Sampling Conditions**

Static Pressure, in. $H_2O$ -7.0 Ambient Temp, °F 63

Barometric Pressure, in. Hg 29.96 Ref. Barometer ID NOAA

Wind Speed / Direction 4/5 Precipitation, Y / N type None

Probe / Filter Temp Range, °F 248±25 XAD >68

**Sampling Equipment IDs**

Meterbox ID MB24

Umbilical ID PDX-50-3

Nozzle ID G907

Pitot / Probe ID 17-NP-6

Manometer ID MB24

Sensitivity 0.01

**Calibration**

Meterbox Y 0.9898

Meterbox ΔH@, in. $H_2O$ 1.6698

Nozzle diameter, Dn, in. 0.181

Pitot coefficient, Cp 0.84

Manometer zero and level ☑ yes

K-Factor

**Equipment Checks**

| | Pre | Mid | Post |
|---|---|---|---|
| Pitot (+), pass @ in. $H_2O$ | ☑ @ 4.5 | ☐ @ | ☑ @ 4.0 |
| Pitot (-), pass @ in. $H_2O$ | ☑ @ 4.0 | ☐ @ | ☑ @ 4.5 |
| Pitot visual inspection | ☑ pass | ☐ pass | ☑ pass |
| Nozzle visual inspection | ☑ pass | ☐ pass | ☑ pass |
| Meter, cfm @ in. Hg | 0.001 @ 15 | @ | 0.001 @ 22 |

Intermediate leak check volume, $ft^3$ / /

ALT 011 TC ID:

| | Ambient °F | Ref. °F |
|---|---|---|
| Stack 17-NP-4 | | Last |
| Probe 17-NP-6 | | See Run. |
| Filter Box 05-51 | | |
| Filter Exit FE-2 | | |
| Meter outlet MB24 | | |
| Impinger Exit | | |
| Other | | |

Ref. Thermometer ID

Continuity Check ☐ Continuity w/ Proper Polarity

Notes:

| Traverse Point # | Elapsed Time | Clock Time 24hr | DGM Reading, Vm, $ft^3$ | Velocity Head, ΔP in $H_2O$ | Orifice Pressure Differential, ΔH Target | Orifice Pressure Differential, ΔH Actual | Stack Temp, °F | Probe Temp, °F | Filter Temp, °F Box | Filter Temp, °F Exit | Impinger Exit Temp, °F | Dry Gas Meter Temperature, °F Inlet | Dry Gas Meter Temperature, °F Outlet | XAD | Pump Vacuum, in. Hg |
|---|---|---|---|---|---|---|---|---|---|---|---|---|---|---|---|
| 1 | 0 | 1410 | 390.074 | 3.0 | 1.164 | 1.2 | 850 | 249 | 246 | 252 | 65 | | 86 | 48 | 3.0 |
| 2 | 15 | | 399.48 | 2.7 | 1.02 | 1.0 | 875 | 250 | 200 | 263 | 54 | | 86 | 48 | 5.0 |
| 3 | 30 | | 408.21 | 2.5 | .9075 | .81 | 1060 | 251 | 218 | 265 | 58 | | 89 | 53 | 6.0 |
| 4 | 45 | | 416.18 | 2.7 | 1.02 | 1.0 | 840 | 250 | 209 | 261 | 60 | | 92 | 54 | 6.0 |
| 5 | 60 | | 425.07 | 2.4 | .746 | .75 | 1130 | 250 | 213 | 267 | 59 | | 94 | 55 | 6.0 |
| 6 | 75 | | 432.98 | 2.4 | .8136 | .81 | 1000 | 251 | 217 | 269 | 57 | | 97 | 53 | 7.0 |
| 7 | 90 | | 441.07 | 2.5 | .8375 | .84 | 1030 | 250 | 158 | 262 | 57 | | 98 | 53 | 7.0 |
| 8 | 105 | | 449.34 | 2.7 | .9099 | .91 | 1025 | 250 | 178 | 248 | 56 | | 100 | 53 | 7.0 |
| 9 | 120 | | 457.96 | 2.9 | 1.13 | 1.1 | 820 | 251 | 163 | 249 | 56 | | 100 | 52 | 9.0 |
| 10 | 135 | | 467.23 | 2.3 | .9301 | .94 | 770 | 250 | 131 | 247 | 56 | | 100 | 50 | 10.0 |
| 11 | 150 | | 476.11 | 3.8 | 1.97 | 2.0 | 500 | 250 | 169 | 250 | 55 | | 100 | 48 | 16.0 |
| 12 | 165 | | 488.48 | 3.5 | 1.91 | 1.9 | 450 | 251 | 203 | 254 | 59 | | 97 | 50 | 18.0 |
| | 180 | 1710 | 500.741 | | | | | | | | | | | | |
| Averages | | | | | | | | | | | | | | | |

QA/QC Check: Completeness ✓ Legibility ✓ Accuracy ✓ Specifications ✓ Checked By SWolfendale Team Leader

001AS-QMS-FM-225

MONTROSE AIR QUALITY SERVICES

_____ Method M0010 Field Datasheet (Isokinetic)

Page 1 of 1

**Project Information**

Date 5/24/23 Project # PROJ-021372

Customer/Facility ACI/ODEQ - PORT 3.

Unit ID/Sample Location Air curtain Incinerator

Run # 3 Operator AG

**Sampling Conditions**

Static Pressure, in. $H_2O$ -5.5 Ambient Temp, °F 56

Barometric Pressure, in. Hg 29.88 Ref. Barometer ID NOAA

Wind Speed / Direction 5 S Precipitation, Y / N Type None

Probe / Filter Temp Range, °F 248 525 XAD >68

**Sampling Equipment IDs**

Meterbox ID MB24

Umbilical ID PDX-50-5

Nozzle ID G907 APC

Pitot / Probe ID ~~17-NP-6~~

Manometer ID MB24

Sensitivity 0.01

**Calibration**

Meterbox Y 0.9898

Meterbox ΔH@, in. $H_2O$ 1.6698

Nozzle diameter, Dn, in. 0.181

Pitot coefficient, Cp 0.84

Manometer zero and level ☑ yes

K-Factor .394 / 1.386

**Equipment Checks**

| | Pre | Mid | Post |
|---|---|---|---|
| Pitot (+), pass @ in. $H_2O$ | ☑ @ 5.0 | ☐ @ | ☑ @ 4.0 |
| Pitot (-), pass @ in. $H_2O$ | ☑ @ 4.5 | ☐ @ | ☑ @ 4.0 |
| Pitot visual inspection | ☑ pass | ☐ pass | ☑ pass |
| Nozzle visual inspection | ☑ pass | ☐ pass | ☑ pass |
| Meter, cfm @ in. Hg | 0.008 @ 17 | @ | 0.008 @ 12 |
| Intermediate leak check volume, $ft^3$ | / | / | / |

| ALT 011 | TC ID: | Ambient °F | Ref. °F |
|---|---|---|---|
| Stack | 17-NP-6 | 69 | 70 |
| Probe | 17-NP-6 | 69 | 69 |
| Filter Box | OS-51 | 69 | 71 |
| Filter Exit | FE-2 | 69 | 70 |
| Meter outlet | MB24 | 69 | 69 |
| Impinger Exit | I-44 | 69 | 69 |
| Other | | | |

Ref. Thermometer ID 211072661

Continuity Check ☑ Continuity w/ Proper Polarity

Notes: 17-NP-6

6/19 *AG 17-NP-6

| Traverse Point # | Elapsed Time | Clock Time 24hr | DGM Reading, Vm, $ft^3$ | Velocity Head, ΔP in $H_2O$ | Orifice Pressure Differential, ΔH Target | Orifice Pressure Differential, ΔH Actual | Stack Temp, °F | Probe Temp, °F | Filter Temp, °F Box | Filter Temp, °F Exit | Impinger Exit Temp, °F | Dry Gas Meter Temperature, °F Inlet | Dry Gas Meter Temperature, °F Outlet | XAD | Pump Vacuum, in. Hg |
|---|---|---|---|---|---|---|---|---|---|---|---|---|---|---|---|
| 1 | 0 | 0925 | 535.410 | 3.4 | 1.31 | 1.3 | 775 | 250 | 251 | 260 | 50 | | 69 | 47 | 3.0 |
| 2 | 15 | | 544.98 | 3.7 | 1.406 | 1.4 | 800 | 251 | 163 | 270 | 49 | | 71 | 46 | 5.0 |
| 3 | 30 | | 555.33 | 3.5 | 1.22 | 1.2 | 910 | 250 | 199 | 267 | 50 | | 74 | 47 | 5.0 |
| 4 | 45 | | 565.11 | 3.4 | 1.207 | 1.2 | 900 | 250 | 222 | 263 | 52 | | 76 | 47 | 5.5 |
| 5 | 60 | | 574.80 | 3.5 | 1.17 | 1.2 | 980 | 250 | 198 | 260 | 54 | | 79 | 48 | 6.0 |
| 6 | 75 | | 584.45 | 3.3 | 1.1 | 1.1 | 1000 | 250 | 182 | 264 | 55 | | 82 | 49 | 6.0 |
| 7 | 90 | | 594.12 | 3.0 | 0.90 | 0.90 | 1175 | 250 | 212 | 268 | 57 | | 85 | 53 | 6.0 |
| 8 | 105 | | 602.72 | 3.5 | 1.31 | 1.3 | 850 | 250 | 185 | 265 | 57 | | 86 | 48 | 7.0 |
| 9 | 120 | | 613.26 | 3.8 | 1.74 | 1.7 | 620 | 250 | 194 | 257 | 60 | | 89 | 50 | 9.0 |
| 10 | 135 | | 625.23 | 3.8 | 1.54 | 1.5 | 760 | 250 | 175 | 253 | 62 | | 90 | 54 | 9.0 |
| 11 | 150 | | 636.16 | 3.3 | 1.12 | 1.1 | 1000 | 250 | 162 | 249 | 61 | | 91 | 50 | 9.0 |
| 12 | 165 | | 646.27 | 3.5 | 1.183 | 1.2 | 1015 | 251 | 184 | 254 | 62 | | 93 | 54 | 10.0 |
| | 180 | 1225 | 656.380 | | | | | | | | | | | | |
| Averages | | | | | | | | | | | | | | | |

QA/QC Check: Completeness ✓ Legibility ✓ Accuracy ✓ Specifications ✓ Checked By S Wolfendale Team Leader

001AS-QMS-FM-225

MONTROSE AIR QUALITY SERVICES

M0010 -

**Sample Recovery & Calibration Check Datasheet**

Page 1 of 1

**Project Information**

Date 5/22 - 5/24/23. Project # PROJ-021372.

Customer / Facility ODEQ.

Unit ID / Sample Location AC1 - PORT 3.

Run # 1-3 Operator SW

**Equipment Identification**

Ref. Thermometer 211072661.

Hygrometer —

Field Balance 624

Check Weights 10635

Calipers 707.

**Balance Audit** (Field balance must be within 0.5g of check weight mass)

| | | | |
|---|---|---|---|
| Date | 5/22/23 | 5/23/23 | 5/24/23 |
| Standard mass, g | 500.0g | 500.0g | 500.0g |
| Field balance mass, g | 499.9g | 499.8g. | 499.9g. |

**Ambient Conditions (Mobile Lab)**

Relative humidity, % —

Temperature, °F —

Mobile lab # TV 4.

**Moisture Determination**

M0010.

| | Contents | Run1 Initial | Run1 Final | Run1 Net | Run 2 Initial | Run 2 Final | Run 2 Net | Run 3 Initial | Run 3 Final | Run 3 Net |
|---|---|---|---|---|---|---|---|---|---|---|
| Knockout | MT. | 362.3 | 470.6 | 108.3 | 493.3 | 631.0 | 137.7 | 362.6 | 566.9 | 204.3 |
| Impinger 1 | $H_2O$ | 703.5 | 699.8 | -3.7 | 716.1 | 711.9 | -4.2 | 702.6 | 699.8 | -2.8 |
| Impinger 2 | $H_2O$ | 770.0 | 768.0 | -2.0 | 767.3 | 765.7 | -1.6 | 774.9 | 772.2 | -2.7 |
| Impinger 3 | MT. | 617.8 | 618.1 | 0.3 | 531.5 | 531.6 | 0.1 | 618.5 | 619.3 | 0.8. |
| Impinger 4 | XAD. | 279.6 | 296.2. | 16.6 | 277.5 | 285.8 | 8.3 | 321.8 | 334.0 | 12.2. |
| Impinger 5 | | | | | | | | | | |
| Impinger 6 | | | | | | | | | | |
| Impinger 7 | | | | | | | | | | |
| Impinger 8 | | | | | | | | | | |
| Silica Gel | SG. | 897.8 | 921.0 | 23.2 | 921.2 | 947.4 | 26.2 | 935.4 | 976.3 | 40.9 |
| Line Rinse | | | | | | | | | | |
| Train Net Gain (Vlc) | | | | 142.7 | | | 166.5 | | | 252.7 |

**Nozzle Measurements** (Difference between any two measurements must not be more than 0.004 in (0.1 mm))

| | | | | | | | | |
|---|---|---|---|---|---|---|---|---|
| Nozzle 1 diameters | 0.148 | D1 | 0.149 | D2 | 0.148 | D3 | 0.148. | Average |
| Nozzle 2 diameters | 0.170 | D1 | 0.170 | D2 | 0.170 | D3 | 0.170. | Average |
| Nozzle 3 diameters | 0.181 | D1 | 0.180 | D2 | 0.181 | D3 | 0.181 | Average |

**Nozzle Material** ☑ quartz ☐ glass ☐ steel ☐ titanium ☐ inconel ☐ other

**Probe Type** ☑ heated ☐ unheated ☐ air-cooled ☐ water-cooled ☐ other

**Probe Liner** ☑ quartz ☐ glass ☐ steel ☐ Teflon ☐ other

**Filter Information**

Front Half: ☐ quartz fiber ☑ glass fiber ☐ Teflon ☐ Teflon/quartz ☐ other ENTHALPY PREPARED.

Filter Number: Run 1: — Run 2: — Run 3: — Run —

Back Half: ☐ quartz fiber ☐ glass fiber ☐ Teflon ☐ Teflon/quartz ☐ other N/A.

**Reagent Information**

| Type | Lot Number |
|---|---|
| DI $H_2O$: | 572516. |
| ACETONE: | 22030360. |
| TOLUENE: | P30E725. |

**Sample Observations**

Run 1 XAD ID # 0423-776 1009

Run 2 XAD ID # 0423-776 1007

Run 3 XAD ID # 0423-776 1006.

FB XAD ID # 0423-776. 1008.

RB XAD ID # 0423-776 1010.

QA/QC Check: Completeness ✓ Legibility ✓ Accuracy ✓ Specifications ✓

Checked by: SWolfendale Team Leader: SW.

001AS-QMS-FM-226

# Appendix A.5
# EPA Method 29 Data Sheets

MONTROSE AIR QUALITY SERVICES

# EPA Method 29 Field Datasheet (Isokinetic)



**Project Information**
Date 5/24/23 Project # PROJ-021372
Customer/Facility ACI/ODEQ - PORT 2.
Unit ID/Sample Location Air Curtain Incinerator
Run # 1 Operator AG

**Sampling Conditions**
Static Pressure, in. $H_2O$ -6.0 Ambient Temp, °F 70
Barometric Pressure, in. Hg 29.88 Ref. Barometer ID NOAA
Wind Speed / Direction 8/5 Precipitation, Y / (N) type None
Probe / Filter Temp Range, °F 248±25

**Sampling Equipment IDs**
Meterbox ID MB24
Umbilical ID PDX-50-5
Nozzle ID G310
Pitot / Probe ID 17-NP-16
Manometer ID MB24
Sensitivity 0.01

**Calibration**
Meterbox Y 0.9898
Meterbox ΔH@, in. $H_2O$ 1.6698
Nozzle diameter, Dn, in. 0.170
Pitot coefficient, Cp 0.84
Manometer zero and level ☑ yes
K-Factor .317

**Equipment Checks**

| | Pre | Mid | Post |
|---|---|---|---|
| Pitot (+), pass @ in. $H_2O$ | ☑ @ 4.0 | ☐ @ | ☑ @ 4.5 |
| Pitot (-), pass @ in. $H_2O$ | ☑ @ 5.0 | ☐ @ | ☑ @ 4.0 |
| Pitot visual inspection | ☑ pass | ☐ pass | ☑ pass |
| Nozzle visual inspection | ☑ pass | ☐ pass | ☑ pass |
| Meter, cfm @ in. Hg | 0.001@ 13 | @ | 0.001 @ 15 |

Intermediate leak check volume, $ft^3$ / /

**ALT 011** TC ID:

| | Ambient °F | Ref. °F |
|---|---|---|
| Stack | | |
| Probe | See | |
| Filter Box | Final | |
| Filter Exit | Run | |
| Meter outlet | | |
| Impinger Exit | | |
| Other | | |

Ref. Thermometer ID
Continuity Check ☐ Continuity w/ Proper Polarity
Notes:

| Traverse Point # | Elapsed Time | Clock Time 24hr | DGM Reading, Vm, $ft^3$ | Velocity Head, ΔP in $H_2O$ | Orifice Pressure Differential, ΔH Target | Orifice Pressure Differential, ΔH Actual | Stack Temp, °F | Probe Temp, °F | Filter Temp, °F Box | Filter Temp, °F Exit | Impinger Exit Temp, °F | Dry Gas Meter Temperature, °F Inlet | Dry Gas Meter Temperature, °F Outlet | | Pump Vacuum, in. Hg |
|---|---|---|---|---|---|---|---|---|---|---|---|---|---|---|---|
| 1 | 0 | 1418 | 657.374 | 3.0 | 0.879 | 0.88 | 850 | 247 | 250 | | 61 | | 88 | | 3.0 |
| 2 | 15 | | 665.79 | 3.5 | 1.109 | 1.1 | 750 | 251 | 240 | | 57 | | 88 | | 3.0 |
| 3 | 30 | | 675.30 | 3.6 | 1.273 | 1.3 | 690 | 250 | 240 | | 60 | | 90 | | 4.0 |
| 4 | 45 | | 685.39 | 3.4 | 0.97 | 0.97 | 900 | 251 | 240 | | 61 | | 94 | | 4.0 |
| 5 | 60 | | 694.40 | 3.5 | 1.15 | 1.2 | 720 | 250 | 241 | | 62 | | 96 | | 5.0 |
| 6 | 75 | | 704.20 | 3.5 | 1.16 | 1.2 | 705 | 250 | 239 | | 61 | | 96 | | 5.0 |
| 7 | 90 | | 713.68 | 3.3 | 0.798 | 0.80 | 1150 | 250 | 240 | | 63 | | 96 | | 5.0 |
| 8 | 105 | | 722.10 | 3.8 | 1.19 | 1.2 | 780 | 250 | 240 | | 52 | | 96 | | 6.0 |
| 9 | 120 | | 731.78 | 3.9 | 1.17 | 1.2 | 835 | 248 | 241 | | 48 | | 96 | | 8.0 |
| 10 | 135 | | 741.64 | 3.8 | 1.39 | 1.4 | 600 | 248 | 239 | | 50 | | 95 | | 8.0 |
| 11 | 150 | | 752.09 | 3.5 | 1.001 | 1.0 | 900 | 249 | 237 | | 52 | | 95 | | 8.0 |
| 12 | 165 | | 761.25 | 3.3 | 0.99 | 0.99 | 835 | 249 | 240 | | 54 | | 95 | | 8.0 |
| | 180 | 1718 | 770.380 | | | | | | | | | | | | |
| Averages | | | | | | | | | | | | | | | |

QA/QC Check: Completeness ✓ Legibility ✓ Accuracy ✓ Specifications ✓ Checked By SWolfendale Team Leader [signature]

001AS-QMS-FM-225



W006AS-021372-RT-2857

MONTROSE AIR QUALITY SERVICES

EPA Method 29 Field Datasheet (Isokinetic)

Page 1 of 1

**Project Information**

Date 5/25/23 Project # PROJ-021372

Customer/Facility ACI/ODEQ - PORT 2.

Unit ID/Sample Location Air curtain Incinerator

Run # 2 Operator AG

**Sampling Conditions**

Static Pressure, in. $H_2O$ -6.0 Ambient Temp, °F 63

Barometric Pressure, in. Hg 29.72 Ref. Barometer ID NOAA

Wind Speed / Direction 6/S Precipitation, Y (N) type None

Probe / Filter Temp Range, °F 248 ± 25

**Sampling Equipment IDs**

Meterbox ID MB24

Umbilical ID PDX-50-5

Nozzle ID G310

Pitot / Probe ID ~~H7-Alpo4~~ #AG

Manometer ID MB24

Sensitivity 0.01

6/19 #AG 13-NP-6

**Calibration**

Meterbox Y 0.9899

Meterbox ΔH@, in. $H_2O$ 1.6699

Nozzle diameter, Dn, in. .170

Pitot coefficient, Cp 0.84

Manometer zero and level ☑ yes

K-Factor 0.286

**Equipment Checks**

| | Pre | Mid | Post |
|---|---|---|---|
| Pitot (+), pass @ in. $H_2O$ | ☑ @ 4.0 | ☐ @ | ☑ @ 5.0 |
| Pitot (-), pass @ in. $H_2O$ | ☑ @ 4.5 | ☐ @ | ☑ @ 5.0 |
| Pitot visual inspection | ☑ pass | ☐ ~~pass~~ | ☑ pass |
| Nozzle visual inspection | ☑ pass | ☐ ~~pass~~ | ☑ pass |
| Meter, cfm @ in. Hg | 0.001 @ 13 | @ | 0.004 @ 11 |
| Intermediate leak check volume, $ft^3$ | / | / | |

**ALT 011** TC ID:

| | Ambient °F | Ref. °F |
|---|---|---|
| Stack | | |
| Probe | See | |
| Filter Box | Final | |
| Filter Exit | Run | |
| Meter outlet | | |
| Impinger Exit | | |
| Other | | |

Ref. Thermometer ID

Continuity Check ☐ Continuity w/ Proper Polarity

Notes:

| Traverse Point # | Elapsed Time | Clock Time 24hr | DGM Reading, Vm, $ft^3$ | Velocity Head, ΔP in $H_2O$ | Orifice Pressure Differential, ΔH Target | Orifice Pressure Differential, ΔH Actual | Stack Temp, °F | Probe Temp, °F | Filter Temp, °F Box | Filter Temp, °F Exit | Impinger Exit Temp, °F | Dry Gas Meter Temperature, °F Inlet | Dry Gas Meter Temperature, °F Outlet | | Pump Vacuum, in. Hg |
|---|---|---|---|---|---|---|---|---|---|---|---|---|---|---|---|
| 1 | 0 | 0852 | 772.109 | 3.5 | 1.001 | 1.0 | 835 | 250 | 240 | | 58 | | 69 | | 3.0 |
| 2 | 15 | | 780.95 | 3.10 | 0.797 | 0.80 | 980 | 252 | 239 | | 56 | | 71 | | 3.0 |
| 3 | 30 | | 788.96 | 3.0 | 0.744 | 0.74 | 1050 | 249 | 239 | | 57 | | 74 | | 3.0 |
| 4 | 45 | | 796.71 | 3.1 | 0.7626 | 0.76 | 1075 | 250 | 240 | | 58 | | 79 | | 3.5 |
| 5 | 60 | | 804.51 | 3.3 | 0.8481 | 0.85 | 1015 | 251 | 241 | | 59 | | 81 | | 4.0 |
| 6 | 75 | | 812.90 | 3.4 | 1.006 | 1.0 | 825 | 250 | 241 | | 60 | | 84 | | 5.0 |
| 7 | 90 | | 821.95 | 2.9 | 0.623 | 0.62 | 1325 | 250 | 240 | | 55 | | 87 | | 5.0 |
| 8 | 105 | | 829.10 | 3.2 | 0.764 | 0.76 | 1150 | 249 | 250 | | 53 | | 89 | | 5.0 |
| 9 | 120 | | 836.91 | 3.4 | 0.89 | 0.89 | 1000 | 250 | 240 | | 52 | | 90 | | 5.5 |
| 10 | 135 | | 845.62 | 3.3 | 0.8217 | 0.82 | 1090 | 250 | 240 | | 52 | | 92 | | 6.0 |
| 11 | 150 | | 853.95 | 3.7 | 1.21 | 1.2 | 720 | 247 | 240 | | 55 | | 93 | | 6.0 |
| 12 | 165 | | 863.73 | 3.1 | .7378 | .74 | 1165 | 252 | 240 | | 56 | | 93 | | 8.0 |
| | 180 | 1152 | 871.735 | | | | | | | | | | | | |
| Averages | | | | | | | | | | | | | | | |

QA/QC Check: Completeness ✓ Legibility ✓ Accuracy ✓ Specifications ✓ Checked By [signature] Team Leader [signature]

001AS-QMS-FM-225

MONTROSE AIR QUALITY SERVICES

EPA Method 29 Field Datasheet (Isokinetic)

Page 1 of 1

17-NP-6

**Project Information**
Date 5/25/23 Project # PROJ-021372
Customer/Facility ACI/ODEQ → PORT 2.
Unit ID/Sample Location Air curtain Incinerator
Run # 3 Operator AG

**Sampling Conditions**
Static Pressure, in. $H_2O$ -6.0 Ambient Temp, °F 76
Barometric Pressure, in. Hg 29.72 Ref. Barometer ID NOAA
Wind Speed / Direction 9 | S Precipitation, Y / (N) type None
Probe / Filter Temp Range, °F 248 ± 25

**Sampling Equipment IDs**
Meterbox ID MB24
Umbilical ID PDX-50-5
Nozzle ID Q307
Pitot / Probe ID ~~17-NP-4~~ 17-NP-6 *AG 6/19
Manometer ID MB24
Sensitivity 0.01

**Calibration**
Meterbox Y 0.9898
Meterbox ΔH@, in. $H_2O$ 1.6690
Nozzle diameter, Dn, in. .191
Pitot coefficient, Cp 0.84
Manometer zero and level ☑ yes
K-Factor 0.428

**Equipment Checks**

| | Pre | Mid | Post |
|---|---|---|---|
| Pitot (+), pass @ in. $H_2O$ | ☑ @ 4.0 | ☐ @ | ☑ @ 4.5 |
| Pitot (-), pass @ in. $H_2O$ | ☑ @ 5.0 | ☐ @ | ☑ @ 4.0 |
| Pitot visual inspection | ☑ pass | ☐ pass | ☑ pass |
| Nozzle visual inspection | ☑ pass | ☐ pass | ☑ pass |
| Meter, cfm @ in. Hg | 0.006 @ M | @ | 0.006 @ 13.0 |

Intermediate leak check volume, $ft^3$ / /

ALT 011 AG 6/19 TC ID:

| | Ambient °F | Ref. °F |
|---|---|---|
| Stack ~~17-NP-4~~ | 69 | 70 |
| Probe ~~17-NP-4~~ | 69 | 70 |
| Filter Box 750 | | |
| Filter Exit — | — | — |
| Meter outlet MB24 | 69 | 69 |
| Impinger Exit 7 | 69 | 69 |
| Other | | |

Ref. Thermometer ID 211072661
Continuity Check ☑ Continuity w/ Proper Polarity

Notes:

| Traverse Point # | Elapsed Time | Clock Time 24hr | DGM Reading, Vm, $ft^3$ | Velocity Head, ΔP in $H_2O$ | Orifice Pressure Differential, ΔH Target | ΔH Actual | Stack Temp, °F | Probe Temp, °F | Filter Temp, °F Box | Filter Temp, °F Exit | Impinger Exit Temp, °F | Dry Gas Meter Temperature, °F Inlet | Dry Gas Meter Temperature, °F Outlet | | Pump Vacuum, in. Hg |
|---|---|---|---|---|---|---|---|---|---|---|---|---|---|---|---|
| 1 | 0 | 1305 | 873.163 | 3.2 | 1.36 | 1.4 | 960 | 251 | 241 | | 63 | | 91 | | 3.5 |
| 2 | 15 | | 883.71 | 3.9 | 2.04 | 2.0 | 700 | 250 | 240 | | 52 | | 93 | | 5.0 |
| 3 | 30 | | 896.13 | 3.4 | 1.462 | 1.5 | 960 | 247 | 239 | | 53 | | 94 | | 5.0 |
| 4 | 45 | | 907.08 | 3.3 | 1.29 | 1.3 | 1100 | 251 | 240 | | 54 | | 96 | | 5.0 |
| 5 | 60 | | 917.28 | 3.5 | 1.57 | 1.6 | 900 | 251 | 240 | | 55 | | 97 | | 6.0 |
| 6 | 75 | | 928.53 | 3.3 | 1.37 | 1.4 | 1020 | 251 | 240 | | 58 | | 98 | | 7.0 |
| 7 | 90 | | 939.11 | 3.5 | 1.52 | 1.5 | 955 | 249 | 240 | | 60 | | 100 | | 7.0 |
| 8 | 105 | | 949.87 | 3.5 | 1.547 | 1.5 | 940 | 250 | 240 | | 61 | | 102 | | 8.0 |
| 9 | 120 | | 960.63 | 3.4 | 1.373 | 1.4 | 1075 | 250 | 241 | | 62 | | 103 | | 10.0 |
| 10 | 135 | | 971.36 | 3.2 | 1.17 | 1.2 | 1225 | 251 | 240 | | 62 | | 103 | | 10.0 |
| 11 | 150 | | 981.23 | 3.1 | 1.159 | 1.2 | 1200 | 251 | 240 | | 53 | | 103 | | 10.0 |
| 12 | 165 | | 991.024 | 3.0 | 1.014 | 1.0 | 1380 | 250 | 240 | | 54 | | 104 | | 11.0 |
| | 180 | 1605 | ~~1000.361~~ 1000.361 *AG 5/25 | | | | | | | | | | | | |
| Averages | | | | | | | | | | | | | | | |

QA/QC Check: Completeness ✓ Legibility ✓ Accuracy ✓ Specifications ✓ Checked By SWolfendale Team Leader

001AS-QMS-FM-225

M29.

MONTROSE AIR QUALITY SERVICES

**Sample Recovery & Calibration Check Datasheet**

Page 1 of 1

**Project Information**

Date 5/24-5/25. Project # PROJ-021372.

Customer / Facility ODEQ / ACI.

Unit ID / Sample Location

Run # 1-3. Operator SW/NW/PB/AG.

**Equipment Identification**

Ref. Thermometer 211072661.

Hygrometer —

Field Balance 624.

Check Weights 10635.

Calipers 707.

**Balance Audit** (Field balance must be within 0.5g of check weight mass)

| | | | |
|---|---|---|---|
| Date | 5/24/23. | 5/25/23. | |
| Standard mass, g | 500.0g. | 500.0g. | |
| Field balance mass, g | | | |

**Ambient Conditions (Mobile Lab)**

Relative humidity, % —

Temperature, °F —

Mobile lab # TV4.

**Moisture Determination** M29 (5/25 SGW) 54.6 Impinger 1 Run 2 (SGW 5/25)

| | Contents | Run1 Initial | Run1 Final | Run1 Net | Run 2 Initial | Run 2 Final | Run 2 Net | Run 3 Initial | Run 3 Final | Run 3 Net |
|---|---|---|---|---|---|---|---|---|---|---|
| Knockout | MT | 496.2 | 537.2 | 41.0 | 655.3 | 806.7 | 151.4 | 496.9 | ~~556.4~~ | 616.3 |
| Impinger 1 | 5% $HNO_3$ / 10% $H_2O_2$ | 756.1 | 844.2 | 88.1 | ~~756.2~~ | 733.7 | 788.3 | 758.5 | 82.6.9 | 68.4 |
| Impinger 2 | 5% $HNO_3$ / 10% $H_2O_2$ | 742.5 | 771.9 | 29.4 | 712.6 | 725.4 | 12.8 | 742.1 | ~~757.6~~ | 18.5 |
| Impinger 3 | MT | 651.0 | 657.4 | 6.4 | 528.2 | 529.7 | 1.5 | 651.7 | 654.2 | 2.5. |
| Impinger 4 | $KMnO_4$ | 718.2 | 721.8 | 3.6 | 732.1 | 733.0 | 0.9 | 720.3 | ~~895.5~~ | 0.1 |
| Impinger 5 | $KMnO_4$ | 741.8 | 742.6 | 0.8 | 765.5 | 765.1 | -0.4 | 742.6 | 743.1 | 0.5 |
| Impinger 6 | | | | | | | | | | |
| Impinger 7 | | | | | | | | | | |
| Impinger 8 | | | | | | | | | | |
| Silica Gel | SG | 941.8 | 962.8 | 21.0 | 1008.9 | 1022.9 | 14.0 | 962.0 | 984.9 | 27.9 |
| Line Rinse | | | | | | | | | | |
| Train Net Gain (Vlc) | | | | 190.3 | | | 244.8 | | | ~~234.4~~ 234.3 |

119.4

720.4

(SGW 5/25)

**Nozzle Measurements** (Difference between any two measurements must not be more than 0.004 in (0.1 mm))

| | | | | | | | | |
|---|---|---|---|---|---|---|---|---|
| Nozzle 1 diameters | 0.170 | D1 | 0.171 | D2 | 0.170 | D3 | 0.170. | Average |
| Nozzle 2 diameters | 0.190 | D1 | 0.191 | D2 | 0.191 | D3 | 0.191. | Average |
| Nozzle 3 diameters | | D1 | | D2 | | D3 | | Average |

**Nozzle Material** ☑ quartz ☐ glass ☐ steel ☐ titanium ☐ inconel ☐ other

**Probe Type** ☑ heated ☐ unheated ☐ air-cooled ☐ water-cooled ☐ other

**Probe Liner** ☑ quartz ☐ glass ☐ steel ☐ Teflon ☐ other

**Filter Information**

Front Half: ☑ quartz fiber ☐ glass fiber ☐ Teflon ☐ Teflon/quartz ☐ other

Filter Number: Run 1: N/A. Run 2: Run 3: Run :

Back Half: ☐ quartz fiber ☐ glass fiber ☐ Teflon ☐ Teflon/quartz ☐ other N/A.

**Reagent Information**

| Type | Lot Number |
|---|---|
| 5% $HNO_3$ / 10% $H_2O_2$ | : 248-39-6. |
| 0.1N $HNO_3$ | : 248-39-7. |
| 10% $H_2SO_4$ | : 248-39-8. |
| DI $H_2O$ | : M159-03. |
| 8N HCl. | : 121009J |
| $KMnO_4$ | : 201206-2C |

**Sample Observations**

- R1: LOTS of PM IMP 1 discolored
- R2: LOTS of PM, IMP1 discolored
- R3: LOTS of PM, IMP 1 discolored.

QA/QC Check: Completeness ✓ Legibility ✓ Accuracy ✓ Specifications ✓

Checked by: SWolfendale. Team Leader: SW

QUARTZ FILTER LOT: 20322718.

001AS-QMS-FM-226

# Appendix A.6
# NCASI 99.02 Data Sheets

MONTROSE AIR QUALITY SERVICES

# LOW-FLOW OR CRITICAL ORIFICE SAMPLE TRAIN DATA

**Project Information**

Client / Facility: ODEQ
Source / Location: ACI - PORT 3. Forest grove, OR
Run no.: 1
Page: 1 of 1
Method: NCASI 99.02
Date: 5/24/23 Operator / Assistant: NW
Project No.: 021372

**Equipment Identification**

Meter console ID: LFCB10
Critical orifice ID: —
Rotameter ID: —
Stack TC ID: 17-NP-4
Filter TC ID: 138
Micromanometer ID: LFCB10
Sensitivity, in. $H_2O$: 0.001

**Calibration**

Side A Meter Yd: 0.9901
Side B Meter Yd: 0.9963
Orifice choked flow rate:

**ALT-011 TC Check**

Std. TC ID:
Std. TC temp., °F: See
Stack TC temp., °F:
Continuity check + or -: Test Run

**Pre-Test Equipment Checks - fill in only those required by the test method being performed**

Meter leak check: liter @ in. Hg — Side A ____ @ ____ Side B 0.000 @ 22
Canister/orifice: 2 minutes, in. Hg before/after — Side A ____ / ____ Side B / can 30 / 30
Sample flow rate check, cc/min 1 ____ 2 ____ 3 ____ 4 ____ 5 ____ Avg ____

**Post-Test Equipment Checks - fill in only those required by the test method being performed**

Meter leak check: liter @ in. Hg — Side A ____ @ ____ Side B 0.000 @ 21
Canister/orifice: 2 minutes, in. Hg before/after — Side A ____ / ____ Side B 10 / 10
Sample flow rate check, cc/min 1 ____ 2 ____ 3 ____ 4 ____ 5 ____ Avg ____
Other:

**Test / Sampling Parameters**

Run duration, min.: 180
No. of traverse pts.: 1
Time per point, min.: 180
Probe/filter range, °F: 248±25
Imp. outlet max., °F: —
Sample rate, cc/min: 400

**Ambient / Stack Gas Conditions**

Baro. press., in. Hg: 29.88
Ambient temp., °F: 75
Static ($P_g$), in. $H_2O$: -6.0
Dry bulb temp., °F: —
Wet bulb temp., °F: —

**Comments:**

Pause due to pump over heating

**Impingers**

| | Initial, g | Final, g | Difference |
|---|---|---|---|
| KD | 121.8 | 134.1 | |
| DI | 119.2 | 118.3 | |
| DI | 133.2 | 134.1 | |
| DI. | 131.0 | 130.4. | |
| | | | |
| Tared Line Rinse | 10mL | — | |
| Total impinger weight gain, g | | | |

| | | | Side A | | | | | Side B / Canister | | | | | | | | | |
|---|---|---|---|---|---|---|---|---|---|---|---|---|---|---|---|---|---|
| Traverse pt. number | Sample or dwell time (Δt), min. | Clock time (24 hr) | Meter Reading (Vm), L | Meter temp., °F inlet | Meter temp., °F outlet | Sample rate cc/min | System or orifice Δ vac., in. Hg | Meter Reading (Vm), L | Meter/can temp., °F inlet | Meter/can temp., °F outlet | Sample rate cc/min | System or orifice Δ vac., in. Hg | Stack temp. °F | Probe temp. °F | Filter temp. °F | | |
| | 0 | 1440 | | | | | | 0.000 | NA | 76 | 400 | 3 | 750 | 246 | 248 | | |
| | 15 | | | | | | | 6.241 | | 82 | 400 | 3 | 690 | 243 | 250 | | |
| | 30 | | | | | | | 12.187 | | 84 | 400 | 3 | 720 | 245 | 252 | | |
| | 45 | | | | | | | 17.893 | | 83 | 400 | 3 | 705 | 242 | 250 | | |
| | 60 | | | | | | | 24.045 | | 83 | 400 | 3 | 1275 | 246 | 254 | | |
| | 75 | | | | | | | 29.812 | | 84 | 400 | 3 | 797 | 245 | 250 | | |
| | 90 | | | | | | | 35.756 | | 84 | 400 | 3 | 800 | 242 | 248 | | |
| | 105 | | | | | | | 42.042 | | 83 | 400 | 3 | 900 | 244 | 247 | | |
| | 120 | | | | | | | 48.096 | | 84 | 400 | 3 | 845 | 246 | 249 | | |
| | 135 | | | | | | | 54.123 | | 83 | 400 | 3 | 1050 | 249 | 250 | | |
| | 150 | | | | | | | 60.149 | | 81 | 400 | 3 | 835 | 243 | 253 | | |
| | 165 | | | | | | | 66.207 | | 83 | 400 | 3 | 927 | 246 | 247 | | |
| | 180 | 1755 | | | | | | 72.254 | ↓ | — | — | — | — | — | — | | |

MAQS LowFlowSampleTrainData R0

MONTROSE AIR QUALITY SERVICES

# LOW-FLOW OR CRITICAL ORIFICE SAMPLE TRAIN DATA

**Project Information**

Client / Facility: ODEQ
Source / Location: ACI - PORT 3. Forest Grove, WA
Run no. 2
Date 5/25 Operator / Assistant NW
Page 1 of 1
Method NCASI 99.02
Project No. PROJ-021372

**Equipment Identification**

| | |
|---|---|
| Meter console ID | 686 |
| Critical orifice ID | 686 |
| Rotameter ID | 686 |
| Stack TC ID | — |
| Filter TC ID | 138. |
| Micromanometer ID | — |
| Sensitivity, in. $H_2O$ | — |

**Calibration**

| | |
|---|---|
| Side A Meter Yd | — |
| Side B Meter Yd | — |
| Orifice choked flow rate | 400 |

**ALT-011 TC Check**

| | |
|---|---|
| Std. TC ID | See |
| Std. TC temp., °F | last |
| Stack TC temp., °F | |
| Continuity check + or - | Run |

**Pre-Test Equipment Checks - fill in only those required by the test method being performed**

Meter leak check: liter @ in. Hg — Side A 0 @ 21 — Side B 0 @ 21
Canister/orifice: 2 minutes, in. Hg before/after — Side A 30 / 30 — Side B / can 30 / 30
Sample flow rate check, cc/min A 1 0.3932 2 0.3926 3 0.3925 4 0.3928 5 0.4098 Avg 0.3962

**Post-Test Equipment Checks - fill in only those required by the test method being performed**

Meter leak check: liter @ in. Hg — Side A — @ — — Side B — @ —
Canister/orifice: 2 minutes, in. Hg before/after — Side A 0 / 22 — Side B 0 / 21
Sample flow rate check, cc/min 1 0.4040 2 0.4027 3 0.4034 4 0.4036 5 0.4036 Avg 0.4035
Other: (A) (B).

**Test / Sampling Parameters**

| | |
|---|---|
| Run duration, min. | 180 |
| No. of traverse pts. | 1 |
| Time per point, min. | 180 |
| Probe/filter range, °F | 248±25 |
| Imp. outlet max., °F | — |
| Sample rate, cc/min | ~400 |

**Ambient / Stack Gas Conditions**

| | |
|---|---|
| Baro. press., in. Hg | 29.72 |
| Ambient temp., °F | 63 |
| Static ($P_g$), in. $H_2O$ | -6.0. |
| Dry bulb temp., °F | — |
| Wet bulb temp., °F | — |

**Comments:**

| B side Pre | B. Post | Combined Pre | Combined Post |
|---|---|---|---|
| 1. 0.3822 | 0.3917 | 1 0.6510 | 0.7552 |
| 2. 0.3820 | 0.3924 | 2 0.6514 | 0.7546 |
| 3. 0.3814 | 0.3906 | 3 0.6521 | 0.7542 |
| 4. 0.3814 | 0.3897 | 4 0.6518 | 0.7549 |
| 5. 0.3813 | 0.3911 | 5 0.6521 | 0.7541 |
| AVG 0.3817 | AVG 0.3911 | AVG 0.6517 | AVG 0.7545 |

**Impingers**

| | INITIAL | FINAL | Initial, g | Final, g | Difference |
|---|---|---|---|---|---|
| KO | 98.8 | 110.6 | 111.7 | 123.5 | |
| DI | 132.6 | 132.6 | 130.4 | 130.5 | |
| DI | 133.4 | 133.4 | 131.8 | 131.8 | |
| DI. | 132.1 | 132.1 | 133.6 | 133.6. | |
| Tared Line Rinse | 10mL | | 10mL | — | |
| Total impinger weight gain, g | | | | | |

Can ID H ven-424 — Side A — Side B / Canister Can ID # Ven-101

| Traverse pt. number | Sample or dwell time (Δt), min. | Clock time (24 hr) | Meter Reading (Vm), L | Meter temp., °F inlet | Meter temp., °F outlet | Sample rate cc/min | System or orifice Δ vac., in. Hg | Meter Reading (Vm), L | Meter/can temp., °F inlet | Meter/can temp., °F outlet | Sample rate cc/min | System or orifice Δ vac., in. Hg | Stack temp. °F | Probe temp. °F | Filter temp. °F |
|---|---|---|---|---|---|---|---|---|---|---|---|---|---|---|---|
| CP | 0 | 0852 | | | | ~400 | 2 | | | | ~400 | 2 | 835 | 243 | 257 |
| | 15 | | | | | | 2 | | | | | 2 | 980 | 242 | 245 |
| | 30 | | | | | | 2 | | | | | 2 | 1050 | 245 | 247 |
| | 45 | | | | | | 2 | | | | | 2 | 1075 | 248 | 251 |
| | 60 | | | | | | 2 | | | | | 2 | 1015 | 244 | 250 |
| | 75 | | | | | | 2 | | | | | 2 | 825 | 246 | 250 |
| | 90 | | | | | | 2 | | | | | 2 | 1325 | 246 | 249 |
| | 105 | | | | | | 2 | | | | | 2 | 1150 | 247 | 252 |
| | 120 | | | | | | 2 | | | | | 2 | 1000 | 250 | 252 |
| | 135 | | | | | | 2 | | | | | 2 | 1090 | 252 | 251 |
| | 150 | | | | | | 2 | | | | | 2 | 768 | 253 | 250 |
| | 165 | | | | | | 2 | | | | | 2 | 720 | 251 | 250 |
| | 180 | 1152 | | | | | 2 | | | | | 2 | 1165 | 248 | 250 |

start vac -30
End vac -9

start vac -30
End vac -12

MAQS LowFlowSampleTrainData R0

Post Side A 1. .4415 2. .4421 3. 4420 4. .4427 5. .4432

MONTROSE AIR QUALITY SERVICES

# LOW-FLOW OR CRITICAL ORIFICE SAMPLE TRAIN DATA

**Project Information**

Client / Facility: ODEQ
Source / Location: ACI - PORT 3.
Run no.: 3
Date: 5/25/23 Operator / Assistant: PB
Page: 1 of 1
Method: NCASI 98.02
Project No.: 700-021372

**Equipment Identification**

Meter console ID: 686
Critical orifice ID: 686
Rotameter ID: 686
Stack TC ID: —
Filter TC ID: 138.
Micromanometer ID: —
Sensitivity, in. $H_2O$: —

**Calibration**

Side A Meter Yd: —
Side B Meter Yd: —
Orifice choked flow rate: 400

**ALT-011 TC Check**

Std. TC ID: 211007166
Std. TC temp., °F: 69
Stack TC temp., °F: 70
Continuity check + or -: +

**Test / Sampling Parameters**

Run duration, min.: 180
No. of traverse pts.: 1
Time per point, min.: 180
Probe/filter range, °F: 248±25
Imp. outlet max., °F: —
Sample rate, cc/min: 400

**Ambient / Stack Gas Conditions**

Baro. press., in. Hg: 29.72
Ambient temp., °F: 76.
Static ($P_g$), in. $H_2O$: -6.0
Dry bulb temp., °F: —
Wet bulb temp., °F: —

**Pre-Test Equipment Checks - fill in only those required by the test method being performed**

Meter leak check: liter @ in. Hg — Side A: 0.00 @ 22 — Side B: 0.00 @ 21
Canister/orifice: 2 minutes, in. Hg before/after — Side A: — / — — Side B / can: — / —
Sample flow rate check, cc/min PRE 1 .4016 2 .3997 3 .3978 4 .3970 5 .3980 Avg

**Post-Test Equipment Checks - fill in only those required by the test method being performed**

Meter leak check: liter @ in. Hg — Side A: 0.00 @ 20 — Side B: 0.00 @ 22
Canister/orifice: 2 minutes, in. Hg before/after — Side A: — / — — Side B: — / —
Sample flow rate check, cc/min PRE 1 .4170 2 .4127 3 .4038 4 .4095 5 .4102 Avg
Other: Post .4625 .4629 .4631 .4627 .4622

**Comments:**

PRE - Combined:
1. .7971 2. .7936 3. .7962
4. .7999 5. .7926

Post - Combined:
1. .8839 2. .8843 3. .8850
4. .8862 5. .8856

| Impingers | INITIAL | FINAL | Initial, g (B) | Final, g | Difference |
|---|---|---|---|---|---|
| KO | 94.5 (A) | 118.8 | 118.1 | 144.6 | |
| DI | 129.9 | 130.2 | 122.3 | 122.7 | |
| DI | 132.4 | 132.5 | 120.3 | 120.6 | |
| DI | 133.4 | 133.3 | 142.5 | 142.2 | |
| Tared Line Rinse | | | 10mL / 10mL | — | |
| Total impinger weight gain, g | | | | | |

Can ID# 001440 — Side A — Side B / Canister — Can ID# 00033 1

| Traverse pt. number | Sample or dwell time (Δt), min. | Clock time (24 hr) | Side A Meter Reading (Vm), L | Side A Meter temp., °F inlet | Side A Meter temp., °F outlet | Side A Sample rate cc/min | Side A System or orifice Δ vac., in. Hg | Side B Meter Reading (Vm), L | Side B Meter/can temp., °F inlet | Side B Meter/can temp., °F outlet | Side B Sample rate cc/min | Side B System or orifice Δ vac., in. Hg | Stack temp. °F | Probe temp. °F | Filter temp. °F |
|---|---|---|---|---|---|---|---|---|---|---|---|---|---|---|---|
| 1 | 0 | 1305 | | | | ~400 | .5 | | | | ~400 | .5 | 900 | 255 | 248 |
| | 15 | | | | | | .5 | | | | | .5 | 700 | 253 | 250 |
| | 30 | | | | | | .5 | | | | | .5 | 925 | 249 | 245 |
| | 45 | | | | | | .5 | | | | | .5 | 1100 | 257 | 247 |
| | 60 | | | | | | .5 | | | | | .5 | 900 | 255 | 250 |
| | 75 | | | | | | .5 | | | | | .5 | 1020 | 253 | 250 |
| | 90 | | | | | | .5 | | | | | .5 | 955 | 250 | 252 |
| | 105 | | | | | | .5 | | | | | .5 | 940 | 250 | 251 |
| | 120 | | | | | | .5 | | | | | .5 | 1075 | 251 | 250 |
| | 135 | | | | | | .5 | | | | | .5 | 1225 | 252 | 249 |
| | 150 | | | | | | .5 | | | | | .5 | 1200 | 252 | 250 |
| | 175 | | | | | | .5 | | | | | .5 | 1380 | 251 | 251 |
| | 180 | 1605 | | | | | | | | | | | | | |

Start vac -20.0
End vac -19

Start vac -29.0
End vac -9

MAQS LowFlowSampleTrainData R0

MONTROSE AIR QUALITY SERVICES

# LOW-FLOW OR CRITICAL ORIFICE SAMPLE TRAIN DATA

**Project Information**

Client / Facility: ODEQ.
Source / Location: ACI / Portland Shop.
Run no.: TRAIN SPIKE NCASI 99.02
Date: 5/30/25 Operator / Assistant: SW.
Page: 1 of 1
Method: NCASI 99.02
Project No.: PROJ-021372

**Equipment Identification**

| | |
|---|---|
| Meter console ID | LFCB10 |
| Critical orifice ID | — |
| Rotameter ID | — |
| Stack TC ID | — |
| Filter TC ID | — |
| Micromanometer ID | LFCB10B |
| Sensitivity, in. $H_2O$ | 0.001 |

**Test / Sampling Parameters**

| | |
|---|---|
| Run duration, min. | 180 |
| No. of traverse pts. | 1 |
| Time per point, min. | 180 |
| Probe/filter range, °F | 248 |
| Imp. outlet max., °F | 68. |
| Sample rate, cc/min | 400±100 |

**Calibration**

| | |
|---|---|
| Side A Meter Yd | — |
| Side B Meter Yd | 0.9963 |
| Orifice choked flow rate | — |

**ALT-011 TC Check**

| | |
|---|---|
| Std. TC ID | 221292116 |
| Std. TC temp., °F | 73.5 |
| Stack TC temp., °F | 73.0 |
| Continuity check + or - | + |

**Ambient / Stack Gas Conditions**

| | |
|---|---|
| Baro. press., in. Hg | 30.00. |
| Ambient temp., °F | 74f. |
| Static ($P_g$), in. $H_2O$ | — |
| Dry bulb temp., °F | — |
| Wet bulb temp., °F | — |

**Pre-Test Equipment Checks - fill in only those required by the test method being performed**

Meter leak check: liter @ in. Hg — Side A — @ — Side B 0.000 @ 15"
Canister/orifice: 2 minutes, in. Hg before/after — Side A -32 / -32 — Side B / can -30 / -30
Sample flow rate check, cc/min — 1 — SPIKE CAN 2 — 3 — 4 — 5 — Avg —

**Post-Test Equipment Checks - fill in only those required by the test method being performed**

Meter leak check: liter @ in. Hg — Side A — @ — Side B 0.000 @ 14"
Canister/orifice: 2 minutes, in. Hg before/after — Side A -20 / -20. — Side B -11 / -11
Sample flow rate check, cc/min — 1 — SPIKE CAN. 2 — 3 — 4 — 5 — Avg —
Other:

**Comments:**

TRAIN SPIKE.

**Impingers**

| | Initial, g | Final, g | Difference |
|---|---|---|---|
| DI | 131.8 | 143.8 | |
| DI | 142.9 | 144.7 | |
| DI. | 133.5 | 135.0 | |
| +SPIKE | 1.0 | | |
| Tared Line Rinse | | 12mL | |
| Total impinger weight gain, g | | | |

| Traverse pt. number | Sample or dwell time (Δt), min. | Clock time (24 hr) | Side A: Meter Reading (Vm), L | Side A: Meter temp., °F inlet | Side A: Meter temp., °F outlet | Side A: Sample rate cc/min | Side A: System or orifice Δ vac., in. Hg | Side B / Canister: Meter Reading (Vm), L | Side B / Canister: Meter/can temp., °F inlet | Side B / Canister: Meter/can temp., °F outlet | Side B / Canister: Sample rate cc/min | Side B / Canister: System or orifice Δ vac., in. Hg | Stack temp. °F | Probe temp °F | Filter temp. °F | | |
|---|---|---|---|---|---|---|---|---|---|---|---|---|---|---|---|---|---|
| 1 | 0 | 1200 | | | | | | 0.000 | N/A | 70 | 400 | 2 | | 249 | 250 | | |
| | 15 | | | | | | | 6.30 | | 75 | | 2 | | 249 | 250 | | |
| | 30 | | | | | | | 12.10 | | 76 | | 2 | | 250 | 250 | | |
| | 45 | | | | | | | 17.95 | | 77 | | 2 | | 251 | 251 | | |
| | 60 | | | | | | | 24.10 | | 78 | | 2 | | 251 | 251 | | |
| | 75 | | | | | | | 29.70 | | 78 | | 2 | | 251 | 251 | | |
| | 90 | | | | | | | 35.80 | | 78 | | 2 | | 250 | 250 | | |
| | 105 | | | | | | | 42.00 | | 78 | | 2 | | 251 | 250 | | |
| | 120 | | | | | | | 48.10 | | 79 | | 2 | | 251 | 251 | | |
| | 135 | | | | | | | 54.10 | | 79 | | 2 | | 251 | 251 | | |
| | 150 | | | | | | | 60.20 | | 79 | | 2 | | 250 | 250 | | |
| | 165 | | | | | | | 66.30 | | 79 | | 2 | | 250 | 250 | | |
| | 180 | 1500 | | | | | | 72.520 | — | — | — | 2 | — | — | — | | |

Unspiked Can #000343. Spiked Can #VEN-405.
Orifice: FC008 Start: -30, End -11. Start: -52 End: -20. Orifice: 4FLP78.



80 of 489
W006AS-021372-RT-2857

# Appendix A.7
# EPA Method TO-15 Data Sheets

ONTROSE QUALITY SERVICES

# TANK/TRAP/CANISTER DATA

**Project Information**

Client / Facility: ODEQ
Source / Location: ACT
Pollutant(s): 5/24/23 Date: TCE/VA Operator: MG
Page: 1 of 1
Method: TO-15
Project No.: 021372

**Sample Container (circle):**

Tedlar bag | (Summa canister) | Tank | Trap | Tube | Other: —

**Run Data**

| | Run 1 | | Run 2 | | Run 3 | |
|---|---|---|---|---|---|---|
| | Start | End | Start | End | Start | End |
| Time | 1418 | 1718 | 0852 | 1152 | 1305 | 1605 |
| Bar. Press., in. Hg: | 29.88 | 29.88 | 29.72 | 29.72 | 29.72 | 29.72 |
| Ambient Temp., °F: | 68 | 71 | 58 | 71 | 72 | 80 |
| Static Press., in $H_2O$: | -7.0 | -7.0 | -7.0 | -7.0 | -7.0 | -7.0 |
| Stack Temp., °F: | ~850 | ~850 | ~850 | ~850 | ~850 | ~850 |
| **Summa Can Information** | | | | | | |
| Vacuum, in. Hg: | 29.0 | 15.0 | 30.0 | 9.0 | 30.0 | 9.0 |
| Summa Can ID: | C80054 | | C80145 | | C80185 | |
| Orifice ID | 065508 | | 065508 | | 065508 | |
| Vacuum Gauge ID: | 13770 | | 13770 | | 13770 | |
| *Vacuum should not drop below 1 psi* | | | | | | |
| **Draeger Tube Information** | | | | | | |
| Indicator marking | | | | | | |
| Number of strokes | | | | | | |
| Concentration, ppm | | | | | | |
| Draeger Tube ID/Lot # | | | | | | |
| **Sorbent Tube Information** | | | | | | |
| Vacuum, in. Hg: | | | | | | |
| System Leak Checks: | | | | | | |
| Start Vac., in. Hg: | | | | | | |
| End Vac., in. Hg: | | | | | | |
| *The system must not lose more than 1 inch of vauum in two minutes* | | | | | | |

Notes:

MONTROSE AIR QUALITY SERVICES

# TANK/TRAP/CANISTER DATA

**Project Information**

Client / Facility: ODEQ
Source / Location: ACI — Forest Grove, OR
Pollutant(s): select HAPS · Date: 5/24 — Operator: NW
Page: 1 of 1
Method: NCASI 9102
Project No.: 021372

**Sample Container (circle):**

Tedlar bag | Summa canister | (Tank) | Trap | Tube | Other: _____

**Run Data**

| | Run 1 | | Run 2 | | Run 3 | |
|---|---|---|---|---|---|---|
| | Start | End | Start | End | Start | End |
| Time | 1440 | 1755 | | | | |
| Bar. Press., in. Hg: | 29.88 | | | | | |
| Ambient Temp., °F: | 70 | | | | | |
| Static Press., in $H_2O$: | -6 | | | | | |
| Stack Temp., °F: | 500 - 1300 | | | | | |
| **Summa Can Information** | | | | | | |
| Vacuum, in. Hg: | 30 | 10 | See NCASI sheet | | See NCASI sheet | |
| Summa Can ID: | JEN-501 | | | | | |
| Orifice ID | 29 | | | | | |
| Vacuum Gauge ID: | 4FLP7B | | | | | |
| *Vacuum should not drop below 1 psi* | | | | | | |
| **Draeger Tube Information** | | | | | | |
| Indicator marking | | | | | | |
| Number of strokes | | | | | | |
| Concentration, ppm | | | | | | |
| Draeger Tube ID/Lot # | | | | | | |
| **Sorbent Tube Information** | | | | | | |
| Vacuum, in. Hg: | | | | | | |
| System Leak Checks: | | | | | | |
| Start Vac., in. Hg: | | | | | | |
| End Vac., in. Hg: | | | | | | |
| *The system must not lose more than 1 inch of vauum in two minutes* | | | | | | |

Notes:

# Appendix A.8
# Instrumental Test Method Data

**MAQDAQ Gas Averages Summary**

Each part (segment) was 90 minutes; two 90-minute segment for each 180 minute isokinetic run

**Run 1, 5/23**

| Bias Corrected Average | O2 | CO2 | CO | SO2 | THC | CH4 | NOx |
|---|---|---|---|---|---|---|---|
| Part 1 | 15.53 | 5.203 | 1306 | 10.75 | 88.73 | 34.6 | 83.69 |
| Part 2 | 17.72 | 3.158 | 865.9 | 5.803 | 90.98 | 28.72 | 46.73 |
| **Average (bias corrected avg)** | **16.63** | **4.18** | **1086.0** | **8.28** | **89.86** | **31.66** | **65.21** |

**Run 2, 5/23**

| Bias Corrected Average | O2 | CO2 | CO | SO2 | THC | CH4 | NOx |
|---|---|---|---|---|---|---|---|
| Part 1 | 14.69 | 6.06 | 939.2 | 7.498 | 61.22 | 20.13 | 95.12 |
| Part 2 | 17.69 | 3.078 | 883.2 | 4.32 | 88.35 | 27.37 | 42.76 |
| **Average (bias corrected avg)** | **16.19** | **4.569** | **911.2** | **5.909** | **74.785** | **23.75** | **68.94** |

**Run 3, 5/24**

| Bias Corrected Average | O2 | CO2 | CO | SO2 | THC | CH4 | NOx |
|---|---|---|---|---|---|---|---|
| Part 1 | 15.24 | 5.542 | 1516 | 10.03 | 135 | 45.42 | 84.96 |
| Part 2 | 16.44 | 4.454 | 571.3 | 5.63 | 39.3 | 13.11 | 60.81 |
| **Average (bias corrected avg)** | **15.84** | **4.998** | **1043.7** | **7.83** | **87.15** | **29.27** | **72.89** |

**MAQDAQ Gas Averages Summary**

Each part (segment) was 90 minutes; two 90-minute segment for each 180 minute isokinetic run

**Run 4, 5/24**

| Bias Corrected Average | O2 | CO2 | CO | SO2 | THC | CH4 | NOx |
|---|---|---|---|---|---|---|---|
| Part 1 | 15.58 | 5.19 | 752.2 | 8.04 | 49.14 | 16.69 | 88.15 |
| Part 2 | 15.6 | 5.156 | 656.5 | 2.577 | 43.31 | 14.61 | 77.48 |
| **Average (bias corrected avg)** | **15.59** | **5.173** | **704.4** | **5.309** | **46.225** | **15.65** | **82.82** |

**Run 5, 5/25**

| Bias Corrected Average | O2 | CO2 | CO | SO2 | THC | CH4 | NOx |
|---|---|---|---|---|---|---|---|
| Part 1 | 14.19 | 6.553 | 1561 | 12.24 | 104.3 | 39.48 | 109.3 |
| Part 2 | 15.86 | 4.994 | 594.6 | 4.725 | 33.32 | 12.17 | 64.97 |
| **Average (bias corrected avg)** | **15.025** | **5.774** | **1077.8** | **8.483** | **68.81** | **25.83** | **87.14** |

**Run 6, 5/25**

| Bias Corrected Average | O2 | CO2 | CO | SO2 | THC | CH4 | NOx |
|---|---|---|---|---|---|---|---|
| Part 1 | 15.45 | 5.36 | 671.4 | 6.866 | 42.64 | 15.03 | 81.66 |
| Part 2 | 15.44 | 5.359 | 628.1 | 4.086 | 41.16 | 13.50 | 77.31 |
| **Average (bias corrected avg)** | **15.45** | **5.360** | **649.8** | **5.476** | **41.9** | **14.27** | **79.49** |

| MAQDAQ 1.0 | | | |
|---|---|---|---|
| Project Name: ODEQ ACI - Compliance Testing | Project Number: PROJ-021372 | CEMS Operator: SW | Unit/Condition: ACI |
| Run Length: 90 | Record Interval: 6 | Average Interval: 60 | Triplicate Sampling: True |
| Traverse: True | Ports: 1 | Points per port: 3 | DAQ Device: DT9806(01) |

## Run 1 Average Results - Part 1

## 09:51:00 - 11:21:00

| | **Name:** | O2 SN-719 | CO2 SN-719 | | CO SN-743 | SO2 SN-3 | THC SN-718 | CH4 SN-718 | NOx SN-695 |
|---|---|---|---|---|---|---|---|---|---|
| | **Make/Model:** | | | | | | | | |
| May 23 2023 | 09:52:00 | 14.72 | 5.697 | | 2565 | 13.40 | 145.7 | 95.05 | 97.19 |
| May 23 2023 | 09:53:00 | 14.86 | 5.567 | | 2203 | 11.23 | 226.5 | 64.44 | 91.43 |
| May 23 2023 | 09:54:00 | 14.58 | 5.922 | | 3177 | 13.08 | 373.1 | 76.61 | 85.60 |
| May 23 2023 | 09:55:00 | 12.59 | 7.824 | | 2442 | 16.81 | 55.06 | 78.43 | 140.3 |
| May 23 2023 | 09:56:00 | 13.50 | 6.927 | | 1124 | 16.74 | 46.50 | 2.639 | 123.7 |
| May 23 2023 | 09:57:00 | 13.38 | 6.993 | | 1761 | 15.34 | 28.49 | 25.13 | 119.8 |
| May 23 2023 | 09:58:00 | 13.36 | 7.220 | | 1572 | 15.82 | 37.28 | 12.63 | 123.8 |
| May 23 2023 | 09:59:00 | 13.50 | 7.013 | | 2214 | 16.12 | 45.70 | 30.88 | 119.3 |
| May 23 2023 | 10:00:00 | 12.28 | 8.175 | | 1483 | 19.54 | 14.04 | 25.01 | 146.0 |
| May 23 2023 | 10:01:00 | 13.49 | 7.004 | | 1480 | 15.98 | 26.72 | 13.84 | 117.3 |
| May 23 2023 | 10:02:00 | 14.03 | 6.352 | | 2511 | 13.02 | 106.6 | 36.04 | 100.4 |
| May 23 2023 | 10:03:00 | 14.32 | 6.133 | | 2642 | 11.28 | 140.3 | 58.35 | 92.88 |
| May 23 2023 | 10:04:00 | 14.64 | 5.876 | | 1887 | 9.642 | 77.32 | 55.74 | 96.69 |
| May 23 2023 | 10:05:00 | 14.48 | 5.983 | | 1230 | 10.07 | 58.24 | 33.23 | 97.14 |
| May 23 2023 | 10:06:00 | 15.17 | 5.277 | | 1234 | 8.120 | 65.27 | 32.55 | 84.89 |
| May 23 2023 | 10:07:00 | 15.17 | 5.309 | | 983.2 | 7.012 | 55.85 | 33.49 | 85.65 |
| May 23 2023 | 10:08:00 | 15.07 | 5.361 | | 984.2 | 7.182 | 55.48 | 30.16 | 77.89 |
| May 23 2023 | 10:09:00 | 15.34 | 5.126 | | 1023 | 6.552 | 73.09 | 34.11 | 74.31 |
| May 23 2023 | 10:10:00 | 15.68 | 4.760 | | 1025 | 5.978 | 75.77 | 34.06 | 69.02 |
| May 23 2023 | 10:11:00 | 16.18 | 4.331 | | 734.3 | 4.562 | 39.78 | 23.37 | 65.36 |
| May 23 2023 | 10:12:00 | 16.23 | 4.278 | | 637.4 | 4.312 | 47.41 | 13.30 | 62.79 |
| May 23 2023 | 10:13:00 | 16.05 | 4.381 | | 663.5 | 4.457 | 36.64 | 10.32 | 60.98 |
| May 23 2023 | 10:14:00 | 16.63 | 3.729 | | 643.8 | 3.683 | 43.54 | 20.79 | 51.38 |
| May 23 2023 | 10:15:00 | 16.47 | 4.083 | | 503.6 | 3.223 | 24.01 | 15.00 | 53.09 |
| May 23 2023 | 10:16:00 | 16.77 | 3.710 | | 517.3 | 2.924 | 24.70 | 14.50 | 47.85 |
| May 23 2023 | 10:17:00 | 16.15 | 4.401 | | 557.6 | 3.336 | 51.40 | 18.45 | 63.36 |
| May 23 2023 | 10:18:00 | 15.34 | 5.141 | | 1530 | 8.610 | 107.7 | 42.96 | 85.42 |
| May 23 2023 | 10:19:00 | 14.91 | 5.565 | | 1784 | 11.21 | 119.9 | 40.22 | 93.83 |
| May 23 2023 | 10:20:00 | 14.78 | 5.584 | | 1368 | 11.55 | 82.46 | 36.65 | 99.3 |
| May 23 2023 | 10:21:00 | 15.62 | 4.687 | | 964.9 | 10.84 | 43.13 | 26.77 | 92.15 |
| End of port 1 point 1 | | | | | | | | | |
| May 23 2023 | 10:22:00 | 16.06 | 4.406 | | 844.5 | 8.358 | 51.91 | 26.30 | 74.85 |
| May 23 2023 | 10:23:00 | 16.61 | 3.884 | | 789.8 | 6.544 | 63.88 | 24.69 | 64.25 |
| May 23 2023 | 10:24:00 | 16.22 | 4.284 | | 628.5 | 6.923 | 36.13 | 13.28 | 68.89 |
| May 23 2023 | 10:25:00 | 16.38 | 4.100 | | 698.9 | 7.192 | 41.75 | 19.38 | 65.59 |
| May 23 2023 | 10:26:00 | 15.93 | 4.616 | | 586.9 | 8.549 | 20.62 | 17.77 | 76.51 |
| May 23 2023 | 10:27:00 | 16.16 | 4.405 | | 515.7 | 8.241 | 23.70 | 8.320 | 69.15 |
| May 23 2023 | 10:28:00 | 16.30 | 4.205 | | 499.5 | 7.157 | 28.83 | 13.64 | 64.02 |
| May 23 2023 | 10:29:00 | 16.11 | 4.392 | | 792.7 | 7.957 | 55.46 | 15.28 | 66.97 |
| May 23 2023 | 10:30:00 | 16.35 | 4.188 | | 1118 | 8.053 | 81.51 | 42.75 | 60.92 |
| May 23 2023 | 10:31:00 | 16.70 | 3.818 | | 1158 | 7.053 | 155.5 | 46.36 | 54.48 |
| May 23 2023 | 10:32:00 | 15.77 | 4.843 | | 1506 | 9.857 | 160.4 | 36.34 | 79.24 |
| May 23 2023 | 10:33:00 | 14.50 | 5.929 | | 2011 | 13.90 | 154.7 | 34.46 | 104.2 |
| May 23 2023 | 10:34:00 | 14.89 | 5.579 | | 1991 | 12.94 | 108.8 | 13.19 | 98.37 |
| May 23 2023 | 10:35:00 | 15.30 | 5.272 | | 1332 | 10.90 | 33.78 | 20.62 | 95.98 |
| May 23 2023 | 10:36:00 | 15.59 | 4.848 | | 978.8 | 9.217 | 88.80 | 26.36 | 80.21 |
| May 23 2023 | 10:37:00 | 15.73 | 4.798 | | 891.4 | 8.442 | 52.22 | 21.63 | 76.95 |



| MAQDAQ 1.0 | | | |
|---|---|---|---|
| Project Name: ODEQ ACI - Compliance Testing | Project Number: PROJ-021372 | CEMS Operator: SW | Unit/Condition: ACI |
| Run Length: 90 | Record Interval: 6 | Average Interval: 60 | Triplicate Sampling: True |
| Traverse: True | Ports: 1 | Points per port: 3 | DAQ Device: DT9806(01) |

| | | | | | | | | | |
|---|---|---|---|---|---|---|---|---|---|
| May 23 2023 | 10:38:00 | 16.26 | 4.165 | | 850.2 | 6.677 | 91.83 | 18.14 | 66.95 |
| May 23 2023 | 10:39:00 | 16.30 | 4.245 | | 916.6 | 6.937 | 80.51 | 22.57 | 67.48 |
| May 23 2023 | 10:40:00 | 15.81 | 4.614 | | 1114 | 8.620 | 91.25 | 33.27 | 68.87 |
| May 23 2023 | 10:41:00 | 15.40 | 5.187 | | 1385 | 9.714 | 119.5 | 43.42 | 80.72 |
| May 23 2023 | 10:42:00 | 14.56 | 5.714 | | 1764 | 16.10 | 77.49 | 26.92 | 107.4 |
| May 23 2023 | 10:43:00 | 14.91 | 5.619 | | 1704 | 13.02 | 54.91 | 64.24 | 94.50 |
| May 23 2023 | 10:44:00 | 15.28 | 5.091 | | 1934 | 12.19 | 106.7 | 58.26 | 80.14 |
| May 23 2023 | 10:45:00 | 14.76 | 5.836 | | 2139 | 12.88 | 192.1 | 38.01 | 100.5 |
| May 23 2023 | 10:46:00 | 14.12 | 6.213 | | 957.9 | 15.48 | 15.17 | 9.495 | 119.5 |
| May 23 2023 | 10:47:00 | 14.85 | 5.574 | | 828.7 | 12.76 | 26.51 | 9.882 | 99.7 |
| May 23 2023 | 10:48:00 | 15.35 | 5.007 | | 991.8 | 11.09 | 49.94 | 26.65 | 82.40 |
| May 23 2023 | 10:49:00 | 15.86 | 4.590 | | 805.5 | 8.925 | 43.58 | 17.43 | 76.15 |
| May 23 2023 | 10:50:00 | 16.14 | 4.308 | | 678.9 | 7.570 | 43.22 | 17.53 | 74.35 |
| May 23 2023 | 10:51:00 | 16.31 | 4.130 | | 600.8 | 6.601 | 38.60 | 16.03 | 67.43 |
| End of port 1 point 2 | | | | | | | | | |
| May 23 2023 | 10:52:00 | 16.49 | 3.956 | | 540.5 | 5.704 | 35.23 | 13.09 | 61.66 |
| May 23 2023 | 10:53:00 | 16.64 | 3.824 | | 546.3 | 5.114 | 28.54 | 17.09 | 58.85 |
| May 23 2023 | 10:54:00 | 16.77 | 3.713 | | 523.3 | 4.891 | 31.46 | 12.48 | 53.97 |
| May 23 2023 | 10:55:00 | 16.20 | 4.231 | | 664.3 | 6.790 | 48.96 | 15.32 | 70.13 |
| May 23 2023 | 10:56:00 | 15.01 | 5.509 | | 1125 | 13.10 | 62.86 | 18.03 | 95.38 |
| May 23 2023 | 10:57:00 | 15.65 | 4.793 | | 1756 | 10.96 | 124.1 | 62.40 | 74.89 |
| May 23 2023 | 10:58:00 | 15.15 | 5.389 | | 1490 | 11.14 | 104.1 | 52.40 | 96.25 |
| May 23 2023 | 10:59:00 | 15.21 | 5.288 | | 1221 | 11.37 | 52.66 | 27.34 | 95.26 |
| May 23 2023 | 11:00:00 | 15.63 | 4.762 | | 1315 | 11.62 | 74.37 | 26.76 | 82.16 |
| May 23 2023 | 11:01:00 | 15.87 | 4.514 | | 1327 | 9.777 | 92.82 | 44.55 | 79.74 |
| May 23 2023 | 11:02:00 | 15.53 | 4.977 | | 1495 | 10.60 | 114.5 | 40.10 | 80.60 |
| May 23 2023 | 11:03:00 | 15.80 | 4.723 | | 2048 | 11.22 | 149.1 | 82.31 | 75.36 |
| May 23 2023 | 11:04:00 | 15.41 | 5.075 | | 1902 | 12.77 | 150.9 | 77.60 | 87.90 |
| May 23 2023 | 11:05:00 | 14.88 | 5.602 | | 2020 | 14.94 | 206.3 | 51.55 | 103.1 |
| May 23 2023 | 11:06:00 | 14.61 | 5.942 | | 1462 | 16.52 | 130.3 | 21.50 | 116.3 |
| May 23 2023 | 11:07:00 | 14.60 | 5.691 | | 1641 | 18.02 | 64.57 | 39.19 | 112.1 |
| May 23 2023 | 11:08:00 | 14.91 | 5.494 | | 2136 | 15.25 | 126.8 | 73.39 | 100.2 |
| May 23 2023 | 11:09:00 | 15.50 | 5.138 | | 2402 | 14.53 | 191.3 | 55.34 | 91.32 |
| May 23 2023 | 11:10:00 | 14.60 | 5.830 | | 1948 | 16.83 | 104.6 | 60.91 | 111.2 |
| May 23 2023 | 11:11:00 | 15.27 | 5.223 | | 1491 | 14.43 | 85.54 | 22.75 | 93.12 |
| May 23 2023 | 11:12:00 | 15.49 | 4.994 | | 1702 | 12.82 | 131.0 | 51.81 | 90.20 |
| May 23 2023 | 11:13:00 | 15.83 | 4.529 | | 1556 | 11.62 | 122.1 | 46.31 | 81.96 |
| May 23 2023 | 11:14:00 | 16.47 | 4.150 | | 1134 | 9.949 | 106.3 | 49.36 | 74.05 |
| May 23 2023 | 11:15:00 | 15.41 | 5.107 | | 1700 | 15.66 | 236.2 | 47.04 | 97.95 |
| May 23 2023 | 11:16:00 | 15.06 | 5.414 | | 1105 | 17.29 | 56.19 | 28.12 | 106.6 |
| May 23 2023 | 11:17:00 | 15.34 | 5.233 | | 1356 | 18.43 | 84.98 | 37.67 | 102.9 |
| May 23 2023 | 11:18:00 | 15.91 | 4.602 | | 1675 | 16.06 | 173.3 | 45.54 | 87.39 |
| May 23 2023 | 11:19:00 | 16.64 | 3.832 | | 1604 | 12.97 | 208.6 | 61.88 | 71.01 |
| May 23 2023 | 11:20:00 | 17.17 | 3.400 | | 1210 | 10.43 | 201.5 | 62.70 | 61.81 |
| May 23 2023 | 11:21:00 | 17.46 | 3.010 | | 1075 | 9.280 | 169.6 | 52.82 | 58.41 |
| End of port 1 point 3 | | | | | | | | | |

| | | | | | | | | | |
|---|---|---|---|---|---|---|---|---|---|
| | **Average:** | 15.40 | 5.069 | | 1329 | 10.68 | 88.73 | 34.60 | 85.30 |
| | **Max:** | 17.46 | 8.175 | | 3177 | 19.54 | 373.1 | 95.05 | 146.0 |
| | **Min:** | 12.28 | 3.010 | | 499.5 | 2.924 | 14.04 | 2.639 | 47.85 |

| MAQDAQ 1.0 | | | |
|---|---|---|---|
| Project Name: ODEQ ACI - Compliance Testing | Project Number: PROJ-021372 | CEMS Operator: SW | Unit/Condition: ACI |
| Run Length: 90 | Record Interval: 6 | Average Interval: 60 | Triplicate Sampling: True |
| Traverse: True | Ports: 1 | Points per port: 3 | DAQ Device: DT9806(01) |

## Stratification Results

| **Port** | **Point** | O2 SN-719 | CO2 SN-719 | | CO SN-743 | SO2 SN-3 | THC SN-718 | CH4 SN-718 | NOx SN-695 |
|---|---|---|---|---|---|---|---|---|---|
| 1 | 1 | 14.79 | 5.654 | | 1457 | 9.918 | 84.57 | 33.21 | 91.18 |
| 1 | 2 | 15.76 | 4.718 | | 1088 | 9.588 | 70.20 | 25.62 | 78.41 |
| 1 | 3 | 15.78 | 4.724 | | 1470 | 12.20 | 110.8 | 44.90 | 85.68 |
| | **Strat diff:** | 0.337 | 0.622 | | 131.7 | 1.631 | 22.28 | 10.32 | 6.090 |
| | **Strat %:** | 4.231 | 6.240 | | 9.838 | 9.279 | 4.466 | 3.953 | 7.851 |

| MAQDAQ 1.0 | | | |
|---|---|---|---|
| Project Name: ODEQ ACI - Compliance Testing | Project Number: PROJ-021372 | CEMS Operator: SW | Unit/Condition: ACI |
| Run Length: 90 | Record Interval: 6 | Average Interval: 60 | Triplicate Sampling: True |
| Traverse: True | Ports: 1 | Points per port: 3 | DAQ Device: DT9806(01) |

## Run 1 Post run bias - Part 1

## 09:51:00 - 11:21:00

| | | | | | | | | | |
|---|---|---|---|---|---|---|---|---|---|
| | **Name:** | O2 SN-719 | CO2 SN-719 | | CO SN-743 | SO2 SN-3 | THC SN-718 | CH4 SN-718 | NOx SN-695 |
| | **Make/Model:** | | | | | | | | |
| | **25A or 7E:** | 7E | 7E | | 7E | 7E | 25A | 25A | 7E |
| | **Run summary data** | | | | | | | | |
| | **Raw Avg:** | 15.40 | 5.069 | | 1329 | 10.68 | 88.73 | 34.60 | 85.30 |
| | **Max:** | 17.46 | 8.175 | | 3177 | 19.54 | 373.1 | 95.05 | 146.0 |
| | **Min:** | 12.28 | 3.010 | | 499.5 | 2.924 | 14.04 | 2.639 | 47.85 |
| | **Cylinder Concentrations** | | | | | | | | |
| | **Zero:** | 0.000 | 0.000 | | 0.000 | 0.000 | 0.000 | 0.000 | 0.000 |
| | **Low:** | | | | | | 297.1 | 297.1 | |
| | **Mid:** | 10.04 | 9.946 | | 3997 | 15.20 | 495.7 | 495.7 | 127.6 |
| | **High:** | 23.21 | 22.54 | | 7911 | 30.29 | 874.8 | 874.8 | 279.5 |
| | **Calibration Readings** | | | | | | | | |
| | **Zero reading:** | 0.009 | 0.003 | | 1.800 | 0.128 | 0.180 | 0.030 | 0.096 |
| | **Low reading:** | | | | | | 308.5 | 307.1 | |
| | **Mid reading:** | 9.988 | 9.878 | | 4048 | 15.51 | 513.2 | 513.7 | 127.7 |
| | **High reading:** | 23.20 | 22.53 | | 7893 | 30.38 | 876.4 | 875.6 | 279.7 |
| **EPA Method 7E Error Calculations** | | | | | | | | | |
| **Zero %Err:** | **<2.0** | 0.039 | 0.013 | | 0.023 | 0.423 | N/A | N/A | 0.034 |
| **Mid %Err:** | **<2.0** | -0.224 | -0.302 | | 0.645 | 1.023 | N/A | N/A | 0.036 |
| **High %Err:** | **<2.0** | -0.043 | -0.044 | | -0.228 | 0.297 | N/A | N/A | 0.072 |
| **EPA Method 25A Error Calculations** | | | | | | | | | |
| **Zero %Err:** | **N/A** | N/A | N/A | | N/A | N/A | 0.180 | 0.030 | N/A |
| **Low %Err:** | **5% of cyl** | N/A | N/A | | N/A | N/A | 11.40 | 10.000 | N/A |
| **Mid %Err:** | **5% of cyl** | N/A | N/A | | N/A | N/A | 17.50 | 18.00 | N/A |
| **High %Err:** | **N/A** | N/A | N/A | | N/A | N/A | 1.600 | 0.800 | N/A |
| **Initial Bias Data** | | | | | | | | | |
| | **Zero reading:** | 0.058 | -0.137 | | 6.100 | -0.458 | 0.180 | 0.030 | 0.416 |
| | **Span reading:** | 23.10 | 9.857 | | 4156 | 15.14 | 513.2 | 513.7 | 128.1 |
| **Zero % bias:** | **<5.0** | 0.211 | -0.621 | | 0.054 | -1.935 | N/A | N/A | 0.114 |
| **Span % bias:** | **<5.0** | -0.431 | -0.093 | | 1.365 | -1.222 | N/A | N/A | 0.143 |
| **Final Bias Data** | | | | | | | | | |
| | **Zero reading:** | 0.018 | -0.060 | | 9.200 | 0.049 | 1.100 | 1.190 | 0.928 |
| | **Span reading:** | 22.90 | 9.702 | | 3947 | 15.23 | 513.4 | 513.6 | 131.3 |
| **Zero % bias:** | **<5.0** | 0.039 | -0.280 | | 0.094 | -0.261 | N/A | N/A | 0.298 |
| **Span % bias:** | **<5.0** | -1.293 | -0.781 | | -1.277 | -0.924 | N/A | N/A | 1.288 |
| **Zero % drift:** | **<3.0** | 0.172 | 0.341 | | 0.040 | 1.674 | N/A | N/A | 0.184 |
| **Span % drift:** | **<3.0** | 0.862 | 0.688 | | 2.642 | 0.298 | N/A | N/A | 1.145 |
| **Zero drift:** | **<3.0% span** | N/A | N/A | | N/A | N/A | -0.920 | -1.160 | N/A |
| **Span drift:** | **<3.0% span** | N/A | N/A | | N/A | N/A | -0.200 | 0.100 | N/A |
| **Bias Corrected Averages** | | | | | | | | | |
| | **Cor Avg:** | 15.53 | 5.203 | | 1306 | 10.75 | 88.73 | 34.60 | 83.69 |

| MAQDAQ 1.0 | | | |
|---|---|---|---|
| Project Name: ODEQ ACI - Compliance Testing | Project Number: PROJ-021372 | CEMS Operator: SW | Unit/Condition: ACI |
| Run Length: 90 | Record Interval: 6 | Average Interval: 60 | Triplicate Sampling: True |
| Traverse: True | Ports: 1 | Points per port: 3 | DAQ Device: DT9806(01) |

## Run 2 Average Results - Part 2

## 11:40:00 - 13:10:00

| | **Name:** | O2 SN-719 | CO2 SN-719 | | CO SN-743 | SO2 SN-3 | THC SN-718 | CH4 SN-718 | NOx SN-695 |
|---|---|---|---|---|---|---|---|---|---|
| | **Make/Model:** | | | | | | | | |
| May 23 2023 | 11:41:00 | 17.86 | 2.903 | | 628.0 | 5.251 | 95.55 | 18.91 | 47.58 |
| May 23 2023 | 11:42:00 | 16.34 | 4.260 | | 1171 | 10.08 | 142.4 | 38.98 | 75.20 |
| May 23 2023 | 11:43:00 | 16.41 | 4.182 | | 1032 | 11.77 | 118.3 | 30.12 | 78.85 |
| May 23 2023 | 11:44:00 | 14.31 | 6.340 | | 1462 | 16.57 | 150.1 | 27.05 | 119.9 |
| May 23 2023 | 11:45:00 | 14.05 | 6.404 | | 1661 | 18.62 | 93.28 | 27.76 | 123.2 |
| May 23 2023 | 11:46:00 | 14.62 | 5.841 | | 1825 | 15.69 | 118.5 | 33.87 | 109.3 |
| May 23 2023 | 11:47:00 | 14.68 | 5.700 | | 1278 | 15.15 | 59.37 | 22.18 | 111.1 |
| May 23 2023 | 11:48:00 | 15.07 | 5.389 | | 1127 | 13.52 | 63.12 | 26.95 | 96.05 |
| May 23 2023 | 11:49:00 | 15.70 | 4.688 | | 1174 | 10.84 | 101.8 | 35.81 | 85.60 |
| May 23 2023 | 11:50:00 | 16.20 | 4.324 | | 900.6 | 8.673 | 76.92 | 28.73 | 79.27 |
| May 23 2023 | 11:51:00 | 16.07 | 4.395 | | 859.2 | 8.072 | 66.30 | 26.96 | 75.06 |
| May 23 2023 | 11:52:00 | 16.46 | 4.036 | | 842.8 | 7.001 | 75.89 | 25.41 | 66.10 |
| May 23 2023 | 11:53:00 | 16.69 | 3.789 | | 772.5 | 6.069 | 66.81 | 23.68 | 58.65 |
| May 23 2023 | 11:54:00 | 16.95 | 3.559 | | 709.3 | 5.499 | 64.76 | 21.52 | 55.55 |
| May 23 2023 | 11:55:00 | 17.01 | 3.487 | | 664.5 | 5.049 | 58.15 | 20.18 | 52.39 |
| May 23 2023 | 11:56:00 | 17.28 | 3.330 | | 609.6 | 4.735 | 57.76 | 16.74 | 49.44 |
| May 23 2023 | 11:57:00 | 17.29 | 3.261 | | 602.8 | 4.614 | 55.70 | 18.06 | 45.73 |
| May 23 2023 | 11:58:00 | 17.50 | 3.053 | | 581.8 | 4.298 | 53.11 | 16.11 | 43.28 |
| May 23 2023 | 11:59:00 | 17.57 | 2.972 | | 589.0 | 4.092 | 58.73 | 16.24 | 41.26 |
| May 23 2023 | 12:00:00 | 17.92 | 2.624 | | 569.3 | 3.936 | 50.84 | 17.37 | 38.41 |
| May 23 2023 | 12:01:00 | 18.07 | 2.571 | | 535.0 | 3.956 | 49.70 | 15.15 | 38.00 |
| May 23 2023 | 12:02:00 | 18.11 | 2.468 | | 563.8 | 3.736 | 56.02 | 16.12 | 34.94 |
| May 23 2023 | 12:03:00 | 18.08 | 2.473 | | 628.0 | 3.566 | 73.81 | 18.24 | 33.69 |
| May 23 2023 | 12:04:00 | 18.23 | 2.360 | | 662.5 | 3.490 | 75.60 | 21.23 | 31.69 |
| May 23 2023 | 12:05:00 | 18.26 | 2.308 | | 686.8 | 3.424 | 72.13 | 23.25 | 31.37 |
| May 23 2023 | 12:06:00 | 18.24 | 2.332 | | 678.5 | 3.568 | 59.25 | 20.45 | 33.76 |
| May 23 2023 | 12:07:00 | 18.34 | 2.253 | | 782.2 | 3.908 | 124.4 | 35.11 | 30.06 |
| May 23 2023 | 12:08:00 | 18.03 | 2.626 | | 1225 | 4.845 | 192.8 | 54.69 | 37.11 |
| May 23 2023 | 12:09:00 | 16.26 | 4.430 | | 1747 | 7.619 | 298.2 | 72.77 | 68.38 |
| May 23 2023 | 12:10:00 | 16.14 | 4.326 | | 1697 | 9.378 | 196.7 | 62.07 | 81.76 |
| End of port 1 point 1 | | | | | | | | | |
| May 23 2023 | 12:11:00 | 16.47 | 3.925 | | 1242 | 8.763 | 113.0 | 51.26 | 76.89 |
| May 23 2023 | 12:12:00 | 16.85 | 3.583 | | 1058 | 7.801 | 115.1 | 37.85 | 67.94 |
| May 23 2023 | 12:13:00 | 17.12 | 3.436 | | 925.2 | 6.946 | 109.5 | 43.43 | 63.78 |
| May 23 2023 | 12:14:00 | 17.55 | 2.974 | | 877.0 | 6.399 | 109.1 | 32.08 | 54.95 |
| May 23 2023 | 12:15:00 | 17.81 | 2.718 | | 762.7 | 6.138 | 66.67 | 29.28 | 52.60 |
| May 23 2023 | 12:16:00 | 17.72 | 2.854 | | 656.1 | 6.226 | 68.24 | 22.42 | 49.60 |
| May 23 2023 | 12:17:00 | 17.71 | 2.875 | | 924.9 | 6.864 | 168.0 | 43.43 | 46.49 |
| May 23 2023 | 12:18:00 | 17.23 | 3.451 | | 1135 | 7.757 | 170.2 | 51.16 | 62.09 |
| May 23 2023 | 12:19:00 | 16.52 | 4.050 | | 1048 | 8.758 | 119.6 | 42.64 | 77.20 |
| May 23 2023 | 12:20:00 | 16.74 | 3.789 | | 855.1 | 8.886 | 108.5 | 32.57 | 66.53 |
| May 23 2023 | 12:21:00 | 16.28 | 4.248 | | 1392 | 9.897 | 198.9 | 48.02 | 71.67 |
| May 23 2023 | 12:22:00 | 15.21 | 5.394 | | 1647 | 12.91 | 133.7 | 38.39 | 101.7 |
| May 23 2023 | 12:23:00 | 14.74 | 5.731 | | 1063 | 14.88 | 50.43 | 27.08 | 120.7 |
| May 23 2023 | 12:24:00 | 14.68 | 5.813 | | 743.3 | 13.70 | 37.94 | 12.37 | 114.9 |
| May 23 2023 | 12:25:00 | 15.25 | 5.094 | | 669.7 | 11.19 | 48.09 | 15.65 | 97.29 |
| May 23 2023 | 12:26:00 | 16.07 | 4.417 | | 667.7 | 9.542 | 59.13 | 16.18 | 80.14 |



| MAQDAQ 1.0 | | | |
|---|---|---|---|
| Project Name: ODEQ ACI - Compliance Testing | Project Number: PROJ-021372 | CEMS Operator: SW | Unit/Condition: ACI |
| Run Length: 90 | Record Interval: 6 | Average Interval: 60 | Triplicate Sampling: True |
| Traverse: True | Ports: 1 | Points per port: 3 | DAQ Device: DT9806(01) |

| | | | | | | | | | |
|---|---|---|---|---|---|---|---|---|---|
| May 23 2023 | 12:27:00 | 16.37 | 4.129 | | 690.3 | 8.098 | 59.47 | 19.19 | 71.22 |
| May 23 2023 | 12:28:00 | 16.69 | 3.804 | | 631.5 | 6.579 | 57.58 | 17.97 | 63.95 |
| May 23 2023 | 12:29:00 | 17.19 | 3.293 | | 573.0 | 6.175 | 55.30 | 15.80 | 55.86 |
| May 23 2023 | 12:30:00 | 17.36 | 3.176 | | 581.8 | 5.548 | 55.51 | 15.83 | 51.09 |
| May 23 2023 | 12:31:00 | 17.56 | 2.974 | | 631.5 | 5.290 | 59.78 | 19.54 | 46.92 |
| May 23 2023 | 12:32:00 | 17.63 | 2.913 | | 603.4 | 4.994 | 64.21 | 18.11 | 43.93 |
| May 23 2023 | 12:33:00 | 17.81 | 2.741 | | 626.8 | 4.640 | 60.63 | 18.72 | 41.33 |
| May 23 2023 | 12:34:00 | 17.66 | 2.882 | | 655.0 | 4.571 | 59.47 | 20.38 | 40.71 |
| May 23 2023 | 12:35:00 | 17.76 | 2.777 | | 632.1 | 4.373 | 67.56 | 19.72 | 38.51 |
| May 23 2023 | 12:36:00 | 17.89 | 2.692 | | 612.5 | 4.285 | 63.65 | 18.77 | 37.15 |
| May 23 2023 | 12:37:00 | 18.05 | 2.416 | | 669.5 | 4.123 | 67.55 | 22.11 | 34.32 |
| May 23 2023 | 12:38:00 | 18.21 | 2.309 | | 647.8 | 4.028 | 62.78 | 23.72 | 32.65 |
| May 23 2023 | 12:39:00 | 18.15 | 2.404 | | 667.2 | 3.967 | 67.62 | 20.71 | 31.70 |
| May 23 2023 | 12:40:00 | 18.38 | 2.203 | | 648.3 | 3.924 | 62.41 | 21.49 | 30.35 |
| End of port 1 point 2 | | | | | | | | | |
| May 23 2023 | 12:41:00 | 18.26 | 2.323 | | 657.2 | 3.958 | 72.32 | 21.99 | 30.58 |
| May 23 2023 | 12:42:00 | 18.40 | 2.161 | | 653.8 | 3.751 | 70.78 | 20.95 | 28.44 |
| May 23 2023 | 12:43:00 | 18.27 | 2.302 | | 723.9 | 3.713 | 81.09 | 26.46 | 30.22 |
| May 23 2023 | 12:44:00 | 18.25 | 2.254 | | 748.8 | 3.699 | 84.57 | 23.64 | 29.76 |
| May 23 2023 | 12:45:00 | 18.35 | 2.215 | | 731.2 | 3.595 | 79.48 | 24.66 | 28.31 |
| May 23 2023 | 12:46:00 | 18.27 | 2.307 | | 760.1 | 3.477 | 79.95 | 26.86 | 28.28 |
| May 23 2023 | 12:47:00 | 18.20 | 2.320 | | 822.4 | 3.412 | 84.14 | 26.94 | 27.69 |
| May 23 2023 | 12:48:00 | 18.34 | 2.231 | | 776.2 | 3.519 | 79.55 | 28.48 | 26.23 |
| May 23 2023 | 12:49:00 | 18.44 | 2.111 | | 791.2 | 3.546 | 86.94 | 29.66 | 25.42 |
| May 23 2023 | 12:50:00 | 18.47 | 2.120 | | 808.0 | 3.542 | 86.70 | 29.22 | 25.73 |
| May 23 2023 | 12:51:00 | 17.91 | 2.781 | | 854.9 | 3.493 | 96.29 | 33.90 | 30.22 |
| May 23 2023 | 12:52:00 | 17.48 | 3.072 | | 916.0 | 3.482 | 97.29 | 33.29 | 32.49 |
| May 23 2023 | 12:53:00 | 17.56 | 3.016 | | 1026 | 3.693 | 104.8 | 48.18 | 33.55 |
| May 23 2023 | 12:54:00 | 17.21 | 3.232 | | 953.8 | 3.804 | 99.5 | 38.86 | 35.98 |
| May 23 2023 | 12:55:00 | 17.47 | 3.031 | | 1096 | 3.963 | 141.2 | 41.02 | 32.05 |
| May 23 2023 | 12:56:00 | 17.76 | 2.646 | | 1192 | 4.141 | 139.1 | 46.18 | 31.44 |
| May 23 2023 | 12:57:00 | 18.99 | 1.558 | | 790.3 | 3.996 | 95.61 | 34.62 | 21.66 |
| May 23 2023 | 12:58:00 | 19.15 | 1.474 | | 715.8 | 3.798 | 93.19 | 31.92 | 19.48 |
| May 23 2023 | 12:59:00 | 19.11 | 1.503 | | 702.3 | 3.822 | 98.64 | 30.82 | 19.14 |
| May 23 2023 | 13:00:00 | 19.17 | 1.454 | | 711.3 | 3.762 | 91.38 | 30.18 | 18.05 |
| May 23 2023 | 13:01:00 | 19.19 | 1.430 | | 687.9 | 3.857 | 95.29 | 30.31 | 17.14 |
| May 23 2023 | 13:02:00 | 19.16 | 1.458 | | 718.5 | 3.898 | 90.27 | 30.04 | 17.41 |
| May 23 2023 | 13:03:00 | 19.26 | 1.362 | | 675.5 | 3.748 | 96.45 | 29.04 | 16.28 |
| May 23 2023 | 13:04:00 | 19.18 | 1.407 | | 694.1 | 3.840 | 96.34 | 29.69 | 15.89 |
| May 23 2023 | 13:05:00 | 19.49 | 1.154 | | 622.3 | 3.890 | 86.59 | 28.80 | 14.22 |
| May 23 2023 | 13:06:00 | 19.47 | 1.158 | | 665.2 | 3.773 | 92.77 | 29.17 | 14.19 |
| May 23 2023 | 13:07:00 | 19.40 | 1.213 | | 692.5 | 3.805 | 102.3 | 33.04 | 14.15 |
| May 23 2023 | 13:08:00 | 19.36 | 1.285 | | 718.2 | 3.890 | 98.38 | 32.72 | 15.08 |
| May 23 2023 | 13:09:00 | 19.37 | 1.250 | | 721.2 | 3.915 | 105.1 | 33.99 | 14.35 |
| May 23 2023 | 13:10:00 | 19.38 | 1.247 | | 690.7 | 3.947 | 96.60 | 32.95 | 14.42 |
| End of port 1 point 3 | | | | | | | | | |

| | | | | | | | | | |
|---|---|---|---|---|---|---|---|---|---|
| | **Average:** | 17.47 | 3.076 | | 845.8 | 6.189 | 90.98 | 28.72 | 48.94 |
| | **Max:** | 19.49 | 6.404 | | 1825 | 18.62 | 298.2 | 72.77 | 123.2 |
| | **Min:** | 14.05 | 1.154 | | 535.0 | 3.412 | 37.94 | 12.37 | 14.15 |

| MAQDAQ 1.0 | | | |
|---|---|---|---|
| Project Name: ODEQ ACI - Compliance Testing | Project Number: PROJ-021372 | CEMS Operator: SW | Unit/Condition: ACI |
| Run Length: 90 | Record Interval: 6 | Average Interval: 60 | Triplicate Sampling: True |
| Traverse: True | Ports: 1 | Points per port: 3 | DAQ Device: DT9806(01) |

## Stratification Results

| **Port** | **Point** | O2 SN-719 | CO2 SN-719 | | CO SN-743 | SO2 SN-3 | THC SN-718 | CH4 SN-718 | NOx SN-695 |
|---|---|---|---|---|---|---|---|---|---|
| 1 | 1 | 16.73 | 3.788 | | 964.1 | 7.650 | 96.41 | 28.56 | 63.05 |
| 1 | 2 | 17.08 | 3.452 | | 796.2 | 7.089 | 83.74 | 25.47 | 60.14 |
| 1 | 3 | 18.62 | 1.962 | | 777.7 | 3.760 | 93.50 | 31.43 | 23.47 |
| | **Strat diff:** | 1.143 | 0.721 | | 118.1 | 1.484 | 5.193 | 2.943 | 14.16 |
| | **Strat %:** | 6.542 | 36.04 | | 8.073 | 39.02 | 8.197 | 10.59 | 51.99 |

| MAQDAQ 1.0 | | | |
|---|---|---|---|
| Project Name: ODEQ ACI - Compliance Testing | Project Number: PROJ-021372 | CEMS Operator: SW | Unit/Condition: ACI |
| Run Length: 90 | Record Interval: 6 | Average Interval: 60 | Triplicate Sampling: True |
| Traverse: True | Ports: 1 | Points per port: 3 | DAQ Device: DT9806(01) |

## Run 2 Post run bias - Part 2

## 11:40:00 - 13:10:00

| | | | | | | | | | |
|---|---|---|---|---|---|---|---|---|---|
| | **Name:** | O2 SN-719 | CO2 SN-719 | | CO SN-743 | SO2 SN-3 | THC SN-718 | CH4 SN-718 | NOx SN-695 |
| | **Make/Model:** | | | | | | | | |
| | **25A or 7E:** | 7E | 7E | | 7E | 7E | 25A | 25A | 7E |
| | | | | | | | | | |
| | **Run summary data** | | | | | | | | |
| | **Raw Avg:** | 17.47 | 3.076 | | 845.8 | 6.189 | 90.98 | 28.72 | 48.94 |
| | **Max:** | 19.49 | 6.404 | | 1825 | 18.62 | 298.2 | 72.77 | 123.2 |
| | **Min:** | 14.05 | 1.154 | | 535.0 | 3.412 | 37.94 | 12.37 | 14.15 |
| | | | | | | | | | |
| | **Cylinder Concentrations** | | | | | | | | |
| | **Zero:** | 0.000 | 0.000 | | 0.000 | 0.000 | 0.000 | 0.000 | 0.000 |
| | **Low:** | | | | | | 297.1 | 297.1 | |
| | **Mid:** | 10.04 | 9.946 | | 3997 | 15.20 | 495.7 | 495.7 | 127.6 |
| | **High:** | 23.21 | 22.54 | | 7911 | 30.29 | 874.8 | 874.8 | 279.5 |
| | | | | | | | | | |
| | **Calibration Readings** | | | | | | | | |
| | **Zero reading:** | 0.009 | 0.003 | | 1.800 | 0.128 | 0.180 | 0.030 | 0.096 |
| | **Low reading:** | | | | | | 308.5 | 307.1 | |
| | **Mid reading:** | 9.988 | 9.878 | | 4048 | 15.51 | 513.2 | 513.7 | 127.7 |
| | **High reading:** | 23.20 | 22.53 | | 7893 | 30.38 | 876.4 | 875.6 | 279.7 |
| | | | | | | | | | |
| | **EPA Method 7E Error Calculations** | | | | | | | | |
| **Zero %Err:** | **<2.0** | 0.039 | 0.013 | | 0.023 | 0.423 | N/A | N/A | 0.034 |
| **Mid %Err:** | **<2.0** | -0.224 | -0.302 | | 0.645 | 1.023 | N/A | N/A | 0.036 |
| **High %Err:** | **<2.0** | -0.043 | -0.044 | | -0.228 | 0.297 | N/A | N/A | 0.072 |
| | | | | | | | | | |
| | **EPA Method 25A Error Calculations** | | | | | | | | |
| **Zero %Err:** | **N/A** | N/A | N/A | | N/A | N/A | 0.180 | 0.030 | N/A |
| **Low %Err:** | **5% of cyl** | N/A | N/A | | N/A | N/A | 11.40 | 10.000 | N/A |
| **Mid %Err:** | **5% of cyl** | N/A | N/A | | N/A | N/A | 17.50 | 18.00 | N/A |
| **High %Err:** | **N/A** | N/A | N/A | | N/A | N/A | 1.600 | 0.800 | N/A |
| | | | | | | | | | |
| | **Initial Bias Data** | | | | | | | | |
| | **Zero reading:** | 0.018 | -0.060 | | 9.200 | 0.049 | 1.100 | 1.190 | 0.928 |
| | **Span reading:** | 22.90 | 9.702 | | 3947 | 15.23 | 513.4 | 513.6 | 131.3 |
| **Zero % bias:** | **<5.0** | 0.039 | -0.280 | | 0.094 | -0.261 | N/A | N/A | 0.298 |
| **Span % bias:** | **<5.0** | -1.293 | -0.781 | | -1.277 | -0.924 | N/A | N/A | 1.288 |
| | | | | | | | | | |
| | **Final Bias Data** | | | | | | | | |
| | **Zero reading:** | -0.057 | -0.014 | | 5.500 | 0.891 | 1.950 | 0.400 | 0.916 |
| | **Span reading:** | 22.89 | 9.832 | | 3808 | 15.67 | 513.7 | 514.6 | 132.8 |
| **Zero % bias:** | **<5.0** | -0.284 | -0.075 | | 0.047 | 2.519 | N/A | N/A | 0.293 |
| **Span % bias:** | **<5.0** | -1.336 | -0.204 | | -3.034 | 0.528 | N/A | N/A | 1.825 |
| **Zero % drift:** | **<3.0** | 0.323 | 0.205 | | 0.047 | 2.780 | N/A | N/A | 0.005 |
| **Span % drift:** | **<3.0** | 0.043 | 0.577 | | 1.757 | 1.452 | N/A | N/A | 0.537 |
| **Zero drift:** | **<3.0% span** | N/A | N/A | | N/A | N/A | -0.850 | 0.790 | N/A |
| **Span drift:** | **<3.0% span** | N/A | N/A | | N/A | N/A | -0.300 | -1.000 | N/A |
| | | | | | | | | | |
| | **Bias Corrected Averages** | | | | | | | | |
| | **Cor Avg:** | 17.72 | 3.158 | | 865.9 | 5.803 | 90.98 | 28.72 | 46.73 |

| MAQDAQ 1.0 | | | |
|---|---|---|---|
| Project Name: ODEQ ACI - Compliance Testing | Project Number: PROJ-021372 | CEMS Operator: SW | Unit/Condition: ACI |
| Run Length: 90 | Record Interval: 6 | Average Interval: 60 | Triplicate Sampling: True |
| Traverse: True | Ports: 1 | Points per port: 3 | DAQ Device: DT9806(01) |

## Run 3 Average Results - Run 2 - Part1

## 14:10:00 - 15:40:00

| | **Name:** | O2 SN-719 | CO2 SN-719 | | CO SN-743 | SO2 SN-3 | THC SN-718 | CH4 SN-718 | NOx SN-695 |
|---|---|---|---|---|---|---|---|---|---|
| | **Make/Model:** | | | | | | | | |
| May 23 2023 | 14:11:00 | 15.26 | 5.025 | | 1977 | 5.703 | 216.2 | 68.96 | 91.84 |
| May 23 2023 | 14:12:00 | 15.69 | 4.738 | | 1470 | 5.674 | 150.9 | 43.18 | 86.76 |
| May 23 2023 | 14:13:00 | 15.57 | 4.859 | | 1635 | 5.964 | 142.2 | 56.26 | 89.18 |
| May 23 2023 | 14:14:00 | 15.44 | 4.967 | | 1721 | 6.535 | 167.0 | 55.93 | 90.40 |
| May 23 2023 | 14:15:00 | 16.08 | 4.301 | | 1630 | 6.449 | 188.0 | 58.07 | 74.23 |
| May 23 2023 | 14:16:00 | 16.19 | 4.230 | | 1546 | 6.330 | 170.2 | 64.35 | 70.22 |
| May 23 2023 | 14:17:00 | 16.61 | 3.834 | | 1129 | 5.936 | 107.0 | 38.01 | 68.17 |
| May 23 2023 | 14:18:00 | 16.22 | 4.330 | | 1233 | 6.574 | 183.2 | 40.85 | 67.62 |
| May 23 2023 | 14:19:00 | 14.80 | 5.891 | | 2084 | 9.148 | 121.5 | 73.42 | 107.1 |
| May 23 2023 | 14:20:00 | 13.89 | 6.943 | | 1754 | 11.85 | 105.1 | 22.74 | 134.4 |
| May 23 2023 | 14:21:00 | 12.66 | 7.628 | | 1299 | 14.85 | 32.58 | 3.372 | 151.6 |
| May 23 2023 | 14:22:00 | 14.22 | 5.973 | | 1544 | 12.09 | 67.92 | 12.67 | 109.9 |
| May 23 2023 | 14:23:00 | 14.58 | 5.876 | | 1271 | 9.571 | 58.19 | 32.29 | 106.5 |
| May 23 2023 | 14:24:00 | 15.32 | 5.011 | | 1299 | 7.999 | 69.47 | 31.32 | 82.36 |
| May 23 2023 | 14:25:00 | 15.85 | 4.604 | | 1050 | 6.736 | 61.89 | 23.71 | 72.40 |
| May 23 2023 | 14:26:00 | 16.35 | 4.248 | | 935.6 | 5.857 | 60.18 | 29.96 | 64.81 |
| May 23 2023 | 14:27:00 | 16.64 | 3.739 | | 839.1 | 5.394 | 75.55 | 24.34 | 57.18 |
| May 23 2023 | 14:28:00 | 16.31 | 4.343 | | 1334 | 6.765 | 134.8 | 41.84 | 65.04 |
| May 23 2023 | 14:29:00 | 15.23 | 5.329 | | 1605 | 9.163 | 95.48 | 46.41 | 95.17 |
| May 23 2023 | 14:30:00 | 15.25 | 5.078 | | 1651 | 10.07 | 90.50 | 32.69 | 89.59 |
| May 23 2023 | 14:31:00 | 16.13 | 4.317 | | 1291 | 8.203 | 97.72 | 28.17 | 73.70 |
| May 23 2023 | 14:32:00 | 16.26 | 4.179 | | 1520 | 7.802 | 174.5 | 49.07 | 63.76 |
| May 23 2023 | 14:33:00 | 16.33 | 4.075 | | 1405 | 7.034 | 144.8 | 45.48 | 61.32 |
| May 23 2023 | 14:34:00 | 16.59 | 3.964 | | 1172 | 6.217 | 126.0 | 44.23 | 60.63 |
| May 23 2023 | 14:35:00 | 16.36 | 4.241 | | 1144 | 6.980 | 124.8 | 42.10 | 66.65 |
| May 23 2023 | 14:36:00 | 16.40 | 4.368 | | 1225 | 8.008 | 174.3 | 44.40 | 69.87 |
| May 23 2023 | 14:37:00 | 12.77 | 8.061 | | 1258 | 12.66 | 27.39 | 28.42 | 162.3 |
| May 23 2023 | 14:38:00 | 12.11 | 8.222 | | 554.3 | 17.21 | 11.42 | 3.815 | 163.7 |
| May 23 2023 | 14:39:00 | 12.75 | 7.531 | | 632.1 | 16.86 | 16.87 | 2.326 | 142.3 |
| May 23 2023 | 14:40:00 | 14.19 | 6.167 | | 1041 | 13.26 | 46.21 | 8.993 | 109.1 |
| End of port 1 point 1 | | | | | | | | | |
| May 23 2023 | 14:41:00 | 14.57 | 5.965 | | 1086 | 10.63 | 54.51 | 11.05 | 95.51 |
| May 23 2023 | 14:42:00 | 15.17 | 5.251 | | 990.5 | 8.757 | 62.86 | 15.35 | 81.47 |
| May 23 2023 | 14:43:00 | 15.95 | 4.589 | | 938.5 | 7.418 | 81.20 | 28.67 | 71.66 |
| May 23 2023 | 14:44:00 | 15.20 | 5.463 | | 1369 | 9.742 | 126.5 | 28.16 | 94.32 |
| May 23 2023 | 14:45:00 | 14.14 | 6.274 | | 1262 | 12.68 | 32.35 | 12.44 | 113.1 |
| May 23 2023 | 14:46:00 | 14.26 | 6.167 | | 907.7 | 12.17 | 28.37 | 11.83 | 113.4 |
| May 23 2023 | 14:47:00 | 14.12 | 6.494 | | 949.9 | 12.85 | 27.38 | 12.99 | 115.8 |
| May 23 2023 | 14:48:00 | 13.22 | 7.187 | | 808.7 | 16.32 | 13.21 | 8.151 | 143.1 |
| May 23 2023 | 14:49:00 | 13.31 | 7.265 | | 559.7 | 14.20 | 16.64 | 2.873 | 131.9 |
| May 23 2023 | 14:50:00 | 13.63 | 6.752 | | 527.0 | 12.11 | 12.61 | 4.002 | 117.6 |
| May 23 2023 | 14:51:00 | 14.09 | 6.318 | | 514.2 | 9.667 | 21.74 | 4.196 | 100.5 |
| May 23 2023 | 14:52:00 | 14.60 | 5.818 | | 602.0 | 7.555 | 24.92 | 7.882 | 89.16 |
| May 23 2023 | 14:53:00 | 14.90 | 5.516 | | 556.9 | 6.094 | 29.98 | 6.940 | 82.92 |
| May 23 2023 | 14:54:00 | 15.42 | 5.114 | | 681.0 | 6.027 | 43.47 | 11.92 | 73.77 |
| May 23 2023 | 14:55:00 | 16.23 | 4.334 | | 785.6 | 6.158 | 57.48 | 16.67 | 65.63 |
| May 23 2023 | 14:56:00 | 16.02 | 4.497 | | 776.3 | 5.600 | 59.11 | 18.33 | 64.75 |



| MAQDAQ 1.0 | | | |
|---|---|---|---|
| Project Name: ODEQ ACI - Compliance Testing | Project Number: PROJ-021372 | CEMS Operator: SW | Unit/Condition: ACI |
| Run Length: 90 | Record Interval: 6 | Average Interval: 60 | Triplicate Sampling: True |
| Traverse: True | Ports: 1 | Points per port: 3 | DAQ Device: DT9806(01) |

| | | | | | | | | | |
|---|---|---|---|---|---|---|---|---|---|
| May 23 2023 | 14:57:00 | 16.44 | 4.116 | | 791.3 | 4.738 | 65.31 | 19.32 | 58.95 |
| May 23 2023 | 14:58:00 | 16.48 | 4.068 | | 776.9 | 4.440 | 65.83 | 19.50 | 56.55 |
| May 23 2023 | 14:59:00 | 16.75 | 3.732 | | 834.1 | 4.009 | 75.71 | 21.35 | 50.80 |
| May 23 2023 | 15:00:00 | 17.19 | 3.468 | | 731.6 | 3.818 | 74.78 | 21.66 | 46.74 |
| May 23 2023 | 15:01:00 | 16.92 | 3.589 | | 838.1 | 3.960 | 69.56 | 25.90 | 48.87 |
| May 23 2023 | 15:02:00 | 17.09 | 3.609 | | 845.6 | 4.052 | 75.73 | 25.30 | 47.71 |
| May 23 2023 | 15:03:00 | 16.84 | 3.669 | | 863.8 | 4.001 | 83.95 | 24.73 | 46.94 |
| May 23 2023 | 15:04:00 | 16.20 | 4.671 | | 1130 | 4.411 | 78.52 | 32.94 | 68.49 |
| May 23 2023 | 15:05:00 | 14.40 | 6.003 | | 722.8 | 6.523 | 39.03 | 11.04 | 102.2 |
| May 23 2023 | 15:06:00 | 12.95 | 7.798 | | 557.4 | 8.933 | 17.94 | 6.525 | 141.5 |
| May 23 2023 | 15:07:00 | 11.60 | 9.073 | | 502.1 | 12.09 | 7.330 | 4.983 | 164.4 |
| May 23 2023 | 15:08:00 | 10.82 | 9.523 | | 258.2 | 12.68 | 3.759 | 0.193 | 161.4 |
| May 23 2023 | 15:09:00 | 11.76 | 8.712 | | 309.4 | 10.23 | 5.011 | 1.195 | 132.1 |
| May 23 2023 | 15:10:00 | 12.19 | 8.253 | | 393.6 | 8.686 | 8.204 | 0.466 | 125.7 |
| End of port 1 point 2 | | | | | | | | | |
| May 23 2023 | 15:11:00 | 12.51 | 8.010 | | 465.7 | 7.582 | 8.316 | 2.509 | 111.8 |
| May 23 2023 | 15:12:00 | 13.29 | 7.166 | | 560.5 | 6.250 | 18.96 | 3.449 | 95.30 |
| May 23 2023 | 15:13:00 | 13.56 | 6.827 | | 661.6 | 4.878 | 28.30 | 8.672 | 89.01 |
| May 23 2023 | 15:14:00 | 14.37 | 6.113 | | 794.4 | 3.815 | 42.12 | 11.53 | 80.64 |
| May 23 2023 | 15:15:00 | 14.20 | 6.474 | | 935.8 | 3.976 | 45.01 | 18.72 | 95.39 |
| May 23 2023 | 15:16:00 | 12.04 | 8.714 | | 558.8 | 9.047 | 8.218 | 7.090 | 176.0 |
| May 23 2023 | 15:17:00 | 11.33 | 9.038 | | 286.4 | 15.51 | 3.745 | 0.705 | 188.1 |
| May 23 2023 | 15:18:00 | 12.56 | 7.953 | | 368.8 | 12.79 | 7.199 | 0.899 | 126.0 |
| May 23 2023 | 15:19:00 | 13.23 | 7.382 | | 780.7 | 9.292 | 20.02 | 4.033 | 119.7 |
| May 23 2023 | 15:20:00 | 12.89 | 7.865 | | 697.9 | 9.989 | 9.687 | 6.460 | 134.0 |
| May 23 2023 | 15:21:00 | 11.90 | 8.238 | | 437.3 | 12.28 | 11.44 | 0.162 | 136.3 |
| May 23 2023 | 15:22:00 | 12.68 | 7.657 | | 550.4 | 8.169 | 7.728 | 7.551 | 109.1 |
| May 23 2023 | 15:23:00 | 13.29 | 7.081 | | 656.4 | 5.729 | 29.92 | 8.727 | 95.89 |
| May 23 2023 | 15:24:00 | 14.20 | 6.332 | | 764.7 | 4.427 | 46.73 | 11.73 | 85.66 |
| May 23 2023 | 15:25:00 | 14.49 | 6.076 | | 856.9 | 3.715 | 54.82 | 18.89 | 80.70 |
| May 23 2023 | 15:26:00 | 14.45 | 6.066 | | 940.0 | 3.384 | 56.68 | 19.84 | 76.90 |
| May 23 2023 | 15:27:00 | 14.93 | 5.466 | | 872.5 | 3.141 | 59.27 | 18.14 | 68.17 |
| May 23 2023 | 15:28:00 | 15.21 | 5.205 | | 852.5 | 2.937 | 54.69 | 20.22 | 62.80 |
| May 23 2023 | 15:29:00 | 15.51 | 5.023 | | 936.8 | 2.844 | 69.23 | 20.44 | 58.59 |
| May 23 2023 | 15:30:00 | 15.96 | 4.451 | | 910.1 | 2.919 | 74.04 | 22.41 | 50.26 |
| May 23 2023 | 15:31:00 | 16.37 | 4.191 | | 931.3 | 2.945 | 75.01 | 25.33 | 47.95 |
| May 23 2023 | 15:32:00 | 16.24 | 4.583 | | 891.9 | 3.258 | 69.41 | 24.85 | 64.01 |
| May 23 2023 | 15:33:00 | 14.22 | 6.371 | | 781.1 | 6.393 | 38.47 | 9.362 | 111.3 |
| May 23 2023 | 15:34:00 | 12.87 | 7.827 | | 951.1 | 10.76 | 15.75 | 13.78 | 155.5 |
| May 23 2023 | 15:35:00 | 9.865 | 10.80 | | 285.8 | 17.34 | 4.381 | 0.549 | 217.2 |
| May 23 2023 | 15:36:00 | 10.48 | 9.673 | | 117.6 | 15.42 | 2.920 | 0.070 | 175.8 |
| May 23 2023 | 15:37:00 | 11.83 | 8.617 | | 172.9 | 10.69 | 2.632 | 0.736 | 135.3 |
| May 23 2023 | 15:38:00 | 13.15 | 7.264 | | 298.0 | 7.907 | 4.078 | 1.575 | 103.1 |
| May 23 2023 | 15:39:00 | 13.69 | 6.697 | | 490.3 | 5.866 | 14.54 | 3.275 | 89.42 |
| May 23 2023 | 15:40:00 | 14.39 | 6.120 | | 611.2 | 4.589 | 21.35 | 6.381 | 80.86 |
| End of port 1 point 3 | | | | | | | | | |

| | | | | | | | | | |
|---|---|---|---|---|---|---|---|---|---|
| | **Average:** | 14.51 | 5.985 | | 917.1 | 8.125 | 61.22 | 20.13 | 97.51 |
| | **Max:** | 17.19 | 10.80 | | 2084 | 17.34 | 216.2 | 73.42 | 217.2 |
| | **Min:** | 9.865 | 3.468 | | 117.6 | 2.844 | 2.632 | 0.070 | 46.74 |

| MAQDAQ 1.0 | | | |
|---|---|---|---|
| Project Name: ODEQ ACI - Compliance Testing | Project Number: PROJ-021372 | CEMS Operator: SW | Unit/Condition: ACI |
| Run Length: 90 | Record Interval: 6 | Average Interval: 60 | Triplicate Sampling: True |
| Traverse: True | Ports: 1 | Points per port: 3 | DAQ Device: DT9806(01) |

## Stratification Results

| **Port** | **Point** | O2 SN-719 | CO2 SN-719 | | CO SN-743 | SO2 SN-3 | THC SN-718 | CH4 SN-718 | NOx SN-695 |
|---|---|---|---|---|---|---|---|---|---|
| 1 | 1 | 15.27 | 5.160 | | 1330 | 8.875 | 113.3 | 34.90 | 91.00 |
| 1 | 2 | 14.74 | 5.711 | | 749.2 | 8.351 | 46.55 | 14.05 | 92.15 |
| 1 | 3 | 13.54 | 7.082 | | 652.7 | 7.226 | 29.27 | 10.44 | 109.5 |
| | **Strat diff:** | 0.753 | 1.098 | | 419.4 | 0.724 | 50.26 | 15.10 | 11.95 |
| | **Strat %:** | 6.728 | 4.567 | | 46.05 | 8.887 | 79.73 | 76.29 | 6.715 |

| MAQDAQ 1.0 | | | |
|---|---|---|---|
| Project Name: ODEQ ACI - Compliance Testing | Project Number: PROJ-021372 | CEMS Operator: SW | Unit/Condition: ACI |
| Run Length: 90 | Record Interval: 6 | Average Interval: 60 | Triplicate Sampling: True |
| Traverse: True | Ports: 1 | Points per port: 3 | DAQ Device: DT9806(01) |

## Run 3 Post run bias - Run 2 - Part1

## 14:10:00 - 15:40:00

| | Name: | O2 SN-719 | CO2 SN-719 | | CO SN-743 | SO2 SN-3 | THC SN-718 | CH4 SN-718 | NOx SN-695 |
|---|---|---|---|---|---|---|---|---|---|
| | **Make/Model:** | | | | | | | | |
| | **25A or 7E:** | 7E | 7E | | 7E | 7E | 25A | 25A | 7E |
| **Run summary data** | | | | | | | | | |
| | **Raw Avg:** | 14.51 | 5.985 | | 917.1 | 8.125 | 61.22 | 20.13 | 97.51 |
| | **Max:** | 17.19 | 10.80 | | 2084 | 17.34 | 216.2 | 73.42 | 217.2 |
| | **Min:** | 9.865 | 3.468 | | 117.6 | 2.844 | 2.632 | 0.070 | 46.74 |
| **Cylinder Concentrations** | | | | | | | | | |
| | **Zero:** | 0.000 | 0.000 | | 0.000 | 0.000 | 0.000 | 0.000 | 0.000 |
| | **Low:** | | | | | | 297.1 | 297.1 | |
| | **Mid:** | 10.04 | 9.946 | | 3997 | 15.20 | 495.7 | 495.7 | 127.6 |
| | **High:** | 23.21 | 22.54 | | 7911 | 30.29 | 874.8 | 874.8 | 279.5 |
| **Calibration Readings** | | | | | | | | | |
| | **Zero reading:** | 0.009 | 0.003 | | 1.800 | 0.128 | 0.180 | 0.030 | 0.096 |
| | **Low reading:** | | | | | | 308.5 | 307.1 | |
| | **Mid reading:** | 9.988 | 9.878 | | 4048 | 15.51 | 513.2 | 513.7 | 127.7 |
| | **High reading:** | 23.20 | 22.53 | | 7893 | 30.38 | 876.4 | 875.6 | 279.7 |
| **EPA Method 7E Error Calculations** | | | | | | | | | |
| **Zero %Err:** | **<2.0** | 0.039 | 0.013 | | 0.023 | 0.423 | N/A | N/A | 0.034 |
| **Mid %Err:** | **<2.0** | -0.224 | -0.302 | | 0.645 | 1.023 | N/A | N/A | 0.036 |
| **High %Err:** | **<2.0** | -0.043 | -0.044 | | -0.228 | 0.297 | N/A | N/A | 0.072 |
| **EPA Method 25A Error Calculations** | | | | | | | | | |
| **Zero %Err:** | **N/A** | N/A | N/A | | N/A | N/A | 0.180 | 0.030 | N/A |
| **Low %Err:** | **5% of cyl** | N/A | N/A | | N/A | N/A | 11.40 | 10.000 | N/A |
| **Mid %Err:** | **5% of cyl** | N/A | N/A | | N/A | N/A | 17.50 | 18.00 | N/A |
| **High %Err:** | **N/A** | N/A | N/A | | N/A | N/A | 1.600 | 0.800 | N/A |
| **Initial Bias Data** | | | | | | | | | |
| | **Zero reading:** | -0.057 | -0.014 | | 5.500 | 0.891 | 1.950 | 0.400 | 0.916 |
| | **Span reading:** | 22.89 | 9.832 | | 3808 | 15.67 | 513.7 | 514.6 | 132.8 |
| **Zero % bias:** | **<5.0** | -0.284 | -0.075 | | 0.047 | 2.519 | N/A | N/A | 0.293 |
| **Span % bias:** | **<5.0** | -1.336 | -0.204 | | -3.034 | 0.528 | N/A | N/A | 1.825 |
| **Final Bias Data** | | | | | | | | | |
| | **Zero reading:** | 0.141 | 0.033 | | 5.500 | 1.126 | 0.730 | 0.370 | 3.516 |
| | **Span reading:** | 22.91 | 9.801 | | 3962 | 15.20 | 513.9 | 513.8 | 127.3 |
| **Zero % bias:** | **<5.0** | 0.569 | 0.133 | | 0.047 | 3.295 | N/A | N/A | 1.224 |
| **Span % bias:** | **<5.0** | -1.250 | -0.342 | | -1.087 | -1.023 | N/A | N/A | -0.143 |
| **Zero % drift:** | **<3.0** | 0.853 | 0.208 | | 0.000 | 0.776 | N/A | N/A | 0.931 |
| **Span % drift:** | **<3.0** | 0.087 | 0.138 | | 1.947 | 1.551 | N/A | N/A | 1.968 |
| **Zero drift:** | **<3.0% span** | N/A | N/A | | N/A | N/A | 1.220 | 0.030 | N/A |
| **Span drift:** | **<3.0% span** | N/A | N/A | | N/A | N/A | -0.200 | 0.800 | N/A |
| **Bias Corrected Averages** | | | | | | | | | |
| | **Cor Avg:** | 14.69 | 6.060 | | 939.2 | 7.498 | 61.22 | 20.13 | 95.12 |

| MAQDAQ 1.0 | | | |
|---|---|---|---|
| Project Name: ODEQ ACI - Compliance Testing | Project Number: PROJ-021372 | CEMS Operator: SW | Unit/Condition: ACI |
| Run Length: 90 | Record Interval: 6 | Average Interval: 60 | Triplicate Sampling: True |
| Traverse: True | Ports: 1 | Points per port: 3 | DAQ Device: DT9806(01) |

## Run 4 Average Results - Run 2 - Part 2

## 15:57:00 - 17:27:00

| | **Name:** | O2 SN-719 | CO2 SN-719 | | CO SN-743 | SO2 SN-3 | THC SN-718 | CH4 SN-718 | NOx SN-695 |
|---|---|---|---|---|---|---|---|---|---|
| | **Make/Model:** | | | | | | | | |
| May 23 2023 | 15:58:00 | 10.68 | 10.17 | | 459.7 | 14.31 | 6.448 | 4.206 | 197.0 |
| May 23 2023 | 15:59:00 | 11.13 | 9.326 | | 243.8 | 19.29 | 7.352 | 0.124 | 170.3 |
| May 23 2023 | 16:00:00 | 10.67 | 9.529 | | 174.6 | 19.37 | 2.380 | 0.525 | 181.8 |
| May 23 2023 | 16:01:00 | 12.01 | 8.412 | | 233.4 | 14.58 | 3.398 | 0.495 | 149.1 |
| May 23 2023 | 16:02:00 | 12.41 | 7.867 | | 221.9 | 12.90 | 1.803 | 0.161 | 144.2 |
| May 23 2023 | 16:03:00 | 14.28 | 6.206 | | 467.5 | 10.04 | 15.91 | 2.113 | 106.4 |
| May 23 2023 | 16:04:00 | 14.79 | 5.694 | | 586.5 | 7.949 | 23.06 | 5.864 | 97.56 |
| May 23 2023 | 16:05:00 | 15.07 | 5.409 | | 707.7 | 6.493 | 34.90 | 10.64 | 89.04 |
| May 23 2023 | 16:06:00 | 15.45 | 4.891 | | 718.5 | 5.430 | 39.96 | 11.73 | 80.31 |
| May 23 2023 | 16:07:00 | 15.59 | 4.931 | | 759.2 | 4.903 | 47.49 | 15.61 | 76.43 |
| May 23 2023 | 16:08:00 | 15.84 | 4.578 | | 752.7 | 4.396 | 53.86 | 16.10 | 69.84 |
| May 23 2023 | 16:09:00 | 16.03 | 4.417 | | 800.2 | 3.904 | 62.09 | 19.70 | 66.42 |
| May 23 2023 | 16:10:00 | 16.22 | 4.337 | | 830.9 | 3.501 | 69.93 | 21.41 | 58.96 |
| May 23 2023 | 16:11:00 | 16.26 | 4.308 | | 844.1 | 3.314 | 75.15 | 23.50 | 58.08 |
| May 23 2023 | 16:12:00 | 16.42 | 4.021 | | 846.8 | 3.195 | 77.44 | 23.92 | 52.18 |
| May 23 2023 | 16:13:00 | 16.71 | 3.817 | | 852.5 | 3.292 | 84.10 | 25.95 | 49.53 |
| May 23 2023 | 16:14:00 | 16.88 | 3.670 | | 913.5 | 3.189 | 92.17 | 26.46 | 44.32 |
| May 23 2023 | 16:15:00 | 16.95 | 3.610 | | 950.1 | 3.327 | 96.34 | 29.00 | 43.96 |
| May 23 2023 | 16:16:00 | 17.16 | 3.328 | | 974.1 | 3.243 | 101.9 | 29.97 | 39.27 |
| May 23 2023 | 16:17:00 | 17.31 | 3.445 | | 1062 | 3.367 | 110.7 | 32.99 | 39.35 |
| May 23 2023 | 16:18:00 | 14.65 | 6.381 | | 1088 | 4.561 | 71.87 | 26.48 | 110.2 |
| May 23 2023 | 16:19:00 | 11.17 | 9.367 | | 401.5 | 8.721 | 10.12 | 3.372 | 189.3 |
| May 23 2023 | 16:20:00 | 11.24 | 8.869 | | 212.1 | 11.21 | 3.583 | 0.464 | 161.7 |
| May 23 2023 | 16:21:00 | 13.65 | 6.423 | | 409.4 | 8.501 | 11.94 | 2.460 | 105.4 |
| May 23 2023 | 16:22:00 | 15.00 | 5.437 | | 616.7 | 5.369 | 30.25 | 9.311 | 84.50 |
| May 23 2023 | 16:23:00 | 15.90 | 4.432 | | 750.0 | 4.156 | 49.10 | 13.74 | 66.39 |
| May 23 2023 | 16:24:00 | 16.63 | 3.829 | | 824.7 | 3.674 | 57.21 | 16.22 | 56.87 |
| May 23 2023 | 16:25:00 | 17.03 | 3.432 | | 868.8 | 3.497 | 65.19 | 19.13 | 47.77 |
| May 23 2023 | 16:26:00 | 17.42 | 3.133 | | 858.4 | 3.395 | 71.10 | 22.19 | 40.06 |
| May 23 2023 | 16:27:00 | 17.44 | 3.079 | | 918.2 | 3.433 | 78.44 | 23.78 | 38.86 |
| End of port 1 point 1 | | | | | | | | | |
| May 23 2023 | 16:28:00 | 17.71 | 2.802 | | 895.3 | 3.334 | 79.39 | 25.38 | 35.03 |
| May 23 2023 | 16:29:00 | 17.83 | 2.725 | | 903.5 | 3.393 | 78.74 | 26.40 | 34.21 |
| May 23 2023 | 16:30:00 | 17.98 | 2.594 | | 812.7 | 3.500 | 71.25 | 22.29 | 31.78 |
| May 23 2023 | 16:31:00 | 18.04 | 2.474 | | 863.1 | 3.269 | 86.53 | 26.29 | 29.62 |
| May 23 2023 | 16:32:00 | 18.08 | 2.494 | | 925.7 | 3.422 | 98.00 | 29.96 | 29.83 |
| May 23 2023 | 16:33:00 | 18.22 | 2.329 | | 939.3 | 3.518 | 101.3 | 30.78 | 26.95 |
| May 23 2023 | 16:34:00 | 18.36 | 2.224 | | 935.9 | 3.526 | 107.1 | 32.23 | 25.76 |
| May 23 2023 | 16:35:00 | 18.46 | 2.116 | | 982.9 | 3.690 | 117.4 | 32.19 | 24.78 |
| May 23 2023 | 16:36:00 | 18.55 | 2.047 | | 984.4 | 3.834 | 118.9 | 34.96 | 23.67 |
| May 23 2023 | 16:37:00 | 18.50 | 2.106 | | 1078 | 3.770 | 121.5 | 37.23 | 23.77 |
| May 23 2023 | 16:38:00 | 18.54 | 2.032 | | 1114 | 4.018 | 126.8 | 38.95 | 22.78 |
| May 23 2023 | 16:39:00 | 18.62 | 1.995 | | 1021 | 3.890 | 113.2 | 34.81 | 23.33 |
| May 23 2023 | 16:40:00 | 18.61 | 1.964 | | 1008 | 4.055 | 118.5 | 34.13 | 22.78 |
| May 23 2023 | 16:41:00 | 18.67 | 1.927 | | 1003 | 4.134 | 110.9 | 35.95 | 23.60 |
| May 23 2023 | 16:42:00 | 18.56 | 2.140 | | 913.7 | 4.132 | 98.82 | 30.45 | 28.79 |
| May 23 2023 | 16:43:00 | 18.27 | 2.332 | | 906.7 | 4.366 | 112.0 | 28.83 | 33.63 |

| | | | | | | | | | |
|---|---|---|---|---|---|---|---|---|---|
| May 23 2023 | 16:44:00 | 18.25 | 2.342 | | 923.3 | 4.466 | 110.1 | 29.40 | 34.54 |
| May 23 2023 | 16:45:00 | 18.09 | 2.450 | | 1090 | 4.352 | 119.1 | 30.57 | 36.99 |
| May 23 2023 | 16:46:00 | 18.14 | 2.442 | | 1058 | 4.628 | 123.1 | 31.01 | 36.04 |
| May 23 2023 | 16:47:00 | 18.14 | 2.380 | | 1107 | 4.632 | 135.0 | 34.70 | 32.71 |
| May 23 2023 | 16:48:00 | 18.24 | 2.369 | | 1113 | 4.746 | 131.3 | 36.00 | 35.12 |
| May 23 2023 | 16:49:00 | 18.10 | 2.404 | | 1049 | 4.810 | 117.1 | 30.72 | 37.94 |
| May 23 2023 | 16:50:00 | 18.19 | 2.390 | | 1030 | 4.681 | 99.5 | 29.08 | 36.81 |
| May 23 2023 | 16:51:00 | 18.16 | 2.355 | | 1042 | 4.709 | 99.9 | 30.54 | 35.85 |
| May 23 2023 | 16:52:00 | 18.39 | 2.123 | | 1018 | 4.745 | 106.5 | 28.30 | 32.83 |
| May 23 2023 | 16:53:00 | 18.53 | 2.043 | | 1081 | 4.687 | 120.5 | 33.26 | 28.83 |
| May 23 2023 | 16:54:00 | 18.64 | 1.923 | | 1140 | 4.721 | 128.8 | 36.03 | 25.83 |
| May 23 2023 | 16:55:00 | 18.79 | 1.794 | | 1127 | 4.810 | 133.9 | 37.51 | 24.06 |
| May 23 2023 | 16:56:00 | 18.85 | 1.736 | | 1095 | 4.802 | 136.5 | 36.84 | 22.15 |
| May 23 2023 | 16:57:00 | 18.94 | 1.651 | | 1124 | 4.861 | 136.4 | 41.79 | 20.97 |
| End of port 1 point 2 | | | | | | | | | |
| May 23 2023 | 16:58:00 | 19.00 | 1.572 | | 1103 | 4.744 | 126.5 | 42.74 | 19.29 |
| May 23 2023 | 16:59:00 | 19.07 | 1.567 | | 1051 | 4.723 | 128.9 | 36.35 | 19.34 |
| May 23 2023 | 17:00:00 | 19.06 | 1.557 | | 1119 | 4.826 | 135.7 | 41.17 | 18.57 |
| May 23 2023 | 17:01:00 | 19.12 | 1.502 | | 1057 | 4.931 | 132.2 | 40.95 | 17.68 |
| May 23 2023 | 17:02:00 | 19.14 | 1.464 | | 1070 | 4.827 | 124.2 | 41.96 | 16.81 |
| May 23 2023 | 17:03:00 | 19.23 | 1.402 | | 1017 | 4.843 | 125.8 | 39.97 | 15.91 |
| May 23 2023 | 17:04:00 | 19.29 | 1.320 | | 1011 | 4.900 | 121.8 | 41.98 | 15.03 |
| May 23 2023 | 17:05:00 | 19.35 | 1.279 | | 969.1 | 4.931 | 121.5 | 39.93 | 14.27 |
| May 23 2023 | 17:06:00 | 19.42 | 1.240 | | 962.0 | 4.838 | 108.1 | 36.84 | 14.07 |
| May 23 2023 | 17:07:00 | 19.39 | 1.251 | | 972.3 | 4.851 | 114.9 | 38.46 | 13.50 |
| May 23 2023 | 17:08:00 | 19.46 | 1.170 | | 920.7 | 4.844 | 109.7 | 36.16 | 12.74 |
| May 23 2023 | 17:09:00 | 19.46 | 1.173 | | 940.5 | 4.834 | 111.8 | 37.05 | 12.66 |
| May 23 2023 | 17:10:00 | 19.48 | 1.155 | | 902.2 | 4.763 | 107.2 | 35.79 | 12.34 |
| May 23 2023 | 17:11:00 | 19.54 | 1.117 | | 852.4 | 4.650 | 102.5 | 33.42 | 12.02 |
| May 23 2023 | 17:12:00 | 19.54 | 1.104 | | 858.0 | 4.793 | 98.59 | 36.38 | 12.04 |
| May 23 2023 | 17:13:00 | 19.58 | 1.067 | | 833.5 | 4.784 | 98.41 | 32.95 | 11.23 |
| May 23 2023 | 17:14:00 | 19.59 | 1.071 | | 821.3 | 4.765 | 97.70 | 35.70 | 11.22 |
| May 23 2023 | 17:15:00 | 19.66 | 1.005 | | 793.3 | 4.710 | 101.2 | 31.60 | 10.47 |
| May 23 2023 | 17:16:00 | 19.63 | 1.019 | | 820.0 | 4.651 | 96.70 | 30.42 | 10.88 |
| May 23 2023 | 17:17:00 | 19.60 | 1.038 | | 801.4 | 4.643 | 92.63 | 31.62 | 11.07 |
| May 23 2023 | 17:18:00 | 19.64 | 1.003 | | 792.0 | 4.593 | 89.65 | 32.18 | 10.77 |
| May 23 2023 | 17:19:00 | 19.65 | 1.003 | | 779.2 | 4.585 | 91.64 | 31.64 | 10.43 |
| May 23 2023 | 17:20:00 | 19.71 | 0.939 | | 790.3 | 4.595 | 92.01 | 31.14 | 9.462 |
| May 23 2023 | 17:21:00 | 19.76 | 0.908 | | 731.1 | 4.467 | 84.47 | 30.55 | 9.159 |
| May 23 2023 | 17:22:00 | 19.73 | 0.937 | | 785.0 | 4.585 | 92.95 | 34.73 | 9.360 |
| May 23 2023 | 17:23:00 | 19.74 | 0.903 | | 778.3 | 4.443 | 90.07 | 33.54 | 8.988 |
| May 23 2023 | 17:24:00 | 19.83 | 0.828 | | 719.1 | 4.474 | 81.62 | 32.05 | 8.885 |
| May 23 2023 | 17:25:00 | 19.80 | 0.881 | | 728.2 | 4.475 | 84.78 | 30.64 | 9.167 |
| May 23 2023 | 17:26:00 | 19.78 | 0.871 | | 759.9 | 4.546 | 86.94 | 31.23 | 9.153 |
| May 23 2023 | 17:27:00 | 19.79 | 0.874 | | 780.4 | 4.383 | 88.19 | 31.19 | 9.084 |
| End of port 1 point 3 | | | | | | | | | |

| | | | | | | | | | |
|---|---|---|---|---|---|---|---|---|---|
| | **Average:** | 17.59 | 2.970 | | 857.2 | 5.256 | 88.35 | 27.38 | 44.13 |
| | **Max:** | 19.83 | 10.17 | | 1140 | 19.37 | 136.5 | 42.74 | 197.0 |
| | **Min:** | 10.67 | 0.828 | | 174.6 | 3.189 | 1.803 | 0.124 | 8.885 |

| MAQDAQ 1.0 | | | |
|---|---|---|---|
| Project Name: ODEQ ACI - Compliance Testing | Project Number: PROJ-021372 | CEMS Operator: SW | Unit/Condition: ACI |
| Run Length: 90 | Record Interval: 6 | Average Interval: 60 | Triplicate Sampling: True |
| Traverse: True | Ports: 1 | Points per port: 3 | DAQ Device: DT9806(01) |

## Stratification Results

| **Port** | **Point** | O2 SN-719 | CO2 SN-719 | | CO SN-743 | SO2 SN-3 | THC SN-718 | CH4 SN-718 | NOx SN-695 |
|---|---|---|---|---|---|---|---|---|---|
| 1 | 1 | 14.91 | 5.574 | | 682.3 | 6.779 | 49.38 | 15.02 | 90.27 |
| 1 | 2 | 18.37 | 2.210 | | 1020 | 4.214 | 112.2 | 32.45 | 29.23 |
| 1 | 3 | 19.52 | 1.114 | | 872.5 | 4.685 | 103.4 | 35.35 | 12.28 |
| | **Strat diff:** | 1.920 | 2.608 | | 161.7 | 1.553 | 23.87 | 7.743 | 46.34 |
| | **Strat %:** | 4.375 | 87.93 | | 20.50 | 29.72 | 44.09 | 45.59 | 72.04 |

| MAQDAQ 1.0 | | | |
|---|---|---|---|
| Project Name: ODEQ ACI - Compliance Testing | Project Number: PROJ-021372 | CEMS Operator: SW | Unit/Condition: ACI |
| Run Length: 90 | Record Interval: 6 | Average Interval: 60 | Triplicate Sampling: True |
| Traverse: True | Ports: 1 | Points per port: 3 | DAQ Device: DT9806(01) |

## Run 4 Post run bias - Run 2 - Part 2

## 15:57:00 - 17:27:00

| | | | | | | | | | |
|---|---|---|---|---|---|---|---|---|---|
| | **Name:** | O2 SN-719 | CO2 SN-719 | | CO SN-743 | SO2 SN-3 | THC SN-718 | CH4 SN-718 | NOx SN-695 |
| | **Make/Model:** | | | | | | | | |
| | **25A or 7E:** | 7E | 7E | | 7E | 7E | 25A | 25A | 7E |
| | **Run summary data** | | | | | | | | |
| | **Raw Avg:** | 17.59 | 2.970 | | 857.2 | 5.256 | 88.35 | 27.38 | 44.13 |
| | **Max:** | 19.83 | 10.17 | | 1140 | 19.37 | 136.5 | 42.74 | 197.0 |
| | **Min:** | 10.67 | 0.828 | | 174.6 | 3.189 | 1.803 | 0.124 | 8.885 |
| | **Cylinder Concentrations** | | | | | | | | |
| | **Zero:** | 0.000 | 0.000 | | 0.000 | 0.000 | 0.000 | 0.000 | 0.000 |
| | **Low:** | | | | | | 297.1 | 297.1 | |
| | **Mid:** | 10.04 | 9.946 | | 3997 | 15.20 | 495.7 | 495.7 | 127.6 |
| | **High:** | 23.21 | 22.54 | | 7911 | 30.29 | 874.8 | 874.8 | 279.5 |
| | **Calibration Readings** | | | | | | | | |
| | **Zero reading:** | 0.009 | 0.003 | | 1.800 | 0.128 | 0.180 | 0.030 | 0.096 |
| | **Low reading:** | | | | | | 308.5 | 307.1 | |
| | **Mid reading:** | 9.988 | 9.878 | | 4048 | 15.51 | 513.2 | 513.7 | 127.7 |
| | **High reading:** | 23.20 | 22.53 | | 7893 | 30.38 | 876.4 | 875.6 | 279.7 |
| **EPA Method 7E Error Calculations** | | | | | | | | | |
| **Zero %Err:** | **<2.0** | 0.039 | 0.013 | | 0.023 | 0.423 | N/A | N/A | 0.034 |
| **Mid %Err:** | **<2.0** | -0.224 | -0.302 | | 0.645 | 1.023 | N/A | N/A | 0.036 |
| **High %Err:** | **<2.0** | -0.043 | -0.044 | | -0.228 | 0.297 | N/A | N/A | 0.072 |
| **EPA Method 25A Error Calculations** | | | | | | | | | |
| **Zero %Err:** | **N/A** | N/A | N/A | | N/A | N/A | 0.180 | 0.030 | N/A |
| **Low %Err:** | **5% of cyl** | N/A | N/A | | N/A | N/A | 11.40 | 10.000 | N/A |
| **Mid %Err:** | **5% of cyl** | N/A | N/A | | N/A | N/A | 17.50 | 18.00 | N/A |
| **High %Err:** | **N/A** | N/A | N/A | | N/A | N/A | 1.600 | 0.800 | N/A |
| **Initial Bias Data** | | | | | | | | | |
| | **Zero reading:** | 0.141 | 0.033 | | 5.500 | 1.126 | 0.730 | 0.370 | 3.516 |
| | **Span reading:** | 22.91 | 9.801 | | 3962 | 15.20 | 513.9 | 513.8 | 127.3 |
| **Zero % bias:** | **<5.0** | 0.569 | 0.133 | | 0.047 | 3.295 | N/A | N/A | 1.224 |
| **Span % bias:** | **<5.0** | -1.250 | -0.342 | | -1.087 | -1.023 | N/A | N/A | -0.143 |
| **Final Bias Data** | | | | | | | | | |
| | **Zero reading:** | 0.013 | -0.178 | | 12.80 | 1.251 | 1.500 | 1.070 | 0.392 |
| | **Span reading:** | 23.19 | 9.719 | | 3732 | 15.80 | 507.4 | 506.5 | 128.3 |
| **Zero % bias:** | **<5.0** | 0.017 | -0.803 | | 0.139 | 3.708 | N/A | N/A | 0.106 |
| **Span % bias:** | **<5.0** | -0.043 | -0.705 | | -3.994 | 0.957 | N/A | N/A | 0.215 |
| **Zero % drift:** | **<3.0** | 0.552 | 0.936 | | 0.092 | 0.412 | N/A | N/A | 1.118 |
| **Span % drift:** | **<3.0** | 1.206 | 0.363 | | 2.907 | 1.980 | N/A | N/A | 0.358 |
| **Zero drift:** | **<3.0% span** | N/A | N/A | | N/A | N/A | -0.770 | -0.700 | N/A |
| **Span drift:** | **<3.0% span** | N/A | N/A | | N/A | N/A | 6.500 | 7.300 | N/A |
| **Bias Corrected Averages** | | | | | | | | | |
| | **Cor Avg:** | 17.69 | 3.078 | | 883.2 | 4.320 | 88.35 | 27.38 | 42.76 |

| MAQDAQ 1.0 | | | |
|---|---|---|---|
| Project Name: ODEQ ACI - Compliance Testing | Project Number: PROJ-021372 | CEMS Operator: SW | Unit/Condition: ACI |
| Run Length: 90 | Record Interval: 6 | Average Interval: 60 | Triplicate Sampling: True |
| Traverse: True | Ports: 1 | Points per port: 3 | DAQ Device: DT9806(01) |

## Run 1 Average Results - Run 3 - Part 1

## 09:25:00 - 10:55:00

| | **Name:** | O2 SN-719 | CO2 SN-719 | | CO SN-743 | SO2 SN-3 | THC SN-718 | CH4 SN-718 | NOx SN-695 |
|---|---|---|---|---|---|---|---|---|---|
| | **Make/Model:** | | | | | | | | |
| May 24 2023 | 09:26:00 | 16.15 | 4.357 | | 1318 | 3.675 | 138.9 | 62.65 | 55.48 |
| May 24 2023 | 09:27:00 | 16.59 | 4.104 | | 1954 | 4.148 | 465.9 | 60.73 | 48.43 |
| May 24 2023 | 09:28:00 | 16.02 | 4.634 | | 2722 | 5.251 | 435.8 | 154.7 | 56.36 |
| May 24 2023 | 09:29:00 | 15.71 | 5.043 | | 3094 | 6.728 | 665.3 | 163.2 | 67.90 |
| May 24 2023 | 09:30:00 | 15.07 | 5.325 | | 3721 | 8.216 | 621.1 | 180.9 | 81.34 |
| May 24 2023 | 09:31:00 | 14.94 | 5.597 | | 3354 | 8.060 | 447.1 | 115.2 | 89.56 |
| May 24 2023 | 09:32:00 | 15.00 | 5.594 | | 3281 | 10.18 | 264.3 | 128.8 | 92.96 |
| May 24 2023 | 09:33:00 | 15.12 | 5.414 | | 2929 | 9.147 | 319.0 | 101.2 | 88.24 |
| May 24 2023 | 09:34:00 | 15.10 | 5.329 | | 2682 | 8.304 | 269.8 | 108.1 | 79.06 |
| May 24 2023 | 09:35:00 | 15.39 | 5.238 | | 2364 | 7.740 | 214.6 | 100.3 | 77.16 |
| May 24 2023 | 09:36:00 | 15.23 | 5.264 | | 1959 | 7.325 | 174.7 | 56.09 | 76.39 |
| May 24 2023 | 09:37:00 | 15.87 | 4.685 | | 1801 | 6.817 | 182.0 | 57.33 | 66.95 |
| May 24 2023 | 09:38:00 | 15.82 | 4.749 | | 1618 | 6.532 | 128.9 | 61.17 | 68.73 |
| May 24 2023 | 09:39:00 | 15.52 | 4.942 | | 1368 | 6.600 | 92.21 | 53.14 | 67.20 |
| May 24 2023 | 09:40:00 | 15.75 | 4.850 | | 1690 | 7.033 | 228.2 | 46.52 | 68.19 |
| May 24 2023 | 09:41:00 | 14.23 | 6.514 | | 3349 | 9.850 | 291.4 | 97.94 | 105.0 |
| May 24 2023 | 09:42:00 | 14.12 | 6.413 | | 3032 | 11.09 | 137.7 | 44.58 | 104.5 |
| May 24 2023 | 09:43:00 | 14.61 | 5.719 | | 2913 | 10.83 | 146.1 | 72.34 | 99.2 |
| May 24 2023 | 09:44:00 | 14.81 | 5.912 | | 2422 | 10.37 | 129.8 | 69.84 | 95.32 |
| May 24 2023 | 09:45:00 | 15.11 | 5.353 | | 1938 | 9.350 | 120.3 | 43.35 | 86.08 |
| May 24 2023 | 09:46:00 | 15.45 | 4.843 | | 1868 | 8.584 | 165.1 | 56.59 | 74.04 |
| May 24 2023 | 09:47:00 | 15.84 | 4.869 | | 1547 | 7.890 | 115.2 | 57.16 | 74.26 |
| May 24 2023 | 09:48:00 | 15.66 | 4.718 | | 1367 | 7.519 | 135.6 | 33.89 | 68.21 |
| May 24 2023 | 09:49:00 | 16.26 | 4.454 | | 1380 | 6.801 | 122.3 | 45.26 | 65.21 |
| May 24 2023 | 09:50:00 | 15.77 | 4.791 | | 1325 | 6.605 | 88.45 | 43.46 | 67.53 |
| May 24 2023 | 09:51:00 | 15.51 | 5.033 | | 989.2 | 7.278 | 78.67 | 23.89 | 73.00 |
| May 24 2023 | 09:52:00 | 15.63 | 4.958 | | 1305 | 7.765 | 101.4 | 36.08 | 69.06 |
| May 24 2023 | 09:53:00 | 14.98 | 5.551 | | 1284 | 9.189 | 73.24 | 28.72 | 84.69 |
| May 24 2023 | 09:54:00 | 15.33 | 5.219 | | 1329 | 9.842 | 89.51 | 37.60 | 78.49 |
| May 24 2023 | 09:55:00 | 15.62 | 4.893 | | 1139 | 8.465 | 74.46 | 33.79 | 71.68 |
| End of port 1 point 1 | | | | | | | | | |
| May 24 2023 | 09:56:00 | 15.90 | 4.689 | | 974.0 | 7.533 | 63.60 | 28.26 | 67.07 |
| May 24 2023 | 09:57:00 | 16.17 | 4.411 | | 929.8 | 7.095 | 67.89 | 27.60 | 60.26 |
| May 24 2023 | 09:58:00 | 16.29 | 4.306 | | 929.7 | 6.648 | 70.73 | 25.05 | 55.67 |
| May 24 2023 | 09:59:00 | 16.52 | 4.098 | | 930.3 | 6.330 | 70.03 | 29.85 | 54.97 |
| May 24 2023 | 10:00:00 | 16.57 | 3.989 | | 969.9 | 5.905 | 63.40 | 32.08 | 50.22 |
| May 24 2023 | 10:01:00 | 16.79 | 3.895 | | 1150 | 5.993 | 163.3 | 38.28 | 47.13 |
| May 24 2023 | 10:02:00 | 15.66 | 4.904 | | 2339 | 8.370 | 330.6 | 105.5 | 69.23 |
| May 24 2023 | 10:03:00 | 16.31 | 4.322 | | 2444 | 8.902 | 361.1 | 123.7 | 63.40 |
| May 24 2023 | 10:04:00 | 14.58 | 6.104 | | 2612 | 12.14 | 257.7 | 95.00 | 111.0 |
| May 24 2023 | 10:05:00 | 14.28 | 6.223 | | 1971 | 14.02 | 139.3 | 32.41 | 110.7 |
| May 24 2023 | 10:06:00 | 14.78 | 5.770 | | 2059 | 12.94 | 132.3 | 56.30 | 95.36 |
| May 24 2023 | 10:07:00 | 15.39 | 5.098 | | 1778 | 11.97 | 128.8 | 59.87 | 84.26 |
| May 24 2023 | 10:08:00 | 15.62 | 4.918 | | 1524 | 11.16 | 130.0 | 55.73 | 78.16 |
| May 24 2023 | 10:09:00 | 15.41 | 5.435 | | 1527 | 11.09 | 195.6 | 60.88 | 81.47 |
| May 24 2023 | 10:10:00 | 14.89 | 5.494 | | 1828 | 12.53 | 180.4 | 38.29 | 88.93 |
| May 24 2023 | 10:11:00 | 15.07 | 5.476 | | 1410 | 11.33 | 122.6 | 39.33 | 81.80 |



| MAQDAQ 1.0 | | | |
|---|---|---|---|
| Project Name: ODEQ ACI - Compliance Testing | Project Number: PROJ-021372 | CEMS Operator: SW | Unit/Condition: ACI |
| Run Length: 90 | Record Interval: 6 | Average Interval: 60 | Triplicate Sampling: True |
| Traverse: True | Ports: 1 | Points per port: 3 | DAQ Device: DT9806(01) |

| | | | | | | | | | |
|---|---|---|---|---|---|---|---|---|---|
| May 24 2023 | 10:12:00 | 15.64 | 4.833 | | 1413 | 10.09 | 171.4 | 51.40 | 73.09 |
| May 24 2023 | 10:13:00 | 16.28 | 4.378 | | 1280 | 8.713 | 157.8 | 58.95 | 66.64 |
| May 24 2023 | 10:14:00 | 15.91 | 4.650 | | 1035 | 8.149 | 125.4 | 47.39 | 68.27 |
| May 24 2023 | 10:15:00 | 15.74 | 4.797 | | 976.8 | 7.577 | 104.9 | 37.83 | 65.23 |
| May 24 2023 | 10:16:00 | 16.26 | 4.328 | | 888.5 | 7.104 | 87.35 | 39.16 | 60.45 |
| May 24 2023 | 10:17:00 | 16.40 | 4.183 | | 809.6 | 6.815 | 75.66 | 33.07 | 56.84 |
| May 24 2023 | 10:18:00 | 16.51 | 4.011 | | 737.1 | 6.638 | 57.75 | 27.41 | 54.33 |
| May 24 2023 | 10:19:00 | 16.71 | 3.983 | | 630.7 | 6.005 | 54.00 | 19.16 | 53.00 |
| May 24 2023 | 10:20:00 | 16.49 | 4.056 | | 560.3 | 6.075 | 43.95 | 16.33 | 53.85 |
| May 24 2023 | 10:21:00 | 16.41 | 4.233 | | 675.5 | 6.867 | 52.79 | 21.85 | 59.06 |
| May 24 2023 | 10:22:00 | 16.31 | 4.270 | | 712.5 | 6.822 | 53.38 | 23.40 | 54.98 |
| May 24 2023 | 10:23:00 | 16.36 | 4.308 | | 940.5 | 7.321 | 131.2 | 28.01 | 52.70 |
| May 24 2023 | 10:24:00 | 14.25 | 6.421 | | 1309 | 11.41 | 92.13 | 31.72 | 98.09 |
| May 24 2023 | 10:25:00 | 14.58 | 5.703 | | 2072 | 12.29 | 139.3 | 27.41 | 85.53 |
| End of port 1 point 2 | | | | | | | | | |
| May 24 2023 | 10:26:00 | 14.93 | 5.834 | | 2331 | 13.00 | 157.3 | 86.95 | 96.64 |
| May 24 2023 | 10:27:00 | 14.99 | 5.464 | | 2636 | 14.21 | 257.1 | 69.16 | 91.82 |
| May 24 2023 | 10:28:00 | 13.28 | 7.817 | | 1999 | 16.88 | 96.90 | 61.05 | 154.7 |
| May 24 2023 | 10:29:00 | 12.20 | 8.026 | | 423.1 | 18.53 | 18.12 | 0.854 | 150.0 |
| May 24 2023 | 10:30:00 | 13.09 | 7.303 | | 931.4 | 15.15 | 25.18 | 11.32 | 124.2 |
| May 24 2023 | 10:31:00 | 14.11 | 6.414 | | 1329 | 13.47 | 53.73 | 12.00 | 101.5 |
| May 24 2023 | 10:32:00 | 14.01 | 6.336 | | 1250 | 12.13 | 52.72 | 15.50 | 98.56 |
| May 24 2023 | 10:33:00 | 14.82 | 5.790 | | 1187 | 10.57 | 80.47 | 23.62 | 86.71 |
| May 24 2023 | 10:34:00 | 14.82 | 5.631 | | 1136 | 9.730 | 74.69 | 24.38 | 82.87 |
| May 24 2023 | 10:35:00 | 15.34 | 5.181 | | 1192 | 9.204 | 92.89 | 29.80 | 73.34 |
| May 24 2023 | 10:36:00 | 14.72 | 5.795 | | 2129 | 12.37 | 174.9 | 61.18 | 91.51 |
| May 24 2023 | 10:37:00 | 13.98 | 6.893 | | 1478 | 14.68 | 63.82 | 25.58 | 120.1 |
| May 24 2023 | 10:38:00 | 13.11 | 7.304 | | 1162 | 16.40 | 37.83 | 8.953 | 127.1 |
| May 24 2023 | 10:39:00 | 14.31 | 6.176 | | 1319 | 15.51 | 73.66 | 22.67 | 103.7 |
| May 24 2023 | 10:40:00 | 13.38 | 7.361 | | 1171 | 16.44 | 17.85 | 10.84 | 134.3 |
| May 24 2023 | 10:41:00 | 13.87 | 6.488 | | 823.3 | 15.17 | 15.90 | 7.452 | 113.5 |
| May 24 2023 | 10:42:00 | 14.59 | 5.880 | | 948.6 | 12.24 | 44.36 | 15.02 | 94.70 |
| May 24 2023 | 10:43:00 | 14.85 | 5.709 | | 910.5 | 10.54 | 48.31 | 17.33 | 86.68 |
| May 24 2023 | 10:44:00 | 15.20 | 5.287 | | 851.9 | 9.478 | 48.54 | 15.90 | 80.83 |
| May 24 2023 | 10:45:00 | 15.01 | 5.650 | | 751.2 | 11.39 | 43.55 | 12.66 | 95.03 |
| May 24 2023 | 10:46:00 | 15.07 | 5.480 | | 620.8 | 11.90 | 33.93 | 8.450 | 89.35 |
| May 24 2023 | 10:47:00 | 14.99 | 5.500 | | 623.7 | 10.26 | 34.17 | 8.051 | 85.79 |
| May 24 2023 | 10:48:00 | 14.98 | 5.708 | | 804.5 | 10.48 | 78.19 | 13.81 | 87.20 |
| May 24 2023 | 10:49:00 | 10.99 | 9.887 | | 892.3 | 21.23 | 77.55 | 7.997 | 207.9 |
| May 24 2023 | 10:50:00 | 11.35 | 8.811 | | 216.8 | 19.95 | 6.313 | 0.248 | 162.1 |
| May 24 2023 | 10:51:00 | 12.68 | 7.587 | | 339.0 | 14.27 | 12.77 | 0.851 | 118.9 |
| May 24 2023 | 10:52:00 | 14.00 | 6.523 | | 566.9 | 10.09 | 18.89 | 7.174 | 95.28 |
| May 24 2023 | 10:53:00 | 14.67 | 5.745 | | 649.6 | 8.470 | 27.75 | 10.48 | 81.47 |
| May 24 2023 | 10:54:00 | 14.06 | 6.845 | | 814.2 | 13.43 | 28.06 | 10.20 | 116.2 |
| May 24 2023 | 10:55:00 | 10.54 | 10.19 | | 464.1 | 23.86 | 11.34 | 2.437 | 207.9 |
| End of port 1 point 3 | | | | | | | | | |

| | | | | | | | | | |
|---|---|---|---|---|---|---|---|---|---|
| | **Average:** | 15.05 | 5.514 | | 1493 | 10.16 | 135.0 | 45.42 | 86.24 |
| | **Max:** | 16.79 | 10.19 | | 3721 | 23.86 | 665.3 | 180.9 | 207.9 |
| | **Min:** | 10.54 | 3.895 | | 216.8 | 3.675 | 6.313 | 0.248 | 47.13 |

| MAQDAQ 1.0 | | | |
|---|---|---|---|
| Project Name: ODEQ ACI - Compliance Testing | Project Number: PROJ-021372 | CEMS Operator: SW | Unit/Condition: ACI |
| Run Length: 90 | Record Interval: 6 | Average Interval: 60 | Triplicate Sampling: True |
| Traverse: True | Ports: 1 | Points per port: 3 | DAQ Device: DT9806(01) |

## Stratification Results

| **Port** | **Point** | O2 SN-719 | CO2 SN-719 | | CO SN-743 | SO2 SN-3 | THC SN-718 | CH4 SN-718 | NOx SN-695 |
|---|---|---|---|---|---|---|---|---|---|
| 1 | 1 | 15.46 | 5.168 | | 2110 | 7.951 | 223.8 | 71.73 | 76.79 |
| 1 | 2 | 15.81 | 4.713 | | 1327 | 8.907 | 126.7 | 41.77 | 68.69 |
| 1 | 3 | 13.89 | 6.592 | | 1041 | 13.87 | 60.64 | 16.62 | 111.3 |
| | **Strat diff:** | 0.757 | 1.101 | | 617.3 | 3.627 | 86.75 | 28.36 | 25.71 |
| | **Strat %:** | 7.728 | 5.882 | | 41.36 | 35.41 | 7.550 | 65.38 | 30.03 |

| MAQDAQ 1.0 | | | |
|---|---|---|---|
| Project Name: ODEQ ACI - Compliance Testing | Project Number: PROJ-021372 | CEMS Operator: SW | Unit/Condition: ACI |
| Run Length: 90 | Record Interval: 6 | Average Interval: 60 | Triplicate Sampling: True |
| Traverse: True | Ports: 1 | Points per port: 3 | DAQ Device: DT9806(01) |

## Run 1 Post run bias - Run 3 - Part 1

## 09:25:00 - 10:55:00

| | | | | | | | | | |
|---|---|---|---|---|---|---|---|---|---|
| | **Name:** | O2 SN-719 | CO2 SN-719 | | CO SN-743 | SO2 SN-3 | THC SN-718 | CH4 SN-718 | NOx SN-695 |
| | **Make/Model:** | | | | | | | | |
| | **25A or 7E:** | 7E | 7E | | 7E | 7E | 25A | 25A | 7E |
| | **Run summary data** | | | | | | | | |
| | **Raw Avg:** | 15.05 | 5.514 | | 1493 | 10.16 | 135.0 | 45.42 | 86.24 |
| | **Max:** | 16.79 | 10.19 | | 3721 | 23.86 | 665.3 | 180.9 | 207.9 |
| | **Min:** | 10.54 | 3.895 | | 216.8 | 3.675 | 6.313 | 0.248 | 47.13 |
| | **Cylinder Concentrations** | | | | | | | | |
| | **Zero:** | 0.000 | 0.000 | | 0.000 | 0.000 | 0.000 | 0.000 | 0.000 |
| | **Low:** | | | | | | 297.1 | 297.1 | |
| | **Mid:** | 10.04 | 9.946 | | 3997 | 15.20 | 495.7 | 495.7 | 127.6 |
| | **High:** | 23.21 | 22.54 | | 7911 | 30.29 | 874.8 | 874.8 | 279.5 |
| | **Calibration Readings** | | | | | | | | |
| | **Zero reading:** | 0.005 | 0.003 | | 7.600 | 0.174 | 0.090 | 0.030 | 0.096 |
| | **Low reading:** | | | | | | 307.0 | 307.9 | |
| | **Mid reading:** | 10.04 | 9.918 | | 3980 | 15.49 | 510.3 | 510.9 | 128.7 |
| | **High reading:** | 23.21 | 22.54 | | 7926 | 30.33 | 874.2 | 873.3 | 279.7 |
| **EPA Method 7E Error Calculations** | | | | | | | | | |
| **Zero %Err:** | **<2.0** | 0.022 | 0.013 | | 0.096 | 0.574 | N/A | N/A | 0.034 |
| **Mid %Err:** | **<2.0** | 0.000 | -0.124 | | -0.215 | 0.957 | N/A | N/A | 0.394 |
| **High %Err:** | **<2.0** | 0.000 | 0.000 | | 0.190 | 0.132 | N/A | N/A | 0.072 |
| **EPA Method 25A Error Calculations** | | | | | | | | | |
| **Zero %Err:** | **N/A** | N/A | N/A | | N/A | N/A | 0.090 | 0.030 | N/A |
| **Low %Err:** | **5% of cyl** | N/A | N/A | | N/A | N/A | 9.900 | 10.80 | N/A |
| **Mid %Err:** | **5% of cyl** | N/A | N/A | | N/A | N/A | 14.60 | 15.20 | N/A |
| **High %Err:** | **N/A** | N/A | N/A | | N/A | N/A | -0.600 | -1.500 | N/A |
| | **Initial Bias Data** | | | | | | | | |
| | **Zero reading:** | 0.047 | 0.015 | | 7.600 | -0.491 | 0.090 | 0.030 | 0.464 |
| | **Span reading:** | 22.95 | 9.873 | | 3952 | 15.29 | 510.3 | 510.9 | 127.4 |
| **Zero % bias:** | **<5.0** | 0.181 | 0.053 | | 0.000 | -2.195 | N/A | N/A | 0.132 |
| **Span % bias:** | **<5.0** | -1.120 | -0.200 | | -0.354 | -0.660 | N/A | N/A | -0.465 |
| | **Final Bias Data** | | | | | | | | |
| | **Zero reading:** | 0.018 | 0.107 | | 8.200 | 0.409 | 0.850 | 0.550 | 2.220 |
| | **Span reading:** | 22.85 | 9.821 | | 3893 | 15.55 | 509.5 | 509.9 | 130.3 |
| **Zero % bias:** | **<5.0** | 0.056 | 0.461 | | 0.008 | 0.776 | N/A | N/A | 0.760 |
| **Span % bias:** | **<5.0** | -1.551 | -0.430 | | -1.100 | 0.198 | N/A | N/A | 0.573 |
| **Zero % drift:** | **<3.0** | 0.125 | 0.408 | | 0.008 | 2.971 | N/A | N/A | 0.628 |
| **Span % drift:** | **<3.0** | 0.431 | 0.230 | | 0.746 | 0.858 | N/A | N/A | 1.037 |
| **Zero drift:** | **<3.0% span** | N/A | N/A | | N/A | N/A | -0.760 | -0.520 | N/A |
| **Span drift:** | **<3.0% span** | N/A | N/A | | N/A | N/A | 0.800 | 1.000 | N/A |
| | **Bias Corrected Averages** | | | | | | | | |
| | **Cor Avg:** | 15.24 | 5.542 | | 1516 | 10.03 | 135.0 | 45.42 | 84.96 |

| MAQDAQ 1.0 | | | |
|---|---|---|---|
| Project Name: ODEQ ACI - Compliance Testing | Project Number: PROJ-021372 | CEMS Operator: SW | Unit/Condition: ACI |
| Run Length: 90 | Record Interval: 6 | Average Interval: 60 | Triplicate Sampling: True |
| Traverse: True | Ports: 1 | Points per port: 3 | DAQ Device: DT9806(01) |

## Run 2 Average Results - Run 3 - Part 2

## 11:12:00 - 12:42:00

| | **Name:** | O2 SN-719 | CO2 SN-719 | | CO SN-743 | SO2 SN-3 | THC SN-718 | CH4 SN-718 | NOx SN-695 |
|---|---|---|---|---|---|---|---|---|---|
| | **Make/Model:** | | | | | | | | |
| May 24 2023 | 11:13:00 | 16.68 | 3.898 | | 609.2 | 8.114 | 45.65 | 14.73 | 71.43 |
| May 24 2023 | 11:14:00 | 16.75 | 3.913 | | 633.1 | 7.922 | 46.21 | 14.02 | 66.90 |
| May 24 2023 | 11:15:00 | 16.78 | 3.800 | | 586.8 | 7.309 | 42.92 | 13.35 | 62.01 |
| May 24 2023 | 11:16:00 | 17.17 | 3.355 | | 577.7 | 6.885 | 43.82 | 14.19 | 55.19 |
| May 24 2023 | 11:17:00 | 17.38 | 3.356 | | 568.7 | 6.896 | 50.49 | 16.29 | 49.58 |
| May 24 2023 | 11:18:00 | 17.34 | 3.291 | | 607.6 | 6.691 | 53.82 | 17.13 | 47.18 |
| May 24 2023 | 11:19:00 | 17.44 | 3.214 | | 579.2 | 6.458 | 54.84 | 18.29 | 45.69 |
| May 24 2023 | 11:20:00 | 17.55 | 3.093 | | 574.0 | 6.158 | 56.96 | 17.54 | 42.81 |
| May 24 2023 | 11:21:00 | 17.46 | 3.199 | | 579.1 | 6.000 | 58.43 | 17.72 | 41.88 |
| May 24 2023 | 11:22:00 | 17.56 | 3.110 | | 559.1 | 5.799 | 53.59 | 15.97 | 40.83 |
| May 24 2023 | 11:23:00 | 17.64 | 3.046 | | 530.3 | 5.519 | 53.49 | 17.03 | 38.63 |
| May 24 2023 | 11:24:00 | 17.78 | 2.869 | | 551.9 | 5.110 | 54.54 | 17.07 | 36.29 |
| May 24 2023 | 11:25:00 | 17.71 | 3.021 | | 540.2 | 5.067 | 54.80 | 17.57 | 37.44 |
| May 24 2023 | 11:26:00 | 17.66 | 2.997 | | 574.1 | 5.098 | 51.88 | 17.35 | 36.56 |
| May 24 2023 | 11:27:00 | 17.69 | 3.035 | | 478.7 | 5.364 | 43.59 | 13.96 | 40.02 |
| May 24 2023 | 11:28:00 | 17.31 | 3.375 | | 436.1 | 6.958 | 32.86 | 9.549 | 49.34 |
| May 24 2023 | 11:29:00 | 16.41 | 4.233 | | 581.9 | 8.879 | 36.51 | 8.031 | 74.95 |
| May 24 2023 | 11:30:00 | 15.80 | 5.162 | | 782.4 | 8.991 | 45.75 | 12.31 | 89.29 |
| May 24 2023 | 11:31:00 | 13.75 | 7.190 | | 774.7 | 12.38 | 19.27 | 15.46 | 150.0 |
| May 24 2023 | 11:32:00 | 14.01 | 6.200 | | 420.3 | 12.59 | 18.49 | 3.008 | 114.5 |
| May 24 2023 | 11:33:00 | 14.55 | 5.973 | | 684.5 | 10.32 | 19.83 | 12.71 | 104.2 |
| May 24 2023 | 11:34:00 | 15.08 | 5.458 | | 688.0 | 10.40 | 20.76 | 9.248 | 96.89 |
| May 24 2023 | 11:35:00 | 15.57 | 4.925 | | 676.6 | 9.868 | 27.50 | 13.65 | 89.03 |
| May 24 2023 | 11:36:00 | 15.46 | 5.160 | | 636.8 | 9.001 | 28.67 | 9.192 | 80.11 |
| May 24 2023 | 11:37:00 | 16.10 | 4.531 | | 720.9 | 7.227 | 36.97 | 14.83 | 68.77 |
| May 24 2023 | 11:38:00 | 16.20 | 4.476 | | 652.8 | 6.417 | 33.92 | 11.34 | 63.12 |
| May 24 2023 | 11:39:00 | 16.30 | 4.308 | | 688.8 | 5.751 | 38.14 | 12.55 | 56.18 |
| May 24 2023 | 11:40:00 | 16.63 | 4.035 | | 771.5 | 5.445 | 59.30 | 19.49 | 51.94 |
| May 24 2023 | 11:41:00 | 16.62 | 4.043 | | 764.1 | 4.984 | 63.28 | 19.04 | 49.84 |
| May 24 2023 | 11:42:00 | 15.53 | 5.270 | | 742.4 | 7.216 | 52.05 | 12.15 | 86.28 |
| End of port 1 point 1 | | | | | | | | | |
| May 24 2023 | 11:43:00 | 14.00 | 6.730 | | 561.7 | 12.22 | 11.57 | 9.860 | 133.9 |
| May 24 2023 | 11:44:00 | 14.17 | 6.444 | | 553.2 | 14.24 | 28.05 | 5.129 | 120.7 |
| May 24 2023 | 11:45:00 | 13.77 | 6.895 | | 589.7 | 13.57 | 20.66 | 5.997 | 122.5 |
| May 24 2023 | 11:46:00 | 13.52 | 6.938 | | 650.2 | 14.38 | 11.30 | 7.768 | 131.1 |
| May 24 2023 | 11:47:00 | 13.57 | 7.167 | | 512.0 | 12.48 | 9.855 | 2.864 | 126.3 |
| May 24 2023 | 11:48:00 | 12.70 | 7.781 | | 365.4 | 12.91 | 5.709 | 0.619 | 129.3 |
| May 24 2023 | 11:49:00 | 13.11 | 7.521 | | 387.6 | 11.93 | 9.338 | 1.256 | 119.4 |
| May 24 2023 | 11:50:00 | 11.58 | 9.315 | | 342.0 | 14.22 | 2.853 | 1.963 | 165.1 |
| May 24 2023 | 11:51:00 | 10.73 | 9.751 | | 127.8 | 14.43 | 2.753 | 0.520 | 153.1 |
| May 24 2023 | 11:52:00 | 11.82 | 8.637 | | 232.9 | 9.358 | 4.691 | 0.668 | 116.0 |
| May 24 2023 | 11:53:00 | 12.65 | 7.679 | | 302.0 | 6.924 | 7.839 | 1.618 | 95.24 |
| May 24 2023 | 11:54:00 | 14.27 | 6.330 | | 560.1 | 5.271 | 18.19 | 7.282 | 77.46 |
| May 24 2023 | 11:55:00 | 14.59 | 5.908 | | 569.3 | 4.497 | 19.34 | 8.123 | 71.09 |
| May 24 2023 | 11:56:00 | 15.07 | 5.578 | | 696.1 | 3.920 | 42.28 | 11.64 | 65.43 |
| May 24 2023 | 11:57:00 | 15.46 | 5.106 | | 706.2 | 3.688 | 46.60 | 15.02 | 59.64 |
| May 24 2023 | 11:58:00 | 15.38 | 5.142 | | 688.1 | 3.606 | 37.36 | 15.28 | 58.24 |



| MAQDAQ 1.0 | | | |
|---|---|---|---|
| Project Name: ODEQ ACI - Compliance Testing | Project Number: PROJ-021372 | CEMS Operator: SW | Unit/Condition: ACI |
| Run Length: 90 | Record Interval: 6 | Average Interval: 60 | Triplicate Sampling: True |
| Traverse: True | Ports: 1 | Points per port: 3 | DAQ Device: DT9806(01) |

| | | | | | | | | | |
|---|---|---|---|---|---|---|---|---|---|
| May 24 2023 | 11:59:00 | 15.48 | 4.990 | | 708.5 | 3.484 | 45.88 | 13.14 | 56.72 |
| May 24 2023 | 12:00:00 | 16.04 | 4.541 | | 687.7 | 3.371 | 49.57 | 16.60 | 49.50 |
| May 24 2023 | 12:01:00 | 16.28 | 4.388 | | 676.2 | 3.210 | 45.90 | 16.27 | 48.38 |
| May 24 2023 | 12:02:00 | 16.46 | 4.084 | | 665.9 | 3.150 | 48.92 | 16.18 | 43.73 |
| May 24 2023 | 12:03:00 | 16.60 | 4.077 | | 645.4 | 3.101 | 51.87 | 16.33 | 43.20 |
| May 24 2023 | 12:04:00 | 16.62 | 3.968 | | 655.6 | 3.139 | 46.50 | 16.78 | 41.45 |
| May 24 2023 | 12:05:00 | 15.81 | 5.345 | | 656.6 | 3.718 | 36.05 | 16.94 | 76.76 |
| May 24 2023 | 12:06:00 | 11.43 | 9.711 | | 412.4 | 10.91 | 3.403 | 1.956 | 182.5 |
| May 24 2023 | 12:07:00 | 10.45 | 9.679 | | 116.3 | 16.53 | 2.401 | 0.233 | 162.8 |
| May 24 2023 | 12:08:00 | 12.55 | 7.805 | | 253.4 | 10.46 | 4.724 | 0.691 | 114.1 |
| May 24 2023 | 12:09:00 | 14.01 | 6.508 | | 453.3 | 6.546 | 8.872 | 3.572 | 85.05 |
| May 24 2023 | 12:10:00 | 14.42 | 6.124 | | 625.0 | 4.755 | 27.44 | 9.080 | 77.95 |
| May 24 2023 | 12:11:00 | 14.66 | 5.842 | | 714.8 | 3.906 | 38.22 | 11.78 | 71.34 |
| May 24 2023 | 12:12:00 | 15.38 | 5.139 | | 647.4 | 4.009 | 22.49 | 11.16 | 62.08 |
| End of port 1 point 2 | | | | | | | | | |
| May 24 2023 | 12:13:00 | 15.69 | 4.894 | | 642.8 | 3.659 | 35.10 | 12.15 | 56.34 |
| May 24 2023 | 12:14:00 | 15.89 | 4.682 | | 674.1 | 3.454 | 43.45 | 13.85 | 51.65 |
| May 24 2023 | 12:15:00 | 16.29 | 4.367 | | 695.8 | 3.168 | 54.12 | 16.14 | 47.88 |
| May 24 2023 | 12:16:00 | 16.19 | 4.320 | | 708.8 | 3.027 | 49.16 | 16.66 | 45.97 |
| May 24 2023 | 12:17:00 | 16.54 | 4.129 | | 679.0 | 3.123 | 53.25 | 16.58 | 43.64 |
| May 24 2023 | 12:18:00 | 16.70 | 3.885 | | 684.3 | 3.139 | 52.20 | 15.83 | 40.07 |
| May 24 2023 | 12:19:00 | 16.96 | 3.657 | | 697.6 | 3.182 | 62.33 | 19.86 | 36.94 |
| May 24 2023 | 12:20:00 | 17.09 | 3.548 | | 736.6 | 3.308 | 72.49 | 21.19 | 34.59 |
| May 24 2023 | 12:21:00 | 17.27 | 3.384 | | 662.6 | 3.218 | 63.92 | 20.98 | 33.46 |
| May 24 2023 | 12:22:00 | 17.51 | 3.133 | | 672.7 | 3.400 | 68.20 | 20.09 | 31.16 |
| May 24 2023 | 12:23:00 | 17.44 | 3.220 | | 678.8 | 3.392 | 69.99 | 22.22 | 30.96 |
| May 24 2023 | 12:24:00 | 17.64 | 3.045 | | 673.7 | 3.445 | 67.08 | 21.85 | 30.08 |
| May 24 2023 | 12:25:00 | 17.75 | 2.968 | | 583.6 | 3.308 | 58.94 | 18.16 | 30.11 |
| May 24 2023 | 12:26:00 | 17.55 | 3.081 | | 654.8 | 3.257 | 58.47 | 19.84 | 29.02 |
| May 24 2023 | 12:27:00 | 17.85 | 2.790 | | 576.5 | 3.286 | 51.71 | 17.55 | 26.10 |
| May 24 2023 | 12:28:00 | 18.02 | 2.666 | | 533.8 | 3.287 | 49.47 | 16.27 | 24.66 |
| May 24 2023 | 12:29:00 | 18.26 | 2.332 | | 486.1 | 3.196 | 39.47 | 14.81 | 21.31 |
| May 24 2023 | 12:30:00 | 18.55 | 2.151 | | 421.0 | 3.141 | 35.33 | 12.44 | 19.13 |
| May 24 2023 | 12:31:00 | 18.67 | 2.077 | | 428.8 | 3.233 | 38.12 | 13.98 | 18.25 |
| May 24 2023 | 12:32:00 | 18.81 | 1.910 | | 482.3 | 3.185 | 43.53 | 14.81 | 16.54 |
| May 24 2023 | 12:33:00 | 18.89 | 1.862 | | 431.0 | 3.212 | 40.55 | 16.21 | 16.48 |
| May 24 2023 | 12:34:00 | 18.84 | 1.918 | | 486.2 | 3.268 | 47.70 | 15.90 | 16.80 |
| May 24 2023 | 12:35:00 | 18.86 | 1.840 | | 551.4 | 3.123 | 47.04 | 16.71 | 15.33 |
| May 24 2023 | 12:36:00 | 18.93 | 1.815 | | 533.4 | 3.101 | 45.37 | 15.72 | 15.57 |
| May 24 2023 | 12:37:00 | 18.92 | 1.840 | | 489.0 | 3.212 | 42.38 | 15.05 | 15.80 |
| May 24 2023 | 12:38:00 | 18.85 | 1.883 | | 509.4 | 3.177 | 44.58 | 16.12 | 15.77 |
| May 24 2023 | 12:39:00 | 18.96 | 1.792 | | 498.0 | 3.028 | 42.39 | 16.57 | 14.96 |
| May 24 2023 | 12:40:00 | 19.01 | 1.715 | | 545.0 | 3.131 | 53.37 | 15.86 | 14.25 |
| May 24 2023 | 12:41:00 | 18.92 | 1.886 | | 549.1 | 3.180 | 49.57 | 16.82 | 16.06 |
| May 24 2023 | 12:42:00 | 18.80 | 1.922 | | 592.4 | 3.291 | 49.05 | 18.18 | 16.20 |
| End of port 1 point 3 | | | | | | | | | |

| | | | | | | | | | |
|---|---|---|---|---|---|---|---|---|---|
| | **Average:** | 16.16 | 4.482 | | 576.6 | 6.176 | 39.30 | 13.11 | 62.47 |
| | **Max:** | 19.01 | 9.751 | | 782.4 | 16.53 | 72.49 | 22.22 | 182.5 |
| | **Min:** | 10.45 | 1.715 | | 116.3 | 3.027 | 2.401 | 0.233 | 14.25 |

| MAQDAQ 1.0 | | | |
|---|---|---|---|
| Project Name: ODEQ ACI - Compliance Testing | Project Number: PROJ-021372 | CEMS Operator: SW | Unit/Condition: ACI |
| Run Length: 90 | Record Interval: 6 | Average Interval: 60 | Triplicate Sampling: True |
| Traverse: True | Ports: 1 | Points per port: 3 | DAQ Device: DT9806(01) |

## Stratification Results

| **Port** | **Point** | O2 SN-719 | CO2 SN-719 | | CO SN-743 | SO2 SN-3 | THC SN-718 | CH4 SN-718 | NOx SN-695 |
|---|---|---|---|---|---|---|---|---|---|
| 1 | 1 | 16.47 | 4.159 | | 619.6 | 7.415 | 41.93 | 14.64 | 64.77 |
| 1 | 2 | 14.01 | 6.522 | | 532.8 | 7.834 | 24.35 | 8.251 | 95.09 |
| 1 | 3 | 17.92 | 2.797 | | 579.1 | 3.213 | 50.37 | 16.80 | 27.12 |
| | **Strat diff:** | 1.787 | 2.029 | | 42.43 | 1.680 | 11.49 | 3.570 | 32.76 |
| | **Strat %:** | 2.087 | 7.427 | | 7.687 | 47.79 | 7.835 | 37.64 | 56.49 |

| MAQDAQ 1.0 | | | |
|---|---|---|---|
| Project Name: ODEQ ACI - Compliance Testing | Project Number: PROJ-021372 | CEMS Operator: SW | Unit/Condition: ACI |
| Run Length: 90 | Record Interval: 6 | Average Interval: 60 | Triplicate Sampling: True |
| Traverse: True | Ports: 1 | Points per port: 3 | DAQ Device: DT9806(01) |

## Run 2 Post run bias - Run 3 - Part 2

## 11:12:00 - 12:42:00

| | | | | | | | | | |
|---|---|---|---|---|---|---|---|---|---|
| | **Name:** | O2 SN-719 | CO2 SN-719 | | CO SN-743 | SO2 SN-3 | THC SN-718 | CH4 SN-718 | NOx SN-695 |
| | **Make/Model:** | | | | | | | | |
| | **25A or 7E:** | 7E | 7E | | 7E | 7E | 25A | 25A | 7E |
| | **Run summary data** | | | | | | | | |
| | **Raw Avg:** | 16.16 | 4.482 | | 576.6 | 6.176 | 39.30 | 13.11 | 62.47 |
| | **Max:** | 19.01 | 9.751 | | 782.4 | 16.53 | 72.49 | 22.22 | 182.5 |
| | **Min:** | 10.45 | 1.715 | | 116.3 | 3.027 | 2.401 | 0.233 | 14.25 |
| | **Cylinder Concentrations** | | | | | | | | |
| | **Zero:** | 0.000 | 0.000 | | 0.000 | 0.000 | 0.000 | 0.000 | 0.000 |
| | **Low:** | | | | | | 297.1 | 297.1 | |
| | **Mid:** | 10.04 | 9.946 | | 3997 | 15.20 | 495.7 | 495.7 | 127.6 |
| | **High:** | 23.21 | 22.54 | | 7911 | 30.29 | 874.8 | 874.8 | 279.5 |
| | **Calibration Readings** | | | | | | | | |
| | **Zero reading:** | 0.005 | 0.003 | | 7.600 | 0.174 | 0.090 | 0.030 | 0.096 |
| | **Low reading:** | | | | | | 307.0 | 307.9 | |
| | **Mid reading:** | 10.04 | 9.918 | | 3980 | 15.49 | 510.3 | 510.9 | 128.7 |
| | **High reading:** | 23.21 | 22.54 | | 7926 | 30.33 | 874.2 | 873.3 | 279.7 |
| **EPA Method 7E Error Calculations** | | | | | | | | | |
| **Zero %Err:** | **<2.0** | 0.022 | 0.013 | | 0.096 | 0.574 | N/A | N/A | 0.034 |
| **Mid %Err:** | **<2.0** | 0.000 | -0.124 | | -0.215 | 0.957 | N/A | N/A | 0.394 |
| **High %Err:** | **<2.0** | 0.000 | 0.000 | | 0.190 | 0.132 | N/A | N/A | 0.072 |
| **EPA Method 25A Error Calculations** | | | | | | | | | |
| **Zero %Err:** | **N/A** | N/A | N/A | | N/A | N/A | 0.090 | 0.030 | N/A |
| **Low %Err:** | **5% of cyl** | N/A | N/A | | N/A | N/A | 9.900 | 10.80 | N/A |
| **Mid %Err:** | **5% of cyl** | N/A | N/A | | N/A | N/A | 14.60 | 15.20 | N/A |
| **High %Err:** | **N/A** | N/A | N/A | | N/A | N/A | -0.600 | -1.500 | N/A |
| | **Initial Bias Data** | | | | | | | | |
| | **Zero reading:** | 0.018 | 0.107 | | 8.200 | 0.409 | 0.850 | 0.550 | 2.220 |
| | **Span reading:** | 22.85 | 9.821 | | 3893 | 15.55 | 509.5 | 509.9 | 130.3 |
| **Zero % bias:** | **<5.0** | 0.056 | 0.461 | | 0.008 | 0.776 | N/A | N/A | 0.760 |
| **Span % bias:** | **<5.0** | -1.551 | -0.430 | | -1.100 | 0.198 | N/A | N/A | 0.573 |
| | **Final Bias Data** | | | | | | | | |
| | **Zero reading:** | -0.048 | 0.159 | | 30.80 | 1.303 | 0.610 | 0.120 | 3.392 |
| | **Span reading:** | 22.79 | 9.870 | | 3941 | 14.89 | 512.9 | 511.0 | 125.7 |
| **Zero % bias:** | **<5.0** | -0.228 | 0.692 | | 0.293 | 3.727 | N/A | N/A | 1.179 |
| **Span % bias:** | **<5.0** | -1.810 | -0.213 | | -0.493 | -1.981 | N/A | N/A | -1.073 |
| **Zero % drift:** | **<3.0** | 0.284 | 0.231 | | 0.285 | 2.951 | N/A | N/A | 0.419 |
| **Span % drift:** | **<3.0** | 0.259 | 0.217 | | 0.607 | 2.179 | N/A | N/A | 1.645 |
| **Zero drift:** | **<3.0% span** | N/A | N/A | | N/A | N/A | 0.240 | 0.430 | N/A |
| **Span drift:** | **<3.0% span** | N/A | N/A | | N/A | N/A | -3.400 | -1.100 | N/A |
| | **Bias Corrected Averages** | | | | | | | | |
| | **Cor Avg:** | 16.44 | 4.454 | | 571.3 | 5.630 | 39.30 | 13.11 | 60.81 |

| MAQDAQ 1.0 | | | |
|---|---|---|---|
| Project Name: ODEQ ACI - Compliance Testing | Project Number: PROJ-021372 | CEMS Operator: SW | Unit/Condition: ACI |
| Run Length: 90 | Record Interval: 6 | Average Interval: 60 | Triplicate Sampling: True |
| Traverse: True | Ports: 1 | Points per port: 3 | DAQ Device: DT9806(01) |

## Run 3 Average Results - Run 4 - Part 1

## 14:18:00 - 15:48:00

| | **Name:** | O2 SN-719 | CO2 SN-719 | | CO SN-743 | SO2 SN-3 | THC SN-718 | CH4 SN-718 | NOx SN-695 |
|---|---|---|---|---|---|---|---|---|---|
| | **Make/Model:** | | | | | | | | |
| May 24 2023 | 14:19:00 | 15.61 | 4.780 | | 2022 | 4.864 | 225.0 | 88.60 | 75.39 |
| May 24 2023 | 14:20:00 | 16.11 | 4.640 | | 1791 | 4.874 | 142.6 | 67.16 | 75.09 |
| May 24 2023 | 14:21:00 | 15.56 | 5.150 | | 1507 | 5.631 | 147.6 | 61.50 | 82.05 |
| May 24 2023 | 14:22:00 | 15.46 | 5.097 | | 1533 | 5.973 | 106.8 | 51.27 | 88.05 |
| May 24 2023 | 14:23:00 | 15.21 | 5.354 | | 1169 | 6.379 | 61.04 | 27.87 | 89.32 |
| May 24 2023 | 14:24:00 | 15.65 | 5.303 | | 1137 | 5.963 | 69.36 | 31.44 | 86.16 |
| May 24 2023 | 14:25:00 | 13.51 | 7.334 | | 1340 | 9.644 | 91.35 | 14.22 | 145.5 |
| May 24 2023 | 14:26:00 | 11.35 | 9.383 | | 611.2 | 15.67 | 8.915 | 1.385 | 212.6 |
| May 24 2023 | 14:27:00 | 11.79 | 8.572 | | 425.3 | 17.08 | 7.916 | 1.030 | 195.1 |
| May 24 2023 | 14:28:00 | 13.30 | 7.155 | | 776.3 | 13.60 | 47.47 | 6.316 | 140.2 |
| May 24 2023 | 14:29:00 | 14.81 | 5.507 | | 1260 | 9.627 | 84.81 | 12.02 | 98.62 |
| May 24 2023 | 14:30:00 | 15.45 | 5.160 | | 1304 | 7.828 | 109.7 | 40.03 | 84.06 |
| May 24 2023 | 14:31:00 | 15.71 | 4.769 | | 1078 | 6.943 | 110.9 | 19.27 | 78.61 |
| May 24 2023 | 14:32:00 | 16.17 | 4.531 | | 913.3 | 6.475 | 71.22 | 19.43 | 72.48 |
| May 24 2023 | 14:33:00 | 16.43 | 4.087 | | 862.9 | 5.749 | 62.92 | 22.99 | 63.23 |
| May 24 2023 | 14:34:00 | 16.70 | 3.886 | | 776.8 | 4.908 | 63.16 | 26.61 | 58.72 |
| May 24 2023 | 14:35:00 | 17.03 | 3.651 | | 688.5 | 4.420 | 54.75 | 20.99 | 53.26 |
| May 24 2023 | 14:36:00 | 16.26 | 4.377 | | 759.2 | 5.408 | 47.97 | 16.36 | 67.01 |
| May 24 2023 | 14:37:00 | 16.49 | 4.151 | | 751.0 | 6.369 | 57.10 | 16.47 | 63.82 |
| May 24 2023 | 14:38:00 | 15.73 | 4.906 | | 736.9 | 6.912 | 33.48 | 19.46 | 75.94 |
| May 24 2023 | 14:39:00 | 15.49 | 5.078 | | 831.5 | 8.858 | 49.64 | 14.30 | 85.14 |
| May 24 2023 | 14:40:00 | 15.21 | 5.429 | | 885.1 | 8.651 | 41.77 | 18.54 | 83.05 |
| May 24 2023 | 14:41:00 | 15.36 | 5.192 | | 878.1 | 7.413 | 55.89 | 20.29 | 70.85 |
| May 24 2023 | 14:42:00 | 15.66 | 4.968 | | 926.4 | 6.420 | 52.60 | 19.07 | 64.05 |
| May 24 2023 | 14:43:00 | 15.93 | 4.719 | | 927.7 | 5.864 | 61.88 | 23.25 | 59.08 |
| May 24 2023 | 14:44:00 | 16.09 | 4.513 | | 904.6 | 5.125 | 74.63 | 26.06 | 55.91 |
| May 24 2023 | 14:45:00 | 16.32 | 4.250 | | 898.6 | 4.882 | 74.90 | 26.75 | 52.90 |
| May 24 2023 | 14:46:00 | 16.69 | 4.020 | | 785.9 | 4.306 | 63.86 | 21.70 | 51.46 |
| May 24 2023 | 14:47:00 | 16.48 | 4.201 | | 709.5 | 4.112 | 57.03 | 17.82 | 50.43 |
| May 24 2023 | 14:48:00 | 16.65 | 3.958 | | 690.9 | 3.722 | 53.60 | 18.59 | 47.61 |
| End of port 1 point 1 | | | | | | | | | |
| May 24 2023 | 14:49:00 | 16.80 | 3.751 | | 720.6 | 3.585 | 57.72 | 22.47 | 43.45 |
| May 24 2023 | 14:50:00 | 16.79 | 3.951 | | 637.7 | 3.674 | 55.64 | 15.54 | 48.01 |
| May 24 2023 | 14:51:00 | 16.52 | 4.194 | | 639.9 | 4.358 | 43.22 | 14.21 | 52.11 |
| May 24 2023 | 14:52:00 | 16.27 | 4.339 | | 806.6 | 4.476 | 67.23 | 21.19 | 48.11 |
| May 24 2023 | 14:53:00 | 16.64 | 4.008 | | 793.5 | 3.938 | 57.78 | 24.80 | 45.69 |
| May 24 2023 | 14:54:00 | 16.67 | 4.026 | | 768.5 | 3.657 | 54.65 | 20.82 | 45.63 |
| May 24 2023 | 14:55:00 | 16.60 | 3.986 | | 766.8 | 3.189 | 61.61 | 20.52 | 43.81 |
| May 24 2023 | 14:56:00 | 16.02 | 5.228 | | 986.9 | 4.303 | 50.38 | 30.73 | 72.80 |
| May 24 2023 | 14:57:00 | 13.01 | 7.496 | | 847.1 | 11.94 | 14.23 | 16.93 | 151.4 |
| May 24 2023 | 14:58:00 | 14.77 | 5.494 | | 874.6 | 10.22 | 39.89 | 9.588 | 95.90 |
| May 24 2023 | 14:59:00 | 15.56 | 5.080 | | 1215 | 8.519 | 106.5 | 25.77 | 78.95 |
| May 24 2023 | 15:00:00 | 13.32 | 7.693 | | 1026 | 14.37 | 19.30 | 23.27 | 158.0 |
| May 24 2023 | 15:01:00 | 13.34 | 7.044 | | 496.7 | 15.10 | 13.89 | 2.704 | 137.4 |
| May 24 2023 | 15:02:00 | 14.48 | 6.010 | | 546.8 | 11.68 | 19.95 | 7.739 | 115.8 |
| May 24 2023 | 15:03:00 | 15.13 | 5.283 | | 585.5 | 9.412 | 23.35 | 9.264 | 95.09 |
| May 24 2023 | 15:04:00 | 15.75 | 4.786 | | 1013 | 10.26 | 77.66 | 19.28 | 77.85 |



| MAQDAQ 1.0 | | | |
|---|---|---|---|
| Project Name: ODEQ ACI - Compliance Testing | Project Number: PROJ-021372 | CEMS Operator: SW | Unit/Condition: ACI |
| Run Length: 90 | Record Interval: 6 | Average Interval: 60 | Triplicate Sampling: True |
| Traverse: True | Ports: 1 | Points per port: 3 | DAQ Device: DT9806(01) |

| | | | | | | | | | |
|---|---|---|---|---|---|---|---|---|---|
| May 24 2023 | 15:05:00 | 14.35 | 6.700 | | 1302 | 14.55 | 66.96 | 26.85 | 134.9 |
| May 24 2023 | 15:06:00 | 13.34 | 7.141 | | 487.9 | 17.71 | 8.787 | 2.615 | 155.4 |
| May 24 2023 | 15:07:00 | 13.65 | 6.903 | | 546.7 | 16.39 | 11.23 | 2.053 | 136.2 |
| May 24 2023 | 15:08:00 | 11.41 | 9.426 | | 446.5 | 23.78 | 3.474 | 4.900 | 206.6 |
| May 24 2023 | 15:09:00 | 11.87 | 8.408 | | 122.1 | 22.65 | 2.405 | -0.304 | 178.1 |
| May 24 2023 | 15:10:00 | 13.71 | 6.620 | | 285.5 | 15.75 | 6.017 | 0.737 | 131.0 |
| May 24 2023 | 15:11:00 | 12.76 | 8.157 | | 468.9 | 19.27 | 5.746 | 3.754 | 174.6 |
| May 24 2023 | 15:12:00 | 14.04 | 6.191 | | 267.6 | 17.30 | 8.379 | 1.301 | 127.5 |
| May 24 2023 | 15:13:00 | 15.06 | 5.336 | | 416.8 | 11.66 | 15.85 | 4.679 | 101.2 |
| May 24 2023 | 15:14:00 | 15.15 | 5.526 | | 496.5 | 11.26 | 14.91 | 6.769 | 103.1 |
| May 24 2023 | 15:15:00 | 15.53 | 4.991 | | 517.1 | 11.52 | 17.68 | 5.694 | 92.12 |
| May 24 2023 | 15:16:00 | 16.16 | 4.437 | | 510.0 | 9.513 | 25.38 | 6.971 | 77.40 |
| May 24 2023 | 15:17:00 | 16.58 | 4.059 | | 546.7 | 7.515 | 34.87 | 9.729 | 66.42 |
| May 24 2023 | 15:18:00 | 16.76 | 3.900 | | 594.7 | 6.191 | 41.72 | 13.15 | 60.28 |
| End of port 1 point 2 | | | | | | | | | |
| May 24 2023 | 15:19:00 | 17.03 | 3.594 | | 605.0 | 5.007 | 46.21 | 14.02 | 54.49 |
| May 24 2023 | 15:20:00 | 17.14 | 3.529 | | 615.7 | 4.753 | 55.50 | 14.02 | 51.49 |
| May 24 2023 | 15:21:00 | 17.35 | 3.325 | | 623.6 | 4.716 | 57.31 | 16.88 | 48.28 |
| May 24 2023 | 15:22:00 | 17.44 | 3.228 | | 633.4 | 4.782 | 59.38 | 18.18 | 49.09 |
| May 24 2023 | 15:23:00 | 17.23 | 3.518 | | 610.5 | 6.403 | 46.51 | 15.11 | 61.86 |
| May 24 2023 | 15:24:00 | 16.98 | 3.711 | | 613.3 | 6.767 | 50.40 | 13.56 | 61.55 |
| May 24 2023 | 15:25:00 | 16.65 | 3.924 | | 625.9 | 7.499 | 46.16 | 13.66 | 69.08 |
| May 24 2023 | 15:26:00 | 17.21 | 3.487 | | 665.3 | 6.800 | 45.43 | 11.66 | 60.35 |
| May 24 2023 | 15:27:00 | 16.31 | 4.558 | | 644.5 | 6.841 | 35.92 | 11.73 | 83.97 |
| May 24 2023 | 15:28:00 | 15.69 | 4.760 | | 559.7 | 7.110 | 29.68 | 7.754 | 87.99 |
| May 24 2023 | 15:29:00 | 16.12 | 4.470 | | 600.2 | 6.512 | 31.05 | 9.145 | 79.00 |
| May 24 2023 | 15:30:00 | 16.06 | 4.529 | | 612.1 | 6.213 | 40.45 | 9.555 | 75.51 |
| May 24 2023 | 15:31:00 | 16.19 | 4.451 | | 686.9 | 5.467 | 41.38 | 12.51 | 65.52 |
| May 24 2023 | 15:32:00 | 16.33 | 4.273 | | 753.4 | 4.634 | 57.28 | 15.78 | 59.51 |
| May 24 2023 | 15:33:00 | 16.63 | 3.946 | | 852.2 | 4.195 | 64.90 | 19.07 | 53.55 |
| May 24 2023 | 15:34:00 | 17.29 | 3.180 | | 826.2 | 4.045 | 67.32 | 20.24 | 43.52 |
| May 24 2023 | 15:35:00 | 17.84 | 2.921 | | 738.3 | 3.734 | 65.09 | 15.95 | 39.71 |
| May 24 2023 | 15:36:00 | 17.65 | 3.023 | | 862.8 | 3.542 | 66.72 | 23.55 | 38.91 |
| May 24 2023 | 15:37:00 | 17.66 | 3.073 | | 813.6 | 3.648 | 51.77 | 23.15 | 41.46 |
| May 24 2023 | 15:38:00 | 17.58 | 3.029 | | 651.3 | 3.652 | 59.37 | 16.37 | 40.20 |
| May 24 2023 | 15:39:00 | 15.91 | 5.184 | | 755.5 | 5.816 | 40.75 | 14.56 | 81.92 |
| May 24 2023 | 15:40:00 | 15.09 | 5.745 | | 715.0 | 7.086 | 25.51 | 11.58 | 96.00 |
| May 24 2023 | 15:41:00 | 14.32 | 6.068 | | 527.3 | 9.370 | 20.76 | 9.277 | 113.9 |
| May 24 2023 | 15:42:00 | 15.17 | 5.624 | | 470.0 | 6.283 | 24.75 | 6.881 | 88.80 |
| May 24 2023 | 15:43:00 | 13.34 | 7.825 | | 625.3 | 8.886 | 29.32 | 6.849 | 139.1 |
| May 24 2023 | 15:44:00 | 11.73 | 8.135 | | 294.4 | 13.62 | 10.76 | 0.364 | 147.7 |
| May 24 2023 | 15:45:00 | 13.16 | 7.794 | | 542.0 | 9.667 | 16.98 | 1.563 | 139.4 |
| May 24 2023 | 15:46:00 | 11.35 | 8.871 | | 300.2 | 15.13 | 3.962 | 0.641 | 170.0 |
| May 24 2023 | 15:47:00 | 12.65 | 7.987 | | 316.2 | 11.52 | 5.528 | 0.397 | 126.1 |
| May 24 2023 | 15:48:00 | 13.03 | 7.440 | | 424.7 | 7.505 | 10.58 | 3.203 | 103.0 |
| End of port 1 point 3 | | | | | | | | | |

| | | | | | | | | | |
|---|---|---|---|---|---|---|---|---|---|
| | **Average:** | 15.40 | 5.217 | | 757.5 | 8.251 | 49.14 | 16.69 | 88.35 |
| | **Max:** | 17.84 | 9.426 | | 2022 | 23.78 | 225.0 | 88.60 | 212.6 |
| | **Min:** | 11.35 | 2.921 | | 122.1 | 3.189 | 2.405 | -0.304 | 38.91 |

| MAQDAQ 1.0 | | | |
|---|---|---|---|
| Project Name: ODEQ ACI - Compliance Testing | Project Number: PROJ-021372 | CEMS Operator: SW | Unit/Condition: ACI |
| Run Length: 90 | Record Interval: 6 | Average Interval: 60 | Triplicate Sampling: True |
| Traverse: True | Ports: 1 | Points per port: 3 | DAQ Device: DT9806(01) |

## Stratification Results

| **Port** | **Point** | O2 SN-719 | CO2 SN-719 | | CO SN-743 | SO2 SN-3 | THC SN-718 | CH4 SN-718 | NOx SN-695 |
|---|---|---|---|---|---|---|---|---|---|
| 1 | 1 | 15.54 | 5.098 | | 977.9 | 7.075 | 74.67 | 24.07 | 83.94 |
| 1 | 2 | 14.88 | 5.596 | | 676.4 | 11.08 | 35.78 | 12.70 | 100.3 |
| 1 | 3 | 15.82 | 4.937 | | 618.5 | 6.689 | 39.39 | 11.57 | 80.07 |
| | **Strat diff:** | 0.407 | 0.386 | | 220.3 | 2.799 | 24.72 | 7.957 | 12.20 |
| | **Strat %:** | 3.460 | 7.402 | | 29.08 | 33.79 | 49.50 | 49.38 | 9.118 |

| MAQDAQ 1.0 | | | |
|---|---|---|---|
| Project Name: ODEQ ACI - Compliance Testing | Project Number: PROJ-021372 | CEMS Operator: SW | Unit/Condition: ACI |
| Run Length: 90 | Record Interval: 6 | Average Interval: 60 | Triplicate Sampling: True |
| Traverse: True | Ports: 1 | Points per port: 3 | DAQ Device: DT9806(01) |

## Run 3 Post run bias - Run 4 - Part 1

## 14:18:00 - 15:48:00

| | | | | | | | | | |
|---|---|---|---|---|---|---|---|---|---|
| | **Name:** | O2 SN-719 | CO2 SN-719 | | CO SN-743 | SO2 SN-3 | THC SN-718 | CH4 SN-718 | NOx SN-695 |
| | **Make/Model:** | | | | | | | | |
| | **25A or 7E:** | 7E | 7E | | 7E | 7E | 25A | 25A | 7E |
| | **Run summary data** | | | | | | | | |
| | **Raw Avg:** | 15.40 | 5.217 | | 757.5 | 8.251 | 49.14 | 16.69 | 88.35 |
| | **Max:** | 17.84 | 9.426 | | 2022 | 23.78 | 225.0 | 88.60 | 212.6 |
| | **Min:** | 11.35 | 2.921 | | 122.1 | 3.189 | 2.405 | -0.304 | 38.91 |
| | **Cylinder Concentrations** | | | | | | | | |
| | **Zero:** | 0.000 | 0.000 | | 0.000 | 0.000 | 0.000 | 0.000 | 0.000 |
| | **Low:** | | | | | | 297.1 | 297.1 | |
| | **Mid:** | 10.04 | 9.946 | | 3997 | 15.20 | 495.7 | 495.7 | 127.6 |
| | **High:** | 23.21 | 22.54 | | 7911 | 30.29 | 874.8 | 874.8 | 279.5 |
| | **Calibration Readings** | | | | | | | | |
| | **Zero reading:** | 0.005 | 0.003 | | 7.600 | 0.269 | 0.090 | 0.030 | 0.096 |
| | **Low reading:** | | | | | | 307.0 | 307.9 | |
| | **Mid reading:** | 10.04 | 9.918 | | 3980 | 15.16 | 510.3 | 510.9 | 128.7 |
| | **High reading:** | 23.21 | 22.54 | | 7926 | 30.15 | 874.2 | 873.3 | 279.7 |
| **EPA Method 7E Error Calculations** | | | | | | | | | |
| **Zero %Err:** | **<2.0** | 0.022 | 0.013 | | 0.096 | 0.888 | N/A | N/A | 0.034 |
| **Mid %Err:** | **<2.0** | 0.000 | -0.124 | | -0.215 | -0.132 | N/A | N/A | 0.394 |
| **High %Err:** | **<2.0** | 0.000 | 0.000 | | 0.190 | -0.462 | N/A | N/A | 0.072 |
| **EPA Method 25A Error Calculations** | | | | | | | | | |
| **Zero %Err:** | **N/A** | N/A | N/A | | N/A | N/A | 0.090 | 0.030 | N/A |
| **Low %Err:** | **5% of cyl** | N/A | N/A | | N/A | N/A | 9.900 | 10.80 | N/A |
| **Mid %Err:** | **5% of cyl** | N/A | N/A | | N/A | N/A | 14.60 | 15.20 | N/A |
| **High %Err:** | **N/A** | N/A | N/A | | N/A | N/A | -0.600 | -1.500 | N/A |
| | **Initial Bias Data** | | | | | | | | |
| | **Zero reading:** | 0.047 | 0.015 | | 7.600 | 1.196 | 0.090 | 0.030 | 0.464 |
| | **Span reading:** | 22.95 | 9.873 | | 3952 | 14.60 | 510.3 | 510.9 | 127.4 |
| **Zero % bias:** | **<5.0** | 0.181 | 0.053 | | 0.000 | 3.060 | N/A | N/A | 0.132 |
| **Span % bias:** | **<5.0** | -1.120 | -0.200 | | -0.354 | -1.849 | N/A | N/A | -0.465 |
| | **Final Bias Data** | | | | | | | | |
| | **Zero reading:** | 0.119 | 0.269 | | 25.60 | 1.428 | 1.070 | 1.400 | 1.940 |
| | **Span reading:** | 22.84 | 9.862 | | 3955 | 14.26 | 512.9 | 512.8 | 127.3 |
| **Zero % bias:** | **<5.0** | 0.491 | 1.180 | | 0.228 | 3.826 | N/A | N/A | 0.660 |
| **Span % bias:** | **<5.0** | -1.594 | -0.248 | | -0.316 | -2.971 | N/A | N/A | -0.501 |
| **Zero % drift:** | **<3.0** | 0.310 | 1.127 | | 0.228 | 0.766 | N/A | N/A | 0.528 |
| **Span % drift:** | **<3.0** | 0.474 | 0.048 | | 0.038 | 1.122 | N/A | N/A | 0.036 |
| **Zero drift:** | **<3.0% span** | N/A | N/A | | N/A | N/A | -0.460 | -1.280 | N/A |
| **Span drift:** | **<3.0% span** | N/A | N/A | | N/A | N/A | 0.000 | -1.800 | N/A |
| | **Bias Corrected Averages** | | | | | | | | |
| | **Cor Avg:** | 15.58 | 5.190 | | 752.2 | 8.040 | 49.14 | 16.69 | 88.15 |

| MAQDAQ 1.0 | | | |
|---|---|---|---|
| Project Name: ODEQ ACI - Compliance Testing | Project Number: PROJ-021372 | CEMS Operator: SW | Unit/Condition: ACI |
| Run Length: 90 | Record Interval: 6 | Average Interval: 60 | Triplicate Sampling: True |
| Traverse: True | Ports: 1 | Points per port: 3 | DAQ Device: DT9806(01) |

## Run 4 Average Results - Run 4 - Part 2

## 16:02:00 - 17:32:00

| | **Name:** | O2 SN-719 | CO2 SN-719 | | CO SN-743 | SO2 SN-3 | THC SN-718 | CH4 SN-718 | NOx SN-695 |
|---|---|---|---|---|---|---|---|---|---|
| | **Make/Model:** | | | | | | | | |
| May 24 2023 | 16:03:00 | 16.41 | 4.180 | | 732.1 | 2.434 | 56.25 | 16.88 | 48.47 |
| May 24 2023 | 16:04:00 | 16.67 | 3.926 | | 740.3 | 2.211 | 54.59 | 18.56 | 47.32 |
| May 24 2023 | 16:05:00 | 17.05 | 3.602 | | 652.6 | 2.387 | 52.53 | 15.78 | 46.37 |
| May 24 2023 | 16:06:00 | 17.08 | 3.514 | | 703.3 | 2.123 | 56.08 | 15.06 | 42.35 |
| May 24 2023 | 16:07:00 | 17.06 | 3.639 | | 786.2 | 1.916 | 60.44 | 16.73 | 41.66 |
| May 24 2023 | 16:08:00 | 16.98 | 3.633 | | 795.6 | 1.833 | 65.85 | 20.59 | 39.49 |
| May 24 2023 | 16:09:00 | 17.13 | 3.440 | | 898.8 | 2.737 | 71.79 | 24.58 | 38.97 |
| May 24 2023 | 16:10:00 | 17.37 | 3.290 | | 907.4 | 2.875 | 84.47 | 27.48 | 34.63 |
| May 24 2023 | 16:11:00 | 17.44 | 3.067 | | 994.9 | 2.528 | 88.17 | 28.61 | 32.27 |
| May 24 2023 | 16:12:00 | 18.35 | 2.401 | | 798.4 | 2.265 | 80.26 | 22.15 | 24.79 |
| May 24 2023 | 16:13:00 | 17.99 | 2.721 | | 923.7 | 2.308 | 95.86 | 25.58 | 26.54 |
| May 24 2023 | 16:14:00 | 18.06 | 2.517 | | 982.6 | 2.376 | 91.81 | 28.19 | 24.58 |
| May 24 2023 | 16:15:00 | 17.75 | 3.300 | | 669.0 | 2.404 | 58.59 | 21.51 | 48.03 |
| May 24 2023 | 16:16:00 | 16.81 | 3.792 | | 797.5 | 2.936 | 72.60 | 19.35 | 57.21 |
| May 24 2023 | 16:17:00 | 16.50 | 4.250 | | 861.0 | 3.721 | 67.80 | 33.14 | 74.04 |
| May 24 2023 | 16:18:00 | 16.47 | 4.280 | | 679.8 | 4.146 | 49.85 | 20.21 | 76.88 |
| May 24 2023 | 16:19:00 | 14.71 | 6.059 | | 633.9 | 5.174 | 33.29 | 10.62 | 117.9 |
| May 24 2023 | 16:20:00 | 14.08 | 6.404 | | 624.1 | 7.424 | 31.17 | 8.832 | 132.0 |
| May 24 2023 | 16:21:00 | 15.23 | 5.299 | | 661.3 | 6.790 | 25.03 | 14.29 | 96.44 |
| May 24 2023 | 16:22:00 | 16.18 | 4.342 | | 721.6 | 4.642 | 42.82 | 15.51 | 72.75 |
| May 24 2023 | 16:23:00 | 15.90 | 4.672 | | 733.7 | 3.832 | 38.00 | 15.89 | 73.63 |
| May 24 2023 | 16:24:00 | 15.99 | 4.606 | | 681.5 | 3.254 | 35.43 | 11.30 | 65.74 |
| May 24 2023 | 16:25:00 | 16.44 | 4.191 | | 821.9 | 2.755 | 51.61 | 15.36 | 62.81 |
| May 24 2023 | 16:26:00 | 14.95 | 5.998 | | 781.4 | 5.617 | 47.09 | 10.79 | 112.7 |
| May 24 2023 | 16:27:00 | 12.18 | 8.482 | | 394.3 | 11.39 | 7.020 | 2.680 | 172.9 |
| May 24 2023 | 16:28:00 | 13.47 | 6.995 | | 372.2 | 9.398 | 11.45 | 2.678 | 118.3 |
| May 24 2023 | 16:29:00 | 14.46 | 5.720 | | 637.2 | 5.386 | 19.73 | 6.290 | 88.13 |
| May 24 2023 | 16:30:00 | 16.29 | 4.125 | | 745.3 | 3.746 | 47.94 | 15.16 | 62.50 |
| May 24 2023 | 16:31:00 | 16.72 | 3.904 | | 686.0 | 2.843 | 47.60 | 21.42 | 53.38 |
| May 24 2023 | 16:32:00 | 16.83 | 3.754 | | 747.1 | 2.292 | 62.55 | 21.63 | 48.22 |
| End of port 1 point 1 | | | | | | | | | |
| May 24 2023 | 16:33:00 | 17.65 | 2.828 | | 691.3 | 2.009 | 45.14 | 18.67 | 35.85 |
| May 24 2023 | 16:34:00 | 17.98 | 2.725 | | 605.4 | 1.870 | 69.15 | 14.84 | 32.29 |
| May 24 2023 | 16:35:00 | 17.64 | 3.148 | | 691.2 | 1.872 | 69.65 | 20.32 | 34.44 |
| May 24 2023 | 16:36:00 | 17.36 | 3.278 | | 829.5 | 1.916 | 74.61 | 25.01 | 33.94 |
| May 24 2023 | 16:37:00 | 17.79 | 2.798 | | 820.9 | 1.874 | 65.06 | 24.99 | 30.34 |
| May 24 2023 | 16:38:00 | 17.80 | 2.963 | | 856.4 | 1.862 | 79.78 | 21.02 | 30.50 |
| May 24 2023 | 16:39:00 | 17.77 | 2.871 | | 870.1 | 1.901 | 72.30 | 22.48 | 29.09 |
| May 24 2023 | 16:40:00 | 17.78 | 2.860 | | 942.4 | 1.809 | 70.20 | 25.70 | 28.35 |
| May 24 2023 | 16:41:00 | 17.85 | 2.857 | | 940.4 | 1.751 | 66.94 | 23.79 | 28.11 |
| May 24 2023 | 16:42:00 | 17.28 | 3.686 | | 857.8 | 1.831 | 55.86 | 20.63 | 56.70 |
| May 24 2023 | 16:43:00 | 16.56 | 4.090 | | 673.0 | 2.264 | 47.41 | 17.95 | 71.47 |
| May 24 2023 | 16:44:00 | 16.89 | 3.900 | | 656.2 | 2.187 | 36.43 | 18.12 | 65.18 |
| May 24 2023 | 16:45:00 | 14.92 | 5.808 | | 625.6 | 3.533 | 16.62 | 17.30 | 114.2 |
| May 24 2023 | 16:46:00 | 14.50 | 6.111 | | 462.5 | 5.838 | 10.27 | 5.090 | 118.2 |
| May 24 2023 | 16:47:00 | 14.61 | 5.949 | | 555.6 | 4.857 | 16.26 | 5.522 | 93.99 |
| May 24 2023 | 16:48:00 | 14.85 | 5.731 | | 569.9 | 4.029 | 14.73 | 7.769 | 96.12 |

| | | | | | | | | | |
|---|---|---|---|---|---|---|---|---|---|
| May 24 2023 | 16:49:00 | 15.14 | 5.181 | | 475.3 | 5.031 | 14.90 | 6.178 | 86.32 |
| May 24 2023 | 16:50:00 | 15.81 | 5.002 | | 523.5 | 4.922 | 27.09 | 7.598 | 79.03 |
| May 24 2023 | 16:51:00 | 15.67 | 5.039 | | 566.2 | 4.395 | 30.75 | 9.713 | 78.86 |
| May 24 2023 | 16:52:00 | 15.16 | 5.594 | | 614.4 | 3.926 | 26.28 | 12.13 | 88.95 |
| May 24 2023 | 16:53:00 | 14.24 | 6.435 | | 478.5 | 4.422 | 12.10 | 4.344 | 103.0 |
| May 24 2023 | 16:54:00 | 13.54 | 7.094 | | 346.9 | 5.144 | 6.520 | 2.877 | 111.0 |
| May 24 2023 | 16:55:00 | 13.38 | 7.046 | | 341.1 | 5.774 | 13.41 | 1.262 | 103.4 |
| May 24 2023 | 16:56:00 | 13.72 | 6.985 | | 493.3 | 4.199 | 20.51 | 6.496 | 94.34 |
| May 24 2023 | 16:57:00 | 13.73 | 6.649 | | 573.9 | 2.909 | 21.75 | 9.777 | 86.19 |
| May 24 2023 | 16:58:00 | 14.24 | 6.201 | | 686.5 | 2.079 | 45.20 | 15.71 | 80.18 |
| May 24 2023 | 16:59:00 | 14.49 | 6.034 | | 772.1 | 1.636 | 56.73 | 15.93 | 75.26 |
| May 24 2023 | 17:00:00 | 14.79 | 5.710 | | 893.7 | 1.584 | 72.93 | 22.99 | 67.84 |
| May 24 2023 | 17:01:00 | 15.54 | 4.859 | | 839.1 | 1.483 | 64.04 | 22.75 | 56.65 |
| May 24 2023 | 17:02:00 | 15.93 | 4.830 | | 861.2 | 1.587 | 103.0 | 19.42 | 54.49 |
| End of port 1 point 2 | | | | | | | | | |
| May 24 2023 | 17:03:00 | 15.63 | 5.022 | | 1050 | 1.379 | 87.76 | 25.98 | 55.21 |
| May 24 2023 | 17:04:00 | 16.29 | 4.305 | | 956.9 | 1.500 | 81.53 | 28.36 | 46.60 |
| May 24 2023 | 17:05:00 | 16.59 | 4.022 | | 955.0 | 1.512 | 83.97 | 25.73 | 41.86 |
| May 24 2023 | 17:06:00 | 16.60 | 4.032 | | 1070 | 1.684 | 106.7 | 32.91 | 40.50 |
| May 24 2023 | 17:07:00 | 16.59 | 4.015 | | 1165 | 1.806 | 107.4 | 30.48 | 40.41 |
| May 24 2023 | 17:08:00 | 16.74 | 4.011 | | 959.3 | 1.796 | 82.81 | 26.71 | 51.42 |
| May 24 2023 | 17:09:00 | 13.50 | 7.605 | | 618.4 | 2.224 | 30.02 | 8.921 | 140.7 |
| May 24 2023 | 17:10:00 | 12.62 | 7.393 | | 421.7 | 2.511 | 9.059 | 2.461 | 146.0 |
| May 24 2023 | 17:11:00 | 14.17 | 6.635 | | 402.1 | 2.675 | 16.51 | 4.411 | 103.7 |
| May 24 2023 | 17:12:00 | 13.61 | 7.234 | | 499.6 | 2.614 | 3.830 | 5.150 | 112.4 |
| May 24 2023 | 17:13:00 | 12.40 | 8.109 | | 256.0 | 2.841 | 2.204 | 1.184 | 119.5 |
| May 24 2023 | 17:14:00 | 13.32 | 7.064 | | 264.2 | 2.692 | 6.412 | 1.884 | 92.54 |
| May 24 2023 | 17:15:00 | 14.85 | 5.501 | | 514.1 | 2.382 | 20.64 | 6.535 | 70.73 |
| May 24 2023 | 17:16:00 | 14.82 | 5.769 | | 627.5 | 1.747 | 30.54 | 10.72 | 70.58 |
| May 24 2023 | 17:17:00 | 16.67 | 3.962 | | 626.4 | 1.466 | 34.44 | 13.73 | 48.03 |
| May 24 2023 | 17:18:00 | 16.33 | 4.269 | | 728.1 | 1.403 | 42.87 | 21.16 | 49.19 |
| May 24 2023 | 17:19:00 | 15.90 | 4.769 | | 862.8 | 1.355 | 58.75 | 20.71 | 52.03 |
| May 24 2023 | 17:20:00 | 15.81 | 5.322 | | 908.3 | 1.313 | 47.38 | 23.05 | 74.70 |
| May 24 2023 | 17:21:00 | 11.27 | 9.362 | | 577.5 | 2.493 | 10.49 | 14.85 | 190.8 |
| May 24 2023 | 17:22:00 | 11.51 | 8.904 | | 253.1 | 4.228 | 3.704 | 0.542 | 158.7 |
| May 24 2023 | 17:23:00 | 11.82 | 8.807 | | 280.0 | 4.625 | 3.051 | 0.458 | 153.1 |
| May 24 2023 | 17:24:00 | 14.35 | 5.860 | | 469.4 | 3.817 | 18.65 | 3.359 | 90.80 |
| May 24 2023 | 17:25:00 | 14.39 | 6.324 | | 736.3 | 2.250 | 27.23 | 11.04 | 88.32 |
| May 24 2023 | 17:26:00 | 13.73 | 6.917 | | 520.0 | 2.137 | 21.35 | 6.125 | 99.1 |
| May 24 2023 | 17:27:00 | 13.41 | 7.154 | | 579.0 | 2.755 | 12.00 | 7.677 | 111.7 |
| May 24 2023 | 17:28:00 | 12.24 | 8.485 | | 417.9 | 4.324 | 4.389 | 3.476 | 140.5 |
| May 24 2023 | 17:29:00 | 12.01 | 8.831 | | 355.2 | 5.478 | 2.900 | 1.369 | 149.3 |
| May 24 2023 | 17:30:00 | 11.29 | 9.087 | | 272.7 | 7.348 | 1.660 | 0.709 | 155.6 |
| May 24 2023 | 17:31:00 | 11.77 | 8.730 | | 291.0 | 6.774 | 3.047 | 1.502 | 143.0 |
| May 24 2023 | 17:32:00 | 11.63 | 8.167 | | 277.9 | 5.050 | 3.614 | 0.321 | 118.5 |
| End of port 1 point 3 | | | | | | | | | |

| | | | | | | | | | |
|---|---|---|---|---|---|---|---|---|---|
| | **Average:** | 15.39 | 5.223 | | 668.8 | 3.249 | 43.31 | 14.61 | 77.79 |
| | **Max:** | 18.35 | 9.362 | | 1165 | 11.39 | 107.4 | 33.14 | 190.8 |
| | **Min:** | 11.27 | 2.401 | | 253.1 | 1.313 | 1.660 | 0.321 | 24.58 |

| MAQDAQ 1.0 | | | |
|---|---|---|---|
| Project Name: ODEQ ACI - Compliance Testing | Project Number: PROJ-021372 | CEMS Operator: SW | Unit/Condition: ACI |
| Run Length: 90 | Record Interval: 6 | Average Interval: 60 | Triplicate Sampling: True |
| Traverse: True | Ports: 1 | Points per port: 3 | DAQ Device: DT9806(01) |

## Stratification Results

| **Port** | **Point** | O2 SN-719 | CO2 SN-719 | | CO SN-743 | SO2 SN-3 | THC SN-718 | CH4 SN-718 | NOx SN-695 |
|---|---|---|---|---|---|---|---|---|---|
| 1 | 1 | 16.28 | 4.248 | | 742.2 | 3.888 | 51.63 | 18.36 | 65.26 |
| 1 | 2 | 15.80 | 4.822 | | 674.9 | 2.983 | 42.14 | 14.58 | 68.55 |
| 1 | 3 | 13.86 | 6.512 | | 580.4 | 2.906 | 30.62 | 10.81 | 98.01 |
| | **Strat diff:** | 0.967 | 1.318 | | 76.37 | 0.629 | 10.17 | 3.777 | 20.74 |
| | **Strat %:** | 9.491 | 7.162 | | 12.83 | 8.469 | 26.15 | 25.90 | 26.84 |

| MAQDAQ 1.0 | | | |
|---|---|---|---|
| Project Name: ODEQ ACI - Compliance Testing | Project Number: PROJ-021372 | CEMS Operator: SW | Unit/Condition: ACI |
| Run Length: 90 | Record Interval: 6 | Average Interval: 60 | Triplicate Sampling: True |
| Traverse: True | Ports: 1 | Points per port: 3 | DAQ Device: DT9806(01) |

## Run 4 Post run bias - Run 4 - Part 2

## 16:02:00 - 17:32:00

| | Name: | O2 SN-719 | CO2 SN-719 | | CO SN-743 | SO2 SN-3 | THC SN-718 | CH4 SN-718 | NOx SN-695 |
|---|---|---|---|---|---|---|---|---|---|
| | Make/Model: | | | | | | | | |
| | 25A or 7E: | 7E | 7E | | 7E | 7E | 25A | 25A | 7E |
| **Run summary data** | | | | | | | | | |
| | Raw Avg: | 15.39 | 5.223 | | 668.8 | 3.249 | 43.31 | 14.61 | 77.79 |
| | Max: | 18.35 | 9.362 | | 1165 | 11.39 | 107.4 | 33.14 | 190.8 |
| | Min: | 11.27 | 2.401 | | 253.1 | 1.313 | 1.660 | 0.321 | 24.58 |
| **Cylinder Concentrations** | | | | | | | | | |
| | Zero: | 0.000 | 0.000 | | 0.000 | 0.000 | 0.000 | 0.000 | 0.000 |
| | Low: | | | | | | 297.1 | 297.1 | |
| | Mid: | 10.04 | 9.946 | | 3997 | 15.20 | 495.7 | 495.7 | 127.6 |
| | High: | 23.21 | 22.54 | | 7911 | 30.29 | 874.8 | 874.8 | 279.5 |
| **Calibration Readings** | | | | | | | | | |
| | Zero reading: | 0.005 | 0.003 | | 7.600 | 0.269 | 0.090 | 0.030 | 0.096 |
| | Low reading: | | | | | | 307.0 | 307.9 | |
| | Mid reading: | 10.04 | 9.918 | | 3980 | 15.16 | 510.3 | 510.9 | 128.7 |
| | High reading: | 23.21 | 22.54 | | 7926 | 30.15 | 874.2 | 873.3 | 279.7 |
| **EPA Method 7E Error Calculations** | | | | | | | | | |
| Zero %Err: | <2.0 | 0.022 | 0.013 | | 0.096 | 0.888 | N/A | N/A | 0.034 |
| Mid %Err: | <2.0 | 0.000 | -0.124 | | -0.215 | -0.132 | N/A | N/A | 0.394 |
| High %Err: | <2.0 | 0.000 | 0.000 | | 0.190 | -0.462 | N/A | N/A | 0.072 |
| **EPA Method 25A Error Calculations** | | | | | | | | | |
| Zero %Err: | N/A | N/A | N/A | | N/A | N/A | 0.090 | 0.030 | N/A |
| Low %Err: | 5% of cyl | N/A | N/A | | N/A | N/A | 9.900 | 10.80 | N/A |
| Mid %Err: | 5% of cyl | N/A | N/A | | N/A | N/A | 14.60 | 15.20 | N/A |
| High %Err: | N/A | N/A | N/A | | N/A | N/A | -0.600 | -1.500 | N/A |
| **Initial Bias Data** | | | | | | | | | |
| | Zero reading: | 0.119 | 0.269 | | 25.60 | 1.428 | 1.070 | 1.400 | 1.940 |
| | Span reading: | 22.84 | 9.862 | | 3955 | 14.26 | 512.9 | 512.8 | 127.3 |
| Zero % bias: | <5.0 | 0.491 | 1.180 | | 0.228 | 3.826 | N/A | N/A | 0.660 |
| Span % bias: | <5.0 | -1.594 | -0.248 | | -0.316 | -2.971 | N/A | N/A | -0.501 |
| **Final Bias Data** | | | | | | | | | |
| | Zero reading: | 0.122 | 0.221 | | 19.80 | 0.644 | 0.120 | 0.240 | 0.868 |
| | Span reading: | 22.83 | 9.834 | | 3958 | 13.92 | 513.9 | 513.6 | 127.1 |
| Zero % bias: | <5.0 | 0.504 | 0.967 | | 0.154 | 1.238 | N/A | N/A | 0.276 |
| Span % bias: | <5.0 | -1.637 | -0.373 | | -0.278 | -4.094 | N/A | N/A | -0.573 |
| Zero % drift: | <3.0 | 0.013 | 0.213 | | 0.074 | 2.588 | N/A | N/A | 0.384 |
| Span % drift: | <3.0 | 0.043 | 0.125 | | 0.038 | 1.123 | N/A | N/A | 0.071 |
| Zero drift: | <3.0% span | N/A | N/A | | N/A | N/A | 0.950 | 1.160 | N/A |
| Span drift: | <3.0% span | N/A | N/A | | N/A | N/A | -1.000 | -0.800 | N/A |
| **Bias Corrected Averages** | | | | | | | | | |
| | Cor Avg: | 15.60 | 5.156 | | 656.5 | 2.577 | 43.31 | 14.61 | 77.48 |

| MAQDAQ 1.0 | | | |
|---|---|---|---|
| Project Name: ODEQ ACI - Compliance Testing | Project Number: PROJ-021372 | CEMS Operator: SW | Unit/Condition: ACI |
| Run Length: 90 | Record Interval: 6 | Average Interval: 60 | Triplicate Sampling: True |
| Traverse: True | Ports: 1 | Points per port: 3 | DAQ Device: DT9806(01) |

## Run 1 Average Results - Run 5 - Part 1

## 08:52:00 - 10:22:00

| | **Name:** | O2 SN-719 | CO2 SN-719 | | CO SN-743 | SO2 SN-3 | THC SN-718 | CH4 SN-718 | NOx SN-695 |
|---|---|---|---|---|---|---|---|---|---|
| | **Make/Model:** | | | | | | | | |
| May 25 2023 | 08:53:00 | 15.53 | 5.092 | | 2696 | 4.980 | 368.0 | 109.4 | 69.69 |
| May 25 2023 | 08:54:00 | 15.24 | 5.286 | | 2491 | 5.179 | 342.0 | 106.9 | 75.40 |
| May 25 2023 | 08:55:00 | 15.68 | 4.889 | | 2233 | 4.889 | 268.6 | 94.64 | 70.52 |
| May 25 2023 | 08:56:00 | 15.33 | 5.320 | | 2008 | 4.779 | 257.8 | 73.14 | 73.73 |
| May 25 2023 | 08:57:00 | 14.79 | 6.053 | | 2960 | 5.822 | 472.2 | 92.65 | 89.37 |
| May 25 2023 | 08:58:00 | 13.04 | 7.333 | | 2981 | 8.628 | 220.0 | 39.43 | 127.7 |
| May 25 2023 | 08:59:00 | 13.58 | 7.065 | | 3657 | 8.414 | 388.0 | 56.94 | 116.3 |
| May 25 2023 | 09:00:00 | 11.93 | 8.683 | | 2993 | 9.347 | 73.97 | 77.45 | 162.6 |
| May 25 2023 | 09:01:00 | 11.76 | 8.695 | | 1447 | 9.912 | 30.88 | 56.37 | 185.0 |
| May 25 2023 | 09:02:00 | 12.60 | 7.798 | | 1307 | 9.730 | 23.66 | 11.11 | 145.6 |
| May 25 2023 | 09:03:00 | 13.02 | 7.565 | | 1498 | 8.591 | 74.70 | 19.61 | 132.0 |
| May 25 2023 | 09:04:00 | 13.24 | 7.203 | | 1995 | 8.100 | 42.35 | 34.93 | 115.9 |
| May 25 2023 | 09:05:00 | 13.79 | 6.622 | | 2165 | 7.467 | 81.31 | 42.42 | 100.7 |
| May 25 2023 | 09:06:00 | 14.18 | 6.455 | | 1991 | 6.761 | 95.06 | 42.93 | 99.9 |
| May 25 2023 | 09:07:00 | 14.27 | 6.072 | | 1559 | 6.479 | 67.25 | 50.84 | 88.60 |
| May 25 2023 | 09:08:00 | 14.82 | 5.687 | | 1615 | 5.644 | 118.3 | 65.41 | 81.47 |
| May 25 2023 | 09:09:00 | 15.36 | 5.026 | | 1389 | 5.286 | 121.9 | 52.49 | 72.46 |
| May 25 2023 | 09:10:00 | 15.63 | 4.862 | | 1305 | 4.635 | 119.8 | 55.21 | 69.26 |
| May 25 2023 | 09:11:00 | 15.89 | 4.725 | | 1204 | 4.451 | 119.2 | 47.71 | 67.77 |
| May 25 2023 | 09:12:00 | 15.16 | 5.460 | | 1459 | 5.721 | 124.3 | 48.44 | 83.64 |
| May 25 2023 | 09:13:00 | 14.67 | 5.841 | | 2053 | 6.940 | 162.6 | 65.67 | 94.23 |
| May 25 2023 | 09:14:00 | 14.64 | 5.823 | | 2439 | 7.734 | 217.3 | 63.81 | 87.18 |
| May 25 2023 | 09:15:00 | 13.55 | 7.216 | | 2950 | 9.653 | 362.2 | 49.86 | 123.7 |
| May 25 2023 | 09:16:00 | 13.18 | 7.259 | | 1958 | 10.77 | 59.68 | 17.48 | 134.3 |
| May 25 2023 | 09:17:00 | 13.60 | 6.745 | | 2464 | 9.997 | 103.4 | 43.89 | 111.7 |
| May 25 2023 | 09:18:00 | 13.97 | 6.554 | | 2678 | 9.676 | 162.1 | 61.63 | 108.6 |
| May 25 2023 | 09:19:00 | 13.24 | 7.452 | | 2755 | 10.53 | 83.19 | 42.61 | 130.9 |
| May 25 2023 | 09:20:00 | 12.96 | 7.358 | | 2140 | 12.05 | 89.98 | 13.85 | 129.4 |
| May 25 2023 | 09:21:00 | 13.83 | 6.537 | | 2219 | 10.77 | 91.87 | 11.05 | 108.0 |
| May 25 2023 | 09:22:00 | 14.85 | 5.834 | | 1888 | 8.695 | 138.8 | 45.99 | 95.06 |
| End of port 1 point 1 | | | | | | | | | |
| May 25 2023 | 09:23:00 | 14.26 | 6.188 | | 1827 | 8.217 | 146.4 | 43.66 | 89.35 |
| May 25 2023 | 09:24:00 | 14.72 | 5.785 | | 1922 | 7.295 | 116.7 | 61.61 | 79.48 |
| May 25 2023 | 09:25:00 | 15.14 | 5.324 | | 1808 | 6.650 | 162.5 | 56.48 | 71.30 |
| May 25 2023 | 09:26:00 | 15.23 | 5.205 | | 1652 | 6.151 | 140.3 | 49.71 | 69.27 |
| May 25 2023 | 09:27:00 | 15.66 | 4.966 | | 1456 | 5.600 | 143.0 | 49.57 | 67.47 |
| May 25 2023 | 09:28:00 | 15.71 | 4.816 | | 1455 | 5.216 | 129.8 | 49.82 | 63.23 |
| May 25 2023 | 09:29:00 | 15.84 | 4.591 | | 1391 | 5.263 | 119.2 | 55.13 | 59.80 |
| May 25 2023 | 09:30:00 | 16.20 | 4.317 | | 1185 | 4.887 | 95.71 | 46.90 | 57.59 |
| May 25 2023 | 09:31:00 | 16.16 | 4.376 | | 1120 | 4.599 | 101.0 | 37.37 | 54.56 |
| May 25 2023 | 09:32:00 | 16.28 | 4.379 | | 1123 | 4.784 | 85.63 | 39.55 | 62.40 |
| May 25 2023 | 09:33:00 | 15.48 | 5.202 | | 1027 | 7.378 | 85.94 | 26.46 | 84.56 |
| May 25 2023 | 09:34:00 | 14.40 | 6.507 | | 1780 | 10.99 | 139.5 | 47.74 | 110.8 |
| May 25 2023 | 09:35:00 | 13.60 | 6.801 | | 1835 | 13.89 | 44.72 | 38.54 | 124.5 |
| May 25 2023 | 09:36:00 | 13.66 | 6.697 | | 2175 | 14.28 | 88.84 | 31.92 | 113.9 |
| May 25 2023 | 09:37:00 | 13.51 | 6.965 | | 2701 | 14.51 | 152.0 | 34.82 | 130.2 |
| May 25 2023 | 09:38:00 | 13.68 | 6.999 | | 1825 | 14.85 | 121.9 | 36.34 | 128.2 |



| MAQDAQ 1.0 | | | |
|---|---|---|---|
| Project Name: ODEQ ACI - Compliance Testing | Project Number: PROJ-021372 | CEMS Operator: SW | Unit/Condition: ACI |
| Run Length: 90 | Record Interval: 6 | Average Interval: 60 | Triplicate Sampling: True |
| Traverse: True | Ports: 1 | Points per port: 3 | DAQ Device: DT9806(01) |

| | | | | | | | | | |
|---|---|---|---|---|---|---|---|---|---|
| May 25 2023 | 09:39:00 | 14.04 | 6.391 | | 1872 | 13.27 | 46.51 | 25.98 | 107.3 |
| May 25 2023 | 09:40:00 | 14.69 | 5.800 | | 1825 | 11.92 | 87.31 | 57.31 | 89.57 |
| May 25 2023 | 09:41:00 | 15.35 | 5.209 | | 2623 | 10.96 | 333.9 | 142.2 | 74.28 |
| May 25 2023 | 09:42:00 | 14.38 | 6.359 | | 2978 | 12.46 | 188.5 | 140.9 | 103.6 |
| May 25 2023 | 09:43:00 | 13.97 | 6.575 | | 2384 | 13.82 | 79.50 | 54.28 | 115.5 |
| May 25 2023 | 09:44:00 | 12.08 | 8.840 | | 1708 | 19.42 | 69.15 | 27.87 | 190.6 |
| May 25 2023 | 09:45:00 | 12.50 | 7.610 | | 752.9 | 21.11 | 29.00 | 1.246 | 147.0 |
| May 25 2023 | 09:46:00 | 13.85 | 6.536 | | 1761 | 16.50 | 70.15 | 28.20 | 111.1 |
| May 25 2023 | 09:47:00 | 14.56 | 5.820 | | 2292 | 14.51 | 140.7 | 46.09 | 91.03 |
| May 25 2023 | 09:48:00 | 15.08 | 5.279 | | 1979 | 12.68 | 121.0 | 78.54 | 80.79 |
| May 25 2023 | 09:49:00 | 15.25 | 5.208 | | 1962 | 11.73 | 168.2 | 80.67 | 77.27 |
| May 25 2023 | 09:50:00 | 15.60 | 4.955 | | 1687 | 11.28 | 137.9 | 60.69 | 75.01 |
| May 25 2023 | 09:51:00 | 14.17 | 6.359 | | 2201 | 16.12 | 102.2 | 41.84 | 110.7 |
| May 25 2023 | 09:52:00 | 14.13 | 6.557 | | 2623 | 17.69 | 121.5 | 82.68 | 116.8 |
| End of port 1 point 2 | | | | | | | | | |
| May 25 2023 | 09:53:00 | 12.86 | 7.982 | | 1878 | 21.34 | 82.59 | 14.77 | 162.7 |
| May 25 2023 | 09:54:00 | 11.79 | 8.634 | | 662.5 | 25.61 | 14.32 | 3.975 | 192.5 |
| May 25 2023 | 09:55:00 | 12.42 | 8.393 | | 818.9 | 27.67 | 14.70 | 0.664 | 191.2 |
| May 25 2023 | 09:56:00 | 11.39 | 9.306 | | 370.4 | 30.46 | 8.786 | 0.187 | 207.2 |
| May 25 2023 | 09:57:00 | 12.03 | 8.306 | | 310.9 | 26.51 | 6.534 | 1.602 | 177.2 |
| May 25 2023 | 09:58:00 | 13.36 | 7.023 | | 596.3 | 20.07 | 20.34 | 3.800 | 128.9 |
| May 25 2023 | 09:59:00 | 14.67 | 5.938 | | 1004 | 15.40 | 55.88 | 17.52 | 101.6 |
| May 25 2023 | 10:00:00 | 14.92 | 5.357 | | 1074 | 13.19 | 57.98 | 21.35 | 88.20 |
| May 25 2023 | 10:01:00 | 15.62 | 4.810 | | 924.1 | 11.17 | 66.64 | 23.03 | 79.59 |
| May 25 2023 | 10:02:00 | 15.72 | 4.714 | | 927.7 | 10.43 | 62.97 | 29.54 | 73.12 |
| May 25 2023 | 10:03:00 | 16.13 | 4.480 | | 941.4 | 10.01 | 77.93 | 32.44 | 72.67 |
| May 25 2023 | 10:04:00 | 15.78 | 4.871 | | 872.3 | 11.88 | 59.35 | 19.80 | 77.21 |
| May 25 2023 | 10:05:00 | 15.79 | 4.751 | | 879.1 | 11.47 | 52.96 | 23.94 | 76.34 |
| May 25 2023 | 10:06:00 | 15.98 | 4.548 | | 745.7 | 10.07 | 51.85 | 19.63 | 69.95 |
| May 25 2023 | 10:07:00 | 16.28 | 4.260 | | 665.9 | 9.009 | 40.42 | 22.09 | 62.83 |
| May 25 2023 | 10:08:00 | 14.20 | 6.793 | | 1176 | 15.55 | 62.08 | 58.19 | 119.5 |
| May 25 2023 | 10:09:00 | 12.30 | 8.935 | | 1260 | 23.10 | 26.00 | 13.68 | 178.2 |
| May 25 2023 | 10:10:00 | 10.61 | 9.283 | | 388.2 | 29.64 | 4.977 | 3.506 | 176.8 |
| May 25 2023 | 10:11:00 | 11.97 | 8.787 | | 629.6 | 26.36 | 6.269 | 4.473 | 182.8 |
| May 25 2023 | 10:12:00 | 11.71 | 8.663 | | 453.1 | 23.23 | 19.03 | 0.672 | 163.0 |
| May 25 2023 | 10:13:00 | 11.03 | 9.469 | | 244.5 | 21.52 | 3.148 | -0.152 | 173.3 |
| May 25 2023 | 10:14:00 | 12.20 | 8.222 | | 424.8 | 18.26 | 7.161 | -0.036 | 131.4 |
| May 25 2023 | 10:15:00 | 11.80 | 8.853 | | 606.3 | 16.91 | 9.176 | 2.243 | 146.7 |
| May 25 2023 | 10:16:00 | 13.08 | 7.348 | | 499.5 | 15.81 | 14.18 | 2.909 | 113.3 |
| May 25 2023 | 10:17:00 | 13.76 | 6.422 | | 937.8 | 12.37 | 31.22 | 12.10 | 91.62 |
| May 25 2023 | 10:18:00 | 14.28 | 6.132 | | 1020 | 10.26 | 38.34 | 24.77 | 83.10 |
| May 25 2023 | 10:19:00 | 13.69 | 7.137 | | 1007 | 10.56 | 34.25 | 18.07 | 111.3 |
| May 25 2023 | 10:20:00 | 11.03 | 9.420 | | 409.6 | 18.11 | 5.085 | 4.209 | 178.0 |
| May 25 2023 | 10:21:00 | 11.29 | 9.615 | | 331.7 | 20.40 | 3.355 | 5.593 | 178.4 |
| May 25 2023 | 10:22:00 | 10.91 | 9.281 | | 241.9 | 20.47 | 3.261 | 0.850 | 164.1 |
| End of port 1 point 3 | | | | | | | | | |

| | | | | | | | | | |
|---|---|---|---|---|---|---|---|---|---|
| | **Average:** | 14.01 | 6.521 | | 1575 | 12.29 | 104.3 | 39.48 | 110.7 |
| | **Max:** | 16.28 | 9.615 | | 3657 | 30.46 | 472.2 | 142.2 | 207.2 |
| | **Min:** | 10.61 | 4.260 | | 241.9 | 4.451 | 3.148 | -0.152 | 54.56 |

| MAQDAQ 1.0 | | | |
|---|---|---|---|
| Project Name: ODEQ ACI - Compliance Testing | Project Number: PROJ-021372 | CEMS Operator: SW | Unit/Condition: ACI |
| Run Length: 90 | Record Interval: 6 | Average Interval: 60 | Triplicate Sampling: True |
| Traverse: True | Ports: 1 | Points per port: 3 | DAQ Device: DT9806(01) |

## Stratification Results

| **Port** | **Point** | O2 SN-719 | CO2 SN-719 | | CO SN-743 | SO2 SN-3 | THC SN-718 | CH4 SN-718 | NOx SN-695 |
|---|---|---|---|---|---|---|---|---|---|
| 1 | 1 | 14.07 | 6.438 | | 2135 | 7.784 | 176.4 | 54.27 | 104.4 |
| 1 | 2 | 14.68 | 5.699 | | 1796 | 11.47 | 124.8 | 47.88 | 91.53 |
| 1 | 3 | 13.25 | 7.269 | | 696.0 | 17.90 | 30.73 | 12.07 | 128.9 |
| | **Strat diff:** | 0.680 | 0.800 | | 592.7 | 5.515 | 65.76 | 16.20 | 20.62 |
| | **Strat %:** | 5.357 | 12.37 | | 54.87 | 7.385 | 72.23 | 68.30 | 3.580 |

| MAQDAQ 1.0 | | | |
|---|---|---|---|
| Project Name: ODEQ ACI - Compliance Testing | Project Number: PROJ-021372 | CEMS Operator: SW | Unit/Condition: ACI |
| Run Length: 90 | Record Interval: 6 | Average Interval: 60 | Triplicate Sampling: True |
| Traverse: True | Ports: 1 | Points per port: 3 | DAQ Device: DT9806(01) |

## Run 1 Post run bias - Run 5 - Part 1

## 08:52:00 - 10:22:00

| | | | | | | | | | |
|---|---|---|---|---|---|---|---|---|---|
| | **Name:** | O2 SN-719 | CO2 SN-719 | | CO SN-743 | SO2 SN-3 | THC SN-718 | CH4 SN-718 | NOx SN-695 |
| | **Make/Model:** | | | | | | | | |
| | **25A or 7E:** | 7E | 7E | | 7E | 7E | 25A | 25A | 7E |
| | **Run summary data** | | | | | | | | |
| | **Raw Avg:** | 14.01 | 6.521 | | 1575 | 12.29 | 104.3 | 39.48 | 110.7 |
| | **Max:** | 16.28 | 9.615 | | 3657 | 30.46 | 472.2 | 142.2 | 207.2 |
| | **Min:** | 10.61 | 4.260 | | 241.9 | 4.451 | 3.148 | -0.152 | 54.56 |
| | **Cylinder Concentrations** | | | | | | | | |
| | **Zero:** | 0.000 | 0.000 | | 0.000 | 0.000 | 0.000 | 0.000 | 0.000 |
| | **Low:** | | | | | | 297.1 | 297.1 | |
| | **Mid:** | 10.04 | 9.946 | | 3997 | 15.20 | 495.7 | 495.7 | 127.6 |
| | **High:** | 23.21 | 22.54 | | 7911 | 30.29 | 874.8 | 874.8 | 279.5 |
| | **Calibration Readings** | | | | | | | | |
| | **Zero reading:** | 0.032 | -0.105 | | -5.500 | 0.107 | 0.370 | 0.180 | 0.196 |
| | **Low reading:** | | | | | | 306.9 | 307.9 | |
| | **Mid reading:** | 9.998 | 9.863 | | 3989 | 15.28 | 511.1 | 511.3 | 129.7 |
| | **High reading:** | 23.21 | 22.61 | | 7870 | 30.34 | 873.8 | 874.6 | 282.1 |
| **Zero %Err:** | **<2.0** | 0.138 | -0.466 | | -0.070 | 0.353 | N/A | N/A | 0.070 |
| **Mid %Err:** | **<2.0** | -0.181 | -0.368 | | -0.101 | 0.264 | N/A | N/A | 0.751 |
| **High %Err:** | **<2.0** | 0.000 | 0.311 | | -0.518 | 0.165 | N/A | N/A | 0.930 |
| **Zero %Err:** | **N/A** | N/A | N/A | | N/A | N/A | 0.370 | 0.180 | N/A |
| **Low %Err:** | **5% of cyl** | N/A | N/A | | N/A | N/A | 9.800 | 10.80 | N/A |
| **Mid %Err:** | **5% of cyl** | N/A | N/A | | N/A | N/A | 15.40 | 15.60 | N/A |
| **High %Err:** | **N/A** | N/A | N/A | | N/A | N/A | -1.000 | -0.200 | N/A |
| | **Initial Bias Data** | | | | | | | | |
| | **Zero reading:** | 0.018 | -0.013 | | 7.000 | 0.308 | 0.370 | 0.180 | 2.416 |
| | **Span reading:** | 22.93 | 9.959 | | 4001 | 29.37 | 511.1 | 511.3 | 127.0 |
| **Zero % bias:** | **<5.0** | -0.060 | 0.408 | | 0.158 | 0.664 | N/A | N/A | 0.794 |
| **Span % bias:** | **<5.0** | -1.206 | 0.426 | | 0.152 | -3.202 | N/A | N/A | -0.966 |
| | **Final Bias Data** | | | | | | | | |
| | **Zero reading:** | 0.007 | 0.143 | | 24.40 | 0.955 | 0.490 | 0.490 | 2.880 |
| | **Span reading:** | 22.88 | 9.769 | | 4014 | 29.61 | 512.0 | 512.7 | 130.5 |
| **Zero % bias:** | **<5.0** | -0.108 | 1.100 | | 0.378 | 2.800 | N/A | N/A | 0.960 |
| **Span % bias:** | **<5.0** | -1.422 | -0.417 | | 0.316 | -2.410 | N/A | N/A | 0.286 |
| **Zero % drift:** | **<3.0** | 0.048 | 0.692 | | 0.220 | 2.136 | N/A | N/A | 0.166 |
| **Span % drift:** | **<3.0** | 0.216 | 0.843 | | 0.164 | 0.792 | N/A | N/A | 1.252 |
| **Zero drift:** | **<3.0% span** | N/A | N/A | | N/A | N/A | -0.120 | -0.310 | N/A |
| **Span drift:** | **<3.0% span** | N/A | N/A | | N/A | N/A | -0.900 | -1.400 | N/A |
| | **Bias Corrected Averages** | | | | | | | | |
| | **Cor Avg:** | 14.19 | 6.553 | | 1561 | 12.24 | 104.3 | 39.48 | 109.3 |

| MAQDAQ 1.0 | | | |
|---|---|---|---|
| Project Name: ODEQ ACI - Compliance Testing | Project Number: PROJ-021372 | CEMS Operator: SW | Unit/Condition: ACI |
| Run Length: 90 | Record Interval: 6 | Average Interval: 60 | Triplicate Sampling: True |
| Traverse: True | Ports: 1 | Points per port: 3 | DAQ Device: DT9806(01) |

## Run 2 Average Results - Run 5 - Part 2

## 10:38:00 - 12:08:00

| | **Name:** | O2 SN-719 | CO2 SN-719 | | CO SN-743 | SO2 SN-3 | THC SN-718 | CH4 SN-718 | NOx SN-695 |
|---|---|---|---|---|---|---|---|---|---|
| | **Make/Model:** | | | | | | | | |
| May 25 2023 | 10:39:00 | 12.68 | 7.579 | | 407.6 | 7.680 | 3.775 | 2.131 | 102.1 |
| May 25 2023 | 10:40:00 | 13.66 | 6.833 | | 549.5 | 5.804 | 24.79 | 6.260 | 88.52 |
| May 25 2023 | 10:41:00 | 14.09 | 6.337 | | 742.1 | 4.367 | 34.14 | 13.18 | 77.52 |
| May 25 2023 | 10:42:00 | 14.64 | 5.838 | | 866.1 | 3.738 | 50.52 | 20.36 | 73.46 |
| May 25 2023 | 10:43:00 | 14.61 | 5.901 | | 873.8 | 3.464 | 47.05 | 20.65 | 71.91 |
| May 25 2023 | 10:44:00 | 15.20 | 5.308 | | 885.4 | 3.073 | 51.08 | 24.34 | 63.68 |
| May 25 2023 | 10:45:00 | 15.52 | 5.072 | | 832.7 | 3.158 | 48.85 | 19.37 | 59.88 |
| May 25 2023 | 10:46:00 | 15.46 | 5.155 | | 806.0 | 3.580 | 37.13 | 19.68 | 68.46 |
| May 25 2023 | 10:47:00 | 15.09 | 5.629 | | 682.7 | 5.341 | 27.17 | 10.26 | 78.47 |
| May 25 2023 | 10:48:00 | 14.89 | 5.679 | | 617.1 | 6.374 | 30.14 | 8.695 | 78.10 |
| May 25 2023 | 10:49:00 | 15.03 | 5.578 | | 693.4 | 5.561 | 37.23 | 12.30 | 74.19 |
| May 25 2023 | 10:50:00 | 14.30 | 6.172 | | 709.9 | 6.581 | 23.97 | 10.11 | 84.05 |
| May 25 2023 | 10:51:00 | 14.92 | 5.586 | | 767.3 | 4.960 | 41.94 | 11.87 | 68.72 |
| May 25 2023 | 10:52:00 | 15.81 | 4.688 | | 805.2 | 3.802 | 58.01 | 17.11 | 58.04 |
| May 25 2023 | 10:53:00 | 15.93 | 4.617 | | 849.3 | 3.324 | 58.93 | 23.46 | 55.22 |
| May 25 2023 | 10:54:00 | 15.62 | 5.168 | | 640.2 | 4.471 | 28.78 | 14.06 | 72.33 |
| May 25 2023 | 10:55:00 | 14.73 | 5.952 | | 936.6 | 9.087 | 47.68 | 21.57 | 94.89 |
| May 25 2023 | 10:56:00 | 14.64 | 5.960 | | 882.9 | 10.55 | 39.48 | 15.99 | 101.4 |
| May 25 2023 | 10:57:00 | 13.16 | 7.495 | | 808.8 | 13.85 | 20.18 | 9.407 | 128.5 |
| May 25 2023 | 10:58:00 | 12.40 | 8.566 | | 745.2 | 15.83 | 11.69 | 15.41 | 164.0 |
| May 25 2023 | 10:59:00 | 12.68 | 7.641 | | 335.9 | 15.08 | 5.424 | 0.640 | 125.9 |
| May 25 2023 | 11:00:00 | 14.09 | 6.310 | | 643.7 | 9.706 | 25.53 | 8.869 | 90.26 |
| May 25 2023 | 11:01:00 | 14.63 | 5.847 | | 822.5 | 7.354 | 46.97 | 13.76 | 82.94 |
| May 25 2023 | 11:02:00 | 14.01 | 6.548 | | 697.9 | 8.669 | 17.23 | 9.270 | 97.64 |
| May 25 2023 | 11:03:00 | 14.55 | 5.974 | | 649.5 | 8.442 | 24.97 | 7.684 | 83.69 |
| May 25 2023 | 11:04:00 | 14.94 | 5.722 | | 714.4 | 8.312 | 29.05 | 10.43 | 82.57 |
| May 25 2023 | 11:05:00 | 14.23 | 6.564 | | 652.8 | 9.837 | 21.40 | 11.77 | 104.4 |
| May 25 2023 | 11:06:00 | 12.05 | 8.526 | | 361.7 | 13.65 | 3.918 | 2.497 | 137.5 |
| May 25 2023 | 11:07:00 | 12.94 | 7.292 | | 319.4 | 10.90 | 4.920 | 1.281 | 98.39 |
| May 25 2023 | 11:08:00 | 14.01 | 6.485 | | 462.5 | 7.381 | 14.25 | 4.056 | 80.45 |
| End of port 1 point 1 | | | | | | | | | |
| May 25 2023 | 11:09:00 | 14.56 | 5.904 | | 482.4 | 5.475 | 21.39 | 6.271 | 71.23 |
| May 25 2023 | 11:10:00 | 14.75 | 5.788 | | 560.6 | 4.488 | 26.94 | 11.78 | 67.33 |
| May 25 2023 | 11:11:00 | 15.52 | 5.058 | | 554.8 | 3.522 | 31.02 | 10.31 | 58.92 |
| May 25 2023 | 11:12:00 | 15.31 | 5.306 | | 483.7 | 3.096 | 27.49 | 9.325 | 58.66 |
| May 25 2023 | 11:13:00 | 15.32 | 5.159 | | 473.8 | 2.614 | 33.30 | 10.38 | 54.38 |
| May 25 2023 | 11:14:00 | 15.82 | 4.754 | | 575.4 | 2.341 | 39.45 | 13.48 | 50.46 |
| May 25 2023 | 11:15:00 | 15.83 | 4.776 | | 585.5 | 2.273 | 45.36 | 15.00 | 49.19 |
| May 25 2023 | 11:16:00 | 16.15 | 4.456 | | 638.2 | 2.322 | 49.64 | 17.61 | 45.90 |
| May 25 2023 | 11:17:00 | 16.17 | 4.408 | | 593.8 | 2.337 | 48.00 | 15.72 | 44.34 |
| May 25 2023 | 11:18:00 | 16.34 | 4.277 | | 627.0 | 2.320 | 53.27 | 14.26 | 42.99 |
| May 25 2023 | 11:19:00 | 16.42 | 4.167 | | 654.5 | 2.273 | 56.46 | 17.14 | 40.74 |
| May 25 2023 | 11:20:00 | 16.58 | 4.040 | | 675.2 | 2.294 | 46.69 | 17.61 | 39.74 |
| May 25 2023 | 11:21:00 | 16.81 | 3.805 | | 703.1 | 2.164 | 50.48 | 19.56 | 36.87 |
| May 25 2023 | 11:22:00 | 16.89 | 3.684 | | 620.2 | 2.291 | 47.15 | 16.50 | 35.43 |
| May 25 2023 | 11:23:00 | 17.07 | 3.756 | | 639.9 | 2.249 | 48.94 | 14.33 | 36.01 |
| May 25 2023 | 11:24:00 | 15.39 | 5.476 | | 1086 | 3.626 | 75.40 | 48.59 | 88.17 |



| MAQDAQ 1.0 | | | |
|---|---|---|---|
| Project Name: ODEQ ACI - Compliance Testing | Project Number: PROJ-021372 | CEMS Operator: SW | Unit/Condition: ACI |
| Run Length: 90 | Record Interval: 6 | Average Interval: 60 | Triplicate Sampling: True |
| Traverse: True | Ports: 1 | Points per port: 3 | DAQ Device: DT9806(01) |

| | | | | | | | | | |
|---|---|---|---|---|---|---|---|---|---|
| May 25 2023 | 11:25:00 | 13.36 | 7.717 | | 1065 | 10.28 | 43.81 | 11.37 | 154.0 |
| May 25 2023 | 11:26:00 | 13.10 | 7.178 | | 380.4 | 13.81 | 12.96 | 1.484 | 138.1 |
| May 25 2023 | 11:27:00 | 15.09 | 5.317 | | 524.5 | 10.27 | 39.98 | 5.133 | 90.06 |
| May 25 2023 | 11:28:00 | 13.68 | 6.954 | | 656.7 | 14.29 | 11.99 | 11.57 | 142.8 |
| May 25 2023 | 11:29:00 | 14.72 | 5.841 | | 476.8 | 11.93 | 21.80 | 6.260 | 104.1 |
| May 25 2023 | 11:30:00 | 14.99 | 5.560 | | 608.6 | 9.139 | 30.13 | 8.182 | 101.1 |
| May 25 2023 | 11:31:00 | 15.33 | 5.102 | | 470.7 | 8.329 | 19.34 | 5.703 | 86.70 |
| May 25 2023 | 11:32:00 | 15.29 | 6.083 | | 564.8 | 8.729 | 31.10 | 9.373 | 108.9 |
| May 25 2023 | 11:33:00 | 12.48 | 8.249 | | 410.2 | 16.74 | 6.322 | 3.315 | 153.6 |
| May 25 2023 | 11:34:00 | 10.61 | 10.50 | | 300.9 | 21.96 | 2.244 | 2.635 | 204.0 |
| May 25 2023 | 11:35:00 | 10.45 | 9.798 | | 87.36 | 22.81 | 0.995 | 0.180 | 177.7 |
| May 25 2023 | 11:36:00 | 11.95 | 8.345 | | 165.7 | 13.95 | 1.718 | 0.482 | 128.0 |
| May 25 2023 | 11:37:00 | 13.73 | 6.660 | | 319.4 | 8.615 | 10.79 | 1.306 | 91.11 |
| May 25 2023 | 11:38:00 | 14.74 | 5.724 | | 479.4 | 5.341 | 27.39 | 6.769 | 74.19 |
| End of port 1 point 2 | | | | | | | | | |
| May 25 2023 | 11:39:00 | 15.31 | 5.231 | | 592.4 | 4.268 | 26.32 | 10.28 | 66.53 |
| May 25 2023 | 11:40:00 | 15.95 | 4.728 | | 559.9 | 2.852 | 27.56 | 11.96 | 58.61 |
| May 25 2023 | 11:41:00 | 16.47 | 4.205 | | 519.3 | 2.239 | 26.87 | 10.06 | 50.12 |
| May 25 2023 | 11:42:00 | 16.53 | 4.131 | | 501.3 | 1.995 | 36.48 | 11.03 | 47.09 |
| May 25 2023 | 11:43:00 | 16.72 | 3.941 | | 540.6 | 1.907 | 32.14 | 11.07 | 43.65 |
| May 25 2023 | 11:44:00 | 16.93 | 3.803 | | 541.7 | 1.892 | 30.29 | 13.67 | 40.84 |
| May 25 2023 | 11:45:00 | 17.15 | 3.474 | | 572.8 | 1.742 | 32.97 | 14.62 | 37.41 |
| May 25 2023 | 11:46:00 | 17.46 | 3.298 | | 523.9 | 1.748 | 30.72 | 13.14 | 34.82 |
| May 25 2023 | 11:47:00 | 17.54 | 3.202 | | 537.6 | 1.708 | 35.19 | 11.62 | 33.33 |
| May 25 2023 | 11:48:00 | 17.61 | 3.163 | | 524.9 | 1.775 | 35.59 | 10.97 | 34.05 |
| May 25 2023 | 11:49:00 | 17.43 | 3.272 | | 558.5 | 1.736 | 31.67 | 12.71 | 34.61 |
| May 25 2023 | 11:50:00 | 17.61 | 3.045 | | 449.5 | 1.700 | 31.22 | 11.22 | 30.94 |
| May 25 2023 | 11:51:00 | 17.73 | 2.953 | | 623.8 | 1.711 | 44.71 | 15.39 | 29.50 |
| May 25 2023 | 11:52:00 | 17.88 | 2.783 | | 648.8 | 1.801 | 44.22 | 14.60 | 28.26 |
| May 25 2023 | 11:53:00 | 17.96 | 2.690 | | 571.5 | 1.725 | 37.68 | 14.17 | 27.26 |
| May 25 2023 | 11:54:00 | 18.05 | 2.639 | | 537.8 | 1.685 | 42.86 | 12.67 | 25.58 |
| May 25 2023 | 11:55:00 | 18.29 | 2.388 | | 606.6 | 1.716 | 44.57 | 13.18 | 23.67 |
| May 25 2023 | 11:56:00 | 18.28 | 2.397 | | 610.5 | 1.740 | 38.22 | 15.99 | 23.86 |
| May 25 2023 | 11:57:00 | 18.24 | 2.471 | | 575.8 | 1.818 | 42.62 | 13.57 | 23.51 |
| May 25 2023 | 11:58:00 | 18.42 | 2.295 | | 600.7 | 1.706 | 46.75 | 14.58 | 22.03 |
| May 25 2023 | 11:59:00 | 18.44 | 2.234 | | 585.0 | 1.751 | 43.66 | 13.86 | 21.76 |
| May 25 2023 | 12:00:00 | 18.49 | 2.180 | | 610.0 | 1.668 | 42.77 | 14.48 | 20.96 |
| May 25 2023 | 12:01:00 | 18.47 | 2.222 | | 602.1 | 1.677 | 39.35 | 14.43 | 21.07 |
| May 25 2023 | 12:02:00 | 18.51 | 2.151 | | 601.3 | 1.696 | 39.49 | 14.45 | 20.17 |
| May 25 2023 | 12:03:00 | 18.50 | 2.182 | | 572.3 | 1.584 | 38.66 | 13.40 | 20.41 |
| May 25 2023 | 12:04:00 | 18.58 | 2.108 | | 548.5 | 1.662 | 33.92 | 13.79 | 19.32 |
| May 25 2023 | 12:05:00 | 18.51 | 2.214 | | 583.9 | 1.671 | 41.08 | 12.79 | 20.62 |
| May 25 2023 | 12:06:00 | 18.46 | 2.145 | | 637.2 | 1.574 | 40.80 | 15.19 | 20.28 |
| May 25 2023 | 12:07:00 | 18.54 | 2.171 | | 619.4 | 1.623 | 39.83 | 12.59 | 19.57 |
| May 25 2023 | 12:08:00 | 18.49 | 2.197 | | 686.3 | 1.812 | 43.06 | 15.31 | 19.80 |
| End of port 1 point 3 | | | | | | | | | |

| | | | | | | | | | |
|---|---|---|---|---|---|---|---|---|---|
| | **Average:** | 15.64 | 4.975 | | 605.2 | 5.578 | 33.32 | 12.17 | 68.24 |
| | **Max:** | 18.58 | 10.50 | | 1086 | 22.81 | 75.40 | 48.59 | 204.0 |
| | **Min:** | 10.45 | 2.108 | | 87.36 | 1.574 | 0.995 | 0.180 | 19.32 |

| MAQDAQ 1.0 | | | |
|---|---|---|---|
| Project Name: ODEQ ACI - Compliance Testing | Project Number: PROJ-021372 | CEMS Operator: SW | Unit/Condition: ACI |
| Run Length: 90 | Record Interval: 6 | Average Interval: 60 | Triplicate Sampling: True |
| Traverse: True | Ports: 1 | Points per port: 3 | DAQ Device: DT9806(01) |

## Stratification Results

| **Port** | **Point** | O2 SN-719 | CO2 SN-719 | | CO SN-743 | SO2 SN-3 | THC SN-718 | CH4 SN-718 | NOx SN-695 |
|---|---|---|---|---|---|---|---|---|---|
| 1 | 1 | 14.41 | 6.219 | | 698.0 | 7.409 | 31.33 | 12.11 | 87.85 |
| 1 | 2 | 14.78 | 5.808 | | 544.6 | 7.263 | 32.36 | 9.796 | 84.88 |
| 1 | 3 | 17.82 | 2.904 | | 577.6 | 1.840 | 37.73 | 13.23 | 29.89 |
| | **Strat diff:** | 2.150 | 1.242 | | 91.27 | 1.905 | 3.923 | 1.518 | 20.31 |
| | **Strat %:** | 8.041 | 41.65 | | 4.802 | 66.57 | 7.326 | 3.398 | 55.74 |

| MAQDAQ 1.0 | | | |
|---|---|---|---|
| Project Name: ODEQ ACI - Compliance Testing | Project Number: PROJ-021372 | CEMS Operator: SW | Unit/Condition: ACI |
| Run Length: 90 | Record Interval: 6 | Average Interval: 60 | Triplicate Sampling: True |
| Traverse: True | Ports: 1 | Points per port: 3 | DAQ Device: DT9806(01) |

## Run 2 Post run bias - Run 5 - Part 2

## 10:38:00 - 12:08:00

| | Name: | O2 SN-719 | CO2 SN-719 | | CO SN-743 | SO2 SN-3 | THC SN-718 | CH4 SN-718 | NOx SN-695 |
|---|---|---|---|---|---|---|---|---|---|
| | **Make/Model:** | | | | | | | | |
| | **25A or 7E:** | 7E | 7E | | 7E | 7E | 25A | 25A | 7E |
| **Run summary data** | | | | | | | | | |
| | **Raw Avg:** | 15.64 | 4.975 | | 605.2 | 5.578 | 33.32 | 12.17 | 68.24 |
| | **Max:** | 18.58 | 10.50 | | 1086 | 22.81 | 75.40 | 48.59 | 204.0 |
| | **Min:** | 10.45 | 2.108 | | 87.36 | 1.574 | 0.995 | 0.180 | 19.32 |
| **Cylinder Concentrations** | | | | | | | | | |
| | **Zero:** | 0.000 | 0.000 | | 0.000 | 0.000 | 0.000 | 0.000 | 0.000 |
| | **Low:** | | | | | | 297.1 | 297.1 | |
| | **Mid:** | 10.04 | 9.946 | | 3997 | 15.20 | 495.7 | 495.7 | 127.6 |
| | **High:** | 23.21 | 22.54 | | 7911 | 30.29 | 874.8 | 874.8 | 279.5 |
| **Calibration Readings** | | | | | | | | | |
| | **Zero reading:** | 0.032 | -0.105 | | -5.500 | 0.107 | 0.370 | 0.180 | 0.196 |
| | **Low reading:** | | | | | | 306.9 | 307.9 | |
| | **Mid reading:** | 9.998 | 9.863 | | 3989 | 15.28 | 511.1 | 511.3 | 129.7 |
| | **High reading:** | 23.21 | 22.61 | | 7870 | 30.34 | 873.8 | 874.6 | 282.1 |
| **EPA Method 7E Error Calculations** | | | | | | | | | |
| **Zero %Err:** | **<2.0** | 0.138 | -0.466 | | -0.070 | 0.353 | N/A | N/A | 0.070 |
| **Mid %Err:** | **<2.0** | -0.181 | -0.368 | | -0.101 | 0.264 | N/A | N/A | 0.751 |
| **High %Err:** | **<2.0** | 0.000 | 0.311 | | -0.518 | 0.165 | N/A | N/A | 0.930 |
| **EPA Method 25A Error Calculations** | | | | | | | | | |
| **Zero %Err:** | **N/A** | N/A | N/A | | N/A | N/A | 0.370 | 0.180 | N/A |
| **Low %Err:** | **5% of cyl** | N/A | N/A | | N/A | N/A | 9.800 | 10.80 | N/A |
| **Mid %Err:** | **5% of cyl** | N/A | N/A | | N/A | N/A | 15.40 | 15.60 | N/A |
| **High %Err:** | **N/A** | N/A | N/A | | N/A | N/A | -1.000 | -0.200 | N/A |
| **Initial Bias Data** | | | | | | | | | |
| | **Zero reading:** | 0.007 | 0.143 | | 24.40 | 0.955 | 0.490 | 0.490 | 2.880 |
| | **Span reading:** | 22.88 | 9.769 | | 4014 | 29.61 | 512.0 | 512.7 | 130.5 |
| **Zero % bias:** | **<5.0** | -0.108 | 1.100 | | 0.378 | 2.800 | N/A | N/A | 0.960 |
| **Span % bias:** | **<5.0** | -1.422 | -0.417 | | 0.316 | -2.410 | N/A | N/A | 0.286 |
| **Final Bias Data** | | | | | | | | | |
| | **Zero reading:** | 0.009 | 0.113 | | 11.90 | 1.404 | 0.850 | 0.920 | 1.332 |
| | **Span reading:** | 22.88 | 9.793 | | 3915 | 29.14 | 513.8 | 513.6 | 133.5 |
| **Zero % bias:** | **<5.0** | -0.099 | 0.967 | | 0.220 | 4.282 | N/A | N/A | 0.406 |
| **Span % bias:** | **<5.0** | -1.422 | -0.311 | | -0.935 | -3.962 | N/A | N/A | 1.360 |
| **Zero % drift:** | **<3.0** | 0.009 | 0.133 | | 0.158 | 1.482 | N/A | N/A | 0.554 |
| **Span % drift:** | **<3.0** | 0.000 | 0.106 | | 1.251 | 1.552 | N/A | N/A | 1.074 |
| **Zero drift:** | **<3.0% span** | N/A | N/A | | N/A | N/A | -0.360 | -0.430 | N/A |
| **Span drift:** | **<3.0% span** | N/A | N/A | | N/A | N/A | -1.800 | -0.900 | N/A |
| **Bias Corrected Averages** | | | | | | | | | |
| | **Cor Avg:** | 15.86 | 4.994 | | 594.6 | 4.725 | 33.32 | 12.17 | 64.97 |

| MAQDAQ 1.0 | | | |
|---|---|---|---|
| Project Name: ODEQ ACI - Compliance Testing | Project Number: PROJ-021372 | CEMS Operator: SW | Unit/Condition: ACI |
| Run Length: 90 | Record Interval: 6 | Average Interval: 60 | Triplicate Sampling: True |
| Traverse: True | Ports: 1 | Points per port: 3 | DAQ Device: DT9806(01) |

## Run 3 Average Results - Run 6 - Part 1

## 13:05:00 - 14:35:00

| | **Name:** | O2 SN-719 | CO2 SN-719 | | CO SN-743 | SO2 SN-3 | THC SN-718 | CH4 SN-718 | NOx SN-695 |
|---|---|---|---|---|---|---|---|---|---|
| | **Make/Model:** | | | | | | | | |
| May 25 2023 | 13:06:00 | 14.34 | 6.015 | | 598.8 | 12.66 | 31.06 | 8.237 | 115.0 |
| May 25 2023 | 13:07:00 | 15.26 | 5.321 | | 705.2 | 10.75 | 31.80 | 9.341 | 99.1 |
| May 25 2023 | 13:08:00 | 15.62 | 4.897 | | 708.7 | 10.27 | 51.70 | 12.39 | 87.80 |
| May 25 2023 | 13:09:00 | 14.93 | 6.099 | | 914.1 | 11.90 | 35.98 | 26.99 | 111.4 |
| May 25 2023 | 13:10:00 | 14.23 | 6.282 | | 1302 | 15.65 | 63.96 | 19.90 | 119.0 |
| May 25 2023 | 13:11:00 | 14.11 | 6.170 | | 1672 | 15.77 | 33.31 | 22.87 | 120.9 |
| May 25 2023 | 13:12:00 | 15.24 | 5.242 | | 1422 | 11.89 | 79.65 | 28.83 | 93.21 |
| May 25 2023 | 13:13:00 | 15.60 | 4.891 | | 998.8 | 9.181 | 50.37 | 30.45 | 89.05 |
| May 25 2023 | 13:14:00 | 16.19 | 4.477 | | 853.2 | 7.967 | 69.31 | 27.72 | 76.41 |
| May 25 2023 | 13:15:00 | 15.25 | 5.318 | | 1521 | 13.90 | 122.6 | 43.98 | 98.66 |
| May 25 2023 | 13:16:00 | 15.51 | 4.963 | | 1293 | 13.30 | 109.7 | 39.19 | 93.94 |
| May 25 2023 | 13:17:00 | 15.89 | 4.571 | | 1339 | 12.16 | 102.8 | 45.47 | 86.88 |
| May 25 2023 | 13:18:00 | 16.49 | 4.053 | | 972.9 | 8.928 | 75.97 | 31.53 | 75.31 |
| May 25 2023 | 13:19:00 | 16.78 | 3.769 | | 805.4 | 6.936 | 58.13 | 29.76 | 66.40 |
| May 25 2023 | 13:20:00 | 17.17 | 3.420 | | 734.0 | 5.797 | 64.12 | 25.27 | 56.64 |
| May 25 2023 | 13:21:00 | 17.38 | 3.557 | | 669.1 | 5.491 | 61.87 | 22.09 | 58.84 |
| May 25 2023 | 13:22:00 | 15.75 | 4.804 | | 709.0 | 11.37 | 45.28 | 13.97 | 87.99 |
| May 25 2023 | 13:23:00 | 16.60 | 3.851 | | 690.9 | 8.752 | 57.70 | 20.48 | 69.17 |
| May 25 2023 | 13:24:00 | 16.25 | 4.755 | | 688.1 | 9.253 | 59.12 | 16.97 | 86.76 |
| May 25 2023 | 13:25:00 | 14.72 | 5.948 | | 1073 | 16.06 | 63.44 | 17.73 | 118.8 |
| May 25 2023 | 13:26:00 | 15.42 | 4.947 | | 993.4 | 14.68 | 69.82 | 26.10 | 100.1 |
| May 25 2023 | 13:27:00 | 16.24 | 4.198 | | 846.4 | 9.910 | 79.74 | 34.46 | 79.62 |
| May 25 2023 | 13:28:00 | 16.72 | 3.809 | | 771.5 | 7.253 | 55.72 | 28.91 | 67.22 |
| May 25 2023 | 13:29:00 | 16.52 | 4.237 | | 720.2 | 8.763 | 53.88 | 21.67 | 84.55 |
| May 25 2023 | 13:30:00 | 16.50 | 3.995 | | 610.0 | 10.60 | 42.19 | 17.48 | 80.64 |
| May 25 2023 | 13:31:00 | 17.11 | 3.394 | | 522.7 | 7.106 | 37.87 | 14.99 | 58.98 |
| May 25 2023 | 13:32:00 | 17.42 | 3.224 | | 478.8 | 5.391 | 39.85 | 12.69 | 50.92 |
| May 25 2023 | 13:33:00 | 17.37 | 3.365 | | 519.2 | 5.762 | 36.40 | 14.87 | 57.68 |
| May 25 2023 | 13:34:00 | 15.22 | 5.747 | | 579.8 | 10.98 | 45.86 | 12.19 | 104.1 |
| May 25 2023 | 13:35:00 | 14.51 | 6.215 | | 514.4 | 12.24 | 29.32 | 3.946 | 126.7 |
| End of port 1 point 1 | | | | | | | | | |
| May 25 2023 | 13:36:00 | 12.90 | 7.510 | | 426.5 | 14.12 | 11.64 | 3.931 | 144.1 |
| May 25 2023 | 13:37:00 | 12.71 | 8.376 | | 584.9 | 14.04 | 12.73 | 10.11 | 152.9 |
| May 25 2023 | 13:38:00 | 10.06 | 10.04 | | 334.3 | 22.03 | 8.030 | 1.770 | 185.2 |
| May 25 2023 | 13:39:00 | 12.43 | 7.778 | | 596.2 | 15.29 | 20.38 | 2.902 | 128.7 |
| May 25 2023 | 13:40:00 | 13.74 | 6.454 | | 784.7 | 9.429 | 39.85 | 9.226 | 98.33 |
| May 25 2023 | 13:41:00 | 14.57 | 5.792 | | 816.7 | 6.365 | 46.99 | 16.73 | 87.03 |
| May 25 2023 | 13:42:00 | 14.90 | 5.561 | | 758.0 | 5.932 | 40.27 | 15.22 | 82.63 |
| May 25 2023 | 13:43:00 | 14.58 | 6.110 | | 668.7 | 8.385 | 43.09 | 8.607 | 105.4 |
| May 25 2023 | 13:44:00 | 14.98 | 5.555 | | 562.5 | 7.895 | 24.15 | 6.144 | 93.29 |
| May 25 2023 | 13:45:00 | 14.21 | 6.464 | | 568.6 | 8.899 | 20.93 | 6.579 | 109.8 |
| May 25 2023 | 13:46:00 | 13.47 | 6.962 | | 465.9 | 8.976 | 11.79 | 3.750 | 112.4 |
| May 25 2023 | 13:47:00 | 13.95 | 6.469 | | 513.4 | 6.387 | 17.26 | 5.453 | 90.36 |
| May 25 2023 | 13:48:00 | 14.54 | 5.868 | | 571.8 | 4.609 | 25.73 | 6.489 | 77.79 |
| May 25 2023 | 13:49:00 | 15.23 | 5.207 | | 588.9 | 3.640 | 32.50 | 10.51 | 69.15 |
| May 25 2023 | 13:50:00 | 14.65 | 6.116 | | 842.5 | 6.506 | 53.82 | 21.97 | 101.1 |
| May 25 2023 | 13:51:00 | 13.94 | 6.321 | | 676.5 | 8.932 | 20.92 | 15.13 | 104.7 |



| MAQDAQ 1.0 | | | |
|---|---|---|---|
| Project Name: ODEQ ACI - Compliance Testing | Project Number: PROJ-021372 | CEMS Operator: SW | Unit/Condition: ACI |
| Run Length: 90 | Record Interval: 6 | Average Interval: 60 | Triplicate Sampling: True |
| Traverse: True | Ports: 1 | Points per port: 3 | DAQ Device: DT9806(01) |

| | | | | | | | | | |
|---|---|---|---|---|---|---|---|---|---|
| May 25 2023 | 13:52:00 | 14.31 | 6.149 | | 539.6 | 7.765 | 20.08 | 8.258 | 96.60 |
| May 25 2023 | 13:53:00 | 14.68 | 5.777 | | 462.1 | 5.659 | 18.75 | 6.123 | 85.93 |
| May 25 2023 | 13:54:00 | 15.26 | 5.082 | | 450.6 | 3.785 | 24.82 | 8.069 | 69.88 |
| May 25 2023 | 13:55:00 | 15.69 | 4.994 | | 514.7 | 2.923 | 30.52 | 10.81 | 64.21 |
| May 25 2023 | 13:56:00 | 15.91 | 4.502 | | 481.6 | 2.534 | 27.02 | 9.319 | 55.85 |
| May 25 2023 | 13:57:00 | 16.09 | 4.596 | | 493.3 | 2.167 | 30.44 | 11.54 | 58.48 |
| May 25 2023 | 13:58:00 | 15.21 | 5.723 | | 497.5 | 4.632 | 23.70 | 6.298 | 100.6 |
| May 25 2023 | 13:59:00 | 13.79 | 6.942 | | 422.1 | 9.705 | 17.15 | 6.756 | 122.0 |
| May 25 2023 | 14:00:00 | 12.03 | 8.306 | | 345.5 | 12.13 | 6.812 | 2.462 | 136.1 |
| May 25 2023 | 14:01:00 | 14.32 | 5.999 | | 450.7 | 7.993 | 15.28 | 5.432 | 89.98 |
| May 25 2023 | 14:02:00 | 15.13 | 5.290 | | 590.7 | 4.716 | 32.10 | 8.343 | 73.53 |
| May 25 2023 | 14:03:00 | 15.34 | 5.185 | | 636.3 | 3.118 | 37.90 | 10.03 | 65.44 |
| May 25 2023 | 14:04:00 | 15.77 | 4.718 | | 643.6 | 2.217 | 51.18 | 13.89 | 57.68 |
| May 25 2023 | 14:05:00 | 16.12 | 4.432 | | 704.5 | 1.908 | 54.68 | 16.42 | 52.60 |
| End of port 1 point 2 | | | | | | | | | |
| May 25 2023 | 14:06:00 | 16.30 | 4.273 | | 669.7 | 1.498 | 56.39 | 16.85 | 49.26 |
| May 25 2023 | 14:07:00 | 16.58 | 4.040 | | 660.5 | 1.523 | 61.00 | 16.65 | 45.63 |
| May 25 2023 | 14:08:00 | 16.55 | 4.012 | | 685.4 | 1.486 | 62.45 | 18.78 | 42.83 |
| May 25 2023 | 14:09:00 | 16.77 | 3.877 | | 616.9 | 1.408 | 59.25 | 19.09 | 42.14 |
| May 25 2023 | 14:10:00 | 16.83 | 3.744 | | 669.2 | 1.568 | 69.25 | 20.90 | 39.10 |
| May 25 2023 | 14:11:00 | 17.21 | 3.424 | | 653.7 | 1.527 | 71.03 | 19.84 | 35.24 |
| May 25 2023 | 14:12:00 | 17.36 | 3.280 | | 658.5 | 1.642 | 69.87 | 21.59 | 33.52 |
| May 25 2023 | 14:13:00 | 17.41 | 3.268 | | 708.8 | 1.641 | 71.22 | 21.56 | 32.86 |
| May 25 2023 | 14:14:00 | 17.72 | 2.929 | | 652.5 | 1.648 | 59.35 | 23.26 | 29.78 |
| May 25 2023 | 14:15:00 | 16.58 | 5.198 | | 642.8 | 2.495 | 50.23 | 22.84 | 82.98 |
| May 25 2023 | 14:16:00 | 11.02 | 8.899 | | 353.2 | 12.45 | 11.64 | 3.278 | 176.4 |
| May 25 2023 | 14:17:00 | 14.05 | 6.448 | | 597.7 | 10.91 | 21.53 | 6.473 | 108.1 |
| May 25 2023 | 14:18:00 | 14.53 | 5.836 | | 648.6 | 7.322 | 15.75 | 9.775 | 98.98 |
| May 25 2023 | 14:19:00 | 14.92 | 5.651 | | 526.7 | 6.083 | 23.40 | 7.012 | 85.54 |
| May 25 2023 | 14:20:00 | 15.40 | 5.047 | | 583.8 | 4.241 | 37.17 | 10.48 | 72.07 |
| May 25 2023 | 14:21:00 | 15.95 | 4.511 | | 674.5 | 3.026 | 45.98 | 14.14 | 62.00 |
| May 25 2023 | 14:22:00 | 16.55 | 4.084 | | 704.1 | 2.342 | 59.15 | 15.13 | 53.38 |
| May 25 2023 | 14:23:00 | 16.68 | 3.947 | | 772.1 | 2.011 | 69.31 | 20.50 | 47.88 |
| May 25 2023 | 14:24:00 | 16.75 | 3.887 | | 791.9 | 1.841 | 76.19 | 22.62 | 45.53 |
| May 25 2023 | 14:25:00 | 16.91 | 3.648 | | 716.9 | 1.673 | 64.60 | 20.01 | 41.07 |
| May 25 2023 | 14:26:00 | 14.70 | 6.712 | | 708.7 | 3.948 | 44.98 | 18.22 | 124.5 |
| May 25 2023 | 14:27:00 | 12.13 | 8.541 | | 364.7 | 10.34 | 5.938 | 2.248 | 159.0 |
| May 25 2023 | 14:28:00 | 12.48 | 7.861 | | 256.8 | 11.00 | 3.968 | 0.615 | 130.9 |
| May 25 2023 | 14:29:00 | 12.63 | 7.710 | | 319.1 | 10.13 | 3.564 | 1.411 | 141.9 |
| May 25 2023 | 14:30:00 | 12.84 | 7.576 | | 352.4 | 10.09 | 4.704 | 1.949 | 134.4 |
| May 25 2023 | 14:31:00 | 12.97 | 7.499 | | 307.3 | 9.840 | 4.116 | 1.361 | 123.8 |
| May 25 2023 | 14:32:00 | 14.21 | 6.026 | | 370.5 | 6.642 | 13.15 | 3.752 | 88.84 |
| May 25 2023 | 14:33:00 | 15.39 | 5.177 | | 541.3 | 3.902 | 23.15 | 7.917 | 69.73 |
| May 25 2023 | 14:34:00 | 15.60 | 4.934 | | 719.0 | 2.259 | 48.54 | 20.19 | 62.20 |
| May 25 2023 | 14:35:00 | 16.32 | 4.159 | | 669.8 | 1.767 | 51.37 | 15.41 | 51.08 |
| End of port 1 point 3 | | | | | | | | | |
| | **Average:** | 15.20 | 5.356 | | 675.7 | 7.462 | 42.64 | 15.03 | 86.71 |
| | **Max:** | 17.72 | 10.04 | | 1672 | 22.03 | 122.6 | 45.47 | 185.2 |
| | **Min:** | 10.06 | 2.929 | | 256.8 | 1.408 | 3.564 | 0.615 | 29.78 |

| MAQDAQ 1.0 | | | |
|---|---|---|---|
| Project Name: ODEQ ACI - Compliance Testing | Project Number: PROJ-021372 | CEMS Operator: SW | Unit/Condition: ACI |
| Run Length: 90 | Record Interval: 6 | Average Interval: 60 | Triplicate Sampling: True |
| Traverse: True | Ports: 1 | Points per port: 3 | DAQ Device: DT9806(01) |

## Stratification Results

| **Port** | **Point** | O2 SN-719 | CO2 SN-719 | | CO SN-743 | SO2 SN-3 | THC SN-718 | CH4 SN-718 | NOx SN-695 |
|---|---|---|---|---|---|---|---|---|---|
| 1 | 1 | 15.95 | 4.755 | | 860.6 | 10.42 | 57.28 | 23.59 | 88.01 |
| 1 | 2 | 14.33 | 6.140 | | 572.8 | 7.198 | 28.12 | 9.448 | 94.93 |
| 1 | 3 | 15.34 | 5.207 | | 580.7 | 4.611 | 41.90 | 13.15 | 77.36 |
| | **Strat diff:** | 0.743 | 0.773 | | 189.2 | 3.010 | 14.85 | 8.194 | 8.163 |
| | **Strat %:** | 5.765 | 2.987 | | 28.19 | 40.63 | 34.99 | 53.22 | 9.408 |

| MAQDAQ 1.0 | | | |
|---|---|---|---|
| Project Name: ODEQ ACI - Compliance Testing | Project Number: PROJ-021372 | CEMS Operator: SW | Unit/Condition: ACI |
| Run Length: 90 | Record Interval: 6 | Average Interval: 60 | Triplicate Sampling: True |
| Traverse: True | Ports: 1 | Points per port: 3 | DAQ Device: DT9806(01) |

## Run 3 Post run bias - Run 6 - Part 1

## 13:05:00 - 14:35:00

| | | | | | | | | | |
|---|---|---|---|---|---|---|---|---|---|
| | **Name:** | O2 SN-719 | CO2 SN-719 | | CO SN-743 | SO2 SN-3 | THC SN-718 | CH4 SN-718 | NOx SN-695 |
| | **Make/Model:** | | | | | | | | |
| | **25A or 7E:** | 7E | 7E | | 7E | 7E | 25A | 25A | 7E |
| | **Run summary data** | | | | | | | | |
| | **Raw Avg:** | 15.20 | 5.356 | | 675.7 | 7.462 | 42.64 | 15.03 | 86.71 |
| | **Max:** | 17.72 | 10.04 | | 1672 | 22.03 | 122.6 | 45.47 | 185.2 |
| | **Min:** | 10.06 | 2.929 | | 256.8 | 1.408 | 3.564 | 0.615 | 29.78 |
| | **Cylinder Concentrations** | | | | | | | | |
| | **Zero:** | 0.000 | 0.000 | | 0.000 | 0.000 | 0.000 | 0.000 | 0.000 |
| | **Low:** | | | | | | 297.1 | 297.1 | |
| | **Mid:** | 10.04 | 9.946 | | 3997 | 15.20 | 495.7 | 495.7 | 127.6 |
| | **High:** | 23.21 | 22.54 | | 7911 | 30.29 | 874.8 | 874.8 | 279.5 |
| | **Calibration Readings** | | | | | | | | |
| | **Zero reading:** | 0.032 | -0.105 | | -5.500 | 0.107 | 0.370 | 0.180 | 0.196 |
| | **Low reading:** | | | | | | 306.9 | 307.9 | |
| | **Mid reading:** | 9.998 | 9.863 | | 3989 | 15.28 | 511.1 | 511.3 | 129.7 |
| | **High reading:** | 23.21 | 22.61 | | 7870 | 30.34 | 873.8 | 874.6 | 282.1 |
| **EPA Method 7E Error Calculations** | | | | | | | | | |
| **Zero %Err:** | **<2.0** | 0.138 | -0.466 | | -0.070 | 0.353 | N/A | N/A | 0.070 |
| **Mid %Err:** | **<2.0** | -0.181 | -0.368 | | -0.101 | 0.264 | N/A | N/A | 0.751 |
| **High %Err:** | **<2.0** | 0.000 | 0.311 | | -0.518 | 0.165 | N/A | N/A | 0.930 |
| **EPA Method 25A Error Calculations** | | | | | | | | | |
| **Zero %Err:** | **N/A** | N/A | N/A | | N/A | N/A | 0.370 | 0.180 | N/A |
| **Low %Err:** | **5% of cyl** | N/A | N/A | | N/A | N/A | 9.800 | 10.80 | N/A |
| **Mid %Err:** | **5% of cyl** | N/A | N/A | | N/A | N/A | 15.40 | 15.60 | N/A |
| **High %Err:** | **N/A** | N/A | N/A | | N/A | N/A | -1.000 | -0.200 | N/A |
| **Initial Bias Data** | | | | | | | | | |
| | **Zero reading:** | 0.009 | 0.113 | | 11.90 | 1.404 | 0.850 | 0.920 | 1.332 |
| | **Span reading:** | 22.88 | 9.793 | | 3915 | 29.14 | 513.8 | 513.6 | 133.5 |
| **Zero % bias:** | **<5.0** | -0.099 | 0.967 | | 0.220 | 4.282 | N/A | N/A | 0.406 |
| **Span % bias:** | **<5.0** | -1.422 | -0.311 | | -0.935 | -3.962 | N/A | N/A | 1.360 |
| **Final Bias Data** | | | | | | | | | |
| | **Zero reading:** | -0.068 | 0.188 | | 14.00 | 0.601 | 0.430 | 0.370 | 2.220 |
| | **Span reading:** | 22.82 | 9.825 | | 4002 | 29.86 | 514.1 | 513.2 | 135.5 |
| **Zero % bias:** | **<5.0** | -0.431 | 1.300 | | 0.247 | 1.631 | N/A | N/A | 0.724 |
| **Span % bias:** | **<5.0** | -1.680 | -0.169 | | 0.164 | -1.585 | N/A | N/A | 2.075 |
| **Zero % drift:** | **<3.0** | 0.332 | 0.333 | | 0.026 | 2.651 | N/A | N/A | 0.318 |
| **Span % drift:** | **<3.0** | 0.258 | 0.142 | | 1.099 | 2.377 | N/A | N/A | 0.715 |
| **Zero drift:** | **<3.0% span** | N/A | N/A | | N/A | N/A | 0.420 | 0.550 | N/A |
| **Span drift:** | **<3.0% span** | N/A | N/A | | N/A | N/A | -0.300 | 0.400 | N/A |
| **Bias Corrected Averages** | | | | | | | | | |
| | **Cor Avg:** | 15.45 | 5.360 | | 671.4 | 6.866 | 42.64 | 15.03 | 81.66 |

| MAQDAQ 1.0 | | | |
|---|---|---|---|
| Project Name: ODEQ ACI - Compliance Testing | Project Number: PROJ-021372 | CEMS Operator: SW | Unit/Condition: ACI |
| Run Length: 90 | Record Interval: 6 | Average Interval: 60 | Triplicate Sampling: True |
| Traverse: True | Ports: 1 | Points per port: 3 | DAQ Device: DT9806(01) |

## Run 4 Average Results - Run 6 - Part 2

## 14:58:00 - 16:28:00

| | **Name:** | O2 SN-719 | CO2 SN-719 | | CO SN-743 | SO2 SN-3 | THC SN-718 | CH4 SN-718 | NOx SN-695 |
|---|---|---|---|---|---|---|---|---|---|
| | **Make/Model:** | | | | | | | | |
| May 25 2023 | 14:59:00 | 14.54 | 6.123 | | 556.9 | 3.087 | 20.46 | 10.75 | 99.4 |
| May 25 2023 | 15:00:00 | 12.73 | 8.349 | | 402.8 | 8.033 | 4.415 | 5.049 | 149.9 |
| May 25 2023 | 15:01:00 | 11.97 | 8.089 | | 336.8 | 9.932 | 7.568 | 1.395 | 126.9 |
| May 25 2023 | 15:02:00 | 13.18 | 7.099 | | 426.7 | 5.626 | 14.49 | 2.099 | 101.4 |
| May 25 2023 | 15:03:00 | 14.02 | 6.416 | | 489.5 | 3.608 | 17.03 | 4.254 | 86.97 |
| May 25 2023 | 15:04:00 | 14.47 | 5.945 | | 573.3 | 2.022 | 27.35 | 8.849 | 77.09 |
| May 25 2023 | 15:05:00 | 15.17 | 5.340 | | 590.6 | 1.365 | 28.96 | 11.76 | 66.64 |
| May 25 2023 | 15:06:00 | 14.92 | 5.744 | | 640.4 | 1.800 | 29.21 | 10.20 | 94.64 |
| May 25 2023 | 15:07:00 | 11.35 | 10.04 | | 441.2 | 10.82 | 7.607 | 8.082 | 193.2 |
| May 25 2023 | 15:08:00 | 9.732 | 10.22 | | 119.1 | 18.87 | 1.821 | 2.000 | 174.9 |
| May 25 2023 | 15:09:00 | 12.91 | 7.310 | | 208.5 | 9.829 | 2.445 | 0.414 | 109.4 |
| May 25 2023 | 15:10:00 | 14.42 | 6.002 | | 396.6 | 4.259 | 14.56 | 3.924 | 80.69 |
| May 25 2023 | 15:11:00 | 14.94 | 5.495 | | 474.5 | 1.979 | 25.42 | 7.264 | 70.19 |
| May 25 2023 | 15:12:00 | 14.25 | 6.592 | | 576.5 | 3.753 | 22.84 | 8.606 | 122.3 |
| May 25 2023 | 15:13:00 | 13.43 | 6.966 | | 415.2 | 9.864 | 7.055 | 3.085 | 136.7 |
| May 25 2023 | 15:14:00 | 11.50 | 8.820 | | 257.5 | 14.20 | 2.421 | 0.519 | 187.0 |
| May 25 2023 | 15:15:00 | 12.53 | 7.849 | | 188.2 | 13.19 | 3.876 | 0.894 | 140.5 |
| May 25 2023 | 15:16:00 | 13.76 | 6.624 | | 428.8 | 7.221 | 7.114 | 2.490 | 97.63 |
| May 25 2023 | 15:17:00 | 14.30 | 6.195 | | 531.1 | 3.758 | 19.62 | 6.238 | 86.74 |
| May 25 2023 | 15:18:00 | 14.94 | 5.587 | | 588.5 | 1.924 | 35.06 | 9.631 | 71.71 |
| May 25 2023 | 15:19:00 | 15.73 | 4.800 | | 767.4 | 1.322 | 56.12 | 17.87 | 60.02 |
| May 25 2023 | 15:20:00 | 15.94 | 4.524 | | 768.2 | 0.877 | 52.09 | 17.86 | 54.28 |
| May 25 2023 | 15:21:00 | 15.47 | 5.418 | | 684.3 | 2.781 | 32.40 | 14.49 | 94.23 |
| May 25 2023 | 15:22:00 | 12.88 | 7.718 | | 446.8 | 9.006 | 5.789 | 6.782 | 149.2 |
| May 25 2023 | 15:23:00 | 11.98 | 8.412 | | 306.2 | 11.07 | 7.300 | 1.263 | 152.8 |
| May 25 2023 | 15:24:00 | 13.41 | 7.153 | | 408.0 | 7.837 | 9.286 | 5.569 | 107.3 |
| May 25 2023 | 15:25:00 | 14.60 | 5.824 | | 587.6 | 4.281 | 32.39 | 6.660 | 79.66 |
| May 25 2023 | 15:26:00 | 15.55 | 4.989 | | 743.0 | 1.941 | 54.86 | 13.52 | 65.30 |
| May 25 2023 | 15:27:00 | 15.60 | 4.956 | | 795.6 | 1.565 | 51.07 | 13.85 | 71.41 |
| May 25 2023 | 15:28:00 | 15.05 | 5.534 | | 659.7 | 2.153 | 31.74 | 11.21 | 83.94 |
| End of port 1 point 1 | | | | | | | | | |
| May 25 2023 | 15:29:00 | 14.25 | 6.450 | | 531.4 | 3.892 | 26.88 | 6.542 | 105.4 |
| May 25 2023 | 15:30:00 | 12.28 | 8.060 | | 271.6 | 8.723 | 3.281 | 1.848 | 142.7 |
| May 25 2023 | 15:31:00 | 12.18 | 8.399 | | 245.0 | 8.617 | 2.972 | 0.163 | 130.5 |
| May 25 2023 | 15:32:00 | 12.04 | 8.401 | | 251.7 | 8.250 | 3.415 | 0.164 | 121.0 |
| May 25 2023 | 15:33:00 | 12.55 | 7.857 | | 288.5 | 6.102 | 4.273 | 1.169 | 107.2 |
| May 25 2023 | 15:34:00 | 13.20 | 7.130 | | 456.2 | 5.011 | 17.52 | 2.862 | 93.65 |
| May 25 2023 | 15:35:00 | 13.72 | 6.809 | | 531.0 | 2.992 | 19.29 | 5.274 | 86.75 |
| May 25 2023 | 15:36:00 | 13.80 | 6.736 | | 552.2 | 1.490 | 28.81 | 9.610 | 82.85 |
| May 25 2023 | 15:37:00 | 14.29 | 6.178 | | 643.2 | 1.071 | 37.58 | 12.46 | 73.03 |
| May 25 2023 | 15:38:00 | 14.77 | 5.723 | | 774.2 | 0.920 | 52.98 | 16.60 | 66.99 |
| May 25 2023 | 15:39:00 | 15.11 | 5.400 | | 807.6 | 0.918 | 53.06 | 18.53 | 60.68 |
| May 25 2023 | 15:40:00 | 15.52 | 4.937 | | 765.2 | 0.784 | 55.34 | 16.65 | 53.77 |
| May 25 2023 | 15:41:00 | 15.72 | 4.833 | | 785.7 | 0.774 | 58.27 | 21.40 | 50.03 |
| May 25 2023 | 15:42:00 | 15.68 | 4.870 | | 887.9 | 0.744 | 64.00 | 20.63 | 48.81 |
| May 25 2023 | 15:43:00 | 16.01 | 4.535 | | 920.5 | 0.915 | 60.30 | 22.63 | 44.85 |
| May 25 2023 | 15:44:00 | 16.15 | 4.422 | | 924.4 | 1.015 | 68.89 | 23.85 | 43.65 |

| MAQDAQ 1.0 | | | |
|---|---|---|---|
| Project Name: ODEQ ACI - Compliance Testing | Project Number: PROJ-021372 | CEMS Operator: SW | Unit/Condition: ACI |
| Run Length: 90 | Record Interval: 6 | Average Interval: 60 | Triplicate Sampling: True |
| Traverse: True | Ports: 1 | Points per port: 3 | DAQ Device: DT9806(01) |

| | | | | | | | | | |
|---|---|---|---|---|---|---|---|---|---|
| May 25 2023 | 15:45:00 | 15.40 | 5.747 | | 958.4 | 1.176 | 57.98 | 21.96 | 82.48 |
| May 25 2023 | 15:46:00 | 12.34 | 7.990 | | 590.2 | 2.303 | 8.824 | 4.835 | 164.8 |
| May 25 2023 | 15:47:00 | 10.82 | 9.829 | | 294.0 | 9.312 | 1.435 | 3.162 | 204.5 |
| May 25 2023 | 15:48:00 | 8.372 | 11.98 | | 83.83 | 19.33 | 1.307 | -0.143 | 232.7 |
| May 25 2023 | 15:49:00 | 10.38 | 9.626 | | 25.50 | 14.99 | 1.161 | -0.177 | 169.7 |
| May 25 2023 | 15:50:00 | 12.63 | 7.693 | | 138.0 | 7.809 | 2.350 | 0.283 | 123.8 |
| May 25 2023 | 15:51:00 | 13.69 | 6.639 | | 277.9 | 4.641 | 4.681 | 0.974 | 96.01 |
| May 25 2023 | 15:52:00 | 14.46 | 5.925 | | 444.0 | 2.730 | 17.16 | 5.511 | 80.79 |
| May 25 2023 | 15:53:00 | 15.16 | 5.260 | | 540.3 | 1.637 | 32.26 | 8.729 | 70.51 |
| May 25 2023 | 15:54:00 | 15.69 | 4.788 | | 647.6 | 1.073 | 52.61 | 13.93 | 61.16 |
| May 25 2023 | 15:55:00 | 16.17 | 4.252 | | 693.0 | 1.052 | 70.61 | 16.28 | 52.10 |
| May 25 2023 | 15:56:00 | 16.98 | 3.692 | | 757.5 | 0.838 | 67.97 | 15.86 | 44.46 |
| May 25 2023 | 15:57:00 | 16.63 | 3.923 | | 924.2 | 1.032 | 72.86 | 20.61 | 44.27 |
| May 25 2023 | 15:58:00 | 16.97 | 3.587 | | 1045 | 1.019 | 80.19 | 25.69 | 37.73 |
| End of port 1 point 2 | | | | | | | | | |
| May 25 2023 | 15:59:00 | 17.13 | 3.416 | | 1194 | 1.172 | 87.95 | 25.97 | 34.85 |
| May 25 2023 | 16:00:00 | 17.45 | 3.111 | | 1259 | 1.230 | 98.87 | 30.43 | 31.38 |
| May 25 2023 | 16:01:00 | 17.98 | 2.604 | | 1232 | 1.471 | 96.52 | 30.19 | 27.45 |
| May 25 2023 | 16:02:00 | 18.08 | 2.922 | | 1312 | 1.441 | 106.2 | 29.00 | 31.92 |
| May 25 2023 | 16:03:00 | 16.52 | 4.416 | | 1222 | 3.073 | 67.20 | 20.92 | 77.50 |
| May 25 2023 | 16:04:00 | 9.931 | 11.26 | | 275.8 | 14.02 | 7.654 | 3.281 | 254.5 |
| May 25 2023 | 16:05:00 | 10.75 | 9.201 | | 88.34 | 22.42 | 3.087 | -0.236 | 199.1 |
| May 25 2023 | 16:06:00 | 14.48 | 5.736 | | 223.7 | 16.96 | 8.761 | 1.381 | 128.1 |
| May 25 2023 | 16:07:00 | 15.65 | 4.771 | | 365.8 | 11.65 | 11.44 | 4.384 | 103.7 |
| May 25 2023 | 16:08:00 | 16.19 | 4.302 | | 399.3 | 8.843 | 15.72 | 4.990 | 84.59 |
| May 25 2023 | 16:09:00 | 16.86 | 3.706 | | 460.4 | 6.504 | 27.59 | 7.422 | 70.99 |
| May 25 2023 | 16:10:00 | 17.37 | 3.186 | | 579.2 | 4.554 | 37.74 | 12.04 | 56.42 |
| May 25 2023 | 16:11:00 | 17.85 | 2.812 | | 691.1 | 3.554 | 46.98 | 15.05 | 48.98 |
| May 25 2023 | 16:12:00 | 18.01 | 2.632 | | 795.5 | 3.110 | 57.20 | 19.43 | 43.69 |
| May 25 2023 | 16:13:00 | 18.28 | 2.406 | | 858.5 | 2.853 | 67.51 | 21.38 | 38.25 |
| May 25 2023 | 16:14:00 | 18.37 | 2.299 | | 887.2 | 2.525 | 71.44 | 22.83 | 34.05 |
| May 25 2023 | 16:15:00 | 18.51 | 2.168 | | 953.2 | 2.247 | 83.01 | 25.40 | 30.48 |
| May 25 2023 | 16:16:00 | 18.68 | 2.026 | | 996.6 | 2.086 | 85.07 | 27.53 | 26.02 |
| May 25 2023 | 16:17:00 | 18.88 | 1.888 | | 973.5 | 2.022 | 87.03 | 29.47 | 24.43 |
| May 25 2023 | 16:18:00 | 18.80 | 1.932 | | 1015 | 1.872 | 89.78 | 32.40 | 23.63 |
| May 25 2023 | 16:19:00 | 18.89 | 1.838 | | 1051 | 1.880 | 96.94 | 32.21 | 21.81 |
| May 25 2023 | 16:20:00 | 19.00 | 1.730 | | 1019 | 2.018 | 96.40 | 33.23 | 19.76 |
| May 25 2023 | 16:21:00 | 19.09 | 1.658 | | 990.8 | 1.933 | 94.33 | 32.01 | 18.93 |
| May 25 2023 | 16:22:00 | 19.15 | 1.596 | | 914.7 | 1.979 | 92.69 | 31.29 | 17.90 |
| May 25 2023 | 16:23:00 | 19.17 | 1.609 | | 970.6 | 2.049 | 93.74 | 33.11 | 17.60 |
| May 25 2023 | 16:24:00 | 19.25 | 1.494 | | 907.9 | 2.099 | 78.26 | 32.67 | 15.94 |
| May 25 2023 | 16:25:00 | 19.36 | 1.411 | | 819.5 | 2.002 | 75.56 | 29.48 | 15.21 |
| May 25 2023 | 16:26:00 | 19.34 | 1.440 | | 852.0 | 2.085 | 82.63 | 29.01 | 15.08 |
| May 25 2023 | 16:27:00 | 19.32 | 1.449 | | 928.6 | 2.082 | 87.70 | 30.99 | 14.54 |
| May 25 2023 | 16:28:00 | 19.39 | 1.382 | | 928.4 | 2.146 | 88.50 | 33.30 | 13.53 |
| End of port 1 point 3 | | | | | | | | | |

| | | | | | | | | | |
|---|---|---|---|---|---|---|---|---|---|
| | **Average:** | 15.18 | 5.380 | | 633.7 | 4.811 | 41.16 | 13.50 | 83.44 |
| | **Max:** | 19.39 | 11.98 | | 1312 | 22.42 | 106.2 | 33.30 | 254.5 |
| | **Min:** | 8.372 | 1.382 | | 25.50 | 0.744 | 1.161 | -0.236 | 13.53 |

| MAQDAQ 1.0 | | | |
|---|---|---|---|
| Project Name: ODEQ ACI - Compliance Testing | Project Number: PROJ-021372 | CEMS Operator: SW | Unit/Condition: ACI |
| Run Length: 90 | Record Interval: 6 | Average Interval: 60 | Triplicate Sampling: True |
| Traverse: True | Ports: 1 | Points per port: 3 | DAQ Device: DT9806(01) |

## Stratification Results

| **Port** | **Point** | O2 SN-719 | CO2 SN-719 | | CO SN-743 | SO2 SN-3 | THC SN-718 | CH4 SN-718 | NOx SN-695 |
|---|---|---|---|---|---|---|---|---|---|
| 1 | 1 | 13.90 | 6.605 | | 484.5 | 5.947 | 21.13 | 7.413 | 104.5 |
| 1 | 2 | 14.14 | 6.376 | | 586.3 | 3.993 | 34.98 | 11.54 | 92.78 |
| 1 | 3 | 17.74 | 3.043 | | 838.2 | 4.483 | 68.49 | 22.70 | 50.11 |
| | **Strat diff:** | 2.480 | 1.264 | | 201.9 | 1.139 | 26.96 | 8.816 | 22.04 |
| | **Strat %:** | 8.912 | 43.03 | | 7.863 | 6.753 | 64.90 | 63.49 | 39.23 |

| MAQDAQ 1.0 | | | |
|---|---|---|---|
| Project Name: ODEQ ACI - Compliance Testing | Project Number: PROJ-021372 | CEMS Operator: SW | Unit/Condition: ACI |
| Run Length: 90 | Record Interval: 6 | Average Interval: 60 | Triplicate Sampling: True |
| Traverse: True | Ports: 1 | Points per port: 3 | DAQ Device: DT9806(01) |

## Run 4 Post run bias - Run 6 - Part 2

## 14:58:00 - 16:28:00

| | | | | | | | | | |
|---|---|---|---|---|---|---|---|---|---|
| | **Name:** | O2 SN-719 | CO2 SN-719 | | CO SN-743 | SO2 SN-3 | THC SN-718 | CH4 SN-718 | NOx SN-695 |
| | **Make/Model:** | | | | | | | | |
| | **25A or 7E:** | 7E | 7E | | 7E | 7E | 25A | 25A | 7E |
| | **Run summary data** | | | | | | | | |
| | **Raw Avg:** | 15.18 | 5.380 | | 633.7 | 4.811 | 41.16 | 13.50 | 83.44 |
| | **Max:** | 19.39 | 11.98 | | 1312 | 22.42 | 106.2 | 33.30 | 254.5 |
| | **Min:** | 8.372 | 1.382 | | 25.50 | 0.744 | 1.161 | -0.236 | 13.53 |
| | **Cylinder Concentrations** | | | | | | | | |
| | **Zero:** | 0.000 | 0.000 | | 0.000 | 0.000 | 0.000 | 0.000 | 0.000 |
| | **Low:** | | | | | | 297.1 | 297.1 | |
| | **Mid:** | 10.04 | 9.946 | | 3997 | 15.20 | 495.7 | 495.7 | 127.6 |
| | **High:** | 23.21 | 22.54 | | 7911 | 30.29 | 874.8 | 874.8 | 279.5 |
| | **Calibration Readings** | | | | | | | | |
| | **Zero reading:** | 0.032 | -0.105 | | -5.500 | 0.107 | 0.370 | 0.180 | 0.196 |
| | **Low reading:** | | | | | | 306.9 | 307.9 | |
| | **Mid reading:** | 9.998 | 9.863 | | 3989 | 15.28 | 511.1 | 511.3 | 129.7 |
| | **High reading:** | 23.21 | 22.61 | | 7870 | 30.34 | 873.8 | 874.6 | 282.1 |
| **EPA Method 7E Error Calculations** | | | | | | | | | |
| **Zero %Err:** | **<2.0** | 0.138 | -0.466 | | -0.070 | 0.353 | N/A | N/A | 0.070 |
| **Mid %Err:** | **<2.0** | -0.181 | -0.368 | | -0.101 | 0.264 | N/A | N/A | 0.751 |
| **High %Err:** | **<2.0** | 0.000 | 0.311 | | -0.518 | 0.165 | N/A | N/A | 0.930 |
| **EPA Method 25A Error Calculations** | | | | | | | | | |
| **Zero %Err:** | **N/A** | N/A | N/A | | N/A | N/A | 0.370 | 0.180 | N/A |
| **Low %Err:** | **5% of cyl** | N/A | N/A | | N/A | N/A | 9.800 | 10.80 | N/A |
| **Mid %Err:** | **5% of cyl** | N/A | N/A | | N/A | N/A | 15.40 | 15.60 | N/A |
| **High %Err:** | **N/A** | N/A | N/A | | N/A | N/A | -1.000 | -0.200 | N/A |
| | **Initial Bias Data** | | | | | | | | |
| | **Zero reading:** | -0.068 | 0.188 | | 14.00 | 0.601 | 0.430 | 0.370 | 2.220 |
| | **Span reading:** | 22.82 | 9.825 | | 4002 | 29.86 | 514.1 | 513.2 | 135.5 |
| **Zero % bias:** | **<5.0** | -0.431 | 1.300 | | 0.247 | 1.631 | N/A | N/A | 0.724 |
| **Span % bias:** | **<5.0** | -1.680 | -0.169 | | 0.164 | -1.585 | N/A | N/A | 2.075 |
| | **Final Bias Data** | | | | | | | | |
| | **Zero reading:** | 0.052 | 0.259 | | 3.100 | 1.224 | 0.520 | 0.400 | 1.392 |
| | **Span reading:** | 22.83 | 9.763 | | 3972 | 29.76 | 513.5 | 510.7 | 137.6 |
| **Zero % bias:** | **<5.0** | 0.086 | 1.615 | | 0.109 | 3.688 | N/A | N/A | 0.428 |
| **Span % bias:** | **<5.0** | -1.637 | -0.444 | | -0.215 | -1.915 | N/A | N/A | 2.827 |
| **Zero % drift:** | **<3.0** | 0.517 | 0.315 | | 0.137 | 2.057 | N/A | N/A | 0.296 |
| **Span % drift:** | **<3.0** | 0.043 | 0.275 | | 0.379 | 0.330 | N/A | N/A | 0.751 |
| **Zero drift:** | **<3.0% span** | N/A | N/A | | N/A | N/A | -0.090 | -0.030 | N/A |
| **Span drift:** | **<3.0% span** | N/A | N/A | | N/A | N/A | 0.600 | 2.500 | N/A |
| | **Bias Corrected Averages** | | | | | | | | |
| | **Cor Avg:** | 15.44 | 5.359 | | 628.1 | 4.086 | 41.16 | 13.50 | 77.31 |

# Appendix A.9
# PM Calculations/Results

# SOURCE TEST DATA SUMMARY

## OREGON DEQ METHOD 5

| | | | | |
|---|---|---|---|---|
| Client | | | | Oregon DEQ |
| Unit / Location | | | | ACI |
| A (stack area), $ft^2$ | | | | 0.785 |
| $T_{ref}$ (reference temperature), °F | | | | 68 |
| $F_d$ (fuel "F" factor @ $T_{ref}$), dscf/MMBtu | 9,778 | 9,778 | 9,960 | 9,839 |
| Production Basis, tons/hr wood fuel | 0.847 | 0.590 | 0.910 | 0.782 |
| Test number | Run 1 | Run 2 | Run 3 | Average |
| Date | 5/23/2023 | 5/23/2023 | 5/24/2023 | -- |
| Start / Stop time | 0950-1250 | 1410-1710 | 0925-1225 | -- |
| Meter box number | MB 31 | MB 31 | MB 31 | -- |
| $C_p$ (pitot coefficient), dimensionless | 0.84 | 0.84 | 0.84 | 0.84 |
| Y (meter calibration factor), dimensionless | 0.9953 | 0.9953 | 0.9953 | 0.9953 |
| Θ (sample time), min | 180.0 | 180.0 | 180.0 | 180.0 |
| Nozzle diameter, in | 0.191 | 0.191 | 0.191 | 0.191 |
| $P_{bar}$ (barometric pressure), in Hg | 29.96 | 29.96 | 29.88 | 29.93 |
| $V_m$ (meter box volume), acf | 141.489 | 132.934 | 123.750 | 132.724 |
| $V_{lc}$ (impinger liquid ), gm | 259.4 | 219.1 | 264.1 | 247.5 |
| $T_m$ (meter temperature), °F | 73.5 | 86.2 | 76.9 | 78.9 |
| ΔH (meter pressure), in. $H_2O$ | 2.025 | 1.800 | 1.467 | 1.764 |
| ΔP (velocity head), in. $H_2O$ | 3.5605 | 3.5039 | 3.0766 | 3.3803 |
| $P_g$ (static pressure), in. $H_2O$ | -7.00 | -7.00 | -5.70 | -6.57 |
| $T_s$ (stack temperature), °F | 796.7 | 895.1 | 871.8 | 854.5 |
| $\%O_2$ (oxygen stack gas), % volume dry | 16.63 | 16.19 | 15.84 | 16.22 |
| $\%CO_2$ (carbon dioxide stack gas), % volume dry | 4.18 | 4.57 | 5.00 | 4.58 |
| **PM** | | | | |
| $m_{nf}$ (F½ particulate matter catch - combined), mg | 707.56 | 973.96 | 967.850 | 883.12 |
| $m_{nb}$ (B½ particulate matter catch - combined), mg | 265.40 | 190.96 | 210.34 | 222.23 |
| $m_n$ (total particulate matter catch - combined), mg | 972.96 | 1164.92 | 1178.19 | 1105.36 |
| **OREGON DEQ ANALYTICAL DETECTION LIMIT** | | | | |
| $m_n$ (particulate matter catch - ADL), mg | 7.00 | 7.00 | 7.00 | 7.00 |
| $m_n$ (particulate matter catch - REPORTING), mg | 972.96 | 1164.92 | 1178.19 | 1105.36 |
| 1a $V_{m(std)}$ (standard sample volume), dscf | 140.196 | 128.594 | 121.349 | 130.046 |
| 1b $V_{w(std)}$ (water vapor volume), scf | 12.231 | 10.331 | 12.452 | 11.671 |
| 1c $B_{ws}$ (moisture fraction), non-dimensional | 0.0802 | 0.0744 | 0.0931 | 0.0826 |
| $B_{ws}$ (moisture fraction saturated), non-dimensional | NA | NA | NA | NA |
| $B_{ws}$ (moisture fraction applicable), non-dimensional | 0.0802 | 0.0744 | 0.0931 | 0.0826 |
| 1d $M_d$ (stack gas molecular weight), dry | 29.334 | 29.379 | 29.433 | 29.382 |
| 1e $M_s$ (stack gas molecular weight), wet | 28.424 | 28.533 | 28.369 | 28.442 |
| 1f $P_s$ (absolute stack pressure), in Hg | 29.445 | 29.445 | 29.461 | 29.450 |
| 1g $V_s$ (stack gas velocity), ft/sec | 166.037 | 170.717 | 158.999 | 165.251 |
| 1h Q (stack flow rate), acf/min | 7,824 | 8,045 | 7,493 | 7,787 |
| 1i $Q_{sw}$ (stack flow rate), wscf/min | 3,235 | 3,085 | 2,925 | 3,082 |
| 1j $Q_{sd}$ (stack flow rate), dscf/min | 2,976 | 2,855 | 2,653 | 2,828 |
| I (isokinetic ratio), % | 103.3 | 98.8 | 100.3 | 100.8 |
| 3a $C_S$ (F½ grain loading), gr/dscf | 0.0777 | 0.1166 | 0.1228 | 0.1057 |
| 3c E (F½ mass emissions), lb/hr | 1.982 | 2.855 | 2.793 | 2.543 |
| 3d E (F½ mass emissions), lb/MMBtu | 0.531 | 0.723 | 0.722 | 0.659 |
| E (F½ mass emissions), lb/ton wood fuel | 2.341 | 4.839 | 3.069 | 3.416 |
| 3a $C_S$ (B½ grain loading), gr/dscf | 0.0292 | 0.0229 | 0.0267 | 0.0262 |
| 3c M (B½ mass emissions), lb/hr | 0.744 | 0.560 | 0.607 | 0.637 |
| 3d E (B½ mass emissions), lb/MMBtu | 0.199 | 0.142 | 0.157 | 0.166 |
| E (B½ mass emissions), lb/ton wood fuel | 0.878 | 0.949 | 0.667 | 0.831 |
| 3a $C_S$ (total grain loading), gr/dscf | 0.1069 | 0.1395 | 0.1495 | 0.1320 |
| 3c M (total mass emissions), lb/hr | 2.726 | 3.415 | 3.400 | 3.180 |
| 3d E (total mass emissions), lb/MMBtu | 0.730 | 0.865 | 0.879 | 0.824 |
| E (total mass emissions), lb/ton wood fuel | 3.220 | 5.787 | 3.736 | 4.248 |

# LAB SUMMARY

## OREGON DEQ METHOD 5

| | | | | |
|---|---|---|---|---|
| Client | | | | Oregon DEQ |
| Unit / Location | | | | ACI |
| Test number | Run 1 | Run 2 | Run 3 | Average |
| Date | 5/23/2023 | 5/23/2023 | 5/24/2023 | -- |
| Start / Stop time | 0950-1250 | 1410-1710 | 0925-1225 | -- |
| **BLANK** | | | | |
| Solvent | Acetone | Water | Dichloromethane | |
| $V_a$ (volume of blank), ml | 238 | 248 | 150 | -- |
| $m_a$ (mass of residue in solvent), mg-PM residue | 0.00 | 0.00 | 0.00 | -- |
| $m_{max}$ (mass of residue in solvent correction limit), mg-PM residue | 1.88 | 2.48 | 1.99 | -- |
| $\rho_a$ (density of solvent) mg-solvent/ml-solvent | 791 | 1,000 | 1,325 | -- |
| $C_a$ (solvent blank residue conc.) mg-PM residue/mg-solvent | 0.000000 | 0.000000 | 0.000000 | -- |
| $C_{max}$ (solvent blank residue conc. limit) mg-PM residue/mg-solvent | 0.000010 | 0.000010 | 0.000010 | -- |
| $C_a$ (solvent blank residue conc. applicable) mg-PM residue/mg-solvent | 0.000000 | 0.000000 | 0.000000 | -- |
| **PM** | | | | |
| $m_f$ (F½ particulate matter catch - filter), mg | 506.58 | 761.82 | 694.61 | 654.34 |
| $V_{aw}$ (volume of acetone wash used) ml-Acetone | 114 | 108 | 126 | -- |
| $W_a$ (residue in acetone wash) mg-PM residue | 0.000 | 0.000 | 0.000 | -- |
| $m_a$ (F½ particulate matter catch - acetone rinse), mg | 200.98 | 212.14 | 273.24 | 228.79 |
| $m_a$ (F½ particulate matter catch - acetone rinse corrected), mg | 200.98 | 212.14 | 273.24 | 228.79 |
| $m_{nf}$ (F½ particulate matter catch - combined), mg | 707.56 | 973.96 | 967.85 | 883.12 |
| $V_{ww}$ (volume of DI $H_2O$ sample), ml-water | 555 | 520 | 560 | -- |
| $V_{ww}$ (volume of DI $H_2O$ wash & impinger charge used), ml-water | 326 | 331 | 330 | -- |
| $W_w$ (residue in water wash) mg-PM residue | 0.000 | 0.000 | 0.000 | -- |
| $m_w$ (B½ particulate matter catch - water fraction), mg | 220.33 | 149.11 | 175.77 | 181.74 |
| $m_w$ (B½ particulate matter catch - water rinse corrected), mg | 220.33 | 149.11 | 175.77 | 181.74 |
| $V_{baw}$ (volume of acetone wash used), ml-acetone | 146 | 142 | 148 | -- |
| $W_{ba}$ (residue in acetone wash) mg-PM residue | 0.000 | 0.000 | 0.000 | -- |
| $m_{ba}$ (B½ particulate matter catch - acetone fraction), mg | 20.01 | 17.18 | 17.22 | 18.14 |
| $m_{ba}$ (B½ particulate matter catch - acetone rinse corrected), mg | 20.01 | 17.18 | 17.22 | 18.14 |
| $V_{dw}$ (volume of dichloromethane wash used), ml-$MeCl_2$ | 150 | 150 | 150 | -- |
| $W_d$ (residue in $MeCl_2$ wash) mg-PM residue | 0.000 | 0.000 | 0.000 | -- |
| $m_d$ (B½ particulate matter catch - $MeCl_2$ fraction), mg | 25.06 | 24.67 | 17.35 | 22.36 |
| $m_d$ (B½ particulate matter catch - $MeCl_2$ rinse corrected), mg | 25.06 | 24.67 | 17.35 | 22.36 |
| $m_{nb}$ (B½ particulate matter catch - combined), mg | 265.40 | 190.96 | 210.34 | 222.23 |
| $m_n$ (total particulate matter catch - combined), mg | 972.96 | 1164.92 | 1178.19 | 1105.36 |
| **OREGON DEQ ANALYTICAL DETECTION LIMIT** | | | | |
| $m_n$ (particulate matter catch - ADL), mg | 7.00 | 7.00 | 7.00 | 7.00 |
| $m_n$ (particulate matter catch - REPORTING), mg | 972.96 | 1164.92 | 1178.19 | 1105.36 |

# Appendix A.10
# PCDD/PCDF Calculations/Results

# SOURCE TEST DATA SUMMARY

| | | | | | | |
|---|---|---|---|---|---|---|
| | Client | | | | | Oregon DEQ |
| | Unit / Location | | | | | ACI |
| | Stack area, square feet | | | | | 0.785 |
| | Regulation District | | | | | Oregon DEQ |
| | Reference temperature, °F | | | | | 68 |
| | Reference pressure, psi | | | | | 14.7 |
| | Test number | | Field Blank | 1-PCDD | 2-PCDD | 3-PCDD | Average |
| | Date | | -- | 5/23/2023 | 5/23/2023 | 5/24/2023 | -- |
| | Start / Stop time | | -- | 0950-1250 | 1410-1710 | 0925-1225 | -- |
| | **FUEL DATA** | | | | | | |
| | Fuel "F" factor @ $T_{ref}$, dscf/MMBtu | | -- | 9778 | 9778 | 9960 | 9,839 |
| | Wood processed, tons/hr | | -- | 0.847 | 0.590 | 0.910 | 0.782 |
| | lb/ton wood processed | | | | | | |
| | **SAMPLE TRAIN DATA** | | | | | | |
| | Meter box number/ID | | -- | MB 30 | MB 30 | MB 30 | -- |
| | Nozzle diameter, inches | | -- | 0.170 | 0.170 | 0.170 | 0.170 |
| | Sample time, minutes | | -- | 180.0 | 180.0 | 180.0 | 180.0 |
| | Pitot coefficient | | -- | 0.84 | 0.84 | 0.84 | 0.84 |
| | Meter calibration, Yd | | -- | 0.980 | 0.980 | 0.980 | 0.980 |
| | Barometric pressure, in Hg | | -- | 29.96 | 29.96 | 29.88 | 29.93 |
| | Meter box volume, acf | | -- | 104.530 | 95.170 | 102.188 | 100.629 |
| | Impinger liquid mass, g | | -- | 179.6 | 149.3 | 208.8 | 179.2 |
| | Meter temperature, °F | | -- | 77.8 | 95.3 | 82.7 | 85.3 |
| | Meter pressure, (Delta H) iwg | | -- | 1.093 | 0.832 | 0.945 | 0.956 |
| | Velocity head, (Delta P) iwg | | -- | 3.045 | 2.533 | 3.248 | 2.942 |
| | Static pressure, iwg | | -- | -7.00 | -7.00 | -5.50 | -6.50 |
| | Stack temperature, °F | | -- | 812.2 | 888.2 | 939.3 | 879.9 |
| | **ANALYZER DATA** | | | | | | |
| | $O_2$, % volume dry | | -- | 16.63 | 16.19 | 15.84 | 16.22 |
| | $CO_2$, % volume dry | | -- | 4.18 | 4.57 | 5.00 | 4.58 |
| | **VOLUMETRIC FLOW RATE** | | | | | | |
| 1a | Standard sample volume, dscf | | -- | 100.997 | 88.98 | 97.54 | 95.842 |
| 1b | Water vapor volume, scf | | -- | 8.468 | 7.039 | 9.845 | 8.451 |
| | $B_{ws}$ (moisture fraction), non-dimensional | | -- | 0.0774 | 0.0733 | 0.0917 | 0.0808 |
| | $B_{ws}$ (moisture fraction saturated), non-dimensional | | -- | NA | NA | NA | NA |
| 1c | $B_{ws}$ (moisture fraction applicable), non-dimensional | | -- | 0.0774 | 0.0733 | 0.0917 | 0.0808 |
| 1d | Stack gas molecular weight, dry | | -- | 29.334 | 29.379 | 29.433 | 29.382 |
| 1e | Stack gas molecular weight, wet | | -- | 28.457 | 28.544 | 28.385 | 28.462 |
| 1f | Absolute stack pressure, in Hg | | -- | 29.445 | 29.445 | 29.476 | 29.455 |
| 1g | Stack gas velocity, ft/sec | | -- | 154.40 | 144.75 | 167.37 | 155.51 |
| 1h | Q (stack flow rate), acf/min | | -- | 7,276 | 6,821 | 7,887 | 7,328 |
| 1i | $Q_{sw}$ (stack flow rate), wscf/min | | -- | 2,972 | 2,629 | 2,932 | 2,844 |
| 1j | $Q_{sd}$ (stack flow rate, based on pitot), dscf/min | | -- | 2,742 | 2,436 | 2,663 | 2,614 |
| | Qsd (stack flow rate, based on pitot), dscf/min | | -- | 2,742 | 2,436 | 2,663 | 2,614 |
| | Isokinetic Ratio (%) | | -- | 102.0 | 101.1 | 101.4 | 101.5 |
| | **LAB RESULTS** | | | | | | |
| | Total PCDD/PCDF TEQ (WTEQ, ND=0, EPMC=EMPC) | | 0.331 | 408 | 641 | 748 | 599 |
| | 2378-Cl4-Dibenzo-p-dioxin, pg | < | 0.967 | 107 | 52.9 | 166 | 108.6 |
| | 12378-Cl5-Dibenzo-p-dioxin, pg | < | 1.15 | 62.1 | 53.3 | 114 | 76.47 |
| | 123478-Cl6-Dibenzo-p-dioxin, pg | | 3.28 | 44.6 | 20.6 | 53.3 | 39.50 |
| | 123678-Cl6-Dibenzo-p-dioxin, pg | < | 1.92 | 66.2 | 21.5 | 66.6 | 51.43 |
| | 123789-Cl6-Dibenzo-p-dioxin, pg | < | 1.79 | 64.8 | 21.1 | 63.9 | 49.93 |
| | 1234678-Cl7-Dibenzo-p-dioxin, pg | < | 1.46 | 1050 | 132 | 1070 | 750.7 |
| | 12346789-Cl8-Dibenzo-p-dioxin, pg | < | 8.54 | 5070 | 559 | 4970 | 3,533 |
| | 2378-Cl4-Dibenzofuran, pg | < | 1.05 | 1060 | 653 | 1690 | 1,134 |
| | 12378-Cl5-Dibenzofuran, pg | < | 0.770 | 223 | 243 | 472 | 312.7 |
| | 23478-Cl5-Dibenzofuran, pg | < | 0.844 | 267 | 384 | 695 | 448.7 |
| | 123478-Cl6-Dibenzofuran, pg | < | 0.959 | 45.0 | 99.4 | 127 | 90.47 |
| | 123678-Cl6-Dibenzofuran, pg | < | 0.924 | 49.2 | 115 | 137 | 100.4 |
| | 234678-Cl6-Dibenzofuran, pg | < | 1.02 | 45.6 | 127 | 135 | 102.5 |
| | 123789-Cl6-Dibenzofuran, pg | < | 1.18 | 17.4 | 41.0 | 40.2 | 32.87 |
| | 1234678-Cl7-Dibenzofuran, pg | < | 1.13 | 60.1 | 94.9 | 129 | 94.67 |
| | 1234789-Cl7-Dibenzofuran, pg | < | 1.31 | 27.0 | 21.3 | 34.6 | 27.63 |
| | 12346789-Cl8-Dibenzofuran, pg | < | 1.93 | 149 | 38.8 | 150 | 112.6 |
| | Total Cl4-Dibenzo-p-dioxins, pg | < | 0.967 | 826 | 607 | 1550 | 994.3 |
| | Total Cl5-Dibenzo-p-dioxins, pg | < | 1.15 | 458 | 372 | 734 | 521.3 |
| | Total Cl6-Dibenzo-p-dioxins, pg | | 3.28 | 739 | 235 | 781 | 585.0 |
| | Total Cl7-Dibenzo-p-dioxins, pg | | 3.14 | 1950 | 239 | 1960 | 1,383 |
| | Total Cl8-Dibenzo-p-dioxins, pg | | 8.54 | 5070 | 559 | 4970 | 3,533 |
| | Total Cl4-Dibenzofurans, pg | < | 1.050 | 15200 | 11500 | 28300 | 18,333 |
| | Total Cl5-Dibenzofurans, pg | < | 0.807 | 2550 | 3550 | 6190 | 4,097 |
| | Total Cl6-Dibenzofurans, pg | < | 1.02 | 401 | 938 | 1110 | 816.3 |
| | Total Cl7-Dibenzofurans, pg | < | 1.22 | 178 | 179 | 274 | 210.3 |
| | Total C18-Dibenzofurans, pg | < | 1.93 | 149 | 38.8 | 150 | 112.6 |

# SOURCE TEST DATA SUMMARY

| | |
|---|---|
| Client | Oregon DEQ |
| Unit / Location | ACI |
| Stack area, square feet | 0.785 |
| Regulation District | Oregon DEQ |
| Reference temperature, °F | 68 |
| Reference pressure, psi | 14.7 |

| | | Field Blank | 1-PCDD | 2-PCDD | 3-PCDD | Average |
|---|---|---|---|---|---|---|
| Test number | | | | | | |
| Date | | -- | 5/23/2023 | 5/23/2023 | 5/24/2023 | -- |
| Start / Stop time | | -- | 0950-1250 | 1410-1710 | 0925-1225 | -- |
| **EMISSIONS** | | | | | | |
| **2378-Cl4-Dibenzo-p-dioxin(2378 TCDD), pg/m³** | < | 0.36 | 37.41 | 20.99 | 60.1 | 39.5 |
| 2378-Cl4-Dibenzo-p-dioxin(2378 TCDD), ng/m³ | < | 3.56E-04 | 3.74E-02 | 2.10E-02 | 6.01E-02 | 3.95E-02 |
| 2378-Cl4-Dibenzo-p-dioxin(2378 TCDD), lb/hr | < | 3.49E-12 | 3.84E-10 | 1.91E-10 | 5.99E-10 | 3.91E-10 |
| 2378-Cl4-Dibenzo-p-dioxin(2378 TCDD), lb/MMBtu | < | 9.77E-13 | 1.12E-10 | 5.69E-11 | 1.54E-10 | 1.08E-10 |
| 2378-Cl4-Dibenzo-p-dioxin(2378 TCDD), lb/ton wood processed | < | 4.46E-12 | 4.53E-10 | 3.24E-10 | 6.58E-10 | 4.79E-10 |
| **12378-Cl5-Dibenzo-p-dioxin(12378 PeCDD), pg/m³** | < | 0.42 | 21.71 | 21.15 | 41.27 | 28.05 |
| 12378-Cl5-Dibenzo-p-dioxin(12378 PeCDD), ng/m³ | < | 4.24E-04 | 2.17E-02 | 2.12E-02 | 4.13E-02 | 2.80E-02 |
| 12378-Cl5-Dibenzo-p-dioxin(12378 PeCDD), lb/hr | < | 4.14E-12 | 2.23E-10 | 1.93E-10 | 4.11E-10 | 2.76E-10 |
| 12378-Cl5-Dibenzo-p-dioxin(12378 PeCDD), lb/MMBtu | < | 1.16E-12 | 6.48E-11 | 5.73E-11 | 1.06E-10 | 7.60E-11 |
| 12378-Cl5-Dibenzo-p-dioxin(12378 PeCDD), lb/ton wood processed | < | 5.30E-12 | 2.63E-10 | 3.27E-10 | 4.52E-10 | 3.47E-10 |
| **123478-Cl6-Dibenzo-p-dioxin(123478 HxCDD), pg/m³** | | 1.21 | 15.59 | 8.18 | 19.3 | 14.36 |
| 123478-Cl6-Dibenzo-p-dioxin(123478 HxCDD), ng/m³ | | 1.21E-03 | 1.56E-02 | 8.18E-03 | 1.93E-02 | 1.44E-02 |
| 123478-Cl6-Dibenzo-p-dioxin(123478 HxCDD), lb/hr | | 1.18E-11 | 1.60E-10 | 7.45E-11 | 1.92E-10 | 1.42E-10 |
| 123478-Cl6-Dibenzo-p-dioxin(123478 HxCDD), lb/MMBtu | | 3.31E-12 | 4.65E-11 | 2.21E-11 | 4.96E-11 | 3.94E-11 |
| 123478-Cl6-Dibenzo-p-dioxin(123478 HxCDD), lb/ton wood processed | | 1.51E-11 | 1.89E-10 | 1.26E-10 | 2.11E-10 | 1.76E-10 |
| **123678-Cl6-Dibenzo-p-dioxin(123678 HxCDD), pg/m³** | < | 0.71 | 23.15 | 8.53 | 24.11 | 18.6 |
| 123678-Cl6-Dibenzo-p-dioxin(123678 HxCDD), ng/m³ | < | 7.07E-04 | 2.31E-02 | 8.53E-03 | 2.41E-02 | 1.86E-02 |
| 123678-Cl6-Dibenzo-p-dioxin(123678 HxCDD), lb/hr | < | 6.92E-12 | 2.38E-10 | 7.78E-11 | 2.40E-10 | 1.85E-10 |
| 123678-Cl6-Dibenzo-p-dioxin(123678 HxCDD), lb/MMBtu | < | 1.94E-12 | 6.91E-11 | 2.31E-11 | 6.19E-11 | 5.14E-11 |
| 123678-Cl6-Dibenzo-p-dioxin(123678 HxCDD), lb/ton wood processed | < | 8.85E-12 | 2.81E-10 | 1.32E-10 | 2.64E-10 | 2.25E-10 |
| **123789-Cl6-Dibenzo-p-dioxin(123789 HxCDD), pg/m³** | < | 0.66 | 22.66 | 8.37 | 23.13 | 18.06 |
| 123789-Cl6-Dibenzo-p-dioxin(123789 HxCDD), ng/m³ | < | 6.60E-04 | 2.27E-02 | 8.37E-03 | 2.31E-02 | 1.81E-02 |
| 123789-Cl6-Dibenzo-p-dioxin(123789 HxCDD), lb/hr | < | 6.45E-12 | 2.32E-10 | 7.63E-11 | 2.31E-10 | 1.80E-10 |
| 123789-Cl6-Dibenzo-p-dioxin(123789 HxCDD), lb/MMBtu | < | 1.81E-12 | 6.76E-11 | 2.27E-11 | 5.94E-11 | 4.99E-11 |
| 123789-Cl6-Dibenzo-p-dioxin(123789 HxCDD), lb/ton wood processed | < | 8.25E-12 | 2.75E-10 | 1.29E-10 | 2.53E-10 | 2.19E-10 |
| **1234678-Cl7-Dibenzo-p-dioxin(1234678 HpCDD), pg/m³** | < | 0.54 | 367.14 | 52.39 | 387.38 | 268.97 |
| 1234678-Cl7-Dibenzo-p-dioxin(1234678 HpCDD), ng/m³ | < | 5.38E-04 | 3.67E-01 | 5.24E-02 | 3.87E-01 | 2.69E-01 |
| 1234678-Cl7-Dibenzo-p-dioxin(1234678 HpCDD), lb/hr | < | 5.26E-12 | 3.77E-09 | 4.78E-10 | 3.86E-09 | 2.70E-09 |
| 1234678-Cl7-Dibenzo-p-dioxin(1234678 HpCDD), lb/MMBtu | < | 1.47E-12 | 1.10E-09 | 1.42E-10 | 9.95E-10 | 7.44E-10 |
| 1234678-Cl7-Dibenzo-p-dioxin(1234678 HpCDD), lb/ton wood processed | < | 6.73E-12 | 4.45E-09 | 8.10E-10 | 4.24E-09 | 3.17E-09 |
| **12346789-Cl8-Dibenzo-p-dioxin(OCDD), pg/m³** | < | 3.15 | 1772.78 | 221.85 | 1799.34 | 1264.66 |
| 12346789-Cl8-Dibenzo-p-dioxin(OCDD), ng/m³ | < | 3.15E-03 | 1.77E+00 | 2.22E-01 | 1.80E+00 | 1.26E+00 |
| 12346789-Cl8-Dibenzo-p-dioxin(OCDD), lb/hr | < | 3.08E-11 | 1.82E-08 | 2.02E-09 | 1.79E-08 | 1.27E-08 |
| 12346789-Cl8-Dibenzo-p-dioxin(OCDD), lb/MMBtu | < | 8.63E-12 | 5.29E-09 | 6.01E-10 | 4.62E-09 | 3.50E-09 |
| 12346789-Cl8-Dibenzo-p-dioxin(OCDD), lb/ton wood processed | < | 3.93E-11 | 2.15E-08 | 3.43E-09 | 1.97E-08 | 1.49E-08 |
| **2378-Cl4-Dibenzofuran(2378 TCDF), pg/m³** | < | 0.39 | 370.64 | 259.15 | 611.85 | 413.88 |
| 2378-Cl4-Dibenzofuran(2378 TCDF), ng/m³ | < | 3.87E-04 | 3.71E-01 | 2.59E-01 | 6.12E-01 | 4.14E-01 |
| 2378-Cl4-Dibenzofuran(2378 TCDF), lb/hr | < | 3.78E-12 | 3.80E-09 | 2.36E-09 | 6.10E-09 | 4.09E-09 |
| 2378-Cl4-Dibenzofuran(2378 TCDF), lb/MMBtu | < | 1.06E-12 | 1.11E-09 | 7.02E-10 | 1.57E-09 | 1.13E-09 |
| 2378-Cl4-Dibenzofuran(2378 TCDF), lb/ton wood processed | < | 4.84E-12 | 4.49E-09 | 4.00E-09 | 6.70E-09 | 5.07E-09 |
| **12378-Cl5-Dibenzofuran(12378 PeCDF), pg/m³** | < | 0.28 | 77.97 | 96.44 | 170.88 | 115.1 |
| 12378-Cl5-Dibenzofuran(12378 PeCDF), ng/m³ | < | 2.84E-04 | 7.80E-02 | 9.64E-02 | 1.71E-01 | 1.15E-01 |
| 12378-Cl5-Dibenzofuran(12378 PeCDF), lb/hr | < | 2.78E-12 | 8.00E-10 | 8.79E-10 | 1.70E-09 | 1.13E-09 |
| 12378-Cl5-Dibenzofuran(12378 PeCDF), lb/MMBtu | < | 7.78E-13 | 2.33E-10 | 2.61E-10 | 4.39E-10 | 3.11E-10 |
| 12378-Cl5-Dibenzofuran(12378 PeCDF), lb/ton wood processed | < | 3.55E-12 | 9.45E-10 | 1.49E-09 | 1.87E-09 | 1.44E-09 |
| **23478-Cl5-Dibenzofuran(23478 PeCDF), pg/m³** | < | 0.31 | 93.36 | 152.39 | 251.62 | 165.79 |
| 23478-Cl5-Dibenzofuran(23478 PeCDF), ng/m³ | < | 3.11E-04 | 9.34E-02 | 1.52E-01 | 2.52E-01 | 1.66E-01 |
| 23478-Cl5-Dibenzofuran(23478 PeCDF), lb/hr | < | 3.04E-12 | 9.58E-10 | 1.39E-09 | 2.51E-09 | 1.62E-09 |
| 23478-Cl5-Dibenzofuran(23478 PeCDF), lb/MMBtu | < | 8.53E-13 | 2.79E-10 | 4.13E-10 | 6.46E-10 | 4.46E-10 |
| 23478-Cl5-Dibenzofuran(23478 PeCDF), lb/ton wood processed | < | 3.89E-12 | 1.13E-09 | 2.36E-09 | 2.76E-09 | 2.08E-09 |
| **123478-Cl6-Dibenzofuran(123478 HxCDF), pg/m³** | < | 0.35 | 15.73 | 39.45 | 45.98 | 33.72 |
| 123478-Cl6-Dibenzofuran(123478 HxCDF), ng/m³ | < | 3.53E-04 | 1.57E-02 | 3.94E-02 | 4.60E-02 | 3.37E-02 |
| 123478-Cl6-Dibenzofuran(123478 HxCDF), lb/hr | < | 3.46E-12 | 1.61E-10 | 3.60E-10 | 4.58E-10 | 3.26E-10 |
| 123478-Cl6-Dibenzofuran(123478 HxCDF), lb/MMBtu | < | 9.69E-13 | 4.69E-11 | 1.07E-10 | 1.18E-10 | 9.06E-11 |
| 123478-Cl6-Dibenzofuran(123478 HxCDF), lb/ton wood processed | < | 4.42E-12 | 1.91E-10 | 6.10E-10 | 5.04E-10 | 4.35E-10 |
| **123678-Cl6-Dibenzofuran(123678 HxCDF), pg/m³** | < | 0.34 | 17.2 | 45.64 | 49.6 | 37.48 |
| 123678-Cl6-Dibenzofuran(123678 HxCDF), ng/m³ | < | 3.40E-04 | 1.72E-02 | 4.56E-02 | 4.96E-02 | 3.75E-02 |
| 123678-Cl6-Dibenzofuran(123678 HxCDF), lb/hr | < | 3.33E-12 | 1.77E-10 | 4.16E-10 | 4.94E-10 | 3.62E-10 |
| 123678-Cl6-Dibenzofuran(123678 HxCDF), lb/MMBtu | < | 9.33E-13 | 5.13E-11 | 1.24E-10 | 1.27E-10 | 1.01E-10 |
| 123678-Cl6-Dibenzofuran(123678 HxCDF), lb/ton wood processed | < | 4.26E-12 | 2.08E-10 | 7.05E-10 | 5.43E-10 | 4.86E-10 |
| **234678-Cl6-Dibenzofuran(234678 HxCDF), pg/m³** | < | 0.38 | 15.94 | 50.4 | 48.88 | 38.41 |
| 234678-Cl6-Dibenzofuran(234678 HxCDF), ng/m³ | < | 3.76E-04 | 1.59E-02 | 5.04E-02 | 4.89E-02 | 3.84E-02 |
| 234678-Cl6-Dibenzofuran(234678 HxCDF), lb/hr | < | 3.68E-12 | 1.64E-10 | 4.60E-10 | 4.87E-10 | 3.70E-10 |
| 234678-Cl6-Dibenzofuran(234678 HxCDF), lb/MMBtu | < | 1.03E-12 | 4.76E-11 | 1.36E-10 | 1.26E-10 | 1.03E-10 |
| 234678-Cl6-Dibenzofuran(234678 HxCDF), lb/ton wood processed | < | 4.70E-12 | 1.93E-10 | 7.79E-10 | 5.35E-10 | 5.02E-10 |

# SOURCE TEST DATA SUMMARY

| | |
|---|---|
| Client | Oregon DEQ |
| Unit / Location | ACI |
| Stack area, square feet | 0.785 |
| Regulation District | Oregon DEQ |
| Reference temperature, °F | 68 |
| Reference pressure, psi | 14.7 |

| | | | | | | |
|---|---|---|---|---|---|---|
| Test number | | Field Blank | 1-PCDD | 2-PCDD | 3-PCDD | Average |
| Date | | -- | 5/23/2023 | 5/23/2023 | 5/24/2023 | -- |
| Start / Stop time | | -- | 0950-1250 | 1410-1710 | 0925-1225 | -- |
| **123789-Cl6-Dibenzofuran(123789 HxCDF), pg/m³** | < | 0.43 | 6.08 | 16.27 | 14.55 | 12.3 |
| 123789-Cl6-Dibenzofuran(123789 HxCDF), ng/m³ | < | 4.35E-04 | 6.08E-03 | 1.63E-02 | 1.46E-02 | 1.23E-02 |
| 123789-Cl6-Dibenzofuran(123789 HxCDF), lb/hr | < | 4.25E-12 | 6.24E-11 | 1.48E-10 | 1.45E-10 | 1.19E-10 |
| 123789-Cl6-Dibenzofuran(123789 HxCDF), lb/MMBtu | < | 1.19E-12 | 1.82E-11 | 4.41E-11 | 3.74E-11 | 3.32E-11 |
| 123789-Cl6-Dibenzofuran(123789 HxCDF), lb/ton wood processed | < | 5.44E-12 | 7.37E-11 | 2.51E-10 | 1.59E-10 | 1.62E-10 |
| **1234678-Cl7-Dibenzofuran(1234678 HpCDF), pg/m³** | < | 0.42 | 21.01 | 37.66 | 46.7 | 35.13 |
| 1234678-Cl7-Dibenzofuran(1234678 HpCDF), ng/m³ | < | 4.16E-04 | 2.10E-02 | 3.77E-02 | 4.67E-02 | 3.51E-02 |
| 1234678-Cl7-Dibenzofuran(1234678 HpCDF),lb/hr | < | 4.07E-12 | 2.16E-10 | 3.43E-10 | 4.65E-10 | 3.41E-10 |
| 1234678-Cl7-Dibenzofuran(1234678 HpCDF), lb/MMBtu | < | 1.14E-12 | 6.27E-11 | 1.02E-10 | 1.20E-10 | 9.49E-11 |
| 1234678-Cl7-Dibenzofuran(1234678 HpCDF), lb/ton wood processed | < | 5.21E-12 | 2.55E-10 | 5.82E-10 | 5.11E-10 | 4.49E-10 |
| **1234789-Cl7-Dibenzofuran(1234789 HpCDF), pg/m³** | < | 0.48 | 9.44 | 8.45 | 12.53 | 10.14 |
| 1234789-Cl7-Dibenzofuran(1234789 HpCDF), ng/m³ | < | 4.83E-04 | 9.44E-03 | 8.45E-03 | 1.25E-02 | 1.01E-02 |
| 1234789-Cl7-Dibenzofuran(1234789 HpCDF), lb/hr | < | 4.72E-12 | 9.69E-11 | 7.71E-11 | 1.25E-10 | 9.96E-11 |
| 1234789-Cl7-Dibenzofuran(1234789 HpCDF), lb/MMBtu | < | 1.32E-12 | 2.82E-11 | 2.29E-11 | 3.22E-11 | 2.77E-11 |
| 1234789-Cl7-Dibenzofuran(1234789 HpCDF), lb/ton wood processed | < | 6.04E-12 | 1.14E-10 | 1.31E-10 | 1.37E-10 | 1.27E-10 |
| **12346789-Cl8-Dibenzofuran(OCDF), pg/m³** | < | 0.71 | 52.1 | 15.4 | 54.31 | 40.6 |
| 12346789-Cl8-Dibenzofuran(OCDF), ng/m³ | < | 7.11E-04 | 5.21E-02 | 1.54E-02 | 5.43E-02 | 4.06E-02 |
| 12346789-Cl8-Dibenzofuran(OCDF), lb/hr | < | 6.96E-12 | 5.35E-10 | 1.40E-10 | 5.41E-10 | 4.05E-10 |
| 12346789-Cl8-Dibenzofuran(OCDF), lb/MMBtu | < | 1.95E-12 | 1.55E-10 | 4.17E-11 | 1.39E-10 | 1.12E-10 |
| 12346789-Cl8-Dibenzofuran(OCDF), lb/ton wood processed | < | 8.89E-12 | 6.31E-10 | 2.38E-10 | 5.95E-10 | 4.88E-10 |
| **Total Cl4-Dibenzo-p-dioxins(TCDD), pg/m³** | < | 0.36 | 288.82 | 240.9 | 561.16 | 363.63 |
| Total Cl4-Dibenzo-p-dioxins(TCDD), ng/m³ | < | 3.56E-04 | 2.89E-01 | 2.41E-01 | 5.61E-01 | 3.64E-01 |
| Total Cl4-Dibenzo-p-dioxins(TCDD), lb/hr | < | 3.49E-12 | 2.96E-09 | 2.20E-09 | 5.59E-09 | 3.58E-09 |
| Total Cl4-Dibenzo-p-dioxins(TCDD), lb/MMBtu | < | 9.77E-13 | 8.62E-10 | 6.52E-10 | 1.44E-09 | 9.85E-10 |
| Total Cl4-Dibenzo-p-dioxins(TCDD), lb/ton wood processed | < | 4.46E-12 | 3.50E-09 | 3.72E-09 | 6.15E-09 | 4.46E-09 |
| **Total Cl5-Dibenzo-p-dioxins(PeCDD), pg/m³** | < | 0.42 | 160.14 | 147.63 | 265.74 | 191.17 |
| Total Cl5-Dibenzo-p-dioxins(PeCDD), ng/m³ | < | 4.24E-04 | 1.60E-01 | 1.48E-01 | 2.66E-01 | 1.91E-01 |
| Total Cl5-Dibenzo-p-dioxins(PeCDD), lb/hr | < | 4.14E-12 | 1.64E-09 | 1.35E-09 | 2.65E-09 | 1.88E-09 |
| Total Cl5-Dibenzo-p-dioxins(PeCDD), lb/MMBtu | < | 1.16E-12 | 4.78E-10 | 4.00E-10 | 6.82E-10 | 5.20E-10 |
| Total Cl5-Dibenzo-p-dioxins(PeCDD), lb/ton wood processed | < | 5.30E-12 | 1.94E-09 | 2.28E-09 | 2.91E-09 | 2.38E-09 |
| **Total Cl6-Dibenzo-p-dioxins(HxCDD), pg/m³** | | 1.21 | 258.4 | 93.26 | 282.75 | 211.47 |
| Total Cl6-Dibenzo-p-dioxins(HxCDD), ng/m³ | | 1.21E-03 | 2.58E-01 | 9.33E-02 | 2.83E-01 | 2.11E-01 |
| Total Cl6-Dibenzo-p-dioxins(HxCDD), lb/hr | | 1.18E-11 | 2.65E-09 | 8.50E-10 | 2.82E-09 | 2.11E-09 |
| Total Cl6-Dibenzo-p-dioxins(HxCDD), lb/MMBtu | | 3.31E-12 | 7.71E-10 | 2.53E-10 | 7.26E-10 | 5.83E-10 |
| Total Cl6-Dibenzo-p-dioxins(HxCDD), lb/ton wood processed | | 1.51E-11 | 3.13E-09 | 1.44E-09 | 3.10E-09 | 2.56E-09 |
| **Total Cl7-Dibenzo-p-dioxins(HpCDD), pg/m³** | | 1.16 | 681.84 | 94.85 | 709.6 | 495.43 |
| Total Cl7-Dibenzo-p-dioxins(HpCDD), ng/m³ | | 1.16E-03 | 6.82E-01 | 9.48E-02 | 7.10E-01 | 4.95E-01 |
| Total Cl7-Dibenzo-p-dioxins(HxCDD), lb/hr | | 1.13E-11 | 7.00E-09 | 8.65E-10 | 7.07E-09 | 4.98E-09 |
| Total Cl7-Dibenzo-p-dioxins(HxCDD), lb/MMBtu | | 3.17E-12 | 2.03E-09 | 2.57E-10 | 1.82E-09 | 1.37E-09 |
| Total Cl7-Dibenzo-p-dioxins(HxCDD), lb/ton wood processed | | 1.45E-11 | 8.26E-09 | 1.47E-09 | 7.77E-09 | 5.83E-09 |
| **Total Cl8-Dibenzo-p-dioxins(OCDD), pg/m³** | | 3.15 | 1772.78 | 221.85 | 1799.34 | 1264.66 |
| Total Cl8-Dibenzo-p-dioxins(OCDD), ng/m³ | | 3.15E-03 | 1.77E+00 | 2.22E-01 | 1.80E+00 | 1.26E+00 |
| Total Cl8-Dibenzo-p-dioxins(OCDD), lb/hr | | 3.08E-11 | 1.82E-08 | 2.02E-09 | 1.79E-08 | 1.27E-08 |
| Total Cl8-Dibenzo-p-dioxins(OCDD), lb/MMBtu | | 8.63E-12 | 5.29E-09 | 6.01E-10 | 4.62E-09 | 3.50E-09 |
| Total Cl8-Dibenzo-p-dioxins(OCDD), lb/ton wood processed | | 3.93E-11 | 2.15E-08 | 3.43E-09 | 1.97E-08 | 1.49E-08 |
| **Total Cl4-Dibenzofurans(TCDF), pg/m³** | < | 0.39 | 5314.85 | 4563.91 | 10245.73 | 6708.17 |
| Total Cl4-Dibenzofurans(TCDF), ng/m³ | < | 3.87E-04 | 5.31E+00 | 4.56E+00 | 1.02E+01 | 6.71E+00 |
| Total Cl4-Dibenzofurans(TCDF), lb/hr | < | 3.78E-12 | 5.45E-08 | 4.16E-08 | 1.02E-07 | 6.61E-08 |
| Total Cl4-Dibenzofurans(TCDF), lb/MMBtu | < | 1.06E-12 | 1.59E-08 | 1.24E-08 | 2.63E-08 | 1.82E-08 |
| Total Cl4-Dibenzofurans(TCDF), lb/ton wood processed | < | 4.84E-12 | 6.44E-08 | 7.05E-08 | 1.12E-07 | 8.24E-08 |
| **Total Cl5-Dibenzofurans(PeCDF), pg/m³** | < | 0.3 | 891.64 | 1408.86 | 2241.03 | 1513.84 |
| Total Cl5-Dibenzofurans(PeCDF), ng/m³ | < | 2.97E-04 | 8.92E-01 | 1.41E+00 | 2.24E+00 | 1.51E+00 |
| Total Cl5-Dibenzofurans(PeCDF), lb/hr | < | 2.91E-12 | 9.15E-09 | 1.28E-08 | 2.23E-08 | 1.48E-08 |
| Total Cl5-Dibenzofurans(PeCDF), lb/MMBtu | < | 8.15E-13 | 2.66E-09 | 3.82E-09 | 5.75E-09 | 4.08E-09 |
| Total Cl5-Dibenzofurans(PeCDF), lb/ton wood processed | < | 3.72E-12 | 1.08E-08 | 2.18E-08 | 2.45E-08 | 1.90E-08 |
| **Total Cl6-Dibenzofurans(HxCDF), pg/m³** | < | 0.38 | 140.21 | 372.26 | 401.86 | 304.78 |
| Total Cl6-Dibenzofurans(HxCDF), ng/m³ | < | 3.76E-04 | 1.40E-01 | 3.72E-01 | 4.02E-01 | 3.05E-01 |
| Total Cl6-Dibenzofurans(HxCDF), lb/hr | < | 3.68E-12 | 1.44E-09 | 3.39E-09 | 4.00E-09 | 2.95E-09 |
| Total Cl6-Dibenzofurans(HxCDF), lb/MMBtu | < | 1.03E-12 | 4.18E-10 | 1.01E-09 | 1.03E-09 | 8.19E-10 |
| Total Cl6-Dibenzofurans(HxCDF), lb/ton wood processed | < | 4.70E-12 | 1.70E-09 | 5.75E-09 | 4.40E-09 | 3.95E-09 |
| **Total Cl7-Dibenzofurans(HpCDF), pg/m³** | < | 0.45 | 62.24 | 71.04 | 99.2 | 77.49 |
| Total Cl7-Dibenzofurans(HpCDF), ng/m³ | < | 4.50E-04 | 6.22E-02 | 7.10E-02 | 9.92E-02 | 7.75E-02 |
| Total Cl7-Dibenzofurans(HpCDF), lb/hr | < | 4.40E-12 | 6.39E-10 | 6.48E-10 | 9.89E-10 | 7.58E-10 |
| Total Cl7-Dibenzofurans(HpCDF), lb/MMBtu | < | 1.23E-12 | 1.86E-10 | 1.92E-10 | 2.55E-10 | 2.11E-10 |
| Total Cl7-Dibenzofurans(HpCDF), lb/ton wood processed | < | 5.62E-12 | 7.54E-10 | 1.10E-09 | 1.09E-09 | 9.79E-10 |
| **Total C18-Dibenzofuran(OCDF), pg/m³** | < | 0.71 | 52.1 | 15.4 | 54.31 | 40.6 |
| Total Cl8-Dibenzofuran(OCDF), ng/m³ | < | 7.11E-04 | 5.21E-02 | 1.54E-02 | 5.43E-02 | 4.06E-02 |
| Total Cl8-Dibenzofuran(OCDF), lb/hr | < | 6.96E-12 | 5.35E-10 | 1.40E-10 | 5.41E-10 | 4.05E-10 |
| Total Cl8-Dibenzofuran(OCDF), lb/MMBtu | < | 1.95E-12 | 1.55E-10 | 4.17E-11 | 1.39E-10 | 1.12E-10 |
| Total Cl8-Dibenzofuran(OCDF), lb/ton wood processed | < | 8.89E-12 | 6.31E-10 | 2.38E-10 | 5.95E-10 | 4.88E-10 |
| **Total PCDD, pg/m³** | DLL | 6.29 | 3,162.0 | 798.5 | 3,618.6 | 2,526.4 |
| Total PCDD, ng/m³ | DLL | 6.29E-03 | 3.16 | 0.800 | 3.62 | 2.53 |
| Total PCDD, lb/hr | DLL | 6.15E-11 | 3.24E-08 | 7.28E-09 | 3.61E-08 | 2.53E-08 |
| Total PCDD, lb/MMBtu | DLL | 1.73E-11 | 9.43E-09 | 2.16E-09 | 9.29E-09 | 6.96E-09 |
| Total PCDD, lb/ton wood processed | DLL | 7.87E-11 | 3.83E-08 | 1.23E-08 | 3.96E-08 | 3.01E-08 |
| **Total PCDF, pg/m³** | BDL | 2.22 | 6,461.0 | 6,431.5 | 13,042.1 | 8,644.9 |
| Total PCDF, ng/m³ | BDL | 2.22E-03 | 6.46 | 6.43 | 13.04 | 8.64 |
| Total PCDF, lb/hr | BDL | 2.17E-11 | 6.63E-08 | 5.86E-08 | 1.30E-07 | 8.50E-08 |
| Total PCDF, lb/MMBtu | BDL | 6.09E-12 | 1.93E-08 | 1.74E-08 | 3.35E-08 | 2.34E-08 |
| Total PCDF, lb/ton wood processed | BDL | 2.78E-11 | 7.83E-08 | 9.94E-08 | 1.43E-07 | 1.07E-07 |
| **Total PCDD/PCDF, pg/m³ WTEQ (ND=0, EMPC=EMPC)** | DLL | 0.120 | 142.66 | 254.39 | 270.81 | 222.62 |
| Total PCDD/PCDF, ng/m³ | DLL | 1.22E-04 | 1.43E-01 | 2.54E-01 | 2.71E-01 | 2.23E-01 |
| Total PCDD/PCDF, lb/hr | DLL | 1.19E-12 | 1.46E-09 | 2.32E-09 | 2.70E-09 | 2.16E-09 |
| Total PCDD/PCDF, lb/MMBtu | DLL | 3.34E-13 | 4.26E-10 | 6.89E-10 | 6.95E-10 | 6.03E-10 |
| Total PCDD/PCDF, lb/ton wood processed | DLL | 1.53E-12 | 1.73E-09 | 3.93E-09 | 2.97E-09 | 2.88E-09 |

# Appendix A.11
# PAH Calculations/Results

# SOURCE TEST DATA SUMMARY

| | | | | | | |
|---|---|---|---|---|---|---|
| | Client | | | | | Oregon DEQ |
| | Unit / Location | | | | | ACI |
| | A (stack area), $ft^2$ | | | | | 0.785 |
| | $T_{ref}$ (reference temperature), °F | | | | | 68 |
| | $F_d$ (fuel "F" factor @ $T_{ref}$), dscf/MMBtu | | 9,778 | 9,778 | 9,960 | 9,839 |
| | Wood feed rate, tons/hr | | 0.847 | 0.590 | 0.910 | 0.782 |
| | Test number | Field Blank | Run 1 | Run 2 | Run 3 | Average |
| | Date | -- | 5/23/2023 | 5/23/2023 | 5/24/2023 | -- |
| | Start / Stop time | -- | 0950-1250 | 1410-1710 | 0925-1225 | -- |
| | Meter box number | -- | MB 24 | MB 24 | MB 24 | -- |
| | $C_p$ (pitot coefficient), dimensionless | -- | 0.84 | 0.84 | 0.84 | 0.84 |
| | Y (meter calibration factor), dimensionless | -- | 0.9898 | 0.9898 | 0.9898 | 0.990 |
| | Θ (sample time), min | -- | 180 | 180 | 180 | 180.00 |
| | Nozzle diameter, in | -- | 0.148 | 0.181 | 0.181 | 0.170 |
| | $P_{bar}$ (barometric pressure), in Hg | -- | 29.96 | 29.96 | 29.88 | 29.93 |
| | $V_m$ (meter box volume), acf | -- | 82.278 | 110.667 | 120.970 | 104.638 |
| | $V_{lc}$ (impinger liquid volume), ml | -- | 142.7 | 166.5 | 252.7 | 187.3 |
| | $T_m$ (meter temperature), °F | -- | 79.3 | 94.9 | 82.1 | 85.4 |
| | ΔH (meter pressure), in. $H_2O$ | -- | 0.591 | 1.105 | 1.258 | 0.985 |
| | ΔP (velocity head), in. $H_2O$ | -- | 3.0526 | 2.7672 | 3.4795 | 3.0998 |
| | $P_g$ (static pressure), in. Hg | -- | -7.00 | -7.00 | -5.50 | -6.50 |
| | $T_s$ (stack temperature), °F | -- | 780.4 | 862.5 | 898.8 | 847.2 |
| | $\%O_2$ (oxygen stack gas), % volume dry | 16.22 | 16.63 | 16.19 | 15.84 | 16.22 |
| | $\%CO_2$ (carbon dioxide stack gas), % volume dry | 4.58 | 4.18 | 4.57 | 5.00 | 4.58 |
| 1a | $V_{m(std)}$ (standard sample volume), dscf | 100.480 | 79.962 | 104.647 | 116.830 | 100.480 |
| 1b | $V_{w(std)}$ (water vapor volume), scf | 8.831 | 6.728 | 7.850 | 11.915 | 8.831 |
| 1c | $B_{ws}$ (moisture fraction), non-dimensional | 0.08 | 0.0776 | 0.0698 | 0.0925 | 0.0800 |
| 1d | $MW_{dry}$ (stack gas molecular weight), dry | 29.382 | 29.334 | 29.379 | 29.433 | 29.382 |
| 1e | $MW_{wet}$ (stack gas molecular weight), wet | 28.47 | 28.454 | 28.585 | 28.375 | 28.471 |
| 1f | $P_s$ (absolute stack pressure), in Hg | 29.455 | 29.445 | 29.445 | 29.476 | 29.455 |
| 1g | $V_s$ (stack gas velocity), ft/sec | 157.71 | 152.662 | 149.741 | 170.735 | 157.713 |
| 1h | Q (stack flow rate), acfm | 7,432 | 7,194 | 7,056 | 8,046 | 7,432 |
| 1i | $Q_{ws}$ (stack flow rate), wscfm | 2,955 | 3,014 | 2,773 | 3,080 | 2,955 |
| 1j | $Q_{ds}$ (stack flow rate), dscfm | 2,718 | 2,780 | 2,579 | 2,795 | 2,718 |
| 1k | I (isokinetic ratio), % | -- | 105.1 | 99.1 | 102.1 | 102.1 |
| 1 | Naphthalene, ng | 1,360 | >1,040,000 | >648,000 | >540,000 | >742,667 |
| 2 | 2-Methylnaphthalene, ng | 51.1 | 190,000 | 163,000 | 243,000 | 198,667 |
| 4 | Acenaphthylene, ng | < 11.9 | 103,000 | 54,800 | 115,000 | 90,933 |
| 5 | Acenaphthene, ng | < 13.5 | 11,500 | 10,200 | 18,900 | 13,533 |
| 6 | Fluorene, ng | 43.0 | 111,000 | 56,400 | 119,000 | 95,467 |
| 7 | Phenanthrene, ng | 497 | 344,000 | 234,000 | 262,000 | 280,000 |
| 8 | Anthracene, ng | 69.7 | 44,300 | 17,400 | 34,400 | 32,033 |
| 9 | Fluoranthene, ng | 224 | 273,000 | 110,000 | 266,000 | 216,333 |
| 10 | Pyrene, ng | 338 | 71,300 | 49,900 | 72,000 | 64,400 |
| 11 | Benz(a)anthracene, ng | 98.5 | 15,000 | 8,350 | 33,100 | 18,817 |
| 12 | Chrysene, ng | 97.6 | 24,700 | 17,200 | 48,700 | 30,200 |
| 13 | Benzo(b)fluoranthene, ng | 166 | 28,500 | 17,400 | 53,900 | 33,267 |
| 14 | Benzo(k)fluoranthene, ng | 56.8 | 9,130 | 5,830 | 19,400 | 11,453 |
| 15 | Benzo(e)pyrene, ng | 97.9 | 12,800 | 8,290 | 23,800 | 14,963 |
| 16 | Benzo(a)pyrene, ng | 93.4 | 12,800 | 6,020 | 28,900 | 15,907 |
| 17 | Perylene, ng | < 39.1 | 1,080 | 395 | 2,690 | 1,388 |
| 18 | Indeno(1,2,3-cd)pyrene, ng | 115 | 8,720 | 8,260 | 23,200 | 13,393 |
| 19 | Dibenzo(a,h)anthracene, ng | < 35.5 | 873 | 775 | 2,600 | 1,416 |
| 20 | Benzo(g,h,i)perylene, ng | 239 | 13,000 | 9,180 | 29,700 | 17,293 |
| 1 | Naphthalene, ng/sampling train | 1360.0 | >1,040,000 | >648,000 | >540,000 | >742,667 |
| | Naphthalene, ng/dscm | 477.92 | >459,247 | >218,648 | >163,206 | >280,367 |
| | Naphthalene, lb/hr | 4.86E-06 | >4.78E-03 | >2.11E-03 | >1.71E-03 | >2.87E-03 |
| | Naphthalene, lb/MMBtu | 1.31E-06 | >1.37E-03 | >5.92E-04 | >4.19E-04 | >7.93E-04 |
| | Naphthalene, lb/ton wood fuel | | >5.64E-03 | >3.58E-03 | >1.88E-03 | >3.70E-03 |
| 2 | 2-Methylnaphthalene, ng/sampling train | 51.1 | 190,000 | 163,000 | 243,000 | 198,667 |
| | 2-Methylnaphthalene, ng/dscm | 17.96 | 83,901 | 54,999 | 73,443 | 70,781 |
| | 2-Methylnaphthalene, lb/hr | 1.83E-07 | 8.73E-04 | 5.31E-04 | 7.68E-04 | 7.24E-04 |
| | 2-Methylnaphthalene, lb/MMBtu | 4.92E-08 | 2.50E-04 | 1.49E-04 | 1.88E-04 | 1.96E-04 |
| | 2-Methylnaphthalene, lb/ton wood fuel | | 1.03E-03 | 9.00E-04 | 8.44E-04 | 9.25E-04 |
| 4 | Acenaphthylene, ng/sampling train | < 11.9 | 103,000 | 54,800 | 115,000 | 90,933 |
| | Acenaphthylene, ng/dscm | < 4.18 | 45,483 | 18,491 | 34,757 | 32,910 |
| | Acenaphthylene, lb/hr | < 4.25E-08 | 4.73E-04 | 1.78E-04 | 3.64E-04 | 3.38E-04 |
| | Acenaphthylene, lb/MMBtu | < 1.15E-08 | 1.36E-04 | 5.00E-05 | 8.92E-05 | 9.16E-05 |
| | Acenaphthylene, lb/ton wood fuel | | 5.59E-04 | 3.03E-04 | 4.00E-04 | 4.20E-04 |
| 5 | Acenaphthene, ng/sampling train | < 13.5 | 11,500 | 10,200 | 18,900 | 13,533 |
| | Acenaphthene, ng/dscm | < 4.74 | 5,078 | 3,442 | 5,712 | 4,744 |
| | Acenaphthene, lb/hr | < 4.83E-08 | 5.28E-05 | 3.32E-05 | 5.98E-05 | 4.86E-05 |
| | Acenaphthene, lb/MMBtu | < 1.30E-08 | 1.51E-05 | 9.32E-06 | 1.47E-05 | 1.30E-05 |
| | Acenaphthene, lb/ton wood fuel | | 6.24E-05 | 5.63E-05 | 6.57E-05 | 6.15E-05 |

## SOURCE TEST DATA SUMMARY

| | | | | | |
|---|---|---|---|---|---|
| Client | | | | | Oregon DEQ |
| Unit / Location | | | | | ACI |
| A (stack area), $ft^2$ | | | | | 0.785 |
| $T_{ref}$ (reference temperature), °F | | | | | 68 |
| $F_d$ (fuel "F" factor @ $T_{ref}$), dscf/MMBtu | | 9,778 | 9,778 | 9,960 | 9,839 |
| Wood feed rate, tons/hr | | 0.847 | 0.590 | 0.910 | 0.782 |
| Test number | | Field Blank | Run 1 | Run 2 | Run 3 | Average |
| Date | | -- | 5/23/2023 | 5/23/2023 | 5/24/2023 | -- |
| Start / Stop time | | -- | 0950-1250 | 1410-1710 | 0925-1225 | -- |
| 6 Fluorene, ng/sampling train | | 43.0 | 111,000 | 56,400 | 119,000 | 95,467 |
| Fluorene, ng/dscm | | 15.11 | 49,016 | 19,030 | 35,966 | 34,671 |
| Fluorene, lb/hr | | 1.54E-07 | 5.10E-04 | 1.84E-04 | 3.76E-04 | 3.57E-04 |
| Fluorene, lb/MMBtu | | 4.14E-08 | 1.46E-04 | 5.15E-05 | 9.23E-05 | 9.67E-05 |
| Fluorene, lb/ton wood fuel | | | 6.02E-04 | 3.11E-04 | 4.13E-04 | 4.42E-04 |
| 7 Phenanthrene, ng/sampling train | | 497.0 | 344,000 | 234,000 | 262,000 | 280,000 |
| Phenanthrene, ng/dscm | | 174.65 | 151,905 | 78,956 | 79,185 | 103,349 |
| Phenanthrene, lb/hr | | 1.78E-06 | 1.58E-03 | 7.62E-04 | 8.28E-04 | 1.06E-03 |
| Phenanthrene, lb/MMBtu | | 4.79E-07 | 4.53E-04 | 2.14E-04 | 2.03E-04 | 2.90E-04 |
| Phenanthrene, lb/ton wood fuel | | | 1.87E-03 | 1.29E-03 | 9.10E-04 | 1.36E-03 |
| 8 Anthracene, ng/sampling train | | 69.7 | 44,300 | 17,400 | 34,400 | 32,033 |
| Anthracene, ng/dscm | | 24.49 | 19,562 | 5,871 | 10,397 | 11,943 |
| Anthracene, lb/hr | | 2.49E-07 | 2.04E-04 | 5.67E-05 | 1.09E-04 | 1.23E-04 |
| Anthracene, lb/MMBtu | | 6.71E-08 | 5.83E-05 | 1.59E-05 | 2.67E-05 | 3.36E-05 |
| Anthracene, lb/ton wood fuel | | | 2.40E-04 | 9.61E-05 | 1.20E-04 | 1.52E-04 |
| 9 Fluoranthene, ng/sampling train | | 224.0 | 273,000 | 110,000 | 266,000 | 216,333 |
| Fluoranthene, ng/dscm | | 78.72 | 120,552 | 37,116 | 80,394 | 79,354 |
| Fluoranthene, lb/hr | | 8.01E-07 | 1.25E-03 | 3.58E-04 | 8.41E-04 | 8.18E-04 |
| Fluoranthene, lb/MMBtu | | 2.16E-07 | 3.59E-04 | 1.00E-04 | 2.06E-04 | 2.22E-04 |
| Fluoranthene, lb/ton wood fuel | | | 1.48E-03 | 6.07E-04 | 9.24E-04 | 1.00E-03 |
| 10 Pyrene, ng/sampling train | | 338.0 | 71,300 | 49,900 | 72,000 | 64,400 |
| Pyrene, ng/dscm | | 118.78 | 31,485 | 16,837 | 21,761 | 23,361 |
| Pyrene, lb/hr | | 1.21E-06 | 3.28E-04 | 1.63E-04 | 2.28E-04 | 2.39E-04 |
| Pyrene, lb/MMBtu | | 3.25E-07 | 9.39E-05 | 4.56E-05 | 5.58E-05 | 6.51E-05 |
| Pyrene, lb/ton wood fuel | | | 3.87E-04 | 2.75E-04 | 2.50E-04 | 3.04E-04 |
| 11 Benz(a)anthracene, ng/sampling train | | 98.5 | 15,000 | 8,350 | 33,100 | 18,817 |
| Benz(a)anthracene, ng/dscm | | 34.61 | 6,624 | 2,817 | 10,004 | 6,482 |
| Benz(a)anthracene, lb/hr | | 3.52E-07 | 6.89E-05 | 2.72E-05 | 1.05E-04 | 6.69E-05 |
| Benz(a)anthracene, lb/MMBtu | | 9.48E-08 | 1.98E-05 | 7.63E-06 | 2.57E-05 | 1.77E-05 |
| Benz(a)anthracene, lb/ton wood fuel | | | 8.14E-05 | 4.61E-05 | 1.15E-04 | 8.08E-05 |
| 12 Chrysene, ng/sampling train | | 97.6 | 24,700 | 17,200 | 48,700 | 30,200 |
| Chrysene, ng/dscm | | 34.30 | 10,907 | 5,804 | 14,719 | 10,477 |
| Chrysene, lb/hr | | 3.49E-07 | 1.13E-04 | 5.60E-05 | 1.54E-04 | 1.08E-04 |
| Chrysene, lb/MMBtu | | 9.40E-08 | 3.25E-05 | 1.57E-05 | 3.78E-05 | 2.87E-05 |
| Chrysene, lb/ton wood fuel | | | 1.34E-04 | 9.50E-05 | 1.69E-04 | 1.33E-04 |
| 13 Benzo(b)fluoranthene, ng/sampling train | | 166.0 | 28,500 | 17,400 | 53,900 | 33,267 |
| Benzo(b)fluoranthene, ng/dscm | | 58.33 | 12,585 | 5,871 | 16,290 | 11,582 |
| Benzo(b)fluoranthene, lb/hr | | 5.93E-07 | 1.31E-04 | 5.67E-05 | 1.70E-04 | 1.19E-04 |
| Benzo(b)fluoranthene, lb/MMBtu | | 1.60E-07 | 3.75E-05 | 1.59E-05 | 4.18E-05 | 3.17E-05 |
| Benzo(b)fluoranthene, lb/ton wood fuel | | | 1.55E-04 | 9.61E-05 | 1.87E-04 | 1.46E-04 |
| 14 Benzo(k)fluoranthene, ng/sampling train | | 56.8 | 9,130 | 5,830 | 19,400 | 11,453 |
| Benzo(k)fluoranthene, ng/dscm | | 19.96 | 4,032 | 1,967 | 5,863 | 3,954 |
| Benzo(k)fluoranthene, lb/hr | | 2.03E-07 | 4.19E-05 | 1.90E-05 | 6.13E-05 | 4.08E-05 |
| Benzo(k)fluoranthene, lb/MMBtu | | 5.47E-08 | 1.20E-05 | 5.32E-06 | 1.50E-05 | 1.08E-05 |
| Benzo(k)fluoranthene, lb/ton wood fuel | | | 4.95E-05 | 3.22E-05 | 6.74E-05 | 4.97E-05 |
| 15 Benzo(e)pyrene, ng/sampling train | | 97.9 | 12,800 | 8,290 | 23,800 | 14,963 |
| Benzo(e)pyrene, ng/dscm | | 34.40 | 5,652 | 2,797 | 7,193 | 5,214 |
| Benzo(e)pyrene, lb/hr | | 3.50E-07 | 5.88E-05 | 2.70E-05 | 7.52E-05 | 5.37E-05 |
| Benzo(e)pyrene, lb/MMBtu | | 9.43E-08 | 1.69E-05 | 7.57E-06 | 1.85E-05 | 1.43E-05 |
| Benzo(e)pyrene, lb/ton wood fuel | | | 6.95E-05 | 4.58E-05 | 8.27E-05 | 6.60E-05 |
| 16 Benzo(a)pyrene, ng/sampling train | | 93.4 | 12,800 | 6,020 | 28,900 | 15,907 |
| Benzo(a)pyrene, ng/dscm | | 32.82 | 5,652 | 2,031 | 8,735 | 5,473 |
| Benzo(a)pyrene, lb/hr | | 3.34E-07 | 5.88E-05 | 1.96E-05 | 9.14E-05 | 5.66E-05 |
| Benzo(a)pyrene, lb/MMBtu | | 8.99E-08 | 1.69E-05 | 5.50E-06 | 2.24E-05 | 1.49E-05 |
| Benzo(a)pyrene, lb/ton wood fuel | | | 6.95E-05 | 3.32E-05 | 1.00E-04 | 6.77E-05 |
| 17 Perylene, ng/sampling train | < | 39.1 | 1,080 | 395 | 2,690 | 1,388 |
| Perylene, ng/dscm | < | 13.74 | 476.9 | 133.3 | 813.0 | 474.4 |
| Perylene, lb/hr | < | 1.40E-07 | 4.96E-06 | 1.29E-06 | 8.51E-06 | 4.92E-06 |
| Perylene, lb/MMBtu | < | 3.76E-08 | 1.42E-06 | 3.61E-07 | 2.09E-06 | 1.29E-06 |
| Perylene, lb/ton wood fuel | | | 5.86E-06 | 2.18E-06 | 9.35E-06 | 5.80E-06 |

# SOURCE TEST DATA SUMMARY

| | | | | | | |
|---|---|---|---|---|---|---|
| | Client | | | | | Oregon DEQ |
| | Unit / Location | | | | | ACI |
| | A (stack area), $ft^2$ | | | | | 0.785 |
| | $T_{ref}$ (reference temperature), °F | | | | | 68 |
| | $F_d$ (fuel "F" factor @ $T_{ref}$), dscf/MMBtu | | 9,778 | 9,778 | 9,960 | 9,839 |
| | Wood feed rate, tons/hr | | 0.847 | 0.590 | 0.910 | 0.782 |
| | Test number | | Field Blank | Run 1 | Run 2 | Run 3 | Average |
| | Date | | -- | 5/23/2023 | 5/23/2023 | 5/24/2023 | -- |
| | Start / Stop time | | -- | 0950-1250 | 1410-1710 | 0925-1225 | -- |
| 18 | Indeno(1,2,3-cd)pyrene, ng/sampling train | | 115.0 | 8,720 | 8,260 | 23,200 | 13,393 |
| | Indeno(1,2,3-cd)pyrene, ng/dscm | | 40.41 | 3,851 | 2,787 | 7,012 | 4,550 |
| | Indeno(1,2,3-cd)pyrene, lb/hr | | 4.11E-07 | 4.01E-05 | 2.69E-05 | 7.34E-05 | 4.68E-05 |
| | Indeno(1,2,3-cd)pyrene, lb/MMBtu | | 1.11E-07 | 1.15E-05 | 7.54E-06 | 1.80E-05 | 1.23E-05 |
| | Indeno(1,2,3-cd)pyrene, lb/ton wood fuel | | | 4.73E-05 | 4.56E-05 | 8.06E-05 | 5.78E-05 |
| 19 | Dibenzo(a,h)anthracene, ng/sampling train | < | 35.5 | 873.0 | 775.0 | 2,600 | 1,416 |
| | Dibenzo(a,h)anthracene, ng/dscm | < | 12.48 | 385.5 | 261.5 | 785.8 | 477.6 |
| | Dibenzo(a,h)anthracene, lb/hr | < | 1.27E-07 | 4.01E-06 | 2.52E-06 | 8.22E-06 | 4.92E-06 |
| | Dibenzo(a,h)anthracene, lb/MMBtu | < | 3.42E-08 | 1.15E-06 | 7.08E-07 | 2.02E-06 | 1.29E-06 |
| | Dibenzo(a,h)anthracene, lb/ton wood fuel | | | 4.74E-06 | 4.28E-06 | 9.03E-06 | 6.02E-06 |
| 20 | Benzo(g,h,i)perylene, ng/sampling train | | 239.0 | 13,000 | 9,180 | 29,700 | 17,293 |
| | Benzo(g,h,i)perylene, ng/dscm | | 83.99 | 5,741 | 3,098 | 8,976 | 5,938 |
| | Benzo(g,h,i)perylene, lb/hr | | 8.54E-07 | 5.97E-05 | 2.99E-05 | 9.39E-05 | 6.12E-05 |
| | Benzo(g,h,i)perylene, lb/MMBtu | | 2.30E-07 | 1.71E-05 | 8.38E-06 | 2.30E-05 | 1.62E-05 |
| | Benzo(g,h,i)perylene, lb/ton wood fuel | | | 7.05E-05 | 5.07E-05 | 1.03E-04 | 7.48E-05 |

# Appendix A.12
# Metals Calculations/Results

## SOURCE TEST DATA SUMMARY

| | |
|---|---|
| Method | EPA 29 |
| Project No. | 021372 |
| Client | Oregon DEQ |
| Unit / Location | ACI |
| Duct area, $ft^2$ | 0.785 |
| Reference temperature, °F | 68 |

| | Run 1 | Run 2 | Run 3 | Average |
|---|---|---|---|---|
| Test number | | | | |
| Date | 5/24/23 | 5/25/23 | 5/25/23 | -- |
| Start / Stop time | 1418-1718 | 0852-1152 | 1305-1605 | -- |
| Meter Box Number | MB 24 | MB 24 | MB 24 | -- |
| Meter Calibration ($Y_d$) | 0.9898 | 0.9898 | 0.9898 | -- |
| Sample Time, minutes | 180 | 180 | 180 | -- |
| Pitot Coefficient | 0.8400 | 0.8400 | 0.8400 | -- |
| Nozzle Diameter, inches | 0.170 | 0.170 | 0.191 | -- |
| $A_n$ (cross-sectional area of nozzle), $ft^2$ | 0.000 | 0.000 | 0.000 | -- |
| Fuel "F" Factor @ 68°F, dscf/MMBtu | 9,960 | 9,729 | 9,729 | -- |
| Fuel "F" Factor @ $T_{ref}$, dscf/MMBtu | 9,960 | 9,729 | 9,729 | -- |
| Wood fuel loaded, tons/hr | 0.720 | 0.930 | 0.683 | 0.778 |
| Barometric pressure, in Hg | 29.88 | 29.72 | 29.72 | 29.77 |
| Meter box volume, acf | 113.056 | 99.626 | 127.198 | 113.293 |
| Impinger liquid volume, ml | 190.3 | 234.8 | 234.2 | 219.8 |
| Meter temperature, °F | 93.8 | 83.5 | 98.7 | 92.0 |
| Meter pressure, (Delta H) iwg | 1.103 | 0.848 | 1.417 | 1.123 |
| Velocity head, (Delta P) iwg | 3.5204 | 3.2464 | 3.3546 | 3.374 |
| Static pressure, iwg | -6.00 | -6.00 | -6.00 | -6.00 |
| Stack temperature, °F | 809.6 | 1019.2 | 1034.6 | 954.4 |
| $O_2$, % volume dry | 15.59 | 15.03 | 15.45 | 15.35 |
| $CO_2$, % volume dry | 5.17 | 5.77 | 5.36 | 5.44 |
| 1a Standard sample volume, dscf | 106.846 | 95.357 | 118.608 | 106.937 |
| 1b Water vapor volume, scf | 8.975 | 11.073 | 11.045 | 10.364 |
| Moisture fraction, nondimensional | 0.0775 | 0.1040 | 0.0852 | 0.0889 |
| Moisture fraction saturated, nondimensional | NA | NA | NA | NA |
| 1c Moisture fraction applicable, nondimensional | 0.0775 | 0.1040 | 0.0852 | 0.0889 |
| 1d Stack gas molecular weight, dry | 29.451 | 29.525 | 29.475 | 29.484 |
| 1e Stack gas molecular weight, wet | 28.564 | 28.326 | 28.498 | 28.462 |
| 1f Absolute stack pressure, in Hg | 29.439 | 29.279 | 29.279 | 29.332 |
| 1g Stack gas velocity, ft/sec | 165.559 | 172.797 | 176.033 | 171.463 |
| 1h Stack flow rate, acfm | 7,802 | 8,143 | 8,295 | 8,080 |
| 1i Stack flow rate, wscfm | 3,192 | 2,844 | 2,868 | 2,968 |
| 1j Stack flow rate, dscfm | 2,945 | 2,548 | 2,623 | 2,706 |
| Isokinetic ratio, % | 100.43 | 103.58 | 99.14 | 101.05 |

## LAB DATA SUMMARY

| | |
|---|---|
| Method | EPA 29 |
| Project No. | 021372 |
| Client | Oregon DEQ |
| Unit / Location | ACI |
| Duct area, $ft^2$ | 0.785 |
| Reference temperature, °F | 68 |

| | 1-MDL | 2-MDL | 3-MDL | **Reagent Blank** | Run 1 | Run 2 | Run 3 | Average |
|---|---|---|---|---|---|---|---|---|
| Test number | | | | | | | | |
| Date | Method Detection Limits | | | 5/25/23 | 5/24/23 | 5/25/23 | 5/25/23 | -- |
| Start / Stop time | (MDL) | | | -- | 1418-1718 | 0852-1152 | 1305-1605 | -- |

| | | | | Flag | Result | Flag | Result | Flag | Result | Flag | Result | Flag | Result |
|---|---|---|---|---|---|---|---|---|---|---|---|---|---|
| Antimony (Sb), µg | 1.25 | 1.25 | 1.25 | ND | 1.25 | ND | 1.25 | ND | 1.25 | ND | 1.25 | ND | 1.25 |
| Arsenic (As), µg | 1.75 | 1.75 | 1.75 | ND | 1.75 | ADL | 11.7 | ADL | 9.03 | ADL | 10.7 | ADL | 10.48 |
| Barium (Ba), µg | 0.125 | 0.125 | 0.125 | ADL | 1.15 | ADL | 332 | ADL | 261 | ADL | 300 | ADL | 297.7 |
| Beryllium (Be), µg | 0.050 | 0.050 | 0.050 | ND | 0.050 | ADL | 0.532 | ADL | 0.222 | ADL | 1.03 | ADL | 0.595 |
| Cadmium (Cd), µg | 0.050 | 0.050 | 0.050 | ND | 0.050 | ADL | 3.04 | ADL | 1.98 | ADL | 3.78 | ADL | 2.93 |
| Chromium (Cr), µg | 0.200 | 0.200 | 0.200 | ADL | 1.70 | ADL | 13.8 | ADL | 7.18 | ADL | 24.0 | ADL | 15.0 |
| Cobalt (Co), µg | 0.125 | 0.125 | 0.125 | ND | 0.125 | ADL | 5.32 | ADL | 2.20 | ADL | 9.67 | ADL | 5.73 |
| Copper (Cu), µg | 1.25 | 1.25 | 1.25 | ADL | 2.37 | ADL | 410 | ADL | 242 | ADL | 690 | ADL | 447.3 |
| Lead (Pb), µg | 0.050 | 0.050 | 0.050 | ADL | 0.149 | ADL | 30.8 | ADL | 16.0 | ADL | 39.3 | ADL | 28.7 |
| Manganese (Mn), µg | 0.075 | 0.075 | 0.075 | ADL | 0.868 | ADL | 382 | ADL | 177 | ADL | 636 | ADL | 398.3 |
| Mercury (Hg) | | | | | | | | | | | | | |
| Front Half, µg | 0.0219 | 0.0219 | 0.0219 | ND | 0.0219 | ADL | 0.0312 | ND | 0.0219 | ND | 0.0219 | ND | 0.0250 |
| Impingers ($HNO_3/H_2O_2$), µg | 0.0396 | 0.0446 | 0.0442 | ADL | 0.250 | ADL | 0.544 | ADL | 0.561 | ADL | 0.423 | ADL | 0.509 |
| Impinger (Empty), µg | 0.00919 | 0.00831 | 0.00875 | ND | 0.00884 | ND | 0.00919 | ND | 0.00831 | ND | 0.00875 | ND | 0.00875 |
| Impingers ($H_2SO_4/KMnO_4$), µg | 0.0346 | 0.0341 | 0.0347 | ND | 0.00836 | ADL | 0.79 | ADL | 0.653 | ADL | 1.68 | ADL | 1.04 |
| HCl Rinse, µg | 0.0196 | 0.0110 | 0.0114 | ND | 0.0114 | ND | 0.0196 | ND | 0.0110 | ND | 0.0114 | ND | 0.0140 |
| Total Mercury (Hg), µg | **0.125** | **0.120** | **0.121** | DLL | **0.301** | DLL | **1.394** | DLL | **1.255** | DLL | **2.145** | DLL | **1.598** |
| Nickel (Ni), µg | 0.750 | 0.750 | 0.750 | ADL | 7.90 | ADL | 10.1 | ADL | 5.85 | ADL | 15.6 | ADL | 10.5 |
| Phosphorus (P), µg | 5.00 | 5.00 | 5.00 | ADL | 5.74 | ADL | 7,550 | ADL | 4,490 | ADL | 12,700 | ADL | 8,247 |
| Selenium (Se), µg | 3.75 | 3.75 | 3.75 | ND | 3.75 | ND | 3.75 | ND | 3.75 | ND | 3.75 | ND | 3.75 |
| Silver (Ag), µg | 0.500 | 0.500 | 0.500 | ND | 0.500 | ADL | 2.64 | ADL | 2.10 | ADL | 3.19 | ADL | 2.64 |
| Thallium (Tl), µg | 0.100 | 0.100 | 0.100 | ND | 0.100 | ADL | 0.518 | ADL | 0.344 | ADL | 0.749 | ADL | 0.537 |
| Zinc (Zn), µg | 0.750 | 0.750 | 0.750 | ADL | 0.750 | ADL | 1,730 | ADL | 1,510 | ADL | 3,260 | ADL | 2,167 |

Flags: ND - The result was measured below the RL and could not be approximated by the lab.
ADL - The result was detected in the fraction.
DLL - The result was detected in some fractions that contribute to this calculation, but not all.

## BLANK CORRECTION SUMMARY

| | |
|---|---|
| Method | EPA 29 |
| Project No. | 021372 |
| Client | Oregon DEQ |
| Unit / Location | ACI |
| Duct area, ($ft^2$) | 0.79 |
| Reference temperature, °F | 68.00 |
| Filter size, mm | 90 |

| Test number | Run 1 | Run 2 | Run 3 | Average |
|---|---|---|---|---|
| Date | 5/24/23 | 5/25/23 | 5/25/23 | -- |
| Start / Stop time | 1418-1718 | 0852-1152 | 1305-1605 | -- |
| Antimony (Sb), µg | **1.25** | **1.25** | **1.25** | **1.25** |
| Antimony (Sb), Mmdl, µg | 1.250 | 1.250 | 1.250 | 1.250 |
| Antimony (Sb), Mfhb exceeds A, µg | No | No | No | |
| Antimony (Sb), I. "A", µg | 13.8 | 13.8 | 13.8 | 13.8 |
| Antimony (Sb), II.a Mfhb, µg (detected) | 0.00 | 0.00 | 0.00 | 0.00 |
| Antimony (Sb), II.b 5% of Mfh, µg | 0.06 | 0.06 | 0.06 | 0.06 |
| Antimony (Sb), II final - lesser of II(a) or II(b), µg | 0.00 | 0.00 | 0.00 | 0.00 |
| Antimony (Sb), Greater of I or II, µg | 13.80 | 13.80 | 13.80 | 13.80 |
| Antimony (Sb), Mfhb - final, µg | 0.00 | 0.00 | 0.00 | 0.00 |
| Antimony (Sb), Mfh - Mfhb, µg | 1.25 | 1.25 | 1.25 | 1.25 |
| Antimony (Sb), Mfh, blank corrected final, µg | **1.250** | **1.250** | **1.250** | **1.250** |
| Arsenic (As), µg | **11.70** | **9.03** | **10.70** | **10.48** |
| Arsenic (As), Mmdl, µg | 1.750 | 1.750 | 1.750 | 1.750 |
| Arsenic (As), Mfhb exceeds A, µg | No | No | No | |
| Arsenic (As), I. "A", µg | 13.8 | 13.8 | 13.8 | 13.8 |
| Arsenic (As), II.a Mfhb, µg (detected) | 0.00 | 0.00 | 0.00 | 0.00 |
| Arsenic (As), II.b 5% of Mfh, µg | 0.59 | 0.45 | 0.54 | 0.52 |
| Arsenic (As), II final - lesser of II(a) or II(b), µg | 0.00 | 0.00 | 0.00 | 0.00 |
| Arsenic (As), Greater of I or II, µg | 13.80 | 13.80 | 13.80 | 13.80 |
| Arsenic (As), Mfhb - final, µg | 0.00 | 0.00 | 0.00 | 0.00 |
| Arsenic (As), Mfh - Mfhb, µg | 11.70 | 9.03 | 10.70 | 10.48 |
| Arsenic (As), Mfh, blank corrected final, µg | **11.700** | **9.030** | **10.700** | **10.477** |
| Barium (Ba), µg | **332.00** | **261.00** | **300.00** | **297.67** |
| Barium (Ba), Mmdl, µg | 0.125 | 0.125 | 0.125 | 0.125 |
| Barium (Ba), Mfhb exceeds A, µg | No | No | No | |
| Barium (Ba), I. "A", µg | 13.8 | 13.8 | 13.8 | 13.8 |
| Barium (Ba), II.a Mfhb, µg (detected) | 1.15 | 1.15 | 1.15 | 1.15 |
| Barium (Ba), II.b 5% of Mfh, µg | 16.60 | 13.05 | 15.00 | 14.88 |
| Barium (Ba), II final - lesser of II(a) or II(b), µg | 1.15 | 1.15 | 1.15 | 1.15 |
| Barium (Ba), Greater of I or II, µg | 13.80 | 13.80 | 13.80 | 13.80 |
| Barium (Ba), Mfhb - final, µg | 1.15 | 1.15 | 1.15 | 1.15 |
| Barium (Ba), Mfh - Mfhb, µg | 330.85 | 259.85 | 298.85 | 296.52 |
| Barium (Ba), Mfh, blank corrected final, µg | **330.850** | **259.850** | **298.850** | **296.517** |
| Beryllium (Be), µg | **0.53** | **0.22** | **1.03** | **0.59** |
| Beryllium (Be), Mmdl, µg | 0.050 | 0.050 | 0.050 | 0.050 |
| Beryllium (Be), Mfhb exceeds A, µg | No | No | No | |
| Beryllium (Be), I. "A", µg | 13.8 | 13.8 | 13.8 | 13.8 |
| Beryllium (Be), II.a Mfhb, µg (detected) | 0.00 | 0.00 | 0.00 | 0.00 |
| Beryllium (Be), II.b 5% of Mfh, µg | 0.03 | 0.01 | 0.05 | 0.03 |
| Beryllium (Be), II final - lesser of II(a) or II(b), µg | 0.00 | 0.00 | 0.00 | 0.00 |
| Beryllium (Be), Greater of I or II, µg | 13.80 | 13.80 | 13.80 | 13.80 |
| Beryllium (Be), Mfhb - final, µg | 0.00 | 0.00 | 0.00 | 0.00 |
| Beryllium (Be), Mfh - Mfhb, µg | 0.53 | 0.22 | 1.03 | 0.59 |
| Beryllium (Be), Mfh, blank corrected final, µg | **0.532** | **0.222** | **1.030** | **0.595** |
| Cadmium (Cd), µg | **3.04** | **1.98** | **3.78** | **2.93** |
| Cadmium (Cd), Mmdl, µg | 0.050 | 0.050 | 0.050 | 0.050 |
| Cadmium (Cd), Mfhb exceeds A, µg | No | No | No | |
| Cadmium (Cd), I. "A", µg | 13.8 | 13.8 | 13.8 | 13.8 |
| Cadmium (Cd), II.a Mfhb, µg (detected) | 0.00 | 0.00 | 0.00 | 0.00 |
| Cadmium (Cd), II.b 5% of Mfh, µg | 0.15 | 0.10 | 0.19 | 0.15 |
| Cadmium (Cd), II final - lesser of II(a) or II(b), µg | 0.00 | 0.00 | 0.00 | 0.00 |
| Cadmium (Cd), Greater of I or II, µg | 13.80 | 13.80 | 13.80 | 13.80 |
| Cadmium (Cd), Mfhb - final, µg | 0.00 | 0.00 | 0.00 | 0.00 |
| Cadmium (Cd), Mfh - Mfhb, µg | 3.04 | 1.98 | 3.78 | 2.93 |
| Cadmium (Cd), Mfh, blank corrected final, µg | **3.040** | **1.980** | **3.780** | **2.933** |
| Chromium (Cr), µg | **13.80** | **7.18** | **24.00** | **14.99** |
| Chromium (Cr), Mmdl, µg | 0.200 | 0.200 | 0.200 | 0.200 |
| Chromium (Cr), Mfhb exceeds A, µg | No | No | No | |
| Chromium (Cr), I. "A", µg | 13.8 | 13.8 | 13.8 | 13.8 |
| Chromium (Cr), II.a Mfhb, µg (detected) | 1.70 | 1.70 | 1.70 | 1.70 |
| Chromium (Cr), II.b 5% of Mfh, µg | 0.69 | 0.36 | 1.20 | 0.75 |
| Chromium (Cr), II final - lesser of II(a) or II(b), µg | 0.69 | 0.36 | 1.20 | 0.75 |
| Chromium (Cr), Greater of I or II, µg | 13.80 | 13.80 | 13.80 | 13.80 |
| Chromium (Cr), Mfhb - final, µg | 1.70 | 1.70 | 1.70 | 1.70 |
| Chromium (Cr), Mfh - Mfhb, µg | 12.10 | 5.48 | 22.30 | 13.29 |
| Chromium (Cr), Mfh, blank corrected final, µg | **12.100** | **5.480** | **22.300** | **13.293** |

| | | | | |
|---|---|---|---|---|
| Cobalt (Co), µg | **5.32** | **2.20** | **9.67** | **5.73** |
| Cobalt (Co), Mmdl, µg | 0.125 | 0.125 | 0.125 | 0.125 |
| Cobalt (Co), Mfhb exceeds A, µg | No | No | No | |
| Cobalt (Co), I. "A", µg | 13.8 | 13.8 | 13.8 | 13.8 |
| Cobalt (Co), II.a Mfhb, µg (detected) | 0.00 | 0.00 | 0.00 | 0.00 |
| Cobalt (Co), II.b 5% of Mfh, µg | 0.27 | 0.11 | 0.48 | 0.29 |
| Cobalt (Co), II final - lesser of II(a) or II(b), µg | 0.00 | 0.00 | 0.00 | 0.00 |
| Cobalt (Co), Greater of I or II, µg | 13.80 | 13.80 | 13.80 | 13.80 |
| Cobalt (Co), Mfhb - final, µg | 0.00 | 0.00 | 0.00 | 0.00 |
| Cobalt (Co), Mfh - Mfhb, µg | 5.32 | 2.20 | 9.67 | 5.73 |
| Cobalt (Co), Mfh, blank corrected final, µg | **5.320** | **2.200** | **9.670** | **5.730** |
| | | | | |
| Copper (Cu), µg | **410.00** | **242.00** | **690.00** | **447.33** |
| Copper (Cu), Mmdl, µg | 1.250 | 1.250 | 1.250 | 1.250 |
| Copper (Cu), Mfhb exceeds A, µg | No | No | No | |
| Copper (Cu), I. "A", µg | 13.8 | 13.8 | 13.8 | 13.8 |
| Copper (Cu), II.a Mfhb, µg (detected) | 2.37 | 2.37 | 2.37 | 2.37 |
| Copper (Cu), II.b 5% of Mfh, µg | 20.50 | 12.10 | 34.50 | 22.37 |
| Copper (Cu), II final - lesser of II(a) or II(b), µg | 2.37 | 2.37 | 2.37 | 2.37 |
| Copper (Cu), Greater of I or II, µg | 13.80 | 13.80 | 13.80 | 13.80 |
| Copper (Cu), Mfhb - final, µg | 2.37 | 2.37 | 2.37 | 2.37 |
| Copper (Cu), Mfh - Mfhb, µg | 407.63 | 239.63 | 687.63 | 444.96 |
| Copper (Cu), Mfh, blank corrected final, µg | **407.630** | **239.630** | **687.630** | **444.963** |
| | | | | |
| Lead (Pb), µg | **30.80** | **16.00** | **39.30** | **28.70** |
| Lead (Pb), Mmdl, µg | 0.050 | 0.050 | 0.050 | 0.050 |
| Lead (Pb), Mfhb exceeds A, µg | No | No | No | |
| Lead (Pb), I. "A", µg | 13.8 | 13.8 | 13.8 | 13.8 |
| Lead (Pb), II.a Mfhb, µg (detected) | 0.15 | 0.15 | 0.15 | 0.15 |
| Lead (Pb), II.b 5% of Mfh, µg | 1.54 | 0.80 | 1.97 | 1.44 |
| Lead (Pb), II final - lesser of II(a) or II(b), µg | 0.15 | 0.15 | 0.15 | 0.15 |
| Lead (Pb), Greater of I or II, µg | 13.80 | 13.80 | 13.80 | 13.80 |
| Lead (Pb), Mfhb - final, µg | 0.15 | 0.15 | 0.15 | 0.15 |
| Lead (Pb), Mfh - Mfhb, µg | 30.65 | 15.85 | 39.15 | 28.55 |
| Lead (Pb), Mfh, blank corrected final, µg | **30.651** | **15.851** | **39.151** | **28.551** |
| | | | | |
| Manganese (Mn), µg | **382.00** | **177.00** | **636.00** | **398.33** |
| Manganese (Mn), Mmdl, µg | 0.075 | 0.075 | 0.075 | 0.075 |
| Manganese (Mn), Mfhb exceeds A, µg | No | No | No | |
| Manganese (Mn), I. "A", µg | 13.8 | 13.8 | 13.8 | 13.8 |
| Manganese (Mn), II.a Mfhb, µg (detected) | 0.87 | 0.87 | 0.87 | 0.87 |
| Manganese (Mn), II.b 5% of Mfh, µg | 19.10 | 8.85 | 31.80 | 19.92 |
| Manganese (Mn), II final - lesser of II(a) or II(b), µg | 0.87 | 0.87 | 0.87 | 0.87 |
| Manganese (Mn), Greater of I or II, µg | 13.80 | 13.80 | 13.80 | 13.80 |
| Manganese (Mn), Mfhb - final, µg | 0.87 | 0.87 | 0.87 | 0.87 |
| Manganese (Mn), Mfh - Mfhb, µg | 381.13 | 176.13 | 635.13 | 397.47 |
| Manganese (Mn), Mfh, blank corrected final, µg | **381.132** | **176.132** | **635.132** | **397.465** |
| | | | | |
| Mercury (Hg), front half, µg | **0.03** | **0.02** | **0.02** | **0.03** |
| Mercury (Hg), back half, µg | **1.36** | **1.23** | **2.12** | **1.57** |
| Mercury (Hg) - FH, Mmdl, µg | 0.022 | 0.022 | 0.022 | 0.022 |
| Mercury (Hg) - BH, Mmdl, µg | 0.103 | 0.098 | 0.099 | 0.100 |
| Mercury (Hg), (Hgfhb + Hgbhb) exceeds 0.6 µg | No | No | No | |
| Mercury (Hg), I. 0.60, µg | 0.6 | 0.6 | 0.6 | 0.6 |
| Mercury (Hg), II.a.1 Hgfhb, µg (detected) | 0.00 | 0.00 | 0.00 | 0.00 |
| Mercury (Hg), II.a.2 Hgbhb, µg (detected) | 0.25 | 0.25 | 0.25 | 0.25 |
| Mercury (Hg), II.a (Hgfhb + Hgbhb), µg (detected) | 0.25 | 0.25 | 0.25 | 0.25 |
| Mercury (Hg), II.b 5% of (Hgfh+Hgbh), µg | 0.07 | 0.06 | 0.11 | 0.08 |
| Mercury (Hg), II final - lesser of II(a) or II(b), µg | 0.07 | 0.06 | 0.11 | 0.08 |
| Mercury (Hg), Greater of I or II, µg | 0.60 | 0.60 | 0.60 | 0.60 |
| Mercury (Hg), (Hgfhb + Hgbhb) - final, µg | 0.25 | 0.25 | 0.25 | 0.25 |
| Mercury (Hg), (Hgfh - Hgfhb) + (Hgbh - Hgbhb), µg | 1.14 | 1.01 | 1.90 | 1.35 |
| Mercury (Hg), total, blank corrected final, µg | **1.144** | **1.005** | **1.895** | **1.348** |
| | | | | |
| Nickel (Ni), µg | **10.10** | **5.85** | **15.60** | **10.52** |
| Nickel (Ni), Mmdl, µg | 0.750 | 0.750 | 0.750 | 0.750 |
| Nickel (Ni), Mfhb exceeds A, µg | No | No | No | |
| Nickel (Ni), I. "A", µg | 13.8 | 13.8 | 13.8 | 13.8 |
| Nickel (Ni), II.a Mfhb, µg (detected) | 7.90 | 7.90 | 7.90 | 7.90 |
| Nickel (Ni), II.b 5% of Mfh, µg | 0.51 | 0.29 | 0.78 | 0.53 |
| Nickel (Ni), II final - lesser of II(a) or II(b), µg | 0.51 | 0.29 | 0.78 | 0.53 |
| Nickel (Ni), Greater of I or II, µg | 13.80 | 13.80 | 13.80 | 13.80 |
| Nickel (Ni), Mfhb - final, µg | 7.90 | 7.90 | 7.90 | 7.90 |
| Nickel (Ni), Mfh - Mfhb, µg | 2.20 | -2.05 | 7.70 | 2.62 |
| Nickel (Ni), Mfh, blank corrected final, µg | **2.200** | **0.750** | **7.700** | **3.550** |
| | | | | |
| Phosphorus (P), µg | **7550.00** | **4490.00** | **12700.00** | **8246.67** |
| Phosphorus (P), Mmdl, µg | 5.000 | 5.000 | 5.000 | 5.000 |
| Phosphorus (P), Mfhb exceeds A, µg | No | No | No | |
| Phosphorus (P), I. "A", µg | 13.8 | 13.8 | 13.8 | 13.8 |
| Phosphorus (P), II.a Mfhb, µg (detected) | 5.74 | 5.74 | 5.74 | 5.74 |
| Phosphorus (P), II.b 5% of Mfh, µg | 377.50 | 224.50 | 635.00 | 412.33 |
| Phosphorus (P), II final - lesser of II(a) or II(b), µg | 5.74 | 5.74 | 5.74 | 5.74 |
| Phosphorus (P), Greater of I or II, µg | 13.80 | 13.80 | 13.80 | 13.80 |
| Phosphorus (P), Mfhb - final, µg | 5.74 | 5.74 | 5.74 | 5.74 |
| Phosphorus (P), Mfh - Mfhb, µg | 7544.26 | 4484.26 | 12694.26 | 8240.93 |
| Phosphorus (P), Mfh, blank corrected final, µg | **7544.260** | **4484.260** | **12694.260** | **8240.927** |

| | | | | |
|---|---|---|---|---|
| Selenium (Se), µg | **3.75** | **3.75** | **3.75** | **3.75** |
| Selenium (Se), Mmdl, µg | 3.750 | 3.750 | 3.750 | 3.750 |
| Selenium (Se), Mfhb exceeds A, µg | No | No | No | |
| Selenium (Se), I. "A", µg | 13.8 | 13.8 | 13.8 | 13.8 |
| Selenium (Se), II.a Mfhb, µg (detected) | 0.00 | 0.00 | 0.00 | 0.00 |
| Selenium (Se), II.b 5% of Mfh, µg | 0.19 | 0.19 | 0.19 | 0.19 |
| Selenium (Se), II final - lesser of II(a) or II(b), µg | 0.00 | 0.00 | 0.00 | 0.00 |
| Selenium (Se), Greater of I or II, µg | 13.80 | 13.80 | 13.80 | 13.80 |
| Selenium (Se), Mfhb - final, µg | 0.00 | 0.00 | 0.00 | 0.00 |
| Selenium (Se), Mfh - Mfhb, µg | 3.75 | 3.75 | 3.75 | 3.75 |
| Selenium (Se), Mfh, blank corrected final, µg | **3.750** | **3.750** | **3.750** | **3.750** |
| | | | | |
| Silver (Ag), µg | **2.64** | **2.10** | **3.19** | **2.64** |
| Silver (Ag), Mmdl, µg | 0.500 | 0.500 | 0.500 | 0.500 |
| Silver (Ag), Mfhb exceeds A, µg | No | No | No | |
| Silver (Ag), I. "A", µg | 13.8 | 13.8 | 13.8 | 13.8 |
| Silver (Ag), II.a Mfhb, µg (detected) | 0.00 | 0.00 | 0.00 | 0.00 |
| Silver (Ag), II.b 5% of Mfh, µg | 0.132 | 0.11 | 0.16 | 0.13 |
| Silver (Ag), II final - lesser of II(a) or II(b), µg | 0.00 | 0.00 | 0.00 | 0.00 |
| Silver (Ag), Greater of I or II, µg | 13.80 | 13.80 | 13.80 | 13.80 |
| Silver (Ag), Mfhb - final, µg | 0.00 | 0.00 | 0.00 | 0.00 |
| Silver (Ag), Mfh - Mfhb, µg | 2.64 | 2.10 | 3.19 | 2.64 |
| Silver (Ag), Mfh, blank corrected final, µg | **2.640** | **2.100** | **3.190** | **2.643** |
| | | | | |
| Thallium (Tl), µg | **0.52** | **0.34** | **0.75** | **0.54** |
| Thallium (Tl), Mmdl, µg | 0.100 | 0.100 | 0.100 | 0.100 |
| Thallium (Tl), Mfhb exceeds A, µg | No | No | No | |
| Thallium (Tl), I. "A", µg | 13.8 | 13.8 | 13.8 | 13.8 |
| Thallium (Tl), II.a Mfhb, µg (detected) | 0.00 | 0.00 | 0.00 | 0.00 |
| Thallium (Tl), II.b 5% of Mfh, µg | 0.03 | 0.02 | 0.04 | 0.03 |
| Thallium (Tl), II final - lesser of II(a) or II(b), µg | 0.00 | 0.00 | 0.00 | 0.00 |
| Thallium (Tl), Greater of I or II, µg | 13.80 | 13.80 | 13.80 | 13.80 |
| Thallium (Tl), Mfhb - final, µg | 0.00 | 0.00 | 0.00 | 0.00 |
| Thallium (Tl), Mfh - Mfhb, µg | 0.52 | 0.34 | 0.75 | 0.54 |
| Thallium (Tl), Mfh, blank corrected final, µg | **0.518** | **0.344** | **0.749** | **0.537** |
| | | | | |
| Zinc (Zn), µg | **1730.00** | **1510.00** | **3260.00** | **2166.67** |
| Zinc (Zn), Mmdl, µg | 0.750 | 0.750 | 0.750 | 0.750 |
| Zinc (Zn), Mfhb exceeds A, µg | No | No | No | |
| Zinc (Zn), I. "A", µg | 13.8 | 13.8 | 13.8 | 13.8 |
| Zinc (Zn), II.a Mfhb, µg (detected) | 0.75 | 0.75 | 0.75 | 0.75 |
| Zinc (Zn), II.b 5% of Mfh, µg | 86.50 | 75.50 | 163.00 | 108.33 |
| Zinc (Zn), II final - lesser of II(a) or II(b), µg | 0.75 | 0.75 | 0.75 | 0.75 |
| Zinc (Zn), Greater of I or II, µg | 13.80 | 13.80 | 13.80 | 13.80 |
| Zinc (Zn), Mfhb - final, µg | 0.75 | 0.75 | 0.75 | 0.75 |
| Zinc (Zn), Mfh - Mfhb, µg | 1729.25 | 1509.25 | 3259.25 | 2165.92 |
| Zinc (Zn), Mfh, blank corrected final, µg | **1729.250** | **1509.250** | **3259.250** | **2165.917** |

## RESULTS SUMMARY

| | |
|---|---|
| Method | EPA 29 |
| Project No. | 021372 |
| Client | Oregon DEQ |
| Unit / Location | ACI |
| Duct area, $ft^2$ | 0.785 |
| Reference temperature, °F | 68 |

| | Run 1 | Run 2 | Run 3 | Average |
|---|---|---|---|---|
| Test number | | | | |
| Date | 5/24/23 | 5/25/23 | 5/25/23 | -- |
| Start / Stop time | 1418-1718 | 0852-1152 | 1305-1605 | -- |
| $O_2$, % volume dry | 15.59 | 15.03 | 15.45 | 15.35 |
| $CO_2$, % volume dry | 5.17 | 5.77 | 5.36 | 5.44 |
| Stack Temperature, °F | 809.6 | 1019.2 | 1034.6 | 954.4 |
| Moisture Content, % by volume | 7.75 | 10.40 | 8.52 | 8.89 |
| Stack Flow Rate, dscfm | 2,945 | 2,548 | 2,623 | 2,706 |
| Standard Sample Volume, dscf | 106.846 | 95.357 | 118.608 | 106.937 |

| | | | | | | | | |
|---|---|---|---|---|---|---|---|---|
| **Antimony (Sb)** | | | | | | | | |
| mg/dscm | ND | 4.13E-04 | ND | 4.63E-04 | ND | 3.72E-04 | ND | 4.16E-04 |
| lb/hr | ND | 4.55E-06 | ND | 4.41E-06 | ND | 3.65E-06 | ND | 4.21E-06 |
| lb/MMBtu | ND | 1.01E-06 | ND | 9.99E-07 | ND | 8.65E-07 | ND | 9.58E-07 |
| lb/tons of wood fuel | ND | 6.32E-06 | ND | 4.75E-06 | ND | 5.35E-06 | ND | 5.47E-06 |
| **Arsenic (As)** | | | | | | | | |
| mg/dscm | ADL | 3.87E-03 | ADL | 3.34E-03 | ADL | 3.19E-03 | ADL | 3.47E-03 |
| lb/hr | ADL | 4.26E-05 | ADL | 3.19E-05 | ADL | 3.13E-05 | ADL | 3.53E-05 |
| lb/MMBtu | ADL | 9.46E-06 | ADL | 7.22E-06 | ADL | 7.41E-06 | ADL | 8.03E-06 |
| lb/tons of wood fuel | ADL | 5.92E-05 | ADL | 3.43E-05 | ADL | 4.58E-05 | ADL | 4.64E-05 |
| **Barium (Ba)** | | | | | | | | |
| mg/dscm | ADL | 1.09E-01 | ADL | 9.62E-02 | ADL | 8.90E-02 | ADL | 9.82E-02 |
| lb/hr | ADL | 1.21E-03 | ADL | 9.18E-04 | ADL | 8.74E-04 | ADL | 9.99E-04 |
| lb/MMBtu | ADL | 2.67E-04 | ADL | 2.08E-04 | ADL | 2.07E-04 | ADL | 2.27E-04 |
| lb/tons of wood fuel | ADL | 1.67E-03 | ADL | 9.87E-04 | ADL | 1.28E-03 | ADL | 1.31E-03 |
| **Beryllium (Be)** | | | | | | | | |
| mg/dscm | ADL | 1.76E-04 | ADL | 8.22E-05 | ADL | 3.07E-04 | ADL | 1.88E-04 |
| lb/hr | ADL | 1.94E-06 | ADL | 7.84E-07 | ADL | 3.01E-06 | ADL | 1.91E-06 |
| lb/MMBtu | ADL | 4.30E-07 | ADL | 1.77E-07 | ADL | 7.13E-07 | ADL | 4.40E-07 |
| lb/tons of wood fuel | ADL | 2.69E-06 | ADL | 8.43E-07 | ADL | 4.41E-06 | ADL | 2.65E-06 |
| **Cadmium (Cd)** | | | | | | | | |
| mg/dscm | ADL | 1.00E-03 | ADL | 7.33E-04 | ADL | 1.13E-03 | ADL | 9.54E-04 |
| lb/hr | ADL | 1.11E-05 | ADL | 6.99E-06 | ADL | 1.10E-05 | ADL | 9.71E-06 |
| lb/MMBtu | ADL | 2.46E-06 | ADL | 1.58E-06 | ADL | 2.62E-06 | ADL | 2.22E-06 |
| lb/tons of wood fuel | ADL | 1.54E-05 | ADL | 7.52E-06 | ADL | 1.62E-05 | ADL | 1.30E-05 |
| **Chromium (Cr)** | | | | | | | | |
| mg/dscm | ADL | 4.00E-03 | ADL | 2.03E-03 | ADL | 6.64E-03 | ADL | 4.22E-03 |
| lb/hr | ADL | 4.41E-05 | ADL | 1.94E-05 | ADL | 6.52E-05 | ADL | 4.29E-05 |
| lb/MMBtu | ADL | 9.78E-06 | ADL | 4.38E-06 | ADL | 1.54E-05 | ADL | 9.87E-06 |
| lb/tons of wood fuel | ADL | 6.12E-05 | ADL | 2.08E-05 | ADL | 9.54E-05 | ADL | 5.91E-05 |
| **Cobalt (Co)** | | | | | | | | |
| mg/dscm | ADL | 1.76E-03 | ADL | 8.15E-04 | ADL | 2.88E-03 | ADL | 1.82E-03 |
| lb/hr | ADL | 1.94E-05 | ADL | 7.77E-06 | ADL | 2.83E-05 | ADL | 1.85E-05 |
| lb/MMBtu | ADL | 4.30E-06 | ADL | 1.76E-06 | ADL | 6.69E-06 | ADL | 4.25E-06 |
| lb/tons of wood fuel | ADL | 2.69E-05 | ADL | 8.36E-06 | ADL | 4.14E-05 | ADL | 2.55E-05 |
| **Copper (Cu)** | | | | | | | | |
| mg/dscm | ADL | 1.35E-01 | ADL | 8.87E-02 | ADL | 2.05E-01 | ADL | 1.43E-01 |
| lb/hr | ADL | 1.48E-03 | ADL | 8.46E-04 | ADL | 2.01E-03 | ADL | 1.45E-03 |
| lb/MMBtu | ADL | 3.29E-04 | ADL | 1.92E-04 | ADL | 4.76E-04 | ADL | 3.32E-04 |
| lb/tons of wood fuel | ADL | 2.06E-03 | ADL | 9.10E-04 | ADL | 2.94E-03 | ADL | 1.97E-03 |
| **Lead (Pb)** | | | | | | | | |
| mg/dscm | ADL | 1.01E-02 | ADL | 5.87E-03 | ADL | 1.17E-02 | ADL | 9.22E-03 |
| lb/hr | ADL | 1.12E-04 | ADL | 5.60E-05 | ADL | 1.14E-04 | ADL | 9.40E-05 |
| lb/MMBtu | ADL | 2.48E-05 | ADL | 1.27E-05 | ADL | 2.71E-05 | ADL | 2.15E-05 |
| lb/tons of wood fuel | ADL | 1.55E-04 | ADL | 6.02E-05 | ADL | 1.67E-04 | ADL | 1.28E-04 |
| **Manganese (Mn)** | | | | | | | | |
| mg/dscm | ADL | 1.26E-01 | ADL | 6.52E-02 | ADL | 1.89E-01 | ADL | 1.27E-01 |
| lb/hr | ADL | 1.39E-03 | ADL | 6.22E-04 | ADL | 1.86E-03 | ADL | 1.29E-03 |
| lb/MMBtu | ADL | 3.08E-04 | ADL | 1.41E-04 | ADL | 4.40E-04 | ADL | 2.96E-04 |
| lb/tons of wood fuel | ADL | 1.93E-03 | ADL | 6.69E-04 | ADL | 2.72E-03 | ADL | 1.77E-03 |
| **Mercury (Hg)** | | | | | | | | |
| mg/dscm | DLL | 3.78E-04 | DLL | 3.72E-04 | DLL | 5.64E-04 | DLL | 4.38E-04 |
| lb/hr | DLL | 4.17E-06 | DLL | 3.55E-06 | DLL | 5.54E-06 | DLL | 4.42E-06 |
| lb/MMBtu | DLL | 9.25E-07 | DLL | 8.04E-07 | DLL | 1.31E-06 | DLL | 1.01E-06 |
| lb/tons of wood fuel | DLL | 5.79E-06 | DLL | 3.82E-06 | DLL | 8.11E-06 | DLL | 5.90E-06 |
| **Nickel (Ni)** | | | | | | | | |
| mg/dscm | ADL | 7.27E-04 | ND | 2.78E-04 | ADL | 2.29E-03 | DLL | 1.10E-03 |
| lb/hr | ADL | 8.01E-06 | ND | 2.65E-06 | ADL | 2.25E-05 | DLL | 1.11E-05 |
| lb/MMBtu | ADL | 1.78E-06 | ND | 6.00E-07 | ADL | 5.33E-06 | DLL | 2.57E-06 |
| lb/tons of wood fuel | ADL | 1.11E-05 | ND | 2.85E-06 | ADL | 3.29E-05 | DLL | 1.56E-05 |

## RESULTS SUMMARY

| | |
|---|---|
| Method | EPA 29 |
| Project No. | 021372 |
| Client | Oregon DEQ |
| Unit / Location | ACI |
| Duct area, $ft^2$ | 0.785 |
| Reference temperature, °F | 68 |

| | Run 1 | Run 2 | Run 3 | Average |
|---|---|---|---|---|
| Test number | | | | |
| Date | 5/24/23 | 5/25/23 | 5/25/23 | -- |
| Start / Stop time | 1418-1718 | 0852-1152 | 1305-1605 | -- |
| $O_2$, % volume dry | 15.59 | 15.03 | 15.45 | 15.35 |
| $CO_2$, % volume dry | 5.17 | 5.77 | 5.36 | 5.44 |
| Stack Temperature, °F | 809.6 | 1019.2 | 1034.6 | 954.4 |
| Moisture Content, % by volume | 7.75 | 10.40 | 8.52 | 8.89 |
| Stack Flow Rate, dscfm | 2,945 | 2,548 | 2,623 | 2,706 |
| Standard Sample Volume, dscf | 106.846 | 95.357 | 118.608 | 106.937 |
| **Phosphorus (P)** | | | | |
| mg/dscm | ADL 2.49E+00 | ADL 1.66E+00 | ADL 3.78E+00 | ADL 2.64E+00 |
| lb/hr | ADL 2.75E-02 | ADL 1.58E-02 | ADL 3.71E-02 | ADL 2.68E-02 |
| lb/MMBtu | ADL 6.10E-03 | ADL 3.59E-03 | ADL 8.79E-03 | ADL 6.16E-03 |
| lb/tons of wood fuel | ADL 3.82E-02 | ADL 1.70E-02 | ADL 5.43E-02 | ADL 3.65E-02 |
| **Selenium (Se)** | | | | |
| mg/dscm | ND 1.24E-03 | ND 1.39E-03 | ND 1.12E-03 | ND 1.25E-03 |
| lb/hr | ND 1.37E-05 | ND 1.32E-05 | ND 1.10E-05 | ND 1.26E-05 |
| lb/MMBtu | ND 3.03E-06 | ND 3.00E-06 | ND 2.60E-06 | ND 2.87E-06 |
| lb/tons of wood fuel | ND 1.90E-05 | ND 1.42E-05 | ND 1.60E-05 | ND 1.64E-05 |
| **Silver (Ag)** | | | | |
| mg/dscm | ADL 8.72E-04 | ADL 7.78E-04 | ADL 9.50E-04 | ADL 8.67E-04 |
| lb/hr | ADL 9.62E-06 | ADL 7.42E-06 | ADL 9.32E-06 | ADL 8.79E-06 |
| lb/MMBtu | ADL 2.13E-06 | ADL 1.68E-06 | ADL 2.21E-06 | ADL 2.01E-06 |
| lb/tons of wood fuel | ADL 1.34E-05 | ADL 7.98E-06 | ADL 1.36E-05 | ADL 1.17E-05 |
| **Thallium (Tl)** | | | | |
| mg/dscm | ADL 1.71E-04 | ADL 1.27E-04 | ADL 2.23E-04 | ADL 1.74E-04 |
| lb/hr | ADL 1.89E-06 | ADL 1.21E-06 | ADL 2.19E-06 | ADL 1.76E-06 |
| lb/MMBtu | ADL 4.19E-07 | ADL 2.75E-07 | ADL 5.18E-07 | ADL 4.04E-07 |
| lb/tons of wood fuel | ADL 2.62E-06 | ADL 1.31E-06 | ADL 3.20E-06 | ADL 2.38E-06 |
| **Zinc (Zn)** | | | | |
| mg/dscm | ADL 5.71E-01 | ADL 5.59E-01 | ADL 9.70E-01 | ADL 7.00E-01 |
| lb/hr | ADL 6.30E-03 | ADL 5.33E-03 | ADL 9.53E-03 | ADL 7.05E-03 |
| lb/MMBtu | ADL 1.40E-03 | ADL 1.21E-03 | ADL 2.26E-03 | ADL 1.62E-03 |
| lb/tons of wood fuel | ADL 8.75E-03 | ADL 5.73E-03 | ADL 1.39E-02 | ADL 9.47E-03 |

## LAB DATA SUMMARY

| | |
|---|---|
| Method | EPA 29 |
| Project No. | 021372 |
| Client | Oregon DEQ |
| Unit / Location | ACI |
| Duct area, $ft^2$ | 0.785 |
| Reference temperature, °F | 68.0 |

| | 1-MDL | 2-MDL | 3-MDL | Reagent Blank | | Run 1 | | Run 2 | | Run 3 | | Average | |
|---|---|---|---|---|---|---|---|---|---|---|---|---|---|
| Test number | | | | -- | | -- | | -- | | -- | | -- | |
| Date | Method Detection Limits | | | -- | | 5/24/23 | | 5/25/23 | | 5/25/23 | | -- | |
| Start / Stop time | (MDL) | | | -- | | 1418-1718 | | 0852-1152 | | 1305-1605 | | -- | |
| | | | | Flag | Result | Flag | Result | Flag | Result | Flag | Result | Flag | Result |
| Antimony (Sb), µg | 0.640 | 0.620 | 0.625 | ND | 0.625 | ND | 0.640 | ND | 0.620 | ND | 0.625 | ND | 0.628 |
| Arsenic (As), µg | 0.896 | 0.868 | 0.875 | ND | 0.875 | ND | 0.896 | ND | 0.868 | ND | 0.875 | ND | 0.880 |
| Barium (Ba), µg | 0.064 | 0.062 | 0.062 | ADL | 0.191 | ADL | 1.28 | ADL | 0.471 | ADL | 0.664 | ADL | 0.805 |
| Beryllium (Be), µg | 0.026 | 0.025 | 0.025 | ND | 0.025 | ND | 0.026 | ND | 0.025 | ND | 0.025 | ND | 0.025 |
| Cadmium (Cd), µg | 0.051 | 0.050 | 0.050 | ND | 0.050 | ND | 0.051 | ADL | 0.753 | ND | 0.050 | DLL | 0.285 |
| Chromium (Cr), µg | 0.102 | 0.099 | 0.100 | ND | 0.100 | ADL | 0.265 | ADL | 0.314 | ADL | 0.146 | ADL | 0.242 |
| Cobalt (Co), µg | 0.064 | 0.062 | 0.062 | ND | 0.062 | ADL | 0.301 | ADL | 0.101 | ADL | 0.140 | ADL | 0.181 |
| Copper (Cu), µg | 0.640 | 0.620 | 0.625 | ND | 0.625 | ND | 0.640 | ADL | 0.997 | ADL | 0.892 | DLL | 0.843 |
| Lead (Pb), µg | 0.640 | 0.620 | 0.625 | ND | 0.625 | ND | 0.640 | ND | 0.620 | ND | 0.625 | ND | 0.628 |
| Manganese (Mn), µg | 0.038 | 0.037 | 0.038 | ADL | 0.114 | ADL | 0.282 | ADL | 0.549 | ADL | 0.957 | ADL | 0.596 |
| Nickel (Ni), µg | 0.384 | 0.372 | 0.375 | ND | 0.375 | ND | 0.384 | ND | 0.372 | ND | 0.375 | ND | 0.377 |
| Phosphorus (P), µg | 2.56 | 2.48 | 2.50 | ND | 2.50 | ADL | 6.78 | ADL | 2.82 | ADL | 9.02 | ADL | 6.21 |
| Selenium (Se), µg | 1.92 | 1.86 | 1.88 | ND | 1.88 | ND | 1.92 | ND | 1.86 | ND | 1.88 | ND | 1.89 |
| Silver (Ag), µg | 0.256 | 0.248 | 0.250 | ND | 0.250 | ADL | 0.369 | ND | 0.248 | ND | 0.250 | DLL | 0.289 |
| Thallium (Tl), µg | 1.28 | 1.24 | 1.25 | ND | 1.25 | ND | 1.28 | ND | 1.24 | ND | 1.25 | ND | 1.26 |
| Zinc (Zn), µg | 0.384 | 0.372 | 0.375 | ND | 0.375 | ADL | 5.14 | ADL | 19.1 | ADL | 3.21 | ADL | 9.15 |

Flags: ND - The result was measured below the RL and could not be approximated by the lab.
ADL - The result was detected in the fraction.
DLL - The result was detected in some fractions that contribute to this calculation, but not all.

## BLANK CORRECTION SUMMARY

| | |
|---|---|
| Method | EPA 29 |
| Project No. | 021372 |
| Client | Oregon DEQ |
| Unit / Location | ACI |
| Duct area, $ft^2$ | 0.79 |
| Reference temperature, °F | 68.00 |

| | Run 1 | Run 2 | Run 3 | Average |
|---|---|---|---|---|
| Test number | 5/24/23 | 5/25/23 | 5/25/23 | -- |
| Date | 1418-1718 | 0852-1152 | 1305-1605 | -- |
| Start / Stop time | | | | |
| Antimony (Sb), µg | **0.64** | **0.62** | **0.63** | **0.63** |
| Antimony (Sb), Mmdl, µg | 0.640 | 0.620 | 0.625 | 0.628 |
| Antimony (Sb), If Mbhb exceeds 1, µg | No | No | No | |
| Antimony (Sb), I. 1 µg | 1 | 1 | 1 | 1 |
| Antimony (Sb), II.a Mbhb, µg (detected) | 0.00 | 0.00 | 0.00 | 0.00 |
| Antimony (Sb), II.b 5% of Mbh, µg | 0.03 | 0.03 | 0.03 | 0.03 |
| Antimony (Sb), II final - lesser of II(a) or II(b), µg | 0.00 | 0.00 | 0.00 | 0.00 |
| Antimony (Sb), Mbhb - greater of I or II, µg | **1.00** | **1.00** | **1.00** | **1.00** |
| Antimony (Sb), Mbhb - final, µg | 0.00 | 0.00 | 0.00 | 0.00 |
| Antimony (Sb), Mbh - Mfhb, µg | 0.64 | 0.62 | 0.63 | 0.63 |
| Antimony (Sb), Mbh, blank corrected final, µg | **0.64** | **0.62** | **0.63** | **0.63** |
| Arsenic (As), µg | **0.90** | **0.87** | **0.88** | **0.88** |
| Arsenic (As), Mmdl, µg | 0.896 | 0.868 | 0.875 | 0.880 |
| Arsenic (As), If Mbhb exceeds 1, µg | No | No | No | |
| Arsenic (As), I. 1 µg | 1 | 1 | 1 | 1 |
| Arsenic (As), II.a Mbhb, µg (detected) | 0.00 | 0.00 | 0.00 | 0.00 |
| Arsenic (As), II.b 5% of Mbh, µg | 0.04 | 0.04 | 0.04 | 0.04 |
| Arsenic (As), II final - lesser of II(a) or II(b), µg | 0.00 | 0.00 | 0.00 | 0.00 |
| Arsenic (As), Mbhb - greater of I or II, µg | **1.00** | **1.00** | **1.00** | **1.00** |
| Arsenic (As), Mbhb - final, µg | 0.00 | 0.00 | 0.00 | 0.00 |
| Arsenic (As), Mbh - Mfhb, µg | 0.90 | 0.87 | 0.88 | 0.88 |
| Arsenic (As), Mbh, blank corrected final, µg | **0.90** | **0.87** | **0.88** | **0.88** |
| Barium (Ba), µg | **1.28** | **0.47** | **0.66** | **0.81** |
| Barium (Ba), Mmdl, µg | 0.064 | 0.062 | 0.062 | 0.063 |
| Barium (Ba), If Mbhb exceeds 1, µg | No | No | No | |
| Barium (Ba), I. 1 µg | 1 | 1 | 1 | 1 |
| Barium (Ba), II.a Mbhb, µg (detected) | 0.19 | 0.19 | 0.19 | 0.19 |
| Barium (Ba), II.b 5% of Mbh, µg | 0.06 | 0.02 | 0.03 | 0.04 |
| Barium (Ba), II final - lesser of II(a) or II(b), µg | 0.06 | 0.02 | 0.03 | 0.04 |
| Barium (Ba), Mbhb - greater of I or II, µg | **1.00** | **1.00** | **1.00** | **1.00** |
| Barium (Ba), Mbhb - final, µg | 0.19 | 0.19 | 0.19 | 0.19 |
| Barium (Ba), Mbh - Mfhb, µg | 1.09 | 0.28 | 0.47 | 0.61 |
| Barium (Ba), Mbh, blank corrected final, µg | **1.09** | **0.28** | **0.47** | **0.61** |

| | | | | |
|---|---|---|---|---|
| Beryllium (Be), µg | **0.03** | **0.03** | **0.03** | **0.03** |
| Beryllium (Be), Mmdl, µg | 0.026 | 0.025 | 0.025 | 0.025 |
| Beryllium (Be), If Mbhb exceeds 1, µg | No | No | No | |
| Beryllium (Be), I. 1 µg | 1 | 1 | 1 | 1 |
| Beryllium (Be), II.a Mbhb, µg (detected) | 0.00 | 0.00 | 0.00 | 0.00 |
| Beryllium (Be), II.b 5% of Mbh, µg | 0.00 | 0.00 | 0.00 | 0.00 |
| Beryllium (Be), II final - lesser of II(a) or II(b), µg | 0.00 | 0.00 | 0.00 | 0.00 |
| Beryllium (Be), Mbhb - greater of I or II, µg | **1.00** | **1.00** | **1.00** | **1.00** |
| Beryllium (Be), Mbhb - final, µg | 0.00 | 0.00 | 0.00 | 0.00 |
| Beryllium (Be), Mbh - Mfhb, µg | 0.03 | 0.03 | 0.03 | 0.03 |
| Beryllium (Be), Mbh, blank corrected final, µg | **0.03** | **0.03** | **0.03** | **0.03** |
| | | | | |
| Cadmium (Cd), µg | **0.05** | **0.75** | **0.05** | **0.28** |
| Cadmium (Cd), Mmdl, µg | 0.051 | 0.050 | 0.050 | 0.050 |
| Cadmium (Cd), If Mbhb exceeds 1, µg | No | No | No | |
| Cadmium (Cd), I. 1 µg | 1 | 1 | 1 | 1 |
| Cadmium (Cd), II.a Mbhb, µg (detected) | 0.00 | 0.00 | 0.00 | 0.00 |
| Cadmium (Cd), II.b 5% of Mbh, µg | 0.00 | 0.04 | 0.00 | 0.01 |
| Cadmium (Cd), II final - lesser of II(a) or II(b), µg | 0.00 | 0.00 | 0.00 | 0.00 |
| Cadmium (Cd), Mbhb - greater of I or II, µg | **1.00** | **1.00** | **1.00** | **1.00** |
| Cadmium (Cd), Mbhb - final, µg | 0.00 | 0.00 | 0.00 | 0.00 |
| Cadmium (Cd), Mbh - Mfhb, µg | 0.05 | 0.75 | 0.05 | 0.28 |
| Cadmium (Cd), Mbh, blank corrected final, µg | **0.05** | **0.75** | **0.05** | **0.28** |
| | | | | |
| Chromium (Cr), µg | **0.27** | **0.31** | **0.15** | **0.24** |
| Chromium (Cr), Mmdl, µg | 0.102 | 0.099 | 0.100 | 0.100 |
| Chromium (Cr), If Mbhb exceeds 1, µg | No | No | No | |
| Chromium (Cr), I. 1 µg | 1 | 1 | 1 | 1 |
| Chromium (Cr), II.a Mbhb, µg (detected) | 0.00 | 0.00 | 0.00 | 0.00 |
| Chromium (Cr), II.b 5% of Mbh, µg | 0.01 | 0.02 | 0.01 | 0.01 |
| Chromium (Cr), II final - lesser of II(a) or II(b), µg | 0.00 | 0.00 | 0.00 | 0.00 |
| Chromium (Cr), Mbhb - greater of I or II, µg | **1.00** | **1.00** | **1.00** | **1.00** |
| Chromium (Cr), Mbhb - final, µg | 0.00 | 0.00 | 0.00 | 0.00 |
| Chromium (Cr), Mbh - Mfhb, µg | 0.27 | 0.31 | 0.15 | 0.24 |
| Chromium (Cr), Mbh, blank corrected final, µg | **0.27** | **0.31** | **0.15** | **0.24** |
| | | | | |
| Cobalt (Co), µg | **0.30** | **0.10** | **0.14** | **0.18** |
| Cobalt (Co), Mmdl, µg | 0.064 | 0.062 | 0.062 | 0.063 |
| Cobalt (Co), If Mbhb exceeds 1, µg | No | No | No | |
| Cobalt (Co), I. 1 µg | 1 | 1 | 1 | 1 |
| Cobalt (Co), II.a Mbhb, µg (detected) | 0.00 | 0.00 | 0.00 | 0.00 |
| Cobalt (Co), II.b 5% of Mbh, µg | 0.02 | 0.01 | 0.01 | 0.01 |
| Cobalt (Co), II final - lesser of II(a) or II(b), µg | 0.00 | 0.00 | 0.00 | 0.00 |
| Cobalt (Co), Mbhb - greater of I or II, µg | **1.00** | **1.00** | **1.00** | **1.00** |
| Cobalt (Co), Mbhb - final, µg | 0.00 | 0.00 | 0.00 | 0.00 |
| Cobalt (Co), Mbh - Mfhb, µg | 0.30 | 0.10 | 0.14 | 0.18 |
| Cobalt (Co), Mbh, blank corrected final, µg | **0.30** | **0.10** | **0.14** | **0.18** |
| | | | | |
| Copper (Cu), µg | **0.64** | **1.00** | **0.89** | **0.84** |
| Copper (Cu), Mmdl, µg | 0.640 | 0.620 | 0.625 | 0.628 |
| Copper (Cu), If Mbhb exceeds 1, µg | No | No | No | |
| Copper (Cu), I. 1 µg | 1 | 1 | 1 | 1 |
| Copper (Cu), II.a Mbhb, µg (detected) | 0.00 | 0.00 | 0.00 | 0.00 |
| Copper (Cu), II.b 5% of Mbh, µg | 0.03 | 0.05 | 0.04 | 0.04 |
| Copper (Cu), II final - lesser of II(a) or II(b), µg | 0.00 | 0.00 | 0.00 | 0.00 |
| Copper (Cu), Mbhb - greater of I or II, µg | **1.00** | **1.00** | **1.00** | **1.00** |
| Copper (Cu), Mbhb - final, µg | 0.00 | 0.00 | 0.00 | 0.00 |
| Copper (Cu), Mbh - Mfhb, µg | 0.64 | 1.00 | 0.89 | 0.84 |
| Copper (Cu), Mbh, blank corrected final, µg | **0.64** | **1.00** | **0.89** | **0.84** |
| | | | | |
| Lead (Pb), µg | **0.64** | **0.62** | **0.63** | **0.63** |
| Lead (Pb), Mmdl, µg | 0.640 | 0.620 | 0.625 | 0.628 |
| Lead (Pb), If Mbhb exceeds 1, µg | No | No | No | |
| Lead (Pb), I. 1 µg | 1 | 1 | 1 | 1 |
| Lead (Pb), II.a Mbhb, µg (detected) | 0.00 | 0.00 | 0.00 | 0.00 |
| Lead (Pb), II.b 5% of Mbh, µg | 0.03 | 0.03 | 0.03 | 0.03 |
| Lead (Pb), II final - lesser of II(a) or II(b), µg | 0.00 | 0.00 | 0.00 | 0.00 |
| Lead (Pb), Mbhb - greater of I or II, µg | **1.00** | **1.00** | **1.00** | **1.00** |
| Lead (Pb), Mbhb - final, µg | 0.00 | 0.00 | 0.00 | 0.00 |
| Lead (Pb), Mbh - Mfhb, µg | 0.64 | 0.62 | 0.63 | 0.63 |
| Lead (Pb), Mbh, blank corrected final, µg | **0.64** | **0.62** | **0.63** | **0.63** |
| | | | | |
| Manganese (Mn), µg | **0.28** | **0.55** | **0.96** | **0.60** |
| Manganese (Mn), Mmdl, µg | 0.038 | 0.037 | 0.038 | 0.038 |
| Manganese (Mn), If Mbhb exceeds 1, µg | No | No | No | |
| Manganese (Mn), I. 1 µg | 1 | 1 | 1 | 1 |
| Manganese (Mn), II.a Mbhb, µg (detected) | 0.11 | 0.11 | 0.11 | 0.11 |
| Manganese (Mn), II.b 5% of Mbh, µg | 0.01 | 0.03 | 0.05 | 0.03 |
| Manganese (Mn), II final - lesser of II(a) or II(b), µg | 0.01 | 0.03 | 0.05 | 0.03 |
| Manganese (Mn), Mbhb - greater of I or II, µg | **1.00** | **1.00** | **1.00** | **1.00** |
| Manganese (Mn), Mbhb - final, µg | 0.11 | 0.11 | 0.11 | 0.11 |
| Manganese (Mn), Mbh - Mfhb, µg | 0.17 | 0.44 | 0.84 | 0.48 |
| Manganese (Mn), Mbh, blank corrected final, µg | **0.17** | **0.44** | **0.84** | **0.48** |

| | | | | |
|---|---|---|---|---|
| Nickel (Ni), µg | **0.38** | **0.37** | **0.38** | **0.38** |
| Nickel (Ni), Mmdl, µg | 0.384 | 0.372 | 0.375 | 0.377 |
| Nickel (Ni), If Mbhb exceeds 1, µg | No | No | No | |
| Nickel (Ni), I. 1 µg | 1 | 1 | 1 | 1 |
| Nickel (Ni), II.a Mbhb, µg (detected) | 0.00 | 0.00 | 0.00 | 0.00 |
| Nickel (Ni), II.b 5% of Mbh, µg | 0.02 | 0.02 | 0.02 | 0.02 |
| Nickel (Ni), II final - lesser of II(a) or II(b), µg | 0.00 | 0.00 | 0.00 | 0.00 |
| Nickel (Ni), Mbhb - greater of I or II, µg | **1.00** | **1.00** | **1.00** | **1.00** |
| Nickel (Ni), Mbhb - final, µg | 0.00 | 0.00 | 0.00 | 0.00 |
| Nickel (Ni), Mbh - Mfhb, µg | 0.38 | 0.37 | 0.38 | 0.38 |
| Nickel (Ni), Mbh, blank corrected final, µg | **0.38** | **0.37** | **0.38** | **0.38** |
| | | | | |
| Phosphorus (P), µg | **6.78** | **2.82** | **9.02** | **6.21** |
| Phosphorus (P), Mmdl, µg | 2.560 | 2.480 | 2.500 | 2.513 |
| Phosphorus (P), If Mbhb exceeds 1, µg | No | No | No | |
| Phosphorus (P), I. 1 µg | 1 | 1 | 1 | 1 |
| Phosphorus (P), II.a Mbhb, µg (detected) | 0.00 | 0.00 | 0.00 | 0.00 |
| Phosphorus (P), II.b 5% of Mbh, µg | 0.34 | 0.14 | 0.45 | 0.31 |
| Phosphorus (P), II final - lesser of II(a) or II(b), µg | 0.00 | 0.00 | 0.00 | 0.00 |
| Phosphorus (P), Mbhb - greater of I or II, µg | **1.00** | **1.00** | **1.00** | **1.00** |
| Phosphorus (P), Mbhb - final, µg | 0.00 | 0.00 | 0.00 | 0.00 |
| Phosphorus (P), Mbh - Mfhb, µg | 6.78 | 2.82 | 9.02 | 6.21 |
| Phosphorus (P), Mbh, blank corrected final, µg | **6.78** | **2.82** | **9.02** | **6.21** |
| | | | | |
| Selenium (Se), µg | **1.92** | **1.86** | **1.88** | **1.89** |
| Selenium (Se), Mmdl, µg | 1.920 | 1.860 | 1.880 | 1.887 |
| Selenium (Se), If Mbhb exceeds 1, µg | No | No | No | |
| Selenium (Se), I. 1 µg | 1 | 1 | 1 | 1 |
| Selenium (Se), II.a Mbhb, µg (detected) | 0.00 | 0.00 | 0.00 | 0.00 |
| Selenium (Se), II.b 5% of Mbh, µg | 0.10 | 0.09 | 0.09 | 0.09 |
| Selenium (Se), II final - lesser of II(a) or II(b), µg | 0.00 | 0.00 | 0.00 | 0.00 |
| Selenium (Se), Mbhb - greater of I or II, µg | **1.00** | **1.00** | **1.00** | **1.00** |
| Selenium (Se), Mbhb - final, µg | 0.00 | 0.00 | 0.00 | 0.00 |
| Selenium (Se), Mbh - Mfhb, µg | 1.92 | 1.86 | 1.88 | 1.89 |
| Selenium (Se), Mbh, blank corrected final, µg | **1.92** | **1.86** | **1.88** | **1.89** |
| | | | | |
| Silver (Ag), µg | **0.37** | **0.25** | **0.25** | **0.29** |
| Silver (Ag), Mmdl, µg | 0.256 | 0.248 | 0.250 | 0.251 |
| Silver (Ag), If Mbhb exceeds 1, µg | No | No | No | |
| Silver (Ag), I. 1 µg | 1 | 1 | 1 | 1 |
| Silver (Ag), II.a Mbhb, µg (detected) | 0.00 | 0.00 | 0.00 | 0.00 |
| Silver (Ag), II.b 5% of Mbh, µg | 0.02 | 0.01 | 0.01 | 0.01 |
| Silver (Ag), II final - lesser of II(a) or II(b), µg | 0.00 | 0.00 | 0.00 | 0.00 |
| Silver (Ag), Mbhb - greater of I or II, µg | **1.00** | **1.00** | **1.00** | **1.00** |
| Silver (Ag), Mbhb - final, µg | 0.00 | 0.00 | 0.00 | 0.00 |
| Silver (Ag), Mbh - Mfhb, µg | 0.37 | 0.25 | 0.25 | 0.29 |
| Silver (Ag), Mbh, blank corrected final, µg | **0.37** | **0.25** | **0.25** | **0.29** |
| | | | | |
| Thallium (Tl), µg | **1.28** | **1.24** | **1.25** | **1.26** |
| Thallium (Tl), Mmdl, µg | 1.280 | 1.240 | 1.250 | 1.257 |
| Thallium (Tl), If Mbhb exceeds 1, µg | No | No | No | |
| Thallium (Tl), I. 1 µg | 1 | 1 | 1 | 1 |
| Thallium (Tl), II.a Mbhb, µg (detected) | 0.00 | 0.00 | 0.00 | 0.00 |
| Thallium (Tl), II.b 5% of Mbh, µg | 0.06 | 0.06 | 0.06 | 0.06 |
| Thallium (Tl), II final - lesser of II(a) or II(b), µg | 0.00 | 0.00 | 0.00 | 0.00 |
| Thallium (Tl), Mbhb - greater of I or II, µg | **1.00** | **1.00** | **1.00** | **1.00** |
| Thallium (Tl), Mbhb - final, µg | 0.00 | 0.00 | 0.00 | 0.00 |
| Thallium (Tl), Mbh - Mfhb, µg | 1.28 | 1.24 | 1.25 | 1.26 |
| Thallium (Tl), Mbh, blank corrected final, µg | **1.28** | **1.24** | **1.25** | **1.26** |
| | | | | |
| Zinc (Zn), µg | **5.14** | **19.10** | **3.21** | **9.15** |
| Zinc (Zn), Mmdl, µg | 0.384 | 0.372 | 0.375 | 0.377 |
| Zinc (Zn), If Mbhb exceeds 1, µg | No | No | No | |
| Zinc (Zn), I. 1 µg | 1 | 1 | 1 | 1 |
| Zinc (Zn), II.a Mbhb, µg (detected) | 0.00 | 0.00 | 0.00 | 0.00 |
| Zinc (Zn), II.b 5% of Mbh, µg | 0.26 | 0.96 | 0.16 | 0.46 |
| Zinc (Zn), II final - lesser of II(a) or II(b), µg | 0.00 | 0.00 | 0.00 | 0.00 |
| Zinc (Zn), Mbhb - greater of I or II, µg | **1.00** | **1.00** | **1.00** | **1.00** |
| Zinc (Zn), Mbhb - final, µg | 0.00 | 0.00 | 0.00 | 0.00 |
| Zinc (Zn), Mbh - Mfhb, µg | 5.14 | 19.10 | 3.21 | 9.15 |
| Zinc (Zn), Mbh, blank corrected final, µg | **5.14** | **19.10** | **3.21** | **9.15** |

## RESULTS SUMMARY

| | |
|---|---|
| Method | EPA 29 |
| Project No | 021372 |
| Client | Oregon DEQ |
| Unit / Location | ACI |
| Duct area, $ft^2$ | 0.785 |
| Reference temperature, °F | 68 |

| Test number | Run 1 | Run 2 | Run 3 | Average |
|---|---|---|---|---|
| Date | 5/24/23 | 5/25/23 | 5/25/23 | -- |
| Start / Stop time | 1418-1718 | 0852-1152 | 1305-1605 | -- |
| $O_2$, % volume dry | 15.59 | 15.03 | 15.45 | 15.35 |
| $CO_2$, % volume dry | 5.17 | 5.77 | 5.36 | 5.44 |
| Stack Temperature, °F | 809.6 | 1019.2 | 1034.6 | 954.4 |
| Moisture Content, % by volume | 7.75 | 10.40 | 8.52 | 8.89 |
| Stack Flow Rate, dscfm | 2,945 | 2,548 | 2,623 | 2,706 |
| Standard Sample Volume, dscf | 106.846 | 95.357 | 118.608 | 106.937 |

| | | | | | | | | |
|---|---|---|---|---|---|---|---|---|
| **Antimony (Sb)** | | | | | | | | |
| mg/dscm | ND | 2.12E-04 | ND | 2.30E-04 | ND | 1.86E-04 | ND | 2.09E-04 |
| lb/hr | ND | 2.33E-06 | ND | 2.19E-06 | ND | 1.83E-06 | ND | 2.12E-06 |
| lb/MMBtu | ND | 5.17E-07 | ND | 4.96E-07 | ND | 4.33E-07 | ND | 4.82E-07 |
| lb/tons of wood fuel | ND | 3.24E-06 | ND | 2.35E-06 | ND | 2.67E-06 | ND | 2.76E-06 |
| **Arsenic (As)** | | | | | | | | |
| mg/dscm | ND | 2.96E-04 | ND | 3.21E-04 | ND | 2.60E-04 | ND | 2.93E-04 |
| lb/hr | ND | 3.26E-06 | ND | 3.07E-06 | ND | 2.56E-06 | ND | 2.96E-06 |
| lb/MMBtu | ND | 7.24E-07 | ND | 6.94E-07 | ND | 6.06E-07 | ND | 6.75E-07 |
| lb/tons of wood fuel | ND | 4.53E-06 | ND | 3.30E-06 | ND | 3.74E-06 | ND | 3.86E-06 |
| **Barium (Ba)** | | | | | | | | |
| mg/dscm | ADL | 3.60E-04 | ADL | 1.04E-04 | ADL | 1.41E-04 | ADL | 2.01E-04 |
| lb/hr | ADL | 3.97E-06 | ADL | 9.89E-07 | ADL | 1.38E-06 | ADL | 2.11E-06 |
| lb/MMBtu | ADL | 8.80E-07 | ADL | 2.24E-07 | ADL | 3.27E-07 | ADL | 4.77E-07 |
| lb/tons of wood fuel | ADL | 5.51E-06 | ADL | 1.06E-06 | ADL | 2.02E-06 | ADL | 2.87E-06 |
| **Beryllium (Be)** | | | | | | | | |
| mg/dscm | ND | 8.59E-06 | ND | 9.26E-06 | ND | 7.44E-06 | ND | 8.43E-06 |
| lb/hr | ND | 9.47E-08 | ND | 8.83E-08 | ND | 7.31E-08 | ND | 8.54E-08 |
| lb/MMBtu | ND | 2.10E-08 | ND | 2.00E-08 | ND | 1.73E-08 | ND | 1.94E-08 |
| lb/tons of wood fuel | ND | 1.32E-07 | ND | 9.49E-08 | ND | 1.07E-07 | ND | 1.11E-07 |
| **Cadmium (Cd)** | | | | | | | | |
| mg/dscm | ND | 1.69E-05 | ADL | 2.79E-04 | ND | 1.49E-05 | DLL | 1.04E-04 |
| lb/hr | ND | 1.86E-07 | ADL | 2.66E-06 | ND | 1.46E-07 | DLL | 9.97E-07 |
| lb/MMBtu | ND | 4.12E-08 | ADL | 6.02E-07 | ND | 3.46E-08 | DLL | 2.26E-07 |
| lb/tons of wood fuel | ND | 2.58E-07 | ADL | 2.86E-06 | ND | 2.14E-07 | DLL | 1.11E-06 |
| **Chromium (Cr)** | | | | | | | | |
| mg/dscm | ADL | 8.76E-05 | ADL | 1.16E-04 | ADL | 4.35E-05 | ADL | 8.24E-05 |
| lb/hr | ADL | 9.65E-07 | ADL | 1.11E-06 | ADL | 4.27E-07 | ADL | 8.34E-07 |
| lb/MMBtu | ADL | 2.14E-07 | ADL | 2.51E-07 | ADL | 1.01E-07 | ADL | 1.89E-07 |
| lb/tons of wood fuel | ADL | 1.34E-06 | ADL | 1.19E-06 | ADL | 6.25E-07 | ADL | 1.05E-06 |
| **Cobalt (Co)** | | | | | | | | |
| mg/dscm | ADL | 9.95E-05 | ADL | 3.74E-05 | ADL | 4.17E-05 | ADL | 5.95E-05 |
| lb/hr | ADL | 1.10E-06 | ADL | 3.57E-07 | ADL | 4.09E-07 | ADL | 6.21E-07 |
| lb/MMBtu | ADL | 2.43E-07 | ADL | 8.07E-08 | ADL | 9.69E-08 | ADL | 1.40E-07 |
| lb/tons of wood fuel | ADL | 1.52E-06 | ADL | 3.84E-07 | ADL | 5.99E-07 | ADL | 8.35E-07 |
| **Copper (Cu)** | | | | | | | | |
| mg/dscm | ND | 2.12E-04 | ADL | 3.69E-04 | ADL | 2.66E-04 | DLL | 2.82E-04 |
| lb/hr | ND | 2.33E-06 | ADL | 3.52E-06 | ADL | 2.61E-06 | DLL | 2.82E-06 |
| lb/MMBtu | ND | 5.17E-07 | ADL | 7.97E-07 | ADL | 6.17E-07 | DLL | 6.44E-07 |
| lb/tons of wood fuel | ND | 3.24E-06 | ADL | 3.79E-06 | ADL | 3.82E-06 | DLL | 3.61E-06 |
| **Lead (Pb)** | | | | | | | | |
| mg/dscm | ND | 2.12E-04 | ND | 2.30E-04 | ND | 1.86E-04 | ND | 2.09E-04 |
| lb/hr | ND | 2.33E-06 | ND | 2.19E-06 | ND | 1.83E-06 | ND | 2.12E-06 |
| lb/MMBtu | ND | 5.17E-07 | ND | 4.96E-07 | ND | 4.33E-07 | ND | 4.82E-07 |
| lb/tons of wood fuel | ND | 3.24E-06 | ND | 2.35E-06 | ND | 2.67E-06 | ND | 2.76E-06 |
| **Manganese (Mn)** | | | | | | | | |
| mg/dscm | ADL | 5.55E-05 | ADL | 1.61E-04 | ADL | 2.51E-04 | ADL | 1.56E-04 |
| lb/hr | ADL | 6.12E-07 | ADL | 1.54E-06 | ADL | 2.46E-06 | ADL | 1.54E-06 |
| lb/MMBtu | ADL | 1.36E-07 | ADL | 3.48E-07 | ADL | 5.84E-07 | ADL | 3.56E-07 |
| lb/tons of wood fuel | ADL | 8.50E-07 | ADL | 1.65E-06 | ADL | 3.61E-06 | ADL | 2.04E-06 |
| **Nickel (Ni)** | | | | | | | | |
| mg/dscm | ND | 1.27E-04 | ND | 1.38E-04 | ND | 1.12E-04 | ND | 1.25E-04 |
| lb/hr | ND | 1.40E-06 | ND | 1.31E-06 | ND | 1.10E-06 | ND | 1.27E-06 |
| lb/MMBtu | ND | 3.10E-07 | ND | 2.97E-07 | ND | 2.60E-07 | ND | 2.89E-07 |
| lb/tons of wood fuel | ND | 1.94E-06 | ND | 1.41E-06 | ND | 1.60E-06 | ND | 1.65E-06 |
| **Phosphorus (P)** | | | | | | | | |
| mg/dscm | ADL | 2.24E-03 | ADL | 1.04E-03 | ADL | 2.69E-03 | ADL | 1.99E-03 |
| lb/hr | ADL | 2.47E-05 | ADL | 9.96E-06 | ADL | 2.64E-05 | ADL | 2.03E-05 |
| lb/MMBtu | ADL | 5.48E-06 | ADL | 2.25E-06 | ADL | 6.24E-06 | ADL | 4.66E-06 |
| lb/tons of wood fuel | ADL | 3.43E-05 | ADL | 1.07E-05 | ADL | 3.86E-05 | ADL | 2.79E-05 |

## RESULTS SUMMARY

| | |
|---|---|
| Method | EPA 29 |
| Project No | 021372 |
| Client | Oregon DEQ |
| Unit / Location | ACI |
| Duct area, $ft^2$ | 0.785 |
| Reference temperature, °F | 68 |

| Test number | Run 1 | Run 2 | Run 3 | Average |
|---|---|---|---|---|
| Date | 5/24/23 | 5/25/23 | 5/25/23 | -- |
| Start / Stop time | 1418-1718 | 0852-1152 | 1305-1605 | -- |
| $O_2$, % volume dry | 15.59 | 15.03 | 15.45 | 15.35 |
| $CO_2$, % volume dry | 5.17 | 5.77 | 5.36 | 5.44 |
| Stack Temperature, °F | 809.6 | 1019.2 | 1034.6 | 954.4 |
| Moisture Content, % by volume | 7.75 | 10.40 | 8.52 | 8.89 |
| Stack Flow Rate, dscfm | 2,945 | 2,548 | 2,623 | 2,706 |
| Standard Sample Volume, dscf | 106.846 | 95.357 | 118.608 | 106.937 |

| | | | | | | | | |
|---|---|---|---|---|---|---|---|---|
| Selenium (Se) | | | | | | | | |
| mg/dscm | ND | 6.35E-04 | ND | 6.89E-04 | ND | 5.60E-04 | ND | 6.28E-04 |
| lb/hr | ND | 6.99E-06 | ND | 6.57E-06 | ND | 5.50E-06 | ND | 6.35E-06 |
| lb/MMBtu | ND | 1.55E-06 | ND | 1.49E-06 | ND | 1.30E-06 | ND | 1.45E-06 |
| lb/tons of wood fuel | ND | 9.71E-06 | ND | 7.06E-06 | ND | 8.04E-06 | ND | 8.27E-06 |
| Silver (Ag) | | | | | | | | |
| mg/dscm | ADL | 1.22E-04 | ND | 9.18E-05 | ND | 7.44E-05 | DLL | 9.61E-05 |
| lb/hr | ADL | 1.34E-06 | ND | 8.76E-07 | ND | 7.31E-07 | DLL | 9.84E-07 |
| lb/MMBtu | ADL | 2.98E-07 | ND | 1.98E-07 | ND | 1.73E-07 | DLL | 2.23E-07 |
| lb/tons of wood fuel | ADL | 1.87E-06 | ND | 9.42E-07 | ND | 1.07E-06 | DLL | 1.29E-06 |
| Thallium (Tl) | | | | | | | | |
| mg/dscm | ND | 4.23E-04 | ND | 4.59E-04 | ND | 3.72E-04 | ND | 4.18E-04 |
| lb/hr | ND | 4.66E-06 | ND | 4.38E-06 | ND | 3.65E-06 | ND | 4.23E-06 |
| lb/MMBtu | ND | 1.03E-06 | ND | 9.91E-07 | ND | 8.65E-07 | ND | 9.64E-07 |
| lb/tons of wood fuel | ND | 6.48E-06 | ND | 4.71E-06 | ND | 5.35E-06 | ND | 5.51E-06 |
| Zinc (Zn) | | | | | | | | |
| mg/dscm | ADL | 1.70E-03 | ADL | 7.07E-03 | ADL | 9.56E-04 | ADL | 3.24E-03 |
| lb/hr | ADL | 1.87E-05 | ADL | 6.75E-05 | ADL | 9.38E-06 | ADL | 3.19E-05 |
| lb/MMBtu | ADL | 4.15E-06 | ADL | 1.53E-05 | ADL | 2.22E-06 | ADL | 7.22E-06 |
| lb/tons of wood fuel | ADL | 2.60E-05 | ADL | 7.25E-05 | ADL | 1.37E-05 | ADL | 3.74E-05 |

## LAB DATA SUMMARY

| | |
|---|---|
| Method | EPA 29 |
| Project No. | 021372 |
| Client | Oregon DEQ |
| Unit / Location | ACI |
| Duct area, $ft^2$ | 0.785 |
| Reference temperature, °F | 68 |

| | Run 1 | | Run 2 | | Run 3 | | Average |
|---|---|---|---|---|---|---|---|
| Test number | | | | | | | |
| Date | 5/24/23 | | 5/25/23 | | 5/25/23 | | -- |
| Start / Stop time | 1418-1718 | | 0852-1152 | | 1305-1605 | | -- |
| Antimony (Sb), fh blank corrected, µg | ND | 1.25 | ND | 1.25 | ND | 1.25 | ND | 1.25 |
| Antimony (Sb) bh blank corrected, µg | ND | 0.64 | ND | 0.62 | ND | 0.63 | ND | 0.63 |
| Antimony (Sb) total, µg | ND | 1.89 | ND | 1.87 | ND | 1.88 | ND | 1.88 |
| Arsenic (As), fh blank corrected, µg | ADL | 11.70 | ADL | 9.03 | ADL | 10.70 | ADL | 10.48 |
| Arsenic (As) bh blank corrected, µg | ND | 0.90 | ND | 0.87 | ND | 0.88 | ND | 0.88 |
| Arsenic (As) total, µg | DLL | 12.60 | DLL | 9.90 | DLL | 11.58 | DLL | 11.36 |
| Barium (Ba), fh blank corrected, µg | ADL | 330.9 | ADL | 259.9 | ADL | 298.9 | ADL | 296.5 |
| Barium (Ba) bh blank corrected, µg | ADL | 1.09 | ADL | 0.28 | ADL | 0.47 | ADL | 0.61 |
| Barium (Ba) total, µg | ADL | 331.9 | ADL | 260.1 | ADL | 299.3 | ADL | 297.1 |
| Beryllium (Be), fh blank corrected, µg | ADL | 0.53 | ADL | 0.22 | ADL | 1.03 | ADL | 0.59 |
| Beryllium (Be) bh blank corrected, µg | ND | 0.03 | ND | 0.03 | ND | 0.03 | ND | 0.03 |
| Beryllium (Be) total, µg | DLL | 0.56 | DLL | 0.25 | DLL | 1.06 | DLL | 0.62 |
| Cadmium (Cd), fh blank corrected, µg | ADL | 3.04 | ADL | 1.98 | ADL | 3.78 | ADL | 2.93 |
| Cadmium (Cd) bh blank corrected, µg | ND | 0.05 | ADL | 0.75 | ND | 0.05 | DLL | 0.28 |
| Cadmium (Cd) total, µg | DLL | 3.09 | ADL | 2.73 | DLL | 3.83 | DLL | 3.22 |
| Chromium (Cr), fh blank corrected, µg | ADL | 12.10 | ADL | 5.48 | ADL | 22.30 | ADL | 13.29 |
| Chromium (Cr) bh blank corrected, µg | ADL | 0.27 | ADL | 0.31 | ADL | 0.15 | ADL | 0.24 |
| Chromium (Cr) total, µg | ADL | 12.37 | ADL | 5.79 | ADL | 22.45 | ADL | 13.54 |
| Cobalt (Co), fh blank corrected, µg | ADL | 5.32 | ADL | 2.20 | ADL | 9.67 | ADL | 5.73 |
| Cobalt (Co) bh blank corrected, µg | ADL | 0.30 | ADL | 0.10 | ADL | 0.14 | ADL | 0.18 |
| Cobalt (Co) total, µg | ADL | 5.62 | ADL | 2.30 | ADL | 9.81 | ADL | 5.91 |
| Copper (Cu), fh blank corrected, µg | ADL | 407.6 | ADL | 239.6 | ADL | 687.6 | ADL | 445.0 |
| Copper (Cu) bh blank corrected, µg | ND | 0.64 | ADL | 1.00 | ADL | 0.89 | DLL | 0.84 |
| Copper (Cu) total, µg | DLL | 408.3 | ADL | 240.6 | ADL | 688.5 | DLL | 445.8 |
| Lead (Pb), fh blank corrected, µg | ADL | 30.65 | ADL | 15.85 | ADL | 39.15 | ADL | 28.55 |
| Lead (Pb) bh blank corrected, µg | ND | 0.64 | ND | 0.62 | ND | 0.63 | ND | 0.63 |
| Lead (Pb) total, µg | DLL | 31.29 | DLL | 16.47 | DLL | 39.78 | DLL | 29.18 |
| Manganese (Mn), fh blank corrected, µg | ADL | 381.1 | ADL | 176.1 | ADL | 635.1 | ADL | 397.5 |
| Manganese (Mn) bh blank corrected, µg | ADL | 0.17 | ADL | 0.44 | ADL | 0.84 | ADL | 0.48 |
| Manganese (Mn) total, µg | ADL | 381.3 | ADL | 176.6 | ADL | 636.0 | ADL | 397.9 |
| Mercury (Hg), total blank corrected, µg | DLL | 1.144 | DLL | 1.01 | DLL | 1.90 | DLL | 1.35 |
| Nickel (Ni), fh blank corrected, µg | ADL | 2.20 | ND | 0.75 | ADL | 7.70 | DLL | 3.55 |
| Nickel (Ni) bh blank corrected, µg | ND | 0.38 | ND | 0.37 | ND | 0.38 | ND | 0.38 |
| Nickel (Ni) total, µg | DLL | 2.58 | ND | 1.12 | DLL | 8.08 | DLL | 3.93 |
| Phosphorus (P), fh blank corrected, µg | ADL | 7,544.3 | ADL | 4,484.3 | ADL | 12,694.3 | ADL | 8,240.9 |
| Phosphorus (P) bh blank corrected, µg | ADL | 6.78 | ADL | 2.82 | ADL | 9.02 | ADL | 6.21 |
| Phosphorus (P) total, µg | ADL | 7,551.0 | ADL | 4,487.1 | ADL | 12,703.3 | ADL | 8,247.1 |
| Selenium (Se), fh blank corrected, µg | ND | 3.75 | ND | 3.75 | ND | 3.75 | ND | 3.75 |
| Selenium (Se) bh blank corrected, µg | ND | 1.92 | ND | 1.86 | ND | 1.88 | ND | 1.89 |
| Selenium (Se) total, µg | ND | 5.67 | ND | 5.61 | ND | 5.63 | ND | 5.64 |
| Silver (Ag), fh blank corrected, µg | ADL | 2.64 | ADL | 2.10 | ADL | 3.19 | ADL | 2.64 |
| Silver (Ag) bh blank corrected, µg | ADL | 0.37 | ND | 0.25 | ND | 0.25 | DLL | 0.29 |
| Silver (Ag) total, µg | ADL | 3.01 | DLL | 2.35 | DLL | 3.44 | DLL | 2.93 |
| Thallium (Tl), fh blank corrected, µg | ADL | 0.52 | ADL | 0.34 | ADL | 0.75 | ADL | 0.54 |
| Thallium (Tl) bh blank corrected, µg | ND | 1.28 | ND | 1.24 | ND | 1.25 | ND | 1.26 |
| Thallium (Tl) total, µg | DLL | 1.80 | DLL | 1.58 | DLL | 2.00 | DLL | 1.79 |
| Zinc (Zn), fh blank corrected, µg | ADL | 1,729.3 | ADL | 1,509.3 | ADL | 3,259.3 | ADL | 2,165.9 |
| Zinc (Zn) bh blank corrected, µg | ADL | 5.14 | ADL | 19.10 | ADL | 3.21 | ADL | 9.15 |
| Zinc (Zn) total, µg | ADL | 1,734.4 | ADL | 1,528.4 | ADL | 3,262.5 | ADL | 2,175.1 |

## RESULTS SUMMARY

| | |
|---|---|
| Method | EPA 29 |
| Project No | 021372 |
| Client | Oregon DEQ |
| Unit / Location | ACI |
| Duct area, $ft^2$ | 0.785 |
| Reference temperature, °F | 68 |

| | Run 1 | Run 2 | Run 3 | Average |
|---|---|---|---|---|
| Test number | | | | |
| Date | 5/24/23 | 5/25/23 | 5/25/23 | -- |
| Start / Stop time | 1418-1718 | 0852-1152 | 1305-1605 | -- |
| $O_2$, % volume dry | 15.59 | 15.03 | 15.45 | 15.35 |
| $CO_2$, % volume dry | 5.17 | 5.77 | 5.36 | 5.44 |
| Stack Temperature, °F | 809.6 | 1019.2 | 1034.6 | 954.4 |
| Moisture Content, % by volume | 7.75 | 10.40 | 8.52 | 8.89 |
| Stack Flow Rate, dscfm | 2,945 | 2,548 | 2,623 | 2,706 |
| Standard Sample Volume, dscf | 106.846 | 95.357 | 118.608 | 106.937 |

| | | | | | | | | |
|---|---|---|---|---|---|---|---|---|
| **Antimony (Sb)** | | | | | | | | |
| mg/dscm | ND | 6.25E-04 | ND | 6.92E-04 | ND | 5.58E-04 | ND | 6.25E-04 |
| lb/hr | ND | 6.88E-06 | ND | 6.60E-06 | ND | 5.48E-06 | ND | 6.32E-06 |
| lb/MMBtu | ND | 1.53E-06 | ND | 1.49E-06 | ND | 1.30E-06 | ND | 1.44E-06 |
| lb/tons of wood fuel | ND | 9.56E-06 | ND | 7.10E-06 | ND | 8.02E-06 | ND | 8.23E-06 |
| **Arsenic (As)** | | | | | | | | |
| mg/dscm | DLL | 4.16E-03 | DLL | 3.67E-03 | DLL | 3.45E-03 | DLL | 3.76E-03 |
| lb/hr | DLL | 4.59E-05 | DLL | 3.50E-05 | DLL | 3.38E-05 | DLL | 3.82E-05 |
| lb/MMBtu | DLL | 1.02E-05 | DLL | 7.91E-06 | DLL | 8.01E-06 | DLL | 8.70E-06 |
| lb/tons of wood fuel | DLL | 6.37E-05 | DLL | 3.76E-05 | DLL | 4.95E-05 | DLL | 5.03E-05 |
| **Barium (Ba)** | | | | | | | | |
| mg/dscm | ADL | 1.10E-01 | ADL | 9.63E-02 | ADL | 8.91E-02 | ADL | 9.84E-02 |
| lb/hr | ADL | 1.21E-03 | ADL | 9.19E-04 | ADL | 8.75E-04 | ADL | 1.00E-03 |
| lb/MMBtu | ADL | 2.68E-04 | ADL | 2.08E-04 | ADL | 2.07E-04 | ADL | 2.28E-04 |
| lb/tons of wood fuel | ADL | 1.68E-03 | ADL | 9.88E-04 | ADL | 1.28E-03 | ADL | 1.32E-03 |
| **Beryllium (Be)** | | | | | | | | |
| mg/dscm | DLL | 1.84E-04 | DLL | 9.15E-05 | DLL | 3.14E-04 | DLL | 1.97E-04 |
| lb/hr | DLL | 2.03E-06 | DLL | 8.72E-07 | DLL | 3.08E-06 | DLL | 2.00E-06 |
| lb/MMBtu | DLL | 4.51E-07 | DLL | 1.97E-07 | DLL | 7.30E-07 | DLL | 4.60E-07 |
| lb/tons of wood fuel | DLL | 2.82E-06 | DLL | 9.38E-07 | DLL | 4.51E-06 | DLL | 2.76E-06 |
| **Cadmium (Cd)** | | | | | | | | |
| mg/dscm | DLL | 1.02E-03 | ADL | 1.01E-03 | DLL | 1.14E-03 | DLL | 1.06E-03 |
| lb/hr | DLL | 1.13E-05 | ADL | 9.65E-06 | DLL | 1.12E-05 | DLL | 1.07E-05 |
| lb/MMBtu | DLL | 2.50E-06 | ADL | 2.18E-06 | DLL | 2.65E-06 | DLL | 2.44E-06 |
| lb/tons of wood fuel | DLL | 1.56E-05 | ADL | 1.04E-05 | DLL | 1.64E-05 | DLL | 1.41E-05 |
| **Chromium (Cr)** | | | | | | | | |
| mg/dscm | ADL | 4.09E-03 | ADL | 2.15E-03 | ADL | 6.68E-03 | ADL | 4.30E-03 |
| lb/hr | ADL | 4.50E-05 | ADL | 2.05E-05 | ADL | 6.56E-05 | ADL | 4.37E-05 |
| lb/MMBtu | ADL | 9.99E-06 | ADL | 4.63E-06 | ADL | 1.55E-05 | ADL | 1.01E-05 |
| lb/tons of wood fuel | ADL | 6.26E-05 | ADL | 2.20E-05 | ADL | 9.60E-05 | ADL | 6.02E-05 |
| **Cobalt (Co)** | | | | | | | | |
| mg/dscm | ADL | 1.86E-03 | ADL | 8.52E-04 | ADL | 2.92E-03 | ADL | 1.88E-03 |
| lb/hr | ADL | 2.05E-05 | ADL | 8.13E-06 | ADL | 2.87E-05 | ADL | 1.91E-05 |
| lb/MMBtu | ADL | 4.54E-06 | ADL | 1.84E-06 | ADL | 6.79E-06 | ADL | 4.39E-06 |
| lb/tons of wood fuel | ADL | 2.84E-05 | ADL | 8.74E-06 | ADL | 4.20E-05 | ADL | 2.64E-05 |
| **Copper (Cu)** | | | | | | | | |
| mg/dscm | DLL | 1.35E-01 | ADL | 8.91E-02 | ADL | 2.05E-01 | DLL | 1.43E-01 |
| lb/hr | DLL | 1.49E-03 | ADL | 8.50E-04 | ADL | 2.01E-03 | DLL | 1.45E-03 |
| lb/MMBtu | DLL | 3.30E-04 | ADL | 1.92E-04 | ADL | 4.77E-04 | DLL | 3.33E-04 |
| lb/tons of wood fuel | DLL | 2.07E-03 | ADL | 9.14E-04 | ADL | 2.95E-03 | DLL | 1.97E-03 |
| **Lead (Pb)** | | | | | | | | |
| mg/dscm | DLL | 1.03E-02 | DLL | 6.10E-03 | DLL | 1.18E-02 | DLL | 9.43E-03 |
| lb/hr | DLL | 1.14E-04 | DLL | 5.82E-05 | DLL | 1.16E-04 | DLL | 9.61E-05 |
| lb/MMBtu | DLL | 2.53E-05 | DLL | 1.32E-05 | DLL | 2.75E-05 | DLL | 2.20E-05 |
| lb/tons of wood fuel | DLL | 1.58E-04 | DLL | 6.26E-05 | DLL | 1.70E-04 | DLL | 1.30E-04 |
| **Manganese (Mn)** | | | | | | | | |
| mg/dscm | ADL | 1.26E-01 | ADL | 6.54E-02 | ADL | 1.89E-01 | ADL | 1.27E-01 |
| lb/hr | ADL | 1.39E-03 | ADL | 6.24E-04 | ADL | 1.86E-03 | ADL | 1.29E-03 |
| lb/MMBtu | ADL | 3.08E-04 | ADL | 1.41E-04 | ADL | 4.40E-04 | ADL | 2.97E-04 |
| lb/tons of wood fuel | ADL | 1.93E-03 | ADL | 6.71E-04 | ADL | 2.72E-03 | ADL | 1.77E-03 |
| **Mercury (Hg)** | | | | | | | | |
| mg/dscm | DLL | 3.78E-04 | DLL | 3.72E-04 | DLL | 5.64E-04 | DLL | 4.38E-04 |
| lb/hr | DLL | 4.17E-06 | DLL | 3.55E-06 | DLL | 5.54E-06 | DLL | 4.42E-06 |
| lb/MMBtu | DLL | 9.25E-07 | DLL | 8.04E-07 | DLL | 1.31E-06 | DLL | 1.01E-06 |
| lb/tons of wood fuel | DLL | 5.79E-06 | DLL | 3.82E-06 | DLL | 8.11E-06 | DLL | 5.90E-06 |
| **Nickel (Ni)** | | | | | | | | |
| mg/dscm | DLL | 8.54E-04 | ND | 4.15E-04 | DLL | 2.40E-03 | DLL | 1.22E-03 |
| lb/hr | DLL | 9.41E-06 | ND | 3.96E-06 | DLL | 2.36E-05 | DLL | 1.23E-05 |
| lb/MMBtu | DLL | 2.09E-06 | ND | 8.97E-07 | DLL | 5.59E-06 | DLL | 2.86E-06 |
| lb/tons of wood fuel | DLL | 1.31E-05 | ND | 4.26E-06 | DLL | 3.45E-05 | DLL | 1.73E-05 |

## RESULTS SUMMARY

| | |
|---|---|
| Method | EPA 29 |
| Project No | 021372 |
| Client | Oregon DEQ |
| Unit / Location | ACI |
| Duct area, $ft^2$ | 0.785 |
| Reference temperature, °F | 68 |

| Test number | Run 1 | Run 2 | Run 3 | Average |
|---|---|---|---|---|
| Date | 5/24/23 | 5/25/23 | 5/25/23 | -- |
| Start / Stop time | 1418-1718 | 0852-1152 | 1305-1605 | -- |
| $O_2$, % volume dry | 15.59 | 15.03 | 15.45 | 15.35 |
| $CO_2$, % volume dry | 5.17 | 5.77 | 5.36 | 5.44 |
| Stack Temperature, °F | 809.6 | 1019.2 | 1034.6 | 954.4 |
| Moisture Content, % by volume | 7.75 | 10.40 | 8.52 | 8.89 |
| Stack Flow Rate, dscfm | 2,945 | 2,548 | 2,623 | 2,706 |
| Standard Sample Volume, dscf | 106.846 | 95.357 | 118.608 | 106.937 |

| | | | | | | | | |
|---|---|---|---|---|---|---|---|---|
| Phosphorus (P) | | | | | | | | |
| mg/dscm | ADL | 2.50E+00 | ADL | 1.66E+00 | ADL | 3.78E+00 | ADL | 2.65E+00 |
| lb/hr | ADL | 2.75E-02 | ADL | 1.58E-02 | ADL | 3.71E-02 | ADL | 2.68E-02 |
| lb/MMBtu | ADL | 6.10E-03 | ADL | 3.59E-03 | ADL | 8.79E-03 | ADL | 6.16E-03 |
| lb/tons of wood fuel | ADL | 3.82E-02 | ADL | 1.70E-02 | ADL | 5.43E-02 | ADL | 3.65E-02 |
| Selenium (Se) | | | | | | | | |
| mg/dscm | ND | 1.87E-03 | ND | 2.08E-03 | ND | 1.68E-03 | ND | 1.88E-03 |
| lb/hr | ND | 2.07E-05 | ND | 1.98E-05 | ND | 1.65E-05 | ND | 1.90E-05 |
| lb/MMBtu | ND | 4.58E-06 | ND | 4.48E-06 | ND | 3.90E-06 | ND | 4.32E-06 |
| lb/tons of wood fuel | ND | 2.87E-05 | ND | 2.13E-05 | ND | 2.41E-05 | ND | 2.47E-05 |
| Silver (Ag) | | | | | | | | |
| mg/dscm | ADL | 9.94E-04 | DLL | 8.69E-04 | DLL | 1.02E-03 | DLL | 9.63E-04 |
| lb/hr | ADL | 1.10E-05 | DLL | 8.29E-06 | DLL | 1.01E-05 | DLL | 9.77E-06 |
| lb/MMBtu | ADL | 2.43E-06 | DLL | 1.88E-06 | DLL | 2.38E-06 | DLL | 2.23E-06 |
| lb/tons of wood fuel | ADL | 1.52E-05 | DLL | 8.92E-06 | DLL | 1.47E-05 | DLL | 1.30E-05 |
| Thallium (Tl) | | | | | | | | |
| mg/dscm | DLL | 5.94E-04 | DLL | 5.87E-04 | DLL | 5.95E-04 | DLL | 5.92E-04 |
| lb/hr | DLL | 6.55E-06 | DLL | 5.59E-06 | DLL | 5.84E-06 | DLL | 6.00E-06 |
| lb/MMBtu | DLL | 1.45E-06 | DLL | 1.27E-06 | DLL | 1.38E-06 | DLL | 1.37E-06 |
| lb/tons of wood fuel | DLL | 9.10E-06 | DLL | 6.02E-06 | DLL | 8.55E-06 | DLL | 7.89E-06 |
| Zinc (Zn) | | | | | | | | |
| mg/dscm | ADL | 5.73E-01 | ADL | 5.66E-01 | ADL | 9.71E-01 | ADL | 7.03E-01 |
| lb/hr | ADL | 6.32E-03 | ADL | 5.40E-03 | ADL | 9.54E-03 | ADL | 7.08E-03 |
| lb/MMBtu | ADL | 1.40E-03 | ADL | 1.22E-03 | ADL | 2.26E-03 | ADL | 1.63E-03 |
| lb/tons of wood fuel | ADL | 8.78E-03 | ADL | 5.80E-03 | ADL | 1.40E-02 | ADL | 9.51E-03 |

# Appendix A.13
# HAPs Calculations/Results

# SOURCE TEST DATA SUMMARY

| | | | | |
|---|---|---|---|---|
| Client | | | | Oregon DEQ |
| Unit / Location | | | | ACI |
| Test number | Run 1 | Run 2 | Run 3 | Average |
| Date | 5/24/2023 | 5/25/2023 | 5/25/2023 | -- |
| Start / Stop time | 1440-1755 | 0852-1152 | 1305-1605 | -- |
| **PROCESS DATA** | | | | |
| Fuel "F" factor @ 68°F, dscf/MMBtu | 9,960 | 9,729 | 9,729 | 9,806 |
| Wood fuel use, tons/hr | 0.720 | 0.930 | 0.683 | 0.778 |
| **VOLUMETRIC FLOW RATE** | | | | |
| Stack oxygen content, %vd | 15.59 | 15.03 | 15.45 | 15.36 |
| Stack flow rate, dscfm | 2,945 | 2,548 | 2,623 | 2,706 |
| **EMISSIONS** | | | | |
| **Impinger** | | | | |
| Acrolein, ppm volume dry | 0.243 | 0.058 | 0.521 | 0.274 |
| Acrolein, lb/hr | 6.26E-03 | 1.29E-03 | 1.19E-02 | 6.50E-03 |
| Acrolein, lb/MMBtu | 1.39E-03 | 2.92E-04 | 2.83E-03 | 1.50E-03 |
| Acrolein, lb/ton | 8.69E-03 | 1.39E-03 | 1.75E-02 | 9.18E-03 |
| **Canister** | | | | |
| Acrolein, ppm volume dry | 0.201 | 0.049 | 0.0498 | 0.0999 |
| Acrolein, lb/hr | 5.17E-03 | 1.09E-03 | 1.14E-03 | 2.47E-03 |
| Acrolein, lb/MMBtu | 1.15E-03 | 2.47E-04 | 2.70E-04 | 5.54E-04 |
| Acrolein, lb/ton | 7.18E-03 | 1.17E-03 | 1.67E-03 | 3.34E-03 |
| **Acrolein Total** | | | | |
| Acrolein, ppm volume dry | 0.4444 | 0.1070 | 0.5712 | 0.3742 |
| Acrolein, lb/hr | 1.14E-02 | 2.38E-03 | 1.31E-02 | 8.96E-03 |
| Acrolein, lb/MMBtu | 2.53E-03 | 5.39E-04 | 3.10E-03 | 2.06E-03 |
| Acrolein, lb/ton | 1.59E-02 | 2.56E-03 | 1.91E-02 | 1.25E-02 |
| Formaldehyde, ppm volume dry | 2.27 | 1.60 | 9.16 | 4.34 |
| Formaldehyde, lb/hr | 3.13E-02 | 1.91E-02 | 1.12E-01 | 5.42E-02 |
| Formaldehyde, lb/MMBtu | 6.94E-03 | 4.32E-03 | 2.66E-02 | 1.26E-02 |
| Formaldehyde, lb/ton | 4.35E-02 | 2.05E-02 | 1.64E-01 | 7.61E-02 |
| Benzene, ppb volume dry | 745.0 | 755.5 | 151.0 | 550.5 |
| Benzene, ppm volume dry | 0.745 | 0.756 | 0.151 | 0.551 |
| Benzene, lb/hr | 2.67E-02 | 2.34E-02 | 4.82E-03 | 1.83E-02 |
| Benzene, lb/MMBtu | 5.92E-06 | 5.30E-06 | 1.14E-06 | 4.12E-06 |
| Benzene, lb/ton | 3.71E-02 | 2.52E-02 | 7.05E-03 | 2.31E-02 |

Note(s): Run 2 is the average of the duplicates Run 2A and 2B. Acrolein had both an impinger and canister sample.

# SOURCE TEST DATA SUMMARY

**NCASI 99.02**

| Oregon DEQ<br>ACI<br>5/24-5/25/23 | Symbol | Units | Run 1<br>**Liter Meter**<br>Normal | Run 2a<br>**Bubble Meter**<br>Normal | Run 2b<br><br>Duplicate | | Run 3a<br>**Bubble Meter**<br>Normal | Run 3B<br><br>Spike |
|---|---|---|---|---|---|---|---|---|
| Time, Starting | | | 14:40 | 8:52 | 8:52 | | 13:05 | 13:05 |
| Time, Ending | | | 17:55 | 11:52 | 11:52 | | 16:05 | 16:05 |
| Sum of Sample volumes | | dscf | | | | | | |
| Average Flow Rate (actual dry) | | ml/min | -- | 399.8 | 386.4 | | 420.6 | 436.7 |
| $B_{ws}$ (M4) | | | 0.0775 | 0.1040 | 0.1040 | | 0.0852 | 0.0852 |
| Temperature, Ambient/Canister | Ta | °F | 75.0 | 63.0 | 63.0 | | 76.0 | 76.0 |
| Time, Total sample | Ø | min | 180.0 | 180.0 | 180.0 | | 180.0 | 180.0 |
| Pressure, Barometric | Pbar | in Hg | 29.88 | 29.72 | 29.72 | | 29.72 | 29.72 |
| Meter Y | | | 0.9901 | -- | -- | | -- | -- |
| Total Volume, Gas sample (act dry) | | Liters | 72.254 | -- | -- | | -- | -- |
| Total Volume, Gas sample (act dry) | | ml | -- | 71,968 | 69,548 | | 75,701 | 78,599 |
| Total Volume, Gas sample | Vm | dcf | 2.552 | 2.542 | 2.456 | | 2.673 | 2.776 |
| Volume, Dry std gas sample | Vm(std) | dscf | 2.490 | 2.549 | 2.463 | | 2.616 | 2.716 |
| Volume, Dry std gas sample | Vm(std) | dscm | 0.07050 | 0.07217 | 0.06974 | | 0.07407 | 0.07691 |
| | | Liters | 70.50 | 72.17 | 69.74 | | 74.07 | 76.91 |
| ACROLEIN (Impinger) | | | | | | | | |
| Results | 56.06 | ug/sample | **40.0** | **<4.3** | **14.7** | | **90.0** | **118.0** |
| Concentration | | gm/dscm | 0.00057 | 0.00006 | 0.00021 | | 0.00122 | |
| ppmvd | | ppmv | 0.24 | 0.026 | 0.090 | | 0.521 | |
| Average | | ppmv | | 0.058 | | | 0.521 | |
| ACROLEIN (Canister) | | | | | | | | |
| Results, ppbvd (Canister) | 56.06 | ppbvd | **201.0** | **20.9** | **77.0** | | **49.8** | **825** |
| ppmvd (Canister) | | ppmv | 0.201 | 0.021 | 0.077 | | 0.050 | |
| Average | | ppmv | | 0.049 | | | 0.050 | |
| FORMALDEHYDE (Impinger) | | | | | | | | |
| Results | 30.03 | µg/sample | **200** | **89.6** | **192** | | **847** | **1,023** |
| Concentration | | gm/dscm | 0.00284 | 0.00124 | 0.00275 | | 0.01144 | |
| ppmvd | | ppmv | 2.27 | 0.99 | 2.21 | | 9.16 | |
| Average | | ppmv | | 1.60 | | | 9.16 | |
| BENZENE (Canister) | | | | | | | | |
| Results, ppbvd (Canister) | 78.00 | ppbvd | **745** | **451** | **1,060** | | **151** | **371** |
| ppbvd (Canister) | | ppmv | 0.745 | 0.451 | 1.060 | | 0.151 | |
| Average | | ppmv | | 0.756 | | | 0.151 | |

Note: Resulted denoted as < were reported at less than the Sample Reporting Limit (SRL) by the lab

Spike recoveries for Run 3B were calculated by the analytical lab and are included in the lab report

| | | Flow Rate A | Flow Rate A | Flow Rate B | Combined Flow | Flow Rate A | Flow Rate B |
|---|---|---|---|---|---|---|---|
| Orifice Readings, cc/min | 1 | | 393.2 | 382.2 | 797.1 | 401.6 | 417.0 |
| | 2 | | 392.6 | 382.0 | 793.6 | 399.7 | 412.7 |
| | 3 | | 392.5 | 381.4 | 796.2 | 397.8 | 403.8 |
| | 4 | | 392.8 | 381.4 | 799.9 | 397.0 | 409.5 |
| | 5 | | 409.8 | 381.3 | 792.6 | 398.0 | 410.2 |
| | 6 | | 404.0 | 391.7 | 883.9 | 441.5 | 462.5 |
| | 7 | | 402.7 | 392.4 | 884.3 | 442.1 | 462.9 |
| | 8 | | 403.4 | 390.6 | 885.0 | 442.0 | 463.1 |
| | 9 | | 403.6 | 389.7 | 886.2 | 442.7 | 462.7 |
| | 10 | | 403.6 | 391.1 | 885.6 | 443.2 | 462.2 |

| Oregon DEQ<br>ACI<br>NCASI 99.02 | | | | |
|---|---|---|---|---|
| DUPLICATE TRAIN | Acrolein (impinger)<br>56.06 | Acrolein (canister)<br>56.06 | Formaldehyde<br>30.03 | Benzene<br>78.00 |
| Normal Sample Train Sample Volume (dscf) (Run 2A | 2.549 | 2.549 | 2.549 | 2.549 |
| Duplicate Sample Train Sample Volume (dscf) (Run 2B | 2.463 | 2.463 | 2.463 | 2.463 |
| Concentration in Normal Train (ppmvd) | 0.0256 | 0.0209 | 0.995 | 0.451 |
| Concentration in Duplicate Train (ppmvd) | 0.0904 | 0.0770 | 2.205 | 1.060 |
| Concentration of Average (ppmvd) | 0.0580 | 0.0490 | 1.60 | 0.756 |
| Duplicate Difference | 111.8% | 114.6% | 75.7% | 80.6% |
| Calculation Duplicate Difference Criteria | ≤ 50% | ≤ 50% | ≤ 30% | ≤ 30% |
| Is Duplicate Criteria Met | **NO** | **NO** | **NO** | **NO** |

# Appendix A.14
# TO-15 Calculations/Results

# SOURCE TEST DATA SUMMARY

## TO-15 / 8260B

| | | | | |
|---|---|---|---|---|
| Client | | | | ODEQ |
| Unit / Location | | | | Air Curtain Incinerator |
| Reference temperature, °F | | | | 68 |
| Test number | Run 1 | Run 2 | Run 3 | Average |
| Date | 5/24/2023 | 5/25/2023 | 5/25/2023 | -- |
| Start / Stop time | 1418-1718 | 852-1152 | 1305-1605 | -- |
| **PROCESS DATA** | | | | |
| Fuel factor, dscf/MMBtu | 9,960 | 9,729 | 9,729 | 9,806 |
| Wood fuel used, tons/hr | 0.720 | 0.930 | 0.683 | 0.778 |
| Stack flow rate, dscf/min (EPA 29 train) | 2,945 | 2,548 | 2,623 | 2,706 |
| Stack $O_2$, % | 15.59 | 15.03 | 15.45 | 15.36 |
| **VOLUME** | | | | |
| Sample time, min | 180 | 180 | 180 | 180 |
| Sample volume, L | 6.0 | 6.0 | 6.0 | 6.0 |
| **MIDGET IMPINGERS** | | | | |
| Trichloroethene | | | | |
| Concentration (in liquid), µg/L | <0.50 | <0.50 | <0.50 | <0.50 |
| Sample volume, mL | 40.0 | 40.0 | 40.0 | 40.0 |
| Mass of analyte, µg/sample | < 0.020 | < 0.020 | < 0.020 | < 0.020 |
| Concentration (in exhaust gas), ppmv | <6.20E-04 | <6.20E-04 | <6.20E-04 | <6.20E-04 |
| Mass rate, lb/hr | <3.73E-05 | <3.23E-05 | <3.33E-05 | <3.43E-05 |
| Mass emissions, lb/MMBtu | <8.28E-06 | <7.32E-06 | <7.88E-06 | <7.83E-06 |
| Mass emissions, lb/ton wood fuel | <5.19E-05 | <3.47E-05 | <4.87E-05 | <4.51E-05 |
| Vinyl Acetate | | | | |
| Concentration (in liquid), µg/L | <50 | <50 | <50 | <50 |
| Sample volume, mL | 40.0 | 40.0 | 40.0 | 40.0 |
| Mass of analyte, µg/sample | <2.00 | <2.00 | <2.00 | < 2.00 |
| Concentration (in exhaust gas), ppmv | <0.095 | <0.095 | <0.095 | < 0.095 |
| Mass rate, lb/hr | <3.73E-03 | <3.23E-03 | <3.33E-03 | <3.43E-03 |
| Mass emissions, lb/MMBtu | <8.28E-04 | <7.32E-04 | <7.88E-04 | <7.83E-04 |
| Mass emissions, lb/ton wood fuel | <5.19E-03 | <3.47E-03 | <4.87E-03 | <4.51E-03 |
| **SUMMA CANISTERS** | | | | |
| Trichloroethene | | | | |
| $C_2HCl_3$ concentrations, ppbv | <2.0 | <0.80 | <0.96 | <1.25 |
| $C_2HCl_3$ mass emissions, lb/hr | <1.21E-04 | <4.17E-05 | <5.15E-05 | <7.12E-05 |
| $C_2HCl_3$ mass emissions, lb/MMBtu | <2.67E-02 | <9.45E-03 | <1.22E-02 | <1.61E-02 |
| $C_2HCl_3$ mass emissions, lb/ton wood fuel | <1.67E-04 | <4.48E-05 | <7.54E-05 | <9.59E-05 |
| Vinyl Acetate | | | | |
| $C_4H_6O_2$ concentrations, ppbv | <10.0 | <4.0 | <4.8 | <6.27 |
| $C_4H_6O_2$ mass emissions, lb/hr | <3.95E-04 | <1.37E-04 | <1.69E-04 | <2.33E-04 |
| $C_4H_6O_2$ mass emissions, lb/MMBtu | <8.76E-02 | <3.10E-02 | <4.00E-02 | <5.28E-02 |
| $C_4H_6O_2$ mass emissions, lb/ton wood fuel | <5.48E-04 | <1.47E-04 | <2.47E-04 | <3.14E-04 |
| **COMBINED EMISSIONS** | | | | |
| Trichloroethene | | | | |
| $C_2HCl_3$ concentrations, ppmv | <2.62E-03 | <1.42E-03 | <1.58E-03 | <1.87E-03 |
| $C_2HCl_3$ mass emissions, lb/hr | <1.58E-04 | <7.40E-05 | <8.48E-05 | <1.06E-04 |
| $C_2HCl_3$ mass emissions, lb/MMBtu | <2.67E-02 | <9.46E-03 | <1.22E-02 | <1.61E-02 |
| $C_2HCl_3$ mass emissions, lb/ton wood fuel | <2.19E-04 | <7.96E-05 | <1.24E-04 | <1.41E-04 |
| Vinyl Acetate | | | | |
| $C_4H_6O_2$ concentrations, ppmv | <1.05E-01 | <9.86E-02 | <9.94E-02 | <1.01E-01 |
| $C_4H_6O_2$ mass emissions, lb/hr | <4.13E-03 | <3.37E-03 | <3.50E-03 | <3.66E-03 |
| $C_4H_6O_2$ mass emissions, lb/MMBtu | <8.84E-02 | <3.17E-02 | <4.08E-02 | <5.36E-02 |
| $C_4H_6O_2$ mass emissions, lb/ton wood fuel | <5.73E-03 | <3.62E-03 | <5.12E-03 | <4.82E-03 |

Note(s): 6L Summa canisters were filled over 3 hrs using a flow controller provided by the lab. The stack gas passed through empty midget impingers before entering the Summa canister.

# Appendix A.15
# CO, NOx, $SO_2$, NMHC Calculations/Results

# SOURCE TEST DATA SUMMARY

| | | | | |
|---|---|---|---|---|
| Client | | | | Oregon DEQ |
| Unit / Location | | | | ACI |
| A (stack area), $ft^2$ | | | | 0.785 |
| Reference temperature, °F | | | | 68 |
| Test number | Run 1 | Run 2 | Run 3 | Average |
| Date | 5/23/2023 | 5/23/2023 | 5/24/2023 | -- |
| Start / Stop time | 0951-1310 | 1410-1727 | 0925-1242 | -- |
| **FUEL DATA** | | | | |
| Fuel "F" factor @ $T_{ref}$, dscf/MMBtu | 9,778 | 9,778 | 9,960 | 9,839 |
| Fuel loaded, tons/hr | 0.847 | 0.590 | 0.910 | 0.782 |
| **ANALYZER DATA** | | | | |
| $O_2$, % volume dry | 16.63 | 16.19 | 15.84 | 16.22 |
| $CO_2$, % volume dry | 4.18 | 4.57 | 5.00 | 4.58 |
| CO emissions, ppm volume dry | 1086.0 | 911.2 | 1043.7 | 1013.6 |
| $NO_X$ emissions, ppm volume dry | 65.21 | 68.94 | 72.89 | 69.01 |
| $SO_2$ emissions, ppm volume dry | 8.28 | 5.91 | 7.83 | 7.34 |
| **VOLUMETRIC FLOW RATE** | | | | |
| 1c $B_{ws}$ (moisture fraction), non-dimensional | 0.0802 | 0.0744 | 0.0931 | 0.0826 |
| Stack flow rate - based on pitot, dscfm | 2,976 | 2,855 | 2,653 | 2,828 |
| **EMISSIONS** | | | | |
| CO concentrations, ppm volume dry | 1,086.0 | 911.2 | 1,043.7 | 1,013.6 |
| 2e CO mass emissions, lb/hr | 14.09 | 11.35 | 12.08 | 12.51 |
| 2f CO mass emissions, lb/MMBtu (based on F factor) | 3.77 | 2.87 | 3.12 | 3.26 |
| CO mass emissions, lb/ton wood fuel | 16.65 | 19.23 | 13.27 | 16.38 |
| $NO_X$ concentrations, ppm volume dry | 65.21 | 68.94 | 72.89 | 69.01 |
| 2e $NO_X$ mass emissions, lb/hr as $NO_2$ | 1.390 | 1.410 | 1.385 | 1.395 |
| 2f $NO_X$ mass emissions, lb/MMBtu as $NO_2$ (F factor) | 0.372 | 0.357 | 0.358 | 0.362 |
| $NO_X$ mass emissions, lb/ton wood fuel | 1.642 | 2.390 | 1.522 | 1.851 |
| $SO_2$ concentrations, ppm volume dry | 8.28 | 5.91 | 7.83 | 7.34 |
| 2e $SO_2$ mass emissions, lb/hr | 0.246 | 0.168 | 0.207 | 0.207 |
| 2f $SO_2$ mass emissions, lb/MMBtu (F factor) | 0.066 | 0.043 | 0.053 | 0.054 |
| $SO_2$ mass emissions, lb/ton wood fuel | 0.290 | 0.285 | 0.228 | 0.268 |

Note(s): Flow and moisture are from ODEQ 5 sample train data

# SOURCE TEST DATA SUMMARY

| | | | | |
|---|---|---|---|---|
| Client | | | | Oregon DEQ |
| Unit / Location | | | | ACI |
| A (stack area), $ft^2$ | | | | 0.785 |
| Reference temperature, °F | | | | 68 |
| Test number | Run 4 | Run 5 | Run 6 | Average |
| Date | 5/24/2023 | 5/25/2023 | 5/25/2023 | -- |
| Start / Stop time | 1418-1732 | 0852-1208 | 1308-1628 | -- |
| **FUEL DATA** | | | | |
| Fuel "F" factor @ $T_{ref}$, dscf/MMBtu | 9,960 | 9,729 | 9,729 | 9,806 |
| Fuel loaded, tons/hr | 0.720 | 0.930 | 0.683 | 0.778 |
| **ANALYZER DATA** | | | | |
| $O_2$, % volume dry | 15.59 | 15.03 | 15.45 | 15.35 |
| $CO_2$, % volume dry | 5.17 | 5.77 | 5.36 | 5.44 |
| CO emissions, ppm volume dry | 704.4 | 1077.8 | 649.8 | 810.7 |
| $NO_X$ emissions, ppm volume dry | 82.82 | 87.14 | 79.49 | 83.15 |
| $SO_2$ emissions, ppm volume dry | 5.31 | 8.48 | 5.48 | 6.42 |
| **VOLUMETRIC FLOW RATE** | | | | |
| 1c $B_{ws}$ (moisture fraction), non-dimensional | 0.0775 | 0.1040 | 0.0852 | 0.0889 |
| Stack flow rate - based on pitot, dscfm | 2,945 | 2,548 | 2,623 | 2,706 |
| **EMISSIONS** | | | | |
| CO concentrations, ppm volume dry | 704.4 | 1,077.8 | 649.8 | 810.7 |
| 2e CO mass emissions, lb/hr | 9.05 | 11.98 | 7.43 | 9.49 |
| 2f CO mass emissions, lb/MMBtu (based on F factor) | 2.01 | 2.71 | 1.76 | 2.16 |
| CO mass emissions, lb/ton wood fuel) | 12.57 | 12.88 | 10.88 | 12.11 |
| $NO_X$ concentrations, ppm volume dry | 82.82 | 87.14 | 79.49 | 83.15 |
| 2e $NO_X$ mass emissions, lb/hr as $NO_2$ | 1.747 | 1.591 | 1.494 | 1.611 |
| 2f $NO_X$ mass emissions, lb/MMBtu as $NO_2$ (F factor) | 0.388 | 0.360 | 0.354 | 0.367 |
| $NO_X$ mass emissions, lb/ton wood fuel | 2.43 | 1.71 | 2.19 | 2.11 |
| $SO_2$ concentrations, ppm volume dry | 5.31 | 8.48 | 5.48 | 6.42 |
| 2e $SO_2$ mass emissions, lb/hr | 0.156 | 0.216 | 0.143 | 0.172 |
| 2f $SO_2$ mass emissions, lb/MMBtu (F factor) | 0.035 | 0.049 | 0.034 | 0.039 |
| $SO_2$ mass emissions, lb/ton wood fuel | 0.217 | 0.232 | 0.210 | 0.219 |

Note(s): Flow and moisture are from EPA 29 sample train data

# SOURCE TEST DATA SUMMARY

| | | | | | |
|---|---|---|---|---|---|
| | Client | | | | Oregon DEQ |
| | Unit / Location | | | | ACI |
| | Stack area, square feet | | | | 0.785 |
| | Reference temperature, °F | | | | 68 |
| | Test number | Run 1 | Run 2 | Run 3 | Average |
| | Date | 5/23/2023 | 5/23/2023 | 5/24/2023 | -- |
| | Start / Stop time | 0951-1310 | 1410-1727 | 0925-1242 | -- |
| | **FUEL DATA** | | | | |
| | Fuel "F" factor @ $T_{ref}$, dscf/MMBtu | 9,778 | 9,778 | 9,960 | 9,839 |
| | Wood fuel loaded, tons/hr | 0.847 | 0.590 | 0.910 | 0.782 |
| | **ANALYZER DATA** | | | | |
| | $O_2$, % volume dry | 16.63 | 16.19 | 15.84 | 16.22 |
| | $CO_2$, % volume dry | 4.18 | 4.57 | 5.00 | 4.58 |
| | THC emissions as propane ppm volume wet | 89.86 | 74.79 | 87.15 | 83.93 |
| | Methane emissions as propane, ppm volume wet | 31.66 | 23.75 | 29.27 | 28.23 |
| | **VOLUMETRIC FLOW RATE** | | | | |
| 1c | Moisture fraction, nondimensional | 0.0802 | 0.0744 | 0.0931 | 0.0826 |
| 1j | Stack flow rate - based on pitot, dscfm | 2,976 | 2,855 | 2,653 | 2,828 |
| | **RESPONSE FACTOR** | | | | |
| | Methane Cylinder, ppmv $CH_4$ as Methane | 304.4 | 304.4 | 304.4 | -- |
| | Methane Response, ppmv $CH_4$ as Propane | 108.0 | 108.0 | 108.4 | -- |
| | $RF_M$ | 1.064 | 1.064 | 1.068 | -- |
| | **EMISSIONS** | | | | |
| | THC concentrations, ppm volume dry | 97.69 | 80.79 | 96.09 | 91.53 |
| 2e | THC mass emissions, lb/hr as Propane | 1.996 | 1.584 | 1.750 | 1.777 |
| 2f | THC mass emissions, lb/MMBtu as Propane | 0.534 | 0.401 | 0.452 | 0.463 |
| | THC mass emissions, lb/ton wood fuel | 2.358 | 2.685 | 1.924 | 2.322 |
| | $CH_4$ concentrations, ppm volume dry | 34.42 | 25.66 | 32.27 | 30.78 |
| | $CH_4$ concentrations, ppm volume dry (RF corrected) | 36.64 | 27.31 | 34.47 | 32.81 |
| 2e | $CH_4$ mass emissions, lb/hr as propane | 0.749 | 0.535 | 0.628 | 0.637 |
| 2f | $CH_4$ mass emissions, lb/MMBtu as propane | 0.200 | 0.136 | 0.162 | 0.166 |
| | $CH_4$ mass emissions, lb/ton wood fuel | 0.884 | 0.908 | 0.690 | 0.827 |
| | NMHC concentrations, ppm volume dry as propane | 61.06 | 53.48 | 61.62 | 58.72 |
| 2e | NMHC mass emissions, lb/hr as propane | 1.248 | 1.049 | 1.122 | 1.140 |
| 2f | NMHC mass emissions, lb/MMBtu, as propane | 0.334 | 0.266 | 0.290 | 0.297 |
| | NMHC mass emissions, lb/ton wood fuel | 1.473 | 1.777 | 1.233 | 1.4948 |

Note(s): Flow and moisture are from ODEQ 5 sample train data

# SOURCE TEST DATA SUMMARY

| | | | | |
|---|---|---|---|---|
| Client | | | | Oregon DEQ |
| Unit / Location | | | | ACI |
| Stack area, square feet | | | | 0.785 |
| Reference temperature, °F | | | | 68 |
| Test number | Run 4 | Run 5 | Run 6 | Average |
| Date | 5/24/2023 | 5/25/2023 | 5/25/2023 | -- |
| Start / Stop time | 1418-1732 | 0852-1208 | 1308-1628 | -- |
| **FUEL DATA** | | | | |
| Fuel "F" factor @ $T_{ref}$, dscf/MMBtu | 9,960 | 9,729 | 9,729 | 9,806 |
| Wood fuel loaded, tons/hr | 0.720 | 0.930 | 0.683 | 0.778 |
| **ANALYZER DATA** | | | | |
| $O_2$, % volume dry | 15.59 | 15.03 | 15.45 | 15.35 |
| $CO_2$, % volume dry | 5.17 | 5.77 | 5.36 | 5.44 |
| THC emissions as propane ppm volume wet | 46.23 | 68.81 | 41.90 | 52.31 |
| Methane emissions as propane, ppm volume wet | 15.65 | 25.83 | 14.27 | 18.58 |
| **VOLUMETRIC FLOW RATE** | | | | |
| 1c Moisture fraction, nondimensional | 0.0775 | 0.1040 | 0.0852 | 0.0889 |
| 1j Stack flow rate - based on pitot, dscfm | 2,945 | 2,548 | 2,623 | 2,706 |
| **RESPONSE FACTOR** | | | | |
| Methane Cylinder, ppmv $CH_4$ as Methane | 304.4 | 304.4 | 304.4 | -- |
| Methane Response, ppmv $CH_4$ as Propane | 108.4 | 108.0 | 108.0 | -- |
| $RF_M$ | 1.068 | 1.064 | 1.064 | -- |
| **EMISSIONS** | | | | |
| THC concentrations, ppm volume dry | 50.11 | 76.80 | 45.80 | 57.57 |
| 2e THC mass emissions, lb/hr as propane | 1.013 | 1.344 | 0.825 | 1.061 |
| 2f THC mass emissions, lb/MMBtu as propane | 0.225 | 0.304 | 0.195 | 0.241 |
| THC mass emissions, lb/ton wood fuel | 1.407 | 1.445 | 1.207 | 1.353 |
| $CH_4$ concentrations, ppm volume dry | 16.96 | 28.82 | 15.59 | 20.46 |
| $CH_4$ concentrations, ppm volume dry (RF corrected) | 18.12 | 30.68 | 16.60 | 21.80 |
| 2e $CH_4$ mass emissions, lb/hr as propane | 0.367 | 0.537 | 0.299 | 0.401 |
| 2f $CH_4$ mass emissions, lb/MMBtu as propane | 0.081 | 0.122 | 0.071 | 0.091 |
| $CH_4$ mass emissions, lb/ton wood fuel | 0.509 | 0.577 | 0.438 | 0.508 |
| NMHC concentrations, ppm volume dry | 31.98 | 46.12 | 29.20 | 35.77 |
| 2e NMHC mass emissions, lb/hr as propane | 0.647 | 0.807 | 0.526 | 0.660 |
| 2f NMHC mass emissions, lb/MMBtu as propane | 0.143 | 0.183 | 0.125 | 0.150 |
| NMHC mass emissions, lb/ton wood fuel | 0.898 | 0.868 | 0.770 | 0.845 |

Note(s): Flow and moisture are from EPA 29 sample train data

| Run Number | Run 1 | Run 2 | Run 3 | Run 4 | Run 5 | Run 6 | |
|---|---|---|---|---|---|---|---|
| Date | 5/23/2023 | 5/23/2023 | 5/24/2023 | 5/24/2023 | 5/25/2023 | 5/25/2023 | |
| Time | 0951-1310 | 1410-1727 | 0925-1242 | 1418-1732 | 0852-1208 | 1308-1628 | |
| | | | | | | | **Average** |
| CO, ppmvd | 1086.0 | 911.2 | 1043.7 | 704.4 | 1077.8 | 649.8 | **912.2** |
| CO, lb/hr | 14.09 | 11.35 | 12.08 | 9.05 | 11.98 | 7.43 | **11.00** |
| CO, lb/MMBtu | 3.77 | 2.87 | 3.12 | 2.01 | 2.71 | 1.76 | **2.71** |
| CO, lb/ton wood | 16.65 | 19.23 | 13.27 | 12.57 | 12.88 | 10.88 | **14.25** |
| NOx, ppmvd | 65.21 | 68.94 | 72.89 | 82.82 | 87.14 | 79.49 | **76.08** |
| NOx, lb/hr | 1.39 | 1.41 | 1.39 | 1.75 | 1.59 | 1.49 | **1.50** |
| NOx, lb/MMBtu | 0.372 | 0.357 | 0.358 | 0.388 | 0.360 | 0.354 | **0.365** |
| NOx, lb/ton wood | 1.64 | 2.39 | 1.52 | 2.43 | 1.71 | 2.19 | **1.98** |
| $SO_2$, ppmvd | 8.28 | 5.91 | 7.83 | 5.31 | 8.48 | 5.48 | **6.88** |
| $SO_2$, lb/hr | 0.246 | 0.168 | 0.207 | 0.156 | 0.216 | 0.143 | **0.189** |
| $SO_2$, lb/MMBtu | 0.066 | 0.043 | 0.053 | 0.035 | 0.049 | 0.034 | **0.046** |
| $SO_2$, lb/ton wood | 0.290 | 0.285 | 0.228 | 0.217 | 0.232 | 0.210 | **0.244** |
| THC, ppmvd | 97.69 | 80.79 | 96.09 | 50.11 | 76.80 | 45.80 | **74.55** |
| THC, lb/hr | 2.00 | 1.58 | 1.75 | 1.01 | 1.34 | 0.83 | **1.42** |
| THC, lb/MMBtu | 0.534 | 0.401 | 0.452 | 0.225 | 0.304 | 0.195 | **0.352** |
| THC, lb/ton wood | 2.36 | 2.68 | 1.92 | 1.41 | 1.45 | 1.21 | **1.84** |
| $CH_4$, ppmvd | 36.64 | 27.31 | 34.47 | 18.12 | 30.68 | 16.60 | **27.30** |
| $CH_4$, lb/hr | 0.749 | 0.535 | 0.628 | 0.367 | 0.537 | 0.299 | **0.519** |
| $CH_4$, lb/MMBtu | 0.200 | 0.136 | 0.162 | 0.081 | 0.122 | 0.071 | **0.129** |
| $CH_4$, lb/ton wood | 0.884 | 0.908 | 0.690 | 0.509 | 0.577 | 0.438 | **0.668** |
| NMHC, ppmvd | 61.06 | 53.48 | 61.62 | 31.98 | 46.12 | 29.20 | **47.24** |
| NMHC, lb/hr | 1.25 | 1.05 | 1.12 | 0.647 | 0.807 | 0.526 | **0.900** |
| NMHC, lb/MMBtu | 0.334 | 0.266 | 0.290 | 0.143 | 0.183 | 0.125 | **0.223** |
| NMHC, lb/ton wood | 1.47 | 1.78 | 1.23 | 0.898 | 0.868 | 0.770 | **1.17** |

# Appendix A.16
# Example Calculations

MONTROSE AIR QUALITY SERVICES

**EXAMPLE CALCULATIONS**
**STACK GAS VOLUMETRIC FLOW RATE**

| | | | |
|---|---|---|---|
| **Project name:** | ODEQ-ACI | **Project number:** | 006AS-021372 |
| **Computed by:** | A Little | **Calculation date:** | 2023-06-22 |
| **Run number:** | 1-ODEQ 5 | | |

**SAMPLE TRAIN DATA**

| | | |
|---|---|---|
| Meter calibration factor, $Y_d$ | 0.9953 | $Y$ |
| Stack area, square feet | 0.785 | $A_s$ |
| Pitot Coefficient | 0.84 | $C_p$ |
| Barometric pressure, in. Hg | 29.96 | $P_{bar}$ |
| Meter box volume, acf | 141.489 | $V_m$ |
| Impinger liquid volume, g | 259.4 | $V_{lc}$ |
| Meter temperature, °R | 533.5 | $T_m$ = (°F plus 460) |
| Meter pressure, (delta H) iwg | 2.025 | $\Delta H$ |
| Velocity head, (delta P) iwg | 3.5605 | $\Delta P$ |
| Static pressure, iwg | -7.00 | $P_{sg}$ |
| Stack temperature, °R | 1256.7 | $T_s$ = (°F plus 460) |
| Stack $O_2$, % volume dry | 16.63 | $O_2$ |
| Stack $CO_2$, % volume dry | 4.18 | $CO_2$ |
| Stack $N_2$, % volume dry | 79.19 | $N_2 = (100 - \%O_2 - \%CO_2)$ |
| Nozzle area, square feet | 0.000199 | $A_n = \pi (D_n / 2)^2 (1\ ft/ 12\ in)^2$ |
| PM sampling time, minutes | 180 | $\Theta$ |
| Reference temperature, °R | 528 | $T_{std}$ = (°F plus 460) |

***Note: The results calculated in the pages that follow may differ slightly from the results presented in the final report. This difference can be attributed to "significant digit round-off errors" common when comparing computer spreadsheets results with those derived from using a calculator.***

## 1 VOLUMETRIC FLOW RATE

### a. Standard sample gas volume, dscf

$$V_{m\,std} = 17.64 \times (V_m)(Y)\frac{\left[P_{bar} + \left(\frac{\Delta H}{13.6}\right)\right]}{(T_m)}$$

$$V_{m\,std} = \frac{17.64 \times (141.489)(0.9953)[29.96+(2.025)/(13.6)]}{533.5}$$

$V_{m\,std}$ = 140.196 dscf

### b. Water vapor volume, scf

$$V_{w\,std} = (0.04716)(V_{lc})\left(\frac{T_{std}}{528}\right)$$

$$V_{w\,std} = \frac{(0.04716)(259.4)(528)}{(528)}$$

$V_{w\,std}$ = 12.233 scf

### c. Moisture content, non-dimensional

$$B_{ws} = \left(\frac{V_{w\,std}}{V_{m\,std} + V_{w\,std}}\right)$$

$$B_{ws} = \frac{(12.233)}{(140.196 + 12.233)}$$

$B_{ws}$ = 0.0803 moisture content (multiply by 100 for % by volume)

**d. Stack gas molecular weight, lb/lb mole (dry)**

$MW_{dry}$ = [0.44(%$CO_2$)] + [0.32(%$O_2$)] + [0.28(%$N_2$)]

$MW_{dry}$ = [0.44(4.18)] + [0.32(16.63)] + [0.28(79.19)]

$MW_{dry}$ = 29.334 lb/lb mole

**e. Stack gas molecular weight, lb/lb mole (wet)**

$MW_{wet}$ = [$MW_{dry}$(1-$B_{ws}$)] + [18($B_{ws}$)]

$MW_{wet}$ = [29.334(1-0.0803)] + [18(0.0803)]

$MW_{wet}$ = 28.424 lb/lb mole

**f. Absolute stack pressure, in Hg**

$$P_s = P_{bar} + \left(\frac{P_{sg}}{13.6}\right)$$

$P_s$ = 29.96 + (-7/13.6)

$P_s$ = 29.445 in. Hg

**g. Stack velocity, ft/sec**

$$v_s = (85.49)(C_p)(\sqrt{\Delta P})\sqrt{\frac{T_s}{(P_s)(MW_{wet})}}$$

$v_s$ = $(85.49)(0.84)\sqrt{\frac{(3.5605)(1256.7)}{(29.445)(28.424)}}$

$v_s$ = 166.042 ft/sec

**h. Actual stack flow rate, acfm**

$$Q = (v_s)(A_s)(60\ min/hr)$$

Q = (166.042)(0.785)(60)

Q = 7,821 acfm

**i. Standard stack gas flow rate, wscfm**

$$Q_{ws} = (v_s)(A_s)(60\ min/hr)\left(\frac{T_{std}}{T_s}\right)\left(\frac{P_s}{P_{std}}\right)$$

$Q_{ws}$ = (166.042)(0.785)(60)(528/1256.7)(29.445/29.92)

$Q_{ws}$ = 3,234 wscfm

**j. Standard stack gas flow rate, dscfm**

$$Q_{ds} = (v_s)(A_s)(60\ min/hr)(1 - B_{ws})\left(\frac{T_{std}}{T_s}\right)\left(\frac{P_s}{P_{std}}\right)$$

$Q_{ds}$ = (166.042)(0.785)(60)(1-0.0803)(528/1256.7)(29.445/29.92)

$Q_{ds}$ = 2,974 dscfm

**k. Percent Isokinetic, %**

$$I = \frac{(T_s)(V_{m\ std})(P_{std})(100)}{(T_{std})(v_s)(\theta)(A_n)(P_s)(60)(1 - B_{ws})}$$

$$I = \frac{(1256.7)(140.196)(29.92)(100)}{(528)(166.042)(180)(0.000199)(29.445)(60)(1 - 0.0803)}$$

I = 103.3 %

**EXAMPLE CALCULATIONS**
**PARTICULATE MATTER EMISSIONS**

| | | | |
|---|---|---|---|
| **Project name:** | ODEQ | **Project number:** | PROJ-021372 |
| **Computed by:** | A Little | **Calculation date:** | 2023-07-27 |
| **Run number:** | 1 | | |

**EMISSIONS DATA**

| | | |
|---|---|---|
| Mass of collected particulate matter, mg | 972.96 | $G_m$ |
| Dry stack gas flow rate at standard conditions, dscfm | 2,976 | $Q_{ds}$ |
| Dry meter volume at standard conditions, dscf | 140.196 | $V_{m\,std}$ |

**1 PARTICULATE MATTER EMISSIONS**

**a. Grain loading, gr/dscf**

$$G = (0.0154)\left(\frac{G_m}{V_{m\,std}}\right)$$

$$G = (0.0154)\ \frac{(972.96)}{(140.196)}$$

$G =$ 0.1069 gr/dscf

***Note: The results calculated in the pages that follow may differ slightly from the results presented in the final report. This difference can be attributed to "significant digit round-off errors" common when comparing computer spreadsheets results with those derived from using a calculator.***

**b. Mass emission rate, lb/hr**

$$M = (G)(Q_{ds})\frac{(60\ min/hr)}{(7{,}000\ gr/lb)}$$

$$M = \frac{(0.1069)(2{,}976)(60)}{(7{,}000)}$$

M = 2.726 lb/hr

lb/MMBtu

$$lb/MMBtu = (G)\left(\frac{1\ lb}{7{,}000\ gr}\right)(Fd)\left(\frac{20.9}{20.9 - \%O_2}\right)$$

$$= 0.1069\ \frac{gr}{dscf} \times \frac{1\ lb}{7000\ gr} \times 9{,}778\ \frac{dscf}{MMBtu} \times \frac{20.9}{20.9 - 16.63}$$

$$= 0.731\ lb/MMBtu$$

lb/ton

$$lb/ton = \frac{lb/hr}{ton/hr\ fuel}$$

$$= \frac{2.726\ lb/hr}{0.847\ ton/hr}$$

$$= 3.218\ lb/ton\ fuel$$

**EXAMPLE CALCULATIONS**
**GASEOUS EMISSIONS**

| | | | |
|---|---|---|---|
| **Project name:** | ODEQ-ACI | **Project number:** | 006AS-021372 |
| **Computed by:** | A. Little | **Calculation date:** | 2023-07-27 |
| **Run number:** | 1 | **Gaseous Species:** | $NO_X$ |

**EMISSIONS DATA**

| | | |
|---|---|---|
| Reference temperature, °R | 528 | $T_{ref}$ = (°F plus 460) |
| Concentration of gaseous species, ppmvd | 65.2 | $C$ |
| Dry stack gas flow rate at standard conditions, dscfm | 2,976 | $Q_{ds}$ |
| Stack $O_2$, % volume dry | 16.63 | $O_2$ |
| "F" factor of fuel based on $O_2$, dscf/MMBtu @ 0% $O_2$ | 9,778 | $F_d$ |
| Molecular weight of gaseous species, lb/lb-mol | 46.01 | $MW_S$, where |

$MW_S$ = 28.01 for CO; 46.01 for $NO_X$ as $NO_2$; 64.06 for $SO_X$ as $SO_2$

| | | |
|---|---|---|
| Conversion factor from ppm to lb/scf | 1.19E-07 | $CF$ where |

1.194E-07 [(lb/scf) / ppm] for $NO_X$
1.660E-07 [(lb/scf) / ppm] for $SO_2$
1.194E-07 x $MW_x/MW_{NOX}$ [(lb/scf) / ppm] for other compounds (x)

**1 GASEOUS EMISSIONS**

***Note: The results calculated on these pages may differ slightly from the results presented in the final report. This difference can be attributed to "significant digit round-off errors" common when comparing computer spreadsheets results with those derived from using a calculator.***

**a. Mass emission rate, lb/hr**

$$M = (C)(CF)(Q_{ds})(60\ min/hr)$$

$M$ = (65.21)(1.19E-07)(2,976)(60)

$M$ = 1.39 lb/hr

**b. Emission rate, lb/MMBtu**

$$E = (C)(CF)(F_d)\left(\frac{20.9}{20.9 - \%O_2}\right)$$

$$E = \frac{(65.21)(1.19E\text{-}07)(9{,}778)(20.9)}{(20.9 - 16.63)}$$

$E$ = 0.3726 lb/MMBtu

**c. Mass emission rate, lb/ton**

$$M' = \frac{M}{P}$$ where P=0.847 tons/hr wood fuel

$M'$ = (1.39) / 0.847

$M'$ = 1.64 lb/ton

MONTROSE AIR QUALITY SERVICES

**EXAMPLE CALCULATIONS**
**GASEOUS EMISSIONS**

| | | | |
|---|---|---|---|
| **Project name:** | ODEQ-ACI | **Project number:** | 006AS-021372 |
| **Computed by:** | A. Little | **Calculation date:** | 2023-07-27 |
| **Run number:** | 1 | **Gaseous Species:** | SO2 |

**EMISSIONS DATA**

| | | |
|---|---|---|
| Reference temperature, °R | 528 | $T_{ref}$ = (°F plus 460) |
| Concentration of gaseous species, ppmvd | 8.3 | $C$ |
| Dry stack gas flow rate at standard conditions, dscfm | 2,976 | $Q_{ds}$ |
| Stack $O_2$, % volume dry | 16.63 | $O_2$ |
| "F" factor of fuel based on $O_2$, dscf/MMBtu @ 0% $O_2$ | 9,778 | $F_d$ |
| Molecular weight of gaseous species, lb/lb-mol | 64.06 | $MW_S$, where |

$MW_S$ = 28.01 for CO; 46.01 for $NO_X$ as $NO_2$; 64.06 for $SO_X$ as $SO_2$

| | | |
|---|---|---|
| Conversion factor from ppm to lb/scf | 1.66E-07 | $CF$ where |

1.194E-07 [(lb/scf) / ppm] for $NO_X$

1.660E-07 [(lb/scf) / ppm] for $SO_2$

1.194E-07 x $MW_x/MW_{NOX}$ [(lb/scf) / ppm] for other compounds (x)

## 1 GASEOUS EMISSIONS

***Note: The results calculated on these pages may differ slightly from the results presented in the final report. This difference can be attributed to "significant digit round-off errors" common when comparing computer spreadsheets results with those derived from using a calculator.***

### a. Mass emission rate, lb/hr

$$M = (C)(CF)(Q_{ds})(60\ min/hr)$$

$$M = (8.28)(1.66E\text{-}07)(2{,}976)(60)$$

$M$ = 0.246 lb/hr

### b. Emission rate, lb/MMBtu

$$E = (C)(CF)(F_d)\left(\frac{20.9}{20.9 - \%O_2}\right)$$

$$E = \frac{(8.28)(1.66E\text{-}07)(9{,}778)(20.9)}{(20.9 - 16.63)}$$

$E$ = 0.0659 lb/MMBtu

MONTROSE AIR QUALITY SERVICES

**EXAMPLE CALCULATIONS**
**GASEOUS EMISSIONS**

| | | | |
|---|---|---|---|
| **Project name:** | ODEQ-ACI | **Project number:** | 006AS-021372 |
| **Computed by:** | A. Little | **Calculation date:** | 2023-07-27 |
| **Run number:** | 1 | **Gaseous Species:** | CO |

**EMISSIONS DATA**

| | | |
|---|---|---|
| Reference temperature, °R | 528 | $T_{ref}$ = (°F plus 460) |
| Concentration of gaseous species, ppmvd | 1086.0 | $C$ |
| Dry stack gas flow rate at standard conditions, dscfm | 2,976 | $Q_{ds}$ |
| Stack $O_2$, % volume dry | 16.63 | $O_2$ |
| "F" factor of fuel based on $O_2$, dscf/MMBtu @ 0% $O_2$ | 9,778 | $F_d$ |
| Molecular weight of gaseous species, lb/lb-mol | 28.01 | $MW_S$, where |

$MW_S$ = 28.01 for CO; 46.01 for $NO_X$ as $NO_2$; 64.06 for $SO_X$ as $SO_2$

Conversion factor from ppm to lb/scf: 7.27E-08 $CF$ where

1.194E-07 [(lb/scf) / ppm] for $NO_X$

1.660E-07 [(lb/scf) / ppm] for $SO_2$

1.194E-07 x $MW_x/MW_{NOX}$ [(lb/scf) / ppm] for other compounds (x)

**1 GASEOUS EMISSIONS**

***Note: The results calculated on these pages may differ slightly from the results presented in the final report. This difference can be attributed to "significant digit round-off errors" common when comparing computer spreadsheets results with those derived from using a calculator.***

**a. Mass emission rate, lb/hr**

$$M = (C)(CF)(Q_{ds})(60\ min/hr)$$

$M$ = (1086)(7.27E-08)(2,976)(60)

$M$ = 14.095 lb/hr

**b. Emission rate, lb/MMBtu**

$$E = (C)(CF)(F_d)\left(\frac{20.9}{20.9 - \%O_2}\right)$$

$E$ = $\frac{(1086)(7.27E\text{-}08)(9{,}778)(20.9)}{(20.9 - 16.63)}$

$E$ = 3.778 lb/MMBtu

**EXAMPLE CALCULATIONS**
**GASEOUS EMISSIONS**

| | | | |
|---|---|---|---|
| **Project name:** | ODEQ / ACI | **Project number:** | 006AS-021372 |
| **Computed by:** | A Little | **Calculation date:** | 2023-07-27 |
| **Run number:** | 1-Liquid | **Gaseous Species:** | Trichloroethene |

**EMISSIONS DATA**

| | | |
|---|---|---|
| Reference temperature, °R | 528 | $T_{ref}$ = (°F plus 460) |
| Concentration of gaseous species, ppmvd (10.0 ppbvd/1000) | 0.000620 | C |
| Dry stack gas flow rate at standard conditions, dscf | 2,945 | $Q_{ds}$ |
| Stack $O_2$, % volume dry | 15.59 | $O_2$ |
| "F" factor of fuel based on $O_2$, dscf/MMBtu @ 0% $O_2$ | 9,960 | $F_d$ |
| Molecular weight of gaseous species, lb/lb-mol | 131.39 | $MW_S$, where |

$MW_S$ = 28.01 for CO; 46.01 for $NO_X$ as $NO_2$; 64.06 for $SO_X$ as $SO_2$

| | | |
|---|---|---|
| Conversion factor from ppm to lb/scf | 3.41E-07 | CF where |

1.194E-07 [(lb/scf) / ppm] for $NO_X$

1.660E-07 [(lb/scf) / ppm] for $SO_2$

1.194E-07 x $MW_x/MW_{NOX}$ [(lb/scf) / ppm] for other compounds (x)

**1 GASEOUS EMISSIONS**

**a. Mass emission rate, lb/hr**

$$M = (C)(CF)(Q_{ds})(60\ min/hr)$$

$M$ = (0.001)(3.41E-07)(2,945)(60)

$M$ = 3.74E-05 lb/hr

**b. Mass emission rate, lb/ton**

$$M' = (M)/(P)$$

$M'$ = (0.0000374) / 0.720

$M'$ = 5.19E-05 lb/ton

***Note: The results calculated on these pages may differ slightly from the results presented in the final report. This difference can be attributed to "significant digit round-off errors" common when comparing computer spreadsheets results with those derived from using a calculator.***

**c. Emission rate, lb/MMBtu**

$$E = (C)(CF)(F_d)\left(\frac{20.9}{20.9 - \%O_2}\right)$$

$$E = \frac{(0.001)(3.41E\text{-}07)(9{,}960)(20.9)}{(20.9 - 15.59)}$$

$$E = 8.30E\text{-}06 \text{ lb/MMBtu}$$

**EXAMPLE CALCULATIONS**
**MERCURY EMISSIONS**

| | | | |
|---|---|---|---|
| **Project name:** | ODEQ | **Project number:** | 006AS-021372 |
| **Computed by:** | A Little | **Calculation date:** | 2023-07-27 |
| **Run number:** | 1 | **Gaseous Species:** | Mercury (Hg) |

**EMISSIONS DATA**

| | | |
|---|---|---|
| Reference temperature, °R | 528 | $T_{ref}$ = (°F plus 460) |
| Mass of measured compound in sample, µg/sample | 1.144 | $m$ |
| Standard volume of gas sampled, dscf | 106.846 | $V_{mstd}$ |
| Dry stack gas flow rate at standard conditions, dscfm | 2,945 | $Q_{ds}$ |

0.720 tons/hr fuel

**1 GASEOUS EMISSIONS**

**a. Concentration, mg/dscm**

$$C = \frac{(m)}{(V_{mstd})} \times \frac{1\,mg}{1000\,\mu g} \times \frac{35.315\,ft^3}{1\,m^3}$$

$$C = \frac{(1.144)(35.315)}{(106.846)(1000)}$$

C = 3.78E-04 mg/dscm

**b. Mass emission rate, lb/hr**

$$M = C \times \frac{1\,m^3}{35.31\,ft^3} \times Q_{ds} \times \frac{60\,min}{1\,hr} \times \frac{1\,g}{10^3\,mg} \times \frac{1\,lb}{454\,g}$$

$$M = \frac{(0.0003781)(2,945)(60)}{(35.31)(1,000)(454)}$$

M = 4.17E-06 lb/hr

***Note: The results calculated on this page may differ slightly from the results presented in the final report. This difference can be attributed to "significant digit round-off errors" common when comparing computer spreadsheets results with those derived from using a calculator.***

lb/ton = lb/hr / tons/hr wood fuel

= $4.17 \times 10^{-6}$ lb/hr / 0.720 tons/hr

= $5.79 \times 10^{-6}$ lb/ton

lb/MMBtu = (lb/hr / (flow dscfm × 60 min/hr)) × Fd dscf/MMBtu × (20.9 / (20.9 − %O2))

= ($4.17 \times 10^{-6}$ lb/hr / (2,945 dscfm × 60 min/hr)) × 9960 dscf/MMBtu × (20.9 / (20.9 − 15.59))

= $9.25 \times 10^{-7}$ lb/MMBtu

MONTROSE AIR QUALITY SERVICES

**EXAMPLE CALCULATIONS**
**METALS EMISSIONS**

| | | | |
|---|---|---|---|
| **Project name:** | ODEQ | **Project number:** | 006AS-021372 |
| **Computed by:** | A Little | **Calculation date:** | 2023-07-27 |
| **Run number:** | 1 | **Gaseous Species:** | Metal (Zn) |

**EMISSIONS DATA**

| | | |
|---|---|---|
| Reference temperature, °R | 528 | $T_{ref}$ = (°F plus 460) |
| Mass of measured compound in sample, µg/sample | 1734.39 | $m$ |
| Standard volume of gas sampled, dscf | 106.846 | $V_{mstd}$ |
| Dry stack gas flow rate at standard conditions, dscfm | 2,945 | $Q_{ds}$ |

**1 GASEOUS EMISSIONS**

**a. Concentration, mg/dscm**

$$C = \frac{(m)}{(V_{mstd})} \times \frac{1\ mg}{1000\ \mu g} \times \frac{35.315\ ft^3}{1\ m^3}$$

$$C = \frac{(1734.39)(35.315)}{(106.846)(1000)}$$

C = 0.573 mg/dscm

**b. Mass emission rate, lb/hr**

$$M = C \times \frac{1\ m^3}{35.31\ ft^3} \times Q_{ds} \times \frac{60\ min}{1\ hr} \times \frac{1\ g}{10^3\ mg} \times \frac{1\ lb}{454\ g}$$

$$M = \frac{(0.573255)(2,945)(60)}{(35.31)(1,000)(454)}$$

M = 6.32E-03 lb/hr

***Note: The results calculated on this page may differ slightly from the results presented in the final report. This difference can be attributed to "significant digit round-off errors" common when comparing computer spreadsheets results with those derived from using a calculator.***

**EXAMPLE CALCULATIONS**
**POLYCHLORINATED DIBENZODIOXINS/FURANS EMISSIONS**

| | | | |
|---|---|---|---|
| **Project name:** | ODEQ | **Project number:** | 006AS-021372 |
| **Computed by:** | A Little | **Calculation date:** | 2023-08-30 |
| **Run number:** | 1 | **Gaseous Species:** | PCDD/PCDF-WTEQ calc |

**EMISSIONS DATA**

| | | |
|---|---|---|
| Reference temperature, °R | 528 | $T_{ref}$ = (°F plus 460) |
| Mass of measured PCDD/PCDF in sample, pg/sample | 408 | $m$ |
| Standard volume of gas sampled, dscf | 100.997 | $V_{mstd}$ |
| Dry stack gas flow rate at standard conditions, dscfm | 2,742 | $Q_{ds}$ |

**1 GASEOUS EMISSIONS**

**a. Concentration, ng/dscm**

$$C = \frac{\sum m}{(V_{mstd})} \times \frac{1\ ng}{1000\ pg} \times \frac{35.315\ ft^3}{1\ m^3}$$

$$C = \frac{(408)(35.315)}{(100.997)(1000)}$$

C = 0.143 ng/dscm

***Note: The results calculated on these pages may differ slightly from the results presented in the final report. This difference can be attributed to "significant digit round-off errors" common when comparing computer spreadsheets results with those derived from using a calculator.***

**b. Mass emission rate, lb/hr**

$$M = (C)(Q_{ds}) \times \left(\frac{1\ g}{10^9\ ng}\right)\left(\frac{1\ lb}{453.6\ g}\right)\left(\frac{1\ m^3}{35.315\ ft^3}\right)(60\ min/hr)$$

$$M = \frac{(0.14266)(2{,}742)(60)}{(10\text{^}9)(453.6)(35.315)}$$

$M =$ 1.47E-09 lb/hr

ODEQ ACI OUTLET RUN 1 W006AS-021372 ALITTLE 7/27/2023 (1/2)

Given:

| | | |
|---|---|---|
| Formaldehyde sample mass | = | 200 µg |
| Dry standard sample volume, $V_{m\text{-}std}$ | = | 2.490 dscf |
| Dry sample flow rate, Qsd | = | 2,945 dscf/min |

Constants:

Molecular weight of Formaldehyde, mw = 30.03 gm/gmol or lb/lbmol

Conversions:

24.055 L/gmol @ 68ºF and 29.92 inHg

385.3 $ft^3$ / lbmol @ 68ºF and 29.92 inHg

35.315 $ft^3$ / $m^3$

0.720 tons/hr wood fuel

Concentration:

$$gm / m^3 = \frac{35.315 \times \mu g}{V_{m\text{-}std} \times 10^6}$$

$$gm / m^3 = \frac{35.315\ (ft^3/m^3) \times 200\ (\mu g)}{2.490\ (ft^3) \times 10^6\ (\mu g/gm)}$$

$$gm / m^3 = 0.002836\ gm / m^3$$

$$ppmv = \frac{24.055 \times gm/m^3 \times 10^6}{mw \times 1000}$$

$$ppmv = \frac{24.055\ (L/gmol) \times 0.002836\ (gm/m^3) \times 10^6\ (ppmv)}{30.03\ (gm/gmol) \times 1000\ (L/m^3)}$$

ppmv = 2.27 ppmv-Formaldehyde

Emissions:

$$lb / hr = \frac{ppmv \times 60 \times mw \times Q_{sd}}{385.3 \times 10^6}$$

$$lb / hr = \frac{2.27\ (ppmv) \times 60\ (min/hr) \times 30.03\ (lb/lbmol) \times 2{,}945\ (ft^3/min)}{385.3\ (ft^3/lbmol) \times 10^6\ (ppmv)}$$

lb / hr = 0.0313 lb-Formaldehyde /hr

Lb/ton = $\frac{0.0313 \text{ (lb-Formaldehyde/hr)}}{0.720 \text{(ton/hr wood fuel)}}$

Lb/ton = 0.0435 lb/ton

Lb/MMBtu = ppmv x 7.79 x 10-8 ((lb/scf)/ppm)) x Fd (dscf/MMBtu) x (20.9 / (20.9-%O2)

Lb/MMBtu = 2.27 ppmv x 7.79 x 10-8 ((lb/scf)/ppm)) x 9960 dscf/MMBtu x (20.9/(20.9-15.59))

Lb/MMBtu = 0.00693 lb/MMBtu

# Appendix A.17
# General Equations

# EMISSION CALCULATIONS

1. Volumetric Flow and Isokinetics

   a. Standard sample gas volume, dscf

   $$V_{m\,std} = 17.636 \times (V_m)(Y)\frac{\left(P_{bar} + \frac{\Delta H}{13.6}\right)}{(T_m + 460)}$$

   b. Water vapor volume, scf

   $$V_{w\,std} = (0.04716)(V_{lc})\left(\frac{T_{std} + 460}{528}\right)$$

   c. Moisture content, non-dimensional

   $$B_{ws} = \frac{V_{w\,std}}{(V_{m\,std} + V_{w\,std})}$$

   d. Stack gas molecular weight, lb/lb mole (dry)

   $$MW_{dry} = [0.44(\%CO_2)] + [0.32(\%O_2)] + [0.28(\%N_2)]$$

   e. Stack gas molecular weight, lb/lb mole (wet)

   $$MW_{wet} = \left[MW_{dry}(1 - B_{ws})\right] + [18(B_{ws})]$$

   f. Absolute stack pressure, in Hg

   $$P_s = P_{bar} + \left(\frac{P_{sg}}{13.6}\right)$$

   g. Stack velocity, ft/sec

   $$v_s = (85.49)\left(C_p\right)\left(\sqrt{\Delta P}\right)\sqrt{\frac{T_s}{(P_s)(MW_{wet})}}$$

   h. Actual stack flow rate, acfm

   $$Q = (v_s)(A_s)(60\ min/hr)$$

   i. Standard stack gas flow rate, wscfm

   $$Q_{ws} = (v_s)(A_s)(60\ min/hr)\left(\frac{T_{std} + 460}{T_s + 460}\right)\left(\frac{P_s}{P_{std}}\right)$$

   j. Standard stack gas flow rate, dscfm

   $$Q_{ds} = (v_s)(A_s)(60\ min/hr)(1 - B_{ws})\left(\frac{T_{std} + 460}{T_s + 460}\right)\left(\frac{P_s}{P_{std}}\right)$$

   k. Percent isokinetic

   $$I = \frac{(T_s)(V_{m\,std})(P_{std})(100)}{(T_{std} + 460)(v_s)(\theta)(A_n)(P_s)(60)(1 - B_{ws})}$$

2. Gaseous Emissions

a. Concentration, ppm volume wet (i.e. to calculate wet ppm from dry ppm)

$$C_w = (C)(1 - B_{ws})$$

b. Concentration, ppm @ 3% $O_2$ dry

$$C_3 = (C)\left[\frac{(20.9 - 3.0)}{(20.9 - \%\ O_2)}\right]$$

c. Concentration, ppm @ 12% $CO_2$ dry

$$C_{12} = (C)\left(\frac{12.0}{\%\ CO_2}\right)$$

d. Concentration, ppm volume dry (i.e. to calculate dry ppm from wet ppm)

$$C = \left[\frac{C_w}{(1 - B_{ws})}\right]$$

e. Mass emission rate, lb/hr

$$M = (C)(CF)(Q_{ds})(60\ min/hr)$$

where,

*CF* = conversion factor from ppm to lb/scf:

$$CF_{NOx} = 1.194 \times 10^{-7}\left(\frac{lb/scf}{ppm}\right)$$

$$CF_{SO2} = 1.660 \times 10^{-7}\left(\frac{lb/scf}{ppm}\right)$$

$CF_X = CF_{NOX}\left(\frac{MW_X}{MW_{NOX}}\right)$ for other compounds (x)

f. Emission rate, lb/MMBtu

$$E = (C)(CF)(F_d)\left(\frac{20.9}{20.9 - \%\ O_2}\right)$$

g. Mass emission rate, grams/bhp-hr

$$M_j = (M)\left(\frac{453.59\ g/lb}{J}\right)$$

3. Particulate Emissions

   a. Grain loading, gr/dscf

   $$G = (0.0154)\left(\frac{G_m}{V_{m\,std}}\right)$$

   b. Grain loading corrected to 12% $CO_2$, gr/dscf @ 12% $CO_2$

   $$G_{12} = (G)\left(\frac{12.0}{\%\ CO_2}\right)$$

   c. Mass emission rate, lb/hr

   $$M = (G)(Q_{ds})\left(\frac{60\ min/hr}{7{,}000\ gr/lb}\right)$$

   d. Emission rate, lb/MMBtu

   $$E = (G)\left(\frac{1\ lb}{7{,}000\ gr}\right)(F_d)\left(\frac{20.9}{20.9 - \%\ O_2}\right)$$

4. Fuel Factor "F"

   a. Choice #1 – use the values for $F_d$ provided in Method 19, Table 19-1
   Choice #2 – if you have fuel ultimate and proximate analysis, calculate $F_d$ (need fuel weight %CHONS, HHV)
   Stoichiometric fuel factor at 68 °F, dscf/MMBtu at 0% $O_2$:

   $$F_d = \frac{(10^6)[3.64(\%\ H) + 1.53(\%\ C) + 0.14(\%\ N) + 0.57(\%\ S) - 0.46(\%\ O)]}{HHV, Btu/lb}$$

   b. Fuel factor at 60 °F (use if all your volumes and flows are at 60 °F)

   $$F_{d\,60} = F_d\left(\frac{520°R}{528°R}\right)$$

5. Miscellaneous Equations

a. Standard stack gas flow rate, calculated from fuel flow and F factor, dscfm

Note: $Q_f$ and HHV need to be in units of either lb/hr and Btu/lb, or scf/hr and Btu/scf. *Do not mix units!*

(calculation based on stack $\%O_2$)

$$Q_{ds} = (Q_f)(HHV)(10^{-6})(F_d)\left(\frac{20.9}{20.9 - \%\ O_2}\right)/(60\ min/hr)$$

or (calculation based on stack $\%CO_2$ – see EPA Method 19 for values of $F_c$)

$$Q_{ds} = (Q_f)(HHV)(10^{-6})(F_c)\left(\frac{100}{\%\ CO_2}\right)/(60\ min/hr)$$

b. Destruction efficiency of emission control device, %

$EFF = \left(\frac{C_{in} - C_{out}}{C_{in}}\right)(100\%)$ based on concentrations

or

$EFF = \left(\frac{M_{in} - M_{out}}{M_{in}}\right)(100\%)$ based on mass emission rates

c. Cylinder gas audit, % accuracy

$$A_c = \left(\frac{C_m - C_a}{C_a}\right)(100\%)$$

Nomenclature:

| | | |
|---|---|---|
| $A_c$ | = | accuracy of CEMS during cylinder gas audit (CGA), % difference |
| $A_n$ | = | nozzle area, $in^2$ ($\pi r^2$), where $\pi$ = 3.1416 and r = radius (½ diameter) in inches |
| $A_s$ | = | stack area, $ft^2$ ($\pi r^2$), where $\pi$ = 3.1416 and r = radius (½ diameter) in feet |
| $B_{ws}$ | = | flue gas moisture content (multiply by 100 for % by volume) |
| $C$ | = | concentration of gaseous species, ppm volume dry |
| $C_a$ | = | concentration of audit gas, ppm (for CGA, equation 5c) |
| $C_m$ | = | concentration measured by CEMS, ppm (for CGA, equation 5c) |
| $C_p$ | = | calibration factor for pitot tube, dimensionless |
| $C_w$ | = | concentration of gaseous species, ppm volume wet |
| $C_3$ | = | corrected concentration of gaseous species, ppm @ 3% $O_2$ dry |
| $C_{12}$ | = | corrected concentration of gaseous species, ppm @ 12% $CO_2$ dry |
| $E$ | = | mass emission rate, lb/MMBtu |
| $EFF$ | = | destruction or removal efficiency of emission control device, % efficiency |
| $F_c$ | = | stoichiometric “F” factor of fuel based on $CO_2$, dscf/MMBtu @ 100% $CO_2$ |
| $F_d$ | = | stoichiometric “F” factor of fuel based on $O_2$, dscf/MMBtu @ 0% $O_2$ |
| $G$ | = | particulate matter grain loading, grains/dscf |
| $G_{12}$ | = | corrected particulate matter grain loading, grains/dscf @ 12% $CO_2$ |
| $G_m$ | = | mass of collected particulate matter, mg |
| $HHV$ | = | higher heating value, Btu/cubic foot |
| $I$ | = | % isokinetic sampling rate, % |
| $J$ | = | brake horsepower, bhp |
| $M_j$ | = | mass emission rate of measured species (s), g/hp-hr |
| $M$ | = | mass emission rate, lb/hr |
| $MW_{dry}$ | = | molecular weight of stack gas, dry basis |
| $MW_{wet}$ | = | molecular weight of stack gas, wet basis |
| $MW_s$ | = | molecular weight of gaseous species (s), lb/lb mole: |

| | | | | | |
|---|---|---|---|---|---|
| CO: | 28.01 | (can use 28) | $NO_x$ as $NO_2$: | 46.01 | (can use 46) |
| $SO_x$ as $SO_2$: | 64.06 | (can use 64) | Hydrocarbons as C: | 12.01 | (can use 12) |
| Hydrocarbons as $CH_4$: | 16.04 | (can use 16) | Hydrocarbons as $C_3H_8$: | 44.10 | (can use 44) |
| $NH_3$: | 17.03 | (can use 17) | | | |

| | | |
|---|---|---|
| $N_2$ | = | nitrogen content of stack gas, % volume dry |
| $P_{bar}$ | = | barometric pressure, in. Hg |
| $P_s$ | = | stack absolute pressure, in. Hg |
| $P_{sg}$ | = | stack static pressure, inches of water, gauge (iwg) |
| $Q$ | = | wet stack gas flow rate at actual conditions, acfm |
| $Q_f$ | = | fuel flow rate, scfh or lb/hr (be careful of units) |
| $Q_{ds}$ | = | dry stack gas flow rate at standard conditions, dscfm |
| $Q_{ws}$ | = | wet stack gas flow rate at standard conditions, wscfm |
| $SV$ | = | specific molar volume of an ideal gas at standard conditions, $ft^3$/lb mole |
| $T_m$ | = | meter temperature, °R |
| $T_{std}$ | = | reference temperature, °R |
| $T_s$ | = | stack gas temperature, °R |
| $v_s$ | = | stack gas velocity, ft/sec |
| $V_{lc}$ | = | volume of liquid collected in impingers, ml |
| $V_m$ | = | dry meter volume uncorrected, acf |
| $V_{m\ std}$ | = | dry meter volume corrected to standard conditions, dscf |
| $V_{w\ std}$ | = | volume of water vapor at standard conditions, scf |
| $Y$ | = | meter calibration coefficient, dimensionless |
| $\Delta H$ | = | average pressure differential across meter, inches water |
| $\Delta P$ | = | average velocity head of stack gas, inches water |
| $\Theta$ | = | sampling time, minutes |

# Appendix B
# Facility Process Data

Oregon DEQ - Air Curtain Incinerator Test
Fuel Weight Data

Note: Tare on all boxes was **14,700** lbs

| 5/23/2023 | Run 1 | | Run 2 | |
|---|---|---|---|---|
| | Box 1 | Box 2 | Box 1 | Box 2 |
| Loaded Weight | 18,180 | 19,740 | 18,200 | 18,140 |
| Tare Weight | 14,700 | 18,140 | 14,700 | 18,100 |
| **Total Weight** | **3,480** | **1,600** | **3,500** | **40** |
| | | | | |
| Test Time Start | 9:50 | | 14:10 | |
| Test Time End | 12:50 | | 17:10 | |
| **Total Time, hrs** | **3** | | **3** | |
| | | | | |
| **Lbs/hr** | **1693.3** | | **1,180.0** | |
| **Tons/hr** | **0.85** | | **0.59** | |

| 5/24/2023 | Run 1 | | Run 2 | |
|---|---|---|---|---|
| | Box 1 | Box 3 | Box 1 | Box 2 |
| Loaded Weight | 17,820 | 18,880 | 16,540 | 17,620 |
| Tare Weight | 16,540 | 14,700 | 14,700 | 15,140 |
| **Total Weight** | **1,280** | **4,180** | **1,840** | **2,480** |
| | | | | |
| Test Time Start | 9:25 | | 14:18 | |
| Test Time End | 12:25 | | 17:18 | |
| **Total Time, hrs** | **3** | | **3** | |
| | | | | |
| **Lbs/hr** | **1820** | | **1,440** | |
| **Tons/hr** | **0.91** | | **0.72** | |

| 5/25/2023 | Run 1 | | | Run 2 | |
|---|---|---|---|---|---|
| | Box 3 | Box 2 | Box 1 | Box 1 | Box 2 |
| Loaded Weight | 15,140 | 17,520 | 18,020 | 15,700 | 17,800 |
| Tare Weight | 14,700 | 14,700 | 15,700 | 14,700 | 14,700 |
| **Total Weight** | **440** | **2,820** | **2,320** | **1,000** | **3,100** |
| | | | | | |
| Test Time Start | 8:52 | | | 13:05 | |
| Test Time End | 11:52 | | | 16:05 | |
| **Total Time, hrs** | **3** | | | **3** | |
| | | | | | |
| **Lbs/hr** | **1860** | | | **1,367** | |
| **Tons/hr** | **0.93** | | | **0.68** | |

First Run 5-23-23

Box 1 empty 14,700

Loaded 18,180

Box 2 14,700

Loaded 19,740 reweighed 18140

Second Run

Box 1 empty 14700

Loaded 18,200

Box 2 18,140 reweighed 18,100

5-24-23

Run 1 — 1+3 Box Empty 14,700

Box 3 18,880

Box 1 17,820 - 16,540

~~Box 3 17,620 - 15140~~

~~Box 1 16,540~~

Run 2.

Box 1 16,540

Box 3 17,620 - 15,140 finished reweighed

5-25-23 Tare on all boxes 14,700

Run 1

Box 3 start 15,140 7:30 am

Box 2 17,520 8 am

Box 1 18,020 9:45 am

Finish & reweigh Box 1 15,700

Run 2

Box 1 15,700 (Full box)

Box 2 17,800 (full box)

# Appendix C
# Laboratory Analysis Data

# Appendix C.1
# PM & Metals Analyses

MONTROSE AIR QUALITY SERVICES

PROJECT: PROJ-021372

CLIENT # M041
REPORT # 23-298

SUBMITTED BY:
***CHESTER LabNet***
12242 S.W. GARDEN PLACE
TIGARD, OR 97223
(503)624-2183/FAX (503)624-2653
www.ChesterLab.Net

# CHESTER LabNet

12242 SW Garden Place ❖ Tigard, OR 97223-8246 ❖ USA
Telephone 503-624-2183 ❖ Fax 503-624-2653 ❖ www.chesterlab.net


## Case Narrative

Date: July 26, 2023

### General Information

| | |
|---|---|
| Client: | Montrose Air Quality Services |
| Client Number: | M041 |
| Report Number: | 23-298 |
| Sample Description: | Impinger Trains |
| Sample Numbers: | 22-U239, 22-U423, 22-U426, 22-U427, 23-S1272 – 23-S1302 |

### Analysis

| | |
|---|---|
| Analytes: | Particulate Mass, Sb, As, Ba, Be, Cd, Cr, Co, Cu, Pb, Mn, Hg, Ni, P, Se, Ag, Tl, Zn |
| Analytical Protocols: | Oregon DEQ Method 5 (November 2018 version)<br>EPA Method 29 (8/2/17 version) |
| Analytical Notes: | No problems were encountered during the analyses.<br><br>The lab blank is a beaker that is weighed along with the sample beakers. Nothing is added to it during the process. The method blank has acetone added to it and is treated like a regular sample. The amount of acetone evaporated is approximately what is used to rinse the sample bottles when the samples are being transferred to beakers.<br><br>Results have not been blank corrected. |
| QA/QC Review: | All of the data have been reviewed by the analysts performing the analyses and the project manager. All of the quality control and sample-specific information in this package is complete and meets or exceeds the minimum requirements for acceptability. |
| Comments: | If you have any questions or concerns regarding this analysis, please feel free to contact the project manager. |
| Disclaimer: | This report shall not be reproduced, except in full, without the written approval of the laboratory. The results only represent that of the samples as received into the laboratory. All method 29 data are reported to the detection limit. Results <5x DL must be considered to have a higher degree of uncertainty associated with them. Due to the statistical process of detection limit determination, data in this report should not be used for statistical analysis as the data has been censored in such a manner as to bias statistical analyses high. |

Paul Duda 7/26/23

Project Manager Date
Paul Duda

**Montrose Air Quality Services**
**Project: PROJ-021372 - ACI**
**ODEQ Method 5 Data - Report # 23-298**

| Sample ID | Client ID | Sample Date | Sample Volume (mL) | Net Weight (mg) Acetone | Filter | Aqueous Phase | Organic Phase | Comments |
|---|---|---|---|---|---|---|---|---|
| Lab_Blk | | | | **-0.36** | | | | |
| Meth_Blk | | | | **-0.49** | | | | |
| Lab_Blk | | | | | | **-0.33** | **-0.06** | |
| Meth_Blk | | | | | | **-0.44** | **-28.00** | |
| 22-U427 | 1-PM Filter | 5/23/23 | | | **506.58** | | | Filter |
| 23-S1272 | 1-PM FH Acetone | 5/23/23 | 114 | **200.98** | | | | FH Rinse |
| 23-S1273 | 1-PM H2O | 5/23/23 | 555 | | | **220.33** | **25.06** | DI H2O |
| 23-S1274 | 1-PM BH Acetone | 5/23/23 | 146 | **20.01** | | | | Impinger Acetone Rinse |
| 22-U423 | 2-PM Filter | 5/23/23 | | | **761.82** | | | Filter |
| 23-S1275 | 2-PM FH Acetone | 5/23/23 | 108 | **212.14** | | | | FH Rinse |
| 23-S1276 | 2-PM H2O | 5/23/23 | 520 | | | **149.11** | **24.67** | DI H2O |
| 23-S1277 | 2-PM BH Acetone | 5/23/23 | 142 | **17.18** | | | | Impinger Acetone Rinse |
| 22-U426 | 3-PM Filter | 5/24/23 | | | **694.61** | | | Filter |
| 23-S1278 | 3-PM FH Acetone | 5/24/23 | 126 | **273.24** | | | | FH Rinse |
| 23-S1279 | 3-PM H2O | 5/24/23 | 560 | | | **175.77** | **17.35** | DI H2O |
| 23-S1280 | 3-PM BH Acetone | 5/24/23 | 148 | **17.22** | | | | Impinger Acetone Rinse |
| 22-U239 | FB-PM Filter Blank | 5/23/23 | | | **0.16** | | | |
| 23-S1281 | RB-PM-A Acetone Blank | 5/23/23 | 238 | **-0.18** | | | | |
| 23-S1282 | RB-PM-B H2O Blank | 5/23/23 | 248 | | | **-0.53** | | |

Client: H007 - Montrose Air Quality Services
Report Number: 23-298

Lab ID: 23-S1283
Client ID: 1-MM Cont. 1&3
Site: ACI
Sample Date: 5/24/23

| Analyte | Result | DL | Units |
|---|---|---|---|
| Antimony, ICP | < DL | 1.25 | µg/sample |
| Arsenic, ICP | 11.7 | 1.75 | µg/sample |
| Barium, ICP | 332. | 0.125 | µg/sample |
| Beryllium, ICP | 0.532 | 0.050 | µg/sample |
| Cadmium, ICP-MS | 3.04 | 0.050 | µg/sample |
| Chromium, ICP | 13.8 | 0.200 | µg/sample |
| Cobalt, ICP-MS | 5.32 | 0.125 | µg/sample |
| Copper, ICP | 410. | 1.25 | µg/sample |
| Lead, ICP-MS | 30.8 | 0.050 | µg/sample |
| Manganese, ICP | 382. | 0.075 | µg/sample |
| Mercury, CVAA | 0.0312 | 0.0219 | µg/sample |
| Nickel, ICP | 10.1 | 0.750 | µg/sample |
| Phosphorus, ICP | 7,550 | 5.00 | µg/sample |
| Selenium, ICP | < DL | 3.75 | µg/sample |
| Silver, ICP | 2.64 | 0.500 | µg/sample |
| Thallium, ICP-MS | 0.518 | 0.100 | µg/sample |
| Zinc, ICP | 1,730 | 0.750 | µg/sample |

---

Lab ID: 23-S1284
Client ID: 1-MM Cont. 4
Site: ACI
Sample Date: 5/24/23

| Analyte | Result | DL | Units |
|---|---|---|---|
| Antimony, ICP | < DL | 0.640 | µg/sample |
| Arsenic, ICP | < DL | 0.896 | µg/sample |
| Barium, ICP | 1.28 | 0.064 | µg/sample |
| Beryllium, ICP | < DL | 0.026 | µg/sample |
| Cadmium, ICP | < DL | 0.051 | µg/sample |
| Chromium, ICP | 0.265 | 0.102 | µg/sample |
| Cobalt, ICP | 0.301 | 0.064 | µg/sample |
| Copper, ICP | < DL | 0.640 | µg/sample |
| Lead, ICP | < DL | 0.640 | µg/sample |
| Manganese, ICP | 0.282 | 0.038 | µg/sample |
| Mercury, CVAA | 0.544 | 0.0396 | µg/sample |
| Nickel, ICP | < DL | 0.384 | µg/sample |
| Phosphorus, ICP | 6.78 | 2.56 | µg/sample |
| Selenium, ICP | < DL | 1.92 | µg/sample |
| Silver, ICP | 0.369 | 0.256 | µg/sample |
| Thallium, ICP | < DL | 1.28 | µg/sample |
| Zinc, ICP | 5.14 | 0.384 | µg/sample |

---

Lab ID: 23-S1285
Client ID: 1-MM Cont. 5a
Site: ACI
Sample Date: 5/24/23

| Analyte | Result | DL | Units |
|---|---|---|---|
| Mercury, CVAA | < DL | 0.00919 | µg/sample |

---

Client: H007 - Montrose Air Quality Services
Report Number: 23-298

Lab ID: 23-S1286
Client ID: 1-MM Cont. 5b
Site: ACI
Sample Date: 5/24/23

| Analyte | Result | DL | Units |
|---|---|---|---|
| Mercury, CVAA | 0.790 | 0.0346 | µg/sample |

Lab ID: 23-S1287
Client ID: 1-MM Cont. 5c
Site: ACI
Sample Date: 5/24/23

| Analyte | Result | DL | Units |
|---|---|---|---|
| Mercury, CVAA | < DL | 0.0196 | µg/sample |

Lab ID: 23-S1288
Client ID: 2-MM Cont. 1&3
Site: ACI
Sample Date: 5/25/23

| Analyte | Result | DL | Units |
|---|---|---|---|
| Antimony, ICP | < DL | 1.25 | µg/sample |
| Arsenic, ICP | 9.03 | 1.75 | µg/sample |
| Barium, ICP | 261. | 0.125 | µg/sample |
| Beryllium, ICP | 0.222 | 0.050 | µg/sample |
| Cadmium, ICP-MS | 1.98 | 0.050 | µg/sample |
| Chromium, ICP | 7.18 | 0.200 | µg/sample |
| Cobalt, ICP-MS | 2.20 | 0.125 | µg/sample |
| Copper, ICP | 242. | 1.25 | µg/sample |
| Lead, ICP-MS | 16.0 | 0.050 | µg/sample |
| Manganese, ICP | 177. | 0.075 | µg/sample |
| Mercury, CVAA | < DL | 0.0219 | µg/sample |
| Nickel, ICP | 5.85 | 0.750 | µg/sample |
| Phosphorus, ICP | 4,490 | 5.00 | µg/sample |
| Selenium, ICP | < DL | 3.75 | µg/sample |
| Silver, ICP | 2.10 | 0.500 | µg/sample |
| Thallium, ICP-MS | 0.344 | 0.100 | µg/sample |
| Zinc, ICP | 1,510 | 0.750 | µg/sample |

Client: H007 - Montrose Air Quality Services
Report Number: 23-298

Lab ID: 23-S1289
Client ID: 2-MM Cont. 4
Site: ACI
Sample Date: 5/25/23

| Analyte | Result | DL | Units |
|---|---|---|---|
| Antimony, ICP | < DL | 0.620 | µg/sample |
| Arsenic, ICP | < DL | 0.868 | µg/sample |
| Barium, ICP | 0.471 | 0.062 | µg/sample |
| Beryllium, ICP | < DL | 0.025 | µg/sample |
| Cadmium, ICP | 0.753 | 0.050 | µg/sample |
| Chromium, ICP | 0.314 | 0.099 | µg/sample |
| Cobalt, ICP | 0.101 | 0.062 | µg/sample |
| Copper, ICP | 0.997 | 0.620 | µg/sample |
| Lead, ICP | < DL | 0.620 | µg/sample |
| Manganese, ICP | 0.549 | 0.037 | µg/sample |
| Mercury, CVAA | 0.561 | 0.0446 | µg/sample |
| Nickel, ICP | < DL | 0.372 | µg/sample |
| Phosphorus, ICP | 2.82 | 2.48 | µg/sample |
| Selenium, ICP | < DL | 1.86 | µg/sample |
| Silver, ICP | < DL | 0.248 | µg/sample |
| Thallium, ICP | < DL | 1.24 | µg/sample |
| Zinc, ICP | 19.1 | 0.372 | µg/sample |

---

Lab ID: 23-S1290
Client ID: 2-MM Cont. 5a
Site: ACI
Sample Date: 5/25/23

| Analyte | Result | DL | Units |
|---|---|---|---|
| Mercury, CVAA | < DL | 0.00831 | µg/sample |

---

Lab ID: 23-S1291
Client ID: 2-MM Cont. 5b
Site: ACI
Sample Date: 5/25/23

| Analyte | Result | DL | Units |
|---|---|---|---|
| Mercury, CVAA | 0.653 | 0.0341 | µg/sample |

---

Lab ID: 23-S1292
Client ID: 2-MM Cont. 5c
Site: ACI
Sample Date: 5/25/23

| Analyte | Result | DL | Units |
|---|---|---|---|
| Mercury, CVAA | < DL | 0.0110 | µg/sample |

---

Client: H007 - Montrose Air Quality Services
Report Number: 23-298

Lab ID: 23-S1293
Client ID: 3-MM Cont. 1&3
Site: ACI
Sample Date: 5/25/23

| Analyte | Result | DL | Units |
|---|---|---|---|
| Antimony, ICP | < DL | 1.25 | µg/sample |
| Arsenic, ICP | 10.7 | 1.75 | µg/sample |
| Barium, ICP | 300. | 0.125 | µg/sample |
| Beryllium, ICP | 1.03 | 0.050 | µg/sample |
| Cadmium, ICP-MS | 3.78 | 0.050 | µg/sample |
| Chromium, ICP | 24.0 | 0.200 | µg/sample |
| Cobalt, ICP-MS | 9.67 | 0.125 | µg/sample |
| Copper, ICP | 690. | 1.25 | µg/sample |
| Lead, ICP-MS | 39.3 | 0.050 | µg/sample |
| Manganese, ICP | 636. | 0.075 | µg/sample |
| Mercury, CVAA | < DL | 0.0219 | µg/sample |
| Nickel, ICP | 15.6 | 0.750 | µg/sample |
| Phosphorus, ICP | 12,700 | 5.00 | µg/sample |
| Selenium, ICP | < DL | 3.75 | µg/sample |
| Silver, ICP | 3.19 | 0.500 | µg/sample |
| Thallium, ICP-MS | 0.749 | 0.100 | µg/sample |
| Zinc, ICP | 3,260 | 0.750 | µg/sample |

Lab ID: 23-S1294
Client ID: 3-MM Cont. 4
Site: ACI
Sample Date: 5/25/23

| Analyte | Result | DL | Units |
|---|---|---|---|
| Antimony, ICP | < DL | 0.625 | µg/sample |
| Arsenic, ICP | < DL | 0.875 | µg/sample |
| Barium, ICP | 0.664 | 0.062 | µg/sample |
| Beryllium, ICP | < DL | 0.025 | µg/sample |
| Cadmium, ICP | < DL | 0.050 | µg/sample |
| Chromium, ICP | 0.146 | 0.100 | µg/sample |
| Cobalt, ICP | 0.140 | 0.062 | µg/sample |
| Copper, ICP | 0.892 | 0.625 | µg/sample |
| Lead, ICP | < DL | 0.625 | µg/sample |
| Manganese, ICP | 0.957 | 0.038 | µg/sample |
| Mercury, CVAA | 0.423 | 0.0442 | µg/sample |
| Nickel, ICP | < DL | 0.375 | µg/sample |
| Phosphorus, ICP | 9.02 | 2.50 | µg/sample |
| Selenium, ICP | < DL | 1.88 | µg/sample |
| Silver, ICP | < DL | 0.250 | µg/sample |
| Thallium, ICP | < DL | 1.25 | µg/sample |
| Zinc, ICP | 3.21 | 0.375 | µg/sample |

Lab ID: 23-S1295
Client ID: 3-MM Cont. 5a
Site: ACI
Sample Date: 5/25/23

| Analyte | Result | DL | Units |
|---|---|---|---|
| Mercury, CVAA | < DL | 0.00875 | µg/sample |

Client: H007 - Montrose Air Quality Services
Report Number: 23-298

Lab ID: 23-S1296
Client ID: 3-MM Cont. 5b
Site: ACI
Sample Date: 5/25/23

| Analyte | Result | DL | Units |
|---|---|---|---|
| Mercury, CVAA | 1.68 | 0.0347 | µg/sample |

Lab ID: 23-S1297
Client ID: 3-MM Cont. 5c
Site: ACI
Sample Date: 5/25/23

| Analyte | Result | DL | Units |
|---|---|---|---|
| Mercury, CVAA | < DL | 0.0114 | µg/sample |

Lab ID: 23-S1298
Client ID: RB-MM-8a&12
Site: ACI
Sample Date: 5/25/23
Comments: Front Half Blank

| Analyte | Result | DL | Units |
|---|---|---|---|
| Antimony, ICP | < DL | 1.25 | µg/sample |
| Arsenic, ICP | < DL | 1.75 | µg/sample |
| Barium, ICP | 1.15 | 0.125 | µg/sample |
| Beryllium, ICP | < DL | 0.050 | µg/sample |
| Cadmium, ICP-MS | < DL | 0.050 | µg/sample |
| Chromium, ICP | 1.70 | 0.200 | µg/sample |
| Cobalt, ICP-MS | < DL | 0.125 | µg/sample |
| Copper, ICP | 2.37 | 1.25 | µg/sample |
| Lead, ICP-MS | 0.149 | 0.050 | µg/sample |
| Manganese, ICP | 0.868 | 0.075 | µg/sample |
| Mercury, CVAA | < DL | 0.0219 | µg/sample |
| Nickel, ICP | 7.90 | 0.750 | µg/sample |
| Phosphorus, ICP | 5.74 | 5.00 | µg/sample |
| Selenium, ICP | < DL | 3.75 | µg/sample |
| Silver, ICP | < DL | 0.500 | µg/sample |
| Thallium, ICP-MS | < DL | 0.100 | µg/sample |
| Zinc, ICP | 2.40 | 0.750 | µg/sample |

Client: H007 - Montrose Air Quality Services
Report Number: 23-298

Lab ID: 23-S1299
Client ID: RB-MM-9
Site: ACI
Sample Date: 5/25/23
Comments: Back Half Blank

| Analyte | Result | DL | Units |
|---|---|---|---|
| Antimony, ICP | < DL | 0.625 | µg/sample |
| Arsenic, ICP | < DL | 0.875 | µg/sample |
| Barium, ICP | 0.191 | 0.062 | µg/sample |
| Beryllium, ICP | < DL | 0.025 | µg/sample |
| Cadmium, ICP | < DL | 0.050 | µg/sample |
| Chromium, ICP | < DL | 0.100 | µg/sample |
| Cobalt, ICP | < DL | 0.062 | µg/sample |
| Copper, ICP | < DL | 0.625 | µg/sample |
| Lead, ICP | < DL | 0.625 | µg/sample |
| Manganese, ICP | 0.114 | 0.038 | µg/sample |
| Mercury, CVAA | 0.250 | 0.0177 | µg/sample |
| Nickel, ICP | < DL | 0.375 | µg/sample |
| Phosphorus, ICP | < DL | 2.50 | µg/sample |
| Selenium, ICP | < DL | 1.88 | µg/sample |
| Silver, ICP | < DL | 0.250 | µg/sample |
| Thallium, ICP | < DL | 1.25 | µg/sample |
| Zinc, ICP | < DL | 0.375 | µg/sample |

---

Lab ID: 23-S1300
Client ID: RB-MM-8b
Site: ACI
Sample Date: 5/25/23
Comments: Water Blank

| Analyte | Result | DL | Units |
|---|---|---|---|
| Mercury, CVAA | < DL | 0.00884 | µg/sample |

---

Lab ID: 23-S1301
Client ID: RB-MM-10
Site: ACI
Sample Date: 5/25/23
Comments: KMnO4 Blank

| Analyte | Result | DL | Units |
|---|---|---|---|
| Mercury, CVAA | < DL | 0.00836 | µg/sample |

---

Lab ID: 23-S1302
Client ID: RB-MM-11
Site: ACI
Sample Date: 5/25/23
Comments: HCl Blank

| Analyte | Result | DL | Units |
|---|---|---|---|
| Mercury, CVAA | < DL | 0.0114 | µg/sample |

---

| All masses in grams (g) | | | M5 filter: | Montrose 23-298 | | | | |
|---|---|---|---|---|---|---|---|---|
| Sx ID | Tare | Tare QC | Tare - QC | Gross | Gross QC | Gross - QC | Net Mass* | Net Mass |
| date/init: | 2/11/22 TP | 2/14/22 TP | | 6/9/23 ATM | 6/13/23 ATM | | | (mg) |
| time: | 10:46 | 13:53 | | 11:50 | 13:46 | | | |
| Ambient | | | | | | | | |
| Rel. Humidity | 39.9% | 40.0% | | 42.8% | 37.4% | | | |
| Temp (C/F) | 21.4C / 70.5F | 21.9C / 71.4F | | 23.0C / 73.4F | 22.9C / 73.2F | | | |
| Desiccator | | | | | | | | |
| Rel. Humidity | 0.2% | 1.7% | | 3.7% | 2.5% | | | |
| Temp (C/F) | 21.0C / 69.8F | 21.4C / 70.5F | | 22.3C / 72.1F | 22.2C / 72.0F | | | |
| 0.30000g QC | 0.30001 | 0.30000 | | 0.30000 | 0.30000 | | | |
| 0.50000g QC | 0.50000 | 0.49999 | | 0.49998 | 0.49999 | | | |
| 3.00000g QC | 3.00002 | 3.00003 | | 3.00002 | 3.00003 | | | |
| 22-U239 | 0.45045 | 0.45039 | 0.00006 | 0.45061 | 0.45066 | -0.00005 | 0.00016 | 0.16 |
| *net mass = gross - tare (g) | | | | | | | | |
| Quartz tissue filters | | | | | | | | |
| Data collected electronically by proprietary BERT II software. | | | | | | | | |

| All masses in grams (g) | | | M5 filter: | Montrose 23-298 | | | | |
|---|---|---|---|---|---|---|---|---|
| Sx ID | Tare | Tare QC | Tare - QC | Gross | Gross QC | Gross - QC | Net Mass* | Net Mass |
| date/init: | 5/18/22 AF | 5/20/22 AF | | 6/9/23 ATM | 6/13/23 ATM | | | (mg) |
| time: | 11:34 | 14:24 | | 11:50 | 13:46 | | | |
| Ambient | | | | | | | | |
| Rel. Humidity | 38.7% | 36.5% | | 42.8% | 37.4% | | | |
| Temp (C/F) | 22.0C / 71.6F | 21.8C / 71.2F | | 23.0C / 73.4F | 22.9C / 73.2F | | | |
| Desiccator | | | | | | | | |
| Rel. Humidity | 4.8% | 8.3% | | 3.7% | 2.5% | | | |
| Temp (C/F) | 21.4C / 70.5F | 21.4C / 70.5F | | 22.3C / 72.1F | 22.2C / 72.0F | | | |
| 0.30000g QC | 0.29997 | 0.30001 | | 0.30000 | 0.30000 | | | |
| 0.50000g QC | 0.50002 | 0.49999 | | 0.49998 | 0.49999 | | | |
| 3.00000g QC | 3.00003 | 3.00001 | | 3.00002 | 3.00003 | | | |
| 22-U427 | 0.44329 | 0.44331 | -0.00002 | 0.94987 | 0.95354 | -0.00367 | 0.50658 | 506.58 |
| 22-U423 | 0.45288 | 0.45282 | 0.00006 | 1.21470 | 1.21570 | -0.00100 | 0.76182 | 761.82 |
| 22-U426 | 0.43974 | 0.43986 | -0.00012 | 1.13435 | 1.13113 | 0.00322 | 0.69461 | 694.61 |
| *net mass = gross - tare (g) | | | | | | | | |
| Quartz tissue filters | | | | | | | | |
| Data collected electronically by proprietary BERT II software. | | | | | | | | |

| All masses in grams (g) | | M5 Acetone: Montrose 23-298 | | | | | | |
|---|---|---|---|---|---|---|---|---|
| Sx ID | Tare | Tare QC | Tare - QC | Gross | Gross QC | Gross - QC | *net (g) | net (mg) |
| date/init: | 6/6/23 AF | 6/7/23 AF | | 6/15/23 ATM | 6/16/23 ATM | | (total mass liq) | |
| time: | 13:44 | 13:53 | | 11:07 | 10:52 | | | |
| | | Ambient | | | | | | |
| Rel. Humidity | 39.0% | 41.2% | | 37.6% | 38.8% | | | |
| Temp (C/F) | 21.7C / 71.1F | 21.4C / 70.5F | | 21.6C / 70.9F | 22.1C / 71.8F | | | |
| | | Desiccator | | | | | | |
| Rel. Humidity | 4.0% | 8.5% | | 3.8% | 4.6% | | | |
| Temp (C/F) | 21.2C / 70.2F | 21.6C / 70.9F | | 21.5C / 70.7F | 21.8C / 71.2F | | | |
| 0.30000g QC | 0.30000 | 0.30001 | | 0.30001 | 0.30001 | | | |
| 3.00000g QC | 3.00004 | 3.00006 | | 3.00000 | 3.00001 | | | |
| 100.00000g QC | 100.00013 | 100.00009 | | 99.99999 | 100.00003 | | | |
| Lab Blank | 105.24623 | 105.24602 | 0.00021 | 105.24587 | 105.24558 | 0.00029 | -0.00036 | -0.36 |
| Method Blank | 117.67423 | 117.67403 | 0.00020 | 117.67374 | 117.67351 | 0.00023 | -0.00049 | -0.49 |
| 23-S1272 | 120.48351 | 120.48353 | -0.00002 | 120.68449 | 120.68491 | -0.00042 | 0.20098 | 200.98 |
| 23-S1274 | 121.92500 | 121.92499 | 0.00001 | 121.94501 | 121.94541 | -0.00040 | 0.02001 | 20.01 |
| 23-S1275 | 117.06636 | 117.06631 | 0.00005 | 117.27850 | 117.27871 | -0.00021 | 0.21214 | 212.14 |
| 23-S1277 | 116.59254 | 116.59249 | 0.00005 | 116.60972 | 116.61017 | -0.00045 | 0.01718 | 17.18 |
| 23-S1278 | 98.78281 | 98.78270 | 0.00011 | 99.05605 | 99.05579 | 0.00026 | 0.27324 | 273.24 |
| 23-S1280 | 102.24466 | 102.24464 | 0.00002 | 102.26188 | 102.26173 | 0.00015 | 0.01722 | 17.22 |
| 23-S1281 | 100.24360 | 100.24376 | -0.00016 | 100.24342 | 100.24320 | 0.00022 | -0.00018 | -0.18 |
| *net mass = gross - tare (g) | | | | | | | | |
| 100g weight: S/N 14091 certified value: 100.00004 (99.99994 - 100.00014) | | | | | | | | |
| Data collected electronically by proprietary BERT II software. | | | | | | | | |

| All masses in grams (g) | | | M202: | Montrose 23-298 | | | | |
|---|---|---|---|---|---|---|---|---|
| **Aqueous Phase** | | | | | | | | |
| Sx ID | Tare | Tare QC | Tare - QC | Gross | Gross QC | Gross - QC | *net (g) | net (mg) |
| date/init: | 6/6/23 AF | 6/7/23 AF | | 6/19/23 ATM | 6/20/23 ATM | | (total mass liq) | |
| time: | 14:15 | 14:17 | | 11:32 | 10:12 | | | |
| | | Ambient | | | | | | |
| Rel. Humidity | 48.8% | 41.5% | | 36.3% | 40.0% | | | |
| Temp (C/F) | 21.9C / 71.4F | 21.3C / 70.3F | | 22.3C / 72.1F | 22.8C / 73.0F | | | |
| | | Desiccator | | | | | | |
| Rel. Humidity | 4.0% | 8.5% | | 1.7% | 1.7% | | | |
| Temp (C/F) | 21.2C / 70.2F | 21.6C / 70.9F | | 21.9C / 71.4F | 22.0C / 71.6F | | | |
| 0.30000g QC | 0.29999 | 0.30001 | | 0.30000 | 0.30003 | | | |
| 3.00000g QC | 3.00004 | 3.00004 | | 3.00004 | 3.00000 | | | |
| 100.00000g QC | 100.00009 | 100.00009 | | 99.99998 | 100.00001 | | | |
| Lab Blank | 102.15570 | 102.15541 | 0.00029 | 102.15537 | 102.15497 | 0.00040 | -0.00033 | -0.33 |
| Method Blank | 101.93988 | 101.93976 | 0.00012 | 101.93944 | 101.93957 | -0.00013 | -0.00044 | -0.44 |
| 23-S1273 | 102.80310 | 102.80303 | 0.00007 | 103.02343 | 103.02330 | 0.00013 | 0.22033 | 220.33 |
| 23-S1276 | 101.30395 | 101.30383 | 0.00012 | 101.45306 | 101.45260 | 0.00046 | 0.14911 | 149.11 |
| 23-S1279 | 100.02982 | 100.03000 | -0.00018 | 100.20559 | 100.20553 | 0.00006 | 0.17577 | 175.77 |
| 23-S1282 | 100.35686 | 100.35724 | -0.00038 | 100.35633 | 100.35637 | -0.00004 | -0.00053 | -0.53 |
| | | | | | | | | |
| | | | | | | | | |
| *net mass = gross - tare (g) | | | | | | | | |

| All masses in grams (g) | | | M202: | Montrose 23-298 | | | | |
|---|---|---|---|---|---|---|---|---|
| **Organic Phase** | | | | | | | | |
| Sx ID | Tare | Tare QC | Tare - QC | Gross | Gross QC | Gross - QC | *net (g) | net (mg)* |
| date/init: | 6/6/23 AF | 6/7/23 AF | | 6/13/23 ATM | 6/14/23 ATM | | (total mass liq) | |
| time: | 14:42 | 14:33 | | 15:00 | 14:57 | | | |
| | | Ambient | | | | | | |
| Rel. Humidity | 38.8% | 42.2% | | 39.0% | 38.4% | | | |
| Temp (C/F) | 21.6C / 70.9F | 21.6C / 70.9F | | 23.0C / 73.4F | 22.1C / 71.8F | | | |
| | | Desiccator | | | | | | |
| Rel. Humidity | 4.0% | 8.5% | | 1.6% | 2.8% | | | |
| Temp (C/F) | 21.2C / 70.2F | 21.6C / 70.9F | | 22.5C / 72.5F | 21.8C / 71.2F | | | |
| 0.30000g QC | 0.30000 | 0.29999 | | 0.30001 | 0.30001 | | | |
| 3.00000g QC | 3.00003 | 3.00003 | | 3.00003 | 3.00003 | | | |
| 100.00000g QC | 100.00011 | 100.00008 | | 100.00003 | 100.00009 | | | |
| Lab Blank | 99.57340 | 99.57351 | -0.00011 | 99.57334 | 99.57382 | -0.00048 | -0.00006 | -0.06 |
| Method Blank | 99.37118 | 99.37122 | -0.00004 | 99.37146 | 99.37169 | -0.00023 | 0.00028 | 0.28 |
| 23-S1273 | 102.04479 | 102.04446 | 0.00033 | 102.06985 | 102.07001 | -0.00016 | 0.02506 | 25.06 |
| 23-S1276 | 102.94393 | 102.94362 | 0.00031 | 102.96860 | 102.96863 | -0.00003 | 0.02467 | 24.67 |
| 23-S1279 | 107.73100 | 107.73088 | 0.00012 | 107.74835 | 107.74862 | -0.00027 | 0.01735 | 17.35 |
| *net mass = gross - tare (g) | | | | | | | | |
| Data collected electronically by proprietary BERT II software. | | | | | | | | |

# *QA/QC Report*

Client Name: Montrose Air Quality Services
Project Number: H007
Analytical Technique: ICP-OES
Instrument: Perkin Elmer Optima 8300
Sample Description: EPA Method 29 Cont. 1&3
Report Number: 23-298

**Blank Data**

| Analyte | Sample ID | Measured Conc. µg/L | DL Conc. µg/L |
|---|---|---|---|
| Ag | ICB | < DL | 2.00 |
| Ag | Meth_Blk | < DL | 2.00 |
| Ag | CCB | < DL | 2.00 |
| Ag | CCB | < DL | 2.00 |
| As | ICB | < DL | 7.00 |
| As | Meth_Blk | < DL | 7.00 |
| As | CCB | < DL | 7.00 |
| As | CCB | < DL | 7.00 |
| Ba | ICB | < DL | 0.500 |
| Ba | Meth_Blk | < DL | 0.500 |
| Ba | CCB | < DL | 0.500 |
| Ba | CCB | < DL | 0.500 |
| Be | ICB | < DL | 0.200 |
| Be | Meth_Blk | < DL | 0.200 |
| Be | CCB | < DL | 0.200 |
| Be | CCB | < DL | 0.200 |
| Cr | ICB | < DL | 0.800 |
| Cr | Meth_Blk | < DL | 0.800 |
| Cr | CCB | < DL | 0.800 |
| Cr | CCB | < DL | 0.800 |
| Cu | ICB | < DL | 5.00 |
| Cu | Meth_Blk | < DL | 5.00 |
| Cu | CCB | < DL | 5.00 |
| Cu | CCB | < DL | 5.00 |
| Mn | ICB | < DL | 0.300 |
| Mn | Meth_Blk | < DL | 0.300 |
| Mn | CCB | < DL | 0.300 |
| Mn | CCB | < DL | 0.300 |
| Ni | ICB | < DL | 3.00 |
| Ni | Meth_Blk | < DL | 3.00 |
| Ni | CCB | < DL | 3.00 |
| Ni | CCB | < DL | 3.00 |
| P | ICB | < DL | 20.0 |
| P | Meth_Blk | < DL | 20.0 |
| P | CCB | < DL | 20.0 |
| P | CCB | < DL | 20.0 |
| P | CCB | < DL | 20.0 |
| Sb | ICB | < DL | 5.00 |
| Sb | Meth_Blk | < DL | 5.00 |

ICB: Initial Calibration Blank CCB: Continuing Calibration Blank
*: Sample Media Blank (SM_Blk) concentration in µg/filter
Method Blank is in control if Method Blank results are ≤10% of sample results

# *QA/QC Report*

Client Name: Montrose Air Quality Services
Project Number: H007
Analytical Technique: ICP-OES
Instrument: Perkin Elmer Optima 8300
Sample Description: EPA Method 29 Cont. 1&3
Report Number: 23-298

**Blank Data (continued)**

| Analyte | Sample ID | Measured Conc. µg/L | DL Conc. µg/L |
|---|---|---|---|
| Sb | CCB | < DL | 5.00 |
| Sb | CCB | < DL | 5.00 |
| Se | ICB | < DL | 15.0 |
| Se | Meth_Blk | < DL | 15.0 |
| Se | CCB | < DL | 15.0 |
| Se | CCB | < DL | 15.0 |
| Zn | ICB | < DL | 3.00 |
| Zn | Meth_Blk | < DL | 3.00 |
| Zn | CCB | < DL | 3.00 |
| Zn | CCB | < DL | 3.00 |
| Zn | CCB | < DL | 3.00 |

ICB: Initial Calibration Blank CCB: Continuing Calibration Blank
*: Sample Media Blank (SM_Blk) concentration in µg/filter
Method Blank is in control if Method Blank results are <10% of sample results

**Calibration QC**

| Analyte | Sample ID | Standard Conc. µg/L | Measured Conc. µg/L | Percent Recovery |
|---|---|---|---|---|
| Ag | ICV | 2500. | 2541. | 101.6 |
| Ag | LL-CCV | 10.00 | 8.064 | 80.6 |
| Ag | LL-LCS | 9.000 | 8.486 | 94.3 |
| Ag | CCV | 2500. | 2360. | 94.4 |
| Ag | CCV | 2500. | 2396. | 95.8 |
| As | ICV | 2500. | 2525. | 101.0 |
| As | LL-CCV | 35.00 | 38.06 | 108.7 |
| As | LL-LCS | 20.00 | 19.79 | 99.0 |
| As | CCV | 2500. | 2611. | 104.4 |
| As | CCV | 2500. | 2584. | 103.4 |
| Ba | ICV | 2500. | 2563. | 102.5 |
| Ba | LL-CCV | 2.500 | 2.706 | 108.2 |
| Ba | LL-LCS | 1.500 | 1.586 | 105.7 |
| Ba | CCV | 2500. | 2429. | 97.2 |
| Ba | CCV | 2500. | 2500. | 100.0 |
| Be | ICV | 2500. | 2496. | 99.8 |
| Be | LL-CCV | 1.000 | 1.056 | 105.6 |
| Be | LL-LCS | 0.500 | 0.543 | 108.6 |

ICV: Initial Calibration Verification CCV: Continuing Calibration Verification
Calibration Verification Limits: 90% - 110% Recovery
Low Level-CCV Limits: 60% - 140% Recovery
Low Level-LCS Limits: 50% - 150% Recovery
LL-LCS results are insignificant if sample results are >10x LL-LCS concentration

# *QA/QC Report*

Client Name: Montrose Air Quality Services
Project Number: H007
Analytical Technique: ICP-OES
Instrument: Perkin Elmer Optima 8300
Sample Description: EPA Method 29 Cont. 1&3
Report Number: 23-298

**Calibration QC (continued)**

| Analyte | Sample ID | Standard Conc. µg/L | Measured Conc. µg/L | Percent Recovery |
|---|---|---|---|---|
| Be | CCV | 2500. | 2452. | 98.1 |
| Be | CCV | 2500. | 2488. | 99.5 |
| Cr | ICV | 2500. | 2486. | 99.4 |
| Cr | LL-CCV | 4.000 | 4.707 | 117.7 |
| Cr | LL-LCS | 2.000 | 2.215 | 110.8 |
| Cr | CCV | 2500. | 2463. | 98.5 |
| Cr | CCV | 2500. | 2461. | 98.4 |
| Cu | ICV | 2500. | 2385. | 95.4 |
| Cu | LL-CCV | 25.00 | 26.54 | 106.2 |
| Cu | LL-LCS | 15.00 | 15.96 | 106.4 |
| Cu | CCV | 2500. | 2369. | 94.8 |
| Cu | CCV | 2500. | 2358. | 94.3 |
| Mn | ICV | 2500. | 2560. | 102.4 |
| Mn | LL-CCV | 1.500 | 1.627 | 108.5 |
| Mn | LL-LCS | 1.000 | 1.141 | 114.1 |
| Mn | CCV | 2500. | 2537. | 101.5 |
| Mn | CCV | 2500. | 2533. | 101.3 |
| Ni | ICV | 2500. | 2456. | 98.2 |
| Ni | LL-CCV | 15.00 | 15.55 | 103.7 |
| Ni | LL-LCS | 6.000 | 6.584 | 109.7 |
| Ni | CCV | 2500. | 2404. | 96.2 |
| Ni | CCV | 2500. | 2431. | 97.2 |
| P | ICV | 2500. | 2557. | 102.3 |
| P | LL-CCV | 100.0 | 110.6 | 110.6 |
| P | LL-LCS | 75.00 | 69.47 | 92.6 |
| P | CCV | 2500. | 2496. | 99.8 |
| P | CCV | 2500. | 2440. | 97.6 |
| P | CCV | 2500. | 2488. | 99.5 |
| Sb | ICV | 2500. | 2487. | 99.5 |
| Sb | LL-CCV | 25.00 | 25.70 | 102.8 |
| Sb | LL-LCS | 15.00 | 17.87 | 119.1 |
| Sb | CCV | 2500. | 2460. | 98.4 |
| Sb | CCV | 2500. | 2487. | 99.5 |
| Se | ICV | 2500. | 2543. | 101.7 |
| Se | LL-CCV | 75.00 | 85.89 | 114.5 |
| Se | LL-LCS | 30.00 | 39.36 | 131.2 |
| Se | CCV | 2500. | 2471. | 98.8 |

ICV: Initial Calibration Verification CCV: Continuing Calibration Verification
Calibration Verification Limits: 90% - 110% Recovery
Low Level-CCV Limits: 60% - 140% Recovery
Low Level-LCS Limits: 50% - 150% Recovery
LL-LCS results are insignificant if sample results are >10x LL-LCS concentration

# *QA/QC Report*

Client Name: Montrose Air Quality Services
Project Number: H007
Analytical Technique: ICP-OES
Instrument: Perkin Elmer Optima 8300
Sample Description: EPA Method 29 Cont. 1&3
Report Number: 23-298

**Calibration QC (continued)**

| Analyte | Sample ID | Standard Conc. µg/L | Measured Conc. µg/L | Percent Recovery |
|---|---|---|---|---|
| Se | CCV | 2500. | 2491. | 99.6 |
| Zn | ICV | 2500. | 2551. | 102.0 |
| Zn | LL-CCV | 15.00 | 16.96 | 113.1 |
| Zn | LL-LCS | 6.000 | 6.786 | 113.1 |
| Zn | CCV | 2500. | 2523. | 100.9 |
| Zn | CCV | 2500. | 2486. | 99.4 |
| Zn | CCV | 2500. | 2523. | 100.9 |

ICV: Initial Calibration Verification CCV: Continuing Calibration Verification
Calibration Verification Limits: 90% - 110% Recovery
Low Level-CCV Limits: 60% - 140% Recovery
Low Level-LCS Limits: 50% - 150% Recovery
LL-LCS results are insignificant if sample results are >10x LL-LCS concentration

**Replicate Data**

| Analyte | Sample ID | Sample Conc. µg/L | Replicate Conc. µg/L | RPD |
|---|---|---|---|---|
| Ag | 23-S1283 | 10.5 | 10.1 | 3.97 |
| As | 23-S1283 | 46.9 | 46.7 | 0.41 |
| Ba | 23-S1283 | 1330 | 1380 | 3.69 |
| Be | 23-S1283 | 2.13 | 2.06 | 3.20 |
| Cr | 23-S1283 | 55.2 | 54.3 | 1.62 |
| Cu | 23-S1283 | 1640 | 1640 | 0.31 |
| Mn | 23-S1283 | 1530 | 1530 | 0.13 |
| Ni | 23-S1283 | 40.2 | 40.8 | 1.33 |
| P | 23-S1283 | 30200 | 31000 | 2.55 |
| Sb | 23-S1283 | < 5 | < 5 | N/C * |
| Se | 23-S1283 | < 15 | < 15 | N/C * |
| Zn | 23-S1283 | 6920 | 7060 | 2.02 |

RPD = {(sample-replicate)/[(sample+replicate)/2]}x100
N/C: RPD is not calculated when sample or replicate is below detection limit
Replicate Limit: 20% RPD
*: per EPA CLP protocol, control limits do not apply if sample and/or replicate concentration is less than 5x the detection limit

**Laboratory Control Sample/Matrix Post Spike Analysis**

| Analyte | Sample ID | Sample Conc. µg/L | Spike Conc. µg/L | Spike Amount µg/L | Percent Recovery |
|---|---|---|---|---|---|
| Ag | LCS | < 2 | 2513. | 2500 | 101. |

LCS Limit: 80% - 120% Recovery Spike Limit: 75% - 125% Recovery

# *QA/QC Report*

Client Name: Montrose Air Quality Services
Project Number: H007
Analytical Technique: ICP-OES
Instrument: Perkin Elmer Optima 8300
Sample Description: EPA Method 29 Cont. 1&3
Report Number: 23-298

**Laboratory Control Sample/Matrix Post Spike Analysis (continued)**

| Analyte | Sample ID | Sample Conc. µg/L | Spike Conc. µg/L | Spike Amount µg/L | Percent Recovery |
|---|---|---|---|---|---|
| Ag | LCS-Duplicate | < 2 | 2465. | 2500 | 98.6 |
| Ag | 23-S1288 | 8.413 | 2361. | 2500 | 94.1 |
| As | LCS | < 7 | 2613. | 2500 | 105. |
| As | LCS-Duplicate | < 7 | 2644. | 2500 | 106. |
| As | 23-S1288 | 36.12 | 2426. | 2500 | 95.6 |
| Ba | LCS | < 0.5 | 2557. | 2500 | 102. |
| Ba | LCS-Duplicate | < 0.5 | 2543. | 2500 | 102. |
| Ba | 23-S1288 | 1045. | 3211. | 2500 | 86.6 |
| Be | LCS | < 0.2 | 2543. | 2500 | 102. |
| Be | LCS-Duplicate | < 0.2 | 2580. | 2500 | 103. |
| Be | 23-S1288 | 0.887 | 2218. | 2500 | 88.7 |
| Cr | LCS | < 0.8 | 2526. | 2500 | 101. |
| Cr | LCS-Duplicate | < 0.8 | 2533. | 2500 | 101. |
| Cr | 23-S1288 | 28.73 | 2317. | 2500 | 91.5 |
| Cu | LCS | < 5 | 2508. | 2500 | 100. |
| Cu | LCS-Duplicate | < 5 | 2523. | 2500 | 101. |
| Cu | 23-S1288 | 966.7 | 3379. | 2500 | 96.5 |
| Mn | LCS | < 0.3 | 2604. | 2500 | 104. |
| Mn | LCS-Duplicate | < 0.3 | 2618. | 2500 | 105. |
| Mn | 23-S1288 | 706.6 | 2933. | 2500 | 89.1 |
| Ni | LCS | < 3 | 2531. | 2500 | 101. |
| Ni | LCS-Duplicate | < 3 | 2560. | 2500 | 102. |
| Ni | 23-S1288 | 23.40 | 2231. | 2500 | 88.3 |
| P | LCS | < 20 | 2586. | 2500 | 103. |
| P | LCS-Duplicate | < 20 | 2626. | 2500 | 105. |
| P | 23-S1288 | 17970 | 41560 | 25000 | 94.4 |
| Sb | LCS | < 5 | 2599. | 2500 | 104. |
| Sb | LCS-Duplicate | < 5 | 2642. | 2500 | 106. |
| Sb | 23-S1288 | < 5 | 2364. | 2500 | 94.6 |
| Se | LCS | < 15 | 2726. | 2500 | 109. |
| Se | LCS-Duplicate | < 15 | 2756. | 2500 | 110. |
| Se | 23-S1288 | < 15 | 2456. | 2500 | 98.2 |
| Zn | LCS | < 3 | 2617. | 2500 | 105. |
| Zn | LCS-Duplicate | < 3 | 2638. | 2500 | 106. |
| Zn | 23-S1288 | 6040. | 18770 | 12500 | 102. |

LCS Limit: 80% - 120% Recovery  Spike Limit: 75% - 125% Recovery

# *QA/QC Report*

Client Name: Montrose Air Quality Services
Project Number: H007
Analytical Technique: ICP-OES
Instrument: Perkin Elmer Optima 8300
Sample Description: EPA Method 29 Cont. 1&3
Report Number: 23-298

**LCS Duplicate Data**

| Analyte | Sample ID | Original Conc. µg/L | Replicate Conc. µg/L | RPD |
|---|---|---|---|---|
| Ag | LCS-Duplicate | 2513. | 2465. | 1.93 |
| As | LCS-Duplicate | 2613. | 2644. | 1.18 |
| Ba | LCS-Duplicate | 2557. | 2543. | 0.55 |
| Be | LCS-Duplicate | 2543. | 2580. | 1.44 |
| Cr | LCS-Duplicate | 2526. | 2533. | 0.28 |
| Cu | LCS-Duplicate | 2508. | 2523. | 0.60 |
| Mn | LCS-Duplicate | 2604. | 2618. | 0.54 |
| Ni | LCS-Duplicate | 2531. | 2560. | 1.14 |
| P | LCS-Duplicate | 2586. | 2626. | 1.53 |
| Sb | LCS-Duplicate | 2599. | 2642. | 1.64 |
| Se | LCS-Duplicate | 2726. | 2756. | 1.09 |
| Zn | LCS-Duplicate | 2617. | 2638. | 0.80 |

RPD = {(sample-duplicate)/[(sample+duplicate)/2]}x100 Duplicate Limit: 20% RPD

# *QA/QC Report*

Client Name: Montrose Air Quality Services
Project Number: H007
Analytical Technique: ICP-MS
Instrument: Agilent 7850
Sample Description: EPA Method 29 Cont. 1&3
Report Number: 23-298

**Blank Data**

| Analyte | Sample ID | Measured Conc. µg/L | DL Conc. µg/L |
|---|---|---|---|
| Cd | ICB | < DL | 0.020 |
| Cd | CCB | < DL | 0.020 |
| Cd | CCB | < DL | 0.020 |
| Cd | Meth_Blk | < 0.2 | 0.020 |
| Cd | CCB | < DL | 0.020 |
| Cd | CCB | < DL | 0.020 |
| Co | ICB | < DL | 0.050 |
| Co | CCB | < DL | 0.050 |
| Co | CCB | < DL | 0.050 |
| Co | Meth_Blk | < 0.5 | 0.050 |
| Co | CCB | < DL | 0.050 |
| Co | CCB | < DL | 0.050 |
| Pb | ICB | < DL | 0.020 |
| Pb | CCB | < DL | 0.020 |
| Pb | CCB | < DL | 0.020 |
| Pb | Meth_Blk | < 0.2 | 0.020 |
| Pb | CCB | < DL | 0.020 |
| Pb | CCB | < DL | 0.020 |
| Tl | ICB | < DL | 0.040 |
| Tl | CCB | < DL | 0.040 |
| Tl | CCB | < DL | 0.040 |
| Tl | Meth_Blk | < 0.4 | 0.040 |
| Tl | CCB | < DL | 0.040 |
| Tl | CCB | < DL | 0.040 |

ICB: Initial Calibration Blank CCB: Continuing Calibration Blank
*: Sample Media Blank (SM_Blk) concentration in µg/filter
Method Blank is in control if Method Blank results are <10% of sample results

**Calibration QC**

| Analyte | Sample ID | Standard Conc. µg/L | Measured Conc. µg/L | Percent Recovery |
|---|---|---|---|---|
| Cd | ICV | 100.0 | 100.7 | 100.7 |
| Cd | CCV | 100.0 | 104.9 | 104.9 |
| Cd | CCV | 100.0 | 104.2 | 104.2 |
| Cd | LL-LCS | 1.500 | 1.461 | 97.4 |
| Cd | CCV | 100.0 | 104.7 | 104.7 |

ICV: Initial Calibration Verification CCV: Continuing Calibration Verification
Calibration Verification Limits: 90% - 110% Recovery
Low Level-CCV Limits: 60% - 140% Recovery
Low Level-LCS Limits: 50% - 150% Recovery
LL-LCS results are insignificant if sample results are >10x LL-LCS concentration

# *QA/QC Report*

Client Name: Montrose Air Quality Services
Project Number: H007
Analytical Technique: ICP-MS
Instrument: Agilent 7850
Sample Description: EPA Method 29 Cont. 1&3
Report Number: 23-298

**Calibration QC (continued)**

| Analyte | Sample ID | Standard Conc. µg/L | Measured Conc. µg/L | Percent Recovery |
|---|---|---|---|---|
| Cd | CCV | 100.0 | 104.0 | 104.0 |
| Co | ICV | 100.0 | 100.3 | 100.3 |
| Co | CCV | 100.0 | 105.6 | 105.6 |
| Co | CCV | 100.0 | 105.8 | 105.8 |
| Co | LL-LCS | 1.500 | 1.583 | 105.5 |
| Co | CCV | 100.0 | 106.2 | 106.2 |
| Co | CCV | 100.0 | 104.7 | 104.7 |
| Pb | ICV | 100.0 | 99.85 | 99.8 |
| Pb | CCV | 100.0 | 100.6 | 100.6 |
| Pb | CCV | 100.0 | 100.5 | 100.5 |
| Pb | LL-LCS | 15.00 | 13.88 | 92.5 |
| Pb | CCV | 100.0 | 100.7 | 100.7 |
| Pb | CCV | 100.0 | 100.2 | 100.2 |
| Tl | ICV | 100.0 | 99.62 | 99.6 |
| Tl | CCV | 100.0 | 100.5 | 100.5 |
| Tl | CCV | 100.0 | 100.1 | 100.1 |
| Tl | LL-LCS | 30.00 | 28.09 | 93.6 |
| Tl | CCV | 100.0 | 102.1 | 102.1 |
| Tl | CCV | 100.0 | 102.0 | 102.0 |

ICV: Initial Calibration Verification CCV: Continuing Calibration Verification
Calibration Verification Limits: 90% - 110% Recovery
Low Level-CCV Limits: 60% - 140% Recovery
Low Level-LCS Limits: 50% - 150% Recovery
LL-LCS results are insignificant if sample results are >10x LL-LCS concentration

**Replicate Data**

| Analyte | Sample ID | Sample Conc. µg/L | Replicate Conc. µg/L | RPD |
|---|---|---|---|---|
| Cd | 23-S1283 | 12.2 | 12.0 | 0.99 |
| Co | 23-S1283 | 21.3 | 21.3 | 0.23 |
| Pb | 23-S1283 | 123. | 122. | 1.06 |
| Tl | 23-S1283 | 2.07 | 2.05 | 1.12 |

RPD = {(sample-replicate)/[(sample+replicate)/2]}x100
N/C: RPD is not calculated when sample or replicate is below detection limit
Replicate Limit: 20% RPD
*: per EPA CLP protocol, control limits do not apply if sample and/or replicate concentration is less than 5x the detection limit

# *QA/QC Report*

Client Name: Montrose Air Quality Services
Project Number: H007
Analytical Technique: ICP-MS
Instrument: Agilent 7850
Sample Description: EPA Method 29 Cont. 1&3
Report Number: 23-298

**Laboratory Control Sample/Matrix Post Spike Analysis**

| Analyte | Sample ID | Sample Conc. µg/L | Spike Conc. µg/L | Spike Amount µg/L | Percent Recovery |
|---|---|---|---|---|---|
| Cd | LCS | < 0.2 | 2597. | 2500 | 104. |
| Cd | LCS-Duplicate | < 0.2 | 2596. | 2500 | 104. |
| Cd | 23-S1288 | 7.929 | 1051. | 1000 | 104. |
| Co | LCS | < 0.5 | 2595. | 2500 | 104. |
| Co | LCS-Duplicate | < 0.5 | 2642. | 2500 | 106. |
| Co | 23-S1288 | 8.802 | 1028. | 1000 | 102. |
| Pb | LCS | < 0.2 | 2470. | 2500 | 98.8 |
| Pb | LCS-Duplicate | < 0.2 | 2470. | 2500 | 98.8 |
| Pb | 23-S1288 | 64.20 | 1047. | 1000 | 98.3 |
| Tl | LCS | < 0.4 | 2475. | 2500 | 99.0 |
| Tl | LCS-Duplicate | < 0.4 | 2501. | 2500 | 100. |
| Tl | 23-S1288 | 1.377 | 1007. | 1000 | 101. |

LCS Limit: 80% - 120% Recovery Spike Limit: 75% - 125% Recovery

**LCS Duplicate Data**

| Analyte | Sample ID | Original Conc. µg/L | Replicate Conc. µg/L | RPD |
|---|---|---|---|---|
| Cd | LCS-Duplicate | 2597. | 2596. | 0.04 |
| Co | LCS-Duplicate | 2595. | 2642. | 1.79 |
| Pb | LCS-Duplicate | 2470. | 2470. | 0.00 |
| Tl | LCS-Duplicate | 2475. | 2501. | 1.05 |

RPD = {(sample-duplicate)/[(sample+duplicate)/2]}x100 Duplicate Limit: 20% RPD

# *QA/QC Report*

Client Name: Montrose Air Quality Services
Project Number: H007
Analytical Technique: ICP-OES
Instrument: Perkin Elmer Optima 8300
Sample Description: EPA Method 29 Cont. 4
Report Number: 23-298

**Blank Data**

| Analyte | Sample ID | Measured Conc. µg/L | DL Conc. µg/L |
|---|---|---|---|
| Ag | ICB | < DL | 2.00 |
| Ag | Meth_Blk | < DL | 2.00 |
| Ag | CCB | < DL | 2.00 |
| Ag | CCB | < DL | 2.00 |
| As | ICB | < DL | 7.00 |
| As | Meth_Blk | < DL | 7.00 |
| As | CCB | < DL | 7.00 |
| As | CCB | < DL | 7.00 |
| Ba | ICB | < DL | 0.500 |
| Ba | Meth_Blk | 0.961 | 0.500 |
| Ba | CCB | < DL | 0.500 |
| Ba | CCB | < DL | 0.500 |
| Be | ICB | < DL | 0.200 |
| Be | Meth_Blk | < DL | 0.200 |
| Be | CCB | < DL | 0.200 |
| Be | CCB | < DL | 0.200 |
| Cd | ICB | < DL | 0.400 |
| Cd | Meth_Blk | < DL | 0.400 |
| Cd | CCB | < DL | 0.400 |
| Cd | CCB | < DL | 0.400 |
| Co | ICB | < DL | 0.500 |
| Co | Meth_Blk | < DL | 0.500 |
| Co | CCB | < DL | 0.500 |
| Co | CCB | < DL | 0.500 |
| Cr | ICB | < DL | 0.800 |
| Cr | Meth_Blk | < DL | 0.800 |
| Cr | CCB | < DL | 0.800 |
| Cr | CCB | < DL | 0.800 |
| Cu | ICB | < DL | 5.00 |
| Cu | Meth_Blk | < DL | 5.00 |
| Cu | CCB | < DL | 5.00 |
| Cu | CCB | < DL | 5.00 |
| Mn | ICB | < DL | 0.300 |
| Mn | Meth_Blk | < DL | 0.300 |
| Mn | CCB | < DL | 0.300 |
| Mn | CCB | < DL | 0.300 |
| Ni | ICB | < DL | 3.00 |
| Ni | Meth_Blk | < DL | 3.00 |
| Ni | CCB | < DL | 3.00 |

ICB: Initial Calibration Blank CCB: Continuing Calibration Blank
*: Sample Media Blank (SM_Blk) concentration in µg/filter
Method Blank is in control if Method Blank results are ≤10% of sample results

# *QA/QC Report*

Client Name: Montrose Air Quality Services
Project Number: H007
Analytical Technique: ICP-OES
Instrument: Perkin Elmer Optima 8300
Sample Description: EPA Method 29 Cont. 4
Report Number: 23-298

**Blank Data (continued)**

| Analyte | Sample ID | Measured Conc. µg/L | DL Conc. µg/L |
|---|---|---|---|
| Ni | CCB | < DL | 3.00 |
| P | ICB | < DL | 20.0 |
| P | Meth_Blk | < DL | 20.0 |
| P | CCB | < DL | 20.0 |
| P | CCB | < DL | 20.0 |
| Pb | ICB | < DL | 5.00 |
| Pb | Meth_Blk | < DL | 5.00 |
| Pb | CCB | < DL | 5.00 |
| Pb | CCB | < DL | 5.00 |
| Sb | ICB | < DL | 5.00 |
| Sb | Meth_Blk | < DL | 5.00 |
| Sb | CCB | < DL | 5.00 |
| Sb | CCB | < DL | 5.00 |
| Se | ICB | < DL | 15.0 |
| Se | Meth_Blk | < DL | 15.0 |
| Se | CCB | < DL | 15.0 |
| Se | CCB | < DL | 15.0 |
| Tl | ICB | < DL | 10.0 |
| Tl | Meth_Blk | < DL | 10.0 |
| Tl | CCB | < DL | 10.0 |
| Tl | CCB | < DL | 10.0 |
| Zn | ICB | < DL | 3.00 |
| Zn | Meth_Blk | < DL | 3.00 |
| Zn | CCB | < DL | 3.00 |
| Zn | CCB | < DL | 3.00 |

ICB: Initial Calibration Blank CCB: Continuing Calibration Blank
*: Sample Media Blank (SM_Blk) concentration in µg/filter
Method Blank is in control if Method Blank results are <10% of sample results

**Calibration QC**

| Analyte | Sample ID | Standard Conc. µg/L | Measured Conc. µg/L | Percent Recovery |
|---|---|---|---|---|
| Ag | ICV | 2500. | 2539. | 101.6 |
| Ag | LL-CCV | 10.00 | 7.965 | 79.6 |
| Ag | LL-LCS | 9.000 | 6.963 | 77.4 |
| Ag | CCV | 2500. | 2476. | 99.0 |

ICV: Initial Calibration Verification CCV: Continuing Calibration Verification
Calibration Verification Limits: 90% - 110% Recovery
Low Level-CCV Limits: 60% - 140% Recovery
Low Level-LCS Limits: 50% - 150% Recovery
LL-LCS results are insignificant if sample results are >10x LL-LCS concentration

# *QA/QC Report*

Client Name: Montrose Air Quality Services
Project Number: H007
Analytical Technique: ICP-OES
Instrument: Perkin Elmer Optima 8300
Sample Description: EPA Method 29 Cont. 4
Report Number: 23-298

**Calibration QC (continued)**

| Analyte | Sample ID | Standard Conc. µg/L | Measured Conc. µg/L | Percent Recovery |
|---|---|---|---|---|
| Ag | CCV | 2500. | 2438. | 97.5 |
| As | ICV | 2500. | 2337. | 93.5 |
| As | LL-CCV | 35.00 | 29.63 | 84.7 |
| As | LL-LCS | 20.00 | 13.38 | 66.9 |
| As | CCV | 2500. | 2337. | 93.5 |
| As | CCV | 2500. | 2328. | 93.1 |
| Ba | ICV | 2500. | 2525. | 101.0 |
| Ba | LL-CCV | 2.500 | 3.128 | 125.1 |
| Ba | LL-LCS | 1.500 | 3.749 | 249.9 |
| Ba | CCV | 2500. | 2560. | 102.4 |
| Ba | CCV | 2500. | 2564. | 102.6 |
| Be | ICV | 2500. | 2334. | 93.4 |
| Be | LL-CCV | 1.000 | 0.971 | 97.1 |
| Be | LL-LCS | 0.500 | 0.416 | 83.2 |
| Be | CCV | 2500. | 2347. | 93.9 |
| Be | CCV | 2500. | 2325. | 93.0 |
| Cd | ICV | 2500. | 2320. | 92.8 |
| Cd | LL-CCV | 2.000 | 1.981 | 99.0 |
| Cd | LL-LCS | 1.500 | 1.068 | 71.2 |
| Cd | CCV | 2500. | 2301. | 92.0 |
| Cd | CCV | 2500. | 2308. | 92.3 |
| Co | ICV | 2500. | 2267. | 90.7 |
| Co | LL-CCV | 2.500 | 2.880 | 115.2 |
| Co | LL-LCS | 1.500 | 1.676 | 111.7 |
| Co | CCV | 2500. | 2259. | 90.4 |
| Co | CCV | 2500. | 2262. | 90.5 |
| Cr | ICV | 2500. | 2326. | 93.0 |
| Cr | LL-CCV | 4.000 | 4.299 | 107.5 |
| Cr | LL-LCS | 2.000 | 2.666 | 133.3 |
| Cr | CCV | 2500. | 2318. | 92.7 |
| Cr | CCV | 2500. | 2321. | 92.8 |
| Cu | ICV | 2500. | 2419. | 96.8 |
| Cu | LL-CCV | 25.00 | 27.78 | 111.1 |
| Cu | LL-LCS | 15.00 | 15.17 | 101.1 |
| Cu | CCV | 2500. | 2414. | 96.6 |
| Cu | CCV | 2500. | 2412. | 96.5 |
| Mn | ICV | 2500. | 2357. | 94.3 |

ICV: Initial Calibration Verification CCV: Continuing Calibration Verification
Calibration Verification Limits: 90% - 110% Recovery
Low Level-CCV Limits: 60% - 140% Recovery
Low Level-LCS Limits: 50% - 150% Recovery
LL-LCS results are insignificant if sample results are >10x LL-LCS concentration

# *QA/QC Report*

Client Name: Montrose Air Quality Services
Project Number: H007
Analytical Technique: ICP-OES
Instrument: Perkin Elmer Optima 8300
Sample Description: EPA Method 29 Cont. 4
Report Number: 23-298

**Calibration QC (continued)**

| Analyte | Sample ID | Standard Conc. µg/L | Measured Conc. µg/L | Percent Recovery |
|---|---|---|---|---|
| Mn | LL-CCV | 1.500 | 1.531 | 102.1 |
| Mn | LL-LCS | 1.000 | 1.106 | 110.6 |
| Mn | CCV | 2500. | 2342. | 93.7 |
| Mn | CCV | 2500. | 2347. | 93.9 |
| Ni | ICV | 2500. | 2266. | 90.6 |
| Ni | LL-CCV | 15.00 | 14.87 | 99.1 |
| Ni | LL-LCS | 6.000 | 4.967 | 82.8 |
| Ni | CCV | 2500. | 2272. | 90.9 |
| Ni | CCV | 2500. | 2264. | 90.6 |
| P | ICV | 2500. | 2555. | 102.2 |
| P | LL-CCV | 100.0 | 110.1 | 110.1 |
| P | LL-LCS | 75.00 | 87.82 | 117.1 |
| P | CCV | 2500. | 2504. | 100.2 |
| P | CCV | 2500. | 2496. | 99.8 |
| Pb | ICV | 2500. | 2282. | 91.3 |
| Pb | LL-CCV | 25.00 | 22.98 | 91.9 |
| Pb | LL-LCS | 15.00 | 14.48 | 96.5 |
| Pb | CCV | 2500. | 2289. | 91.6 |
| Pb | CCV | 2500. | 2281. | 91.2 |
| Sb | ICV | 2500. | 2450. | 98.0 |
| Sb | LL-CCV | 25.00 | 27.86 | 111.4 |
| Sb | LL-LCS | 15.00 | 14.17 | 94.5 |
| Sb | CCV | 2500. | 2406. | 96.2 |
| Sb | CCV | 2500. | 2405. | 96.2 |
| Se | ICV | 2500. | 2333. | 93.3 |
| Se | LL-CCV | 75.00 | 72.67 | 96.9 |
| Se | LL-LCS | 30.00 | 27.38 | 91.3 |
| Se | CCV | 2500. | 2304. | 92.2 |
| Se | CCV | 2500. | 2306. | 92.2 |
| Tl | ICV | 2500. | 2288. | 91.5 |
| Tl | LL-CCV | 50.00 | 55.00 | 110.0 |
| Tl | LL-LCS | 30.00 | 27.57 | 91.9 |
| Tl | CCV | 2500. | 2297. | 91.9 |
| Tl | CCV | 2500. | 2291. | 91.6 |
| Zn | ICV | 2500. | 2347. | 93.9 |
| Zn | LL-CCV | 15.00 | 16.37 | 109.1 |
| Zn | LL-LCS | 6.000 | 7.037 | 117.3 |

ICV: Initial Calibration Verification CCV: Continuing Calibration Verification
Calibration Verification Limits: 90% - 110% Recovery
Low Level-CCV Limits: 60% - 140% Recovery
Low Level-LCS Limits: 50% - 150% Recovery
LL-LCS results are insignificant if sample results are >10x LL-LCS concentration

# *QA/QC Report*

Client Name: Montrose Air Quality Services
Project Number: H007
Analytical Technique: ICP-OES
Instrument: Perkin Elmer Optima 8300
Sample Description: EPA Method 29 Cont. 4
Report Number: 23-298

**Calibration QC (continued)**

| Analyte | Sample ID | Standard Conc. µg/L | Measured Conc. µg/L | Percent Recovery |
|---|---|---|---|---|
| Zn | CCV | 2500. | 2341. | 93.6 |
| Zn | CCV | 2500. | 2344. | 93.8 |

ICV: Initial Calibration Verification CCV: Continuing Calibration Verification
Calibration Verification Limits: 90% - 110% Recovery
Low Level-CCV Limits: 60% - 140% Recovery
Low Level-LCS Limits: 50% - 150% Recovery
LL-LCS results are insignificant if sample results are >10x LL-LCS concentration

**Replicate Data**

| Analyte | Sample ID | Sample Conc. µg/L | Replicate Conc. µg/L | RPD |
|---|---|---|---|---|
| Ag | 23-S1284 | 2.88 | 2.43 | 17.0 * |
| As | 23-S1284 | < 7 | < 7 | N/C * |
| Ba | 23-S1284 | 10.0 | 9.92 | 1.00 |
| Be | 23-S1284 | < 0.2 | < 0.2 | N/C * |
| Cd | 23-S1284 | < 0.4 | < 0.4 | N/C * |
| Co | 23-S1284 | 2.35 | 2.35 | 0.17 * |
| Cr | 23-S1284 | 2.07 | 2.03 | 1.81 * |
| Cu | 23-S1284 | < 5 | < 5 | N/C * |
| Mn | 23-S1284 | 2.20 | 2.09 | 5.13 |
| Ni | 23-S1284 | < 3 | < 3 | N/C * |
| P | 23-S1284 | 53.0 | 46.3 | 13.4 * |
| Pb | 23-S1284 | < 5 | < 5 | N/C * |
| Sb | 23-S1284 | < 5 | < 5 | N/C * |
| Se | 23-S1284 | < 15 | < 15 | N/C * |
| Tl | 23-S1284 | < 10 | < 10 | N/C * |
| Zn | 23-S1284 | 40.2 | 40.6 | 0.99 |

RPD = {(sample-replicate)/[(sample+replicate)/2]}x100
N/C: RPD is not calculated when sample or replicate is below detection limit
Replicate Limit: 20% RPD
*: per EPA CLP protocol, control limits do not apply if sample and/or replicate concentration is less than 5x the detection limit

**Laboratory Control Sample/Matrix Post Spike Analysis**

| Analyte | Sample ID | Sample Conc. µg/L | Spike Conc. µg/L | Spike Amount µg/L | Percent Recovery |
|---|---|---|---|---|---|
| Ag | LCS | < 2 | 2313. | 2500 | 92.5 |

LCS Limit: 80% - 120% Recovery Spike Limit: 75% - 125% Recovery

# *QA/QC Report*

Client Name: Montrose Air Quality Services
Project Number: H007
Analytical Technique: ICP-OES
Instrument: Perkin Elmer Optima 8300
Sample Description: EPA Method 29 Cont. 4
Report Number: 23-298

**Laboratory Control Sample/Matrix Post Spike Analysis (continued)**

| Analyte | Sample ID | Sample Conc. µg/L | Spike Conc. µg/L | Spike Amount µg/L | Percent Recovery |
|---|---|---|---|---|---|
| Ag | LCS-Duplicate | < 2 | 2313. | 2500 | 92.5 |
| Ag | 23-S1289 | < 2 | 2284. | 2500 | 91.4 |
| As | kv:LL-LCS | 13.38 | 2237. | 2500 | 88.9 |
| As | kv:LL-LCS | 13.38 | 2197. | 2500 | 87.3 |
| As | 23-S1289 | < 7 | 2078. | 2500 | 83.1 |
| Ba | LCS | 0.961 | 2488. | 2500 | 99.5 |
| Ba | LCS-Duplicate | 0.961 | 2443. | 2500 | 97.7 |
| Ba | 23-S1289 | 3.797 | 2380. | 2500 | 95.0 |
| Be | kv:LL-LCS | 0.416 | 2263. | 2500 | 90.5 |
| Be | kv:LL-LCS | 0.416 | 2195. | 2500 | 87.8 |
| Be | 23-S1289 | < 0.2 | 2140. | 2500 | 85.6 |
| Cd | kv:LL-LCS | 1.068 | 2226. | 2500 | 89.0 |
| Cd | kv:LL-LCS | 1.068 | 2188. | 2500 | 87.5 |
| Cd | 23-S1289 | 6.071 | 2176. | 2500 | 86.8 |
| Co | LCS | < 0.5 | 2197. | 2500 | 87.9 |
| Co | LCS-Duplicate | < 0.5 | 2166. | 2500 | 86.6 |
| Co | 23-S1289 | 0.813 | 2099. | 2500 | 83.9 |
| Cr | kv:LL-LCS | 2.666 | 2267. | 2500 | 90.6 |
| Cr | kv:LL-LCS | 2.666 | 2248. | 2500 | 89.8 |
| Cr | 23-S1289 | 2.534 | 2167. | 2500 | 86.6 |
| Cu | LCS | < 5 | 2382. | 2500 | 95.3 |
| Cu | LCS-Duplicate | < 5 | 2399. | 2500 | 96.0 |
| Cu | 23-S1289 | 8.039 | 2434. | 2500 | 97.0 |
| Mn | kv:LL-LCS | 1.106 | 2283. | 2500 | 91.3 |
| Mn | kv:LL-LCS | 1.106 | 2255. | 2500 | 90.2 |
| Mn | 23-S1289 | 4.426 | 2173. | 2500 | 86.7 |
| Ni | kv:LL-LCS | 4.967 | 2197. | 2500 | 87.7 |
| Ni | kv:LL-LCS | 4.967 | 2171. | 2500 | 86.6 |
| Ni | 23-S1289 | < 3 | 2120. | 2500 | 84.8 |
| P | LCS | < 20 | 2457. | 2500 | 98.3 |
| P | LCS-Duplicate | < 20 | 2395. | 2500 | 95.8 |
| P | 23-S1289 | 22.73 | 2351. | 2500 | 93.1 |
| Pb | kv:LL-LCS | 14.48 | 2207. | 2500 | 87.7 |
| Pb | kv:LL-LCS | 14.48 | 2183. | 2500 | 86.7 |
| Pb | 23-S1289 | < 5 | 2152. | 2500 | 86.1 |
| Sb | LCS | < 5 | 2432. | 2500 | 97.3 |

LCS Limit: 80% - 120% Recovery Spike Limit: 75% - 125% Recovery

# *QA/QC Report*

Client Name: Montrose Air Quality Services
Project Number: H007
Analytical Technique: ICP-OES
Instrument: Perkin Elmer Optima 8300
Sample Description: EPA Method 29 Cont. 4
Report Number: 23-298

**Laboratory Control Sample/Matrix Post Spike Analysis (continued)**

| Analyte | Sample ID | Sample Conc. µg/L | Spike Conc. µg/L | Spike Amount µg/L | Percent Recovery |
|---|---|---|---|---|---|
| Sb | LCS-Duplicate | < 5 | 2420. | 2500 | 96.8 |
| Sb | 23-S1289 | < 5 | 2298. | 2500 | 91.9 |
| Se | kv:LL-LCS | 27.38 | 2227. | 2500 | 88.0 |
| Se | kv:LL-LCS | 27.38 | 2194. | 2500 | 86.7 |
| Se | 23-S1289 | < 15 | 2132. | 2500 | 85.3 |
| Tl | kv:LL-LCS | 27.57 | 2191. | 2500 | 86.5 |
| Tl | kv:LL-LCS | 27.57 | 2154. | 2500 | 85.1 |
| Tl | 23-S1289 | < 10 | 2147. | 2500 | 85.9 |
| Zn | kv:LL-LCS | 7.037 | 2248. | 2500 | 89.6 |
| Zn | kv:LL-LCS | 7.037 | 2215. | 2500 | 88.3 |
| Zn | 23-S1289 | 154.2 | 2343. | 2500 | 87.6 |

LCS Limit: 80% - 120% Recovery Spike Limit: 75% - 125% Recovery

**LCS Duplicate Data**

| Analyte | Sample ID | Original Conc. µg/L | Replicate Conc. µg/L | RPD |
|---|---|---|---|---|
| Ag | LCS-Duplicate | 2313. | 2313. | 0.00 |
| As | LCS-Duplicate | 2237. | 2197. | 1.80 |
| Ba | LCS-Duplicate | 2488. | 2443. | 1.83 |
| Be | LCS-Duplicate | 2263. | 2195. | 3.05 |
| Cd | LCS-Duplicate | 2226. | 2188. | 1.72 |
| Co | LCS-Duplicate | 2197. | 2166. | 1.42 |
| Cr | LCS-Duplicate | 2267. | 2248. | 0.84 |
| Cu | LCS-Duplicate | 2382. | 2399. | 0.71 |
| Mn | LCS-Duplicate | 2283. | 2255. | 1.23 |
| Ni | LCS-Duplicate | 2197. | 2171. | 1.19 |
| P | LCS-Duplicate | 2457. | 2395. | 2.56 |
| Pb | LCS-Duplicate | 2207. | 2183. | 1.09 |
| Sb | LCS-Duplicate | 2432. | 2420. | 0.49 |
| Se | LCS-Duplicate | 2227. | 2194. | 1.49 |
| Tl | LCS-Duplicate | 2191. | 2154. | 1.70 |
| Zn | LCS-Duplicate | 2248. | 2215. | 1.48 |

RPD = {(sample-duplicate)/[(sample+duplicate)/2]}x100 Duplicate Limit: 20% RPD

## ICP RAW DATA

Available upon request

# *QA/QC Report*

Client Name: Montrose Air Quality Services
Project Number: H007
Analytical Technique: Cold Vapor Atomic Absorption
Instrument: Nippon 3320A CVAA
Sample Description: EPA Method 29
Report Number: 23-298

**Blank Data**

| Analyte | Sample ID | Measured Conc. µg/L | DL Conc. µg/L |
|---|---|---|---|
| Hg | ICB | < DL | 0.007 |
| Hg | Meth_Blk | < DL | 0.007 |
| Hg | CCB | < DL | 0.007 |
| Hg | CCB | < DL | 0.007 |
| Hg | CCB | < DL | 0.007 |

ICB: Initial Calibration Blank CCB: Continuing Calibration Blank
*: Sample Media Blank (SM_Blk) concentration in µg/filter
Method Blank is in control if Method Blank results are <10% of sample results

**Calibration QC**

| Analyte | Sample ID | Standard Conc. µg/L | Measured Conc. µg/L | Percent Recovery |
|---|---|---|---|---|
| Hg | ICV | 5.00 | 5.10 | 102.1 |
| Hg | LL-LCS | 0.020 | 0.017 | 85.0 |
| Hg | LL-LCS | 0.020 | 0.016 | 80.0 |
| Hg | CCV | 5.00 | 5.32 | 106.4 |
| Hg | CCV | 5.00 | 5.12 | 102.3 |
| Hg | CCV | 5.00 | 5.07 | 101.4 |

ICV: Initial Calibration Verification CCV: Continuing Calibration Verification
Calibration Verification Limits: 90% - 110% Recovery
Low Level-LCS Limits: 50% - 150% Recovery
LL-LCS results are insignificant if sample results are >10x LL-LCS concentration

**Duplicate Data**

All samples analyzed in duplicate. The reported concentrations are the average of the two measurements.

**Laboratory Control Sample/Matrix Spike Analysis**

| Analyte | Sample ID | Sample Conc. µg/L | Spike Conc. µg/L | Spike Amount µg/L | Percent Recovery |
|---|---|---|---|---|---|
| Hg | 23-S1283 | 0.010 | 5.07 | 5.00 | 101. |

LCS Limit: 80% - 120% Recovery Spike Limit: 75% - 125% Recovery

# *QA/QC Report*

Client Name: Montrose Air Quality Services
Project Number: H007
Analytical Technique: Cold Vapor Atomic Absorption
Instrument: Nippon 3320A CVAA
Sample Description: EPA Method 29
Report Number: 23-298

**Blank Data**

| Analyte | Sample ID | Measured Conc. µg/L | DL Conc. µg/L |
|---|---|---|---|
| Hg | ICB | < DL | 0.007 |
| Hg | CCB | < DL | 0.007 |
| Hg | CCB | < DL | 0.007 |
| Hg | CCB | < DL | 0.007 |

ICB: Initial Calibration Blank CCB: Continuing Calibration Blank
*: Sample Media Blank (SM_Blk) concentration in µg/filter
Method Blank is in control if Method Blank results are <10% of sample results

**Calibration QC**

| Analyte | Sample ID | Standard Conc. µg/L | Measured Conc. µg/L | Percent Recovery |
|---|---|---|---|---|
| Hg | ICV | 5.00 | 5.10 | 101.9 |
| Hg | LL-LCS | 0.020 | 0.022 | 110.0 |
| Hg | CCV | 5.00 | 5.06 | 101.3 |
| Hg | CCV | 5.00 | 5.07 | 101.4 |
| Hg | CCV | 5.00 | 5.31 | 106.2 |

ICV: Initial Calibration Verification CCV: Continuing Calibration Verification
Calibration Verification Limits: 90% - 110% Recovery
Low Level-LCS Limits: 50% - 150% Recovery
LL-LCS results are insignificant if sample results are >10x LL-LCS concentration

**Duplicate Data**

All samples analyzed in duplicate. The reported concentrations are the average of the two measurements.

**Laboratory Control Sample/Matrix Spike Analysis**

| Analyte | Sample ID | Sample Conc. µg/L | Spike Conc. µg/L | Spike Amount µg/L | Percent Recovery |
|---|---|---|---|---|---|
| Hg | 23-S1285 | < 0.007 | 5.05 | 5.00 | 101. |
| Hg | 23-S1294 | 0.067 | 5.11 | 5.00 | 101. |
| Hg | 23-S1354 | 0.038 | 5.13 | 5.00 | 102. |

LCS Limit: 80% - 120% Recovery Spike Limit: 75% - 125% Recovery

# *QA/QC Report*

Client Name: Montrose Air Quality Services
Project Number: H007
Analytical Technique: Cold Vapor Atomic Absorption
Instrument: Nippon 3320A CVAA
Sample Description: EPA Method 29
Report Number: 23-298

**Blank Data**

| Analyte | Sample ID | Measured Conc. µg/L | DL Conc. µg/L |
|---|---|---|---|
| Hg | ICB | < DL | 0.007 |
| Hg | CCB | < DL | 0.007 |
| Hg | CCB | < DL | 0.007 |

ICB: Initial Calibration Blank CCB: Continuing Calibration Blank
*: Sample Media Blank (SM_Blk) concentration in µg/filter
Method Blank is in control if Method Blank results are <10% of sample results

**Calibration QC**

| Analyte | Sample ID | Standard Conc. µg/L | Measured Conc. µg/L | Percent Recovery |
|---|---|---|---|---|
| Hg | ICV | 5.00 | 5.05 | 101.0 |
| Hg | LL-LCS | 0.020 | 0.020 | 100.0 |
| Hg | CCV | 5.00 | 5.26 | 105.1 |
| Hg | CCV | 5.00 | 5.11 | 102.1 |

ICV: Initial Calibration Verification CCV: Continuing Calibration Verification
Calibration Verification Limits: 90% - 110% Recovery
Low Level-LCS Limits: 50% - 150% Recovery
LL-LCS results are insignificant if sample results are >10x LL-LCS concentration

**Duplicate Data**

All samples analyzed in duplicate. The reported concentrations are the average of the two measurements.

**Laboratory Control Sample/Matrix Spike Analysis**

| Analyte | Sample ID | Sample Conc. µg/L | Spike Conc. µg/L | Spike Amount µg/L | Percent Recovery |
|---|---|---|---|---|---|
| Hg | 23-S1287 | < 0.007 | 5.07 | 5.00 | 101. |
| Hg | 23-S1296 | 0.339 | 5.41 | 5.00 | 101. |

LCS Limit: 80% - 120% Recovery Spike Limit: 75% - 125% Recovery

# *QA/QC Report*

Client Name: Montrose Air Quality Services
Project Number: H007
Analytical Technique: Cold Vapor Atomic Absorption
Instrument: Nippon 3320A CVAA
Sample Description: EPA Method 29
Report Number: 23-298

**Blank Data**

| Analyte | Sample ID | Measured Conc. µg/L | DL Conc. µg/L |
|---|---|---|---|
| Hg | ICB | < DL | 0.007 |
| Hg | CCB | < DL | 0.007 |
| Hg | CCB | < DL | 0.007 |
| Hg | CCB | < DL | 0.007 |

ICB: Initial Calibration Blank CCB: Continuing Calibration Blank
*: Sample Media Blank (SM_Blk) concentration in µg/filter
Method Blank is in control if Method Blank results are <10% of sample results

**Calibration QC**

| Analyte | Sample ID | Standard Conc. µg/L | Measured Conc. µg/L | Percent Recovery |
|---|---|---|---|---|
| Hg | ICV | 5.00 | 5.24 | 104.8 |
| Hg | LL-LCS | 0.020 | 0.028 | 140.0 |
| Hg | CCV | 5.00 | 5.12 | 102.4 |
| Hg | CCV | 5.00 | 5.38 | 107.5 |
| Hg | CCV | 5.00 | 5.25 | 104.9 |

ICV: Initial Calibration Verification CCV: Continuing Calibration Verification
Calibration Verification Limits: 90% - 110% Recovery
Low Level-LCS Limits: 50% - 150% Recovery
LL-LCS results are insignificant if sample results are >10x LL-LCS concentration

**Duplicate Data**

All samples analyzed in duplicate. The reported concentrations are the average of the two measurements.

## CVAA RAW DATA

Available upon request

# *CHESTER LABNET*

## SOURCE SAMPLE RECEIPT CHECKLIST

| | | | |
|---|---|---|---|
| Client | Montrose Portland | Date | 6/1/23 |
| # Runs | 3 + Blanks | Report # | 23-298 |

| | | |
|---|---|---|
| Package intact? | hand delivered | |
| Chain-of-Custody form inspected | ✓ | |
| CoC present with samples? | ✓ | |
| CoC indicates analytical methodology to be used? (eg M29, etc.) | ODEQ 5, EPA 29 | !! |
| Has CoC been signed by client? | ✓ | |
| Custody release date and time noted on CoC? | ✓ | |
| All sample containers inspected | ✓ | |
| Does number of samples match number on CoC form? | ✓ | !! |
| Do all sample ID numbers match those on the CoC form? | ✓ | !! |
| Did client mark sample volumes prior to shipment? | ✓ | |
| Sample temperature recorded? | ambient | |
| Are the sample containers intact? | ✓ | !! |
| If present, Audit Sample intact? | n/a | !! |
| **Are signs of leakage present?** | No | * |
| Chain-of-Custody form signed and dated by CLN | ✓ | |
| Corrective actions | | |
| Client contacted due to mismatching sample ID numbers | | |
| Client contacted due to broken sample container(s) | | |
| Client contacted due to leaking sample container(s) | | |
| Client contacted for verification of methodology? | | |
| Corrective actions documented? | | |
| Corrective actions accomplished? | | |

*Items marked !! shall be addressed **prior to any analytical work being started**.*
*Items marked * shall be **noted in case narrative** upon reporting of results to client.*

Signed _____

Notes _____

MONTROSE
AIR QUALITY SERVICES

# CHAIN OF CUSTODY

23-298

**Portland Location**
13585 NE Whitaker Way
Portland, OR 97230
Phone (503) 255-5050 | Fax (503) 255-0505

**Lab info:**

Chester LabNet

| **Client / Project:** | **Project / Sample Location:** | **Test / Analytical Method:** |
|---|---|---|
| MONTROSE | ACI | ODEQ 5 |
| **Project No.:** | **Purchase Order No:** | **Special Analysis / Detection Limit / Reporting Instructions:** |
| PROJ-021372 | | |
| **Send Analytical Report To:** | **Sampler or PM Signature:** | FPM / CPM |
| Portland QA/QC: PortlandQA-QC@montrose-env.com<br>sewolfendale@montrose-env.com | | |

| Run / Sample No. | Date | Time | Containers | Sample Fraction | Reagent | Lab / Sample ID No. |
|---|---|---|---|---|---|---|
| 1-PM | 5/23/23 | 0950-1250 | 1 | Filter | -- | 22-4427 |
| " | " | " | 1 | F½ Acetone | acetone | 23-S1272 |
| " | " | " | 1 | Impinger H2O | water | 23-S1273 |
| " | " | " | 1 | B½ Acetone | acetone | 23-S1274 |
| 2-PM | 5/23/23 | 1410-1710 | 4 | Same as Run 1 | " 22-4423 | 23-S1275 - 1277 |
| 3-PM | 5/24/23 | 0925-1225 | 4 | Same as Run 1 | 22-4426 | 23-S1278 - 1280 |
| | | | | | | |
| RB-PM-A | 5/23/23 | 1300 | 1 | Reagent blank | acetone | 23-S1281 |
| RB-PM-B | 5/23/23 | 1300 | 1 | Reagent blank | water | 23-S1282 |
| FB-PM | 5/23/23 | 1300 | 1 | Filter blank | -- | 22-4239 |
| | | | | | | |
| | | | | | | |
| | | | | | | |
| | | | | | | |
| | | | | | | |
| | | | | | | |
| **Total Containers** | | | 15 | | | |

| Relinquished by | Date | Time | Received by | Date | Time | Temp. |
|---|---|---|---|---|---|---|
| | 5/31/23 | 1600. | | 5/31/23 | 1600 | |
| Relinquished by | Date | Time | Received by | Date | Time | Temp. |
| | 6/1/23 | 1305 | | 6/1/23 | 1305 | amb. |
| Relinquished by | Date | Time | Received by | Date | Time | Temp. |
| | | | | | | |

Key: FB = Field Blank, RB = Reagent Blank

ODEQ ACI - ODEQ 5 CoC.xlsm

MONTROSE
AIR QUALITY SERVICES

# CHAIN OF CUSTODY

23-298

**Seattle Location**
4150 B Place NW, Suite 106
Auburn, WA 98001
Phone (253) 480-3800 | Fax (253) 480-3801

**Lab info:**
Chester LabNet

| **Client / Project:** | **Project / Sample Location:** | **Test / Analytical Method:** |
|---|---|---|
| MONTROSE | ACI | EPA 29 (multiple metals) |
| **Project No.:** | **Purchase Order No:** | **Special Analysis / Reporting Instructions:** |
| PROJ-021372 | | Multiple Metals: Antimony (Sb), Arsenic (As), Barium (Ba), Beryllium (Be), Cadmium (Cd), Chromium (Cr), Cobalt (Co), Copper (Cu), Lead (Pb), Manganese (Mn), Mercury (Hg), Nickel (Ni), Phosphorus (P), Selenium (Se), Silver (Ag), Thallium (Tl), Zinc (Zn) |
| **Send Analytical Report To:** | **Sampler or PM Signature:** | |
| Portland QA/QC: PortlandQA-QC@montrose-env.com<br>sewolfendale@montrose-env.com | | |

| Run / Sample No. | Date | Time | Containers | Sample Fraction | Reagent | Lab / Sample ID No. |
|---|---|---|---|---|---|---|
| 1-MM | 5/24/23 | 1418-1718 | 1 | Container 1 - filter | -- | 23-S 1283 |
| " | " | " | 1 | Container 3 - front-half rinse | 0.1N HNO3 | |
| " | " | " | 1 | Container 4 - [KO], Impingers 1 & 2 contents, rinses | 5% HNO3 / 10% H2O2 | 23-S 1284 |
| " | " | " | 1 | Container 5a - Impinger 3 contents and rinse | 0.1N HNO3 | 23-S 1285 |
| " | " | " | 1 | Container 5b - Impingers 4 & 5 contents and rinses | 10% H2SO4 / 4% KMnO4 | 23-S 1286 |
| " | " | " | 1 | Container 5c - Impingers 4 & 5 acid rinse | 8N HCl | 23-S 1287 |
| 2-MM | 5/25/23 | 0852-1152 | 6 | Same as Run 1 | " | 23-S 1288 - 1292 |
| 3-MM | 5/25/23 | 1305-1605 | 6 | Same as Run 1 | " | 23-S 1293 - 1297 |
| | | | | | | |
| | | | | | | |
| RB-MM-8a/b | 5/25/23 | 1200 | 2 | Containers 8a/b - 0.1N HNO3, water reagent blanks | 0.1N HNO3, water | 23-S 1298 23-S 1300 |
| RB-MM-9 | 5/25/23 | 1200 | 1 | Container 9 - HNO3 / H2O2 reagent blank | 5% HNO3 / 10% H2O2 | 23-S 1299 |
| RB-MM-10 | 5/25/23 | 1200 | 1 | Container 10 - H2SO4 / KMnO4 reagent blank | 10% H2SO4 / 4% KMnO4 | 23-S 1301 |
| RB-MM-11 | 5/25/23 | 1200 | 1 | Container 11 - 8N HCl reagent blank | 8N HCl | 23-S 1302 |
| RB-MM-12 | 5/25/23 | 1200 | 1 | Container 12 - filters (3) reagent blank | -- | 23-S 1298 |
| | | | | | | |
| **Total Containers** | | | 24 | | | |

| Relinquished by | Date | Time | Received by | Date | Time | Temp. |
|---|---|---|---|---|---|---|
| | 5/31/23 | 1600. | | 5/31/23 | 1600 | |
| Relinquished by | Date | Time | Received by | Date | Time | Temp. |
| | 6/1/23 | 1305 | | 6/1/23 | 1305 | amb. |
| Relinquished by | Date | Time | Received by | Date | Time | Temp. |
| | | | | | | |

Key: [KO] = Knockout impinger, "[ ]" denotes an option in the method, FB = Field Blank, RB = Reagent Blank

M29 CoC.xlsm

# Appendix C.2
# PCDD/PCDF Analyses

# Montrose Air Quality Services, LLC

13585 NE Whitaker Way Suite 1000
Portland, OR 92614

## ACI Stack

Client Project: ODEQ ACI Project
Samples Received: 6/1/2023

Analytical Report
0423-775

EPA Method 23
PCDD / PCDF

Report Issue Date: 7/06/2023

I certify that to the best of my knowledge all analytical data presented in this report have been checked for completeness, accuracy, errors and legibility in addition to having been conducted in accordance with approved protocol, and that all deviations and analytical problems are summarized in the appropriate narrative(s). This analytical report was prepared in Portable Document Format (.PDF) and contains ___21____ pages. This report shall not be reproduced except in full without approval of the laboratory. This will provide assurance that parts of the report are not taken out of context.

Signature:



Laura Boivin, QA Associate II

Amendments:

Enthalpy Analytical, LLC – Ultratrace
Mark Hager, Project Manager
O: 910-876-6894 / F: 910-212-6886
mark.hager@enthalpy.com / www.enthalpy.com
2714 Exchange Drive, Wilmington, NC 28405

# Summary of Results

## Enthalpy Analytical

Job No.: 0423-775-4 EPA Method 23

Montrose Air Quality Services, LLC - Portland ODEQ ACI Project Mobile Air Curtain Incinerator

### Summary

| | Compound | CAS | 1-ACI-M23<br>pg | 2-ACI-M23<br>pg | 3-ACI-M23<br>pg | FB-ACI-M23<br>pg | RB<br>pg |
|---|---|---|---|---|---|---|---|
| TCDD | 2378-TCDD (S) | 1746-01-6 | 107 | 52.9 | 166 | ND U | ND U |
| PeCDD | 12378-PeCDD (S) | 40321-76-4 | 62.1 EMPC | 53.3 | 114 | ND U | ND U |
| HxCDD | 123478-HxCDD (S) | 39227-28-6 | 44.6 | 20.6 JB | 53.3 | 3.28 LB-EMPC | 3.10 LB |
| | 123678-HxCDD (S) | 57653-85-7 | 66.2 | 21.5 J | 66.6 | ND U | ND U |
| | 123789-HxCDD (S) | 19408-74-3 | 64.8 | 21.1 J | 63.9 | ND U | 1.92 L-EMPC |
| HpCDD | 1234678-HpCDD (S) | 35822-46-9 | 1050 | 132 | 1070 | ND U | 2.38 L-EMPC |
| OCDD | OCDD (S) | 3268-87-9 | 5070 | 559 | 4970 | 8.54 JB-EMPC | 9.44 JB |
| TCDF | 2378-TCDF (S) | 51207-31-9 | 1060 | 653 | 1690 | ND U | ND U |
| PeCDF | 12378-PeCDF (S) | 57117-41-6 | 223 | 243 | 472 | ND U | ND U |
| | 23478-PeCDF (S) | 57117-31-4 | 267 | 384 | 695 | ND U | ND U |
| HxCDF | 123478-HxCDF (S) | 70648-26-9 | 45.0 | 99.4 | 127 | ND U | ND U |
| | 123678-HxCDF (S) | 57117-44-9 | 49.2 | 115 | 137 | ND U | ND U |
| | 234678-HxCDF (S) | 60851-34-5 | 45.6 | 127 | 135 | ND U | ND U |
| | 123789-HxCDF (S) | 72918-21-9 | 17.4 J | 41.0 | 40.2 | ND U | ND U |
| HpCDF | 1234678-HpCDF (S) | 67562-39-4 | 60.1 | 94.9 | 129 | ND U | ND U |
| | 1234789-HpCDF (S) | 55673-89-7 | 27.0 | 21.3 J | 34.6 | ND U | ND U |
| OCDF | OCDF (S) | 39001-02-0 | 149 | 38.8 J | 150 | ND U | ND U |

| | | | | | | |
|---|---|---|---|---|---|---|
| TCDD group total | 41903-57-5 | 826 | 607 | 1550 | ND | ND |
| PeCDD group total | 36088-22-9 | 458 | 372 | 734 | ND | ND |
| HxCDD group total | 34465-46-8 | 739 | 235 | 781 | 3.28 | 5.02 |
| HpCDD group total | 37871-00-4 | 1950 | 239 | 1960 | 3.14 | 6.18 |
| OCDD group total | | 5070 | 559 | 4970 | 8.54 | 9.44 |
| TCDF group total | 55722-27-5 | 15200 | 11500 | 28300 | ND | ND |
| PeCDF group total | 30402-15-4 | 2550 | 3550 | 6190 | ND | ND |
| HxCDF group total | 55684-94-1 | 401 | 938 | 1110 | ND | ND |
| HpCDF group total | 38998-75-3 | 178 | 179 | 274 | ND | ND |
| OCDF group total | | 149 | 38.8 | 150 | ND | ND |

| | | | | | | |
|---|---|---|---|---|---|---|
| TEQ | ITEQ (ND=0; EMPC=0) | 407 | 397 | 843 | 0 | 0.319 |
| | ITEQ (ND=1/2EDL;EMPC=1/2EDL) | 408 | 397 | 843 | 1.55 | 2.08 |
| | ITEQ (ND=EDL EMPC=EDL) | 409 | 397 | 843 | 3.11 | 3.85 |
| | ITEQ (ND=0; EMPC=EMPC) | 438 | 397 | 843 | 0.337 | 0.535 |
| | ITEQ (ND=1/2EDL; EMPC=EMPC) | 438 | 397 | 843 | 1.80 | 2.16 |
| | ITEQ (ND=EDL; EMPC=EMPC) | 438 | 397 | 843 | 3.26 | 3.78 |
| | WTEQ (ND=0; EMPC=0) | 346 | 341 | 748 | 0 | 0.313 |
| | WTEQ (ND=1/2EDL;EMPC=1/2EDL) | 348 | 341 | 748 | 1.75 | 2.30 |
| | WTEQ (ND=EDL EMPC=EDL) | 350 | 341 | 748 | 3.49 | 4.29 |
| | WTEQ (ND=0; EMPC=EMPC) | 408 | 341 | 748 | 0.331 | 0.529 |
| | WTEQ (ND=1/2EDL; EMPC=EMPC) | 408 | 341 | 748 | 1.99 | 2.38 |
| | WTEQ (ND=EDL; EMPC=EMPC) | 408 | 341 | 748 | 3.65 | 4.23 |



247 of 489

W006AS-021372-RT-2857

# Detailed Results

## Enthalpy Analytical

Job No.: 0423-775-4 EPA Method 23

Montrose Air Quality Services, LLC - Portland ODEQ ACI Project Mobile Air Curtain Incinerator

| | | | | | |
|---|---|---|---|---|---|
| Enthalpy ID | 0423-775-001-1 | Prep Batch | EU15419 | Sample Vol (mL) | N/A |
| Sample Name | 1-ACI-M23 | Prep Date | 2023-06-09 16:15 | Extract Vol (mL) | 0.02 |
| Matrix | Air | Analysis Date | 2023-06-29 16:25 | Split Factor | 2 |
| Sampling Date | 2023-05-23 09:50 | Analyst | avheadrick | Method Code | WM-001 |
| Received Date | 2023-06-05 | Instrument | Gandalf | Sample Type | Sample |

| | Compound | CAS | Formatted Result pg | LOQ pg | EDL pg | Recovery Limits | Recovery | Flags |
|---|---|---|---|---|---|---|---|---|
| TCDD | 2378-TCDD (S) | 1746-01-6 | 107 | 5.00 | 1.36 | | | |
| PeCDD | 12378-PeCDD (S) | 40321-76-4 | 62.1 | 25.0 | 4.45 | | | EMPC |
| HxCDD | 123478-HxCDD (S) | 39227-28-6 | 44.6 | 25.0 | 2.96 | | | |
| | 123678-HxCDD (S) | 57653-85-7 | 66.2 | 25.0 | 3.16 | | | |
| | 123789-HxCDD (S) | 19408-74-3 | 64.8 | 25.0 | 3.53 | | | |
| HpCDD | 1234678-HpCDD (S) | 35822-46-9 | 1050 | 25.0 | 6.11 | | | |
| OCDD | OCDD (S) | 3268-87-9 | 5070 | 50.0 | 7.37 | | | |
| TCDF | 2378-TCDF (S) | 51207-31-9 | 1060 | 5.00 | 2.76 | | | |
| PeCDF | 12378-PeCDF (S) | 57117-41-6 | 223 | 25.0 | 3.91 | | | |
| | 23478-PeCDF (S) | 57117-31-4 | 267 | 25.0 | 4.85 | | | |
| HxCDF | 123478-HxCDF (S) | 70648-26-9 | 45.0 | 25.0 | 2.00 | | | |
| | 123678-HxCDF (S) | 57117-44-9 | 49.2 | 25.0 | 1.93 | | | |
| | 234678-HxCDF (S) | 60851-34-5 | 45.6 | 25.0 | 2.30 | | | |
| | 123789-HxCDF (S) | 72918-21-9 | 17.4 | 25.0 | 1.79 | | | J |
| HpCDF | 1234678-HpCDF (S) | 67562-39-4 | 60.1 | 25.0 | 2.19 | | | |
| | 1234789-HpCDF (S) | 55673-89-7 | 27.0 | 25.0 | 2.27 | | | |
| OCDF | OCDF (S) | 39001-02-0 | 149 | 50.0 | 2.47 | | | |
| ES | 13C-2378-TCDD (ES) | 76523-40-5 | | | 6.50 | 40-135% | 71.6% | |
| | 13C-12378-PeCDD (ES) | 109719-79-1 | | | 8.84 | 40-135% | 66.5% | |
| | 13C-123478-HxCDD (ES) | 109719-80-4 | | | 10.5 | 40-135% | 64.3% | |
| | 13C-123678-HxCDD (ES) | 109719-81-5 | | | 9.83 | 40-135% | 60.4% | |
| | 13C-123789-HxCDD (ES) | 109719-82-6 | | | 9.83 | 40-135% | 58.0% | |
| | 13C-1234678-HpCDD (ES) | 109719-83-7 | | | 7.18 | 40-135% | 62.6% | |
| | 13C-OCDD (ES) | 114423-97-1 | | | 7.81 | 40-135% | 58.0% | |
| | 13C-2378-TCDF (ES) | 89059-46-1 | | | 5.37 | 40-135% | 69.3% | |
| | 13C-12378-PeCDF (ES) | 109719-77-9 | | | 6.37 | 40-135% | 67.3% | |
| | 13C-23478-PeCDF (ES) | 116843-02-8 | | | 6.58 | 40-135% | 65.3% | |
| | 13C-123478-HxCDF (ES) | 114423-98-2 | | | 11.2 | 40-135% | 60.7% | |
| | 13C-123678-HxCDF (ES) | 116843-03-9 | | | 10.2 | 40-135% | 57.3% | |
| | 13C-234678-HxCDF (ES) | 116843-05-1 | | | 11.1 | 40-135% | 57.3% | |
| | 13C-123789-HxCDF (ES) | 116843-04-0 | | | 12.3 | 40-135% | 64.6% | |
| | 13C-1234678-HpCDF (ES) | 109719-84-8 | | | 14.0 | 40-135% | 57.6% | |
| | 13C-1234789-HpCDF (ES) | 109719-94-0 | | | 16.1 | 40-135% | 62.2% | |
| | 13C-OCDF (ES) | 109719-78-0 | | | 7.20 | 40-135% | 56.2% | |
| SS | 37Cl-2378-TCDD (SS) | | | | 0.938 | 70-130% | 91.4% | |
| | 13C-12347-PeCDD (SS) | | | | 13.8 | 70-130% | 100.5% | |
| | 13C-12346-PeCDF (SS) | | | | 9.06 | 70-130% | 92.9% | |
| | 13C-123469-HxCDF (SS) | | | | 17.0 | 70-130% | 102.6% | |
| | 13C-1234689-HpCDF (SS) | | | | 24.5 | 70-130% | 104.6% | |
| AS | 13C-1368-TCDD (AS) | | | | 6.17 | 20-150% | 74.8% | |
| | 13C-1368-TCDF (AS) | | | | 4.71 | 20-150% | 74.7% | |

| | | | | | | | | |
|---|---|---|---|---|---|---|---|---|
| TCDD group total: | | 41903-57-5 | 826 | | 1.36 | | | |
| PeCDD group total: | | 36088-22-9 | 458 | | 4.45 | | | |
| HxCDD group total: | | 34465-46-8 | 739 | | 3.21 | | | |
| HpCDD group total: | | 37871-00-4 | 1950 | | 6.11 | | | |
| OCDD group total: | | | 5070 | | 7.37 | | | |
| TCDF group total: | | 55722-27-5 | 15200 | | 2.76 | | | |
| PeCDF group total: | | 30402-15-4 | 2550 | | 4.38 | | | |
| HxCDF group total: | | 55684-94-1 | 401 | | 2.01 | | | |
| HpCDF group total: | | 38998-75-3 | 178 | | 2.23 | | | |
| OCDF group total: | | | 149 | | 2.47 | | | |

| | | | | | | | | |
|---|---|---|---|---|---|---|---|---|
| TEQ | ITEQ (ND=0; EMPC=0) | | 407 | | | | | |
| | ITEQ (ND=1/2EDL;EMPC=1/2EDL) | | 408 | | | | | |
| | ITEQ (ND=EDL EMPC=EDL) | | 409 | | | | | |
| | ITEQ (ND=0; EMPC=EMPC) | | 438 | | | | | |
| | ITEQ (ND=1/2EDL; EMPC=EMPC) | | 438 | | | | | |
| | ITEQ (ND=EDL; EMPC=EMPC) | | 438 | | | | | |
| | WTEQ (ND=0; EMPC=0) | | 346 | | | | | |
| | WTEQ (ND=1/2EDL;EMPC=1/2EDL) | | 348 | | | | | |
| | WTEQ (ND=EDL EMPC=EDL) | | 350 | | | | | |
| | WTEQ (ND=0; EMPC=EMPC) | | 408 | | | | | |
| | WTEQ (ND=1/2EDL; EMPC=EMPC) | | 408 | | | | | |
| | WTEQ (ND=EDL; EMPC=EMPC) | | 408 | | | | | |

## Enthalpy Analytical

Job No.: 0423-775-4 EPA Method 23

Montrose Air Quality Services, LLC - Portland ODEQ ACI Project Mobile Air Curtain Incinerator

| | | | | | |
|---|---|---|---|---|---|
| Enthalpy ID | 0423-775-002-1 | Prep Batch | EU15419 | Sample Vol (mL) | N/A |
| Sample Name | 2-ACI-M23 | Prep Date | 2023-06-09 16:15 | Extract Vol (mL) | 0.02 |
| Matrix | Air | Analysis Date | 2023-06-29 17:16 | Split Factor | 2 |
| Sampling Date | 2023-05-23 14:10 | Analyst | avheadrick | Method Code | WM-001 |
| Received Date | 2023-06-05 | Instrument | Gandalf | Sample Type | Sample |

| | Compound | CAS | Formatted Result pg | LOQ pg | EDL pg | Recovery Limits | Recovery | Flags |
|---|---|---|---|---|---|---|---|---|
| TCDD | 2378-TCDD (S) | 1746-01-6 | 52.9 | 5.00 | 1.07 | | | |
| PeCDD | 12378-PeCDD (S) | 40321-76-4 | 53.3 | 25.0 | 1.79 | | | |
| HxCDD | 123478-HxCDD (S) | 39227-28-6 | 20.6 | 25.0 | 2.37 | | | JB |
| | 123678-HxCDD (S) | 57653-85-7 | 21.5 | 25.0 | 2.29 | | | J |
| | 123789-HxCDD (S) | 19408-74-3 | 21.1 | 25.0 | 2.32 | | | J |
| HpCDD | 1234678-HpCDD (S) | 35822-46-9 | 132 | 25.0 | 2.69 | | | |
| OCDD | OCDD (S) | 3268-87-9 | 559 | 50.0 | 3.72 | | | |
| TCDF | 2378-TCDF (S) | 51207-31-9 | 653 | 5.00 | 2.82 | | | |
| PeCDF | 12378-PeCDF (S) | 57117-41-6 | 243 | 25.0 | 2.66 | | | |
| | 23478-PeCDF (S) | 57117-31-4 | 384 | 25.0 | 2.86 | | | |
| HxCDF | 123478-HxCDF (S) | 70648-26-9 | 99.4 | 25.0 | 1.66 | | | |
| | 123678-HxCDF (S) | 57117-44-9 | 115 | 25.0 | 1.64 | | | |
| | 234678-HxCDF (S) | 60851-34-5 | 127 | 25.0 | 1.77 | | | |
| | 123789-HxCDF (S) | 72918-21-9 | 41.0 | 25.0 | 1.80 | | | |
| HpCDF | 1234678-HpCDF (S) | 67562-39-4 | 94.9 | 25.0 | 1.57 | | | |
| | 1234789-HpCDF (S) | 55673-89-7 | 21.3 | 25.0 | 1.77 | | | J |
| OCDF | OCDF (S) | 39001-02-0 | 38.8 | 50.0 | 2.07 | | | J |
| ES | 13C-2378-TCDD (ES) | 76523-40-5 | | | 5.41 | 40-135% | 83.1% | |
| | 13C-12378-PeCDD (ES) | 109719-79-1 | | | 8.23 | 40-135% | 78.5% | |
| | 13C-123478-HxCDD (ES) | 109719-80-4 | | | 7.78 | 40-135% | 78.3% | |
| | 13C-123678-HxCDD (ES) | 109719-81-5 | | | 7.26 | 40-135% | 78.9% | |
| | 13C-123789-HxCDD (ES) | 109719-82-6 | | | 7.26 | 40-135% | 79.9% | |
| | 13C-1234678-HpCDD (ES) | 109719-83-7 | | | 7.76 | 40-135% | 80.3% | |
| | 13C-OCDD (ES) | 114423-97-1 | | | 6.61 | 40-135% | 71.0% | |
| | 13C-2378-TCDF (ES) | 89059-46-1 | | | 5.97 | 40-135% | 83.2% | |
| | 13C-12378-PeCDF (ES) | 109719-77-9 | | | 7.60 | 40-135% | 81.4% | |
| | 13C-23478-PeCDF (ES) | 116843-02-8 | | | 7.85 | 40-135% | 82.3% | |
| | 13C-123478-HxCDF (ES) | 114423-98-2 | | | 14.4 | 40-135% | 83.4% | |
| | 13C-123678-HxCDF (ES) | 116843-03-9 | | | 13.1 | 40-135% | 78.0% | |
| | 13C-234678-HxCDF (ES) | 116843-05-1 | | | 14.2 | 40-135% | 75.8% | |
| | 13C-123789-HxCDF (ES) | 116843-04-0 | | | 15.8 | 40-135% | 82.1% | |
| | 13C-1234678-HpCDF (ES) | 109719-84-8 | | | 11.6 | 40-135% | 75.5% | |
| | 13C-1234789-HpCDF (ES) | 109719-94-0 | | | 13.3 | 40-135% | 79.9% | |
| | 13C-OCDF (ES) | 109719-78-0 | | | 6.92 | 40-135% | 68.9% | |
| SS | 37Cl-2378-TCDD (SS) | | | | 1.11 | 70-130% | 93.9% | |
| | 13C-12347-PeCDD (SS) | | | | 9.49 | 70-130% | 97.7% | |
| | 13C-12346-PeCDF (SS) | | | | 8.64 | 70-130% | 95.2% | |
| | 13C-123469-HxCDF (SS) | | | | 20.8 | 70-130% | 97.8% | |
| | 13C-1234689-HpCDF (SS) | | | | 18.8 | 70-130% | 100.2% | |
| AS | 13C-1368-TCDD (AS) | | | | 5.13 | 20-150% | 83.3% | |
| | 13C-1368-TCDF (AS) | | | | 5.24 | 20-150% | 83.4% | |

| | | | | | | | | |
|---|---|---|---|---|---|---|---|---|
| TCDD group total: | | 41903-57-5 | 607 | | 1.07 | | | |
| PeCDD group total: | | 36088-22-9 | 372 | | 1.79 | | | |
| HxCDD group total: | | 34465-46-8 | 235 | | 2.33 | | | |
| HpCDD group total: | | 37871-00-4 | 239 | | 2.69 | | | |
| OCDD group total: | | | 559 | | 3.72 | | | |
| TCDF group total: | | 55722-27-5 | 11500 | | 2.82 | | | |
| PeCDF group total: | | 30402-15-4 | 3550 | | 2.76 | | | |
| HxCDF group total: | | 55684-94-1 | 938 | | 1.72 | | | |
| HpCDF group total: | | 38998-75-3 | 179 | | 1.67 | | | |
| OCDF group total: | | | 38.8 | | 2.07 | | | |

| | | | | | | | | |
|---|---|---|---|---|---|---|---|---|
| TEQ | ITEQ (ND=0; EMPC=0) | | 397 | | | | | |
| | ITEQ (ND=1/2EDL;EMPC=1/2EDL) | | 397 | | | | | |
| | ITEQ (ND=EDL EMPC=EDL) | | 397 | | | | | |
| | ITEQ (ND=0; EMPC=EMPC) | | 397 | | | | | |
| | ITEQ (ND=1/2EDL; EMPC=EMPC) | | 397 | | | | | |
| | ITEQ (ND=EDL; EMPC=EMPC) | | 397 | | | | | |
| | WTEQ (ND=0; EMPC=0) | | 341 | | | | | |
| | WTEQ (ND=1/2EDL;EMPC=1/2EDL) | | 341 | | | | | |
| | WTEQ (ND=EDL EMPC=EDL) | | 341 | | | | | |
| | WTEQ (ND=0; EMPC=EMPC) | | 341 | | | | | |
| | WTEQ (ND=1/2EDL; EMPC=EMPC) | | 341 | | | | | |
| | WTEQ (ND=EDL; EMPC=EMPC) | | 341 | | | | | |

## Enthalpy Analytical

Job No.: 0423-775-4 EPA Method 23

Montrose Air Quality Services, LLC - Portland ODEQ ACI Project Mobile Air Curtain Incinerator

| | | | | | |
|---|---|---|---|---|---|
| Enthalpy ID | 0423-775-003-1 | Prep Batch | EU15419 | Sample Vol (mL) | N/A |
| Sample Name | 3-ACI-M23 | Prep Date | 2023-06-09 16:15 | Extract Vol (mL) | 0.02 |
| Matrix | Air | Analysis Date | 2023-06-29 18:07 | Split Factor | 2 |
| Sampling Date | 2023-05-24 09:25 | Analyst | avheadrick | Method Code | WM-001 |
| Received Date | 2023-06-05 | Instrument | Gandalf | Sample Type | Sample |

| | Compound | CAS | Formatted Result pg | LOQ pg | EDL pg | Recovery Limits | Recovery | Flags |
|---|---|---|---|---|---|---|---|---|
| TCDD | 2378-TCDD (S) | 1746-01-6 | 166 | 5.00 | 1.35 | | | |
| PeCDD | 12378-PeCDD (S) | 40321-76-4 | 114 | 25.0 | 2.46 | | | |
| HxCDD | 123478-HxCDD (S) | 39227-28-6 | 53.3 | 25.0 | 3.44 | | | |
| | 123678-HxCDD (S) | 57653-85-7 | 66.6 | 25.0 | 3.34 | | | |
| | 123789-HxCDD (S) | 19408-74-3 | 63.9 | 25.0 | 3.51 | | | |
| HpCDD | 1234678-HpCDD (S) | 35822-46-9 | 1070 | 25.0 | 3.69 | | | |
| OCDD | OCDD (S) | 3268-87-9 | 4970 | 50.0 | 5.17 | | | |
| TCDF | 2378-TCDF (S) | 51207-31-9 | 1690 | 5.00 | 3.00 | | | |
| PeCDF | 12378-PeCDF (S) | 57117-41-6 | 472 | 25.0 | 4.38 | | | |
| | 23478-PeCDF (S) | 57117-31-4 | 695 | 25.0 | 5.19 | | | |
| HxCDF | 123478-HxCDF (S) | 70648-26-9 | 127 | 25.0 | 2.46 | | | |
| | 123678-HxCDF (S) | 57117-44-9 | 137 | 25.0 | 2.40 | | | |
| | 234678-HxCDF (S) | 60851-34-5 | 135 | 25.0 | 3.23 | | | |
| | 123789-HxCDF (S) | 72918-21-9 | 40.2 | 25.0 | 2.40 | | | |
| HpCDF | 1234678-HpCDF (S) | 67562-39-4 | 129 | 25.0 | 2.13 | | | |
| | 1234789-HpCDF (S) | 55673-89-7 | 34.6 | 25.0 | 2.21 | | | |
| OCDF | OCDF (S) | 39001-02-0 | 150 | 50.0 | 2.40 | | | |
| ES | 13C-2378-TCDD (ES) | 76523-40-5 | | | 4.68 | 40-135% | 75.2% | |
| | 13C-12378-PeCDD (ES) | 109719-79-1 | | | 7.43 | 40-135% | 71.5% | |
| | 13C-123478-HxCDD (ES) | 109719-80-4 | | | 6.80 | 40-135% | 60.4% | |
| | 13C-123678-HxCDD (ES) | 109719-81-5 | | | 6.35 | 40-135% | 59.0% | |
| | 13C-123789-HxCDD (ES) | 109719-82-6 | | | 6.35 | 40-135% | 54.4% | |
| | 13C-1234678-HpCDD (ES) | 109719-83-7 | | | 6.71 | 40-135% | 62.3% | |
| | 13C-OCDD (ES) | 114423-97-1 | | | 8.33 | 40-135% | 59.9% | |
| | 13C-2378-TCDF (ES) | 89059-46-1 | | | 4.50 | 40-135% | 73.6% | |
| | 13C-12378-PeCDF (ES) | 109719-77-9 | | | 6.27 | 40-135% | 73.0% | |
| | 13C-23478-PeCDF (ES) | 116843-02-8 | | | 6.48 | 40-135% | 71.2% | |
| | 13C-123478-HxCDF (ES) | 114423-98-2 | | | 7.82 | 40-135% | 60.8% | |
| | 13C-123678-HxCDF (ES) | 116843-03-9 | | | 7.12 | 40-135% | 58.4% | |
| | 13C-234678-HxCDF (ES) | 116843-05-1 | | | 7.75 | 40-135% | 57.7% | |
| | 13C-123789-HxCDF (ES) | 116843-04-0 | | | 8.59 | 40-135% | 63.6% | |
| | 13C-1234678-HpCDF (ES) | 109719-84-8 | | | 10.7 | 40-135% | 58.4% | |
| | 13C-1234789-HpCDF (ES) | 109719-94-0 | | | 12.3 | 40-135% | 61.5% | |
| | 13C-OCDF (ES) | 109719-78-0 | | | 6.30 | 40-135% | 58.0% | |
| SS | 37Cl-2378-TCDD (SS) | | | | 1.32 | 70-130% | 100.3% | |
| | 13C-12347-PeCDD (SS) | | | | 10.0 | 70-130% | 105.4% | |
| | 13C-12346-PeCDF (SS) | | | | 8.00 | 70-130% | 96.3% | |
| | 13C-123469-HxCDF (SS) | | | | 10.0 | 70-130% | 106.2% | |
| | 13C-1234689-HpCDF (SS) | | | | 16.2 | 70-130% | 110.3% | |
| AS | 13C-1368-TCDD (AS) | | | | 4.44 | 20-150% | 79.9% | |
| | 13C-1368-TCDF (AS) | | | | 3.95 | 20-150% | 78.9% | |

| | | | | | | | | |
|---|---|---|---|---|---|---|---|---|
| TCDD group total: | | 41903-57-5 | 1550 | | 1.35 | | | |
| PeCDD group total: | | 36088-22-9 | 734 | | 2.46 | | | |
| HxCDD group total: | | 34465-46-8 | 781 | | 3.43 | | | |
| HpCDD group total: | | 37871-00-4 | 1960 | | 3.69 | | | |
| OCDD group total: | | | 4970 | | 5.17 | | | |
| TCDF group total: | | 55722-27-5 | 28300 | | 3.00 | | | |
| PeCDF group total: | | 30402-15-4 | 6190 | | 4.79 | | | |
| HxCDF group total: | | 55684-94-1 | 1110 | | 2.62 | | | |
| HpCDF group total: | | 38998-75-3 | 274 | | 2.17 | | | |
| OCDF group total: | | | 150 | | 2.40 | | | |

| | | | | | | | | |
|---|---|---|---|---|---|---|---|---|
| TEQ | ITEQ (ND=0; EMPC=0) | | 843 | | | | | |
| | ITEQ (ND=1/2EDL;EMPC=1/2EDL) | | 843 | | | | | |
| | ITEQ (ND=EDL EMPC=EDL) | | 843 | | | | | |
| | ITEQ (ND=0; EMPC=EMPC) | | 843 | | | | | |
| | ITEQ (ND=1/2EDL; EMPC=EMPC) | | 843 | | | | | |
| | ITEQ (ND=EDL; EMPC=EMPC) | | 843 | | | | | |
| | WTEQ (ND=0; EMPC=0) | | 748 | | | | | |
| | WTEQ (ND=1/2EDL;EMPC=1/2EDL) | | 748 | | | | | |
| | WTEQ (ND=EDL EMPC=EDL) | | 748 | | | | | |
| | WTEQ (ND=0; EMPC=EMPC) | | 748 | | | | | |
| | WTEQ (ND=1/2EDL; EMPC=EMPC) | | 748 | | | | | |
| | WTEQ (ND=EDL; EMPC=EMPC) | | 748 | | | | | |

## Enthalpy Analytical

Job No.: 0423-775-4 EPA Method 23

Montrose Air Quality Services, LLC - Portland ODEQ ACI Project Mobile Air Curtain Incinerator

| | | | | | |
|---|---|---|---|---|---|
| Enthalpy ID | 0423-775-004-1 | Prep Batch | EU15419 | Sample Vol (mL) | N/A |
| Sample Name | FB-ACI-M23 | Prep Date | 2023-06-09 16:15 | Extract Vol (mL) | 0.02 |
| Matrix | Air | Analysis Date | 2023-06-29 18:59 | Split Factor | 2 |
| Sampling Date | 2023-05-23 13:00 | Analyst | avheadrick | Method Code | WM-001 |
| Received Date | 2023-06-05 | Instrument | Gandalf | Sample Type | Sample |

| | Compound | CAS | Formatted Result pg | LOQ pg | EDL pg | Recovery Limits | Recovery | Flags |
|---|---|---|---|---|---|---|---|---|
| TCDD | 2378-TCDD (S) | 1746-01-6 | ND | 5.00 | 0.967 | | | U |
| PeCDD | 12378-PeCDD (S) | 40321-76-4 | ND | 25.0 | 1.15 | | | U |
| HxCDD | 123478-HxCDD (S) | 39227-28-6 | 3.28 | 25.0 | 1.75 | | | LB-EMPC |
| | 123678-HxCDD (S) | 57653-85-7 | ND | 25.0 | 1.92 | | | U |
| | 123789-HxCDD (S) | 19408-74-3 | ND | 25.0 | 1.79 | | | U |
| HpCDD | 1234678-HpCDD (S) | 35822-46-9 | ND | 25.0 | 1.46 | | | U |
| OCDD | OCDD (S) | 3268-87-9 | 8.54 | 50.0 | 3.48 | | | JB-EMPC |
| TCDF | 2378-TCDF (S) | 51207-31-9 | ND | 5.00 | 1.05 | | | U |
| PeCDF | 12378-PeCDF (S) | 57117-41-6 | ND | 25.0 | 0.770 | | | U |
| | 23478-PeCDF (S) | 57117-31-4 | ND | 25.0 | 0.844 | | | U |
| HxCDF | 123478-HxCDF (S) | 70648-26-9 | ND | 25.0 | 0.959 | | | U |
| | 123678-HxCDF (S) | 57117-44-9 | ND | 25.0 | 0.924 | | | U |
| | 234678-HxCDF (S) | 60851-34-5 | ND | 25.0 | 1.02 | | | U |
| | 123789-HxCDF (S) | 72918-21-9 | ND | 25.0 | 1.18 | | | U |
| HpCDF | 1234678-HpCDF (S) | 67562-39-4 | ND | 25.0 | 1.13 | | | U |
| | 1234789-HpCDF (S) | 55673-89-7 | ND | 25.0 | 1.31 | | | U |
| OCDF | OCDF (S) | 39001-02-0 | ND | 50.0 | 1.93 | | | U |
| ES | 13C-2378-TCDD (ES) | 76523-40-5 | | | 6.47 | 40-135% | 92.2% | |
| | 13C-12378-PeCDD (ES) | 109719-79-1 | | | 8.78 | 40-135% | 89.5% | |
| | 13C-123478-HxCDD (ES) | 109719-80-4 | | | 6.11 | 40-135% | 83.8% | |
| | 13C-123678-HxCDD (ES) | 109719-81-5 | | | 5.71 | 40-135% | 87.1% | |
| | 13C-123789-HxCDD (ES) | 109719-82-6 | | | 5.71 | 40-135% | 85.6% | |
| | 13C-1234678-HpCDD (ES) | 109719-83-7 | | | 7.47 | 40-135% | 91.6% | |
| | 13C-OCDD (ES) | 114423-97-1 | | | 7.59 | 40-135% | 79.7% | |
| | 13C-2378-TCDF (ES) | 89059-46-1 | | | 5.82 | 40-135% | 89.9% | |
| | 13C-12378-PeCDF (ES) | 109719-77-9 | | | 7.49 | 40-135% | 91.7% | |
| | 13C-23478-PeCDF (ES) | 116843-02-8 | | | 7.74 | 40-135% | 92.1% | |
| | 13C-123478-HxCDF (ES) | 114423-98-2 | | | 12.9 | 40-135% | 89.9% | |
| | 13C-123678-HxCDF (ES) | 116843-03-9 | | | 11.7 | 40-135% | 87.8% | |
| | 13C-234678-HxCDF (ES) | 116843-05-1 | | | 12.8 | 40-135% | 86.6% | |
| | 13C-123789-HxCDF (ES) | 116843-04-0 | | | 14.1 | 40-135% | 89.3% | |
| | 13C-1234678-HpCDF (ES) | 109719-84-8 | | | 11.5 | 40-135% | 86.1% | |
| | 13C-1234789-HpCDF (ES) | 109719-94-0 | | | 13.2 | 40-135% | 87.2% | |
| | 13C-OCDF (ES) | 109719-78-0 | | | 5.25 | 40-135% | 76.9% | |
| SS | 37Cl-2378-TCDD (SS) | | | | 1.21 | 70-130% | 92.8% | |
| | 13C-12347-PeCDD (SS) | | | | 11.0 | 70-130% | 99.5% | |
| | 13C-12346-PeCDF (SS) | | | | 8.16 | 70-130% | 95.0% | |
| | 13C-123469-HxCDF (SS) | | | | 17.8 | 70-130% | 94.7% | |
| | 13C-1234689-HpCDF (SS) | | | | 17.0 | 70-130% | 97.7% | |
| AS | 13C-1368-TCDD (AS) | | | | 6.15 | 20-150% | 89.6% | |
| | 13C-1368-TCDF (AS) | | | | 5.10 | 20-150% | 88.9% | |

| | | | | | | | | |
|---|---|---|---|---|---|---|---|---|
| TCDD group total: | | 41903-57-5 | ND | | 0.967 | | | |
| PeCDD group total: | | 36088-22-9 | ND | | 1.15 | | | |
| HxCDD group total: | | 34465-46-8 | 3.28 | | 1.82 | | | |
| HpCDD group total: | | 37871-00-4 | 3.14 | | 1.46 | | | |
| OCDD group total: | | | 8.54 | | 3.48 | | | |
| TCDF group total: | | 55722-27-5 | ND | | 1.05 | | | |
| PeCDF group total: | | 30402-15-4 | ND | | 0.807 | | | |
| HxCDF group total: | | 55684-94-1 | ND | | 1.02 | | | |
| HpCDF group total: | | 38998-75-3 | ND | | 1.22 | | | |
| OCDF group total: | | | ND | | 1.93 | | | |

| | | | | | | | |
|---|---|---|---|---|---|---|---|
| TEQ | ITEQ (ND=0; EMPC=0) | 0 | | | | | |
| | ITEQ (ND=1/2EDL;EMPC=1/2EDL) | 1.55 | | | | | |
| | ITEQ (ND=EDL EMPC=EDL) | 3.11 | | | | | |
| | ITEQ (ND=0; EMPC=EMPC) | 0.337 | | | | | |
| | ITEQ (ND=1/2EDL; EMPC=EMPC) | 1.80 | | | | | |
| | ITEQ (ND=EDL; EMPC=EMPC) | 3.26 | | | | | |
| | WTEQ (ND=0; EMPC=0) | 0 | | | | | |
| | WTEQ (ND=1/2EDL;EMPC=1/2EDL) | 1.75 | | | | | |
| | WTEQ (ND=EDL EMPC=EDL) | 3.49 | | | | | |
| | WTEQ (ND=0; EMPC=EMPC) | 0.331 | | | | | |
| | WTEQ (ND=1/2EDL; EMPC=EMPC) | 1.99 | | | | | |
| | WTEQ (ND=EDL; EMPC=EMPC) | 3.65 | | | | | |

## Enthalpy Analytical

Job No.: 0423-775-4 EPA Method 23

Montrose Air Quality Services, LLC - Portland ODEQ ACI Project Mobile Air Curtain Incinerator

| | | | | | |
|---|---|---|---|---|---|
| Enthalpy ID | 0423-775-005-1 | Prep Batch | EU15419 | Sample Vol (mL) | N/A |
| Sample Name | RB | Prep Date | 2023-06-09 16:15 | Extract Vol (mL) | 0.02 |
| Matrix | Air | Analysis Date | 2023-06-29 19:50 | Split Factor | 2 |
| Sampling Date | 2023-05-23 13:00 | Analyst | avheadrick | Method Code | WM-001 |
| Received Date | 2023-06-05 | Instrument | Gandalf | Sample Type | Sample |

| | Compound | CAS | Formatted Result pg | LOQ pg | EDL pg | Recovery Limits | Recovery | Flags |
|---|---|---|---|---|---|---|---|---|
| TCDD | 2378-TCDD (S) | 1746-01-6 | ND | 5.00 | 0.996 | | | U |
| PeCDD | 12378-PeCDD (S) | 40321-76-4 | ND | 25.0 | 1.44 | | | U |
| HxCDD | 123478-HxCDD (S) | 39227-28-6 | 3.10 | 25.0 | 2.49 | | | LB |
| | 123678-HxCDD (S) | 57653-85-7 | ND | 25.0 | 2.51 | | | U |
| | 123789-HxCDD (S) | 19408-74-3 | 1.92 | 25.0 | 2.53 | | | L-EMPC |
| HpCDD | 1234678-HpCDD (S) | 35822-46-9 | 2.38 | 25.0 | 2.66 | | | L-EMPC |
| OCDD | OCDD (S) | 3268-87-9 | 9.44 | 50.0 | 3.53 | | | JB |
| TCDF | 2378-TCDF (S) | 51207-31-9 | ND | 5.00 | 0.982 | | | U |
| PeCDF | 12378-PeCDF (S) | 57117-41-6 | ND | 25.0 | 1.17 | | | U |
| | 23478-PeCDF (S) | 57117-31-4 | ND | 25.0 | 1.23 | | | U |
| HxCDF | 123478-HxCDF (S) | 70648-26-9 | ND | 25.0 | 1.11 | | | U |
| | 123678-HxCDF (S) | 57117-44-9 | ND | 25.0 | 1.07 | | | U |
| | 234678-HxCDF (S) | 60851-34-5 | ND | 25.0 | 1.14 | | | U |
| | 123789-HxCDF (S) | 72918-21-9 | ND | 25.0 | 1.37 | | | U |
| HpCDF | 1234678-HpCDF (S) | 67562-39-4 | ND | 25.0 | 1.63 | | | U |
| | 1234789-HpCDF (S) | 55673-89-7 | ND | 25.0 | 1.97 | | | U |
| OCDF | OCDF (S) | 39001-02-0 | ND | 50.0 | 2.10 | | | U |
| ES | 13C-2378-TCDD (ES) | 76523-40-5 | | | 6.78 | 40-135% | 94.8% | |
| | 13C-12378-PeCDD (ES) | 109719-79-1 | | | 9.85 | 40-135% | 91.3% | |
| | 13C-123478-HxCDD (ES) | 109719-80-4 | | | 12.3 | 40-135% | 94.9% | |
| | 13C-123678-HxCDD (ES) | 109719-81-5 | | | 11.5 | 40-135% | 94.0% | |
| | 13C-123789-HxCDD (ES) | 109719-82-6 | | | 11.5 | 40-135% | 91.3% | |
| | 13C-1234678-HpCDD (ES) | 109719-83-7 | | | 11.9 | 40-135% | 100.0% | |
| | 13C-OCDD (ES) | 114423-97-1 | | | 9.88 | 40-135% | 87.2% | |
| | 13C-2378-TCDF (ES) | 89059-46-1 | | | 6.49 | 40-135% | 95.3% | |
| | 13C-12378-PeCDF (ES) | 109719-77-9 | | | 13.6 | 40-135% | 88.4% | |
| | 13C-23478-PeCDF (ES) | 116843-02-8 | | | 14.1 | 40-135% | 90.6% | |
| | 13C-123478-HxCDF (ES) | 114423-98-2 | | | 19.7 | 40-135% | 95.7% | |
| | 13C-123678-HxCDF (ES) | 116843-03-9 | | | 17.9 | 40-135% | 91.9% | |
| | 13C-234678-HxCDF (ES) | 116843-05-1 | | | 19.5 | 40-135% | 92.2% | |
| | 13C-123789-HxCDF (ES) | 116843-04-0 | | | 21.6 | 40-135% | 94.7% | |
| | 13C-1234678-HpCDF (ES) | 109719-84-8 | | | 17.1 | 40-135% | 94.1% | |
| | 13C-1234789-HpCDF (ES) | 109719-94-0 | | | 19.7 | 40-135% | 94.4% | |
| | 13C-OCDF (ES) | 109719-78-0 | | | 7.25 | 40-135% | 78.6% | |
| SS | 37Cl-2378-TCDD (SS) | | | | 1.56 | 70-130% | 96.0% | |
| | 13C-12347-PeCDD (SS) | | | | 11.7 | 70-130% | 101.0% | |
| | 13C-12346-PeCDF (SS) | | | | 16.8 | 70-130% | 102.3% | |
| | 13C-123469-HxCDF (SS) | | | | 24.0 | 70-130% | 96.0% | |
| | 13C-1234689-HpCDF (SS) | | | | 20.7 | 70-130% | 103.0% | |
| AS | 13C-1368-TCDD (AS) | | | | 6.44 | 20-150% | 104.2% | |
| | 13C-1368-TCDF (AS) | | | | 5.69 | 20-150% | 99.5% | |

| | | | | | | | | |
|---|---|---|---|---|---|---|---|---|
| TCDD group total: | | 41903-57-5 | ND | | 0.996 | | | |
| PeCDD group total: | | 36088-22-9 | ND | | 1.44 | | | |
| HxCDD group total: | | 34465-46-8 | 5.02 | | 2.51 | | | |
| HpCDD group total: | | 37871-00-4 | 6.18 | | 2.66 | | | |
| OCDD group total: | | | 9.44 | | 3.53 | | | |
| TCDF group total: | | 55722-27-5 | ND | | 0.982 | | | |
| PeCDF group total: | | 30402-15-4 | ND | | 1.20 | | | |
| HxCDF group total: | | 55684-94-1 | ND | | 1.17 | | | |
| HpCDF group total: | | 38998-75-3 | ND | | 1.80 | | | |
| OCDF group total: | | | ND | | 2.10 | | | |

| | | | | | | | | |
|---|---|---|---|---|---|---|---|---|
| TEQ | ITEQ (ND=0; EMPC=0) | | 0.319 | | | | | |
| | ITEQ (ND=1/2EDL;EMPC=1/2EDL) | | 2.08 | | | | | |
| | ITEQ (ND=EDL EMPC=EDL) | | 3.85 | | | | | |
| | ITEQ (ND=0; EMPC=EMPC) | | 0.535 | | | | | |
| | ITEQ (ND=1/2EDL; EMPC=EMPC) | | 2.16 | | | | | |
| | ITEQ (ND=EDL; EMPC=EMPC) | | 3.78 | | | | | |
| | WTEQ (ND=0; EMPC=0) | | 0.313 | | | | | |
| | WTEQ (ND=1/2EDL;EMPC=1/2EDL) | | 2.30 | | | | | |
| | WTEQ (ND=EDL EMPC=EDL) | | 4.29 | | | | | |
| | WTEQ (ND=0; EMPC=EMPC) | | 0.529 | | | | | |
| | WTEQ (ND=1/2EDL; EMPC=EMPC) | | 2.38 | | | | | |
| | WTEQ (ND=EDL; EMPC=EMPC) | | 4.23 | | | | | |

# QC Data

## Enthalpy Analytical

Job No.: 0423-775-4 EPA Method 23

Montrose Air Quality Services, LLC - Portland ODEQ ACI Project Mobile Air Curtain Incinerator

| | | | | | |
|---|---|---|---|---|---|
| Enthalpy ID | MB-15419-DF | Prep Batch | EU15419 | Sample Vol (mL) | N/A |
| Sample Name | MB-15419-DF | Prep Date | 2023-06-09 16:15 | Extract Vol (mL) | 0.02 |
| Matrix | Air | Analysis Date | 2023-06-29 15:33 | Split Factor | 2 |
| Sampling Date | | Analyst | avheadrick | Method Code | WM-001 |
| Received Date | | Instrument | Gandalf | Sample Type | Blank |

| | Compound | CAS | Formatted Result pg | LOQ pg | EDL pg | Recovery Limits | Recovery | Flags |
|---|---|---|---|---|---|---|---|---|
| TCDD | 2378-TCDD (S) | 1746-01-6 | ND | 5.00 | 1.21 | | | U |
| PeCDD | 12378-PeCDD (S) | 40321-76-4 | ND | 25.0 | 1.78 | | | U |
| HxCDD | 123478-HxCDD (S) | 39227-28-6 | 2.24 | 25.0 | 2.20 | | | L-EMPC |
| | 123678-HxCDD (S) | 57653-85-7 | ND | 25.0 | 2.35 | | | U |
| | 123789-HxCDD (S) | 19408-74-3 | ND | 25.0 | 2.37 | | | U |
| HpCDD | 1234678-HpCDD (S) | 35822-46-9 | ND | 25.0 | 2.22 | | | U |
| OCDD | OCDD (S) | 3268-87-9 | 9.62 | 50.0 | 3.87 | | | J-EMPC |
| TCDF | 2378-TCDF (S) | 51207-31-9 | ND | 5.00 | 0.803 | | | U |
| PeCDF | 12378-PeCDF (S) | 57117-41-6 | ND | 25.0 | 1.08 | | | U |
| | 23478-PeCDF (S) | 57117-31-4 | ND | 25.0 | 1.12 | | | U |
| HxCDF | 123478-HxCDF (S) | 70648-26-9 | ND | 25.0 | 1.15 | | | U |
| | 123678-HxCDF (S) | 57117-44-9 | ND | 25.0 | 0.996 | | | U |
| | 234678-HxCDF (S) | 60851-34-5 | ND | 25.0 | 1.17 | | | U |
| | 123789-HxCDF (S) | 72918-21-9 | ND | 25.0 | 1.40 | | | U |
| HpCDF | 1234678-HpCDF (S) | 67562-39-4 | ND | 25.0 | 1.43 | | | U |
| | 1234789-HpCDF (S) | 55673-89-7 | ND | 25.0 | 1.76 | | | U |
| OCDF | OCDF (S) | 39001-02-0 | ND | 50.0 | 2.00 | | | U |
| ES | 13C-2378-TCDD (ES) | 76523-40-5 | | | 5.81 | 40-135% | 70.8% | |
| | 13C-12378-PeCDD (ES) | 109719-79-1 | | | 10.6 | 40-135% | 68.5% | |
| | 13C-123478-HxCDD (ES) | 109719-80-4 | | | 6.66 | 40-135% | 73.0% | |
| | 13C-123678-HxCDD (ES) | 109719-81-5 | | | 6.21 | 40-135% | 71.6% | |
| | 13C-123789-HxCDD (ES) | 109719-82-6 | | | 6.21 | 40-135% | 70.3% | |
| | 13C-1234678-HpCDD (ES) | 109719-83-7 | | | 7.49 | 40-135% | 73.5% | |
| | 13C-OCDD (ES) | 114423-97-1 | | | 8.65 | 40-135% | 70.7% | |
| | 13C-2378-TCDF (ES) | 89059-46-1 | | | 5.96 | 40-135% | 69.4% | |
| | 13C-12378-PeCDF (ES) | 109719-77-9 | | | 9.91 | 40-135% | 67.8% | |
| | 13C-23478-PeCDF (ES) | 116843-02-8 | | | 10.2 | 40-135% | 70.2% | |
| | 13C-123478-HxCDF (ES) | 114423-98-2 | | | 14.2 | 40-135% | 71.7% | |
| | 13C-123678-HxCDF (ES) | 116843-03-9 | | | 12.9 | 40-135% | 71.7% | |
| | 13C-234678-HxCDF (ES) | 116843-05-1 | | | 14.1 | 40-135% | 69.9% | |
| | 13C-123789-HxCDF (ES) | 116843-04-0 | | | 15.6 | 40-135% | 73.3% | |
| | 13C-1234678-HpCDF (ES) | 109719-84-8 | | | 12.6 | 40-135% | 69.5% | |
| | 13C-1234789-HpCDF (ES) | 109719-94-0 | | | 14.5 | 40-135% | 75.5% | |
| | 13C-OCDF (ES) | 109719-78-0 | | | 4.81 | 40-135% | 69.8% | |
| SS | 37Cl-2378-TCDD (SS) | | | | 1.16 | 70-130% | 97.3% | |
| | 13C-12347-PeCDD (SS) | | | | 18.2 | 70-130% | 100.5% | |
| | 13C-12346-PeCDF (SS) | | | | 14.3 | 70-130% | 102.5% | |
| | 13C-123469-HxCDF (SS) | | | | 22.0 | 70-130% | 99.4% | |
| | 13C-1234689-HpCDF (SS) | | | | 21.7 | 70-130% | 111.0% | |
| AS | 13C-1368-TCDD (AS) | | | | 5.52 | 20-150% | 79.4% | |
| | 13C-1368-TCDF (AS) | | | | 5.23 | 20-150% | 79.6% | |

| | | | | | | | | |
|---|---|---|---|---|---|---|---|---|
| TCDD group total: | | 41903-57-5 | ND | | 1.21 | | | |
| PeCDD group total: | | 36088-22-9 | 6.78 | | 1.78 | | | |
| HxCDD group total: | | 34465-46-8 | 2.24 | | 2.31 | | | |
| HpCDD group total: | | 37871-00-4 | 4.06 | | 2.22 | | | |
| OCDD group total: | | | 9.62 | | 3.87 | | | |
| TCDF group total: | | 55722-27-5 | ND | | 0.803 | | | |
| PeCDF group total: | | 30402-15-4 | 1.24 | | 1.10 | | | |
| HxCDF group total: | | 55684-94-1 | ND | | 1.18 | | | |
| HpCDF group total: | | 38998-75-3 | ND | | 1.60 | | | |
| OCDF group total: | | | ND | | 2.00 | | | |

| | | | | | | | |
|---|---|---|---|---|---|---|---|
| TEQ | ITEQ (ND=0; EMPC=0) | 0 | | | | | |
| | ITEQ (ND=1/2EDL;EMPC=1/2EDL) | 2.01 | | | | | |
| | ITEQ (ND=EDL EMPC=EDL) | 4.01 | | | | | |
| | ITEQ (ND=0; EMPC=EMPC) | 0.234 | | | | | |
| | ITEQ (ND=1/2EDL; EMPC=EMPC) | 2.13 | | | | | |
| | ITEQ (ND=EDL; EMPC=EMPC) | 4.02 | | | | | |
| | WTEQ (ND=0; EMPC=0) | 0 | | | | | |
| | WTEQ (ND=1/2EDL;EMPC=1/2EDL) | 2.32 | | | | | |
| | WTEQ (ND=EDL EMPC=EDL) | 4.65 | | | | | |
| | WTEQ (ND=0; EMPC=EMPC) | 0.227 | | | | | |
| | WTEQ (ND=1/2EDL; EMPC=EMPC) | 2.44 | | | | | |
| | WTEQ (ND=EDL; EMPC=EMPC) | 4.66 | | | | | |

## Enthalpy Analytical

Job No.: 0423-775-4 EPA Method 23

Montrose Air Quality Services, LLC - Portland ODEQ ACI Project Mobile Air Curtain Incinerator

| | | | | | |
|---|---|---|---|---|---|
| Enthalpy ID | BCS-15419-DF | Prep Batch | EU15419 | Sample Vol (mL) | N/A |
| Sample Name | BCS-15419-DF | Prep Date | 2023-06-09 16:15 | Extract Vol (mL) | 0.04 |
| Matrix | Air | Analysis Date | 2023-06-29 13:51 | Split Factor | N/A |
| Sampling Date | | Analyst | avheadrick | Method Code | WM-001 |
| Received Date | | Instrument | Gandalf | Sample Type | Control |

| | Compound | CAS | Formatted Result pg | LOQ pg | EDL pg | Recovery Limits | Recovery | Flags |
|---|---|---|---|---|---|---|---|---|
| TCDD | 2378-TCDD (S) | 1746-01-6 | 352 | 10.0 | 1.82 | 70-130% | 88.1% | |
| PeCDD | 12378-PeCDD (S) | 40321-76-4 | 1980 | 50.0 | 5.01 | 70-130% | 99.2% | |
| HxCDD | 123478-HxCDD (S) | 39227-28-6 | 2050 | 50.0 | 8.02 | 70-130% | 102.5% | |
| | 123678-HxCDD (S) | 57653-85-7 | 2090 | 50.0 | 8.34 | 70-130% | 104.4% | |
| | 123789-HxCDD (S) | 19408-74-3 | 2030 | 50.0 | 8.35 | 70-130% | 101.7% | |
| HpCDD | 1234678-HpCDD (S) | 35822-46-9 | 2010 | 50.0 | 6.22 | 70-130% | 100.3% | |
| OCDD | OCDD (S) | 3268-87-9 | 4110 | 100 | 8.38 | 70-130% | 102.8% | |
| TCDF | 2378-TCDF (S) | 51207-31-9 | 387 | 10.0 | 2.16 | 70-130% | 96.8% | |
| PeCDF | 12378-PeCDF (S) | 57117-41-6 | 2030 | 50.0 | 5.55 | 70-130% | 101.4% | |
| | 23478-PeCDF (S) | 57117-31-4 | 2090 | 50.0 | 6.00 | 70-130% | 104.6% | |
| HxCDF | 123478-HxCDF (S) | 70648-26-9 | 2010 | 50.0 | 6.74 | 70-130% | 100.5% | |
| | 123678-HxCDF (S) | 57117-44-9 | 2090 | 50.0 | 6.58 | 70-130% | 104.7% | |
| | 234678-HxCDF (S) | 60851-34-5 | 2010 | 50.0 | 6.81 | 70-130% | 100.5% | |
| | 123789-HxCDF (S) | 72918-21-9 | 2040 | 50.0 | 8.24 | 70-130% | 101.9% | |
| HpCDF | 1234678-HpCDF (S) | 67562-39-4 | 2100 | 50.0 | 6.98 | 70-130% | 104.8% | |
| | 1234789-HpCDF (S) | 55673-89-7 | 2090 | 50.0 | 7.63 | 70-130% | 104.7% | |
| OCDF | OCDF (S) | 39001-02-0 | 4320 | 100 | 7.78 | 70-130% | 108.0% | |
| ES | 13C-2378-TCDD (ES) | 76523-40-5 | | | 6.96 | 40-135% | 84.4% | |
| | 13C-12378-PeCDD (ES) | 109719-79-1 | | | 9.54 | 40-135% | 82.8% | |
| | 13C-123478-HxCDD (ES) | 109719-80-4 | | | 12.9 | 40-135% | 83.4% | |
| | 13C-123678-HxCDD (ES) | 109719-81-5 | | | 12.0 | 40-135% | 86.9% | |
| | 13C-123789-HxCDD (ES) | 109719-82-6 | | | 12.1 | 40-135% | 86.1% | |
| | 13C-1234678-HpCDD (ES) | 109719-83-7 | | | 11.2 | 40-135% | 89.2% | |
| | 13C-OCDD (ES) | 114423-97-1 | | | 10.9 | 40-135% | 87.1% | |
| | 13C-2378-TCDF (ES) | 89059-46-1 | | | 6.95 | 40-135% | 85.4% | |
| | 13C-12378-PeCDF (ES) | 109719-77-9 | | | 9.77 | 40-135% | 83.2% | |
| | 13C-23478-PeCDF (ES) | 116843-02-8 | | | 10.1 | 40-135% | 83.6% | |
| | 13C-123478-HxCDF (ES) | 114423-98-2 | | | 15.7 | 40-135% | 88.9% | |
| | 13C-123678-HxCDF (ES) | 116843-03-9 | | | 14.3 | 40-135% | 88.7% | |
| | 13C-234678-HxCDF (ES) | 116843-05-1 | | | 15.6 | 40-135% | 88.2% | |
| | 13C-123789-HxCDF (ES) | 116843-04-0 | | | 17.3 | 40-135% | 89.9% | |
| | 13C-1234678-HpCDF (ES) | 109719-84-8 | | | 16.4 | 40-135% | 85.9% | |
| | 13C-1234789-HpCDF (ES) | 109719-94-0 | | | 18.9 | 40-135% | 87.0% | |
| | 13C-OCDF (ES) | 109719-78-0 | | | 6.17 | 40-135% | 83.6% | |
| SS | 37Cl-2378-TCDD (SS) | | | | 1.52 | 70-130% | 96.1% | |
| | 13C-12347-PeCDD (SS) | | | | 13.9 | 70-130% | 98.9% | |
| | 13C-12346-PeCDF (SS) | | | | 11.5 | 70-130% | 98.6% | |
| | 13C-123469-HxCDF (SS) | | | | 20.9 | 70-130% | 96.5% | |
| | 13C-1234689-HpCDF (SS) | | | | 24.0 | 70-130% | 105.4% | |
| AS | 13C-1368-TCDD (AS) | | | | 6.60 | 20-150% | 90.4% | |
| | 13C-1368-TCDF (AS) | | | | 6.10 | 20-150% | 89.4% | |

| | | | | | | | | |
|---|---|---|---|---|---|---|---|---|
| TCDD group total: | | 41903-57-5 | 1520 | | 1.82 | | | |
| PeCDD group total: | | 36088-22-9 | 7100 | | 5.01 | | | |
| HxCDD group total: | | 34465-46-8 | 9260 | | 8.23 | | | |
| HpCDD group total: | | 37871-00-4 | 4720 | | 6.22 | | | |
| OCDD group total: | | | 4110 | | 8.38 | | | |
| TCDF group total: | | 55722-27-5 | 1860 | | 2.16 | | | |
| PeCDF group total: | | 30402-15-4 | 6610 | | 5.78 | | | |
| HxCDF group total: | | 55684-94-1 | 12700 | | 7.09 | | | |
| HpCDF group total: | | 38998-75-3 | 4190 | | 7.30 | | | |
| OCDF group total: | | | 4320 | | 7.78 | | | |

| | | | | | | | |
|---|---|---|---|---|---|---|---|
| TEQ | ITEQ (ND=0; EMPC=0) | 4030 | | | | | |
| | ITEQ (ND=1/2EDL;EMPC=1/2EDL) | 4030 | | | | | |
| | ITEQ (ND=EDL EMPC=EDL) | 4030 | | | | | |
| | ITEQ (ND=0; EMPC=EMPC) | 4030 | | | | | |
| | ITEQ (ND=1/2EDL; EMPC=EMPC) | 4030 | | | | | |
| | ITEQ (ND=EDL; EMPC=EMPC) | 4030 | | | | | |
| | WTEQ (ND=0; EMPC=0) | 4560 | | | | | |
| | WTEQ (ND=1/2EDL;EMPC=1/2EDL) | 4560 | | | | | |
| | WTEQ (ND=EDL EMPC=EDL) | 4560 | | | | | |
| | WTEQ (ND=0; EMPC=EMPC) | 4560 | | | | | |
| | WTEQ (ND=1/2EDL; EMPC=EMPC) | 4560 | | | | | |
| | WTEQ (ND=EDL; EMPC=EMPC) | 4560 | | | | | |

# Narrative Summary

# Enthalpy Analytical Narrative Summary

| | |
|---|---|
| Company | Montrose Air Quality Services, LLC - Portland |
| Job No. | 0423-775-4 EPA Method 23 |
| Client ID. | ODEQ ACI Project Site: ACI Stack |

**1. Custody**

Braidy May received the samples on June 01, 2023 in a cooler at 5.6 °C. Two boxes inside the cooler were 4.9 °C and 2.6 °C. The samples were relinquished by Montrose Air Quality Services, LLC - Portland. The samples were received in good condition.

Prior to, during, and after analysis, the samples were kept under lock with access only to authorized personnel by Enthalpy Analytical, LLC.

**Table 1 - Sample Inventory**

| EU Lab Sample ID | Client Sample ID | Matrix |
|---|---|---|
| 0423-775-001-1 | 1-ACI-M23 | Air |
| 0423-775-002-1 | 2-ACI-M23 | Air |
| 0423-775-003-1 | 3-ACI-M23 | Air |
| 0423-775-004-1 | FB-ACI-M23 | Air |
| 0423-775-005-1 | RB | Air |

**2. Methods and Analytes**

A list of analytes of interest and corresponding methods of analysis is shown in Table 3. Abbreviations are defined in the listed Appendices.

**Table 3 - Methods and Analytes**

| EU Method | Analytes |
|---|---|
| EU-045 | PCDD/PCDF |

**3. Analysis**

The samples were analyzed by EPA Method 23 for PCDD/PCDFs Agilent Technologies Model# 6890 High-Resolution GC/ Waters High-Resolution Mass-Spectrometer (HRGC/HRMS “Gandalf”).

Each sample train including the blank train, consisted of 1 XAD trap, 1 filter, and 1 Acetone/ Toluene combined rinse.

Prior to extraction, the laboratory spiked the samples with Extraction Standard (ES), then extracted by Soxhlet procedure. After solvent exchange, each extract was spiked with Alternate Standard (AS). The extracts were divided into two parts. One half of each extract was archived.

Cleanup procedures were performed on the remaining half of each extract. Each final sample extract was transferred to an autosampler vial and spiked with Injection Standard (JS), prior to analysis.

**4. Calibration**

The Initial Calibration (ICAL), Initial Calibration Verification (ICV), and continuing calibration (concal) met acceptance method criteria.

# Enthalpy Analytical Narrative Summary

| | |
|---|---|
| Company | Montrose Air Quality Services, LLC - Portland |
| Job No. | 0423-775-4 EPA Method 23 |
| Client ID. | ODEQ ACI Project Site: ACI Stack |

**5. QC Notes**

The QC sample analyses passed all method criteria.

Analytes were detected in the method blank (MB) below LOQ. Any analyte detected in the sample(s) with less than 10 times the amount detected in MB is notated with a B qualifier and reported with no adverse impact.

The HRMS system displayed mass resolving power of at least 10,000 during the analysis.

GC Resolution parameters were met for TCDD and TCDF.

The samples were extracted within the 30-day from collection holding time and analyzed within the 45-day from extraction to analysis holding time required by the method.

**6. Reporting Notes**

The TEQ was calculated and reported using I-TEF and WHO-2005 TEF, calculated by multiplying the concentration for each 2,3,7,8-substituted PCDD/F by its toxic equivalency factor (TEF). The Totals and Detection Limits have been included in the report. The TEQ is reported with and without EMPCs included. Additionally, the TEQ may be reported with non-detects treated as having a concentration of zero, a concentration of one-half the EDL, and/or a concentration equal to the EDL.

These analyses met the requirements of the TNI Standard. Any deviations from the requirements of the reference method or TNI Standard have been stated above.

The results presented in this report are representative of the samples as provided to the laboratory.

Enthalpy Analytical, LLC in Wilmington NC is accredited by the Louisiana Department of Environmental Quality to the 2009 TNI Standard under certificate number 05075.

# General Reporting Notes – Data Qualifiers

The following are general reporting notes that are applicable to all Enthalpy Analytical, LLC - Wilmington, NC data reports, unless specifically noted otherwise.

**General Data Qualifiers**

- B – The analyte was found in the method blank, at a concentration that was at least 10% of the amount in the sample.
- Cxx – Two or more congeners co-elute. In EDDs, C denotes the lowest IUPAC congener in a co-elution group and additional co-eluters for the group ('xx') are shown with the number of the lowest IUPAC co-eluter.
- E – The reported concentration exceeds the calibration range (upper point of the calibration curve). For HRMS data, this condition does not imply additional measurement uncertainty. For LC-MS/MS data, these values should be considered as having measurement uncertainty higher than values within the calibration range.
- EDL – Estimated Detection Level: The EDL is unique to isotope dilution methods and reflects the conditions of analysis at the time of analysis, including the equipment used. Where the MDL is a static value, the EDL is a dynamic value.
- EMPC – Estimated Maximum Possible Concentration: EMPC is specific to Dioxin/Furan tests to indicate the determined ion-abundance ratio was outside the allowed theoretical range (usually due to being near the detection limit, although it can very rarely be caused by a co-eluting interference). The EMPC concentration is adjusted to reflect the value at the theoretical ion-abundance ratio.
- IR – The ion ratio between the primary and secondary ions was observed to be outside the method criteria. The analyte concentration may be inaccurate due to interference.
- J – The analyte has a concentration below the minimum calibration level (LOQ value) but greater than the LOD. These values should be considered as having measurement uncertainty higher than values within the calibration range
- L - Indicates that an analyte has a concentration below the Minimum Detection Limit (MDL). The reported concentration is not recommended for regulatory use as the analyte signal may have a signal-to-noise ratio less than the criteria deemed necessary to be considered a detected analyte.
- LOD – Limit of Detection: For reports conforming to the DOD ELAP QSM, this is the QSM-defined LOD. For reports conforming to TNI requirements (but not DOD ELAP QSM requirements), this value is the minimum detection limit (MDL). The LOD is adjusted for sample weight or volume.
- LOQ – Limit of Quantitation: For reports conforming to the DOD ELAP QSM, this is the QSM-defined LOQ. For reports conforming to TNI requirements (but not DOD ELAP QSM requirements), this value is the reporting limit (RL). The LOQ is adjusted for sample weight or volume.

- <LOD() – Analyte was not found at a concentration high enough to be reported as detected. It is reported as less than the LOD, and the LOD is given in the parentheses.
- <LOQ() – Analyte was not found at a concentration high enough to be reported as above the QSM-defined LOQ or TNI defined Reporting Limit. It is reported as less than the LOQ, and the LOQ is given in the parentheses.
- ND – Indicates a non-detect.
- NR – Indicates a value that is not reportable due to issues observed in sample preparation or analysis.
- PR – The associated congener(s) is(are) poorly resolved.
- QI – Indicates the presence of a quantitative interference.
- RL – Reporting Limit. Lowest reportable value. The level is higher than the MDL.
- SI – Denotes "Single Ion Mode" and is utilized for PCBs where the secondary ion trace has a significantly elevated noise level due to background PFK. Responses for such peaks are calculated using an EMPC approach based solely on the primary ion area(s) and may be considered estimates.
- U – The analyte was not detected.
- V / Q – The labeled standard recovery is not within method control limits.
- X – Indicates the result is from re-injection/repeat/second-column analysis.

**Lab Identifiers/ Data Attributes**

- AR – Indicates use of the archived portion of the sample extract.
- CU – Indicates a sample that required additional clean-up prior to HRMS injection/processing.
- D – Dilution Data. Result was obtained from the analysis of a dilution. The number that follows the "D" indicates the dilution factor.
- DE – Indicates a dilution performed with the addition of ES (Extraction Standard) solution.
- DUP – Designation for a duplicate sample.
- MS – Designation for a matrix spike.
- MSD – Designation for a matrix spike duplicate.
- R – Indicates a re-extraction of the sample.
- RJ – Indicates a reinjection of the sample extract.

- S – Indicates a sample split. The number that follows the "S" indicates the split factor.
- SAT – Indicates an analyte saturated the detector.

# Sample Custody

MONTROSE
AIR QUALITY SERVICES

# CHAIN OF CUSTODY

Non DG Shipment 1 of 1

#PM confirmed 1 COC only. rest are copies OK 6/5/23


**Portland Location**
13585 NE Whitaker Way
Portland, OR 97230
Phone (503) 255-5050 | Fax (503) 255-0505


**Lab info:** 0423-775


Enthalpy Analytical
2714 Exchange Drive
Wilmington, NC 28405


| Client / Project: | Project / Sample Location: | Test / Analytical Method: |
|---|---|---|
| ODEQ ACI | ACI Stack | EPA Method 23 - latest revision |
| **Project No.:** PROJ-021372 | **Purchase Order No:** | **Special Analysis / Detection Limit / Reporting Instructions:** |
| **Send Analytical Report To:** Portland QA/QC: PortlandQA-QC@montrose-env.com sewolfendale@montrose-env.com | **Sampler or PM Signature:** | Dioxins/Furans |

| Run / Sample No. | Date | Time | Containers | Sample Fraction | Reagent | Lab / Sample ID No. |
|---|---|---|---|---|---|---|
| 1-ACI-M23 | 5/23/23 | 0950-1250 | 1 | Container 1 - Filter | - | |
| " | " | " | 1 | Cont. 2 - F1/2 and B1/2 rinses Acetone & Toluene | Acetone & Toluene | |
| | | | | | | |
| " | " | " | 1 | Adsorbent module | XAD-2 | |
| 2-ACI-M23 | 5/23/23 | 1410-1710 | 3 | Same as Run 1 | " | |
| 3-ACI-M23 | 5/24/23 | 0925-1225 | 3 | Same as Run 1 | " | Fedex, cooler, |
| FB-ACI-M23 | 5/23/23 | 1300 | 3 | Field Blank - same containers as Run 1 | " | 772308039052, |
| | | | | | | On Ice, T13, |
| RB-Acetone | 5/23/23 | 1300 | 1 | Acetone reagent blank | Acetone | no seal, |
| RB-DI | 5/23/23 | 1300 | 1 | DI H2O reagent blank | DI H2O | Good condition, |
| RB-Toluene | 5/23/23 | 1300 | 1 | Toluene reagent blank | Toluene | Bu 6-1-23 |
| RB-Filter | 5/23/23 | 1300 | 1 | Filter blank | Filter | Fedex, two boxes |
| RB-XAD | 5/23/23 | 1300 | 1 | XAD-2 sorbent trap blank | XAD-2 | boxA-4.9°C T13 |
| | | | | | | boxB-2.6°C T13 |
| | | | | | | boxA-772304745614 |
| | | | | | | boxB-772304746194 |
| **Total Containers** | | | 17 | | Good condition, On Ice, no seal, Bu 6-1-23 | |

| Relinquished by | Date | Time | Received by | Date | Time | Temp. |
|---|---|---|---|---|---|---|
| | 5/31/23 | 1500 | Brierley Mccy | 6-1-23 | 11:27 | 5.6 |
| Relinquished by | Date | Time | Received by | Date | Time | Temp. |
| Relinquished by | Date | Time | Received by | Date | Time | Temp. |



M23 CoC.

# This Is The Last Page Of This Report.

# Appendix C.3
# PAH Analyses

# Montrose Air Quality Services, LLC

13585 NE Whitaker Way Suite 1000
Portland, OR 92614

## ACI Stack

Client Project: ODEQ ACI Project
Samples Received: 6/1/2023

Analytical Report
0423-776

Modified CARB 429
PAH

Report Issue Date: 7/12/2023

I certify that to the best of my knowledge all analytical data presented in this report have been checked for completeness, accuracy, errors and legibility in addition to having been conducted in accordance with approved protocol, and that all deviations and analytical problems are summarized in the appropriate narrative(s). This analytical report was prepared in Portable Document Format (.PDF) and contains ___24____ pages. This report shall not be reproduced except in full without approval of the laboratory. This will provide assurance that parts of the report are not taken out of context.

Signature:



Laura Boivin, QA Associate II

Amendments:

Enthalpy Analytical, LLC – Ultratrace
Mark Hager, Project Manager
O: 910-876-6894 / F: 910-212-6886
mark.hager@enthalpy.com / www.enthalpy.com
2714 Exchange Drive, Wilmington, NC 28405

# Summary of Results

## Enthalpy Analytical

Job No.: 0423-776-3 Modified CARB 429

Montrose Air Quality Services, LLC - Portland Client Project: ODEQ ACI Site: ACI Stack

### Summary

| | Compound | CAS | 1-PAH-1500 ng | 2-PAH-1500 ng | 3-PAH-1500 ng | FB-PAH-1500 ng | RB-PAH-1500 ng |
|---|---|---|---|---|---|---|---|
| PAH | Naphthalene | 91-20-3 | 1040000 E | 648000 E | 540000 E | 1360 B | 1180 B |
| | 2-Methyl-naphthalene | 91-57-6 | 190000 E | 163000 E | 243000 E | 51.1 B | 38.4 B |
| | Acenaphthylene | 208-96-8 | 103000 E | 54800 E | 115000 E | ND U | ND U |
| | Acenaphthene | 83-32-9 | 11500 E | 10200 E | 18900 E | ND U | ND U |
| | Fluorene | 86-73-7 | 111000 E | 56400 E | 119000 E | 43.0 B | 15.4 B |
| | Phenanthrene | 85-01-8 | 344000 E | 234000 E | 262000 E | 497 | 221 |
| | Anthracene | 120-12-7 | 44300 E | 17400 E | 34400 E | 69.7 | 39.2 |
| | Fluoranthene | 206-44-0 | 273000 E | 110000 E | 266000 E | 224 | 89.8 B |
| | Pyrene | 129-00-0 | 71300 E | 49900 E | 72000 E | 338 B | 203 B |
| | Benzo(a)Anthracene | 53-70-3 | 15000 E | 8350 E | 33100 E | 98.5 | 68.2 |
| | Chrysene | 218-01-9 | 24700 E | 17200 E | 48700 E | 97.6 | 56.3 |
| | Benzo(b)Fluoranthene | 205-99-2 | 28500 E | 17400 E | 53900 E | 166 | 80.0 |
| | Benzo(k)Fluoranthene | 207-08-9 | 9130 E | 5830 E | 19400 E | 56.8 | 50.2 |
| | Benzo(e)Pyrene | 192-97-2 | 12800 E | 8290 E | 23800 E | 97.9 | 86.3 |
| | Benzo(a)Pyrene | 50-32-8 | 12800 E | 6020 E | 28900 E | 93.4 | ND U |
| | Perylene | 198-55-0 | 1080 | 395 | 2690 E | ND U | ND U |
| | Indeno(123-cd)Pyrene | 193-39-5 | 8720 E | 8260 E | 23200 E | 115 | 65.4 |
| | Benzo(ghi)Perylene | 191-24-2 | 13000 E | 9180 E | 29700 E | 239 | 197 |
| | Dibenzo(a,h)Anthracene | 53-70-3 | 873 | 775 | 2600 E | ND U | ND U |

# Detailed Results

## Enthalpy Analytical

Job No.: 0423-776-3 Modified CARB 429

Montrose Air Quality Services, LLC - Portland Client Project: ODEQ ACI Site: ACI Stack

| | | | | | |
|---|---|---|---|---|---|
| Enthalpy ID | 0423-776-001-1 | Prep Batch | EU15509 | Sample Vol (mL) | N/A |
| Sample Name | 1-PAH-1500 | Prep Date | 2023-06-30 15:10 | Extract Vol (mL) | 0.1 |
| Matrix | Air | Analysis Date | 2023-07-11 06:27 | Split Factor | 4 |
| Sampling Date | 2023-05-23 09:50 | Analyst | jemunoz | Method Code | WM-009 |
| Received Date | 2023-06-01 | Instrument | Gandalf | Sample Type | Sample |

| | Compound | CAS | Formatted Result ng | LOQ ng | EDL ng | Recovery Limits | Recovery | Flags |
|---|---|---|---|---|---|---|---|---|
| PAH | Naphthalene | 91-20-3 | 1040000 | 50.1 | 50.1 | | | E |
| | 2-Methyl-naphthalene | 91-57-6 | 190000 | 29.4 | 29.4 | | | E |
| | Acenaphthylene | 208-96-8 | 103000 | 134 | 134 | | | E |
| | Acenaphthene | 83-32-9 | 11500 | 66.3 | 66.3 | | | E |
| | Fluorene | 86-73-7 | 111000 | 45.3 | 45.3 | | | E |
| | Phenanthrene | 85-01-8 | 344000 | 130 | 130 | | | E |
| | Anthracene | 120-12-7 | 44300 | 275 | 275 | | | E |
| | Fluoranthene | 206-44-0 | 273000 | 23.7 | 23.7 | | | E |
| | Pyrene | 129-00-0 | 71300 | 7.18 | 7.18 | | | E |
| | Benzo(a)Anthracene | 53-70-3 | 15000 | 12.2 | 12.2 | | | E |
| | Chrysene | 218-01-9 | 24700 | 10.3 | 10.3 | | | E |
| | Benzo(b)Fluoranthene | 205-99-2 | 28500 | 13.7 | 13.7 | | | E |
| | Benzo(k)Fluoranthene | 207-08-9 | 9130 | 12.7 | 12.7 | | | E |
| | Benzo(e)Pyrene | 192-97-2 | 12800 | 14.7 | 14.7 | | | E |
| | Benzo(a)Pyrene | 50-32-8 | 12800 | 18.6 | 18.6 | | | E |
| | Perylene | 198-55-0 | 1080 | 21.9 | 21.9 | | | |
| | Indeno(123-cd)Pyrene | 193-39-5 | 8720 | 20.2 | 20.2 | | | E |
| | Benzo(ghi)Perylene | 191-24-2 | 13000 | 23.8 | 23.8 | | | E |
| | Dibenzo(a,h)Anthracene | 53-70-3 | 873 | 14.4 | 14.4 | | | |
| ES | 13C-Naphthalene (ES) | | | | 0.391 | 50-150% | 35.5% | Q |
| | 13C-Acenaphthylene (ES) | | | | 1.82 | 50-150% | 36.2% | Q |
| | 13C-Acenaphthene (ES) | | | | 1.63 | 50-150% | 35.4% | Q |
| | 13C-Fluorene (ES) | | | | 1.86 | 50-150% | 45.4% | Q |
| | 13C-Phenanthrene (ES) | | | | 1.13 | 50-150% | 132.0% | |
| | 13C-Anthracene (ES) | | | | 1.51 | 50-150% | 70.5% | |
| | 13C-Fluoranthene (ES) | | | | 9.75 | 50-150% | 59.1% | |
| | 13C-Pyrene (ES) | | | | 11.8 | 50-150% | 203.2% | Q |
| | 13C-Benzo(a)Anthracene (ES) | | | | 3.06 | 50-150% | 131.6% | |
| | 13C-Chrysene (ES) | | | | 2.85 | 50-150% | 132.6% | |
| | 13C-Benzo(b)Fluoranthene (ES) | | | | 2.11 | 50-150% | 71.0% | |
| | 13C-Benzo(k)Fluoranthene (ES) | | | | 1.86 | 50-150% | 80.2% | |
| | 13C-Benzo(e)Pyrene (ES) | | | | 3.17 | 50-150% | 72.5% | |
| | 13C-Benzo(a)Pyrene (ES) | | | | 3.74 | 50-150% | 65.0% | |
| | d12-Perylene (ES) | | | | 2.16 | 50-150% | 65.2% | |
| | 13C-Indeno(123-cd)Pyrene (ES) | | | | 7.76 | 50-150% | 82.9% | |
| | 13C-Benzo(ghi)Perylene (ES) | | | | 2.22 | 50-150% | 72.0% | |
| | 13C-2-Methylnaphthalene (ES) | | | | 0.574 | 50-150% | 36.1% | Q |
| | 13C-Dibenzo(a,h)Anthracene (ES | | | | 4.57 | 50-150% | 109.1% | |
| SS | d10-Fluorene (SS) | | | | 3.50 | 70-130% | 112.8% | |
| | d14-Terphenyl (SS) | | | | 0.466 | 70-130% | 70.3% | |
| AS | d10-Anthracene (AS) | | | | 1.69 | 50-150% | 139.8% | |

## Enthalpy Analytical

Job No.: 0423-776-3 Modified CARB 429

Montrose Air Quality Services, LLC - Portland Client Project: ODEQ ACI Site: ACI Stack

| | | | | | |
|---|---|---|---|---|---|
| Enthalpy ID | 0423-776-002-1 | Prep Batch | EU15509 | Sample Vol (mL) | N/A |
| Sample Name | 2-PAH-1500 | Prep Date | 2023-06-30 15:10 | Extract Vol (mL) | 0.1 |
| Matrix | Air | Analysis Date | 2023-07-11 07:09 | Split Factor | 4 |
| Sampling Date | 2023-05-23 14:10 | Analyst | jemunoz | Method Code | WM-009 |
| Received Date | 2023-06-01 | Instrument | Gandalf | Sample Type | Sample |

| | Compound | CAS | Formatted Result ng | LOQ ng | EDL ng | Recovery Limits | Recovery | Flags |
|---|---|---|---|---|---|---|---|---|
| PAH | Naphthalene | 91-20-3 | 648000 | 66.4 | 66.4 | | | E |
| | 2-Methyl-naphthalene | 91-57-6 | 163000 | 20.0 | 20.0 | | | E |
| | Acenaphthylene | 208-96-8 | 54800 | 188 | 188 | | | E |
| | Acenaphthene | 83-32-9 | 10200 | 83.6 | 83.6 | | | E |
| | Fluorene | 86-73-7 | 56400 | 79.3 | 79.3 | | | E |
| | Phenanthrene | 85-01-8 | 234000 | 13.6 | 13.6 | | | E |
| | Anthracene | 120-12-7 | 17400 | 22.8 | 22.8 | | | E |
| | Fluoranthene | 206-44-0 | 110000 | 29.6 | 29.6 | | | E |
| | Pyrene | 129-00-0 | 49900 | 16.6 | 16.6 | | | E |
| | Benzo(a)Anthracene | 53-70-3 | 8350 | 14.0 | 14.0 | | | E |
| | Chrysene | 218-01-9 | 17200 | 12.2 | 12.2 | | | E |
| | Benzo(b)Fluoranthene | 205-99-2 | 17400 | 17.7 | 17.7 | | | E |
| | Benzo(k)Fluoranthene | 207-08-9 | 5830 | 19.3 | 19.3 | | | E |
| | Benzo(e)Pyrene | 192-97-2 | 8290 | 18.1 | 18.1 | | | E |
| | Benzo(a)Pyrene | 50-32-8 | 6020 | 24.0 | 24.0 | | | E |
| | Perylene | 198-55-0 | 395 | 25.7 | 25.7 | | | |
| | Indeno(123-cd)Pyrene | 193-39-5 | 8260 | 28.8 | 28.8 | | | E |
| | Benzo(ghi)Perylene | 191-24-2 | 9180 | 26.4 | 26.4 | | | E |
| | Dibenzo(a,h)Anthracene | 53-70-3 | 775 | 22.1 | 22.1 | | | |
| ES | 13C-Naphthalene (ES) | | | | 0.437 | 50-150% | 61.9% | |
| | 13C-Acenaphthylene (ES) | | | | 2.00 | 50-150% | 83.1% | |
| | 13C-Acenaphthene (ES) | | | | 1.77 | 50-150% | 78.8% | |
| | 13C-Fluorene (ES) | | | | 2.17 | 50-150% | 83.1% | |
| | 13C-Phenanthrene (ES) | | | | 1.58 | 50-150% | 162.8% | Q |
| | 13C-Anthracene (ES) | | | | 2.12 | 50-150% | 110.3% | |
| | 13C-Fluoranthene (ES) | | | | 12.5 | 50-150% | 97.9% | |
| | 13C-Pyrene (ES) | | | | 6.75 | 50-150% | 177.3% | Q |
| | 13C-Benzo(a)Anthracene (ES) | | | | 4.98 | 50-150% | 126.5% | |
| | 13C-Chrysene (ES) | | | | 4.64 | 50-150% | 124.6% | |
| | 13C-Benzo(b)Fluoranthene (ES) | | | | 3.54 | 50-150% | 93.4% | |
| | 13C-Benzo(k)Fluoranthene (ES) | | | | 3.12 | 50-150% | 88.6% | |
| | 13C-Benzo(e)Pyrene (ES) | | | | 5.76 | 50-150% | 92.4% | |
| | 13C-Benzo(a)Pyrene (ES) | | | | 6.79 | 50-150% | 86.1% | |
| | d12-Perylene (ES) | | | | 3.39 | 50-150% | 78.8% | |
| | 13C-Indeno(123-cd)Pyrene (ES) | | | | 15.2 | 50-150% | 68.9% | |
| | 13C-Benzo(ghi)Perylene (ES) | | | | 3.57 | 50-150% | 89.7% | |
| | 13C-2-Methylnaphthalene (ES) | | | | 0.848 | 50-150% | 80.9% | |
| | 13C-Dibenzo(a,h)Anthracene (ES | | | | 7.75 | 50-150% | 102.5% | |
| SS | d10-Fluorene (SS) | | | | 2.29 | 70-130% | 112.1% | |
| | d14-Terphenyl (SS) | | | | 0.883 | 70-130% | 128.6% | |
| AS | d10-Anthracene (AS) | | | | 1.62 | 50-150% | 150.5% | Q |

## Enthalpy Analytical

Job No.: 0423-776-3 Modified CARB 429

Montrose Air Quality Services, LLC - Portland Client Project: ODEQ ACI Site: ACI Stack

| | | | | | |
|---|---|---|---|---|---|
| Enthalpy ID | 0423-776-003-1 | Prep Batch | EU15509 | Sample Vol (mL) | N/A |
| Sample Name | 3-PAH-1500 | Prep Date | 2023-06-30 15:10 | Extract Vol (mL) | 0.1 |
| Matrix | Air | Analysis Date | 2023-07-11 07:51 | Split Factor | 4 |
| Sampling Date | 2023-05-24 09:25 | Analyst | jemunoz | Method Code | WM-009 |
| Received Date | 2023-06-01 | Instrument | Gandalf | Sample Type | Sample |

| | Compound | CAS | Formatted Result ng | LOQ ng | EDL ng | Recovery Limits | Recovery | Flags |
|---|---|---|---|---|---|---|---|---|
| PAH | Naphthalene | 91-20-3 | 540000 | 27.8 | 27.8 | | | E |
| | 2-Methyl-naphthalene | 91-57-6 | 243000 | 12.2 | 12.2 | | | E |
| | Acenaphthylene | 208-96-8 | 115000 | 163 | 163 | | | E |
| | Acenaphthene | 83-32-9 | 18900 | 52.9 | 52.9 | | | E |
| | Fluorene | 86-73-7 | 119000 | 33.7 | 33.7 | | | E |
| | Phenanthrene | 85-01-8 | 262000 | 36.5 | 36.5 | | | E |
| | Anthracene | 120-12-7 | 34400 | 61.4 | 61.4 | | | E |
| | Fluoranthene | 206-44-0 | 266000 | 19.5 | 19.5 | | | E |
| | Pyrene | 129-00-0 | 72000 | 5.89 | 5.89 | | | E |
| | Benzo(a)Anthracene | 53-70-3 | 33100 | 21.6 | 21.6 | | | E |
| | Chrysene | 218-01-9 | 48700 | 15.7 | 15.7 | | | E |
| | Benzo(b)Fluoranthene | 205-99-2 | 53900 | 20.4 | 20.4 | | | E |
| | Benzo(k)Fluoranthene | 207-08-9 | 19400 | 18.0 | 18.0 | | | E |
| | Benzo(e)Pyrene | 192-97-2 | 23800 | 21.6 | 21.6 | | | E |
| | Benzo(a)Pyrene | 50-32-8 | 28900 | 27.2 | 27.2 | | | E |
| | Perylene | 198-55-0 | 2690 | 35.3 | 35.3 | | | E |
| | Indeno(123-cd)Pyrene | 193-39-5 | 23200 | 29.7 | 29.7 | | | E |
| | Benzo(ghi)Perylene | 191-24-2 | 29700 | 35.2 | 35.2 | | | E |
| | Dibenzo(a,h)Anthracene | 53-70-3 | 2600 | 37.0 | 37.0 | | | E |
| ES | 13C-Naphthalene (ES) | | | | 0.620 | 50-150% | 107.7% | |
| | 13C-Acenaphthylene (ES) | | | | 1.90 | 50-150% | 84.7% | |
| | 13C-Acenaphthene (ES) | | | | 1.57 | 50-150% | 70.0% | |
| | 13C-Fluorene (ES) | | | | 1.78 | 50-150% | 100.7% | |
| | 13C-Phenanthrene (ES) | | | | 1.06 | 50-150% | 196.3% | Q |
| | 13C-Anthracene (ES) | | | | 1.42 | 50-150% | 126.9% | |
| | 13C-Fluoranthene (ES) | | | | 10.4 | 50-150% | 126.5% | |
| | 13C-Pyrene (ES) | | | | 7.95 | 50-150% | 417.6% | Q |
| | 13C-Benzo(a)Anthracene (ES) | | | | 3.10 | 50-150% | 134.7% | |
| | 13C-Chrysene (ES) | | | | 2.89 | 50-150% | 142.4% | |
| | 13C-Benzo(b)Fluoranthene (ES) | | | | 3.25 | 50-150% | 118.7% | |
| | 13C-Benzo(k)Fluoranthene (ES) | | | | 2.87 | 50-150% | 113.8% | |
| | 13C-Benzo(e)Pyrene (ES) | | | | 6.03 | 50-150% | 122.0% | |
| | 13C-Benzo(a)Pyrene (ES) | | | | 7.11 | 50-150% | 99.5% | |
| | d12-Perylene (ES) | | | | 3.43 | 50-150% | 92.3% | |
| | 13C-Indeno(123-cd)Pyrene (ES) | | | | 16.2 | 50-150% | 121.0% | |
| | 13C-Benzo(ghi)Perylene (ES) | | | | 3.75 | 50-150% | 122.8% | |
| | 13C-2-Methylnaphthalene (ES) | | | | 1.00 | 50-150% | 103.1% | |
| | 13C-Dibenzo(a,h)Anthracene (ES | | | | 7.51 | 50-150% | 132.5% | |
| SS | d10-Fluorene (SS) | | | | 1.46 | 70-130% | 103.7% | |
| | d14-Terphenyl (SS) | | | | 0.324 | 70-130% | 60.7% | Q |
| AS | d10-Anthracene (AS) | | | | 1.75 | 50-150% | 128.3% | |

## Enthalpy Analytical

Job No.: 0423-776-3 Modified CARB 429

Montrose Air Quality Services, LLC - Portland Client Project: ODEQ ACI Site: ACI Stack

| | | | | | |
|---|---|---|---|---|---|
| Enthalpy ID | 0423-776-004-1 | Prep Batch | EU15509 | Sample Vol (mL) | N/A |
| Sample Name | FB-PAH-1500 | Prep Date | 2023-06-30 15:10 | Extract Vol (mL) | 0.1 |
| Matrix | Air | Analysis Date | 2023-07-11 08:33 | Split Factor | 4 |
| Sampling Date | 2023-05-23 13:00 | Analyst | jemunoz | Method Code | WM-009 |
| Received Date | 2023-06-01 | Instrument | Gandalf | Sample Type | Sample |

| | Compound | CAS | Formatted Result ng | LOQ ng | EDL ng | Recovery Limits | Recovery | Flags |
|---|---|---|---|---|---|---|---|---|
| PAH | Naphthalene | 91-20-3 | 1360 | 14.3 | 14.3 | | | B |
| | 2-Methyl-naphthalene | 91-57-6 | 51.1 | 10.8 | 10.8 | | | B |
| | Acenaphthylene | 208-96-8 | ND | 11.9 | 11.9 | | | U |
| | Acenaphthene | 83-32-9 | ND | 13.5 | 13.5 | | | U |
| | Fluorene | 86-73-7 | 43.0 | 13.0 | 13.0 | | | B |
| | Phenanthrene | 85-01-8 | 497 | 19.0 | 19.0 | | | |
| | Anthracene | 120-12-7 | 69.7 | 19.2 | 19.2 | | | |
| | Fluoranthene | 206-44-0 | 224 | 14.6 | 14.6 | | | |
| | Pyrene | 129-00-0 | 338 | 14.8 | 14.8 | | | B |
| | Benzo(a)Anthracene | 53-70-3 | 98.5 | 18.7 | 18.7 | | | |
| | Chrysene | 218-01-9 | 97.6 | 14.0 | 14.0 | | | |
| | Benzo(b)Fluoranthene | 205-99-2 | 166 | 29.1 | 29.1 | | | |
| | Benzo(k)Fluoranthene | 207-08-9 | 56.8 | 23.1 | 23.1 | | | |
| | Benzo(e)Pyrene | 192-97-2 | 97.9 | 24.5 | 24.5 | | | |
| | Benzo(a)Pyrene | 50-32-8 | 93.4 | 39.8 | 39.8 | | | |
| | Perylene | 198-55-0 | ND | 39.1 | 39.1 | | | U |
| | Indeno(123-cd)Pyrene | 193-39-5 | 115 | 46.9 | 46.9 | | | |
| | Benzo(ghi)Perylene | 191-24-2 | 239 | 31.5 | 31.5 | | | |
| | Dibenzo(a,h)Anthracene | 53-70-3 | ND | 35.5 | 35.5 | | | U |
| ES | 13C-Naphthalene (ES) | | | | 0.380 | 50-150% | 54.6% | |
| | 13C-Acenaphthylene (ES) | | | | 1.55 | 50-150% | 77.8% | |
| | 13C-Acenaphthene (ES) | | | | 1.31 | 50-150% | 84.1% | |
| | 13C-Fluorene (ES) | | | | 1.51 | 50-150% | 80.4% | |
| | 13C-Phenanthrene (ES) | | | | 1.02 | 50-150% | 77.1% | |
| | 13C-Anthracene (ES) | | | | 1.37 | 50-150% | 104.9% | |
| | 13C-Fluoranthene (ES) | | | | 22.7 | 50-150% | 100.0% | |
| | 13C-Pyrene (ES) | | | | 4.78 | 50-150% | 76.0% | |
| | 13C-Benzo(a)Anthracene (ES) | | | | 3.96 | 50-150% | 70.0% | |
| | 13C-Chrysene (ES) | | | | 3.68 | 50-150% | 114.7% | |
| | 13C-Benzo(b)Fluoranthene (ES) | | | | 7.99 | 50-150% | 66.7% | |
| | 13C-Benzo(k)Fluoranthene (ES) | | | | 7.05 | 50-150% | 101.9% | |
| | 13C-Benzo(e)Pyrene (ES) | | | | 12.9 | 50-150% | 96.0% | |
| | 13C-Benzo(a)Pyrene (ES) | | | | 15.2 | 50-150% | 62.8% | |
| | d12-Perylene (ES) | | | | 8.99 | 50-150% | 93.4% | |
| | 13C-Indeno(123-cd)Pyrene (ES) | | | | 36.4 | 50-150% | 76.2% | |
| | 13C-Benzo(ghi)Perylene (ES) | | | | 10.2 | 50-150% | 97.7% | |
| | 13C-2-Methylnaphthalene (ES) | | | | 0.530 | 50-150% | 70.7% | |
| | 13C-Dibenzo(a,h)Anthracene (ES | | | | 18.7 | 50-150% | 91.1% | |
| SS | d10-Fluorene (SS) | | | | 2.18 | 70-130% | 125.2% | |
| | d14-Terphenyl (SS) | | | | 3.02 | 70-130% | 261.8% | Q |
| AS | d10-Anthracene (AS) | | | | 1.58 | 50-150% | 89.3% | |

## Enthalpy Analytical

Job No.: 0423-776-3 Modified CARB 429

Montrose Air Quality Services, LLC - Portland Client Project: ODEQ ACI Site: ACI Stack

| | | | | | |
|---|---|---|---|---|---|
| Enthalpy ID | 0423-776-005-1 | Prep Batch | EU15509 | Sample Vol (mL) | N/A |
| Sample Name | RB-PAH-1500 | Prep Date | 2023-06-30 15:10 | Extract Vol (mL) | 0.1 |
| Matrix | Air | Analysis Date | 2023-07-11 09:15 | Split Factor | 4 |
| Sampling Date | 2023-05-23 13:00 | Analyst | jemunoz | Method Code | WM-009 |
| Received Date | 2023-06-01 | Instrument | Gandalf | Sample Type | Sample |

| | Compound | CAS | Formatted Result ng | LOQ ng | EDL ng | Recovery Limits | Recovery | Flags |
|---|---|---|---|---|---|---|---|---|
| PAH | Naphthalene | 91-20-3 | 1180 | 13.0 | 13.0 | | | B |
| | 2-Methyl-naphthalene | 91-57-6 | 38.4 | 13.8 | 13.8 | | | B |
| | Acenaphthylene | 208-96-8 | ND | 12.3 | 12.3 | | | U |
| | Acenaphthene | 83-32-9 | ND | 14.9 | 14.9 | | | U |
| | Fluorene | 86-73-7 | 15.4 | 14.1 | 14.1 | | | B |
| | Phenanthrene | 85-01-8 | 221 | 15.3 | 15.3 | | | |
| | Anthracene | 120-12-7 | 39.2 | 18.4 | 18.4 | | | |
| | Fluoranthene | 206-44-0 | 89.8 | 12.9 | 12.9 | | | B |
| | Pyrene | 129-00-0 | 203 | 14.4 | 14.4 | | | B |
| | Benzo(a)Anthracene | 53-70-3 | 68.2 | 22.3 | 22.3 | | | |
| | Chrysene | 218-01-9 | 56.3 | 16.0 | 16.0 | | | |
| | Benzo(b)Fluoranthene | 205-99-2 | 80.0 | 30.4 | 30.4 | | | |
| | Benzo(k)Fluoranthene | 207-08-9 | 50.2 | 25.3 | 25.3 | | | |
| | Benzo(e)Pyrene | 192-97-2 | 86.3 | 28.4 | 28.4 | | | |
| | Benzo(a)Pyrene | 50-32-8 | ND | 49.8 | 49.8 | | | U |
| | Perylene | 198-55-0 | ND | 48.6 | 48.6 | | | U |
| | Indeno(123-cd)Pyrene | 193-39-5 | 65.4 | 41.2 | 41.2 | | | |
| | Benzo(ghi)Perylene | 191-24-2 | 197 | 29.1 | 29.1 | | | |
| | Dibenzo(a,h)Anthracene | 53-70-3 | ND | 37.2 | 37.2 | | | U |
| ES | 13C-Naphthalene (ES) | | | | 0.472 | 50-150% | 53.6% | |
| | 13C-Acenaphthylene (ES) | | | | 1.70 | 50-150% | 79.3% | |
| | 13C-Acenaphthene (ES) | | | | 1.66 | 50-150% | 77.5% | |
| | 13C-Fluorene (ES) | | | | 1.64 | 50-150% | 73.1% | |
| | 13C-Phenanthrene (ES) | | | | 1.26 | 50-150% | 79.2% | |
| | 13C-Anthracene (ES) | | | | 1.70 | 50-150% | 80.4% | |
| | 13C-Fluoranthene (ES) | | | | 23.2 | 50-150% | 133.3% | |
| | 13C-Pyrene (ES) | | | | 5.54 | 50-150% | 91.0% | |
| | 13C-Benzo(a)Anthracene (ES) | | | | 5.38 | 50-150% | 94.5% | |
| | 13C-Chrysene (ES) | | | | 5.01 | 50-150% | 120.3% | |
| | 13C-Benzo(b)Fluoranthene (ES) | | | | 7.20 | 50-150% | 84.7% | |
| | 13C-Benzo(k)Fluoranthene (ES) | | | | 6.35 | 50-150% | 126.1% | |
| | 13C-Benzo(e)Pyrene (ES) | | | | 12.5 | 50-150% | 120.8% | |
| | 13C-Benzo(a)Pyrene (ES) | | | | 14.7 | 50-150% | 109.4% | |
| | d12-Perylene (ES) | | | | 10.8 | 50-150% | 89.9% | |
| | 13C-Indeno(123-cd)Pyrene (ES) | | | | 35.3 | 50-150% | 87.6% | |
| | 13C-Benzo(ghi)Perylene (ES) | | | | 8.57 | 50-150% | 132.3% | |
| | 13C-2-Methylnaphthalene (ES) | | | | 0.816 | 50-150% | 66.7% | |
| | 13C-Dibenzo(a,h)Anthracene (ES | | | | 17.3 | 50-150% | 90.1% | |
| SS | d10-Fluorene (SS) | | | | 2.61 | 70-130% | 114.7% | |
| | d14-Terphenyl (SS) | | | | 4.58 | 70-130% | 306.5% | Q |
| AS | d10-Anthracene (AS) | | | | 1.49 | 50-150% | 77.5% | |

# QC Data

## Enthalpy Analytical

Job No.: 0423-776-3 Modified CARB 429

Montrose Air Quality Services, LLC - Portland Client Project: ODEQ ACI Site: ACI Stack

| | | | | | |
|---|---|---|---|---|---|
| Enthalpy ID | MB-15509-PAH | Prep Batch | EU15509 | Sample Vol (mL) | N/A |
| Sample Name | MB-15509-PAH | Prep Date | 2023-06-30 15:10 | Extract Vol (mL) | 0.1 |
| Matrix | air | Analysis Date | 2023-07-11 05:46 | Split Factor | 4 |
| Sampling Date | | Analyst | jemunoz | Method Code | WM-009 |
| Received Date | | Instrument | Gandalf | Sample Type | Blank |

| | Compound | CAS | Formatted Result ng | LOQ ng | EDL ng | Recovery Limits | Recovery | Flags |
|---|---|---|---|---|---|---|---|---|
| PAH | Naphthalene | 91-20-3 | 2370 | 3.71 | 0.183 | | | |
| | 2-Methyl-naphthalene | 91-57-6 | 39.1 | 1.00 | 0.0817 | | | |
| | Acenaphthylene | 208-96-8 | 0.375 | 1.00 | 0.478 | | | |
| | Acenaphthene | 83-32-9 | 0.954 | 1.00 | 0.212 | | | J |
| | Fluorene | 86-73-7 | 9.62 | 1.71 | 0.0498 | | | |
| | Phenanthrene | 85-01-8 | 9.58 | 1.00 | 0.0686 | | | |
| | Anthracene | 120-12-7 | 0.945 | 1.68 | 0.0792 | | | |
| | Fluoranthene | 206-44-0 | 13.1 | 1.00 | 0.114 | | | |
| | Pyrene | 129-00-0 | 53.4 | 1.00 | 0.118 | | | |
| | Benzo(a)Anthracene | 53-70-3 | 1.06 | 1.00 | 0.0989 | | | |
| | Chrysene | 218-01-9 | 2.20 | 1.00 | 0.0959 | | | |
| | Benzo(b)Fluoranthene | 205-99-2 | 2.57 | 1.00 | 0.0980 | | | |
| | Benzo(k)Fluoranthene | 207-08-9 | 0.888 | 1.00 | 0.0982 | | | J |
| | Benzo(e)Pyrene | 192-97-2 | 2.50 | 1.00 | 0.0946 | | | |
| | Benzo(a)Pyrene | 50-32-8 | 1.83 | 1.00 | 0.137 | | | |
| | Perylene | 198-55-0 | 0.667 | 1.00 | 0.143 | | | J |
| | Indeno(123-cd)Pyrene | 193-39-5 | 1.95 | 1.00 | 0.131 | | | |
| | Benzo(ghi)Perylene | 191-24-2 | 6.52 | 1.00 | 0.111 | | | |
| | Dibenzo(a,h)Anthracene | 53-70-3 | 0.499 | 1.00 | 0.125 | | | J |
| ES | 13C-Naphthalene (ES) | | | | 0.0205 | 50-150% | 53.0% | |
| | 13C-Acenaphthylene (ES) | | | | 0.0167 | 50-150% | 55.7% | |
| | 13C-Acenaphthene (ES) | | | | 0.0133 | 50-150% | 72.2% | |
| | 13C-Fluorene (ES) | | | | 0.0157 | 50-150% | 76.0% | |
| | 13C-Phenanthrene (ES) | | | | 0.0140 | 50-150% | 95.0% | |
| | 13C-Anthracene (ES) | | | | 0.0187 | 50-150% | 91.7% | |
| | 13C-Fluoranthene (ES) | | | | 0.0469 | 50-150% | 76.0% | |
| | 13C-Pyrene (ES) | | | | 0.0365 | 50-150% | 75.4% | |
| | 13C-Benzo(a)Anthracene (ES) | | | | 0.0267 | 50-150% | 93.5% | |
| | 13C-Chrysene (ES) | | | | 0.0249 | 50-150% | 84.4% | |
| | 13C-Benzo(b)Fluoranthene (ES) | | | | 0.0341 | 50-150% | 78.8% | |
| | 13C-Benzo(k)Fluoranthene (ES) | | | | 0.0301 | 50-150% | 83.9% | |
| | 13C-Benzo(e)Pyrene (ES) | | | | 0.0408 | 50-150% | 85.2% | |
| | 13C-Benzo(a)Pyrene (ES) | | | | 0.0481 | 50-150% | 71.0% | |
| | d12-Perylene (ES) | | | | 0.0419 | 50-150% | 71.2% | |
| | 13C-Indeno(123-cd)Pyrene (ES) | | | | 0.0726 | 50-150% | 72.1% | |
| | 13C-Benzo(ghi)Perylene (ES) | | | | 0.0333 | 50-150% | 93.1% | |
| | 13C-2-Methylnaphthalene (ES) | | | | 0.00861 | 50-150% | 73.7% | |
| | 13C-Dibenzo(a,h)Anthracene (ES | | | | 0.0537 | 50-150% | 91.2% | |
| SS | d10-Fluorene (SS) | | | | 0.0119 | 70-130% | 115.0% | |
| | d14-Terphenyl (SS) | | | | 0.0259 | 70-130% | 286.1% | Q |
| AS | d10-Anthracene (AS) | | | | 0.0162 | 50-150% | 111.6% | |

## Enthalpy Analytical

Job No.: 0423-776-3 Modified CARB 429

Montrose Air Quality Services, LLC - Portland Client Project: ODEQ ACI Site: ACI Stack

| | | | | | |
|---|---|---|---|---|---|
| Enthalpy ID | BCS-15509-PAH | Prep Batch | EU15509 | Sample Vol (mL) | N/A |
| Sample Name | BCS-15509-PAH | Prep Date | 2023-06-30 15:10 | Extract Vol (mL) | 0.1 |
| Matrix | air | Analysis Date | 2023-07-11 04:24 | Split Factor | N/A |
| Sampling Date | | Analyst | jemunoz | Method Code | WM-009 |
| Received Date | | Instrument | Gandalf | Sample Type | Control |

| | Compound | CAS | Formatted Result ng | LOQ ng | EDL ng | Recovery Limits | Recovery | Flags |
|---|---|---|---|---|---|---|---|---|
| PAH | Naphthalene | 91-20-3 | 86.5 | 3.71 | 0.0255 | 30-130% | 108.1% | B |
| | 2-Methyl-naphthalene | 91-57-6 | 78.2 | 1.00 | 0.0225 | 30-130% | 97.7% | B |
| | Acenaphthylene | 208-96-8 | 86.9 | 1.00 | 0.0204 | 30-130% | 108.7% | |
| | Acenaphthene | 83-32-9 | 89.9 | 1.00 | 0.0380 | 30-130% | 112.4% | |
| | Fluorene | 86-73-7 | 81.5 | 1.71 | 0.0294 | 30-130% | 101.9% | B |
| | Phenanthrene | 85-01-8 | 78.2 | 1.00 | 0.0162 | 30-130% | 97.8% | B |
| | Anthracene | 120-12-7 | 77.0 | 1.68 | 0.0163 | 30-130% | 96.3% | |
| | Fluoranthene | 206-44-0 | 76.1 | 1.00 | 0.0173 | 30-130% | 95.1% | B |
| | Pyrene | 129-00-0 | 78.8 | 1.00 | 0.0200 | 20-150% | 98.5% | B |
| | Benzo(a)Anthracene | 53-70-3 | 80.4 | 1.00 | 0.0181 | 30-130% | 100.5% | |
| | Chrysene | 218-01-9 | 84.5 | 1.00 | 0.0189 | 30-130% | 105.6% | |
| | Benzo(b)Fluoranthene | 205-99-2 | 79.3 | 1.00 | 0.0288 | 30-130% | 99.1% | |
| | Benzo(k)Fluoranthene | 207-08-9 | 78.4 | 1.00 | 0.0293 | 30-130% | 98.0% | |
| | Benzo(e)Pyrene | 192-97-2 | 79.5 | 1.00 | 0.0286 | 30-130% | 99.4% | |
| | Benzo(a)Pyrene | 50-32-8 | 82.8 | 1.00 | 0.0382 | 30-130% | 103.5% | |
| | Perylene | 198-55-0 | 75.8 | 1.00 | 0.0388 | 30-130% | 94.7% | |
| | Indeno(123-cd)Pyrene | 193-39-5 | 85.2 | 1.00 | 0.0469 | 30-130% | 106.5% | |
| | Benzo(ghi)Perylene | 191-24-2 | 77.6 | 1.00 | 0.0427 | 30-130% | 97.0% | |
| | Dibenzo(a,h)Anthracene | 53-70-3 | 81.4 | 1.00 | 0.0519 | 30-130% | 101.7% | |
| ES | 13C-Naphthalene (ES) | | | | 0.00227 | 50-150% | 59.5% | |
| | 13C-Acenaphthylene (ES) | | | | 0.0112 | 50-150% | 90.7% | |
| | 13C-Acenaphthene (ES) | | | | 0.00520 | 50-150% | 93.3% | |
| | 13C-Fluorene (ES) | | | | 0.00713 | 50-150% | 100.2% | |
| | 13C-Phenanthrene (ES) | | | | 0.00718 | 50-150% | 119.8% | |
| | 13C-Anthracene (ES) | | | | 0.00963 | 50-150% | 125.6% | |
| | 13C-Fluoranthene (ES) | | | | 0.0192 | 50-150% | 90.1% | |
| | 13C-Pyrene (ES) | | | | 0.00717 | 50-150% | 87.9% | |
| | 13C-Benzo(a)Anthracene (ES) | | | | 0.0162 | 50-150% | 116.3% | |
| | 13C-Chrysene (ES) | | | | 0.0150 | 50-150% | 104.8% | |
| | 13C-Benzo(b)Fluoranthene (ES) | | | | 0.0171 | 50-150% | 99.6% | |
| | 13C-Benzo(k)Fluoranthene (ES) | | | | 0.0151 | 50-150% | 99.1% | |
| | 13C-Benzo(e)Pyrene (ES) | | | | 0.0172 | 50-150% | 99.4% | |
| | 13C-Benzo(a)Pyrene (ES) | | | | 0.0202 | 50-150% | 92.4% | |
| | d12-Perylene (ES) | | | | 0.0134 | 50-150% | 96.5% | |
| | 13C-Indeno(123-cd)Pyrene (ES) | | | | 0.0218 | 50-150% | 87.9% | |
| | 13C-Benzo(ghi)Perylene (ES) | | | | 0.0129 | 50-150% | 105.2% | |
| | 13C-2-Methylnaphthalene (ES) | | | | 0.00470 | 50-150% | 83.2% | |
| | 13C-Dibenzo(a,h)Anthracene (ES | | | | 0.0210 | 50-150% | 103.1% | |
| SS | d10-Fluorene (SS) | | | | 0.00542 | 70-130% | 105.8% | |
| | d14-Terphenyl (SS) | | | | 0.0153 | 70-130% | 272.7% | Q |
| AS | d10-Anthracene (AS) | | | | 0.00797 | 50-150% | 145.0% | |

# Narrative Summary

# Enthalpy Analytical Narrative Summary

| | |
|---|---|
| Company | Montrose Air Quality Services, LLC - Portland |
| Job No. | 0423-776-3 Modified CARB 429 |
| Client ID. | ODEQ ACI Project Site: ACI Stack |

**1. Custody**

Braidy May received the samples via FEDEX on June 01, 2023 after being relinquished by Montrose Air Quality Services, LLC - Portland. The samples were received in good condition in a cooler at 5.6°C and two boxes at 4.9°C and 2.6°C .

Prior to, during, and after analysis, the samples were kept under lock with access only to authorized personnel by Enthalpy Analytical, LLC.

**Table 1 - Sample Inventory**

| EU Lab Sample ID | Client Sample ID | Matrix |
|---|---|---|
| 0423-776-001-1 | 1-PAH-1500 | Air |
| 0423-776-002-1 | 2-PAH-1500 | Air |
| 0423-776-003-1 | 3-PAH-1500 | Air |
| 0423-776-004-1 | FB-PAH-1500 | Air |
| 0423-776-005-1 | RB-PAH-1500 | Air |

**2. Methods and Analytes**

A list of analytes of interest and corresponding methods of analysis is shown in Table 3. Abbreviations are defined in the listed Appendices.

**Table 3 - Methods and Analytes**

| EU Method | Analytes |
|---|---|
| EU-052 | PAH |

**3. Analysis**

The samples were analyzed by SOP EU052 (EPA Modified Method Carb 429) for PAHs using Agilent Technologies Model# 6890 High-Resolution GC/ Waters High-Resolution Mass-Spectrometer (HRGC/HRMS “Gandalf”).

After sampling by the client, the laboratory spiked the samples with Extraction Standard (ES) prior to extraction via Soxhlet Dean-Stark (SDS) procedure. After solvent exchange, each extract was spiked with Alternate Standard (AS). The extracts were divided into four parts. Three quarters of each extract was archived.

Cleanup procedures were performed on the remaining quarter of each extract. Each final sample extract was transferred to an autosampler vial and spiked with Injection Standard (JS), prior to analysis.

**4. Calibration**

The Initial Calibration (ICAL), Initial Calibration Verification (ICV), and the continuing calibration verification (concal) met method criteria.

# Enthalpy Analytical Narrative Summary

| | |
|---|---|
| Company | Montrose Air Quality Services, LLC - Portland |
| Job No. | 0423-776-3 Modified CARB 429 |
| Client ID. | ODEQ ACI Project Site: ACI Stack |

**5. QC Notes**

The HRMS system displayed mass resolving power of at least 10,000 during the analysis.

Analytes are detected in the method blank (MB) above LOQ. Any analyte detected in the samples with less than 10 times the amount detected in MB is notated with a B qualifier. Insuffcient sample remained to re-extract. Results may be biased high.

Several compounds in BCS-15221-PAH also had B qualifiers applied due to the amount in the extract not being more than 10 times the amount in the method blank extract. However, the background did not cause any unacceptable recoveries to be measured. The data is reported as-is with no adverse impact.

Lab QCs (method blank and BCS) pass method control limits for all sampling surrogates (SS) with the exception of d14-Terphenyl (SS) in MB-15509-PAH and is notated with a Q qualifier.

GC column performance check passed method criteria.

The sample was extracted within the 30-day from sample receipt holding time and analyzed within the 45-day from extraction to analysis holding time required by the method.

Samples received above 4 °C, client notified in order acknowledgment documentation.

**6. Reporting Notes**

Samples were treated to a dilution factor of sixty (D60) and one hundred twenty (D120) prior to initial analysis. Data results from the D120 extracts resulted in multiple analytes exceeding the highest calibration point. Naphthalene saturated the detector in the following samples: 1-PAH-1500, 2-PAH-1500, and 3-PAH-1500. Further dilution would result in loss of ES. Insufficient sample remained to re-extract. The data is reported as-is.

Analyte concentration that exceeds the instrument's calibration range is flagged with an "E" in the "Qualifiers" column on the sample the report pages. This condition does not imply additional measurement uncertainty.

Analyte concentration that saturates the instruments detector result in a flat-topped peak with a peak area of 1.073x10 e 9 or more. These results will have less accuracy than the values within the instrument calibration range.

Analyte concentration and matrix influenced chromatographic noise resulted in elevelated EDLs. LOQ has been adjusted to match the EDL where applicable.

Labeled standards in the samples that fell outside the control limits for AS/ES recovery are denoted by the "Q" qualifier. The target analytes are quantified based on their ratio to their ES standard analogs. As a result, low or high labeled standard recovery does not cause any change to ratios or contribute any additional error in the measurement of the target analyte(s). The data has been accepted and reported with no further action.

Per CARB-429 8.2.2, Acceptable surrogate (field spike) recoveries should range from 50 to 150 percent. If field spike recoveries are not within the acceptable range, this must be clearly indicated in the laboratory report. The affected sampling run must be identified in the report of the calculated emissions data.

# Enthalpy Analytical Narrative Summary

| | |
|---|---|
| Company | Montrose Air Quality Services, LLC - Portland |
| Job No. | 0423-776-3 Modified CARB 429 |
| Client ID. | ODEQ ACI Project Site: ACI Stack |

Lab EU-052 SOP provides further clarification: Surrogate Standard or Sampling Standard (SS) are labeled compounds introduced inside the sampling media before the sampling event. SS recovery values are computed in such a manner as to correct for losses occurring during the extraction fractionation-concentration steps so that feedback on performance is specific to the sampling event.

The results presented in this report are representative of the samples as provided to the laboratory.

These analyses met the requirements of the TNI Standard. Any deviations from the requirements of the reference method or TNI Standard have been stated above.

Enthalpy Analytical, LLC in Wilmington NC is accredited by the Louisiana Department of Environmental Quality to the 2009 TNI Standard under certificate number 05075.

# General Reporting Notes – Data Qualifiers

The following are general reporting notes that are applicable to all Enthalpy Analytical, LLC - Wilmington, NC data reports, unless specifically noted otherwise.

**General Data Qualifiers**

- B – The analyte was found in the method blank, at a concentration that was at least 10% of the amount in the sample.
- Cxx – Two or more congeners co-elute. In EDDs, C denotes the lowest IUPAC congener in a co-elution group and additional co-eluters for the group ('xx') are shown with the number of the lowest IUPAC co-eluter.
- E – The reported concentration exceeds the calibration range (upper point of the calibration curve). For HRMS data, this condition does not imply additional measurement uncertainty. For LC-MS/MS data, these values should be considered as having measurement uncertainty higher than values within the calibration range.
- EDL – Estimated Detection Level: The EDL is unique to isotope dilution methods and reflects the conditions of analysis at the time of analysis, including the equipment used. Where the MDL is a static value, the EDL is a dynamic value.
- EMPC – Estimated Maximum Possible Concentration: EMPC is specific to Dioxin/Furan tests to indicate the determined ion-abundance ratio was outside the allowed theoretical range (usually due to being near the detection limit, although it can very rarely be caused by a co-eluting interference). The EMPC concentration is adjusted to reflect the value at the theoretical ion-abundance ratio.
- IR – The ion ratio between the primary and secondary ions was observed to be outside the method criteria. The analyte concentration may be inaccurate due to interference.
- J – The analyte has a concentration below the minimum calibration level (LOQ value) but greater than the LOD. These values should be considered as having measurement uncertainty higher than values within the calibration range
- L - Indicates that an analyte has a concentration below the Minimum Detection Limit (MDL). The reported concentration is not recommended for regulatory use as the analyte signal may have a signal-to-noise ratio less than the criteria deemed necessary to be considered a detected analyte.
- LOD – Limit of Detection: For reports conforming to the DOD ELAP QSM, this is the QSM-defined LOD. For reports conforming to TNI requirements (but not DOD ELAP QSM requirements), this value is the minimum detection limit (MDL). The LOD is adjusted for sample weight or volume.
- LOQ – Limit of Quantitation: For reports conforming to the DOD ELAP QSM, this is the QSM-defined LOQ. For reports conforming to TNI requirements (but not DOD ELAP QSM requirements), this value is the reporting limit (RL). The LOQ is adjusted for sample weight or volume.

- <LOD() – Analyte was not found at a concentration high enough to be reported as detected. It is reported as less than the LOD, and the LOD is given in the parentheses.
- <LOQ() – Analyte was not found at a concentration high enough to be reported as above the QSM-defined LOQ or TNI defined Reporting Limit. It is reported as less than the LOQ, and the LOQ is given in the parentheses.
- ND – Indicates a non-detect.
- NR – Indicates a value that is not reportable due to issues observed in sample preparation or analysis.
- PR – The associated congener(s) is(are) poorly resolved.
- QI – Indicates the presence of a quantitative interference.
- RL – Reporting Limit. Lowest reportable value. The level is higher than the MDL.
- SI – Denotes "Single Ion Mode" and is utilized for PCBs where the secondary ion trace has a significantly elevated noise level due to background PFK. Responses for such peaks are calculated using an EMPC approach based solely on the primary ion area(s) and may be considered estimates.
- U – The analyte was not detected.
- V / Q – The labeled standard recovery is not within method control limits.
- X – Indicates the result is from re-injection/repeat/second-column analysis.

**Lab Identifiers/ Data Attributes**

- AR – Indicates use of the archived portion of the sample extract.
- CU – Indicates a sample that required additional clean-up prior to HRMS injection/processing.
- D – Dilution Data. Result was obtained from the analysis of a dilution. The number that follows the "D" indicates the dilution factor.
- DE – Indicates a dilution performed with the addition of ES (Extraction Standard) solution.
- DUP – Designation for a duplicate sample.
- MS – Designation for a matrix spike.
- MSD – Designation for a matrix spike duplicate.
- R – Indicates a re-extraction of the sample.
- RJ – Indicates a reinjection of the sample extract.

- S – Indicates a sample split. The number that follows the "S" indicates the split factor.
- SAT – Indicates an analyte saturated the detector.

# Sample Custody

MONTROSE AIR QUALITY SERVICES

# CHAIN OF CUSTODY

Non DG. Shipment 1 of 1.

0423-776

**Portland Location**
13585 NE Whitaker Way
Portland, OR 97230
Phone (503) 255-5050 | Fax (503) 255-0505

**Lab info:**
*PM confirmed 1 COC only. rest are copies CK 6/5/23

Enthalpy Analytical
2714 Exchange Drive
Wilmington, NC 28405

| | | |
|---|---|---|
| **Client / Project:** ODEQ ACI | **Project / Sample Location:** ACI Stack | **Test / Analytical Method:** Collection: EPA SW-846 Method 0010 / Analysis: CARB 429 |
| **Project No.:** PROJ-021372 | **Purchase Order No:** | **Special Analysis / Reporting Instructions:** Samples will be collected via EPA SW-846 Method 0010 |
| **Send Analytical Report To:** Portland QA/QC: : PortlandQA-QC@montrose-env.com sewolfendale@montrose-env.com | **Sampler or PM Signature:** [signature] | PAH Suite - Samples will be analyzed via CARB 429 using a high-resoltuion GC (to ensure ng level detection limit) |

| Run / Sample No. | Date | Time | Containers | Sample Fraction | Reagent | Lab / Sample ID No. |
|---|---|---|---|---|---|---|
| 1-PAH-1500 | 5/23/23 | 0950-1250 | 1 | Container 1 - filter | filter | Fedex, 2 boxs |
| " | " | " | 1 | Container 2a - FH rinse - acetone | acetone | boxA - 4.9°C T13 |
| " | " | " | 1 | Container 2b - FH rinse - toluene | toluene | boxB - 2.6°C T13 |
| " | " | " | 1 | Container 3 - Sorbent Trap | XAD-2 | boxA - 772304745614 |
| " | " | " | 1 | Container 4 - [KO] & Impinger Contents, Condensate | -- | boxB - 772304746194 |
| " | " | " | 1 | Container 5a - BH rinse - acetone | acetone | On Ice, no seal |
| " | " | " | 1 | Container 5b - BH rinse - toluene | toluene | Good condition, Bu 6-1-23 |
| | | | | | -- | Fedex, cooler |
| 2-PAH-1500 | 5/23/23 | 1410-1710 | 7 | Run 2 - same containers as run 1 | | ,772308039052, |
| 3-PAH-1500 | 5/24/23 | 0925-1225 | 7 | Run 3 - same contaners as run 1 | | On Ice, T13, |
| FB-PAH-1500 | 5/23/23 | 1300 | 7 | Field Blank - same containers as run 1 | | no seal, |
| RB-A-1500 | 5/23/23 | 1300 | 1 | acetone reagent blank | acetone | Good condition, |
| RB-T-1500 | 5/23/23 | 1300 | 1 | toluene reagent blank | toluene | Bu 6-1-23 |
| RB-DI-1500 | 5/23/23 | 1300 | 1 | DI H2O reagent blank | DI H2O | |
| RB-Filter-1500 | 5/23/23 | 1300 | 1 | filter blank | filter | |
| RB-XAD-1500 | 5/23/23 | 1300 | 1 | XAD-2 sorbent trap blank | XAD-2 | |
| **Total Containers** | | | 33 | | | |

| Relinquished by | Date | Time | Received by | Date | Time | Temp. |
|---|---|---|---|---|---|---|
| [signature] | 5/31/23 | 1500. | Braidy Mary | 6-1-23 | 11:27 | 5.6 |
| Relinquished by | Date | Time | Received by | Date | Time | Temp. |
| Relinquished by | Date | Time | Received by | Date | Time | Temp. |



M0010 CoC.xlsm

MONTROSE
AIR QUALITY SERVICES

# CHAIN OF CUSTODY

DG Box 1 of 2 -

Lab info:
0423-776

**Portland Location**
13585 NE Whitaker Way
Portland, OR 97230
Phone (503) 255-5050 | Fax (503) 255-0505

Enthalpy Analytical
2714 Exchange Drive
Wilmington, NC 28405

| | | |
|---|---|---|
| **Client / Project:** ODEQ ACI | **Project / Sample Location:** ACI Stack | **Test / Analytical Method:** Collection: EPA SW-846 Method 0010 / Analysis: CARB 429 |
| **Project No.:** PROJ-021372 | **Purchase Order No:** | **Special Analysis / Reporting Instructions:** Samples will be collected via EPA SW-846 Method 0010 |
| **Send Analytical Report To:** Portland QA/QC: : PortlandQA-QC@montrose-env.com sewolfendale@montrose-env.com | **Sampler or PM Signature:** | PAH Suite - Samples will be analyzed via CARB 429 using a high-resoltuion GC (to ensure ng level detection limit) |

| Run / Sample No. | Date | Time | Containers | Sample Fraction | Reagent | Lab / Sample ID No. |
|---|---|---|---|---|---|---|
| 1-PAH-1500 | 5/23/23 | 0950-1250 | 1 | Container 1 - filter | filter | |
| " | " | " | 1 | Container 2a - FH rinse - acetone | acetone | |
| " | " | " | 1 | Container 2b - FH rinse - toluene | toluene | |
| " | " | " | 1 | Container 3 - Sorbent Trap | XAD-2 | |
| " | " | " | 1 | Container 4 - [KO] & Impinger Contents, Condensate | -- | |
| " | " | " | 1 | Container 5a - BH rinse - acetone | acetone | |
| " | " | " | 1 | Container 5b - BH rinse - toluene | toluene | |
| | | | | | -- | |
| 2-PAH-1500 | 5/23/23 | 1410-1710 | 7 | Run 2 - same containers as run 1 | | |
| 3-PAH-1500 | 5/24/23 | 0925-1225 | 7 | Run 3 - same contaners as run 1 | | |
| FB-PAH-1500 | 5/23/23 | 1300 | 7 | Field Blank - same containers as run 1 | | |
| RB-A-1500 | 5/23/23 | 1300 | 1 | acetone reagent blank | acetone | |
| RB-T-1500 | 5/23/23 | 1300 | 1 | toluene reagent blank | toluene | |
| RB-DI-1500 | 5/23/23 | 1300 | 1 | DI H2O reagent blank | DI H2O | |
| RB-Filter-1500 | 5/23/23 | 1300 | 1 | filter blank | filter | |
| RB-XAD-1500 | 5/23/23 | 1300 | 1 | XAD-2 sorbent trap blank | XAD-2 | |
| **Total Containers** | | | 33 | | | |

| | | | | | | |
|---|---|---|---|---|---|---|
| Relinquished by | Date 5/31/23 | Time 1100 | Received by | Date | Time | Temp. |
| Relinquished by | Date | Time | Received by | Date | Time | Temp. |
| Relinquished by | Date | Time | Received by | Date | Time | Temp. |



ODEQ ACI - M0010 CoC.xlsm

288 of 489
W006AS-021372-RT-2857

MONTROSE AIR QUALITY SERVICES

# CHAIN OF CUSTODY

DG box 2 of 2.

0423-776

**Lab info:**

Enthalpy Analytical
2714 Exchange Drive
Wilmington, NC 28405

**Portland Location**
13585 NE Whitaker Way
Portland, OR 97230
Phone (503) 255-5050 | Fax (503) 255-0505

| | | |
|---|---|---|
| **Client / Project:** ODEQ ACI | **Project / Sample Location:** ACI Stack | **Test / Analytical Method:** Collection: EPA SW-846 Method 0010 / Analysis: CARB 429 |
| **Project No.:** PROJ-021372 | **Purchase Order No:** | **Special Analysis / Reporting Instructions:** Samples will be collected via EPA SW-846 Method 0010<br>PAH Suite - Samples will be analyzed via CARB 429 using a high-resoltuion GC (to ensure ng level detection limit) |
| **Send Analytical Report To:** Portland QA/QC: : PortlandQA-QC@montrose-env.com<br>sewolfendale@montrose-env.com | **Sampler or PM Signature:** | |

| Run / Sample No. | Date | Time | Containers | Sample Fraction | Reagent | Lab / Sample ID No. |
|---|---|---|---|---|---|---|
| 1-PAH-1500 | 5/23/23 | 0950-1250 | 1 | Container 1 - filter | filter | |
| " | " | " | 1 | Container 2a - FH rinse - acetone | acetone | |
| " | " | " | 1 | Container 2b - FH rinse - toluene | toluene | |
| " | " | " | 1 | Container 3 - Sorbent Trap | XAD-2 | |
| " | " | " | 1 | Container 4 - [KO] & Impinger Contents, Condensate | -- | |
| " | " | " | 1 | Container 5a - BH rinse - acetone | acetone | |
| " | " | " | 1 | Container 5b - BH rinse - toluene | toluene | |
| | | | | | -- | |
| 2-PAH-1500 | 5/23/23 | 1410-1710 | 7 | Run 2 - same containers as run 1 | | |
| 3-PAH-1500 | 5/24/23 | 0925-1225 | 7 | Run 3 - same contaners as run 1 | | |
| FB-PAH-1500 | 5/23/23 | 1300 | 7 | Field Blank - same containers as run 1 | | |
| RB-A-1500 | 5/23/23 | 1300 | 1 | acetone reagent blank | acetone | |
| RB-T-1500 | 5/23/23 | 1300 | 1 | toluene reagent blank | toluene | |
| RB-DI-1500 | 5/23/23 | 1300 | 1 | DI H2O reagent blank | DI H2O | |
| RB-Filter-1500 | 5/23/23 | 1300 | 1 | filter blank | filter | |
| RB-XAD-1500 | 5/23/23 | 1300 | 1 | XAD-2 sorbent trap blank | XAD-2 | |
| **Total Containers** | | | 33 | | | |

| Relinquished by | Date | Time | Received by | Date | Time | Temp. |
|---|---|---|---|---|---|---|
| | 5/31/23 | 1100. | | | | |
| Relinquished by | Date | Time | Received by | Date | Time | Temp. |
| Relinquished by | Date | Time | Received by | Date | Time | Temp. |

# This Is The Last Page Of This Report.

Run 1

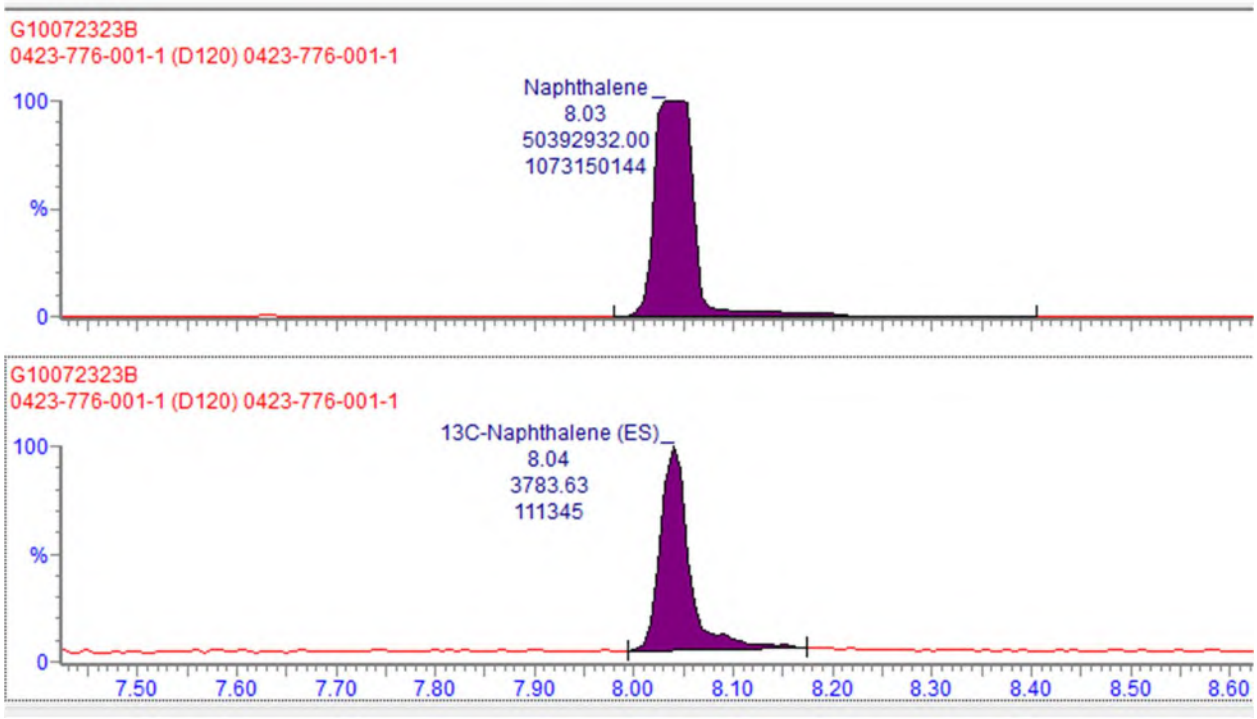
G10072323B
0423-776-001-1 (D120) 0423-776-001-1
Naphthalene
8.03
50392932.00
1073150144
100
%
0
G10072323B
0423-776-001-1 (D120) 0423-776-001-1
13C-Naphthalene (ES)
8.04
3783.63
111345
100
%
0
7.50
7.60
7.70
7.80
7.90
8.00
8.10
8.20
8.30
8.40
8.50
8.60

Run 2

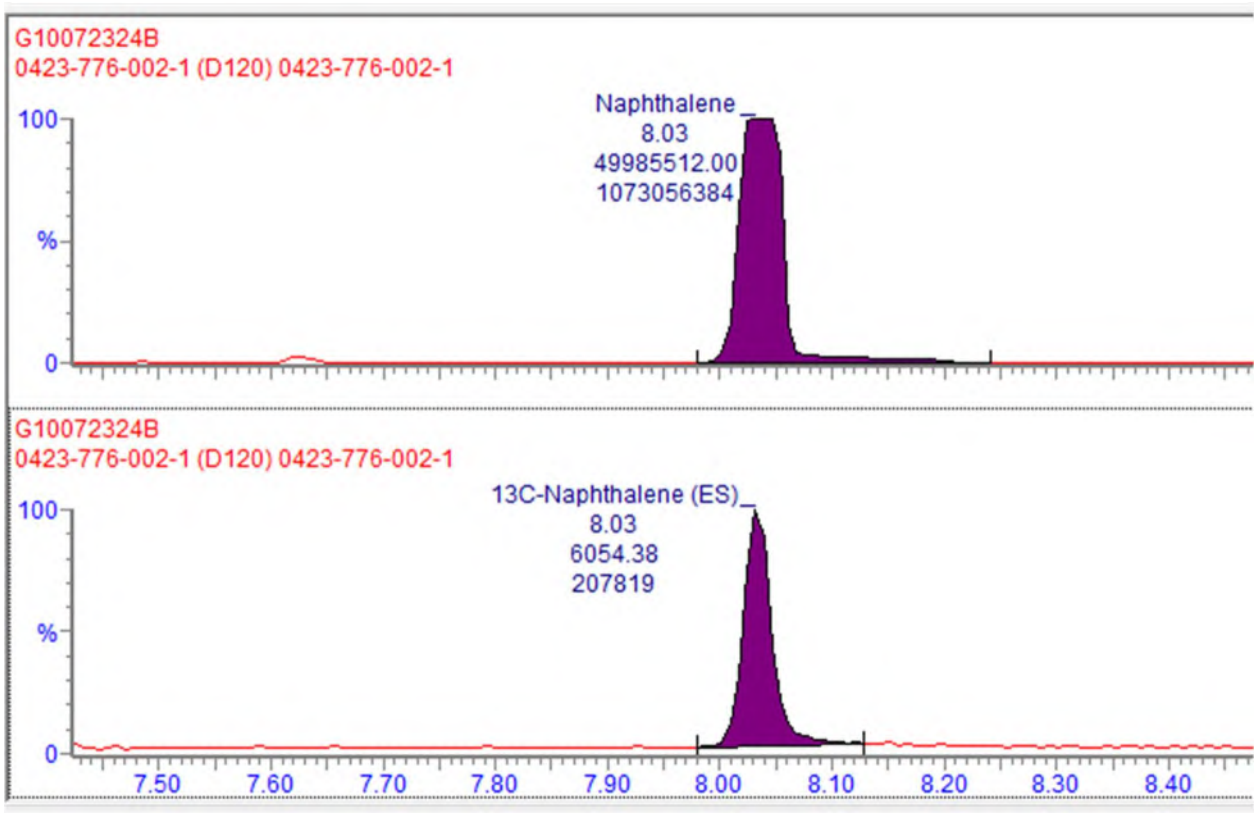
G10072324B
0423-776-002-1 (D120) 0423-776-002-1
Naphthalene
8.03
49985512.00
1073056384
100
%
0
G10072324B
0423-776-002-1 (D120) 0423-776-002-1
13C-Naphthalene (ES)
8.03
6054.38
207819
100
%
0
7.50
7.60
7.70
7.80
7.90
8.00
8.10
8.20
8.30
8.40

Run 3

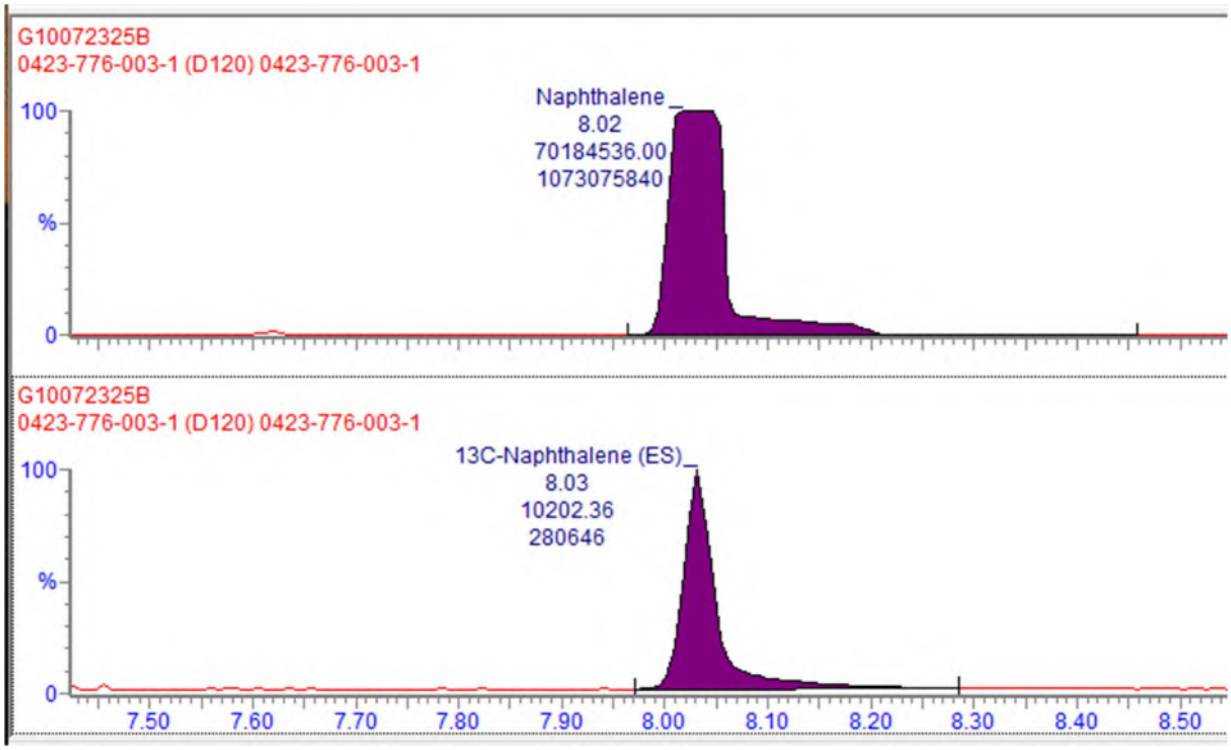


Field Blank

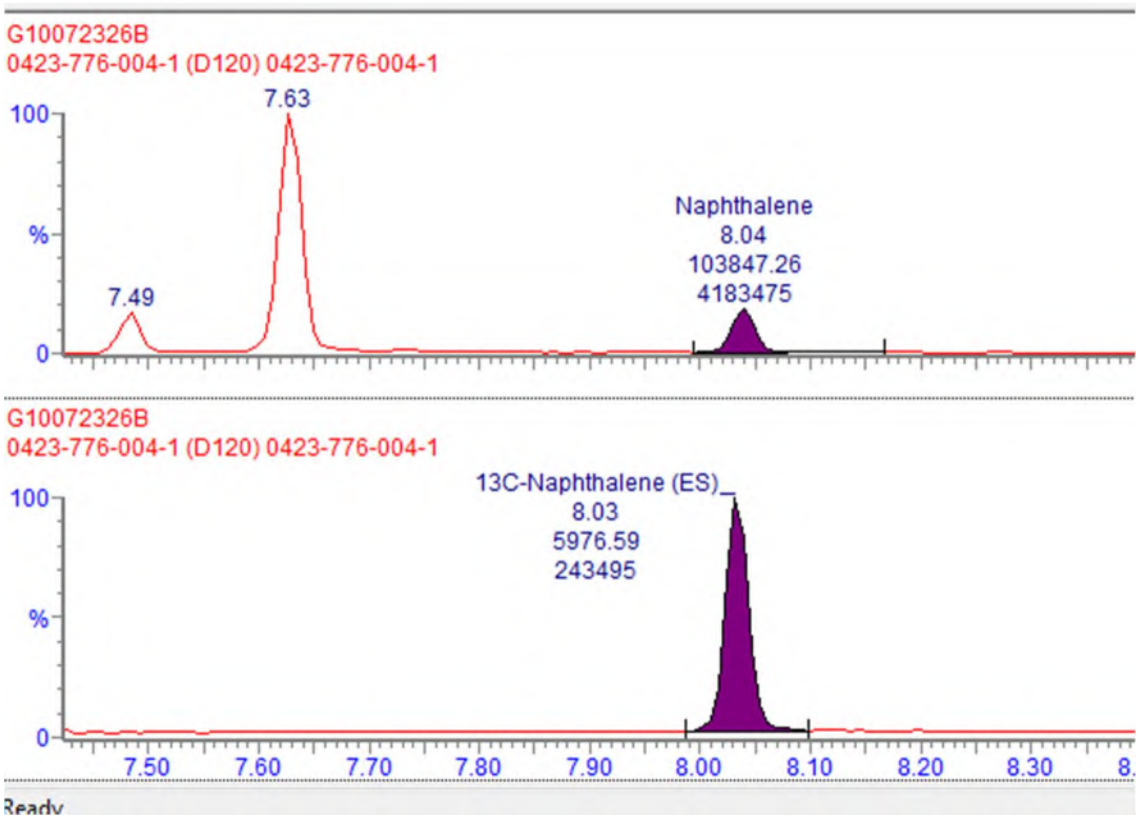

Reagent Blank

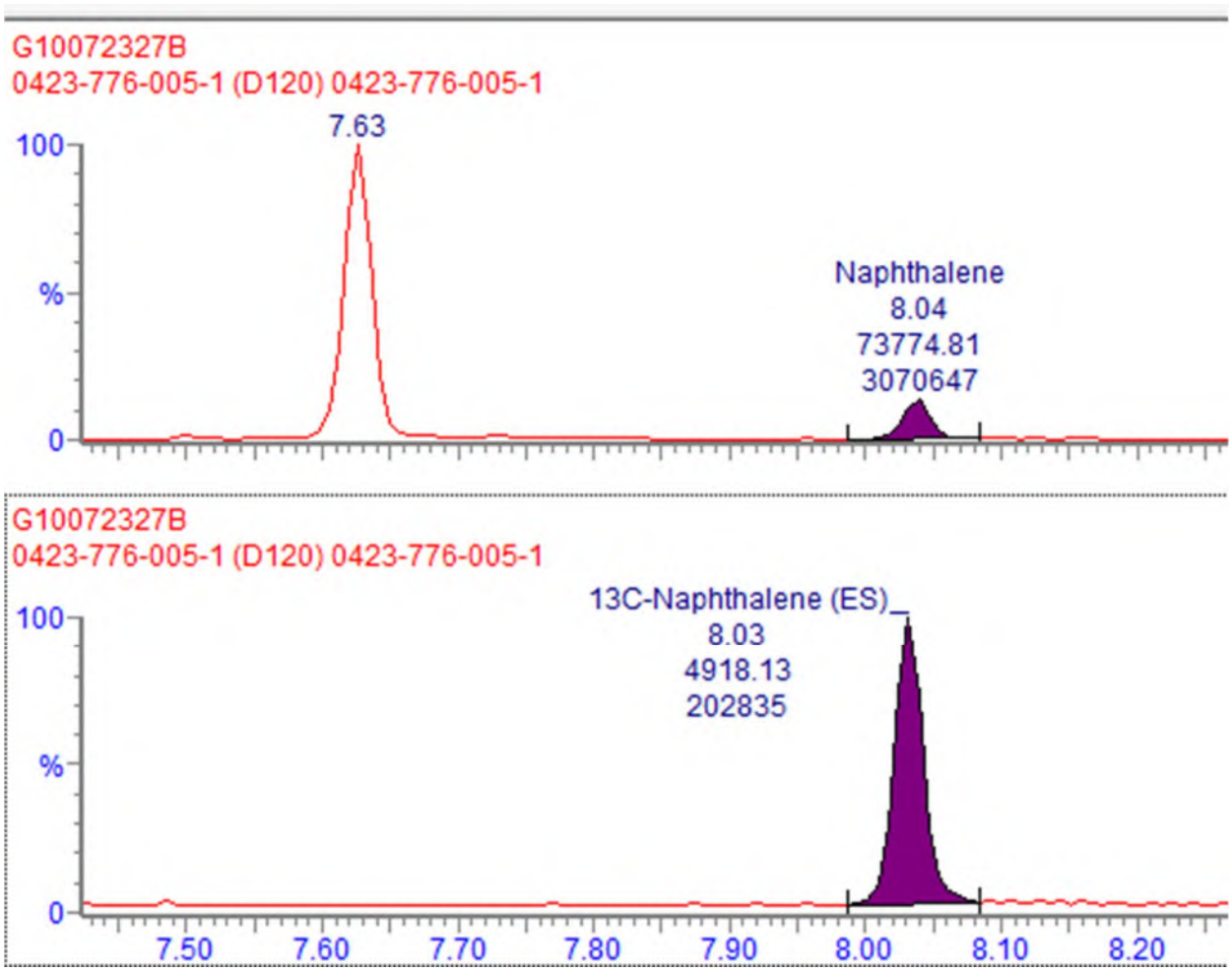

# Appendix C.4
# NCASI Analyses

# Atmospheric Analysis & Consulting, Inc.

| | | |
|---|---|---|
| Client | : | Montrose AQS |
| Client Project Name | : | ODEQ ACI |
| Client Project Number | : | PROJ-021372 |
| AAC Project Number | : | 231051 |
| Reporting Date | : | 06/15/2023 |

On June 2, 2023, Atmospheric Analysis & Consulting, Inc. received eleven (11) liquid samples for Formaldehyde and Acrolein analysis by NCASI 99.02. Upon receipt, each sample was assigned a unique Laboratory ID number as follows:

| Client Sample ID | AAC Sample ID |
|---|---|
| R-1 | 231051-45082 |
| R-2A | 231051-45083 |
| R-2B | 231051-45084 |
| R-3A | 231051-45085 |
| R-3B | 231051-45086 |
| R-TS | 231051-45087 |
| R-FB-1 | 231051-45088 |
| R-FB-2 | 231051-45089 |
| R-EB | 231051-45090 |
| R-AS | 231051-45091 |
| R-AS-2 | 231051-45092 |

**This analysis is performed in accordance with AAC's Quality Manual.** Test results apply to the sample(s) as received. For detailed information pertaining to specific EPA, NCASI, ASTM and SCAQMD accreditations (Methods & Analytes), please visit our website at www.aaclab.com.

I certify that this data is technically accurate, complete, and in compliance with the terms and conditions of the contract.

No problems were encountered during receiving, preparation, and/or analysis of these samples. The Laboratory Director or his/her designee, as verified by the following signature, has authorized release of the data contained in this hardcopy report.

If you have any questions or require further explanation of data results, please contact the undersigned.

Dr. Sucha Parmar, PhD.
Technical Director

This report consists of 25 pages.



2225 Sperry Ave., Ventura, CA 93003 www.aaclab.com • (805) 650-1642

# SAMPLE RECEIPT / LOG-IN REPORT

**Client Name:** Montrose Air Quality Services
**Project Name:** ODEQ ACI
**AAC Project No.: 231051**

**Sampled By:** Client
**Received By:** G. Ruelas
**Turn Around Time:** Normal (10days)
**Lab Due Date:** 06/09/2023
**Final Due Date:** 06/16/2023

| Sample Receipt Date Time | Clients ID | Sampling Date/Time | Sample # | Matrix | Analysis Requested |
|---|---|---|---|---|---|
| 06/02/2023 1009 | R-1-CAN | 05/24/2023 1440-1755 | 45075 | Summa Canister | TO15 |
| 06/02/2023 1009 | R-2A-CAN | 05/25/2023 0852-1152 | 45076 | Summa Canister | TO15 |
| 06/02/2023 1009 | R-2B-CAN | 05/25/2023 0852-1152 | 45077 | Summa Canister | TO15 |
| 06/02/2023 1009 | R-3A-CAN | 05/25/2023 1305-1605 | 45078 | Summa Canister | TO15 |
| 06/02/2023 1009 | R-3B-CAN | 05/25/2023 1305-1605 | 45079 | Summa Canister | TO15 |
| 06/02/2023 1009 | R-TS-CAN | 05/30/2023 1200-1500 | 45080 | Summa Canister | TO15 |
| 06/02/2023 1009 | R-TS-SPIKEDCAN | 05/30/2023 1200-1500 | 45081 | Summa Canister | TO15 |
| 06/02/2023 1009 | R-1 | 05/24/2023 1440-1755 | 45082 | Liquid | NCASI 99.02 |
| 06/02/2023 1009 | R-2A | 05/25/2023 0852-1152 | 45083 | Liquid | NCASI 99.02 |
| 06/02/2023 1009 | R-2B | 05/25/2023 0852-1152 | 45084 | Liquid | NCASI 99.02 |
| 06/02/2023 1009 | R-3A | 05/25/2023 1305-1605 | 45085 | Liquid | NCASI 99.02 |

# SAMPLE RECEIPT / LOG-IN REPORT

**Client Name:** Montrose Air Quality Services
**Project Name:** ODEQ ACI

**AAC Project No.: 231051**

**Sampled By:** Client
**Received By:** G. Ruelas

**Turn Around Time:** Normal (10days)
**Lab Due Date:** 06/09/2023
**Final Due Date:** 06/16/2023

| Sample Receipt Date Time | Clients ID | Sampling Date/Time | Sample # | Matrix | Analysis Requested |
|---|---|---|---|---|---|
| 06/02/2023 1009 | R-3B | 05/25/2023 1305-1605 | 45086 | Liquid | NCASI 99.02 |
| 06/02/2023 1009 | R-TS | 05/30/2023 1200-1500 | 45087 | Liquid | NCASI 99.02 |
| 06/02/2023 1009 | R-FB-1 | 05/25/2023 0900 | 45088 | Liquid | NCASI 99.02 |
| 06/02/2023 1009 | R-FB-2 | 05/30/2023 1200 | 45089 | Liquid | NCASI 99.02 |
| 06/02/2023 1009 | R-EB | 05/25/2023 0900 | 45090 | Liquid | NCASI 99.02 |
| 06/02/2023 1009 | R-AS | 05/25/2023 0900 | 45091 | Liquid | NCASI 99.02 |
| 06/02/2023 1009 | R-AS-2 | 05/30/2023 1200 | 45092 | Liquid | NCASI 99.02 |

**REMARKS:**
Client returned 8x cans (1x unused) + 3x FCs. 6.3°C.

Total Samples: 18

# CANISTER PRESSURE LOG

Client: Montrose Air Quality Services

Project No.: 231051

Date: 06/02/2023

| Canister # | Sample # | Initial Pressure mmHg | Final Pressure mmHg |
|---|---|---|---|
| VEN-501 | 45075 | 503.4 | 1025.2 |
| VEN-424 | 45076 | 569.6 | 1025.8 |
| VEN-101 | 45077 | 446.2 | 1022.9 |
| 1440 | 45078 | 555.6 | 1025.7 |
| 331 | 45079 | 311.2 | 1023.9 |
| 343 | 45080 | 359.0 | 1016.3 |
| VEN-405 | 45081 | 266.6 | 1022.3 |
| | | | |

1

MONTROSE
AIR QUALITY SERVICES

# CHAIN OF CUSTODY

231051

**Portland Location**
13585 NE Whitaker Way
Portland, OR 97230
Phone (503) 255-5050 | Fax (503) 255-0505

**Lab info:**
Atmospheric Analysis and Consulting (AAC)
2225 Sperry Avenue
Ventura CA 93003

| | | |
|---|---|---|
| **Client / Project:** ODEQ ACI | **Project / Sample Location:** ACI Stack | **Test / Analytical Method:** NCASI 99.02 |
| **Project No.:** PROJ-021372 | **Purchase Order No:** | **Special Analysis / Detection Limit / Reporting Instructions:** Selected HAPS: Acrolein, Benzene, Formaldehyde - ppb level |
| **Send Analytical Report To:** Portland QA/QC: PortlandQA-QC@montrose-env.com; sewolfendale@montrose-env.com | **Sampler or PM Signature:** | |

| Run / Sample No. | Date | Time | Containers | Sample Fraction | | Reagent | Lab / Sample ID No. |
|---|---|---|---|---|---|---|---|
| R-1 | 5/24/23 | 1440-1755 | 1 | 45082 | Impinger/Rinse | H2O | |
| R-2A | 5/25/23 | 0852-1152 | 1 | 45083 | Impinger/Rinse | H2O | |
| R-2B | 5/25/23 | 0852-1152 | 1 | 45084 | Impinger/Rinse | H2O | |
| R-3A | 5/25/23 | 1305-1605 | 1 | 45085 | Impinger/Rinse | H2O | |
| R-3B | 5/25/23 | 1305-1605 | 1 | 45086 | Impinger/Rinse - Spiked | H2O + Spike | |
| | | | | | | | |
| R-TS | 5/30/23 | 1200-1500 | 1 | 45087 | Train Spike | H2O + Spike | |
| R-FB-1 | 5/25/23 | 0900 | 1 | 45088 | Field Blank | H2O | |
| R-FB-2 | 5/30/23 | 1200 | 1 | 45089 | Field Blank | H2O | |
| R-EB | 5/25/23 | 0900 | 1 | 45090 | Equipment Blank | H2O | |
| R-AS | 5/25/23 | 0900 | 1 | 45091 | Aqueous Spike | H2O + Spike | |
| R-AS-2 | 5/30/23 | 1200. | 1 | 45092 | Aqueous Spike | H2O + Spike. | |
| | | | | | | | |
| | | | | | | | |
| | | | | | | | |
| | | | | | | | |
| **Total Containers** | | | ~~10~~ 11 | | | | |

| | Date | Time | Received by | Date | Time | Temp. |
|---|---|---|---|---|---|---|
| Relinquished by | 6/1/23 | 1200. | | 6/2/23 | 1004 | |
| Relinquished by | Date | Time | Received by | Date | Time | Temp. |
| Relinquished by | Date | Time | Received by | Date | Time | Temp. |

W006AS-021372-RT-2857

MONTROSE
AIR QUALITY SERVICES

# CHAIN OF CUSTODY

23105R
Box 2 of 2.

**Portland Location**
13585 NE Whitaker Way
Portland, OR 97230
Phone (503) 255-5050 | Fax (503) 255-0505

**Lab info:**
Atmospheric Analysis and Consulting (AAC)
2225 Sperry Avenue
Ventura CA 93003

| **Client / Project:** | **Project / Sample Location:** | **Test / Analytical Method:** |
|---|---|---|
| ODEQ ACI | ACI Stack | NCASI 99.02 |
| **Project No.:** | **Purchase Order No:** | **Special Analysis / Detection Limit / Reporting Instructions:** |
| PROJ-021372 | | |
| **Send Analytical Report To:** | **Sampler or PM Signature:** | Selected HAPS: Acrolein, Benzene, Formaldehyde - ppb level |
| Portland QA/QC: PortlandQA-QC@montrose-env.com<br>sewolfendale@montrose-env.com | | |

| Run / Sample No. | Date | Time | Containers | Sample Fraction | Reagent | Lab / Sample ID No. |
|---|---|---|---|---|---|---|
| R-1-CAN | 5/24/23 | 1440-1755 | 1 | 45075 canister | canister | |
| R-2A-CAN | 5/25/23 | 0852-1152 | 1 | 45076 canister | canister | |
| R-2B-CAN | 5/25/23 | 0852-1152 | 1 | 45077 canister | canister | |
| R-3A-CAN | 5/25/23 | 1305-1605 | 1 | 45078 canister | canister | |
| R-3B-CAN | 5/25/23 | 1305-1605 | 1 | 45079 spiked canister | spiked canister | |
| | | | | | | |
| R-TS-CAN | 5/30/23 | 1200-1500 | 1 | 45080 Train Spike - unspiked canister | canister | |
| R-TS-SPIKEDCAN | 5/30/23 | 1200-1500 | 1 | 45081 Train Spike - spiked canister | spiked canister | |
| | | | | | | |
| | | | | | | |
| | | | | | | |
| | | | | | | |
| | | | | | | |
| | | | | | | |
| | | | | | | |
| | | | | | | |
| **Total Containers** | | | 7 | | | |

| Relinquished by | Date | Time | Received by | Date | Time | Temp. |
|---|---|---|---|---|---|---|
| | 6/1/23 | 1200 | | 6/2/25 | 1009 | |
| Relinquished by | Date | Time | Received by | Date | Time | Temp. |
| | | | | | | |
| Relinquished by | Date | Time | Received by | Date | Time | Temp. |
| | | | | | | |

W006AS-021372-RT-2857
300 of 489

## *Laboratory Analysis Report*

*NCASI 94.02M*

Client : Montrose AQS
Client Project Name : ODEQ ACI
AAC Project Number : 231051
Analyst : CH

Sampling Date : 05/24-30/2023
Receiving Date : 06/02/2023
Analysis Date : 06/14/2023
Report Date : 06/15/2023

| Client Sample ID | AAC Sample ID | Sample Volume (mL) | Analyte | Measured Concentration (ug/Sample) | Sample Reporting Limit (ug/Sample) |
|---|---|---|---|---|---|
| R-1 | 231051-45082 | 84.0 | Formaldehyde | 200 | 4.20 |
| | | | Acrolein | 40.0 | 4.20 |
| R-2A | 231051-45083 | 86.0 | Formaldehyde | 89.6 | 4.30 |
| | | | Acrolein | <SRL | 4.30 |
| R-2B | 231051-45084 | 85.0 | Formaldehyde | 192 | 4.25 |
| | | | Acrolein | 14.7 | 4.25 |
| R-3A | 231051-45085 | 88.0 | Formaldehyde | 847 | 4.40 |
| | | | Acrolein | 90.0 | 4.40 |
| R-3B | 231051-45086 | 101 | Formaldehyde | 1023 | 5.05 |
| | | | Acrolein | 118 | 5.05 |
| R-TS | 231051-45087 | 89.0 | Formaldehyde | 225 | 4.45 |
| | | | Acrolein | 171 | 4.45 |
| R-FB-1 | 231051-45088 | 74.0 | Formaldehyde | <SRL | 3.70 |
| | | | Acrolein | <SRL | 3.70 |
| R-FB-2 | 231051-45089 | 74.0 | Formaldehyde | <SRL | 3.70 |
| | | | Acrolein | <SRL | 3.70 |
| R-EB | 231051-45090 | 74.0 | Formaldehyde | <SRL | 3.70 |
| | | | Acrolein | <SRL | 3.70 |
| R-AS | 231051-45091 | 76.0 | Formaldehyde | 156 | 3.80 |
| | | | Acrolein | 414 | 3.80 |
| R-AS-2 | 231051-45092 | 76.0 | Formaldehyde | 155 | 3.80 |
| | | | Acrolein | 409 | 3.80 |

MRL - Method Reporting Limit
SRL - Sample Reporting Limit (MRL x DF's x Sample Volume)
<SRL - Analyte was analyzed for but not detected at or above the SRL



2225 Sperry Ave., Ventura, CA 93003 www.aaclab.com • (805) 650-1642

## *Laboratory Analysis Report*

*NCASI 94.02M*

| | | | |
|---|---|---|---|
| Client | : Montrose AQS | Sampling Date | : 05/24-30/2023 |
| Client Project Name | : ODEQ ACI | Receiving Date | : 06/02/2023 |
| AAC Project Number | : 231051 | Analysis Date | : 06/14/2023 |
| Analyst | : CH | Report Date | : 06/14/2023 |

***Spiking Solution Evaluation***

| Client Sample ID | Sample Volume (mL) | Spike Amount (mL) | Analyte | Measured Concentration (ug/sample) | Target Concentration (ug/sample) | Internal Standard % Recovery | % Recovery |
|---|---|---|---|---|---|---|---|
| R-3B | 101.0 | 1.0 | Formaldehyde | 175 | 154 | NA | 113.8 |
| | | | Acrolein | 28.0 | 360 | | 7.79 |
| **Client Sample ID** | **Sample Volume (mL)** | **Spike Amount (mL)** | **Analyte** | **Measured Concentration (ug/ml)** | **Target Concentration (ug/ml)** | **Internal Standard % Recovery** | **% Recovery** |
| Field Spiking Solution (returned from the field and analyzed with | 23.0 | NA | Formaldehyde | 154 | 152 | NA | 101.3 |
| | | | Acrolein | 360 | 397 | | 90.6 |
| Lab Spiking Solution (retained at Lab and analyzed with samples) | 23.0 | NA | Formaldehyde | 152 | NA | NA | NA |
| | | | Acrolein | 397 | NA | | |

SRL - Sample Reporting Limit (MRL x DF's x Sample Volume)

<SRL - Analyte was analyzed for but not detected at or above the SRL

The target concentration for the returned Field spiking solution is based off of the measured Lab spiking solution

The target concentration for the Field Spike is based on the measured field spiking solution x the spiked amount

The measured Train Spike concentrations were corrected by subtracting the values measured from the corresponding un-spiked train

## *Quality Control/Quality Assurance Report*

**EPA 323 Modified**

*HPLC Calibration Verification of the 01/17/2023 Calibration*

Analysis Date : 06/14/2023 Instrument ID : HPLC 1200
Analyst : CH

| Sample ID | Analyte | Target Concentration (ug/mL) | Measured Concentration (ug/mL) | Percent Recovery (%)* |
|---|---|---|---|---|
| Opening CV | Formaldehyde | 2.50 | 2.66 | 106 |
| | Acrolein | 2.50 | 2.71 | 108 |
| Continuing CV | Formaldehyde | 2.50 | 2.71 | 108 |
| | Acrolein | 2.50 | 2.70 | 108 |
| Continuing CV | Formaldehyde | 2.50 | 2.65 | 106 |
| | Acrolein | 2.50 | 2.74 | 109 |
| Closing CV | Formaldehyde | 2.50 | 2.64 | 106 |
| | Acrolein | 2.50 | 2.71 | 108 |
| Second Source | Formaldehyde | 2.50 | 2.19 | 87.4 |
| | Acrolein | 2.50 | 2.21 | 88.3 |

* Must be 90 - 110 %
Second Source must be 85 - 115 %



2225 Sperry Ave., Ventura, CA 93003 www.aaclab.com • (805) 650-1642

## *Quality Control/Quality Assurance Report*

**EPA 323 Modified**

Analysis Date : 06/14/2023 Analyst : CH Instrument ID : HPLC 1200

*Laboratory Control Spike Analysis 1*

| Analyte | Sample Concentration (ug/mL) | Spike Concentration (ug/mL) | Measured Spike Concentration (ug/mL) | Measured Spike Dup Concentration (ug/mL) | Spike Recovery (%)* | Spike Dup Recovery (%)* | %RPD** |
|---|---|---|---|---|---|---|---|
| Formaldehyde | 0.000 | 1.25 | 1.13 | 1.21 | 90.5 | 96.7 | 6.7 |
| Acrolein | 0.000 | 1.25 | 1.18 | 1.26 | 94.4 | 101 | 6.9 |

* Must be 85-115%

** Must be ≤ 25%

*Matrix Spike Analysis (231051-45082)*

| Analyte | Sample Concentration (ug/mL) | Spike Concentration (ug/mL) | Measured Spike Concentration (ug/mL) | Measured Spike Dup Concentration (ug/mL) | Spike Recovery (%)* | Spike Dup Recovery (%)* | %RPD** |
|---|---|---|---|---|---|---|---|
| Formaldehyde | 0.594 | 1.25 | 1.80 | 1.80 | 96.1 | 96.3 | 0.2 |
| Acrolein | 0.127 | 1.25 | 1.47 | 1.47 | 107 | 108 | 0.4 |

* Must be 75-125%

** Must be ≤ 25%

## *Quality Control/Quality Assurance Report*

**EPA 323 Modified**

Analysis Date : 06/14/2023 Instrument ID : HPLC 1200
Analyst : CH

*Duplicate Analysis*

| Sample ID | Analyte | Dilution Factor | Sample Concentration (ug/mL) | Duplicate Concentration (ug/mL) | %RPD* |
|---|---|---|---|---|---|
| 231051-45090 | Formaldehyde | 2.0 | 0.051 | 0.051 | 1.6 |
| | Acrolein | 2.0 | <SRL | <SRL | NA |
| 231051-45083 | Formaldehyde | 2.0 | 1.04 | 1.06 | 1.7 |
| | Acrolein | 2.0 | 0.094 | 0.090 | 3.7 |
| 231051-45091 | Formaldehyde | 2.0 | 2.05 | 2.05 | 0.0 |
| | Acrolein | 2.0 | 5.45 | 5.41 | 0.8 |

* Must be <20%

*System and Method Blank Analysis*

| Sample ID | Analyte | Concentration (ug/mL) | RL / SRL (ug/mL) |
|---|---|---|---|
| Opening Acetonitrile Blank | Formaldehyde | <RL | 0.025 |
| | Acrolein | <RL | 0.025 |
| Method Blank | Formaldehyde | <SRL | 0.050 |
| | Acrolein | <SRL | 0.050 |
| Closing Acetonitrile Blank | Formaldehyde | <RL | 0.025 |
| | Acrolein | <RL | 0.025 |

RL - Reporting Limit
SRL - Sample Reporting Limit



2225 Sperry Ave., Ventura, CA 93003 www.aaclab.com • (805) 650-1642

# Sample Report
231051-45082

Agilent

**Data file:** C:\Users\Public\Documents\ChemStation\1\Data\2023\061423_EPA323M 2023-06-14 14-32-52\009-231051-45082.D

**Sample name:** 231051-45082

**Analysis method:** 011723TO11Calibration.M

**Sample Vial Number** 9

**Dilution** 1

**Injection date:** 06/14/2023 17:40:46

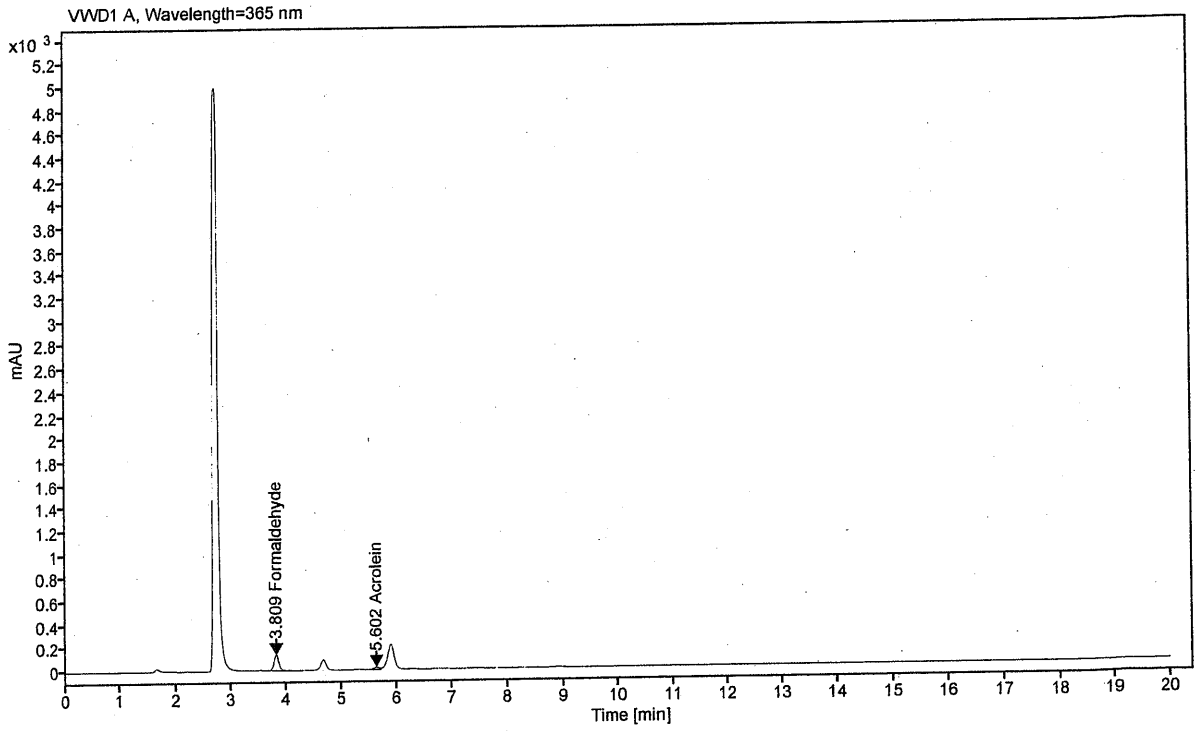


| Name | RT [min] | Area | Height | RF | Amount (ug/mL) |
|---|---|---|---|---|---|
| Formaldehyde | 3.809 | 795.6675 | 134.6802 | 0.00149 | 1.1889 |
| Acetaldehyde | | | | | 0.0000 |
| Acrolein | 5.602 | 138.8357 | 17.3224 | 0.00184 | 0.2549 |
| Acetone | | | | | 0.0000 |
| Propionaldehyde | | | | | 0.0000 |
| Crotonaldehyde | | | | | 0.0000 |
| Methacrolein | | | | | 0.0000 |
| MEK & Butyraldehyde | | | | | 0.0000 |
| Benzaldehyde | | | | | 0.0000 |
| Valderaldehyde | | | | | 0.0000 |
| m-Tolualdehyde | | | | | 0.0000 |
| Hexaldehyde | | | | | 0.0000 |

**Data file:** C:\Users\Public\Documents\ChemStation\1\Data\2023\061423_EPA323M 2023-06-14 14-32-52\014-231051-45083.D

**Sample name:** 231051-45083

**Analysis method:** 011723TO11Calibration.M

**Sample Vial Number** 14

**Dilution** 1

**Injection date:** 06/14/2023 19:37:44

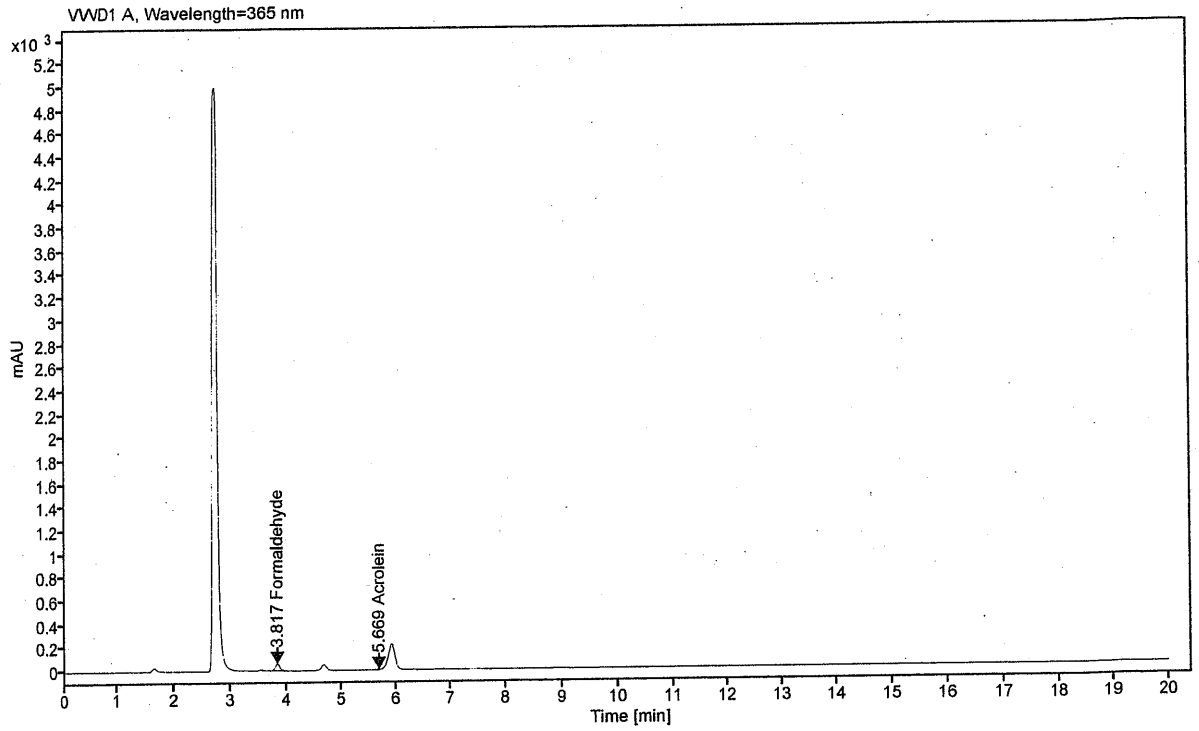


| Name | RT [min] | Area | Height | RF | Amount (ug/mL) |
|---|---|---|---|---|---|
| Formaldehyde | 3.817 | 348.6832 | 59.1383 | 0.00149 | 0.5210 |
| Acetaldehyde | | | | | 0.0000 |
| Acrolein | 5.669 | 25.4652 | 3.9258 | 0.00184 | 0.0468 |
| Acetone | | | | | 0.0000 |
| Propionaldehyde | | | | | 0.0000 |
| Crotonaldehyde | | | | | 0.0000 |
| Methacrolein | | | | | 0.0000 |
| MEK & Butyraldehyde | | | | | 0.0000 |
| Benzaldehyde | | | | | 0.0000 |
| Valderaldehyde | | | | | 0.0000 |
| m-Tolualdehyde | | | | | 0.0000 |
| Hexaldehyde | | | | | 0.0000 |

Page 13

6/14/15/23

**Data file:** C:\Users\Public\Documents\ChemStation\1\Data\2023\061423_EPA323M 2023-06-14 14-32-52\016-231051-45084.D

**Sample name:** 231051-45084

**Analysis method:** 011723TO11Calibration.M

**Sample Vial Number** 16

**Dilution** 1 **Injection date:** 06/14/2023 20:24:28

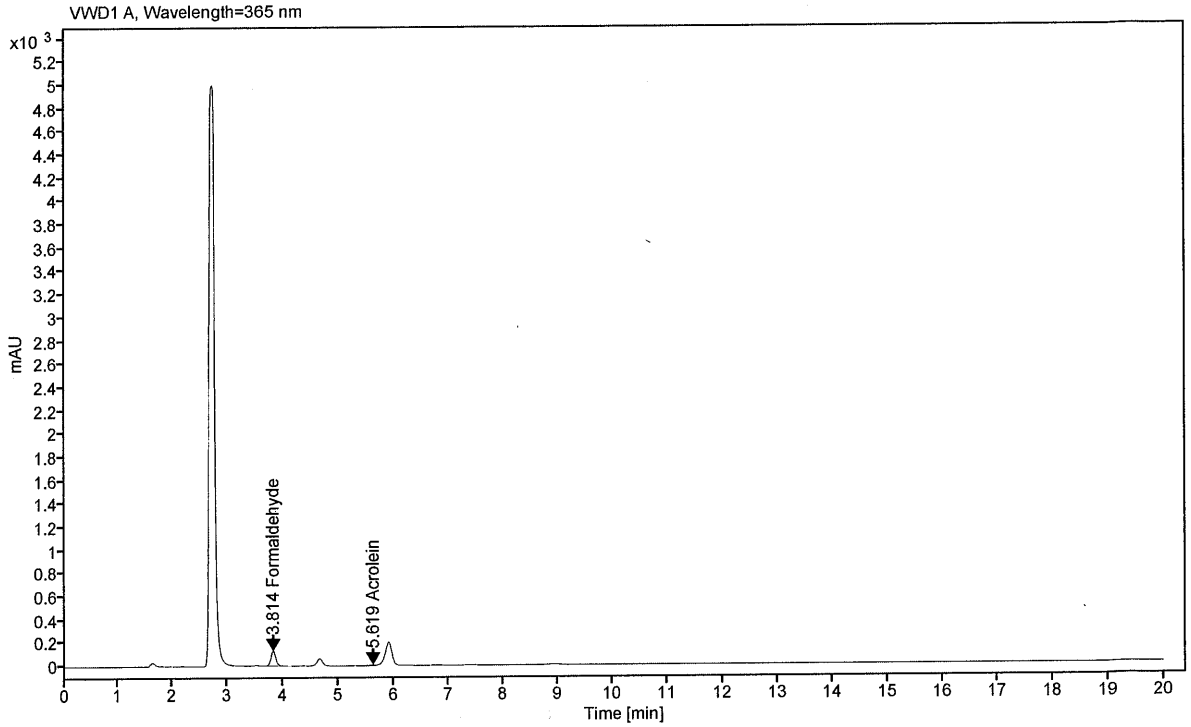


| Name | RT [min] | Area | Height | RF | Amount (ug/mL) |
|---|---|---|---|---|---|
| Formaldehyde | 3.814 | 755.3782 | 126.6779 | 0.00149 | 1.1287 |
| Acetaldehyde | | | | | 0.0000 |
| Acrolein | 5.619 | 47.1912 | 6.3930 | 0.00184 | 0.0867 |
| Acetone | | | | | 0.0000 |
| Propionaldehyde | | | | | 0.0000 |
| Crotonaldehyde | | | | | 0.0000 |
| Methacrolein | | | | | 0.0000 |
| MEK & Butyraldehyde | | | | | 0.0000 |
| Benzaldehyde | | | | | 0.0000 |
| Valderaldehyde | | | | | 0.0000 |
| m-Tolualdehyde | | | | | 0.0000 |
| Hexaldehyde | | | | | 0.0000 |

Page 14

6/15/23

**Data file:** C:\Users\Public\Documents\ChemStation\1\Data\2023\061423_EPA323M 2023-06-14 14-32-52\017-231051-45085.D

**Sample name:** 231051-45085

**Analysis method:** 011723TO11Calibration.M

**Sample Vial Number** 17

**Dilution** 1 **Injection date:** 06/14/2023 20:47:50

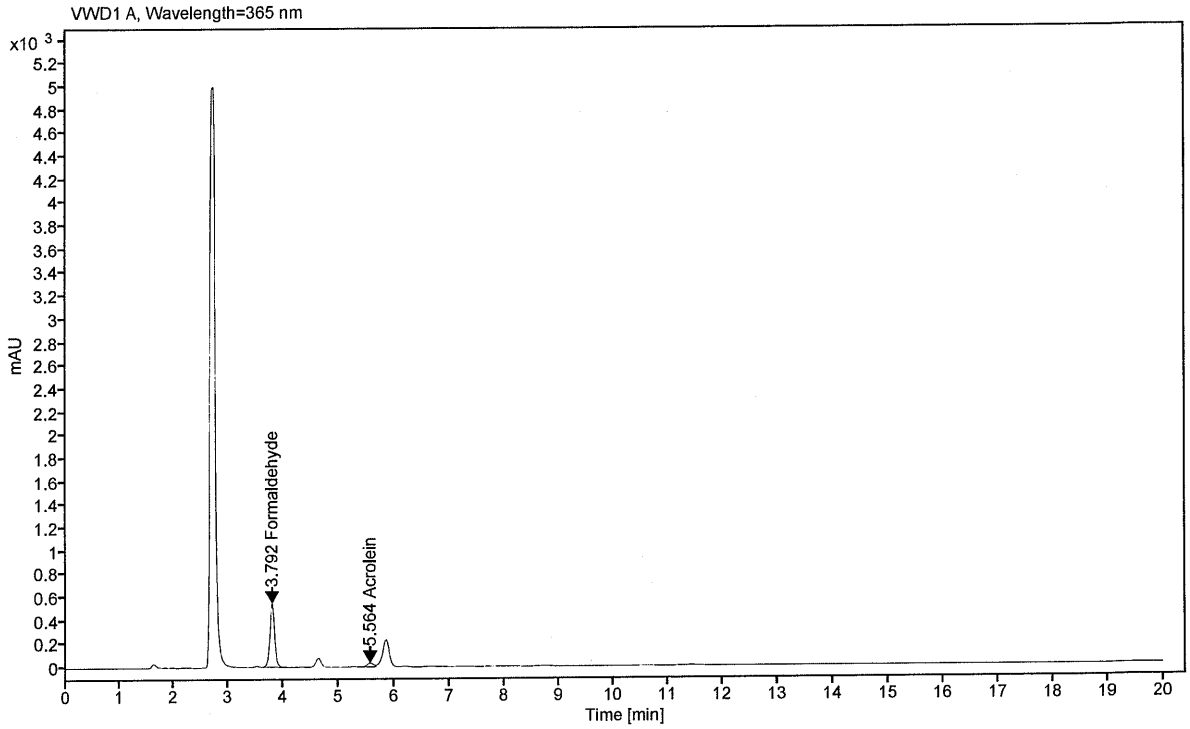


| Name | RT [min] | Area | Height | RF | Amount (ug/mL) |
|---|---|---|---|---|---|
| Formaldehyde | 3.792 | 3221.9604 | 539.9142 | 0.00149 | 4.8145 |
| Acetaldehyde | | | | | 0.0000 |
| Acrolein | 5.564 | 265.2586 | 32.9971 | 0.00184 | 0.4871 |
| Acetone | | | | | 0.0000 |
| Propionaldehyde | | | | | 0.0000 |
| Crotonaldehyde | | | | | 0.0000 |
| Methacrolein | | | | | 0.0000 |
| MEK & Butyraldehyde | | | | | 0.0000 |
| Benzaldehyde | | | | | 0.0000 |
| Valderaldehyde | | | | | 0.0000 |
| m-Tolualdehyde | | | | | 0.0000 |
| Hexaldehyde | | | | | 0.0000 |



6/15/23

**Data file:** C:\Users\Public\Documents\ChemStation\1\Data\2023\061423_EPA323M 2023-06-14 14-32-52\018-231051-45086.D

**Sample name:** 231051-45086

**Analysis method:** 011723TO11Calibration.M

**Sample Vial Number** 18

**Dilution** 1 **Injection date:** 06/14/2023 21:11:12

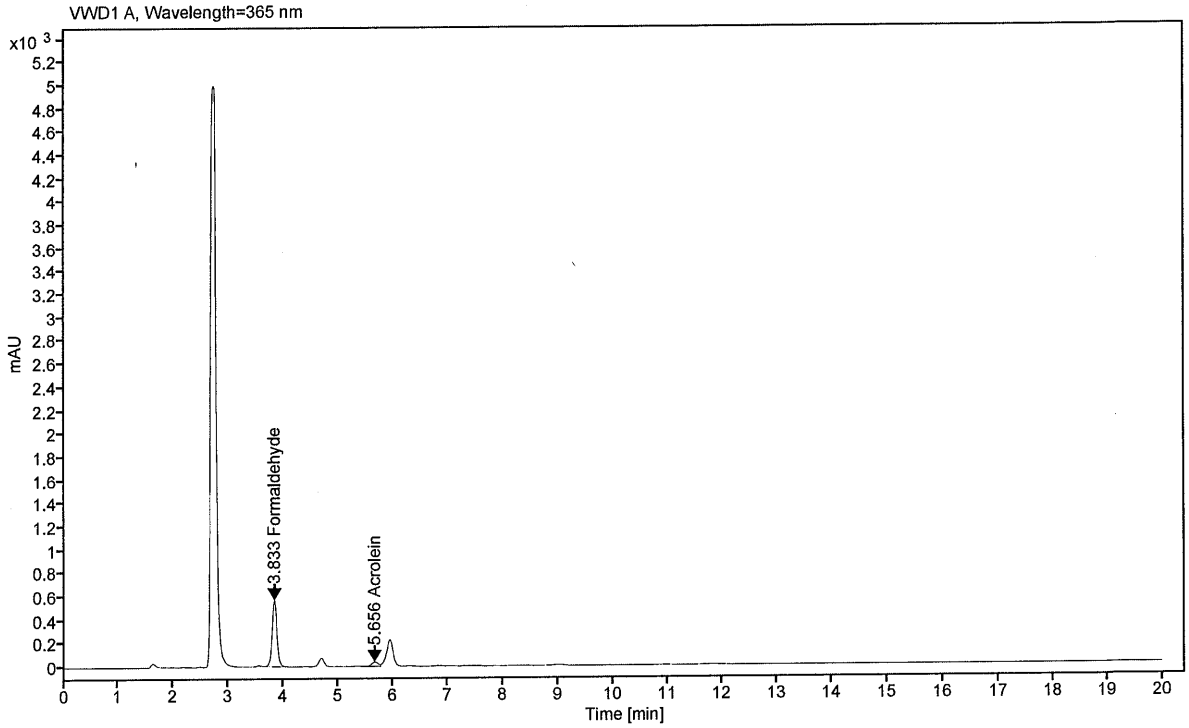


| Name | RT [min] | Area | Height | RF | Amount (ug/mL) |
|---|---|---|---|---|---|
| Formaldehyde | 3.833 | 3387.8069 | 563.1570 | 0.00149 | 5.0623 |
| Acetaldehyde | | | | | 0.0000 |
| Acrolein | 5.656 | 318.2295 | 37.7171 | 0.00184 | 0.5843 |
| Acetone | | | | | 0.0000 |
| Propionaldehyde | | | | | 0.0000 |
| Crotonaldehyde | | | | | 0.0000 |
| Methacrolein | | | | | 0.0000 |
| MEK & Butyraldehyde | | | | | 0.0000 |
| Benzaldehyde | | | | | 0.0000 |
| Valderaldehyde | | | | | 0.0000 |
| m-Tolualdehyde | | | | | 0.0000 |
| Hexaldehyde | | | | | 0.0000 |

Page 16

6/16/15/23

Agilent

**Data file:** C:\Users\Public\Documents\ChemStation\1\Data\2023\061423_EPA323M 2023-06-14 14-32-52\019-231051-45087.D

**Sample name:** 231051-45087

**Analysis method:** 011723TO11Calibration.M

**Sample Vial Number** 19

**Dilution** 1

**Injection date:** 06/14/2023 21:34:35

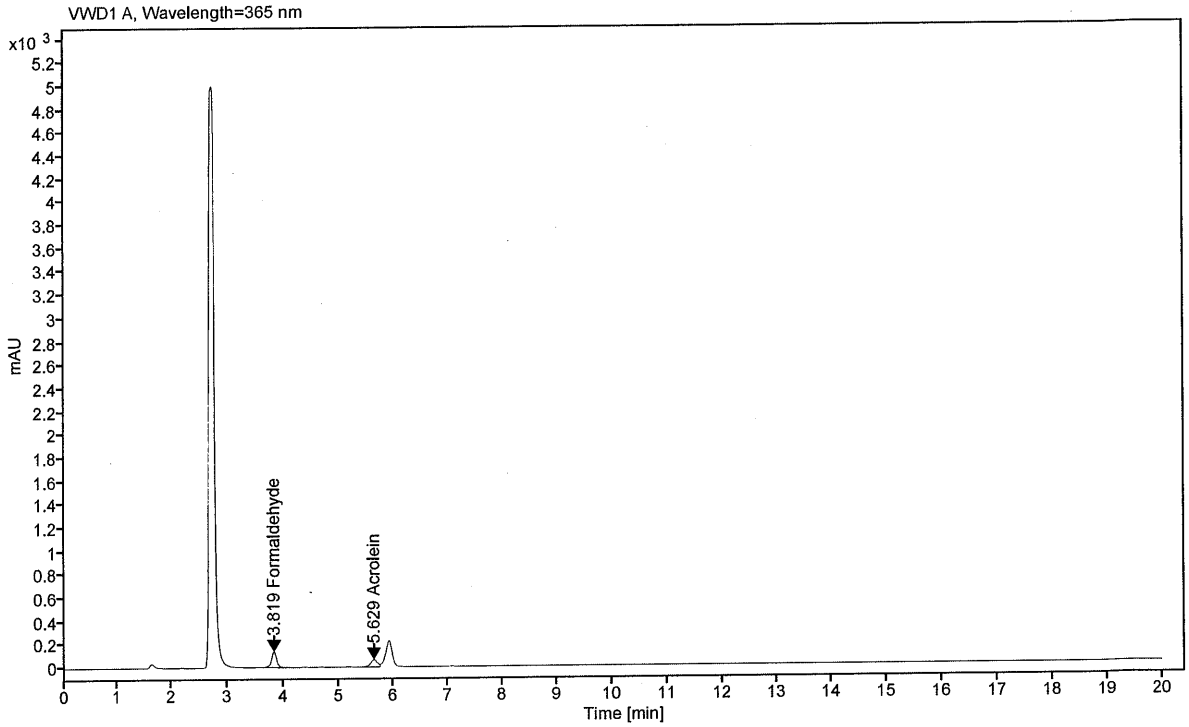


| Name | RT [min] | Area | Height | RF | Amount (ug/mL) |
|---|---|---|---|---|---|
| Formaldehyde | 3.819 | 847.2555 | 134.5739 | 0.00149 | 1.2660 |
| Acetaldehyde | | | | | 0.0000 |
| Acrolein | 5.629 | 523.0735 | 61.3520 | 0.00184 | 0.9605 |
| Acetone | | | | | 0.0000 |
| Propionaldehyde | | | | | 0.0000 |
| Crotonaldehyde | | | | | 0.0000 |
| Methacrolein | | | | | 0.0000 |
| MEK & Butyraldehyde | | | | | 0.0000 |
| Benzaldehyde | | | | | 0.0000 |
| Valderaldehyde | | | | | 0.0000 |
| m-Tolualdehyde | | | | | 0.0000 |
| Hexaldehyde | | | | | 0.0000 |



06/15/23

**Data file:** C:\Users\Public\Documents\ChemStation\1\Data\2023\061423_EPA323M 2023-06-14 14-32-52\020-231051-45088.D

**Sample name:** 231051-45088

**Analysis method:** 011723TO11Calibration.M

**Sample Vial Number** 20

**Dilution** 1 **Injection date:** 06/14/2023 21:58:00

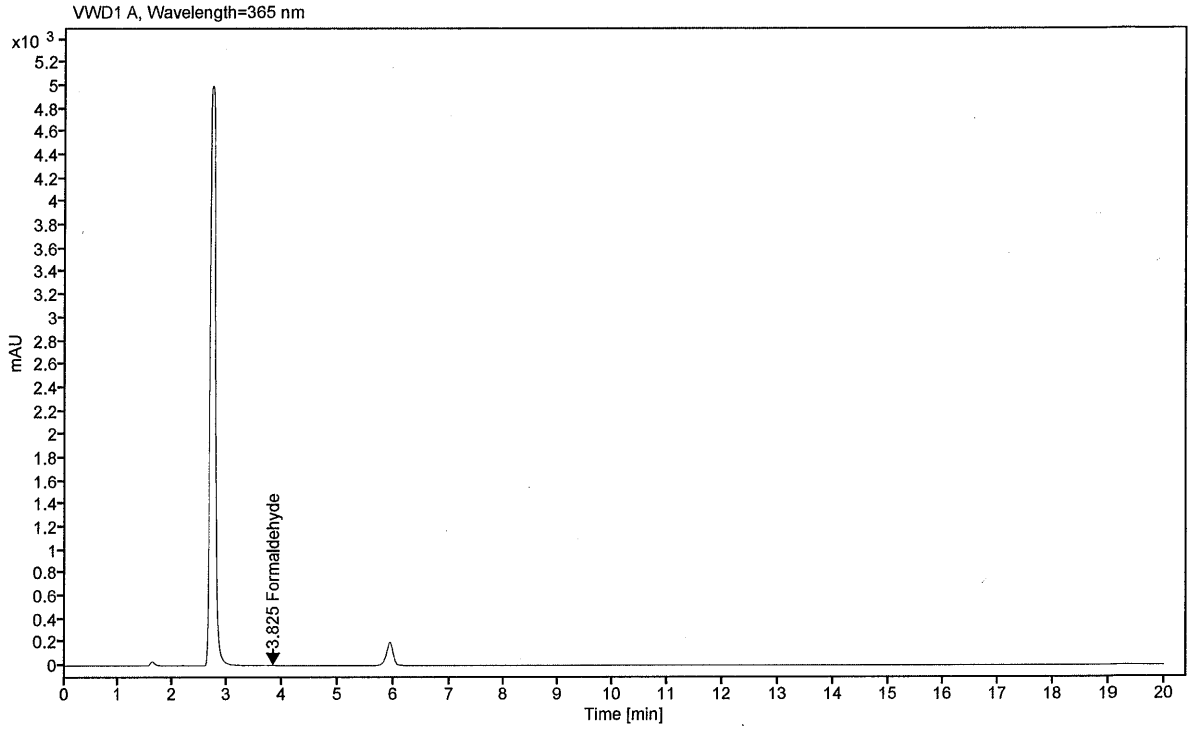


| Name | RT [min] | Area | Height | RF | Amount (ug/mL) |
|---|---|---|---|---|---|
| Formaldehyde | 3.825 | 15.6819 | 2.8128 | 0.00149 | 0.0234 |
| Acetaldehyde | | | | | 0.0000 |
| Acrolein | | | | | 0.0000 |
| Acetone | | | | | 0.0000 |
| Propionaldehyde | | | | | 0.0000 |
| Crotonaldehyde | | | | | 0.0000 |
| Methacrolein | | | | | 0.0000 |
| MEK & Butyraldehyde | | | | | 0.0000 |
| Benzaldehyde | | | | | 0.0000 |
| Valderaldehyde | | | | | 0.0000 |
| m-Tolualdehyde | | | | | 0.0000 |
| Hexaldehyde | | | | | 0.0000 |

**Data file:** C:\Users\Public\Documents\ChemStation\1\Data\2023\061423_EPA323M 2023-06-14 14-32-52\021-231051-45089.D

**Sample name:** 231051-45089

**Analysis method:** 011723TO11Calibration.M

**Sample Vial Number** 21

**Dilution** 1 **Injection date:** 06/14/2023 22:21:23

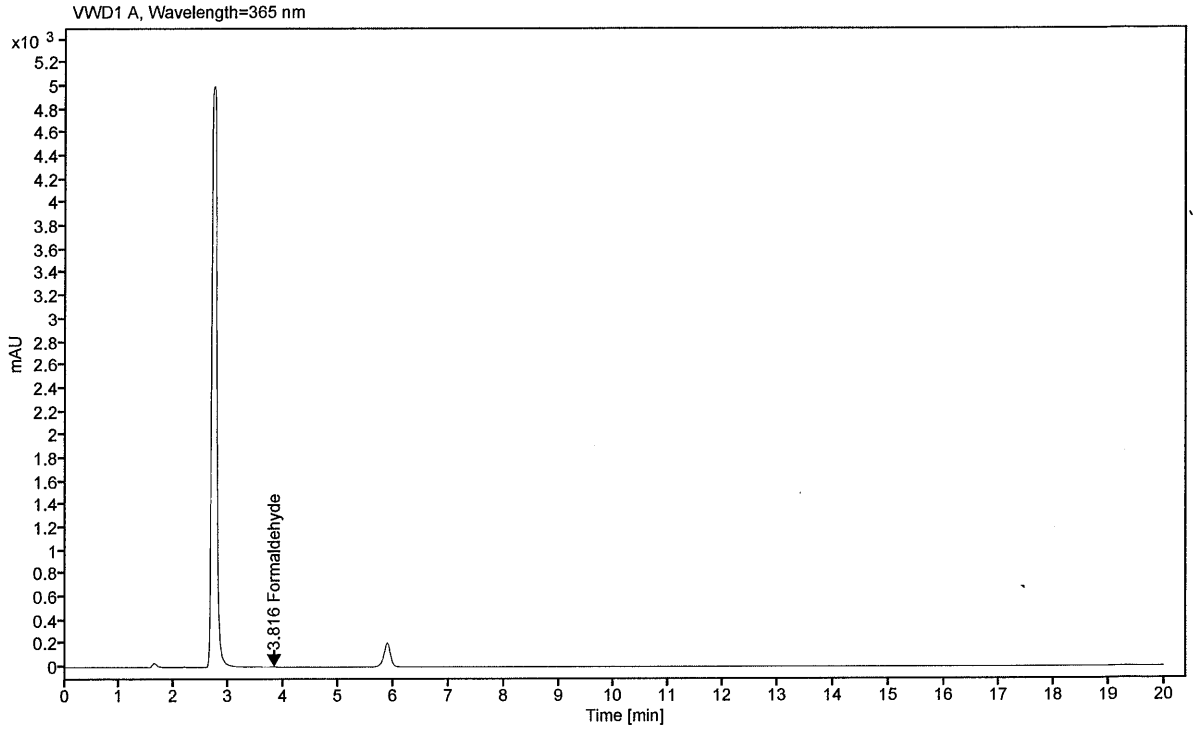


| Name | RT [min] | Area | Height | RF | Amount (ug/mL) |
|---|---|---|---|---|---|
| Formaldehyde | 3.816 | 16.2252 | 2.9466 | 0.00149 | 0.0242 |
| Acetaldehyde | | | | | 0.0000 |
| Acrolein | | | | | 0.0000 |
| Acetone | | | | | 0.0000 |
| Propionaldehyde | | | | | 0.0000 |
| Crotonaldehyde | | | | | 0.0000 |
| Methacrolein | | | | | 0.0000 |
| MEK & Butyraldehyde | | | | | 0.0000 |
| Benzaldehyde | | | | | 0.0000 |
| Valderaldehyde | | | | | 0.0000 |
| m-Tolualdehyde | | | | | 0.0000 |
| Hexaldehyde | | | | | 0.0000 |

Agilent

**Data file:** C:\Users\Public\Documents\ChemStation\1\Data\2023\061423_EPA323M 2023-06-14 14-32-52\007-231051-45090.D

**Sample name:** 231051-45090

**Analysis method:** 011723TO11Calibration.M

**Sample Vial Number** 7

**Dilution** 1 **Injection date:** 06/14/2023 16:54:04

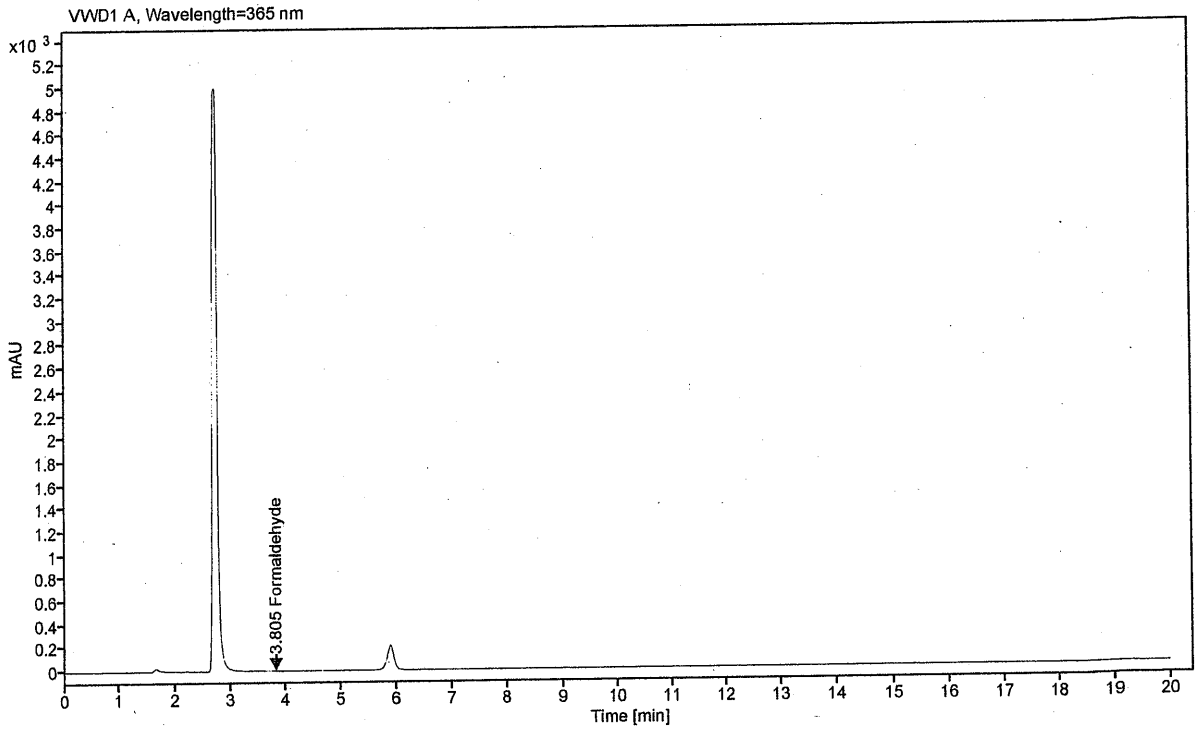


| Name | RT [min] | Area | Height | RF | Amount (ug/mL) |
|---|---|---|---|---|---|
| Formaldehyde | 3.805 | 16.9247 | 2.9521 | 0.00149 | 0.0253 |
| Acetaldehyde | | | | | 0.0000 |
| Acrolein | | | | | 0.0000 |
| Acetone | | | | | 0.0000 |
| Propionaldehyde | | | | | 0.0000 |
| Crotonaldehyde | | | | | 0.0000 |
| Methacrolein | | | | | 0.0000 |
| MEK & Butyraldehyde | | | | | 0.0000 |
| Benzaldehyde | | | | | 0.0000 |
| Valderaldehyde | | | | | 0.0000 |
| m-Tolualdehyde | | | | | 0.0000 |
| Hexaldehyde | | | | | 0.0000 |



6/15/23

**Data file:** C:\Users\Public\Documents\ChemStation\1\Data\2023\061423_EPA323M 2023-06-14 14-32-52\024-231051-45091.D

**Sample name:** 231051-45091

**Analysis method:** 011723TO11Calibration.M

**Sample Vial Number** 24

**Dilution** 1 **Injection date:** 06/14/2023 23:31:26

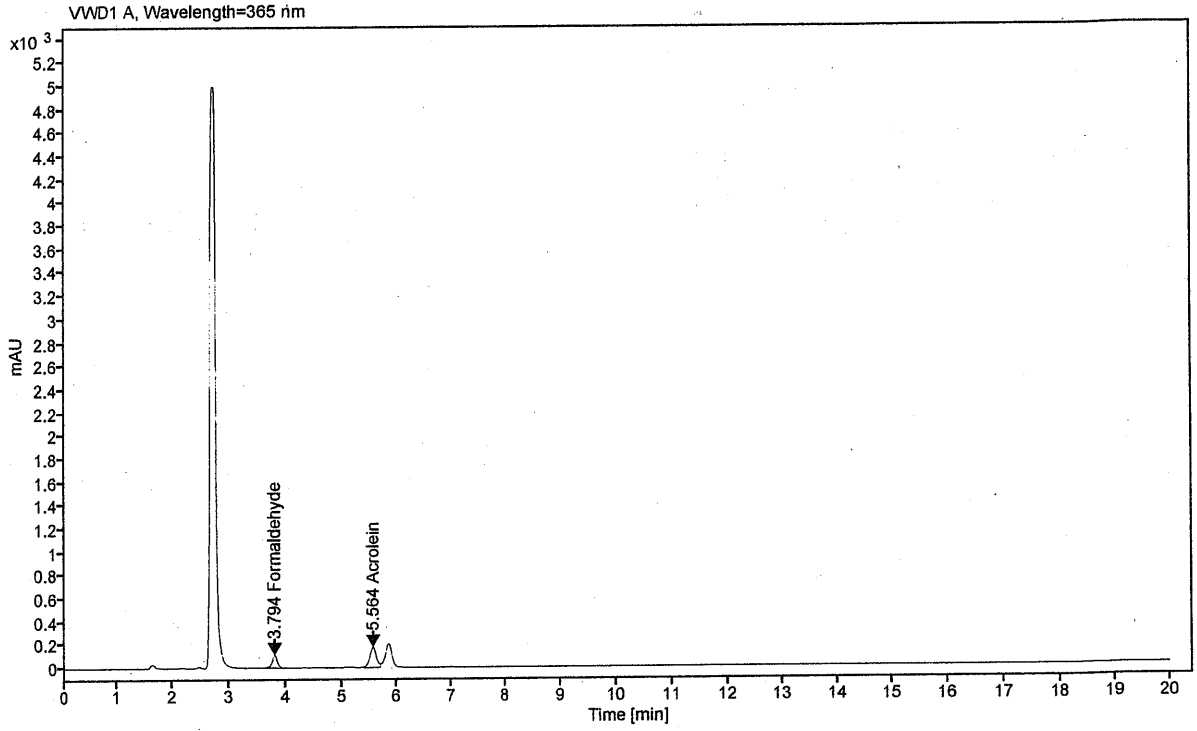


| Name | RT [min] | Area | Height | RF | Amount (ug/mL) |
|---|---|---|---|---|---|
| Formaldehyde | 3.794 | 685.8569 | 110.6023 | 0.00149 | 1.0249 |
| Acetaldehyde | | | | | 0.0000 |
| Acrolein | 5.564 | 1483.3748 | 176.1876 | 0.00184 | 2.7238 |
| Acetone | | | | | 0.0000 |
| Propionaldehyde | | | | | 0.0000 |
| Crotonaldehyde | | | | | 0.0000 |
| Methacrolein | | | | | 0.0000 |
| MEK & Butyraldehyde | | | | | 0.0000 |
| Benzaldehyde | | | | | 0.0000 |
| Valderaldehyde | | | | | 0.0000 |
| m-Tolualdehyde | | | | | 0.0000 |
| Hexaldehyde | | | | | 0.0000 |

**Data file:** C:\Users\Public\Documents\ChemStation\1\Data\2023\061423_EPA323M 2023-06-14 14-32-52\026-231051-45092.D

**Sample name:** 231051-45092

**Analysis method:** 011723TO11Calibration.M

**Sample Vial Number** 26

**Dilution** 1 **Injection date:** 06/15/2023 00:18:12

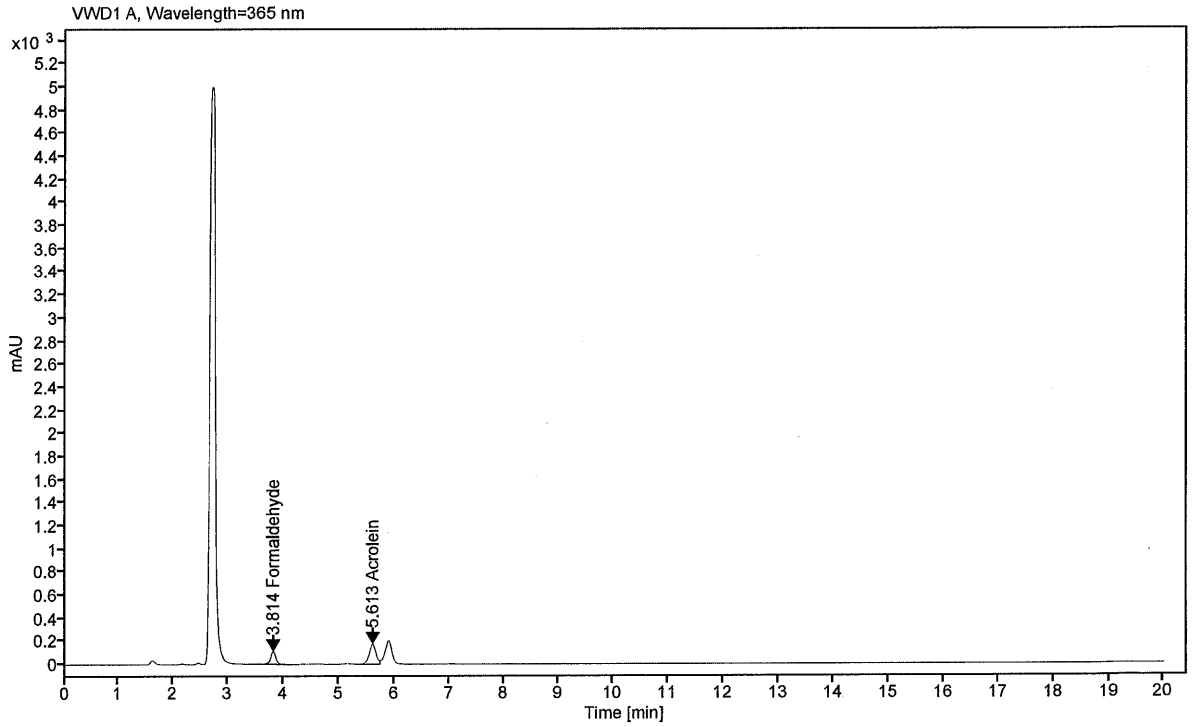


| Name | RT [min] | Area | Height | RF | Amount (ug/mL) |
|---|---|---|---|---|---|
| Formaldehyde | 3.814 | 682.7960 | 109.8768 | 0.00149 | 1.0203 |
| Acetaldehyde | | | | | 0.0000 |
| Acrolein | 5.613 | 1464.4832 | 171.1317 | 0.00184 | 2.6891 |
| Acetone | | | | | 0.0000 |
| Propionaldehyde | | | | | 0.0000 |
| Crotonaldehyde | | | | | 0.0000 |
| Methacrolein | | | | | 0.0000 |
| MEK & Butyraldehyde | | | | | 0.0000 |
| Benzaldehyde | | | | | 0.0000 |
| Valderaldehyde | | | | | 0.0000 |
| m-Tolualdehyde | | | | | 0.0000 |
| Hexaldehyde | | | | | 0.0000 |

Page 22

6/15/23

**Data file:** C:\Users\Public\Documents\ChemStation\1\Data\2023\061423_EPA323M 2023-06-14 14-32-52\027-Trip Spike x100.D

**Sample name:** Trip Spike x100

**Analysis method:** 011723TO11Calibration.M

**Sample Vial Number** 27

**Dilution** 1 **Injection date:** 06/15/2023 00:41:33

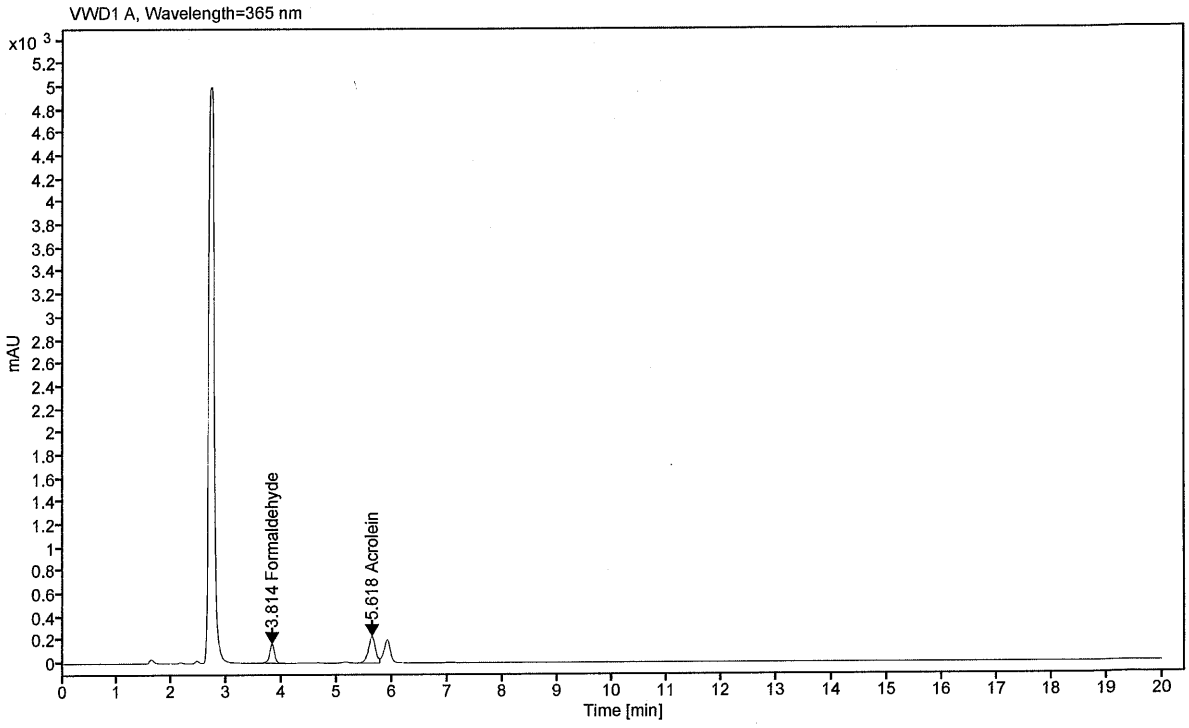


| Name | RT [min] | Area | Height | RF | Amount (ug/mL) |
|---|---|---|---|---|---|
| Formaldehyde | 3.814 | 1030.3276 | 164.9191 | 0.00149 | 1.5396 |
| Acetaldehyde | | | | | 0.0000 |
| Acrolein | 5.618 | 1959.1724 | 229.5140 | 0.00184 | 3.5974 |
| Acetone | | | | | 0.0000 |
| Propionaldehyde | | | | | 0.0000 |
| Crotonaldehyde | | | | | 0.0000 |
| Methacrolein | | | | | 0.0000 |
| MEK & Butyraldehyde | | | | | 0.0000 |
| Benzaldehyde | | | | | 0.0000 |
| Valderaldehyde | | | | | 0.0000 |
| m-Tolualdehyde | | | | | 0.0000 |
| Hexaldehyde | | | | | 0.0000 |

**Data file:** C:\Users\Public\Documents\ChemStation\1\Data\2023\061423_EPA323M 2023-06-14 14-32-52\028-Lab Spike 1.D

**Sample name:** Lab Spike ~~X~~ 100

**Analysis method:** 011723TO11Calibration.M

**Sample Vial Number** 28

**Dilution** 1 **Injection date:** 06/15/2023 01:04:56

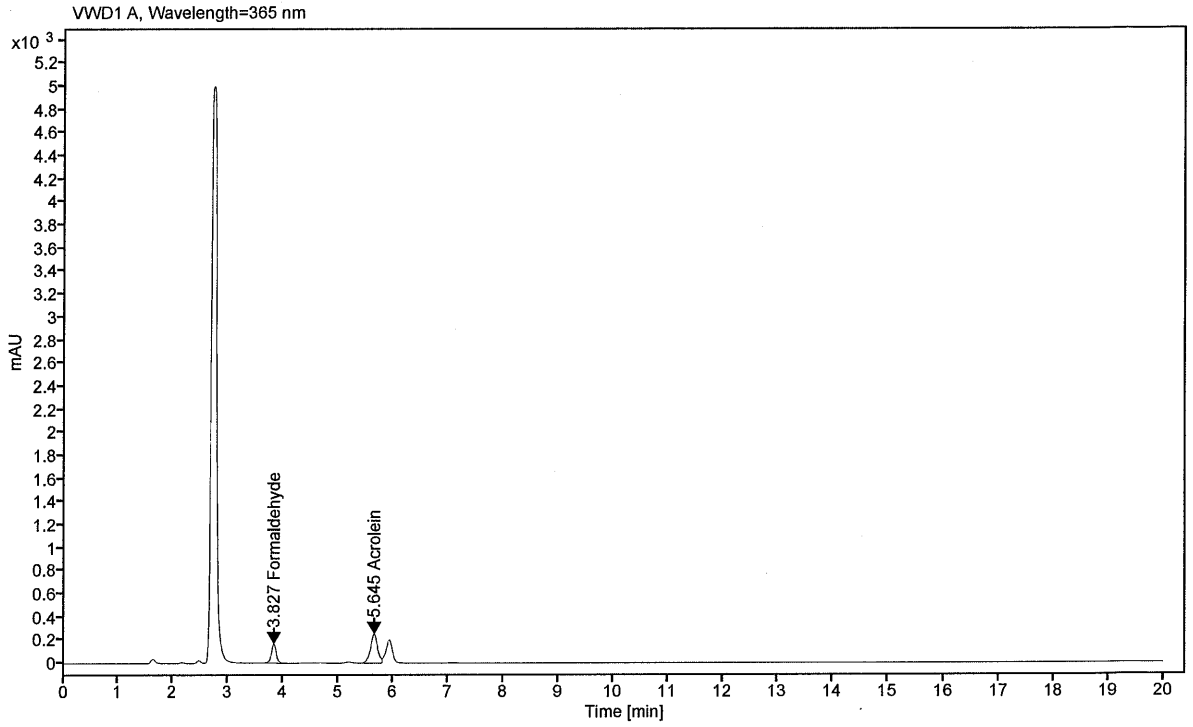


| Name | RT [min] | Area | Height | RF | Amount (ug/mL) |
|---|---|---|---|---|---|
| Formaldehyde | 3.827 | 1017.5208 | 165.4534 | 0.00149 | 1.5205 |
| Acetaldehyde | | | | | 0.0000 |
| Acrolein | 5.645 | 2163.1025 | 250.3761 | 0.00184 | 3.9719 |
| Acetone | | | | | 0.0000 |
| Propionaldehyde | | | | | 0.0000 |
| Crotonaldehyde | | | | | 0.0000 |
| Methacrolein | | | | | 0.0000 |
| MEK & Butyraldehyde | | | | | 0.0000 |
| Benzaldehyde | | | | | 0.0000 |
| Valderaldehyde | | | | | 0.0000 |
| m-Tolualdehyde | | | | | 0.0000 |
| Hexaldehyde | | | | | 0.0000 |

Page 24

6/15/23

| Line# | Location | Sample Name | DataFile | Injection Acquired Date |
|---|---|---|---|---|
| 1 | 1 | ACN Blank | 001-ACN Blank.D | 06/14/2023 14:33:52 |
| 2 | 2 | CCV 2.5 ug/mL (LC1-040423-01) | 002-CCV 2.5 ug_mL (LC1-040423-01).D | 06/14/2023 14:57:17 |
| 3 | 3 | SS 2.5 ug/mL (LC1-110722-01) | 003-SS 2.5 ug_mL (LC1-110722-01).D | 06/14/2023 15:20:37 |
| 4 | 4 | Method Blank 06/14/2023 | 004-Method Blank 06_14_2023.D | 06/14/2023 15:43:57 |
| 5 | 5 | LCS 1 1.25 ug/mL (LC1-012423-02) | 005-LCS 1 1.25 ug_mL (LC1-012423-02).D | 06/14/2023 16:07:21 |
| 6 | 6 | LCSD 1 1.25 ug/mL (LC1-012423-02) | 006-LCSD 1 1.25 ug_mL (LC1-012423-02).D | 06/14/2023 16:30:42 |
| 7 | 7 | 231051-45090 | 007-231051-45090.D | 06/14/2023 16:54:04 |
| 8 | 8 | 231051-45090 dp | 008-231051-45090 dp.D | 06/14/2023 17:17:25 |
| 9 | 9 | 231051-45082 | 009-231051-45082.D | 06/14/2023 17:40:46 |
| 10 | 10 | MS 1.25ug/mL (LC1-012423) 231051-45082 | 010-MS 1.25ug_mL (LC1-012423) 231051-450.D | 06/14/2023 18:04:10 |
| 11 | 11 | MSD 1.25ug/mL (LC1-012423) 231051-45082 | 011-MSD 1.25ug_mL (LC1-012423) 231051-45.D | 06/14/2023 18:27:36 |
| 12 | 12 | CCV 2.5 ug/mL (LC1-040423-01) | 012-CCV 2.5 ug_mL (LC1-040423-01).D | 06/14/2023 18:50:59 |
| 13 | 13 | ACN Blank | 013-ACN Blank.D | 06/14/2023 19:14:23 |
| 14 | 14 | 231051-45083 | 014-231051-45083.D | 06/14/2023 19:37:44 |
| 15 | 15 | 231051-45083 dp | 015-231051-45083 dp.D | 06/14/2023 20:01:06 |
| 16 | 16 | 231051-45084 | 016-231051-45084.D | 06/14/2023 20:24:28 |
| 17 | 17 | 231051-45085 | 017-231051-45085.D | 06/14/2023 20:47:50 |
| 18 | 18 | 231051-45086 | 018-231051-45086.D | 06/14/2023 21:11:12 |
| 19 | 19 | 231051-45087 | 019-231051-45087.D | 06/14/2023 21:34:35 |
| 20 | 20 | 231051-45088 | 020-231051-45088.D | 06/14/2023 21:58:00 |
| 21 | 21 | 231051-45089 | 021-231051-45089.D | 06/14/2023 22:21:23 |
| 22 | 22 | CCV 2.5 ug/mL (LC1-040423-01) | 022-CCV 2.5 ug_mL (LC1-040423-01).D | 06/14/2023 22:44:44 |
| 23 | 23 | ACN Blank | 023-ACN Blank.D | 06/14/2023 23:08:05 |
| 24 | 24 | 231051-45091 | 024-231051-45091.D | 06/14/2023 23:31:26 |
| 25 | 25 | 231051-45091 dp | 025-231051-45091 dp.D | 06/14/2023 23:54:49 |
| 26 | 26 | 231051-45092 | 026-231051-45092.D | 06/15/2023 00:18:12 |
| 27 | 27 | Trip Spike x100 | 027-Trip Spike x100.D | 06/15/2023 00:41:33 |
| 28 | 28 | Lab Spike 1 | 028-Lab Spike 1.D | 06/15/2023 01:04:56 |
| 29 | 29 | ACN Blank | 029-ACN Blank.D | 06/15/2023 01:28:17 |
| 30 | 30 | CCV 2.5 ug/mL (LC1-040423-01) | 030-CCV 2.5 ug_mL (LC1-040423-01).D | 06/15/2023 01:51:40 |

# Appendix C.5
# EPA Method TO-15/8260B Analyses

Enthalpy Analytical
931 West Barkley Ave
Orange, CA 92868
(714) 771-6900

enthalpy.com

Lab Job Number: 486080
Report Level: II
Report Date: 06/15/2023

**Analytical Report** *prepared for:*

Sebastian Wolfendale
Montrose Air Quality Services, LLC
13585 NE Whitaker Way
Portland, OR 97230

Location: ODEQ ACI / ACI Stack PROJ-021372

*Authorized for release by:*

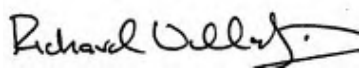

Richard Villafania, Project Manager
richard.villafania@enthalpy.com

This data package has been reviewed for technical correctness and completeness. Release of this data has been authorized by the Laboratory Manager or the Manager's designee, as verified by the above signature which applies to this PDF file as well as any associated electronic data deliverable files. The results contained in this report meet all requirements of NELAP and pertain only to those samples which were submitted for analysis. This report may be reproduced only in its entirety.

CA ELAP# 1338, NELAP# 4038, SCAQMD LAP# 18LA0518, LACSD ID# 10105

ENTHALPY ANALYTICAL

## Sample Summary

| | | |
|---|---|---|
| Sebastian Wolfendale<br>Montrose Air Quality Services, LLC<br>13585 NE Whitaker Way<br>Portland, OR 97230 | Lab Job #:<br>Location:<br>Date Received: | 486080<br>ODEQ ACI / ACI Stack PROJ-021372<br>06/01/23 |

| Sample ID | Lab ID | Collected | Matrix |
|---|---|---|---|
| R-1-CAN | 486080-001 | 05/24/23 17:18 | Air |
| R-1-VIAL | 486080-002 | 05/24/23 17:18 | Water |
| R-2-CAN | 486080-003 | 05/25/23 11:52 | Air |
| R-2-VIAL | 486080-004 | 05/25/23 11:52 | Water |
| R-3-CAN | 486080-005 | 05/25/23 16:05 | Air |
| R-3-VIAL | 486080-006 | 05/25/23 16:05 | Water |
| R-BLANK | 486080-007 | 05/25/23 12:00 | Water |
| TRAVEL BLANK | 486080-008 | 05/25/23 00:00 | Water |

ENTHALPY ANALYTICAL

# Case Narrative

| | |
|---|---|
| Montrose Air Quality Services, LLC<br>13585 NE Whitaker Way<br>Portland, OR 97230<br>Sebastian Wolfendale | Lab Job Number: 486080<br>Location: ODEQ ACI / ACI Stack PROJ-021372<br>Date Received: 06/01/23 |

This data package contains sample and QC results for four water samples and three air samples, requested for the above referenced project on 06/01/23. The samples were received intact and cold where applicable.

**Volatile Organics by GC/MS (EPA 8260B):**
No analytical problems were encountered.

**Volatile Organics in Air by MS (EPA TO-15):**

- R-1-CAN (lab # 486080-001), R-2-CAN (lab # 486080-003), and R-3-CAN (lab # 486080-005) were diluted due to high non-target analytes.
- No other analytical problems were encountered.

MONTROSE
AIR QUALITY SERVICES

# CHAIN OF CUSTODY

Shipment 1 of 2

**Portland Location**
13585 NE Whitaker Way
Portland, OR 97230
Phone (503) 255-5050 | Fax (503) 255-0505

484080

**Lab info:**

Enthalpy
931 W. Barkley Ave
Orange, CA 92868

| | | |
|---|---|---|
| **Client / Project:** ODEQ ACI | **Project / Sample Location:** ACI Stack | **Test / Analytical Method:** TO-15 / 8260B VOCs |
| **Project No.:** PROJ-021372 | **Purchase Order No:** QUOTE: Montrose_051223A_SW | **Special Analysis / Detection Limit / Reporting Instructions:** |
| **Send Analytical Report To:** Portland QA/QC: PortlandQA-QC@montrose-env.com sewolfendale@montrose-env.com | **Sampler or PM Signature:** | TO-15: Vinyl Acetate, Trichloroethene 8260B: Vinyl Acetate, Trichloroethene |

| Run / Sample No. | Date | Time | Containers | Sample Fraction | Reagent | Lab / Sample ID No. |
|---|---|---|---|---|---|---|
| R-1-CAN | 5/24/23 | 1418-1718 | 1 | canister | canister | |
| R-1-VIAL | 5/24/23 | 1418-1718 | 1 | vial | condensate | |
| R-2-CAN | 5/25/23 | 0852-1152 | 1 | canister | canister | |
| R-2-VIAL | 5/25/23 | 0852-1152 | 1 | vial | condensate | |
| R-3-CAN | 5/25/23 | 1305-1605 | 1 | canister | canister | |
| R-3-VIAL | 5/25/23 | 1305-1605 | 1 | vial | condensate | |
| R-BLANK | 5/25/23 | 1200 | 1 | vial | condensate | |
| | | | | | | |
| | | | | | | |
| | | | | | | |
| | | | | | | |
| | | | | | | |
| | | | | | | |
| | | | | | | |
| | | | | | | |
| | | | | | | |
| **Total Containers** | | | ~~6~~ 7 | | | |

| | | | | | | | |
|---|---|---|---|---|---|---|---|
| Relinquished by | Date 5/31/23 | Time 1500 | Received by | Date | Time | Temp. | |
| Relinquished by | Date | Time | Received by JUN 01 2023 | Date | Time 1000 | Temp. | |
| Relinquished by | Date | Time | Received by | Date | Time | Temp. | |

TB not on CoC

TO-15 CoC canisters.xlsx



324 of 489
W006AS-021372-RT-2857

ENTHALPY ANALYTICAL

# SAMPLE ACCEPTANCE CHECKLIST

**Section 1**

Client: Montrose Air Quality Services  Project: ODEQ ACI

Date Received: ~~5/31/23~~ JUN 01 2023  Sampler's Name Present: ☑ Yes ☐ No

**Section 2**

Sample(s) received in a cooler? ☑ Yes, How many? 1  ☐ No (skip section 2)  Sample Temp (°C) (No Cooler): _____

Sample Temp (°C), One from each cooler: #1: 3.9 #2: _____ #3: _____ #4: _____

*(Acceptance range is < 6°C but not frozen (for Microbiology samples, acceptance range is < 10°C but not frozen). It is acceptable for samples collected the same day as sample receipt to have a higher temperature as long as there is evidence that cooling has begun.)*

Shipping Information: _____

**Section 3**

Was the cooler packed with: ☐ Ice ☑ Ice Packs ☐ Bubble Wrap ☐ Styrofoam ☐ Paper ☐ None ☐ Other _____

Cooler Temp (°C): #1: 3.0 #2: _____ #3: _____ #4: _____

| Section 4 | YES | NO | N/A |
|---|---|---|---|
| Was a COC received? | ✔ | | |
| Are sample IDs present? | ✔ | | |
| Are sampling dates & times present? | ✔ | | |
| Is a relinquished signature present? | ✔ | | |
| Are the tests required clearly indicated on the COC? | ✔ | | |
| Are custody seals present? | | ✔ | |
| If custody seals are present, were they intact? | | | ✔ |
| Are all samples sealed in plastic bags? (Recommended for Microbiology samples) | ✔ | | |
| Did all samples arrive intact? If no, indicate in Section 4 below. | ✔ | | |
| Did all bottle labels agree with COC? (ID, dates and times) | ✔ | | |
| Were the samples collected in the correct containers for the required tests? | ✔ | | |
| Are the containers labeled with the correct preservatives? | ✔ | | |
| Is there headspace in the VOA vials greater than 5-6 mm in diameter? | ✔ | | |
| Was a sufficient amount of sample submitted for the requested tests? | ✔ | | |

**Section 5** Explanations/Comments

R-1-VIAL was received with headspace. R-3-VIAL was received with headspace. Travel Blanks received but not listed on the COC.

**Section 6**

For discrepancies, how was the Project Manager notified? ☐ Verbal PM Initials: _____ Date/Time _____

☐ Email (email sent to/on): _____ / _____

Project Manager's response:

Completed By: _____ Date: JUN 01 2023

Enthalpy Analytical, a subsidiary of Montrose Environmental Group ,Inc.
931 W. Barkley Ave, Orange, CA 92868 • T: (714) 771-6900 • F: (714) 538-1209
www.enthalpy.com/socal

ORIGIN ID:PDXA (425) 802-0794
SEBASTIAN WOLFENDALE
MONTROSE AIR QUALITY SERVICES
13585 N.E. WHITAKER WAY

PORTLAND, OR 97230
UNITED STATES US

SHIP DATE: 31MAY23
ACTWGT: 6.00 LB
CAD: 3079440/INET4610
DIMS: 9x9x13 IN

BILL SENDER

TO **SAMPLE RECEIVING**
**ENTHALPY ANALYTICAL**
**931 W BARKLEY AVE**

**ORANGE CA 92868**
(714) 771-6900 REF: PROJ-021372
INV:
PO: DEPT:

583.02/29ABFE2D

FedEx Express

**THU - 01 JUN 10:30A**
**PRIORITY OVERNIGHT**

3 of 3
MPS# 0263 **7723 0870 1621**
**Mstr# 7723 0870 1882**
0201

**92868**
**SNA**
CA-US

**WZ APVA**

**After printing this label**:
1. Use the 'Print' button on this page to print your label to your laser or inkjet printer.
2. Fold the printed page along the horizontal line.
3. Place label in shipping pouch and affix it to your shipment so that the barcode portion of the label can be read and scanned.

**Warning**: Use only the printed original label for shipping. Using a photocopy of this label for shipping purposes is fraudulent and could result in additional billing charges, along with the cancellation of your FedEx account number.

Use of this system constitutes your agreement to the service conditions in the current FedEx Service Guide, available on fedex.com. FedEx will not be responsible for any claim in excess of $100 per package, whether the result of loss, damage, delay, non-delivery, misdelivery, or misinformation, unless you declare a higher value, pay an additional charge, document your actual loss and file a timely claim. Limitations found in the current FedEx Service Guide apply. Your right to recover from FedEx for any loss, including intrinsic value of the package, loss of sales, income interest, profit, attorney's fees, costs, and other forms of damage whether direct, incidental, consequential, or special is limited to the greater of $100 or the authorized declared value. Recovery cannot exceed actual documented loss. Maximum for items of extraordinary value is $1,000, e.g. jewelry, precious metals, negotiable instruments and other items listed in our ServiceGuide. Written claims must be filed within strict time limits, see current FedEx Service Guide.

ORIGIN ID:PDXA (425) 802-0794
SEBASTIAN WOLFENDALE
MONTROSE AIR QUALITY SERVICES
13585 N.E. WHITAKER WAY

PORTLAND, OR 97230
UNITED STATES US

SHIP DATE: 31MAY23
ACTWGT: 35.00 LB
CAD: 3079440/INET4610
DIMS: 20x20x16 IN

BILL SENDER

TO **SAMPLE RECEIVING**
**ENTHALPY ANALYTICAL**
**931 W BARKLEY AVE**

**ORANGE CA 92868**
(714) 771-6900 REF: PROJ-021372
INV:
PO: DEPT:

503J2/29AB/FE2D

FedEx Express

E

J2220230405 01uv

2 of 3

**THU - 01 JUN 10:30A**
**PRIORITY OVERNIGHT**

MPS# 0263 **7723 0870 2113**
**Mstr# 7723 0870 1882** 0201

**WZ APVA**

**92868**
CA-US **SNA**

**After printing this label:**
1. Use the 'Print' button on this page to print your label to your laser or inkjet printer.
2. Fold the printed page along the horizontal line.
3. Place label in shipping pouch and affix it to your shipment so that the barcode portion of the label can be read and scanned.

**Warning**: Use only the printed original label for shipping. Using a photocopy of this label for shipping purposes is fraudulent and could result in additional billing charges, along with the cancellation of your FedEx account number.

Use of this system constitutes your agreement to the service conditions in the current FedEx Service Guide, available on fedex.com.FedEx will not be responsible for any claim in excess of $100 per package, whether the result of loss, damage, delay, non-delivery,misdelivery,or misinformation, unless you declare a higher value, pay an additional charge, document your actual loss and file a timely claim.Limitations found in the current FedEx Service Guide apply. Your right to recover from FedEx for any loss, including intrinsic value of the package, loss of sales, income interest, profit, attorney's fees, costs, and other forms of damage whether direct, incidental,consequential, or special is limited to the greater of $100 or the authorized declared value. Recovery cannot exceed actual documented loss.Maximum for items of extraordinary value is $1,000, e.g. jewelry, precious metals, negotiable instruments and other items listed in our ServiceGuide. Written claims must be filed within strict time limits, see current FedEx Service Guide.

ORIGIN ID:PDXA (425) 802-0794
SEBASTIAN WOLFENDALE
MONTROSE AIR QUALITY SERVICES
13585 N.E. WHITAKER WAY

PORTLAND, OR 97230
UNITED STATES US

SHIP DATE: 31MAY23
ACTWGT: 7.00 LB
CAD: 3079440/INET4610
DIMS: 12x9x11 IN

BILL SENDER

TO **SAMPLE RECEIVING**
**ENTHALPY ANALYTICAL**
**931 W BARKLEY AVE**

**ORANGE CA 92868**
(714) 771-6900 REF: PROJ-021372
INV:
PO: DEPT:

583J/23/9ABA/FE2D

FedEx Express

1 of 3

TRK# 0201 **7723 0870 1882**

**## MASTER ##**

**WZ APVA**

**THU - 01 JUN 10:30A**
**PRIORITY OVERNIGHT**

**92868**
CA-US **SNA**

**After printing this label**:
1. Use the 'Print' button on this page to print your label to your laser or inkjet printer.
2. Fold the printed page along the horizontal line.
3. Place label in shipping pouch and affix it to your shipment so that the barcode portion of the label can be read and scanned.

**Warning**: Use only the printed original label for shipping. Using a photocopy of this label for shipping purposes is fraudulent and could result in additional billing charges, along with the cancellation of your FedEx account number.
Use of this system constitutes your agreement to the service conditions in the current FedEx Service Guide, available on fedex.com.FedEx will not be responsible for any claim in excess of $100 per package, whether the result of loss, damage, delay, non-delivery,misdelivery,or misinformation, unless you declare a higher value, pay an additional charge, document your actual loss and file a timely claim.Limitations found in the current FedEx Service Guide apply. Your right to recover from FedEx for any loss, including intrinsic value of the package, loss of sales, income interest, profit, attorney's fees, costs, and other forms of damage whether direct, incidental,consequential, or special is limited to the greater of $100 or the authorized declared value. Recovery cannot exceed actual documented loss.Maximum for items of extraordinary value is $1,000, e.g. jewelry, precious metals, negotiable instruments and other items listed in our ServiceGuide. Written claims must be filed within strict time limits, see current FedEx Service Guide.

37/50
ice pack

ENTHALPY ANALYTICAL

# Analysis Results for 486080

Sebastian Wolfendale
Montrose Air Quality Services, LLC
13585 NE Whitaker Way
Portland, OR 97230

Lab Job #: 486080
Location: ODEQ ACI / ACI Stack PROJ-021372
Date Received: 06/01/23

**Sample ID: R-1-CAN** **Lab ID: 486080-001** **Collected: 05/24/23 17:18**
**Matrix: Air**

| 486080-001 Analyte | Result | Qual | Units | RL | DF | Batch | Prepared | Analyzed | Chemist |
|---|---|---|---|---|---|---|---|---|---|
| Method: EPA TO-15<br>Prep Method: METHOD | | | | | | | | | |
| Vinyl Acetate | ND | | ppbv | 10 | 10 | 315930 | 06/13/23 14:20 | 06/13/23 14:20 | ZNZ |
| Vinyl Acetate | ND | | ug/m3 | 35 | 10 | 315930 | 06/13/23 14:20 | 06/13/23 14:20 | ZNZ |
| Trichloroethene | ND | | ppbv | 2.0 | 10 | 315930 | 06/13/23 14:20 | 06/13/23 14:20 | ZNZ |
| Trichloroethene | ND | | ug/m3 | 11 | 10 | 315930 | 06/13/23 14:20 | 06/13/23 14:20 | ZNZ |
| **Surrogates** | | | | **Limits** | | | | | |
| Bromofluorobenzene | 97% | | %REC | 60-140 | 10 | 315930 | 06/13/23 14:20 | 06/13/23 14:20 | ZNZ |

**Sample ID: R-1-VIAL** **Lab ID: 486080-002** **Collected: 05/24/23 17:18**
**Matrix: Water**

| 486080-002 Analyte | Result | Qual | Units | RL | DF | Batch | Prepared | Analyzed | Chemist |
|---|---|---|---|---|---|---|---|---|---|
| Method: EPA 8260B<br>Prep Method: EPA 5030B | | | | | | | | | |
| Vinyl Acetate | ND | | ug/L | 50 | 1 | 315562 | 06/06/23 | 06/06/23 | LYZ |
| Trichloroethene | ND | | ug/L | 0.5 | 1 | 315562 | 06/06/23 | 06/06/23 | LYZ |
| **Surrogates** | | | | **Limits** | | | | | |
| Dibromofluoromethane | 109% | | %REC | 70-130 | 1 | 315562 | 06/06/23 | 06/06/23 | LYZ |
| 1,2-Dichloroethane-d4 | 104% | | %REC | 70-130 | 1 | 315562 | 06/06/23 | 06/06/23 | LYZ |
| Toluene-d8 | 94% | | %REC | 70-130 | 1 | 315562 | 06/06/23 | 06/06/23 | LYZ |
| Bromofluorobenzene | 100% | | %REC | 70-130 | 1 | 315562 | 06/06/23 | 06/06/23 | LYZ |

**Sample ID: R-2-CAN** **Lab ID: 486080-003** **Collected: 05/25/23 11:52**
**Matrix: Air**

| 486080-003 Analyte | Result | Qual | Units | RL | DF | Batch | Prepared | Analyzed | Chemist |
|---|---|---|---|---|---|---|---|---|---|
| Method: EPA TO-15<br>Prep Method: METHOD | | | | | | | | | |
| Vinyl Acetate | ND | | ppbv | 4.0 | 4 | 316017 | 06/13/23 22:03 | 06/13/23 22:03 | ZNZ |
| Vinyl Acetate | ND | | ug/m3 | 14 | 4 | 316017 | 06/13/23 22:03 | 06/13/23 22:03 | ZNZ |
| Trichloroethene | ND | | ppbv | 0.80 | 4 | 316017 | 06/13/23 22:03 | 06/13/23 22:03 | ZNZ |
| Trichloroethene | ND | | ug/m3 | 4.3 | 4 | 316017 | 06/13/23 22:03 | 06/13/23 22:03 | ZNZ |
| **Surrogates** | | | | **Limits** | | | | | |
| Bromofluorobenzene | 106% | | %REC | 60-140 | 4 | 316017 | 06/13/23 22:03 | 06/13/23 22:03 | ZNZ |



Results for any subcontracted analyses are not included in this section.

ENTHALPY ANALYTICAL

# Analysis Results for 486080

| Sample ID: R-2-VIAL | Lab ID: 486080-004 | Collected: 05/25/23 11:52 |
|---|---|---|
| | Matrix: Water | |

| 486080-004 Analyte | Result | Qual | Units | RL | DF | Batch | Prepared | Analyzed | Chemist |
|---|---|---|---|---|---|---|---|---|---|
| Method: EPA 8260B<br>Prep Method: EPA 5030B | | | | | | | | | |
| Vinyl Acetate | ND | | ug/L | 50 | 1 | 315562 | 06/07/23 | 06/07/23 | LYZ |
| Trichloroethene | ND | | ug/L | 0.5 | 1 | 315562 | 06/07/23 | 06/07/23 | LYZ |
| **Surrogates** | | | | **Limits** | | | | | |
| Dibromofluoromethane | 99% | | %REC | 70-130 | 1 | 315562 | 06/07/23 | 06/07/23 | LYZ |
| 1,2-Dichloroethane-d4 | 100% | | %REC | 70-130 | 1 | 315562 | 06/07/23 | 06/07/23 | LYZ |
| Toluene-d8 | 99% | | %REC | 70-130 | 1 | 315562 | 06/07/23 | 06/07/23 | LYZ |
| Bromofluorobenzene | 100% | | %REC | 70-130 | 1 | 315562 | 06/07/23 | 06/07/23 | LYZ |

| Sample ID: R-3-CAN | Lab ID: 486080-005 | Collected: 05/25/23 16:05 |
|---|---|---|
| | Matrix: Air | |

| 486080-005 Analyte | Result | Qual | Units | RL | DF | Batch | Prepared | Analyzed | Chemist |
|---|---|---|---|---|---|---|---|---|---|
| Method: EPA TO-15<br>Prep Method: METHOD | | | | | | | | | |
| Vinyl Acetate | ND | | ppbv | 4.8 | 4.8 | 316017 | 06/13/23 22:47 | 06/13/23 22:47 | ZNZ |
| Vinyl Acetate | ND | | ug/m3 | 17 | 4.8 | 316017 | 06/13/23 22:47 | 06/13/23 22:47 | ZNZ |
| Trichloroethene | ND | | ppbv | 0.96 | 4.8 | 316017 | 06/13/23 22:47 | 06/13/23 22:47 | ZNZ |
| Trichloroethene | ND | | ug/m3 | 5.2 | 4.8 | 316017 | 06/13/23 22:47 | 06/13/23 22:47 | ZNZ |
| **Surrogates** | | | | **Limits** | | | | | |
| Bromofluorobenzene | 100% | | %REC | 60-140 | 4.8 | 316017 | 06/13/23 22:47 | 06/13/23 22:47 | ZNZ |

| Sample ID: R-3-VIAL | Lab ID: 486080-006 | Collected: 05/25/23 16:05 |
|---|---|---|
| | Matrix: Water | |

| 486080-006 Analyte | Result | Qual | Units | RL | DF | Batch | Prepared | Analyzed | Chemist |
|---|---|---|---|---|---|---|---|---|---|
| Method: EPA 8260B<br>Prep Method: EPA 5030B | | | | | | | | | |
| Vinyl Acetate | ND | | ug/L | 50 | 1 | 315562 | 06/07/23 | 06/07/23 | LYZ |
| Trichloroethene | ND | | ug/L | 0.5 | 1 | 315562 | 06/07/23 | 06/07/23 | LYZ |
| **Surrogates** | | | | **Limits** | | | | | |
| Dibromofluoromethane | 100% | | %REC | 70-130 | 1 | 315562 | 06/07/23 | 06/07/23 | LYZ |
| 1,2-Dichloroethane-d4 | 101% | | %REC | 70-130 | 1 | 315562 | 06/07/23 | 06/07/23 | LYZ |
| Toluene-d8 | 101% | | %REC | 70-130 | 1 | 315562 | 06/07/23 | 06/07/23 | LYZ |
| Bromofluorobenzene | 103% | | %REC | 70-130 | 1 | 315562 | 06/07/23 | 06/07/23 | LYZ |



Results for any subcontracted analyses are not included in this section.

ENTHALPY ANALYTICAL

# Analysis Results for 486080

| Sample ID: R-BLANK | Lab ID: 486080-007 | Collected: 05/25/23 12:00 |
|---|---|---|
| | Matrix: Water | |

| 486080-007 Analyte | Result | Qual | Units | RL | DF | Batch | Prepared | Analyzed | Chemist |
|---|---|---|---|---|---|---|---|---|---|
| Method: EPA 8260B<br>Prep Method: EPA 5030B | | | | | | | | | |
| Vinyl Acetate | ND | | ug/L | 50 | 1 | 315562 | 06/07/23 | 06/07/23 | LYZ |
| Trichloroethene | ND | | ug/L | 0.5 | 1 | 315562 | 06/07/23 | 06/07/23 | LYZ |
| **Surrogates** | | | | **Limits** | | | | | |
| Dibromofluoromethane | 97% | | %REC | 70-130 | 1 | 315562 | 06/07/23 | 06/07/23 | LYZ |
| 1,2-Dichloroethane-d4 | 98% | | %REC | 70-130 | 1 | 315562 | 06/07/23 | 06/07/23 | LYZ |
| Toluene-d8 | 102% | | %REC | 70-130 | 1 | 315562 | 06/07/23 | 06/07/23 | LYZ |
| Bromofluorobenzene | 103% | | %REC | 70-130 | 1 | 315562 | 06/07/23 | 06/07/23 | LYZ |

ND Not Detected



Results for any subcontracted analyses are not included in this section.

ENTHALPY ANALYTICAL

# Batch QC

| Type: Lab Control Sample | Lab ID: QC1071248 | Batch: 315562 |
|---|---|---|
| Matrix: Water | Method: EPA 8260B | Prep Method: EPA 5030B |

| QC1071248 Analyte | Result | Spiked | Units | Recovery | Qual | Limits |
|---|---|---|---|---|---|---|
| Trichloroethene | 55.43 | 50.00 | ug/L | 111% | | 70-130 |
| **Surrogates** | | | | | | |
| Dibromofluoromethane | 49.99 | 50.00 | ug/L | 100% | | 70-130 |
| 1,2-Dichloroethane-d4 | 48.46 | 50.00 | ug/L | 97% | | 70-130 |
| Toluene-d8 | 51.12 | 50.00 | ug/L | 102% | | 70-130 |
| Bromofluorobenzene | 51.18 | 50.00 | ug/L | 102% | | 70-130 |

| Type: Lab Control Sample Duplicate | Lab ID: QC1071249 | Batch: 315562 |
|---|---|---|
| Matrix: Water | Method: EPA 8260B | Prep Method: EPA 5030B |

| QC1071249 Analyte | Result | Spiked | Units | Recovery | Qual | Limits | RPD | RPD Lim |
|---|---|---|---|---|---|---|---|---|
| Trichloroethene | 51.59 | 50.00 | ug/L | 103% | | 70-130 | 7 | 30 |
| **Surrogates** | | | | | | | | |
| Dibromofluoromethane | 50.31 | 50.00 | ug/L | 101% | | 70-130 | | |
| 1,2-Dichloroethane-d4 | 47.69 | 50.00 | ug/L | 95% | | 70-130 | | |
| Toluene-d8 | 50.76 | 50.00 | ug/L | 102% | | 70-130 | | |
| Bromofluorobenzene | 50.23 | 50.00 | ug/L | 100% | | 70-130 | | |

| Type: Blank | Lab ID: QC1071252 | Batch: 315562 |
|---|---|---|
| Matrix: Water | Method: EPA 8260B | Prep Method: EPA 5030B |

| QC1071252 Analyte | Result | Qual | Units | RL | Prepared | Analyzed |
|---|---|---|---|---|---|---|
| Vinyl Acetate | ND | | ug/L | 50 | 06/06/23 | 06/06/23 |
| Trichloroethene | ND | | ug/L | 0.5 | 06/06/23 | 06/06/23 |
| **Surrogates** | | | | **Limits** | | |
| Dibromofluoromethane | 97% | | %REC | 70-130 | 06/06/23 | 06/06/23 |
| 1,2-Dichloroethane-d4 | 98% | | %REC | 70-130 | 06/06/23 | 06/06/23 |
| Toluene-d8 | 102% | | %REC | 70-130 | 06/06/23 | 06/06/23 |
| Bromofluorobenzene | 100% | | %REC | 70-130 | 06/06/23 | 06/06/23 |

| Type: Lab Control Sample | Lab ID: QC1072499 | Batch: 315930 |
|---|---|---|
| Matrix: Air | Method: EPA TO-15 | Prep Method: METHOD |

| QC1072499 Analyte | Result | Spiked | Units | Recovery | Qual | Limits |
|---|---|---|---|---|---|---|
| Vinyl Acetate | 9.721 | 10.00 | ppbv | 97% | | 70-130 |
| Trichloroethene | 9.864 | 10.00 | ppbv | 99% | | 70-130 |
| **Surrogates** | | | | | | |
| Bromofluorobenzene | 10.67 | 10.00 | ppbv | 107% | | 60-140 |

ENTHALPY ANALYTICAL

# Batch QC

| Type: Lab Control Sample Duplicate | Lab ID: QC1072500 | Batch: 315930 |
|---|---|---|
| Matrix: Air | Method: EPA TO-15 | Prep Method: METHOD |

| QC1072500 Analyte | Result | Spiked | Units | Recovery | Qual | Limits | RPD | RPD Lim |
|---|---|---|---|---|---|---|---|---|
| Vinyl Acetate | 10.09 | 10.00 | ppbv | 101% | | 70-130 | 4 | 25 |
| Trichloroethene | 10.28 | 10.00 | ppbv | 103% | | 70-130 | 4 | 25 |
| **Surrogates** | | | | | | | | |
| Bromofluorobenzene | 10.32 | 10.00 | ppbv | 103% | | 60-140 | | |

| Type: Blank | Lab ID: QC1072501 | Batch: 315930 |
|---|---|---|
| Matrix: Air | Method: EPA TO-15 | Prep Method: METHOD |

| QC1072501 Analyte | Result | Qual | Units | RL | Prepared | Analyzed |
|---|---|---|---|---|---|---|
| Vinyl Acetate | ND | | ppbv | 1.0 | 06/12/23 20:34 | 06/12/23 20:34 |
| Trichloroethene | ND | | ppbv | 0.20 | 06/12/23 20:34 | 06/12/23 20:34 |
| **Surrogates** | | | | **Limits** | | |
| Bromofluorobenzene | 97% | | %REC | 60-140 | 06/12/23 20:34 | 06/12/23 20:34 |

| Type: Lab Control Sample | Lab ID: QC1072791 | Batch: 316017 |
|---|---|---|
| Matrix: Air | Method: EPA TO-15 | Prep Method: METHOD |

| QC1072791 Analyte | Result | Spiked | Units | Recovery | Qual | Limits |
|---|---|---|---|---|---|---|
| Vinyl Acetate | 9.492 | 10.00 | ppbv | 95% | | 70-130 |
| Trichloroethene | 9.823 | 10.00 | ppbv | 98% | | 70-130 |
| **Surrogates** | | | | | | |
| Bromofluorobenzene | 10.85 | 10.00 | ppbv | 108% | | 60-140 |

| Type: Lab Control Sample Duplicate | Lab ID: QC1072792 | Batch: 316017 |
|---|---|---|
| Matrix: Air | Method: EPA TO-15 | Prep Method: METHOD |

| QC1072792 Analyte | Result | Spiked | Units | Recovery | Qual | Limits | RPD | RPD Lim |
|---|---|---|---|---|---|---|---|---|
| Vinyl Acetate | 10.01 | 10.00 | ppbv | 100% | | 70-130 | 5 | 25 |
| Trichloroethene | 10.09 | 10.00 | ppbv | 101% | | 70-130 | 3 | 25 |
| **Surrogates** | | | | | | | | |
| Bromofluorobenzene | 10.73 | 10.00 | ppbv | 107% | | 60-140 | | |

ENTHALPY ANALYTICAL

# Batch QC

| | | | | | |
|---|---|---|---|---|---|
| **Type:** | **Blank** | **Lab ID:** | **QC1072793** | **Batch:** | **316017** |
| **Matrix:** | **Air** | **Method:** | **EPA TO-15** | **Prep Method:** | **METHOD** |

| QC1072793 Analyte | Result | Qual | Units | RL | Prepared | Analyzed |
|---|---|---|---|---|---|---|
| Vinyl Acetate | ND | | ppbv | 1.0 | 06/13/23 20:30 | 06/13/23 20:30 |
| Trichloroethene | ND | | ppbv | 0.20 | 06/13/23 20:30 | 06/13/23 20:30 |
| **Surrogates** | | | | **Limits** | | |
| Bromofluorobenzene | 105% | | %REC | 60-140 | 06/13/23 20:30 | 06/13/23 20:30 |

ND Not Detected

# Atmospheric Analysis & Consulting, Inc.

| | |
|---|---|
| CLIENT | : Montrose AQS |
| PROJECT NAME | : ODEQ ACI |
| PROJECT NO. | : PROJ-021372 |
| AAC PROJECT NO. | : 231051 |
| REPORT DATE | : 06/16/2023 |

On June 2, 2023, Atmospheric Analysis & Consulting, Inc. received seven (7) 6.0-Liter Summa Canisters for Benzene and Acrolein by EPA Method TO-15. Upon receipt, the samples were assigned unique Laboratory ID numbers as follows:

| Client ID | Lab ID | Return Pressure (mmHga) |
|---|---|---|
| R-1-CAN | 231051-45075 | 503.4 |
| R-2A-CAN | 231051-45076 | 569.6 |
| R-2B-CAN | 231051-45077 | 446.2 |
| R-3A-CAN | 231051-45078 | 555.6 |
| R-3B-CAN | 231051-45079 | 311.2 |
| R-TS-CAN | 231051-45080 | 359.0 |
| R-TS-SPIKEDCAN | 231051-45081 | 266.6 |

**This analysis is accredited under the laboratory's ISO/IEC 17025:2017 accreditation issued by the ANSI National Accreditation Board. Refer to certificate and scope of accreditation AT-1908**. Test results apply to the sample(s) as received. For detailed information pertaining to specific EPA, NCASI, ASTM and SCAQMD accreditations (Methods & Analytes), please visit our website at www.aaclab.com.

I certify that this data is technically accurate, complete, and in compliance with the terms and conditions of the contract. No problems were encountered during receiving, preparation, and/or analysis of these samples.

The Technical Director or his designee, as verified by the following signature, has authorized release of the data contained in this hardcopy report.

If you have any questions or require further explanation of data results, please contact the undersigned.

Sucha Parmar, Ph.D.
Technical Director

This report consists of 11 pages.



2225 Sperry Ave., Ventura, CA 93003 www.aaclab.com • (805) 650-1642

## Laboratory Analysis Report

CLIENT : Montrose AQS
PROJECT NO : 231051
MATRIX : AIR
UNITS : PPB (v/v)

DATE RECEIVED : 06/02/2023
DATE REPORTED : 06/16/2023
ANALYST : DL/CH

### VOLATILE ORGANIC COMPOUNDS BY EPA TO-15

| *Client ID* | R-1-CAN | | | Sample Reporting Limit (SRL) (MRLxDF's) | R-2A-CAN | | | Sample Reporting Limit (SRL) (MRLxDF's) | Method Reporting Limit (MRL) |
|---|---|---|---|---|---|---|---|---|---|
| *AAC ID* | 231051-45075 | | | | 231051-45076 | | | | |
| *Date Sampled* | 05/24/2023 | | | | 05/25/2023 | | | | |
| *Date Analyzed* | 06/12/2023 | | | | 06/12/2023 | | | | |
| *Can Dilution Factor* | 2.04 | | | | 1.80 | | | | |
| *Compound* | Result | Qualifier | Analysis DF | | Result | Qualifier | Analysis DF | | |
| Acrolein | 201 | | 10 | 20.4 | 20.9 | | 10 | 18.0 | 1.00 |
| Benzene | 745 | | 10 | 10.2 | 451 | | 10 | 9.00 | 0.50 |
| BFB-Surrogate Std. % Recovery | | 97% | | | | 99% | | | 70-130% |

U - Compound was not detected at or above the SRL.

## Laboratory Analysis Report

CLIENT : Montrose AQS
PROJECT NO : 231051
MATRIX : AIR
UNITS : PPB (v/v)

DATE RECEIVED : 06/02/2023
DATE REPORTED : 06/16/2023
ANALYST : DL/CH

### VOLATILE ORGANIC COMPOUNDS BY EPA TO-15

| *Client ID* | R-2B-CAN | | | Sample Reporting Limit (SRL) | R-3A-CAN | | | Sample Reporting Limit (SRL) | Method Reporting Limit (MRL) |
|---|---|---|---|---|---|---|---|---|---|
| *AAC ID* | 231051-45077 | | | | 231051-45078 | | | | |
| *Date Sampled* | 05/25/2023 | | | | 05/25/2023 | | | | |
| *Date Analyzed* | 06/12/2023 | | | | 06/12/2023 | | | | |
| *Can Dilution Factor* | 2.29 | | | | 1.85 | | | | |
| *Compound* | Result | Qualifier | Analysis DF | (MRLxDF's) | Result | Qualifier | Analysis DF | (MRLxDF's) | |
| Acrolein | 77.0 | | 10 | 22.9 | 49.8 | | 10 | 18.5 | 1.00 |
| Benzene | 1060 | | 10 | 11.5 | 151 | | 10 | 9.23 | 0.50 |
| BFB-Surrogate Std. % Recovery | | 99% | | | | 97% | | | 70-130% |

U - Compound was not detected at or above the SRL.

## Laboratory Analysis Report

CLIENT : Montrose AQS
PROJECT NO : 231051
MATRIX : AIR
UNITS : PPB (v/v)

DATE RECEIVED : 06/02/2023
DATE REPORTED : 06/16/2023
ANALYST : DL/CH

### VOLATILE ORGANIC COMPOUNDS BY EPA TO-15

| *Client ID* | R-3B-CAN | | | Sample Reporting Limit (SRL) (MRLxDF's) | R-TS-CAN | | | Sample Reporting Limit (SRL) (MRLxDF's) | Method Reporting Limit (MRL) |
|---|---|---|---|---|---|---|---|---|---|
| *AAC ID* | 231051-45079 | | | | 231051-45080 | | | | |
| *Date Sampled* | 05/25/2023 | | | | 05/30/2023 | | | | |
| *Date Analyzed* | 06/12/2023 | | | | 06/12/2023 | | | | |
| *Can Dilution Factor* | 3.29 | | | | 2.83 | | | | |
| *Compound* | Result | Qualifier | Analysis DF | | Result | Qualifier | Analysis DF | | |
| Acrolein | 825 | | 10 | 32.9 | <SRL | U | 10 | 28.3 | 1.00 |
| Benzene | 371 | | 10 | 16.5 | <SRL | U | 10 | 14.2 | 0.50 |
| BFB-Surrogate Std. % Recovery | | 97% | | | | 93% | | | 70-130% |

U - Compound was not detected at or above the SRL.

## Laboratory Analysis Report

CLIENT : Montrose AQS
PROJECT NO : 231051
MATRIX : AIR
UNITS : PPB (v/v)

DATE RECEIVED : 06/02/2023
DATE REPORTED : 06/16/2023
ANALYST : DL/CH

### VOLATILE ORGANIC COMPOUNDS BY EPA TO-15

| *Client ID* | R-TS-SPIKEDCAN | | | Sample Reporting Limit (SRL) (MRLxDF's) | Method Reporting Limit (MRL) |
|---|---|---|---|---|---|
| *AAC ID* | 231051-45081 | | | | |
| *Date Sampled* | 05/30/2023 | | | | |
| *Date Analyzed* | 06/12/2023 | | | | |
| *Can Dilution Factor* | 3.83 | | | | |
| *Compound* | Result | Qualifier | Analysis DF | | |
| Acrolein | 32.2 | J | 10 | 38.3 | 1.00 |
| Benzene | 34.9 | | 10 | 19.2 | 0.50 |
| BFB-Surrogate Std. % Recovery | | 93% | | | 70-130% |

U - Compound was not detected at or above the SRL.
J- Compound was detected above the MDL but below the SRL.

## QUALITY CONTROL / QUALITY ASSURANCE REPORT

**ANALYSIS DATE :** 06/12/2023
**MATRIX :** High Purity $N_2$
**UNITS :** PPB (v/v)

**INSTRUMENT ID :** GC/MS-02
**CALIBRATION STD ID :** MS1-042023-02
**ANALYST :** DL

### VOLATILE ORGANIC COMPOUNDS BY EPA METHOD TO-15

Continuing Calibration Verification of the 05/01/2023 Calibration

| *Analyte Compounds* | *Source*[1] | *CCV*[2] | *% Recovery*[3] |
|---|---|---|---|
| 4-BFB (surrogate standard) | 9.60 | 9.54 | 99 |
| Chlorodifluoromethane | 10.40 | 9.43 | 91 |
| Propene | 10.60 | 9.04 | 85 |
| Dichlorodifluoromethane | 10.40 | 10.05 | 97 |
| Dimethyl Ether | 10.20 | 8.46 | 83 |
| Chloromethane | 10.40 | 9.61 | 92 |
| Dichlorotetrafluoroethane | 10.30 | 10.33 | 100 |
| Vinyl Chloride | 10.50 | 10.12 | 96 |
| Acetaldehyde | 21.10 | 23.64 | 112 |
| Methanol | 18.80 | 15.25 | 81 |
| 1,3-Butadiene | 10.60 | 9.77 | 92 |
| Bromomethane | 10.40 | 9.66 | 93 |
| Chloroethane | 10.30 | 9.09 | 88 |
| Dichlorofluoromethane | 10.20 | 9.66 | 95 |
| Ethanol | 11.20 | 9.57 | 85 |
| Vinyl Bromide | 10.10 | 9.02 | 89 |
| Acrolein | 11.10 | 9.56 | 86 |
| Acetone | 10.60 | 9.19 | 87 |
| Trichlorofluoromethane | 10.50 | 9.82 | 94 |
| 2-Propanol (IPA) | 11.00 | 9.92 | 90 |
| Acrylonitrile | 11.20 | 9.42 | 84 |
| 1,1-Dichloroethene | 10.40 | 9.46 | 91 |
| Methylene Chloride (DCM) | 10.50 | 9.46 | 90 |
| TertButanol (TBA) | 11.10 | 9.53 | 86 |
| Allyl Chloride | 10.20 | 8.93 | 88 |
| Carbon Disulfide | 10.50 | 9.24 | 88 |
| Trichlorotrifluoroethane | 10.40 | 9.46 | 91 |
| trans-1,2-Dichloroethene | 10.60 | 9.47 | 89 |
| 1,1-Dichloroethane | 10.50 | 8.93 | 85 |
| Methyl Tert Butyl Ether (MTBE) | 10.50 | 8.59 | 82 |
| Vinyl Acetate | 11.00 | 8.80 | 80 |
| 2-Butanone (MEK) | 10.60 | 8.66 | 82 |
| cis-1,2-Dichloroethene | 10.50 | 9.23 | 88 |
| Hexane | 10.70 | 8.63 | 81 |
| Chloroform | 10.60 | 9.31 | 88 |
| Ethyl Acetate | 10.60 | 8.71 | 82 |
| Tetrahydrofuran | 10.20 | 7.71 | 76 |
| 1,2-Dichloroethane | 10.50 | 8.86 | 84 |
| 1,1,1-Trichloroethane | 10.40 | 9.07 | 87 |
| Benzene | 10.60 | 9.81 | 93 |
| Carbon Tetrachloride | 10.20 | 9.64 | 95 |
| Cyclohexane | 10.50 | 9.35 | 89 |

| *Analyte Compounds (Continued)* | *Source*[1] | *CCV*[2] | *% Recovery*[3] |
|---|---|---|---|
| 1,2-Dichloropropane | 10.50 | 9.58 | 91 |
| Bromodichloromethane | 10.40 | 9.65 | 93 |
| 1,4-Dioxane | 10.40 | 9.57 | 92 |
| Trichloroethene (TCE) | 10.40 | 10.27 | 99 |
| 2,2,4-Trimethylpentane | 10.00 | 9.07 | 91 |
| Methyl Methacrylate | 11.00 | 10.24 | 93 |
| Heptane | 10.50 | 9.28 | 88 |
| cis-1,3-Dichloropropene | 10.40 | 9.45 | 91 |
| 4-Methyl-2-pentanone (MiBK) | 10.40 | 9.43 | 91 |
| trans-1,3-Dichloropropene | 10.50 | 9.31 | 89 |
| 1,1,2-Trichloroethane | 10.50 | 10.02 | 95 |
| Toluene | 10.60 | 10.21 | 96 |
| 2-Hexanone (MBK) | 10.50 | 9.49 | 90 |
| Dibromochloromethane | 10.30 | 10.18 | 99 |
| 1,2-Dibromoethane | 10.60 | 10.21 | 96 |
| Tetrachloroethene (PCE) | 10.40 | 10.05 | 97 |
| Chlorobenzene | 10.60 | 10.59 | 100 |
| Ethylbenzene | 10.50 | 10.21 | 97 |
| m & p-Xylene | 21.00 | 20.96 | 100 |
| Bromoform | 10.50 | 10.89 | 104 |
| Styrene | 10.50 | 10.34 | 98 |
| 1,1,2,2-Tetrachloroethane | 10.50 | 10.53 | 100 |
| o-Xylene | 10.50 | 10.32 | 98 |
| 1,2,3-Trichloropropane | 11.00 | 10.12 | 92 |
| Isopropylbenzene (Cumene) | 10.30 | 10.18 | 99 |
| α-Pinene | 10.70 | 11.50 | 107 |
| 2-Chlorotoluene | 10.30 | 9.90 | 96 |
| n-Propylbenzene | 10.10 | 9.70 | 96 |
| 4-Ethyltoluene | 10.30 | 10.64 | 103 |
| 1,3,5-Trimethylbenzene | 10.30 | 10.10 | 98 |
| β-Pinene | 11.00 | 10.65 | 97 |
| 1,2,4-Trimethylbenzene | 10.30 | 10.41 | 101 |
| Benzyl Chloride (a-Chlorotoluene) | 10.40 | 9.62 | 93 |
| 1,3-Dichlorobenzene | 10.40 | 10.84 | 104 |
| 1,4-Dichlorobenzene | 10.30 | 10.42 | 101 |
| Sec-ButylBenzene | 10.10 | 10.16 | 101 |
| 1,2-Dichlorobenzene | 10.60 | 10.86 | 102 |
| n-ButylBenzene | 10.20 | 10.22 | 100 |
| 1,2-Dibromo-3-Chloropropane | 10.10 | 10.09 | 100 |
| 1,2,4-Trichlorobenzene | 11.00 | 11.95 | 109 |
| Naphthalene | 11.50 | 12.03 | 105 |
| Hexachlorobutadiene | 11.00 | 10.89 | 99 |

[1] Concentration of analyte compound in certified source standard.

[2] Measured result from daily Continuing Calibration Verification (CCV).

[3] The acceptable range for analyte recovery is 100±30%.

## QUALITY CONTROL / QUALITY ASSURANCE REPORT

**ANALYSIS DATE : 06/12/2023**
**MATRIX : High Purity $N_2$**
**UNITS : PPB (v/v)**

**INSTRUMENT ID : GC/MS-02**
**CALIBRATION STD ID : MS1-042023-02**
**ANALYST : DL**

### VOLATILE ORGANIC COMPOUNDS BY EPA METHOD TO-15

Laboratory Control Spike Analysis

| *System Monitoring Compounds* | *Sample Concentration* | *Spike Added* | *LCS[1] Recovery* | *LCSD[1] Recovery* | *LCS[1] % Recovery[2]* | *LCSD[1] % Recovery[2]* | *RPD[3]* |
|---|---|---|---|---|---|---|---|
| 4-BFB (surrogate standard) | 0.0 | 9.60 | 9.54 | 9.61 | 99 | 100 | 0.7 |
| 1,1-Dichloroethene | 0.0 | 10.40 | 9.46 | 9.24 | 91 | 89 | 2.4 |
| Methylene Chloride (DCM) | 0.0 | 10.50 | 9.46 | 9.10 | 90 | 87 | 3.9 |
| Benzene | 0.0 | 10.60 | 9.81 | 9.38 | 93 | 88 | 4.5 |
| Trichloroethene (TCE) | 0.0 | 10.40 | 10.27 | 9.61 | 99 | 92 | 6.6 |
| Toluene | 0.0 | 10.60 | 10.21 | 9.77 | 96 | 92 | 4.4 |
| Tetrachloroethene (PCE) | 0.0 | 10.40 | 10.05 | 10.01 | 97 | 96 | 0.4 |
| Chlorobenzene | 0.0 | 10.60 | 10.59 | 10.37 | 100 | 98 | 2.1 |
| Ethylbenzene | 0.0 | 10.50 | 10.21 | 10.13 | 97 | 96 | 0.8 |
| m & p-Xylene | 0.0 | 21.00 | 20.96 | 20.75 | 100 | 99 | 1.0 |
| o-Xylene | 0.0 | 10.50 | 10.32 | 10.26 | 98 | 98 | 0.6 |

[1] Laboratory Control Spike (LCS) / Laboratory Control Spike Duplicate (LCSD)

[2] The acceptable range for analyte recovery is 100±30%.

[3] Relative Percent Difference (RPD) between LCS recovery and LCSD recovery (acceptable range is <25%).

## QUALITY CONTROL / QUALITY ASSURANCE REPORT

**ANALYSIS DATE : 06/12/2023** | **INSTRUMENT ID : GC/MS-02**

**MATRIX : High Purity He or $N_2$** | **ANALYST : DL**

**UNITS : PPB (v/v)**

### VOLATILE ORGANIC COMPOUNDS BY EPA METHOD TO-15

Method Blank Analysis

| *Analyte Compounds* | *MB 061223* | *Reporting Limit (RL)* |
|---|---|---|
| 4-BFB (surrogate standard) | 90% | 100±30% |
| Chlorodifluoromethane | <RL | 0.5 |
| Propene | <RL | 1.0 |
| Dichlorodifluoromethane | <RL | 0.5 |
| Dimethyl Ether | <RL | 1.0 |
| Chloromethane | <RL | 0.5 |
| Dichlorotetrafluoroethane | <RL | 0.5 |
| Vinyl Chloride | <RL | 0.5 |
| Acetaldehyde | <RL | 5.0 |
| Methanol | <RL | 5.0 |
| 1,3-Butadiene | <RL | 0.5 |
| Bromomethane | <RL | 0.5 |
| Chloroethane | <RL | 0.5 |
| Dichlorofluoromethane | <RL | 0.5 |
| Ethanol | <RL | 2.0 |
| Vinyl Bromide | <RL | 0.5 |
| Acrolein | <RL | 1.0 |
| Acetone | <RL | 2.0 |
| Trichlorofluoromethane | <RL | 0.5 |
| 2-Propanol (IPA) | <RL | 2.0 |
| Acrylonitrile | <RL | 0.5 |
| 1,1-Dichloroethene | <RL | 0.5 |
| Methylene Chloride (DCM) | <RL | 1.0 |
| TertButanol (TBA) | <RL | 0.5 |
| Allyl Chloride | <RL | 1.0 |
| Carbon Disulfide | <RL | 2.0 |
| Trichlorotrifluoroethane | <RL | 0.5 |
| trans-1,2-Dichloroethene | <RL | 0.5 |
| 1,1-Dichloroethane | <RL | 0.5 |
| Methyl Tert Butyl Ether (MTBE) | <RL | 0.5 |
| Vinyl Acetate | <RL | 1.0 |
| 2-Butanone (MEK) | <RL | 1.0 |
| cis-1,2-Dichloroethene | <RL | 0.5 |
| Hexane | <RL | 0.5 |
| Chloroform | <RL | 0.5 |
| Ethyl Acetate | <RL | 0.5 |
| Tetrahydrofuran | <RL | 0.5 |
| 1,2-Dichloroethane | <RL | 0.5 |
| 1,1,1-Trichloroethane | <RL | 0.5 |
| Benzene | <RL | 0.5 |
| Carbon Tetrachloride | <RL | 0.5 |
| Cyclohexane | <RL | 0.5 |

| *Analyte Compounds (Continued)* | *MB 061223* | *Reporting Limit (RL)* |
|---|---|---|
| 1,2-Dichloropropane | <RL | 0.5 |
| Bromodichloromethane | <RL | 0.5 |
| 1,4-Dioxane | <RL | 1.0 |
| Trichloroethene (TCE) | <RL | 0.5 |
| 2,2,4-Trimethylpentane | <RL | 0.5 |
| Methyl Methacrylate | <RL | 0.5 |
| Heptane | <RL | 0.5 |
| cis-1,3-Dichloropropene | <RL | 0.5 |
| 4-Methyl-2-pentanone (MiBK) | <RL | 0.5 |
| trans-1,3-Dichloropropene | <RL | 0.5 |
| 1,1,2-Trichloroethane | <RL | 0.5 |
| Toluene | <RL | 0.5 |
| 2-Hexanone (MBK) | <RL | 1.0 |
| Dibromochloromethane | <RL | 0.5 |
| 1,2-Dibromoethane | <RL | 0.5 |
| Tetrachloroethene (PCE) | <RL | 0.5 |
| Chlorobenzene | <RL | 0.5 |
| Ethylbenzene | <RL | 0.5 |
| m & p-Xylene | <RL | 1.0 |
| Bromoform | <RL | 0.5 |
| Styrene | <RL | 0.5 |
| 1,1,2,2-Tetrachloroethane | <RL | 0.5 |
| o-Xylene | <RL | 0.5 |
| 1,2,3-Trichloropropane | <RL | 0.5 |
| Isopropylbenzene (Cumene) | <RL | 0.5 |
| α-Pinene | <RL | 1.0 |
| 2-Chlorotoluene | <RL | 0.5 |
| n-Propylbenzene | <RL | 0.5 |
| 4-Ethyltoluene | <RL | 0.5 |
| 1,3,5-Trimethylbenzene | <RL | 0.5 |
| β-Pinene | <RL | 2.0 |
| 1,2,4-Trimethylbenzene | <RL | 0.5 |
| Benzyl Chloride (a-Chlorotoluene) | <RL | 0.5 |
| 1,3-Dichlorobenzene | <RL | 0.5 |
| 1,4-Dichlorobenzene | <RL | 0.5 |
| Sec-ButylBenzene | <RL | 0.5 |
| 1,2-Dichlorobenzene | <RL | 0.5 |
| n-ButylBenzene | <RL | 0.5 |
| 1,2-Dibromo-3-Chloropropane | <RL | 0.5 |
| 1,2,4-Trichlorobenzene | <RL | 0.5 |
| Naphthalene | <RL | 0.5 |
| Hexachlorobutadiene | <RL | 0.5 |

## QUALITY CONTROL / QUALITY ASSURANCE REPORT

ANALYSIS DATE : 06/12/2023
MATRIX : Air
UNITS : PPB (v/v)

INSTRUMENT ID : GC/MS-02
ANALYST : DL
DILUTION FACTOR[1] : x17122.58

### VOLATILE ORGANIC COMPOUNDS BY EPA METHOD TO-15

Duplicate Analysis of AAC Sample ID: 231050-45074

| *Analyte Compounds* | *Sample* | *Duplicate* | *RPD*[2] |
|---|---|---|---|
| 4-BFB (surrogate standard) | 8.84 | 9.00 | 1.8 |
| Chlorodifluoromethane | <SRL | <SRL | *NA* |
| Propene | <SRL | <SRL | *NA* |
| Dichlorodifluoromethane | <SRL | <SRL | *NA* |
| Dimethyl Ether | <SRL | <SRL | *NA* |
| Chloromethane | <SRL | <SRL | *NA* |
| Dichlorotetrafluoroethane | <SRL | <SRL | *NA* |
| Vinyl Chloride | <SRL | <SRL | *NA* |
| Acetaldehyde | <SRL | <SRL | *NA* |
| Methanol | 1690000 | 1610000 | 5.2 |
| 1,3-Butadiene | <SRL | <SRL | *NA* |
| Bromomethane | <SRL | <SRL | *NA* |
| Chloroethane | <SRL | <SRL | *NA* |
| Dichlorofluoromethane | <SRL | <SRL | *NA* |
| Ethanol | <SRL | <SRL | *NA* |
| Vinyl Bromide | <SRL | <SRL | *NA* |
| Acrolein | <SRL | <SRL | *NA* |
| Acetone | <SRL | <SRL | *NA* |
| Trichlorofluoromethane | <SRL | <SRL | *NA* |
| 2-Propanol (IPA) | <SRL | <SRL | *NA* |
| Acrylonitrile | <SRL | <SRL | *NA* |
| 1,1-Dichloroethene | <SRL | <SRL | *NA* |
| Methylene Chloride (DCM) | <SRL | <SRL | *NA* |
| TertButanol (TBA) | <SRL | <SRL | *NA* |
| Allyl Chloride | <SRL | <SRL | *NA* |
| Carbon Disulfide | <SRL | <SRL | *NA* |
| Trichlorotrifluoroethane | <SRL | <SRL | *NA* |
| trans-1,2-Dichloroethene | <SRL | <SRL | *NA* |
| 1,1-Dichloroethane | <SRL | <SRL | *NA* |
| Methyl Tert Butyl Ether (MTBE) | <SRL | <SRL | *NA* |
| Vinyl Acetate | <SRL | <SRL | *NA* |
| 2-Butanone (MEK) | <SRL | <SRL | *NA* |
| cis-1,2-Dichloroethene | <SRL | <SRL | *NA* |
| Hexane | <SRL | <SRL | *NA* |
| Chloroform | <SRL | <SRL | *NA* |
| Ethyl Acetate | <SRL | <SRL | *NA* |
| Tetrahydrofuran | <SRL | <SRL | *NA* |
| 1,2-Dichloroethane | <SRL | <SRL | *NA* |
| 1,1,1-Trichloroethane | <SRL | <SRL | *NA* |
| Benzene | <SRL | <SRL | *NA* |
| Carbon Tetrachloride | <SRL | <SRL | *NA* |
| Cyclohexane | <SRL | <SRL | *NA* |

| *Analyte Compounds (Continued)* | *Sample* | *Duplicate* | *RPD*[2] |
|---|---|---|---|
| 1,2-Dichloropropane | <SRL | <SRL | *NA* |
| Bromodichloromethane | <SRL | <SRL | *NA* |
| 1,4-Dioxane | <SRL | <SRL | *NA* |
| Trichloroethene (TCE) | <SRL | <SRL | *NA* |
| 2,2,4-Trimethylpentane | <SRL | <SRL | *NA* |
| Methyl Methacrylate | <SRL | <SRL | *NA* |
| Heptane | <SRL | <SRL | *NA* |
| cis-1,3-Dichloropropene | <SRL | <SRL | *NA* |
| 4-Methyl-2-pentanone (MiBK) | <SRL | <SRL | *NA* |
| trans-1,3-Dichloropropene | <SRL | <SRL | *NA* |
| 1,1,2-Trichloroethane | <SRL | <SRL | *NA* |
| Toluene | <SRL | <SRL | *NA* |
| 2-Hexanone (MBK) | <SRL | <SRL | *NA* |
| Dibromochloromethane | <SRL | <SRL | *NA* |
| 1,2-Dibromoethane | <SRL | <SRL | *NA* |
| Tetrachloroethene (PCE) | <SRL | <SRL | *NA* |
| Chlorobenzene | <SRL | <SRL | *NA* |
| Ethylbenzene | <SRL | <SRL | *NA* |
| m & p-Xylene | <SRL | <SRL | *NA* |
| Bromoform | <SRL | <SRL | *NA* |
| Styrene | <SRL | <SRL | *NA* |
| 1,1,2,2-Tetrachloroethane | <SRL | <SRL | *NA* |
| o-Xylene | <SRL | <SRL | *NA* |
| 1,2,3-Trichloropropane | <SRL | <SRL | *NA* |
| Isopropylbenzene (Cumene) | <SRL | <SRL | *NA* |
| α-Pinene | <SRL | <SRL | *NA* |
| 2-Chlorotoluene | <SRL | <SRL | *NA* |
| n-Propylbenzene | <SRL | <SRL | *NA* |
| 4-Ethyltoluene | <SRL | <SRL | *NA* |
| 1,3,5-Trimethylbenzene | <SRL | <SRL | *NA* |
| β-Pinene | <SRL | <SRL | *NA* |
| 1,2,4-Trimethylbenzene | <SRL | <SRL | *NA* |
| Benzyl Chloride (a-Chlorotoluene) | <SRL | <SRL | *NA* |
| 1,3-Dichlorobenzene | <SRL | <SRL | *NA* |
| 1,4-Dichlorobenzene | <SRL | <SRL | *NA* |
| Sec-ButylBenzene | <SRL | <SRL | *NA* |
| 1,2-Dichlorobenzene | <SRL | <SRL | *NA* |
| n-ButylBenzene | <SRL | <SRL | *NA* |
| 1,2-Dibromo-3-Chloropropane | <SRL | <SRL | *NA* |
| 1,2,4-Trichlorobenzene | <SRL | <SRL | *NA* |
| Naphthalene | <SRL | <SRL | *NA* |
| Hexachlorobutadiene | <SRL | <SRL | *NA* |

[1] Dilution factor is the product of the Canister Dilution Factor and the Analysis Dilution Factor.

[2] Relative Percent Difference (RPD) between Sample analysis and Duplicate analysis (acceptable range is <25%).

SRL - Sample Reporting Limit (minimum)

MONTROSE
AIR QUALITY SERVICES

# CHAIN OF CUSTODY

231059
Box 2 of 2.

**Portland Location**
13585 NE Whitaker Way
Portland, OR 97230
Phone (503) 255-5050 | Fax (503) 255-0505

**Lab info:**
Atmospheric Analysis and Consulting (AAC)
2225 Sperry Avenue
Ventura CA 93003

| | | |
|---|---|---|
| **Client / Project:** ODEQ ACI | **Project / Sample Location:** ACI Stack | **Test / Analytical Method:** NCASI 99.02 |
| **Project No.:** PROJ-021372 | **Purchase Order No:** | **Special Analysis / Detection Limit / Reporting Instructions:** |
| **Send Analytical Report To:** Portland QA/QC: PortlandQA-QC@montrose-env.com; sewolfendale@montrose-env.com | **Sampler or PM Signature:** | Selected HAPS: Acrolein, Benzene, Formaldehyde - ppb level |

| Run / Sample No. | Date | Time | Containers | Sample Fraction | Reagent | Lab / Sample ID No. |
|---|---|---|---|---|---|---|
| R-1-CAN | 5/24/23 | 1440-1755 | 1 | 45075 canister | canister | |
| R-2A-CAN | 5/25/23 | 0852-1152 | 1 | 45076 canister | canister | |
| R-2B-CAN | 5/25/23 | 0852-1152 | 1 | 45077 canister | canister | |
| R-3A-CAN | 5/25/23 | 1305-1605 | 1 | 45078 canister | canister | |
| R-3B-CAN | 5/25/23 | 1305-1605 | 1 | 45079 spiked canister | spiked canister | |
| | | | | | | |
| R-TS-CAN | 5/30/23 | 1200-1500 | 1 | 45080 Train Spike - unspiked canister | canister | |
| R-TS-SPIKEDCAN | 5/30/23 | 1200-1500 | 1 | 45081 Train Spike - spiked canister | spiked canister | |
| | | | | | | |
| | | | | | | |
| | | | | | | |
| | | | | | | |
| | | | | | | |
| | | | | | | |
| | | | | | | |
| | | | | | | |
| **Total Containers** | | | 7 | | | |

| | Date | Time | Received by | Date | Time | Temp. |
|---|---|---|---|---|---|---|
| Relinquished by | 6/1/23 | 1200 | | 6/2/23 | 1009 | |
| Relinquished by | Date | Time | Received by | Date | Time | Temp. |
| Relinquished by | Date | Time | Received by | Date | Time | Temp. |

Fx- 8x cans (1x unused) + 3x FCs 6.3° C T14

NCASI 99.02 CoC - canisters.xlsm

W006AS-021372-RT-2857
344 of 489

MONTROSE
AIR QUALITY SERVICES

# CHAIN OF CUSTODY

231051

**Portland Location**
13585 NE Whitaker Way
Portland, OR 97230
Phone (503) 255-5050 | Fax (503) 255-0505

**Lab info:**
Atmospheric Analysis and Consulting (AAC)
2225 Sperry Avenue
Ventura CA 93003

| | | |
|---|---|---|
| **Client / Project:** ODEQ ACI | **Project / Sample Location:** ACI Stack | **Test / Analytical Method:** NCASI 99.02 |
| **Project No.:** PROJ-021372 | **Purchase Order No:** | **Special Analysis / Detection Limit / Reporting Instructions:** |
| **Send Analytical Report To:** Portland QA/QC: PortlandQA-QC@montrose-env.com; sewolfendale@montrose-env.com | **Sampler or PM Signature:** | Selected HAPS: Acrolein, Benzene, Formaldehyde - ppb level |

| Run / Sample No. | Date | Time | Containers | Sample Fraction | | Reagent | Lab / Sample ID No. |
|---|---|---|---|---|---|---|---|
| R-1 | 5/24/23 | 1440-1755 | 1 | 45082 | Impinger/Rinse | H2O | |
| R-2A | 5/25/23 | 0852-1152 | 1 | 45083 | Impinger/Rinse | H2O | |
| R-2B | 5/25/23 | 0852-1152 | 1 | 45084 | Impinger/Rinse | H2O | |
| R-3A | 5/25/23 | 1305-1605 | 1 | 45085 | Impinger/Rinse | H2O | |
| R-3B | 5/25/23 | 1305-1605 | 1 | 45086 | Impinger/Rinse - Spiked | H2O + Spike | |
| | | | | | | | |
| R-TS | 5/30/23 | 1200-1500 | 1 | 45087 | Train Spike | H2O + Spike | |
| R-FB-1 | 5/25/23 | 0900 | 1 | 45088 | Field Blank | H2O | |
| R-FB-2 | 5/30/23 | 1200 | 1 | 45089 | Field Blank | H2O | |
| R-EB | 5/25/23 | 0900 | 1 | 45090 | Equipment Blank | H2O | |
| R-AS | 5/25/23 | 0900 | 1 | 45091 | Aqueous Spike | H2O + Spike | |
| R-AS-2 | 5/30/23 | 1200. | 1 | 45092 | Aqueous Spike | H2O + Spike. | |
| | | | | | | | |
| | | | | | | | |
| | | | | | | | |
| | | | | | | | |
| **Total Containers** | | | ~~10~~ 11 | | | | |

| | Date | Time | Received by | Date | Time | Temp. |
|---|---|---|---|---|---|---|
| Relinquished by | 6/1/23 | 1200. | | 6/2/23 | 1004 | |
| Relinquished by | Date | Time | Received by | Date | Time | Temp. |
| Relinquished by | Date | Time | Received by | Date | Time | Temp. |

6.3°C T14



W006AS-021372-RT-2857
345 of 489

# Appendix C.6
# Fuel & Biochar Sample Results

Hazen Research, Inc.
4601 Indiana Street
Golden, CO 80403 USA
Tel: (303) 279-4501
Fax: (303) 278-1528

Lab Control ID: 23F01293
Received: Jun 05, 2023
Reported: Jun 16, 2023
Purchase Order No.
None Received

Customer ID: 05363Z
Account ID: Z05873

Sebastian Wolfendale
Montrose Environmental
13585 North East Whitaker Way
Portland, OR 97230

# ANALYTICAL REPORT

*Report may only be copied in its entirety.*
*Results reported herein relate only to discrete samples submitted by the client. Hazen Research, Inc. does not warrant that the results are representative of anything other than the samples that were received in the laboratory*

By: Vickie Buster

Fuel Laboratory

Hazen Research, Inc.
4601 Indiana Street
Golden, CO 80403 USA
Tel: (303) 279-4501
Fax: (303) 278-1528

Lab Control ID: 23F01293
Received: Jun 05, 2023
Reported: Jun 16, 2023
Purchase Order No.
None Received

Customer ID: 05363Z
Account ID: Z05873

# ANALYTICAL REPORT

Sebastian Wolfendale
Montrose Environmental

**Client Sample ID** **Day 1 Wood Fuel Primary 5/23/23 1700**
Lab Sample ID 23F01293-001

| Reporting Basis > | As Rec'd | Dry | Air Dry |
|---|---|---|---|
| **Proximate (%)** | | | |
| Moisture | 24.94 | 0.00 | 4.05 |
| Ash | 0.55 | 0.73 | 0.70 |
| Volatile | 61.72 | 82.23 | 78.90 |
| Fixed C | 12.79 | 17.04 | 16.35 |
| Total | 100.00 | 100.00 | 100.00 |
| Sulfur | 0.005 | 0.006 | 0.006 |
| Btu/lb (HHV) | 6020 | 8021 | 7696 |
| Btu/lb (LHV) | 5339 | 7455 | |
| MMF Btu/lb | 6056 | 8084 | |
| MAF Btu/lb | | 8080 | |
| **Ultimate (%)** | | | |
| Moisture | 24.94 | 0.00 | 4.05 |
| Carbon | 37.31 | 49.70 | 47.69 |
| Hydrogen | 4.58 | 6.10 | 5.86 |
| Nitrogen | 0.19 | 0.25 | 0.24 |
| Sulfur | 0.005 | 0.006 | 0.006 |
| Ash | 0.55 | 0.73 | 0.70 |
| Oxygen* | 32.43 | 43.21 | 41.45 |
| Total | 100.00 | 100.00 | 100.00 |
| Chlorine** | | | |
| Air Dry Loss (%) | | 21.77 | |
| Total | 0.005 | 0.006 | |
| Water Soluble Alkalies (%) | | | |
| Na2O | | | |
| K2O | | | |

Lb. Alkali Oxide/MM Btu =
Lb. Ash/MM Btu= 0.91
Lb. SO2/MM Btu= 0.016
Lb. Cl/MM Btu=
F-Factor(dry),DSCF/MM Btu= 9,778

Report Prepared By:

Vickie Buster

Fuel Laboratory

* Oxygen by difference
** Not usually reported as part of the ultimate analysis.

Hazen Research, Inc.
4601 Indiana Street
Golden, CO 80403 USA
Tel: (303) 279-4501
Fax: (303) 278-1528

Lab Control ID: 23F01293
Received: Jun 05, 2023
Reported: Jun 16, 2023
Purchase Order No.
None Received

Customer ID: 05363Z
Account ID: Z05873

# ANALYTICAL REPORT

Sebastian Wolfendale
Montrose Environmental

**Client Sample ID** **Day 2 Wood Fuel Primary 5/24/23 1700**
Lab Sample ID 23F01293-002

| Reporting Basis > | As Rec'd | Dry | Air Dry |
|---|---|---|---|
| **Proximate (%)** | | | |
| Moisture | 19.41 | 0.00 | 2.77 |
| Ash | 1.07 | 1.33 | 1.29 |
| Volatile | 65.86 | 81.71 | 79.45 |
| Fixed C | 13.66 | 16.96 | 16.49 |
| Total | 100.00 | 100.00 | 100.00 |
| Sulfur | 0.020 | 0.025 | 0.024 |
| Btu/lb (HHV) | 6174 | 7661 | 7448 |
| Btu/lb (LHV) | 5518 | 7095 | |
| MMF Btu/lb | 6246 | 7772 | |
| MAF Btu/lb | | 7764 | |
| **Ultimate (%)** | | | |
| Moisture | 19.41 | 0.00 | 2.77 |
| Carbon | 39.07 | 48.47 | 47.13 |
| Hydrogen | 4.92 | 6.10 | 5.93 |
| Nitrogen | 0.27 | 0.33 | 0.32 |
| Sulfur | 0.020 | 0.025 | 0.024 |
| Ash | 1.07 | 1.33 | 1.29 |
| Oxygen* | 35.24 | 43.75 | 42.54 |
| Total | 100.00 | 100.00 | 100.00 |
| Chlorine** | | | |
| Air Dry Loss (%) | | 17.11 | |
| Total | 0.020 | 0.025 | |
| Water Soluble Alkalies (%) | | | |
| Na2O | | | |
| K2O | | | |

Lb. Alkali Oxide/MM Btu =
Lb. Ash/MM Btu= 1.73
Lb. SO2/MM Btu= 0.064
Lb. Cl/MM Btu=
F-Factor(dry),DSCF/MM Btu= 9,960

Report Prepared By:

Vickie Buster

Fuel Laboratory

* Oxygen by difference
** Not usually reported as part of the ultimate analysis.

Hazen Research, Inc.
4601 Indiana Street
Golden, CO 80403 USA
Tel: (303) 279-4501
Fax: (303) 278-1528

Lab Control ID: 23F01293
Received: Jun 05, 2023
Reported: Jun 16, 2023
Purchase Order No.
None Received

Customer ID: 05363Z
Account ID: Z05873

# ANALYTICAL REPORT

Sebastian Wolfendale
Montrose Environmental

**Client Sample ID** **Day 3 Wood Fuel Primary 5/25/23 1700**
Lab Sample ID 23F01293-003

| Reporting Basis > | As Rec'd | Dry | Air Dry |
|---|---|---|---|
| **Proximate (%)** | | | |
| Moisture | 20.89 | 0.00 | 2.06 |
| Ash | 0.73 | 0.92 | 0.90 |
| Volatile | 64.97 | 82.13 | 80.44 |
| Fixed C | 13.41 | 16.95 | 16.60 |
| Total | 100.00 | 100.00 | 100.00 |
| Sulfur | 0.019 | 0.025 | 0.024 |
| Btu/lb (HHV) | 6334 | 8006 | 7841 |
| Btu/lb (LHV) | 5660 | 7427 | |
| MMF Btu/lb | 6384 | 8086 | |
| MAF Btu/lb | | 8081 | |
| **Ultimate (%)** | | | |
| Moisture | 20.89 | 0.00 | 2.06 |
| Carbon | 38.81 | 49.06 | 48.05 |
| Hydrogen | 4.94 | 6.25 | 6.12 |
| Nitrogen | 0.26 | 0.33 | 0.32 |
| Sulfur | 0.019 | 0.025 | 0.024 |
| Ash | 0.73 | 0.92 | 0.90 |
| Oxygen* | 34.35 | 43.42 | 42.53 |
| Total | 100.00 | 100.00 | 100.00 |
| Chlorine** | | | |
| Air Dry Loss (%) | | 19.23 | |
| Total | 0.019 | 0.025 | |
| Water Soluble Alkalies (%) | | | |
| Na2O | | | |
| K2O | | | |

Lb. Alkali Oxide/MM Btu =
Lb. Ash/MM Btu= 1.15
Lb. SO2/MM Btu= 0.061
Lb. Cl/MM Btu=
F-Factor(dry),DSCF/MM Btu= 9,729

Report Prepared By:

Vickie Buster

Fuel Laboratory

* Oxygen by difference
** Not usually reported as part of the ultimate analysis.

HAZEN

HAZEN RESEARCH, INC.
4601 INDIANA STREET
GOLDEN, CO 80403
Phone - (303) 279 4501 Fax - (303) 278 1528

# CHAIN OF CUSTODY RECORD

1293

| Customer Information | | Billing Information (If different) | |
|---|---|---|---|
| Client Name: | Montrose Environmental | Billing Name: | Montrose Environmental |
| Contact: | Sebastian Wolfendale | Billing Contact: | Candy Sanchez |
| Address: | 13585 NE Whitaker Way | Billing Address: | 1631 E. Saint Andrew Place |
| | Portland, OR 97230 | | Santa Ana, CA 92705 |
| | | | csanchez@montrose-env.com |
| Phone: | 425-802-0794 | PO #: | Project #: PROJ-021372 |
| e-mail: | sewolfendale@montrose-env.com | | |
| Sampler's Name(s) (Print) | Sebastian Wolfendale | (Signature) | |

| | Sample Identification | Sample Date and Time | Grab | Composite | Samp Type(1) | No. of Containers | Cont. Type(2) | Preservative(3) | Analyses Required |
|---|---|---|---|---|---|---|---|---|---|
| 1 | Day 1 Wood Fuel Sample Primary | 5/23/2023 1700 | | x | | 1 | | | Ultimate, Proximate, and BTU |
| | Day 1 Wood Fuel Sample Backup | 5/23/2023 1700 | | x | | 1 | | | Do not analyze unless primary is inadequate |
| 2 | Day 2 Wood Fuel Sample Primary | 5/24/2023 1700 | | x | | 1 | | | Ultimate, Proximate, and BTU |
| | Day 2 Wood Fuel Sample Backup | 5/24/2023 1700 | | x | | 1 | | | Do not analyze unless primary is inadequate |
| 3 | Day 3 Wood Fuel Sample Primary | 5/25/2023 1700 | | x | | 1 | | | Ultimate, Proximate, and BTU |
| | Day 3 Wood Fuel Sample Backup | 5/25/2023 1700 | | x | | 1 | | | Do not analyze unless primary is inadequate |
| | | | | | | | | | |
| | | | | | | | | | |
| | | | | | | | | | |
| | | | | | | | | | |

(1) DW=Drinking Water WW=Wastewater SW=Surface Water SO=Soil GW=Ground Water SL=Sludge HZ=Hazardous O=Other
(2) P=Plastic G=Glass O=Other
(3) N=Nitric Acid U=Unpreserved C=Cooled S=Sulfuric Acid B=Sodium Hydroxide T=Sodium Thiosulfate Z=Zinc Acetate O=Other

| | | | |
|---|---|---|---|
| Relinquished by: Sebastian Wolfendale | Date/ Time 6/1/1600 | Received by | Date/ Time / |
| Relinquished by | Date/ Time / | Received by | Date/ Time / |
| Relinquished by | Date/ Time / | Received by | Date/ Time / |
| Shipped by | Date/ Time / | Received for Lab by: Buster 6/5/23 | Date/ Time 5AM |

Method of Shipment

Requested Turnaround Time
Standard Rush (Must be approved, additional charges apply)

Lab use only

shipped to :

Analytical Request 2017 - Wood Fuel 5-25-23.xls

Montrose : ACI – PROJ-021372.

1293

Date 6/1/23.

**Sample Submittal Form**

- ✓ Ultimate, Proximate, & BTU
- _____ Ultimate
- _____ Proximate
- _____ Moisture
- _____ Ash
- _____ Sulfur
- _____ Calorific Value, BTU/lb
- _____ Chlorine
- _____ Elemental Analysis of Ash - **Coal** - (Si, Al,Ti, Fe, Ca, Mg, Na, K, P, and S as oxides)
- _____ Elemental Analysis of Ash - **Biomass** - (Si, Al,Ti, Fe, Ca, Mg, Na, K, P, and S as oxides, Cl and CO2)
- _____ Chlorine in Ash
- _____ Carbon Dioxide in Ash
- _____ Fusion Temperatures of Ash
- _____ Water Soluble Alkalies (Na2O and K2O)
- _____ Lbs. Alkali/MMBtu (Need Na2O and K2O in Ash , Btu/lb, and % Ash)
- _____ Na2O in Ash
- _____ K2O in Ash
- _____ Free Swelling Index
- _____ Other _____

**Sample Identification** *

Day 1-3 Wood fuel sample primary
Day 1-3 Wood fuel sample backup *
* Do not analyze backup unless primary is inadequate.

* Note: If appropriate, please identify any hazardous materials such as nails, glass, metal...etc.

Submit samples to:

Hazen Research, Inc.
Attn: Mark A Pugh
4601 Indiana Street
Golden, Colorado 80403

Report and Billing to:

Company MONTROSE ENVIRONMENTAL
Attention Sebastian Wolfendale
Address 13585 NE Whitaker Way.
City/State Portland OR. 97230.
Phone 425-802-0794.
Fax
E-mail sewolfendale@montrose-env.com.

June 14, 2023 Service Request No:T2300964

Portland QA/QC *Portland QA/QC
Montrose Air Quality Services
13585 NE Whitaker Way
Portland, OR 97230

**Laboratory Results for: ODEQ/ACI**

Dear Portland QA/QC,

Enclosed are the results of the sample(s) submitted to our laboratory June 05, 2023
For your reference, these analyses have been assigned our service request number **T2300964.**

All analyses were performed according to our laboratory's quality assurance program. All results are intended to be considered in their entirety, and ALS Environmental is not responsible for use of less than the complete report. Results
apply only to the items submitted to the laboratory for analysis and individual items (samples) analyzed, as listed in the report.

Respectfully submitted,

**ALS Group USA, Corp. dba ALS Environmental**



Liza Poole

ADDRESS 4208 S Santa Rita Avenue, Tucson, AZ 85714
PHONE +1 520 573 1061 | FAX +1 520 623 9218
ALS Group USA, Corp.
dba ALS Environmental

T2300964 5
Montrose Air Quality Services
ODEQ/ACI

MONTROSE AIR QUALITY SERVICES

# CHAIN OF CUSTODY

**Portland Location**
13585 NE Whitaker Way
Portland, OR 97230
Phone (503) 255-5050 | Fax (503) 255-0505

**Lab info:**
ALS Environmental
4208 S Santa Rita Ave
Tucson AZ, 85714

| Client / Project: | Project / Sample Location: | Test / Analytical Method: |
|---|---|---|
| ODEQ / ACI | ACI Stack | ASTM D5373 / ASTM D3173-03 / ASTM D3302-07ae1, Grind |
| **Project No.:** PROJ-021372 | **Purchase Order No:** ALS QUOTE #: 52954 | **Special Analysis / Detection Limit / Reporting Instructions:** Biochar Samples - analyze primary, do not analyze backup unless primary is inadequate. ASTM D5373: Carbon, Hydrogen, and Nitrogen, Total ASTM D3173-03: Moisture ASTM D3302-07ae1, Grind: Sample prep - dry and grind (if necessary) |
| **Send Analytical Report To:** Portland QA/QC: PortlandQA-QC@montrose-env.com sewolfendale@montrose-env.com | **Sampler or PM Signature:** | |

| Run / Sample No. | Date | Time | Containers | Sample Fraction | Reagent | Lab / Sample ID No. |
|---|---|---|---|---|---|---|
| 001 D1-Biochar-Primary | 5/23/23 | 1700 | 1 | Day 1 - Biochar sample - primary | Biochar | |
| D1-Biochar-Backup | 5/23/23 | 1700 | 1 | Day 1 - Biochar sample - backup | Biochar | |
| 002 D2-Biochar-Primary | 5/24/23 | 1700 | 1 | Day 2 - Biochar sample - primary | Biochar | |
| D2-Biochar-Backup | 5/24/23 | 1700 | 1 | Day 2 - Biochar sample - backup | Biochar | |
| 003 D3-Biochar-Primary | 5/25/23 | 1700 | 1 | Day 3 - Biochar sample - primary | Biochar | |
| D3-Biochar-Backup | 5/25/23 | 1700 | 1 | Day 3 - Biochar sample - backup | Biochar | |
| | | | | | | |
| | | | | | | |
| | | | | | | |
| | | | | | | |
| | | | | | | |
| | | | | | | |
| | | | | | | |
| | | | | | | |
| | | | | | | |
| | | | | | | |
| **Total Containers** | | | 6 | | | |

| Relinquished by | Date | Time | Received by | Date | Time | Temp. |
|---|---|---|---|---|---|---|
| | 6/1/23 | 1600. | | 6/5/23 | 0915 | |
| **Relinquished by** | **Date** | **Time** | **Received by** | **Date** | **Time** | **Temp.** |
| **Relinquished by** | **Date** | **Time** | **Received by** | **Date** | **Time** | **Temp.** |

Biochar CoC.xlsm



354 of 489
W006AS-021372-RT-2857

4208 S.Santa Rita Ave.
Tucson, AZ 85714
T: +1 520 573 1061
www.alsglobal.com

## Sample Receipt Form

T2300964 5
Montrose Air Quality Services
ODEQ/ACI

Client/Project: Montrose Air Quality  Work Order Number: [redacted]

Received by: Cynthia Vroegh  Date & Time: 6/5/2023 0915  Matrix: Solid

Samples were received via?: FedEx Express  Samples were received in: Box

Were custody seals on containers? ○ Yes ◉ No ○ NA  If yes, how many and where?

If present were custody seals intact? ○ Yes ◉ No  If present, were they signed and dated? ○ Yes ◉ No

| Arrival Temp C | Temp Blank C | Tracking Number |
|---|---|---|
| Ambient | NA | 772323264574 |
| | | |
| | | |

Packing material used? Bags | Bubble Wrap | | |

Did all the bottles arrive in good condition (unbroken)? ◉ Yes ○ No ○ NA  If No, record comments below

Did all sample labels and tags agree with COC? ◉ Yes ○ No ○ NA  If No, record discrepancies below

Were all the appropriate containers and volumes received for the tests indicated? ◉ Yes ○ No ○ NA

Are samples received deemed acceptable? ◉ Yes ○ No  MSDS included with paperwork? No

6 - lg ziploc bags with Biochar

**NOTES:**

As a part of ISO 17025 protocols, ALS must notify clients that the quoted analytical methods performed by ALS may have minor modifications from the methods as published. These modifications are written into our Standard Operating Procedures and do not impact the quality of the data. Receipt of this document will be considered an acceptance of the procedures used by the laboratory for analysis unless notified by the client.
Modifications may include, but are not limited to:

- The analysis of a sample matrix that differs from that stated in the published method (example - ASTM D5865 Standard Test Method for Gross Calorific Value of Coal and Coke is used for other matrices such as biomass, Tire Derived Fuel, etc.).
- Analyzing a sample mass that differs from those in the published method (example - to accommodate samples with high concentrations of analyte, samples of limited volume, or to comply with the instrument manufacturer's operating guidelines).
- Instruments used for the analysis may differ from those listed in the published method (example - using ICP- OES when the method references flame Atomic Absorption Spectroscopy)

**Client:** **Montrose Environmental Group**
**13585 NE Whitaker Way**
**Portland, OR 97230**
**Attn:** **Portland QA/QC *Portland QA/QC**

**Project:** **ODEQ/ACI**

**Date Received:** **June 5, 2023**

# Certificate of Analysis

| Sample ID | Sample Date and Time | Lab # | Moisture, Total D3173 wt% | | Carbon D5373 Moist. Free wt% | Hydrogen D5373 Moist. Free wt% | Nitrogen D5373 Moist. Free wt% | |
|---|---|---|---|---|---|---|---|---|
| D1-Biochar-Primary | 5/23/23 1700 | T2300964-001 | 55.97 | | 77.45 | 1.98 | 0.33 | |
| D2-Biochar-Primary | 5/24/23 1700 | T2300964-002 | 49.61 | | 18.60 | 0.16 | 0.11 | |
| D3-Biochar-Primary | 5/25/23 1700 | T2300964-003 | 64.91 | | 88.27 | 1.01 | 0.42 | |

356 of 489

W006AS-021372-RT-2857

# Appendix D
# Quality Assurance/Quality Control

# Appendix D.1
# Units and Abbreviations

MONTROSE
AIR QUALITY SERVICES

# UNITS OF MEASUREMENT

| | |
|---|---|
| @ X% $O_2$ | corrected to X% oxygen (corrected for dilution air) |
| \|CC\| | absolute value of the confidence coefficient |
| \|d\| | absolute value of the mean differences |
| ºC | degrees Celsius |
| ºF | degrees Fahrenheit |
| ºR | degrees Rankine |
| " $H_2O$ | inches of water column |
| 13.6 | specific gravity of mercury |
| ΔH | pressure drop across orifice meter, inches $H_2O$ |
| ΔP | velocity head of stack gas, inches $H_2O$ |
| θ | total sampling time, minutes |
| µg | microgram |
| $\rho_a$ | density of acetone, mg/ml |
| $\rho_w$ | density of water, 0.9982 g/ml or 0.002201 lb/ml |
| acfm | actual cubic feet of gas per minute at stack conditions |
| $A_n$ | cross-sectional area of nozzle, $ft^2$ |
| $A_s$ | cross-sectional area of stack, square feet ($ft^2$) |
| Btu | British thermal unit |
| $B_{ws}$ | proportion by volume of water vapor in gas stream |
| $C_a$ | particulate matter concentration in stack gas, gr/acf |
| $C_{Avg}$ | average unadjusted gas concentration, ppmv |
| $C_{Dir}$ | measured concentration of calibration gas, ppmv |
| cf or $ft^3$ | cubic feet |
| cfm | cubic feet per minute |
| $C_{Gas}$ | average gas concentration adjusted for bias, ppmv |
| $C_M$ | average of initial and final system bias check responses from upscale calibration gas, ppmv |
| cm or $m^3$ | cubic meters |
| $C_{MA}$ | actual concentration of the upscale calibration gas, ppmv |
| $C_O$ | average of initial and final system bias check responses from low-level calibration gas, ppmv |
| $C_p$ | pitot tube coefficient |
| $C_s$ | particulate matter concentration in stack gas, gr/dscf |
| CS | calibration span, % or ppmv |
| $C_S$ | measured concentration of calibration gas, ppmv |
| $C_V$ | manufactured certified concentration of calibration gas, ppmv |
| D | drift assessment, % of span |
| dcf | dry cubic feet |
| dcm | dry cubic meters |
| $D_n$ | diameter of nozzle, inches |
| $D_s$ | diameter of stack, inches |
| dscf | dry standard cubic feet |
| dscfm | dry standard cubic feet per minute |
| dscm | dry standard cubic meters |
| $F_d$ | F-factor, dscf/MMBtu of heat input |
| fpm | feet per minute |
| fps | feet per second |
| ft | feet |
| $ft^2$ | square feet |
| g | gram |
| gal | gallons |
| gr | grains (7000 grains per pound) |

MONTROSE
AIR QUALITY SERVICES

## UNITS OF MEASUREMENT

| | |
|---|---|
| gr/dscf | grains per dry standard cubic feet |
| hr | hour |
| I | percent of isokinetic sampling |
| in | inch |
| k | kilo or thousand (metric units, multiply by $10^3$) |
| K | kelvin (temperature) |
| $K_3$ | conversion factor 0.0154 gr/mg |
| $K_4$ | conversion factor 0.002668 ((in. Hg)($ft^3$))/((ml)(°R)) |
| kg | kilogram |
| $K_p$ | pitot tube constant (85.49 ft/sec) |
| kwscfh | thousand wet standard cubic feet per hour |
| l | liters |
| lb/hr | pounds per hour |
| lb/MMBtu | pounds per million Btu |
| lpm | liters per minute |
| m | meter or milli |
| M | thousand (English units) or mega (million, metric units) |
| $m^3$ | cubic meters |
| $m_a$ | mass of residue of acetone after evaporation, mg |
| $M_d$ | molecular weight of stack gas; dry basis, lb/lb-mole |
| meq | milliequivalent |
| mg | milligram |
| Mg | megagram ($10^6$ grams) |
| min | minute |
| ml or mL | milliliter |
| mm | millimeter |
| MM | million (English units) |
| MMBtu/hr | million Btu per hour |
| $m_n$ | total amount of particulate matter collected, mg |
| mol | mole |
| mol. wt. or MW | molecular weight |
| $M_s$ | molecular weight of stack gas; wet basis, lb/lb-mole |
| MW | molecular weight or megawatt |
| n | number of data points |
| ng | nanogram |
| nm | nanometer |
| $Nm^3$ | normal cubic meter |
| $P_{bar}$ | barometric pressure, inches Hg |
| pg | picogram |
| $P_g$ | stack static pressure, inches $H_2O$ |
| $P_m$ | barometric pressure of dry gas meter, inches Hg |
| ppb | parts per billion |
| ppbv | parts per billion, by volume |
| ppbvd | parts per billion by volume, dry basis |
| ppm | parts per million |
| ppmv | parts per million, by volume |
| ppmvd | parts per million by volume, dry basis |
| ppmvw | parts per million by volume, wet basis |
| $P_s$ | absolute stack gas pressure, inches Hg |
| psi | pounds per square inch |
| psia | pounds per square inch absolute |
| psig | pounds per square inch gauge |

MONTROSE
AIR QUALITY SERVICES

# UNITS OF MEASUREMENT

| | |
|---|---|
| $P_{std}$ | standard absolute pressure, 29.92 inches Hg |
| $Q_a$ | volumetric flow rate, actual conditions, acfm |
| $Q_s$ | volumetric flow rate, standard conditions, scfm |
| $Q_{std}$ | volumetric flow rate, dry standard conditions, dscfm |
| R | ideal gas constant 21.85 ((in. Hg) ($ft^{3)}$)/((°R) (lbmole)) |
| $SB_{final}$ | post-run system bias check, % of span |
| $SB_i$ | pre-run system bias check, % of span |
| scf | standard cubic feet |
| scfh | standard cubic feet per hour |
| scfm | standard cubic feet per minute |
| scm | standard cubic meters |
| scmh | standard cubic meters per hour |
| sec | second |
| sf, sq. ft., or $ft^2$ | square feet |
| std | standard |
| t | metric ton (1000 kg) |
| $T_{0.975}$ | t-value |
| $T_a$ | absolute average ambient temperature, ºR (+459.67 for English) |
| $T_m$ | absolute average dry gas meter temperature, ºR (+459.67 for English) |
| ton or t | ton = 2000 pounds |
| tph or tons/hr | tons per hour |
| tpy or tons/yr | tons per year |
| $T_s$ | absolute average stack gas meter temperature, ºR (+459.67 for English) |
| $T_{std}$ | absolute temperature at standard conditions |
| V | volt |
| $V_a$ | volume of acetone blank, ml |
| $V_{aw}$ | volume of acetone used in wash, ml |
| $V_{lc}$ | total volume $H_2O$ collected in impingers and silica gel, grams |
| $V_m$ | volume of gas sampled through dry gas meter, $ft^3$ |
| $V_{m(std)}$ | volume of gas measured by the dry gas meter, corrected to standard conditions, dscf |
| $V_{ma}$ | stack gas volume sampled, acf |
| $V_n$ | volume collected at stack conditions through nozzle, acf |
| $V_s$ | average stack gas velocity, feet per second |
| $V_{wc(std)}$ | volume of water vapor condensed, corrected to standard conditions, scf |
| $V_{wi(std)}$ | volume of water vapor in gas sampled from impingers, scf |
| $V_{wsg(std)}$ | volume of water vapor in gas sampled from silica gel, scf |
| W | watt |
| $W_a$ | weight of residue in acetone wash, mg |
| $W_{imp}$ | total weight of impingers, grams |
| $W_{sg}$ | total weight of silica gel, grams |
| Y | dry gas meter calibration factor, dimensionless |

## ABBREVIATIONS

| | |
|---|---|
| AAS | atomic absorption spectroscopy |
| ACDP | air contaminant discharge permit |
| ACE | analyzer calibration error, percent of span |
| AD | absolute difference |
| ADL | above detection limit |
| AETB | Air Emissions Testing Body |
| AS | applicable standard (emission limit) |
| ASTM | American Society For Testing And Materials |
| BACT | best achievable control technology |
| BDL | below detection limit |
| BHP | brake horsepower |
| BIF | boiler and industrial furnace |
| BLS | black liquor solids |
| CC | confidence coefficient |
| CD | calibration drift |
| CE | calibration error |
| CEM | continuous emissions monitor |
| CEMS | continuous emissions monitoring system |
| CERMS | continuous emissions rate monitoring system |
| CET | calibration error test |
| CFR | Code of Federal Regulations |
| CGA | cylinder gas audit |
| CHNOS | elemental analysis for determination of C, H, N, O, and S content in fuels |
| CNCG | concentrated non-condensable gas |
| CO | catalytic oxidizer |
| COC | chain of custody |
| COMS | continuous opacity monitoring system |
| CPM | condensable particulate matter |
| CPMS | continuous parameter monitoring system |
| CT | combustion turbine |
| CTM | conditional test method |
| CTO | catalytic thermal oxidizer |
| CVAAS | cold vapor atomic absorption spectroscopy |
| $D_e$ | equivalent diameter |
| DE | destruction efficiency |
| Dioxins | polychlorinated dibenzo-p-dioxins (PCDDs) |
| DLL | detection level limited |
| DNCG | dilute non-condensable gas |
| ECD | electron capture detector |
| EIT | Engineer In Training |
| ELCD | electrolytic conductivity detector (hall detector) |
| EMPC | estimated maximum possible concentration |
| EPA | US Environmental Protection Agency |
| EPRI | Electric Power Research Institute |
| ES | emission standard (applicable limit) |
| ESP | electrostatic precipitator |
| EU | emission unit |
| FCCU | fluid catalytic cracking unit |
| FGD | flue gas desulfurization |
| FI | flame ionization |
| FIA | flame ionization analyzer |
| FID | flame ionization detector |
| FPD | flame photometric detector |
| FPM | filterable particulate matter |

## ABBREVIATIONS

| | |
|---|---|
| FTIR | Fourier-transform infrared spectroscopy |
| FTPB | field train proof blank |
| FTRB | field train recovery blank |
| Furans | polychlorinated dibenzofurans (PCDFs) |
| GC | gas chromatography |
| GC/MS | gas chromatography/mass spectroscopy |
| GFAAS | graphite furnace atomic absorption spectroscopy |
| GFC | gas filter correlation |
| GHG | greenhouse gas |
| HAP | hazardous air pollutant |
| HC | hydrocarbons |
| HHV | higher heating value |
| HPLC | high performance liquid chromatography |
| HRGC/HRMS | high-resolution gas chromatography/high-resolution mass spectroscopy |
| HRSG | heat recovery steam generator |
| IC | ion chromatography |
| ICAP | inductively-coupled argon plasma emission spectroscopy |
| ICPCR | ion chromatography with a post-column reactor |
| ICP-MS | inductively coupled plasma-mass spectroscopy |
| IR | infrared radiation |
| ISO | International Standards Organization |
| kW | kilowatts |
| LFG | landfill gas |
| LHV | lower heating value |
| LPG | liquified petroleum gas |
| MACT | maximum achievable control technology |
| MDI | methylene diphenyl diisocyanate |
| MDL | method detection limit |
| MNOC | maximum normal operating conditions |
| MRL | method reporting limit |
| MS | mass spectrometry |
| NA | not applicable or not available |
| NCASI | National Council For Air And Steam Improvement |
| NCG | non-condensable gases |
| ND | not detected |
| NDIR | non-dispersive infrared |
| NESHAP | National Emissions Standards For Hazardous Air Pollutants |
| NG | natural gas |
| NIOSH | National Institute For Occupational Safety And Health |
| NIST | National Institute Of Standards And Technology |
| NMC | non-methane cutter |
| NMOC | non-methane organic compounds |
| NMVOC | non-methane volatile organic compounds |
| NPD | nitrogen phosphorus detector |
| NSPS | New Source Performance Standards |
| OSHA | Occupational Safety And Health Administration |
| PAH | polycyclic aromatic hydrocarbons |
| PCB | polychlorinated biphenyl compounds |
| PCWP | plywood and composite wood products |
| PE | Professional Engineer |
| PFAS | per- and polyfluoroalkyl substances (PFAS) |
| PI | photoionization |
| PID | photoionization detector |
| PM | particulate matter |

## ABBREVIATIONS

| | |
|---|---|
| $PM_{10}$ | particulate matter less than 10 microns in aerodynamic diameter |
| $PM_{2.5}$ | particulate matter less than 2.5 microns in aerodynamic diameter |
| POM | polycyclic organic matter |
| PS | performance specification |
| PSD | particle size distribution |
| PSEL | plant site emission limits |
| PST | performance specification test |
| PTE | permanent total enclosure |
| PTM | performance test method |
| QA/QC | quality assurance and quality control |
| QI | Qualified Individual |
| QSTI | Qualified Source Testing Individual |
| RA | relative accuracy |
| RAA | relative accuracy audit |
| RACT | reasonably available control technology |
| RATA | relative accuracy test audit |
| RCTO | rotary concentrator thermal oxidizer |
| RICE | stationary reciprocating internal combustion engine |
| RM | reference method |
| RTO | regenerative thermal oxidizer |
| SAM | sulfuric acid mist |
| SCD | sulfur chemiluminescent detector |
| SCR | selective catalytic reduction system |
| SD | standard deviation |
| Semi-VOST | semi-volatile organic compounds sample train |
| SRM | standard reference material |
| TAP | toxic air pollutant |
| TBD | to be determined |
| TCA | thermal conductivity analyzer |
| TCD | thermal conductivity detector |
| TGNENMOC | total gaseous non-ethane non-methane organic compounds |
| TGNMOC | total gaseous non-methane organic compounds |
| TGOC | total gaseous organic compounds |
| THC | total hydrocarbons |
| TIC | tentatively identified compound |
| TO | thermal oxidizer |
| TO | toxic organic (as in EPA Method TO-15) |
| TPM | total particulate matter |
| TSP | total suspended particulate matter |
| TTE | temporary total enclosure |
| ULSD | ultra-low sulfur diesel |
| UV | ultraviolet radiation range |
| VE | visible emissions |
| VOC | volatile organic compounds |
| VOST | volatile organic sample train |
| WC | water column |
| WWTP | waste water treatment plant |

## CHEMICAL NOMENCLATURE

| | |
|---|---|
| Ag | silver |
| As | arsenic |
| Ba | barium |
| Be | beryllium |
| C | carbon |
| Cd | cadmium |
| CdS | cadmium sulfide |
| $CH_2O$ | formaldehyde |
| $CH_3CHO$ | acetaldehyde |
| $CH_3OH$ | methanol |
| $CH_4$ | methane |
| $C_2H_4O$ | ethylene oxide |
| $C_2H_6$ | ethane |
| $C_3H_4O$ | acrolein |
| $C_3H_6O$ | propionaldehyde |
| $C_3H_8$ | propane |
| $C_6H_5OH$ | phenol |
| $Cl_2$ | chlorine |
| $ClO_2$ | chlorine dioxide |
| CO | carbon monoxide |
| Co | cobalt |
| $CO_2$ | carbon dioxide |
| Cr | chromium |
| Cu | copper |
| EtO | ethylene oxide |
| EtOH | ethyl alcohol (ethanol) |
| $H_2$ | hydrogen |
| $H_2O$ | water |
| $H_2O_2$ | hydrogen peroxide |
| $H_2S$ | hydrogen sulfide |
| $H_2SO_4$ | sulfuric acid |
| HCl | hydrogen chloride |
| Hg | mercury |
| IPA | isopropyl alcohol |
| MDI | methylene diphenyl diisocyanate |
| $MeCl_2$ | methylene chloride |
| MEK | methyl ethyl ketone |
| MeOH | methanol |
| Mn | manganese |
| $N_2$ | nitrogen |
| $NH_3$ | ammonia |
| Ni | nickel |
| NO | nitric oxide |
| $NO_2$ | nitrogen dioxide |
| $NO_x$ | nitrogen oxides |
| $O_2$ | oxygen |
| P | phosphorus |
| Pb | lead |
| PCDD | polychlorinated dibenzo-p-dioxins |
| PCDF | polychlorinated dibenzofurans |
| Sb | antimony |
| Se | selenium |
| $SO_2$ | sulfur dioxide |
| $SO_3$ | sulfur trioxide |
| $SO_x$ | sulfur oxides |
| TCDD | tetrachlorodibenzodioxin |
| TCDF | tetrachlorodibenzofuran |
| TGOC | total gaseous organic concentration |
| THC | total hydrocarbons |
| Tl | thallium |
| TRS | total reduced sulfur compounds |
| Zn | zinc |

# Appendix D.2
# Manual Test Method QA/QC Data

# EPA Method 5

## Meter Box Calibration by Calibrated Critical Orifice, Leak Check, and Thermocouple Calibration Check

## English Meter Box Units, English K' Factor

| | |
|---|---|
| **Meter box ID:** | MB31 |
| **Meter ID (if applicable):** | METER ID |
| **Orifice set ID:** | TV1 |
| **Calibrated by:** | JH |
| **Expires:** | **8/17/23** |

| | |
|---|---|
| **Date:** | 2/17/23 |
| **Location:** | Portland |
| **No. of orifices used (min. 3)** | 3 |
| **Barometric pressure (in. Hg):** | 30.30 in. Hg |
| **Theoretical critical vacuum** | 14.29 in. Hg |

| | |
|---|---|
| **Yd:** | **0.9953** |
| **ΔH@:** | **1.8507** |

## Meter Box Orifice Calibration

IMPORTANT For valid test results, the Actual Vacuum should be 1 to 2 in. Hg greater than the Theoretical Critical Vacuum shown above
IMPORTANT The Critical Orifice Coefficient, K', must be entered in English units, (ft)^3*(deg R)^0.5/((in.Hg)*(min)).

| | | Volume | | | Initial Temps. | | Final Temps. | | Orifice | K' Orifice | | -- Ambient Temperature -- | | |
|---|---|---|---|---|---|---|---|---|---|---|---|---|---|---|
| ΔH (in H2O) | Time (min) | Initial (cu ft) | Final (cu ft) | Net (cu ft) | Inlet (deg F) | Outlet (deg F) | Inlet (deg F) | Outlet (deg F) | Serial# (number) | Coefficient (see above) | Vacuum (in Hg) | Initial (deg F) | Final (deg F) | Average (deg F) |
| 0.46 | 30.50 | 25.350 | 36.730 | 11.380 | XX | 63 | XX | 65 | 51 | 0.2921 | 23.0 | 75 | 77 | 76.0 |
| 0.80 | 16.00 | 14.360 | 22.250 | 7.890 | XX | 61 | XX | 62 | 56 | 0.3820 | 21.0 | 77 | 79 | 78.0 |
| 2.30 | 10.00 | 3.450 | 11.605 | 8.155 | XX | 60 | XX | 65 | 65 | 0.6369 | 19.0 | 71 | 74 | 72.5 |

--- SAMPLE RATE ---
INDICATED VS. ACTUAL

| ΔH (in. H2O) | Sample Rate (scfm) |
|---|---|
| 0.46 | 0.382 |
| 0.80 | 0.499 |
| 2.30 | 0.836 |

--- DRY GAS METER ---
VOLUME CORRECTED

| Vm(std) (cu ft) |
|---|
| 11.621 |
| 8.102 |
| 8.389 |

-------- ORIFICE --------

| VOLUME CORRECTED Vcr(std) (cu ft) | VOLUME NOMINAL Vcr (cu ft) |
|---|---|
| 11.661 | 11.694 |
| 7.984 | 8.036 |
| 8.363 | 8.332 |

-- DRY GAS METER --
CALIBRATION FACTOR Yd

| Value (number) | Variation (number) |
|---|---|
| 1.0035 | 0.008 |
| 0.9854 | -0.010 |
| 0.9969 | 0.002 |

-------- ORIFICE --------
CALIBRATION FACTOR ΔH@

| Value (in H2O) | Variation (in H2O) |
|---|---|
| 1.806 | -0.045 |
| 1.853 | 0.002 |
| 1.893 | 0.042 |

For Calibration Factor Y, the ratio of the reading of the calibration meter to the dry gas meter, acceptable tolerance of individual values from the average is +/-0.02.

For Orifice Calibration Factor ΔH@, the orifice differential pressure in inches of H20 that equates to 0.75 cfm of air at 68 F and 29.92 inches of Hg, acceptable tolerance of individual values from the average is +/-0.2.

| **QA Criteria:** | |
|---|---|
| Average Yd | 0.9953 |
| Average ΔH@ | 1.8507 |
| Variation of Yd's | PASS |
| Variation of ΔH@ | PASS |
| Vacuum Criteria | PASS |

## Meter Box Pressure Leak Check

| | | |
|---|---|---|
| Test Pressure, (in $H_2O$): | 7 | Should be 5-7 in. $H_2O$ |
| **Leak Rate, (in $H_2O$/min):** | 0 | Must be zero (manometer level stable for 1 minute) |

## Meter Box Vacuum Leak Check

| | | |
|---|---|---|
| Test Vacuum, (in. Hg): | 27 | Coarse adjust valve fully open, fine adjust fully closed, sample inlet plugged |
| **Leak Rate, (cfm):** | 0 | Must be zero (meter dial stable for 1 minute) |

## Meter Box Thermocouple Readout Calibration Check

| Input Temperature | Allowable Temp. Dev.* |
|---|---|
| 25 | 7 |
| 75 | 8 |
| 125 | 9 |
| 250 | 11 |
| 300 | 11 |
| 350 | 12 |
| 400 | 13 |
| 500 | 14 |

| Stack | Probe | Filter | Exit | Aux. | Meter In | Meter Out |
|---|---|---|---|---|---|---|
| 26 | 25 | 26 | 25 | 27 | XX | 25 |
| 76 | 78 | 74 | 79 | 78 | XX | 75 |
| 125 | 129 | 127 | 126 | 126 | XX | 127 |
| 250 | 250 | 254 | | | | |
| 295 | 302 | 304 | | | | |
| 351 | | | | | | |
| 400 | | | | | | |
| 505 | | | | | | |

| Thermocouple simulator | |
|---|---|
| Make/Model: | ALTEK |
| Serial No. | 541 |
| Cal Date: | 1/12/2022 |

## Meter Thermocouple Calibration

| Ref. Temp | Allowable Temp. Dev.* | Meter In | Meter Out |
|---|---|---|---|
| 74 | 8 | 76 | 77 |
| 100 | 8 | 101 | 104 |

| Reference Thermometer | |
|---|---|
| Make/Model: | Traceable |
| Serial No. | 211072664 |
| Cal Date: | 12/14/2022 |

* Reading values must be within 1.5% of reference thermometer values (based on absolute temperature scale) for calibration to be acceptable.

Performed by: Name:_____ Signature_____ Date:_____

Approved by: Name:_____ Signature_____ Date:_____

# EPA Method 5

## Meter Box Calibration by Calibrated Critical Orifice: Post-Test, English Meter Box Units, English K' Factor

| | |
|---|---|
| **Meter box ID:** | MB31 |
| **Meter ID (if applicable):** | XXXX |
| **Orifice set ID:** | TV5 |
| **Calibrated by (initials):** | NK |
| **Current 6-month calibration Yd:** | 0.9953 |
| **Date of 6-month calibration:** | 2/17/23 |

| | |
|---|---|
| **Date:** | 5/26/23 |
| **Location:** | OFFICE |
| **No. of runs (default 3)** | 3 |
| **Barometric pressure (in. Hg):** | 29.82 in. Hg |
| **Theoretical critical vacuum:** | 14.07 in. Hg |

| | |
|---|---|
| **Current Cal. Yd:** | **0.9953** |
| **Post-test Yd:** | **1.0042** |
| **Post-test Result:** | **PASS** |

## Meter Box Orifice Calibration

IMPORTANT For valid test results, the Actual Vacuum should be 1 to 2 in. Hg greater than the Theoretical Critical Vacuum shown above
IMPORTANT The Critical Orifice Coefficient, K', must be entered in English units, (ft)^3*(deg R)^0.5/((in.Hg)*(min)).

| | | Volume | | | Initial Temps. | | Final Temps. | | Orifice | K' Orifice | | -- Ambient Temperature -- | | |
|---|---|---|---|---|---|---|---|---|---|---|---|---|---|---|
| ΔH (in H2O) | Time (min) | Initial (cu ft) | Final (cu ft) | Net (cu ft) | Inlet (deg F) | Outlet (deg F) | Inlet (deg F) | Outlet (deg F) | Serial# (number) | Coefficient (see above) | Vacuum (in Hg) | Initial (deg F) | Final (deg F) | Average (deg F) |
| 1.40 | 11.00 | 329.294 | 336.353 | 7.059 | XX | 88 | XX | 88 | 18 | 0.48186 | 20.5 | 78 | 78 | 78.0 |
| 1.40 | 11.00 | 336.353 | 343.364 | 7.011 | XX | 87 | XX | 87 | 18 | 0.48186 | 20.5 | 78 | 79 | 78.5 |
| 1.40 | 11.00 | 343.364 | 350.378 | 7.014 | XX | 86 | XX | 85 | 18 | 0.48186 | 20.5 | 79 | 78 | 78.5 |

--- SAMPLE RATE ---
INDICATED VS. ACTUAL

| ΔH (in. H2O) | Sample Rate (scfm) |
|---|---|
| 1.40 | 0.62 |
| 1.40 | 0.62 |
| 1.40 | 0.62 |

--- DRY GAS METER ---
VOLUME CORRECTED

| Vm(std) (cu ft) |
|---|
| 6.799 |
| 6.765 |
| 6.787 |

--------- ORIFICE ---------

| VOLUME CORRECTED Vcr(std) (cu ft) | VOLUME NOMINAL Vcr (cu ft) |
|---|---|
| 6.814 | 6.970 |
| 6.811 | 6.973 |
| 6.811 | 6.973 |

-- DRY GAS METER --
CALIBRATION FACTOR Yd

| Value (number) | Variation (number) |
|---|---|
| 1.0022 | -0.002 |
| 1.0068 | 0.003 |
| 1.0036 | -0.001 |

--------- ORIFICE ---------
CALIBRATION FACTOR ΔH@

| Value (in H2O) | Variation (in H2O) |
|---|---|
| 1.97 | -0.005 |
| 1.98 | 0.000 |
| 1.98 | 0.005 |

For Calibration Factor Y, the ratio of the reading of the calibration meter to the dry gas meter, acceptable tolerance of individual values from the average is +/-0.02.

For Orifice Calibration Factor ΔH@, the orifice differential pressure in inches of H20 that equates to 0.75 cfm of air at 68 F and 29.92 inches of Hg, acceptable tolerance of individual values from the average is +/-0.2.

| **QA Criteria:** | |
|---|---|
| Average Yd | 1.0042 |
| Average ΔH@ | 1.9759 |
| Variation of Yd's | PASS |
| Variation of ΔH@ | PASS |
| Vacuum Criteria | PASS |

## Meter Box Vacuum Leak Check

| | | |
|---|---|---|
| Test Vacuum, (in. Hg): | XX | Coarse adjust valve fully open, fine adjust fully closed, sample inlet plugged |
| **Leak Rate, (cfm):** | XX | Must be zero (meter dial stable for 1 minute) |

Performed by: Name: Noah Kessler Signature: Noah Kessler Date: 5-26-23

Approved by: Name: Chace Fleming Signature: [signature] Date: 5/24/23

Meter box post-test calibration form (orifices) R4

MONTROSE
ENVIRONMENTAL

# EPA Method 5
## Meter Box Calibration by Calibrated Critical Orifice, Leak Check, and Thermocouple Calibration Check
## English Meter Box Units, English K' Factor

| | |
|---|---|
| **Meter box ID:** | MB30 |
| **Meter ID (if applicable):** | METER ID |
| **Orifice set ID:** | TV5 |
| **Calibrated by:** | AG |
| **Expires:** | 11/22/23 |

| | |
|---|---|
| **Date:** | 5/22/23 |
| **Location:** | Portland |
| **No. of orifices used (min. 3)** | 3 |
| **Barometric pressure (in. Hg):** | 30.22 in. Hg |
| **Theoretical critical vacuum** | 14.25 in. Hg |

| | |
|---|---|
| **Yd:** | **0.9801** |
| **ΔH@:** | **1.8727** |

## Meter Box Orifice Calibration

IMPORTANT For valid test results, the Actual Vacuum should be 1 to 2 in. Hg greater than the Theoretical Critical Vacuum shown above
IMPORTANT The Critical Orifice Coefficient, K', must be entered in English units, (ft)^3*(deg R)^0.5/((in.Hg)*(min)).

| | | Volume | | | Initial Temps. | | Final Temps. | | Orifice | K' Orifice | | – Ambient Temperature – | | |
|---|---|---|---|---|---|---|---|---|---|---|---|---|---|---|
| ΔH (in H2O) | Time (min) | Initial (cu ft) | Final (cu ft) | Net (cu ft) | Inlet (deg F) | Outlet (deg F) | Inlet (deg F) | Outlet (deg F) | Serial# (number) | Coefficient (see above) | Vacuum (in Hg) | Initial (deg F) | Final (deg F) | Average (deg F) |
| 1.30 | 10.00 | 474.368 | 480.784 | 6.416 | XX | 71 | XX | 70 | 18 | 0.4819 | 21.0 | 68 | 68 | 68.0 |
| 0.57 | 15.00 | 481.164 | 487.328 | 6.164 | XX | 70 | XX | 73 | 12 | 0.3102 | 23.0 | 68 | 68 | 68.0 |
| 2.20 | 7.00 | 493.783 | 499.637 | 5.854 | XX | 73 | XX | 74 | 24 | 0.6209 | 18.0 | 68 | 68 | 68.0 |

— SAMPLE RATE —
INDICATED VS. ACTUAL

| ΔH (in. H2O) | Sample Rate (scfm) |
|---|---|
| 1.30 | 0.634 |
| 0.57 | 0.408 |
| 2.20 | 0.817 |

— DRY GAS METER —
VOLUME CORRECTED

| Vm(std) (cu ft) |
|---|
| 6.468 |
| 6.191 |
| 5.881 |

—— ORIFICE ——

| VOLUME CORRECTED Vcr(std) (cu ft) | VOLUME NOMINAL Vcr (cu ft) |
|---|---|
| 6.337 | 6.277 |
| 6.120 | 6.062 |
| 5.716 | 5.661 |

– DRY GAS METER –
CALIBRATION FACTOR Yd

| Value (number) | Variation (number) |
|---|---|
| 0.9798 | 0.000 |
| 0.9886 | 0.008 |
| 0.9719 | -0.008 |

—— ORIFICE ——
CALIBRATION FACTOR ΔH@

| Value (in H2O) | Variation (in H2O) |
|---|---|
| 1.830 | -0.042 |
| 1.932 | 0.060 |
| 1.855 | -0.017 |

For Calibration Factor Y, the ratio of the reading of the calibration meter to the dry gas meter, acceptable tolerance of individual values from the average is +/-0.02.

For Orifice Calibration Factor ΔH@, the orifice differential pressure in inches of H20 that equates to 0.75 cfm of air at 68 F and 29.92 inches of Hg, acceptable tolerance of individual values from the average is +/-0.2.

| **QA Criteria:** | |
|---|---|
| Average Yd | 0.9801 |
| Average ΔH@ | 1.8727 |
| Variation of Yd's | PASS |
| Variation of ΔH@ | PASS |
| Vacuum Criteria | PASS |

## Meter Box Pressure Leak Check

| | | |
|---|---|---|
| Test Pressure, (in $H_2O$): | 6 | Should be 5-7 in. $H_2O$ |
| **Leak Rate, (in $H_2O$/min):** | 0 | Must be zero (manometer level stable for 1 minute) |

## Meter Box Vacuum Leak Check

| | | |
|---|---|---|
| Test Vacuum, (in. Hg): | 28 | Coarse adjust valve fully open, fine adjust fully closed, sample inlet plugged |
| **Leak Rate, (cfm):** | 0 | Must be zero (meter dial stable for 1 minute) |

## Meter Box Thermocouple Readout Calibration Check

| Input Temperature | Allowable Temp. Dev.* |
|---|---|
| 25 | 7 |
| 75 | 8 |
| 125 | 9 |
| 175 | 10 |
| 250 | 11 |
| 300 | 11 |
| 400 | 13 |
| 500 | 14 |

| Stack | Probe | Filter | Exit | Aux. | Meter In | Meter Out |
|---|---|---|---|---|---|---|
| 26 | 27 | 27 | 28 | 26 | XX | 26 |
| 77 | 75 | 74 | 77 | 76 | XX | 75 |
| 126 | 127 | 128 | 126 | 128 | XX | 127 |
| 178 | 176 | 178 | | | | |
| 252 | 249 | 251 | | | | |
| 302 | | | | | | |
| 402 | | | | | | |
| 501 | | | | | | |

| Thermocouple simulator | |
|---|---|
| Make/Model: | ALTEK |
| Serial No. | 541 |
| Cal Date: | 1/19/2023 |

## Meter Thermocouple Calibration

| Ref. Temp | Allowable Temp. Dev.* | Meter In | Meter Out |
|---|---|---|---|
| 65 | 8 | 66 | 67 |
| 78 | 8 | 78 | 79 |

| Reference Thermometer | |
|---|---|
| Make/Model: | Traceable |
| Serial No. | 211072647 |
| Cal Date: | 12/14/2022 |

* Reading values must be within 1.5% of reference thermometer values (based on absolute temperature scale) for calibration to be acceptable.

Performed by: Name: Austin Goracke Signature _____ Date: 5/22/23

Approved by: Name: JM Signature _____ Date: 5/22/23

MONTROSE ENVIRONMENTAL

# EPA Method 5

## Meter Box Calibration by Calibrated Critical Orifice: Post-Test, English Meter Box Units, English K' Factor

| | |
|---|---|
| **Meter box ID:** | MB30 |
| **Meter ID (if applicable):** | XXXX |
| **Orifice set ID:** | TV5 |
| **Calibrated by (initials):** | AG |
| **Current 6-month calibration Yd:** | 0.9801 |
| **Date of 6-month calibration:** | 5/22/23 |

| | |
|---|---|
| **Date:** | 5/26/23 |
| **Location:** | Portland |
| **No. of runs (default 3)** | 3 |
| **Barometric pressure (in. Hg):** | 29.92 in. Hg |
| **Theoretical critical vacuum:** | 14.11 in. Hg |

| | |
|---|---|
| **Current Cal. Yd:** | **0.9801** |
| **Post-test Yd:** | **0.9841** |
| **Post-test Result:** | **PASS** |

## Meter Box Orifice Calibration

IMPORTANT For valid test results, the Actual Vacuum should be 1 to 2 in. Hg greater than the Theoretical Critical Vacuum shown above
IMPORTANT The Critical Orifice Coefficient, K', must be entered in English units, (ft)^3*(deg R)^0.5/((in.Hg)*(min)).

| | | Volume | | | Initial Temps. | | Final Temps. | | | | | -- Ambient Temperature -- | | |
|---|---|---|---|---|---|---|---|---|---|---|---|---|---|---|
| ΔH (in H2O) | Time (min) | Initial (cu ft) | Final (cu ft) | Net (cu ft) | Inlet (deg F) | Outlet (deg F) | Inlet (deg F) | Outlet (deg F) | Orifice Serial# (number) | K' Orifice Coefficient (see above) | Vacuum (in Hg) | Initial (deg F) | Final (deg F) | Average (deg F) |
| 1.30 | 15.00 | 835.537 | 845.151 | 9.614 | XX | 73 | XX | 76 | 18 | 0.4819 | 21.0 | 75 | 76 | 75.4 |
| 1.30 | 26.00 | 845.151 | 861.798 | 16.647 | XX | 76 | XX | 79 | 18 | 0.4819 | 21.0 | 76 | 77 | 76.8 |
| 1.30 | 18.00 | 861.798 | 873.375 | 11.577 | XX | 79 | XX | 80 | 18 | 0.4819 | 21.0 | 77 | 80 | 78.7 |

— SAMPLE RATE —
INDICATED VS. ACTUAL

| ΔH (in. H2O) | Sample Rate (scfm) |
|---|---|
| 1.30 | 0.62 |
| 1.30 | 0.62 |
| 1.30 | 0.62 |

-- DRY GAS METER --
VOLUME CORRECTED

| Vm(std) (cu ft) |
|---|
| 9.524 |
| 16.398 |
| 11.362 |

------- ORIFICE -------

| VOLUME CORRECTED Vcr(std) (cu ft) | VOLUME NOMINAL Vcr (cu ft) |
|---|---|
| 9.346 | 9.481 |
| 16.180 | 16.454 |
| 11.182 | 11.412 |

-- DRY GAS METER --
CALIBRATION FACTOR Yd

| Value (number) | Variation (number) |
|---|---|
| 0.9814 | -0.003 |
| 0.9867 | 0.003 |
| 0.9841 | 0.000 |

------- ORIFICE -------
CALIBRATION FACTOR ΔH@

| Value (in H2O) | Variation (in H2O) |
|---|---|
| 1.86 | 0.004 |
| 1.85 | -0.002 |
| 1.85 | -0.002 |

For Calibration Factor Y, the ratio of the reading of the calibration meter to the dry gas meter, acceptable tolerance of individual values from the average is +/-0.02.

For Orifice Calibration Factor ΔH@, the orifice differential pressure in inches of H20 that equates to 0.75 cfm of air at 68 F and 29.92 inches of Hg, acceptable tolerance of individual values from the average is +/-0.2.

| QA Criteria: | |
|---|---|
| Average Yd | 0.9841 |
| Average ΔH@ | 1.8567 |
| Variation of Yd's | PASS |
| Variation of ΔH@ | PASS |
| Vacuum Criteria | PASS |

## Meter Box Vacuum Leak Check

| | | |
|---|---|---|
| Test Vacuum, (in. Hg): | 27 | Coarse adjust valve fully open, fine adjust fully closed, sample inlet plugged |
| **Leak Rate, (cfm):** | 0 | Must be zero (meter dial stable for 1 minute) |

Performed by: Name: Austin Goracke Signature _____ Date: 5/26/23

Approved by: Name: Chase Fleming Signature _____ Date: 5/26/23

Meter box post-test calibration form (orifices) R3

MONTROSE ENVIRONMENTAL

# EPA Method 5
## Meter Box Calibration by Calibrated Critical Orifice, Leak Check, and Thermocouple Calibration Check
## English Meter Box Units, English K' Factor

| | |
|---|---|
| **Meter box ID:** | MB 24 |
| **Meter ID (if applicable):** | MB 24 |
| **Orifice set ID:** | TV5 |
| **Calibrated by:** | NW |
| **Expires:** | 11/22/23 |

| | |
|---|---|
| **Date:** | 5/22/23 |
| **Location:** | Portland |
| **No. of orifices used (min. 3)** | 3 |
| **Barometric pressure (in. Hg):** | 30.22 in. Hg |
| **Theoretical critical vacuum** | 14.25 in. Hg |

| | |
|---|---|
| **Yd:** | **0.9898** |
| **ΔH@:** | **1.6698** |

## Meter Box Orifice Calibration

IMPORTANT For valid test results, the Actual Vacuum should be 1 to 2 in. Hg greater than the Theoretical Critical Vacuum shown above
IMPORTANT The Critical Orifice Coefficient, K', must be entered in English units, (ft)^3*(deg R)^0.5/((in.Hg)*(min)).

| ΔH (in H2O) | Time (min) | Volume Initial (cu ft) | Volume Final (cu ft) | Volume Net (cu ft) | Initial Temps. Inlet (deg F) | Initial Temps. Outlet (deg F) | Final Temps. Inlet (deg F) | Final Temps. Outlet (deg F) | Orifice Serial# (number) | K' Orifice Coefficient (see above) | Vacuum (in Hg) | Ambient Temperature Initial (deg F) | Ambient Temperature Final (deg F) | Ambient Temperature Average (deg F) |
|---|---|---|---|---|---|---|---|---|---|---|---|---|---|---|
| 0.47 | 13.00 | 290.400 | 295.740 | 5.340 | NA | 77.0 | NA | 77.0 | 12 | 0.3102 | 24.0 | 68.0 | 68.0 | 68.0 |
| 1.20 | 8.00 | 296.200 | 301.325 | 5.125 | NA | 78.0 | NA | 79.0 | 18 | 0.4819 | 22.0 | 68.0 | 68.0 | 68.0 |
| 3.50 | 5.00 | 301.700 | 307.115 | 5.415 | NA | 80.0 | NA | 82.0 | 31 | 0.7967 | 17.0 | 68.0 | 68.0 | 68.0 |

--- SAMPLE RATE ---
INDICATED VS. ACTUAL

| ΔH (in. H2O) | Sample Rate (scfm) |
|---|---|
| 0.47 | 0.408 |
| 1.20 | 0.634 |
| 3.50 | 1.048 |

--- DRY GAS METER ---
VOLUME CORRECTED

| Vm(std) (cu ft) |
|---|
| 5.307 |
| 5.088 |
| 5.381 |

-------- ORIFICE --------

| VOLUME CORRECTED Vcr(std) (cu ft) | VOLUME NOMINAL Vcr (cu ft) |
|---|---|
| 5.304 | 5.254 |
| 5.070 | 5.021 |
| 5.239 | 5.189 |

-- DRY GAS METER --
CALIBRATION FACTOR Yd

| Value (number) | Variation (number) |
|---|---|
| 0.9995 | 0.010 |
| 0.9964 | 0.007 |
| 0.9735 | -0.016 |

-------- ORIFICE --------
CALIBRATION FACTOR ΔH@

| Value (in H2O) | Variation (in H2O) |
|---|---|
| 1.577 | -0.093 |
| 1.664 | -0.005 |
| 1.768 | 0.098 |

For Calibration Factor Y, the ratio of the reading of the calibration meter to the dry gas meter, acceptable tolerance of individual values from the average is +/-0.02.

For Orifice Calibration Factor ΔH@, the orifice differential pressure in inches of H20 that equates to 0.75 cfm of air at 68 F and 29.92 inches of Hg, acceptable tolerance of individual values from the average is +/-0.2.

| QA Criteria: | |
|---|---|
| Average Yd | 0.9898 |
| Average ΔH@ | 1.6698 |
| Variation of Yd's | PASS |
| Variation of ΔH@ | PASS |
| Vacuum Criteria | PASS |

## Meter Box Pressure Leak Check

| | | |
|---|---|---|
| Test Pressure, (in $H_2O$): | 7 | Should be 5-7 in. $H_2O$ |
| **Leak Rate, (in $H_2O$/min):** | 0 | Must be zero (manometer level stable for 1 minute) |

## Meter Box Vacuum Leak Check

| | | |
|---|---|---|
| Test Vacuum, (in. Hg): | 5 | Coarse adjust valve fully open, fine adjust fully closed, sample inlet plugged |
| **Leak Rate, (cfm):** | 0 | Must be zero (meter dial stable for 1 minute) |

## Meter Box Thermocouple Readout Calibration Check

| Input Temperature | Allowable Temp. Dev.* |
|---|---|
| 25 | 7 |
| 75 | 8 |
| 125 | 9 |
| 175 | 10 |
| 250 | 11 |
| 300 | 11 |
| 400 | 13 |
| 500 | 14 |

| Stack | Probe | Filter | Exit | Aux. | Meter In | Meter Out |
|---|---|---|---|---|---|---|
| 28 | 28 | 27 | 28 | 28 | NA | 27 |
| 78 | 78 | 77 | 79 | 79 | NA | 76 |
| 128 | 128 | 127 | 128 | 129 | NA | 127 |
| 178 | 178 | 177 | | | | |
| 252 | 253 | 252 | | | | |
| 302 | | | | | | |
| 402 | | | | | | |
| 501 | | | | | | |

| Thermocouple simulator | |
|---|---|
| Make/Model: | Altek Series 22 |
| Serial No. | 542 |
| Cal Date: | 1/19/2023 |

## Meter Thermocouple Calibration

| Ref. Temp | Allowable Temp. Dev.* | Meter In | Meter Out |
|---|---|---|---|
| 34.1 | 7 | NA | 34 |
| 156.8 | 9 | NA | 156 |

| Reference Thermometer | |
|---|---|
| Make/Model: | Traceble |
| Serial No. | 211072647 |
| Cal Date: | 12/14/2022 |

* Reading values must be within 1.5% of reference thermometer values (based on absolute temperature scale) for calibration to be acceptable.

Performed by: Name: Chase Fluhr Signature: _____ Date: 5/22/23

Approved by: Name: QR Signature: _____ Date: 5/22/23

# EPA Method 5

## Meter Box Calibration by Calibrated Critical Orifice: Post-Test, English Meter Box Units, English K' Factor

| | |
|---|---|
| **Meter box ID:** | MB24 |
| **Meter ID (if applicable):** | XXXX |
| **Orifice set ID:** | TV5 |
| **Calibrated by (initials):** | AG |
| **Current 6-month calibration Yd:** | 0.9898 |
| **Date of 6-month calibration:** | 5/22/23 |

| | |
|---|---|
| **Date:** | 5/26/23 |
| **Location:** | Portland |
| **No. of runs (default 3)** | 3 |
| **Barometric pressure (in. Hg):** | 29.92 in. Hg |
| **Theoretical critical vacuum:** | 14.11 in. Hg |

| | |
|---|---|
| **Current Cal. Yd:** | **0.9898** |
| **Post-test Yd:** | **0.9806** |
| **Post-test Result:** | **PASS** |

## Meter Box Orifice Calibration

IMPORTANT For valid test results, the Actual Vacuum should be 1 to 2 in. Hg greater than the Theoretical Critical Vacuum shown above
IMPORTANT The Critical Orifice Coefficient, K', must be entered in English units, (ft)^3*(deg R)^0.5/((in.Hg)*(min)).

| | | Volume | | | Initial Temps. | | Final Temps. | | Orifice | K' Orifice | | -- Ambient Temperature -- | | |
|---|---|---|---|---|---|---|---|---|---|---|---|---|---|---|
| ΔH (in H2O) | Time (min) | Initial (cu ft) | Final (cu ft) | Net (cu ft) | Inlet (deg F) | Outlet (deg F) | Inlet (deg F) | Outlet (deg F) | Serial# (number) | Coefficient (see above) | Vacuum (in Hg) | Initial (deg F) | Final (deg F) | Average (deg F) |
| 0.51 | 20.00 | 49.884 | 58.321 | 8.437 | XX | 85 | XX | 86 | 12 | 0.3102 | 20.0 | 82 | 82 | 82.1 |
| 0.51 | 20.00 | 58.321 | 66.692 | 8.371 | XX | 85 | XX | 85 | 12 | 0.3102 | 24.0 | 85 | 82 | 83.5 |
| 0.51 | 17.00 | 66.692 | 73.795 | 7.103 | XX | 85 | XX | 86 | 12 | 0.3102 | 24.0 | 82 | 82 | 82.0 |

-- SAMPLE RATE --
INDICATED VS. ACTUAL

| ΔH (in. H2O) | Sample Rate (scfm) |
|---|---|
| 0.51 | 0.40 |
| 0.51 | 0.40 |
| 0.51 | 0.40 |

-- DRY GAS METER --
VOLUME CORRECTED

| Vm(std) (cu ft) |
|---|
| 8.173 |
| 8.117 |
| 6.881 |

------- ORIFICE -------

| VOLUME CORRECTED Vcr(std) (cu ft) | VOLUME NOMINAL Vcr (cu ft) |
|---|---|
| 7.974 | 8.190 |
| 7.963 | 8.200 |
| 6.778 | 6.961 |

-- DRY GAS METER --
CALIBRATION FACTOR Yd

| Value (number) | Variation (number) |
|---|---|
| 0.9756 | -0.005 |
| 0.9811 | 0.001 |
| 0.9850 | 0.004 |

------ ORIFICE ------
CALIBRATION FACTOR ΔH@

| Value (in H2O) | Variation (in H2O) |
|---|---|
| 1.75 | -0.002 |
| 1.75 | 0.004 |
| 1.75 | -0.002 |

For Calibration Factor Y, the ratio of the reading of the calibration meter to the dry gas meter, acceptable tolerance of individual values from the average is +/-0.02.

For Orifice Calibration Factor ΔH@, the orifice differential pressure in inches of H20 that equates to 0.75 cfm of air at 68 F and 29.92 inches of Hg, acceptable tolerance of individual values from the average is +/-0.2.

| QA Criteria: | |
|---|---|
| Average Yd | 0.9806 |
| Average ΔH@ | 1.7489 |
| Variation of Yd's | PASS |
| Variation of ΔH@ | PASS |
| Vacuum Criteria | PASS |

## Meter Box Vacuum Leak Check

| | | |
|---|---|---|
| Test Vacuum, (in. Hg): | 27 | Coarse adjust valve fully open, fine adjust fully closed, sample inlet plugged |
| **Leak Rate, (cfm):** | 0 | Must be zero (meter dial stable for 1 minute) |

Performed by: Name: Austin Goracke Signature _____ Date: 5/26/23

Approved by: Name: MG Signature _____ Date: 5/26/23

Meter box post-test calibration form (orifices) R3

| Set ID | | TV1 | | | | | | | | | | PDX in house | Job |
|---|---|---|---|---|---|---|---|---|---|---|---|---|---|
| DGM (Y) = | | 0.9978 | Fluke ID | 455/526 | | PLC | 0 | at | | 6 | in $H_2O$ | AG/CF | Calibrated |
| DGM ID # | | 19461089 | Std Manometer | 537 | | NLC | 0 | at | | 23 | in Hg | JH | QA/QC |
| Dry Gas Meter | | | Orifice ID # | 35 | Orifice ID # | 44 | Orifice ID # | 51 | Orifice ID # | 56 | Orifice ID # | 65 | |
| K' Critical Orifice Coefficient | | | | **0.17957** | | **0.29214** | | **0.38199** | | **0.47404** | | **0.63690** | |
| | Symbol | Units | Run 1 | Run 2 | Run 1 | Run 2 | Run 1 | Run 2 | Run 1 | Run 2 | Run 1 | Run 2 | |
| Initial volume | $V_i$ | ft³ | 656.197 | 664.131 | 669.734 | 676.200 | 684.132 | 689.578 | 695.044 | 701.228 | 708.037 | 714.700 | |
| Final Volume | $V_f$ | ft³ | 664.131 | 669.734 | 676.200 | 684.132 | 689.578 | 695.044 | 701.228 | 708.037 | 714.700 | 722.237 | |
| Difference | $V_m$ | ft³ | 7.934 | 5.603 | 6.466 | 7.932 | 5.446 | 5.466 | 6.184 | 6.809 | 6.663 | 7.537 | |
| Temperatures | | | | | | | | | | | | | |
| Ambient | $T_a$ | °F | 58.8 | 59.1 | 59.1 | 53.6 | 54.6 | 55.0 | 55.4 | 55.4 | 55.5 | 55.4 | |
| Absolute ambient | $T_a$ | °R | 518.47 | 518.77 | 518.77 | 513.27 | 514.27 | 514.67 | 515.07 | 515.07 | 515.17 | 515.07 | |
| | | | | | | | | | | | | | |
| Initial Inlet | $T_i$ | °F | 59.8 | 62.7 | 63.3 | 53.7 | 58.3 | 63.3 | 65 | 67.9 | 69.5 | 74.5 | |
| Outlet | $T_f$ | °F | 59.6 | 60.7 | 61.2 | 54.5 | 55.4 | 56.3 | 57.2 | 58.1 | 59 | 60 | |
| Final Inlet | $T_i$ | °F | 62.8 | 63.7 | 67.5 | 59.1 | 63.9 | 66.5 | 69.9 | 71.3 | 76.3 | 77.9 | |
| Outlet | $T_f$ | °F | 60.7 | 61.3 | 61.8 | 55.3 | 56.3 | 57.3 | 58.1 | 59 | 60.2 | 61.1 | |
| Avg. Temp | $T_m$ | °R | 520.395 | 521.77 | 523.12 | 515.32 | 518.145 | 520.52 | 522.22 | 523.745 | 525.92 | 528.045 | |
| Time | | min | 34 | 24 | 17 | 21 | 11 | 11 | 10 | 11 | 8 | 9 | |
| | | sec | | | | | | | | | | | |
| | | | 34.00 | 24.00 | 17.00 | 21.00 | 11.00 | 11.00 | 10.00 | 11.00 | 8.00 | 9.00 | |
| SAMPLE RATE | | ACFM | 0.2334 | 0.2335 | 0.3804 | 0.3777 | 0.4951 | 0.4969 | 0.6184 | 0.6190 | 0.8329 | 0.8374 | |
| Orifice man. rdg | dH@ | in $H_2O$ | 0.17 | 0.17 | 0.48 | 0.48 | 0.86 | 0.87 | 1.40 | 1.40 | 2.60 | 2.60 | |
| Barometric. Pressure | Pbar | inHg | 30.51 | 30.51 | 30.51 | 30.43 | 30.43 | 30.43 | 30.43 | 30.43 | 30.43 | 30.43 | |
| Pump vacuum | | inHg | 21.5 | 21.5 | 20.0 | 19.0 | 18.5 | 18.5 | 17.0 | 17.0 | 15.0 | 15.0 | |
| K' factor | | | 0.1797 | 0.1794 | 0.2917 | 0.2925 | 0.3821 | 0.3819 | 0.4745 | 0.4736 | 0.6365 | 0.6373 | |
| K' factor Average | | | | 0.1796 | | 0.2921 | | 0.3820 | | 0.4740 | | 0.6369 | |
| % Error (+/- 0.5) | | % | PASS | 0.095% | PASS | 0.137% | PASS | 0.025% | PASS | 0.097% | PASS | 0.067% | |

## Critical Orifice Calibration

| | | | | | | | | | | | | |
|---|---|---|---|---|---|---|---|---|---|---|---|---|
| Set ID | TV5 | | | | | | | | | | 5/1/23 Date<br>PDX in house Job | |
| DGM (Y) = | 0.9978 | | Fluke ID | 455 | | PLC | 0 at | | 6 in $H_2O$ | | | CF Calibrated |
| DGM ID # | 19461089 | | Std Manometer | 537 | | NLC | 0 at | | 22 in Hg | | | MW QA/QC |
| Dry Gas Meter | | | Orifice ID # | 12 | Orifice ID # | 16 | Orifice ID # | 18 | Orifice ID # | 24 | Orifice ID # | 31 |
| K' Critical Orifice Coefficient | | | | **0.31024** | | **0.41438** | | **0.48186** | | **0.62086** | | **0.79666** |
| | Symbol | Units | Run 1 | Run 2 | Run 1 | Run 2 | Run 1 | Run 2 | Run 1 | Run 2 | Run 1 | Run 2 |
| Initial volume | $V_i$ | $ft^3$ | 210.338 | 217.643 | 224.939 | 230.387 | 235.829 | 242.117 | 248.404 | 254.935 | 262.314 | 272.831 |
| Final Volume | $V_f$ | $ft^3$ | 217.643 | 224.939 | 230.387 | 235.829 | 242.117 | 248.404 | 254.935 | 262.314 | 272.831 | 282.321 |
| Difference | $V_m$ | $ft^3$ | 7.305 | 7.296 | 5.448 | 5.442 | 6.288 | 6.287 | 6.531 | 7.379 | 10.517 | 9.490 |
| Temperatures | | | | | | | | | | | | |
| Ambient | $T_a$ | °F | 68.7 | 69.6 | 69.2 | 69.6 | 63.3 | 63.8 | 64.2 | 64.9 | 64.5 | 65.1 |
| Absolute ambient | $T_a$ | °R | 528.37 | 529.27 | 528.87 | 529.27 | 522.97 | 523.47 | 523.87 | 524.57 | 524.17 | 524.77 |
| | | | | | | | | | | | | |
| Initial Inlet | $T_i$ | °F | 71.3 | 72.3 | 75.7 | 78.9 | 63.3 | 72.3 | 77.1 | 82.7 | 84.6 | 89.7 |
| Outlet | $T_f$ | °F | 67 | 67.3 | 68.3 | 69 | 63 | 63.9 | 65.1 | 66.5 | 67.7 | 69.5 |
| Final Inlet | $T_i$ | °F | 72.3 | 75.7 | 78.9 | 80.6 | 72.3 | 77.1 | 82.7 | 84.6 | 89.7 | 90.1 |
| Outlet | $T_f$ | °F | 67.3 | 68.3 | 69 | 69.6 | 63.9 | 65.1 | 66.5 | 67.7 | 69.5 | 70.7 |
| Avg. Temp | $T_m$ | °R | 529.145 | 530.57 | 532.645 | 534.195 | 525.295 | 529.27 | 532.52 | 535.045 | 537.545 | 539.67 |
| Time | | min | 18 | 18 | 10 | 10 | 10 | 10 | 8 | 9 | 10 | 9 |
| | | sec | 0 | 0 | 0 | 0 | 0 | 0 | 0 | 0 | 0 | 0 |
| | | | 18.00 | 18.00 | 10.00 | 10.00 | 10.00 | 10.00 | 8.00 | 9.00 | 10.00 | 9.00 |
| SAMPLE RATE | | ACFM | 0.4058 | 0.4053 | 0.5448 | 0.5442 | 0.6288 | 0.6287 | 0.8164 | 0.8199 | 1.0517 | 1.0544 |
| Orifice man. rdg | dH@ | in $H_2O$ | 0.65 | 0.65 | 1.20 | 1.20 | 1.60 | 1.60 | 2.20 | 2.20 | 4.50 | 4.50 |
| Barometric. Pressure | Pbar | inHg | 29.86 | 29.86 | 29.86 | 29.86 | 29.77 | 29.77 | 29.77 | 29.77 | 29.77 | 29.77 |
| Pump vacuum | | inHg | 20.0 | 20.0 | 18.5 | 18.5 | 17.0 | 17.0 | 15.0 | 15.0 | 12.5 | 12.5 |
| K' factor | | | 0.3107 | 0.3098 | 0.4151 | 0.4136 | 0.4836 | 0.4801 | 0.6208 | 0.6209 | 0.7970 | 0.7964 |
| K' factor Average | | | | 0.3102 | | 0.4144 | | 0.4819 | | 0.6209 | | 0.7967 |
| % Error (+/- 0.5) | | % | PASS | 0.154% | PASS | 0.181% | PASS | 0.361% | PASS | 0.012% | PASS | 0.038% |

# Secondary Standard Calibration

DATE: 5/19/2022 Operator: Joe Camodeca

| Meter Box No: | 19461089 | Meter Box H@: | 0.0000 | Meter Box Yd | 0.9978 | Barometric Pressure: | 29.69 |
|---|---|---|---|---|---|---|---|

| | | | | Standard Meter Gas Volume | | | Meter Box Gas Volume (ft‹ ) | | | Std. Meter Temperature (ÞF) | | | Meter Box Temperature (ÞF) | | | | | |
|---|---|---|---|---|---|---|---|---|---|---|---|---|---|---|---|---|---|---|
| Q | P | H | Yds | Initial | Final | Vf | Initial | Final | Vf | Inlet | Outlet | Avg. | Inlet | Outlet | Avg. | Time | Yd | H@ |
| 0.41 | -0.50 | 0.00 | 1.0000 | 0.0 | 5.100 | 5.100 | 186.200 | 191.316 | 5.116 | 69.4 | 69.4 | 69.4 | 70.0 | 70.0 | 70.0 | 12.18 | 0.9992 | 0.0000 |
| 0.41 | -0.50 | 0.00 | 1.0000 | 0.0 | 5.000 | 5.000 | 196.228 | 201.257 | 5.029 | 69.4 | 69.4 | 69.4 | 70.0 | 70.0 | 70.0 | 12.02 | 0.9966 | 0.0000 |
| 0.41 | -0.50 | 0.00 | 1.0000 | 0.0 | 5.000 | 5.000 | 201.257 | 206.280 | 5.023 | 69.4 | 69.4 | 69.4 | 70.0 | 70.0 | 70.0 | 12.00 | 0.9978 | 0.0000 |
| 0.62 | -0.60 | 0.00 | 1.0000 | 0.0 | 5.000 | 5.000 | 215.000 | 220.031 | 5.031 | 69.4 | 69.4 | 69.4 | 70.0 | 70.0 | 70.0 | 7.97 | 0.9964 | 0.0000 |
| 0.62 | -0.60 | 0.00 | 1.0000 | 0.0 | 5.000 | 5.000 | 220.031 | 225.040 | 5.009 | 69.4 | 69.4 | 69.4 | 70.0 | 70.0 | 70.0 | 7.93 | 1.0008 | 0.0000 |
| 0.62 | -0.60 | 0.00 | 1.0000 | 0.0 | 5.200 | 5.200 | 225.040 | 230.261 | 5.221 | 69.4 | 69.4 | 69.4 | 70.0 | 70.0 | 70.0 | 8.27 | 0.9986 | 0.0000 |
| 0.82 | -0.80 | 0.00 | 1.0000 | 0.0 | 5.000 | 5.000 | 237.100 | 242.130 | 5.030 | 69.4 | 69.4 | 69.4 | 70.0 | 70.0 | 70.0 | 6.00 | 0.9971 | 0.0000 |
| 0.82 | -0.80 | 0.00 | 1.0000 | 0.0 | 5.100 | 5.100 | 242.130 | 247.254 | 5.124 | 69.4 | 69.4 | 69.4 | 70.0 | 70.0 | 70.0 | 6.13 | 0.9984 | 0.0000 |
| 0.82 | -0.80 | 0.00 | 1.0000 | 0.0 | 5.000 | 5.000 | 247.254 | 252.280 | 5.026 | 69.4 | 69.4 | 69.4 | 70.0 | 70.0 | 70.0 | 6.00 | 0.9979 | 0.0000 |
| 0.98 | -0.90 | 0.00 | 1.0000 | 0.0 | 5.000 | 5.000 | 260.321 | 265.349 | 5.028 | 69.4 | 69.4 | 69.4 | 70.0 | 70.0 | 70.0 | 5.07 | 0.9978 | 0.0000 |
| 0.98 | -0.90 | 0.00 | 1.0000 | 0.0 | 5.000 | 5.000 | 265.349 | 270.377 | 5.028 | 69.4 | 69.4 | 69.4 | 70.0 | 70.0 | 70.0 | 5.07 | 0.9978 | 0.0000 |
| 0.98 | -0.90 | 0.00 | 1.0000 | 0.0 | 5.000 | 5.000 | 270.377 | 275.404 | 5.027 | 69.4 | 69.4 | 69.4 | 70.0 | 70.0 | 70.0 | 5.07 | 0.9980 | 0.0000 |
| 1.15 | -1.00 | 0.00 | 1.0000 | 0.0 | 5.000 | 5.000 | 276.200 | 281.246 | 5.046 | 69.4 | 69.4 | 69.4 | 70.0 | 70.0 | 70.0 | 4.30 | 0.9945 | 0.0000 |
| 1.15 | -1.00 | 0.00 | 1.0000 | 0.0 | 5.000 | 5.000 | 281.246 | 286.283 | 5.037 | 69.4 | 69.4 | 69.4 | 70.0 | 70.0 | 70.0 | 4.30 | 0.9962 | 0.0000 |
| 1.15 | -1.00 | 0.00 | 1.0000 | 0.0 | 5.000 | 5.000 | 286.283 | 291.300 | 5.017 | 69.4 | 69.4 | 69.4 | 70.0 | 70.0 | 70.0 | 4.30 | 1.0002 | 0.0000 |
| | | | | | | | | | | | | | | | AVERAGE | | 0.9978 | 0.0000 |

Millennium Instruments Inc.
2402 Springridge Drive unit I
Spring Grove IL. 60081
PHONE#(815)675-3225
FAX#(815)675-6965
E-mail millennium@millinst.com
www.millinst.com

Calibrated By: Joe Camodeca

Signature:

**Vacuum Gauge**

| (in. Hg) | Gauge |
|---|---|
| 5.0 | 5.0 |
| 10.0 | 10.0 |
| 15.0 | 15.0 |
| 20.0 | 20.0 |
| 25.0 | 25.0 |
| | |
| | |
| | |



W006AS-021372-RT-2857

MONTROSE ENVIRONMENTAL

# EPA Method 5 / 6

## Meter Box Calibration: Standard Meter, Leak Check, and Thermocouple Calibration Check

## Metric Meter Box Units

| | |
|---|---|
| **Meter Box ID:** | LFCB 10B |
| **Meter ID (if applicable):** | METER ID |
| **Standard meter ID:** | A2202096 |
| **Standard meter Y (if applicable):** | 1.0000 |
| **Calibrated by:** | QR |

| | |
|---|---|
| **Date:** | 05/24/23 |
| **Location:** | Portland |
| **No. of runs (min. 3):** | 3 |
| **Meter box units, sample rate indication** | liters, rotameter |
| **Standard meter units** | liters |
| **Barometric pressure (in. Hg):** | 30.06 in. Hg |

| | |
|---|---|
| **Yd:** | **0.9963** |
| **ΔH@:** | **#N/A** |
| **Expires:** | **11/24/2023** |

### Meter Box Calibration Using a Standard Reference Meter

| | | Dry Gas Meter | | | | | | | | Standard Meter | | | | | | | | | |
|---|---|---|---|---|---|---|---|---|---|---|---|---|---|---|---|---|---|---|---|
| | | Volume | | | Initial Temps. | | Final Temps. | | | Volume | | | Initial Temps. | | Final Temps. | | -- Ambient Temperature -- | | |
| Rotameter (liter / min) | Time (min) | Initial (liters) | Final (liters) | Net (liters) | Inlet (deg F) | Outlet (deg F) | Inlet (deg F) | Outlet (deg F) | Vacuum (in Hg) | Initial (liters) | Final (liters) | Net (liters) | Inlet (deg F) | Outlet (deg F) | Inlet (deg F) | Outlet (deg F) | Initial (deg F) | Final (deg F) | Average (deg F) |
| 0.50 | 7.00 | 0.000 | 5.493 | 5.493 | XX | 69 | XX | 70 | 0.5 | 0.000 | 5.457 | 5.457 | XX | 68 | XX | 68 | 68 | 69 | 68.5 |
| 0.80 | 7.00 | 0.000 | 7.756 | 7.756 | XX | 70 | XX | 71 | 1.0 | 0.000 | 7.700 | 7.700 | XX | 68 | XX | 68 | 69 | 69 | 69.0 |
| 1.00 | 4.00 | 0.000 | 5.477 | 5.477 | XX | 71 | XX | 71 | 1.5 | 0.000 | 5.420 | 5.420 | XX | 68 | XX | 68 | 69 | 69 | 69.0 |

------ SAMPLE RATE ------

INDICATED VS. ACTUAL

| Indicated (liter / min) | Actual (liter / min) |
|---|---|
| 0.500 | 0.783 |
| 0.800 | 1.105 |
| 1.000 | 1.361 |

— DRY GAS METER —

CORRECTED VOLUME

| Vm(std) (liters) |
|---|
| 5.501 |
| 7.752 |
| 5.469 |

— STANDARD METER —

CORRECTED VOLUME

| Vm(std) (liters) |
|---|
| 5.480 |
| 7.733 |
| 5.443 |

– DRY GAS METER –

CALIBRATION FACTOR

Yd

| Value (number) | Variation (number) |
|---|---|
| 0.9963 | 0.000 |
| 0.9975 | 0.001 |
| 0.9952 | -0.001 |

-- DRY GAS METER –

CALIBRATION FACTOR

ΔH@

| Value (number) | Variation (number) |
|---|---|
| #N/A | #N/A |
| #N/A | #N/A |
| #N/A | #N/A |

For Calibration Factor Y, the ratio of the reading of the calibration meter to the dry gas meter, acceptable tolerance of individual values from the average is +/-0.02.
For Orifice Calibration Factor ΔH@, the orifice differential pressure in inches of H20 that equates to 0.75 cfm of air at 68 F and 29.92 inches of Hg, acceptable tolerance of individual values from the average is +/-0.2.

| **QA Criteria:** | |
|---|---|
| Average Yd | 0.9963 |
| Average ΔH@ | #N/A |
| Variation of Yd's | PASS |
| Variation of ΔH@ | #N/A |

### Meter Box Pressure Leak Check

| | | |
|---|---|---|
| Test Pressure, (in $H_2O$): | 6 | Use separate manometer or similar, should be 5-7 in. $H_2O$ |
| **Leak Rate, (in $H_2O$/min):** | 0 | Must be zero (manometer level stable for 1 minute) |

### Meter Box Vacuum Leak Check

| | | |
|---|---|---|
| Test Vacuum, (in. Hg): | 22 | Coarse adjust valve fully open, fine adjust fully closed, sample inlet plugged |
| **Leak Rate, (lpm):** | 0 | Must be zero (meter dial stable for 1 minute) |

### Meter Box Thermocouple Readout Calibration Check

| Input Temperature | Allowable Temp. Dev.* | Low | High |
|---|---|---|---|
| 25 | 7 | 18 | 32 |
| 75 | 8 | 67 | 83 |
| 125 | 9 | 116 | 134 |
| 250 | 11 | 239 | 261 |
| 300 | 11 | 289 | 311 |
| 350 | 12 | 338 | 362 |
| 400 | 13 | 387 | 413 |
| 500 | 14 | 486 | 514 |

| Stack | Probe | Filter | Exit | Aux. | Meter In | Meter Out |
|---|---|---|---|---|---|---|
| 24 | 24 | 24 | XX | 25 | XX | 24 |
| 73 | 73 | 73 | XX | 73 | XX | 74 |
| 123 | 123 | 123 | XX | 124 | XX | 125 |
| 249 | 249 | 249 | | | | |
| 299 | 299 | 299 | | | | |
| 348 | | | | | | |
| 397 | | | | | | |
| 496 | | | | | | |

| Thermocouple simulator | |
|---|---|
| Make/Model: | ALTEK TYPE K |
| Serial No.: | DL1177 |
| Cal Date: | 1/19/2023 |

* Reading values must be within 1.5% of reference thermometer values (based on absolute temperature scale) for calibration to be acceptable.

### Meter Thermocouple Calibration

| Ref. Temp | Allowable Temp. Dev.* | Meter In | Meter Out |
|---|---|---|---|
| 65 | 8 | 66 | 66 |
| 150 | 9 | 153 | 152 |

| Thermocouple simulator | |
|---|---|
| Make/Model: | Traceable |
| Serial No.: | 211072668 |
| Cal Date: | 12/14/2023 |

Performed by: Name: CR Signature: [signature] Date: 5/24/23

Approved by: Name: JH Signature: [signature] Date: 5/24/23

MONTROSE
ENVIRONMENTAL

# EPA Method 5 / 6

## Meter Box Calibration: Standard Meter, Leak Check, and Thermocouple Calibration Check

## Metric Meter Box Units

| | |
|---|---|
| **Meter Box ID:** | LFCB 10B |
| **Meter ID (if applicable):** | METER ID |
| **Standard meter ID:** | A2202096 |
| **Standard meter Y (if applicable):** | 1.0000 |
| **Calibrated by:** | AG |
| **Current 6-month calibration Yd:** | 0.9963 |
| **Date of current 6-month calibration:** | 5/24/23 |

| | |
|---|---|
| **Date:** | 5/26/22 |
| **Location:** | Portland |
| **No. of runs (min. 3):** | 3 |
| **Meter box units, sample rate indication** | liters, rotameter |
| **Standard meter units** | liters |
| **Barometric pressure (in. Hg):** | 29.92 in. Hg |

| | |
|---|---|
| **Current Cal. Yd:** | **0.9963** |
| **Post-test Yd:** | **0.9930** |
| **Post-test Result:** | **PASS** |

### Meter Box Calibration Using a Standard Reference Meter

| | | Dry Gas Meter | | | | | | | | Standard Meter | | | | | | | | | |
|---|---|---|---|---|---|---|---|---|---|---|---|---|---|---|---|---|---|---|---|
| | | Volume | | | Initial Temps. | | Final Temps. | | | Volume | | | Initial Temps. | | Final Temps. | | -- Ambient Temperature -- | | |
| Rotameter (liter / min) | Time (min) | Initial (liters) | Final (liters) | Net (liters) | Inlet (deg F) | Outlet (deg F) | Inlet (deg F) | Outlet (deg F) | Vacuum (in Hg) | Initial (liters) | Final (liters) | Net (liters) | Inlet (deg F) | Outlet (deg F) | Inlet (deg F) | Outlet (deg F) | Initial (deg F) | Final (deg F) | Average (deg F) |
| 0.80 | 21.00 | 0.000 | 18.341 | 18.341 | XX | 84 | XX | 83 | 0.5 | 0.000 | 17.974 | 17.974 | XX | 76 | XX | 76 | 80 | 80 | 79.9 |
| 0.80 | 7.00 | 0.000 | 5.597 | 5.597 | XX | 83 | XX | 83 | 0.5 | 0.000 | 5.496 | 5.496 | XX | 76 | XX | 77 | 80 | 80 | 80.0 |
| 0.80 | 8.00 | 0.000 | 6.591 | 6.591 | XX | 83 | XX | 83 | 0.5 | 0.000 | 6.462 | 6.462 | XX | 77 | XX | 77 | 80 | 80 | 80.0 |

------ SAMPLE RATE ------

INDICATED VS. ACTUAL

| Indicated (liter / min) | Actual (liter / min) |
|---|---|
| 0.800 | 0.843 |
| 0.800 | 0.772 |
| 0.800 | 0.794 |

--- DRY GAS METER ---

CORRECTED VOLUME

| Vm(std) (liters) |
|---|
| 17.811 |
| 5.440 |
| 6.406 |

---- STANDARD METER ----

CORRECTED VOLUME

| Vm(std) (liters) |
|---|
| 17.699 |
| 5.407 |
| 6.351 |

-- DRY GAS METER --

CALIBRATION FACTOR

Yd

| Value (number) | Variation (number) |
|---|---|
| 0.9937 | 0.001 |
| 0.9939 | 0.001 |
| 0.9914 | -0.002 |

-- DRY GAS METER --

CALIBRATION FACTOR

ΔH@

| Value (number) | Variation (number) |
|---|---|
| #N/A | #N/A |
| #N/A | #N/A |
| #N/A | #N/A |

For Calibration Factor Y, the ratio of the reading of the calibration meter to the dry gas meter, acceptable tolerance of individual values from the average is +/-0.02.
For Orifice Calibration Factor ΔH@, the orifice differential pressure in inches of H20 that equates to 0.75 cfm of air at 68 F and 29.92 inches of Hg, acceptable tolerance of individual values from the average is +/-0.2.

| QA Criteria: | |
|---|---|
| Average Yd | 0.9930 |
| Average ΔH@ | #N/A |
| Variation of Yd's | PASS |
| Variation of ΔH@ | #N/A |

### Meter Box Vacuum Leak Check

| | | |
|---|---|---|
| Test Vacuum, (in. Hg): | 15 | Coarse adjust valve fully open, fine adjust fully closed, sample inlet plugged |
| **Leak Rate, (cfm):** | 0 | Must be zero (meter dial stable for 1 minute) |

Performed by: Name: Austin Goracke Signature: _____ Date: 5/26/23

Approved by: Name: KMG Signature: _____ Date: 5/26/23

Meter box post-test calibration form (std. meter) R1

APEX INSTRUMENTS SOURCE TESTING EQUIPMENT

Revised: 2019/12/19

# Certificate of Calibration

Secondary Reference Meter Calibration - Liters (L)

**Reference Meter Information**

| | |
|---|---|
| Model #: | DGM-SK25R-QS4 |
| Serial #: | A2202096 |
| DGM Model #: | SK25EX |
| DGM Serial #: | 20227978 |

**Calibration Conditions**

| | |
|---|---|
| Barometric Pressure (in Hg): | 29.87 |
| Ambient Temperature (°F): | 75.3 |
| Relative Humidity (%): | 55 |
| Altitude (ft): | 414.0 |
| Corrected Baro. Pressure (in Hg): | 29.46 |

**Factors/Conversions**

| | |
|---|---|
| Standard Temperature (°K): | 293.15 |
| Standard Pressure (mm Hg): | 760 |
| $K_1$ Coefficient (°K/mm Hg): | 0.3857 |

**Reference Equipment**

| | |
|---|---|
| WTM Model: | W-NKoDa-1A |
| WTM Cal. Due Date: | Aug-2022 |
| WTM Thermometer: | Internal |
| WTM Serial: | 544380 |
| Gamma: | 1.0030 |

| UUT Meter (DGM) | | | | | | | | Reference Meter (WTM) | | | | | | | Results | | | | |
|---|---|---|---|---|---|---|---|---|---|---|---|---|---|---|---|---|---|---|---|
| Run Time (minutes) | Orifice, ΔH (mm $H_2O$) | Volume (Pulse Count) | | | | Outlet Temperature (°C) | | Meter Pressure (mm $H_2O$) | Volume (L) | | | | Outlet Temperature (°C) | | Calibration Factor | | | Flowrate Std. & Corr. (L/min) | |
| | | Initial | Final | Total | Standardized | Initial | Final | | Initial | Final | Total | Standardized | Initial | Final | Initial Gamma | Final Gamma | Variation | | |
| Θ | $P_{m(g)}$ | $V_{mi}$ | $V_{mf}$ | $V_m$ | $V_{m(std)}$ | $t_{mi}$ | $t_{mf}$ | $P_w$ | $V_{wi}$ | $V_{wf}$ | $V_w$ | $V_{w(std)}$ | $t_{wi}$ | $t_{wf}$ | $Y_{init}$ | $Y_{final}$ | ΔY | $Q_{m(std&corr)}$ | |
| 5.00 | -25.0 | 0 | 11784 | 11784 | 11455 | 23.0 | 23.0 | -2.50 | 219.081 | 239.621 | 20.540 | 20.003 | 24.0 | 24.0 | 1.746E-03 | 0.9933 | -0.0013 | 4.028 | Variation from Overall Avg. Y |
| 5.00 | -25.0 | 11784 | 23607 | 11823 | 11493 | 23.0 | 23.0 | -2.50 | 239.621 | 260.315 | 20.694 | 20.153 | 24.0 | 24.0 | 1.754E-03 | 0.9974 | 0.0029 | 4.041 | |
| 5.00 | -25.0 | 23607 | 35434 | 11827 | 11477 | 23.0 | 24.0 | -2.50 | 260.315 | 280.893 | 20.578 | 20.037 | 24.0 | 24.1 | 1.746E-03 | 0.9930 | -0.0016 | 4.036 | |
| | | | | | | | | | | | | | | | 1.749E-03 | 0.9946 | **Averages** | 4.035 | 0.005 |
| 5.00 | -16.2 | 0 | 8891 | 8891 | 8621 | 24.0 | 24.0 | -1.50 | 280.893 | 296.473 | 15.580 | 15.169 | 24.1 | 24.1 | 1.760E-03 | 1.0009 | 0.0011 | 3.031 | Variation from Overall Avg. Y |
| 5.00 | -16.2 | 8891 | 17751 | 8860 | 8591 | 24.0 | 24.0 | -1.50 | 296.473 | 311.967 | 15.494 | 15.086 | 24.1 | 24.1 | 1.756E-03 | 0.9988 | -0.0010 | 3.021 | |
| 5.00 | -16.2 | 17751 | 26608 | 8857 | 8588 | 24.0 | 24.0 | -1.50 | 311.967 | 327.472 | 15.505 | 15.094 | 24.1 | 24.2 | 1.757E-03 | 0.9997 | -0.0001 | 3.020 | |
| | | | | | | | | | | | | | | | 1.758E-03 | 0.9998 | **Averages** | 3.024 | 0.000 |
| 6.00 | -9.3 | 0 | 6844 | 6844 | 6641 | 24.0 | 24.0 | -0.50 | 327.472 | 339.433 | 11.961 | 11.643 | 24.2 | 24.2 | 1.753E-03 | 0.9973 | -0.0004 | 1.946 | Variation from Overall Avg. Y |
| 6.00 | -9.6 | 6844 | 13884 | 7040 | 6831 | 24.0 | 24.0 | -0.50 | 339.433 | 351.715 | 12.282 | 11.955 | 24.2 | 24.2 | 1.750E-03 | 0.9956 | -0.0021 | 2.001 | |
| 6.00 | -9.6 | 13884 | 20810 | 6926 | 6720 | 24.0 | 24.0 | -0.50 | 351.715 | 363.853 | 12.138 | 11.815 | 24.2 | 24.2 | 1.758E-03 | 1.0001 | 0.0024 | 1.969 | |
| | | | | | | | | | | | | | | | 1.754E-03 | 0.9976 | **Averages** | 1.972 | 0.002 |
| 12.00 | -5.2 | 0 | 7131 | 7131 | 6922 | 24.0 | 24.0 | 0.00 | 363.853 | 376.363 | 12.510 | 12.176 | 24.2 | 24.3 | 1.759E-03 | 1.0005 | -0.0001 | 1.014 | Variation from Overall Avg. Y |
| 12.00 | -5.2 | 7131 | 14241 | 7110 | 6890 | 24.0 | 25.0 | 0.00 | 376.363 | 388.761 | 12.398 | 12.063 | 24.3 | 24.4 | 1.751E-03 | 0.9959 | -0.0048 | 1.009 | |
| 12.00 | -5.2 | 14241 | 21323 | 7082 | 6851 | 25.0 | 25.0 | 0.00 | 388.761 | 401.211 | 12.450 | 12.111 | 24.4 | 24.4 | 1.768E-03 | 1.0055 | 0.0049 | 1.004 | |
| | | | | | | | | | | | | | | | 1.759E-03 | 1.0006 | **Averages** | 1.009 | 0.001 |
| 22.00 | -3.8 | 0 | 6551 | 6551 | 6339 | 25.0 | 25.0 | 0.00 | 401.211 | 412.743 | 11.532 | 11.218 | 24.4 | 24.4 | 1.770E-03 | 1.0067 | -0.0006 | 0.507 | Variation from Overall Avg. Y |
| 22.00 | -3.8 | 6551 | 13165 | 6614 | 6400 | 25.0 | 25.0 | 0.00 | 412.743 | 424.407 | 11.664 | 11.345 | 24.4 | 24.5 | 1.773E-03 | 1.0084 | 0.0010 | 0.511 | |
| 22.00 | -3.8 | 13165 | 19757 | 6592 | 6378 | 25.0 | 25.0 | 0.00 | 424.407 | 436.022 | 11.615 | 11.292 | 24.5 | 24.7 | 1.770E-03 | 1.0070 | -0.0004 | 0.510 | |
| | | | | | | | | | | | | | | | 1.771E-03 | 1.0074 | **Averages** | 0.509 | 0.007 |

| Initial Scaling Factor |
|---|
| 1.0000 |

| Decimals | Readout |
|---|---|
| 3 | Liters |

| New Scaling Factor |
|---|
| 1.7580 |

| Calibration Average Y | |
|---|---|
| 1.758E-03 | 1.0000 |

| New Console Gamma (Y) |
|---|
| **1.0000** |

| Variation |
|---|
| **Passed** |

Note: For Calibration Factor Y, the ratio of the reading of the calibration meter to the dry gas meter, acceptable tolerance of individual values from the average is ±0.02.

Technician: Tracy Wilson Signature: Date: June 2, 2022

The instruments listed and described on this certificate have been calibrated against standards traceable to the National Institute of Standards and Technology (N I S T ) and in reference to EPA Method 5, Section 16

Apex Instruments - Address: 204 Technology Park Ln., Fuquay-Varina, NC 27526 USA | Tel: (919) 557-7300 Web: www.apexinst.com



378 of 489

W006AS-021372-RT-2857

# Certificate of Calibration - Supplemental

Secondary Reference Meter Calibration - Liters (L)

## Nomenclature

$P_{bar/corr}$ - Barometric Pressure, corrected for elevation
DGM - Dry Gas Meter
$K_1$ - Constant based on standard temp and press
$\Theta$ - Run time, in minutes
$P_m$ - $\Delta H$ (Meter Pressure, gauge)
$V_m$ - Volume collected by test meter, corrected for STP
$Q_{m(std)}$ - Calculated flow rate of test meter
K' - Critical orifice coefficient
$P_w$ - Measured pressure of reference meter
$t_w$ - Temperature measured in reference meter
$t_m$ - Temperature measured in test meter
Y - Ratio of volume collected from reference meter and test meter
sc - Scaling Factor
$Counts_{std}$ - Number of pulse counts, standardized
$C_{total}$ - Number of raw pulse counts of a calibration run

## Equations

$$V_{w(std)} = Y * K_1 \frac{V_w * (P_{bar} + \frac{P_{m(g)}}{13.6})}{T_w}$$

$$V_{m(std)} = Counts_{std} * Y_{sc(avg)}$$

$$Counts_{std} = K_1 \frac{C_{total} * (P_{bar} + \frac{P_{m(g)}}{13.6})}{T_m}$$

$$K_1 = \frac{T_{std}}{P_{std}} \qquad Y = \frac{V_{cr(std)}}{V_{m(std)}}$$

$$Q_{w(std)} = \frac{V_{w(std)}}{\Theta} \qquad Y_{sc} = \frac{V_{w(std)}}{Counts_{std}}$$

$$Metric\ \Delta H_@ = \frac{P_{m(g)} * 0.0011696 * (P_{bar} + \frac{P_{m(g)}}{13.6})}{T_m} * \left(\frac{T_w * \Theta}{V_w * P_{bar}}\right)^2$$

## Calibration Train

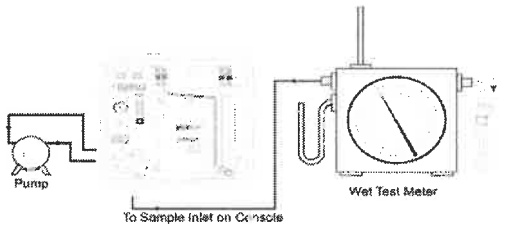


## Calibration Graphs

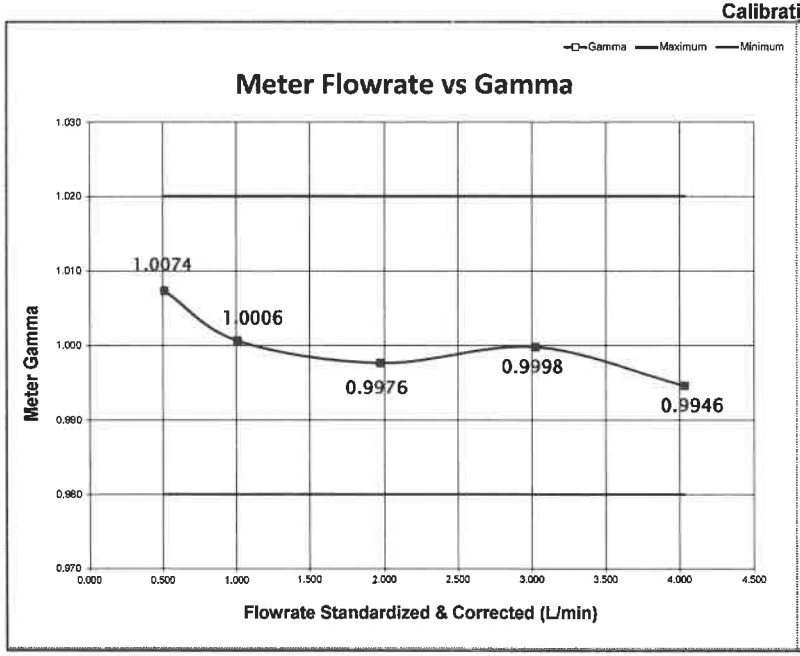


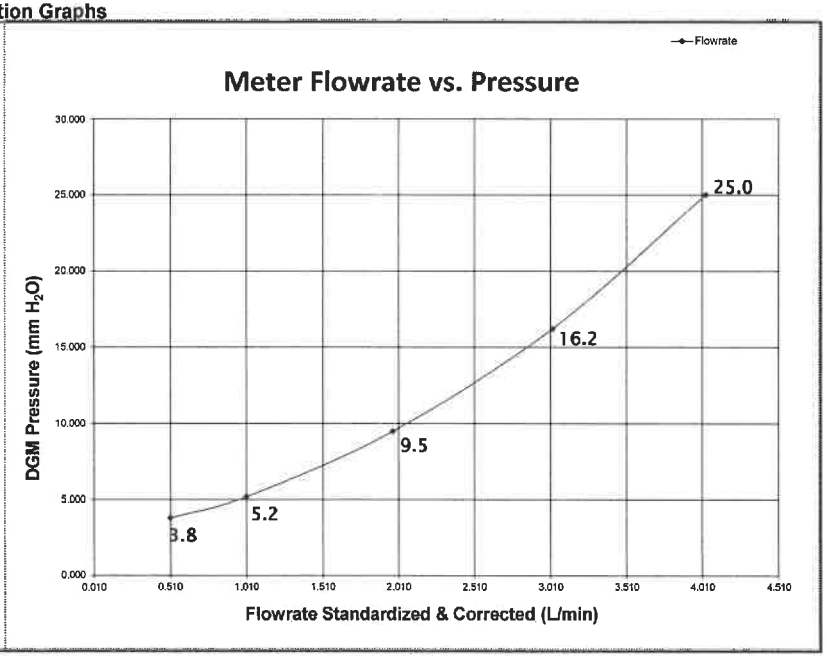

MONTROSE
ENVIRONMENTAL

# Pitot Tube Calibration Data Sheet

| | | | | | |
|---|---|---|---|---|---|
| **Calibration Date:** | May 26, 2023 | **Performed by:** | Max Gouveia | **Expiration Date:** | November 26, 2023 |
| | | **ID No.:** | 007 | **No obstructions:** | Yes |
| **Calibrated Pitot Tube:** | S-type | **Probe/Pitot ID No:** | 007 | **No damage:** | Yes |
| **Probe Description:** | Nonself Supporting Probe (NP) | **Effective Length (ft):** | 6 | **Level and Perpendicular:** | Yes |
| **Thermocouple calibration performed?** | Yes | **Thermocouple passed calibration?** | | | Yes |

Protractor or Digital Angle Finder ID: 708
Measuring Tape ID: 720
Caliper ID: 706

Calibration performed using the procedures of EPA Method 2, Section 10.1

## Alignment and Tubing Dimensions

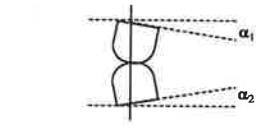




Degree indicating level position for determining $\alpha_1$ and $\alpha_2$.




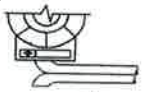




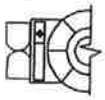

Degree indicating level position for determining θ.

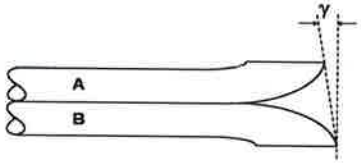


Degree indicating level position for determining γ then calculating Z.

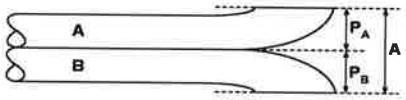


| | | |
|---|---|---|
| $\alpha_1$ $(-10° < \alpha_1 < +10°)$ | 1.0 | |
| $\alpha_2$ $(-10° < \alpha_2 < +10°)$ | 1.2 | |
| $\beta_1$ $(-5° < \beta_1 < +5°)$ | 1.4 | |
| $\beta_2$ $(-5° < \beta_2 < +5°)$ | 2.3 | |
| γ | 1.1 | |
| θ | 1.7 | |
| A | 0.9365 | |
| z= A tan γ (± 0.125") | 0.0180 | Pass |
| w= A tan θ (± 0.03125") | 0.0278 | Pass |
| $D_t$ (0.1875" < $D_t$ < 0.375") | 0.3740 | Pass |
| $P_A$ $(1.05D_t < P_A < 1.5D_t)$ | 0.4683 | Pass |
| $P_B$ $(1.05D_t < P_B < 1.5D_t)$ | 0.4683 | Pass |
| $\lvert P_A - P_B \rvert \leq 0.0625$ | 0.0000 | Pass |

## Assembly Inter-Component Spacing Requirements

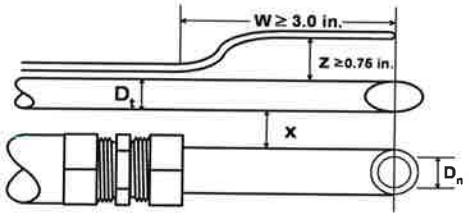


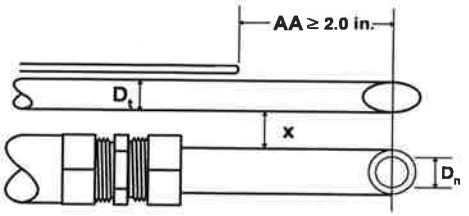


| | | | |
|---|---|---|---|
| W (≥ 3.0") | 3.550 | Pass | Offset TC only |
| -or- AA (≥ 2.0") | | | Setback TC only |
| X | 1.200 | | |
| $D_n$ | 0.500 | | |
| X / $D_n$ (≥ 1.5) | 2.400 | Pass | |
| Y (≥ 3.0") | 3.300 | Pass | |
| Z ≥ 0.75" | 1.000 | Pass | Offset TC only |

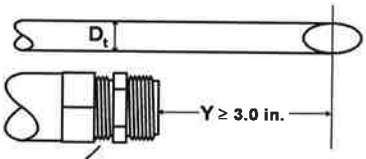


Performed By: Max Gouveia
Signature: [signature] Date: 5/26/23

Approved By: Austin Goracke
Signature: [signature] Date: 5/26/23

MONTROSE

# Pitot Tube Calibration Data Sheet

| | | | | | |
|---|---|---|---|---|---|
| **Calibration Date:** | June 5, 2023 | **Performed by:** | Preston Bauder | **Expiration Date:** | December 5, 2023 |
| | | **ID No.:** | 169-NP-6 | **No obstructions:** | Yes |
| **Calibrated Pitot Tube:** | S-type | **Probe/Pitot ID No:** | #N/A | **No damage:** | Yes |
| **Probe Description:** | CUSTOM (CTM) | **Effective Length (ft):** | 6 | **Level and Perpendicular:** | Yes |
| **Thermocouple calibration performed?** | Yes | **Thermocouple passed calibration?** | | | Yes |

Protractor or Digital Angle Finder ID: 708
Measuring Tape ID: 728
Caliper ID: 705

Calibration performed using the procedures of EPA Method 2, Section 10.1

## Alignment and Tubing Dimensions

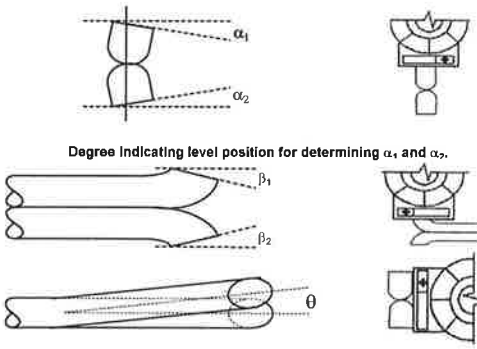


Degree indicating level position for determining $\alpha_1$ and $\alpha_2$.

Degree indicating level position for determining θ.

| | | |
|---|---|---|
| $\alpha_1$ $(-10° < \alpha_1 < +10°)$ | 2.1 | |
| $\alpha_2$ $(-10° < \alpha_2 < +10°)$ | 1.8 | |
| $\beta_1$ $(-5° < \beta_1 < +5°)$ | 1.3 | |
| $\beta_2$ $(-5° < \beta_2 < +5°)$ | 1.0 | |
| γ | 1.1 | |
| θ | 1.3 | |
| A | 0.9580 | |
| z= A tan γ (± 0.125") | 0.0184 | Pass |
| w= A tan θ (± 0.03125") | 0.0217 | Pass |
| $D_t$ (0.1875" < $D_t$ < 0.375") | 0.3745 | Pass |
| $P_A$ $(1.05D_t < P_A < 1.5D_t)$ | 0.4790 | Pass |
| $P_B$ $(1.05D_t < P_B < 1.5D_t)$ | 0.4790 | Pass |
| $\lvert P_A - P_B \rvert \leq 0.0625$ | 0.0000 | Pass |

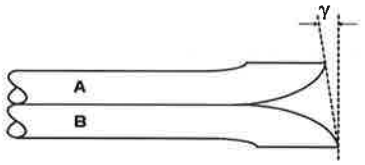


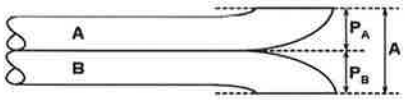


Degree indicating level position for determining γ then calculating Z.

## Assembly Inter-Component Spacing Requirements

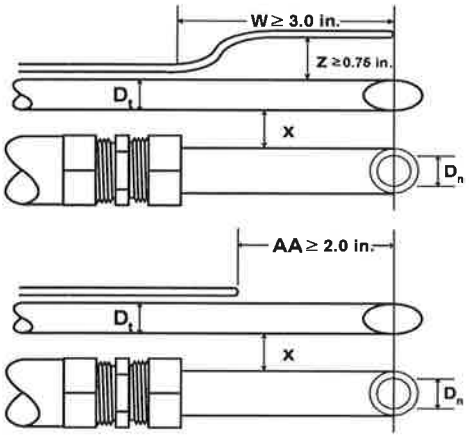


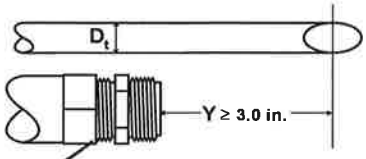


| | | | |
|---|---|---|---|
| W (≥ 3.0") | 9.800 | Pass | Offset TC only |
| -or- AA (≥ 2.0") | | | Setback TC only |
| X | 0.750 | | |
| $D_n$ | 0.350 | | |
| X / $D_n$ (≥ 1.5) | 2.000 | Pass | |
| Y (≥ 3.0") | 3.250 | Pass | |
| Z ≥ 0.75" | 1.500 | Pass | Offset TC only |

Performed By: Preston Bauder Signature: Date: 6/5/23

Approved By: Signature: Date: 6/5/23

MONTROSE ENVIRONMENTAL

# Pitot Tube Calibration Data Sheet

| | | | | | |
|---|---|---|---|---|---|
| **Calibration Date:** | May 26, 2023 | **Performed by:** | Max Gouveia | **Expiration Date:** | November 26, 2023 |
| | | **ID No.:** | 3s-2 | **No obstructions:** | Yes |
| **Calibrated Pitot Tube:** | S-type | **Probe/Pitot ID No:** | 3s-2 | **No damage:** | Yes |
| **Probe Description:** | CUSTOM (CTM) | **Effective Length (ft):** | 2 | **Level and Perpendicular:** | Yes |
| **Thermocouple calibration performed?** | | Yes | **Thermocouple passed calibration?** | | Yes |

Protractor or Digital Angle Finder ID: 708
Measuring Tape ID: 720
Caliper ID: 706

Calibration performed using the procedures of EPA Method 2, Section 10.1

## Alignment and Tubing Dimensions

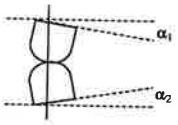




Degree indicating level position for determining $\alpha_1$ and $\alpha_2$.

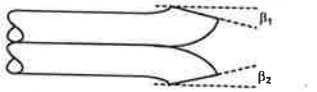




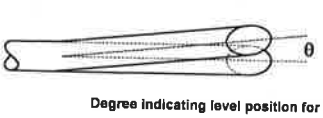




Degree indicating level position for determining θ.

| | | |
|---|---|---|
| $\alpha_1$ $(-10° < \alpha_1 < +10°)$ | 1.0 | |
| $\alpha_2$ $(-10° < \alpha_2 < +10°)$ | 1.0 | |
| $\beta_1$ $(-5° < \beta_1 < +5°)$ | 1.9 | |
| $\beta_2$ $(-5° < \beta_2 < +5°)$ | 1.1 | |
| $\gamma$ | 0.0 | |
| $\theta$ | 0.5 | |
| A | 0.9216 | |
| $z = A \tan \gamma$ $(\pm\ 0.125")$ | 0.0000 | Pass |
| $w = A \tan \theta$ $(\pm\ 0.03125")$ | 0.0080 | Pass |
| $D_t$ $(0.1875" < D_t < 0.375")$ | 0.3740 | Pass |
| $P_A$ $(1.05D_t < P_A < 1.5D_t)$ | 0.4608 | Pass |
| $P_B$ $(1.05D_t < P_B < 1.5D_t)$ | 0.4608 | Pass |
| $\lvert P_A - P_B \rvert \leq 0.0625$ | 0.0000 | Pass |

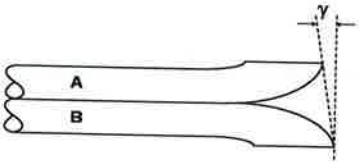


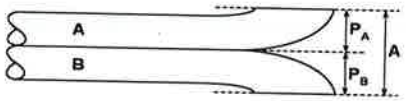


Degree indicating level position for determining γ then calculating Z.

## Assembly Inter-Component Spacing Requirements

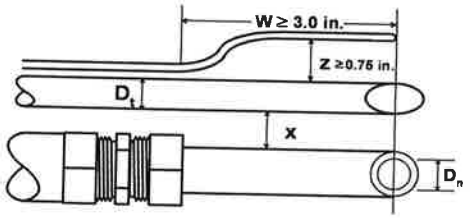


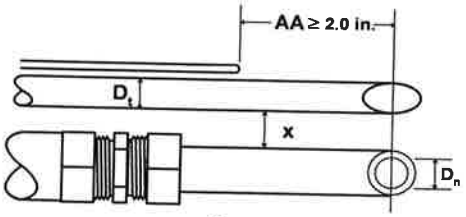


| | | | |
|---|---|---|---|
| W (≥ 3.0") | | | Offset TC only |
| -or- AA (≥ 2.0") | 2.250 | Pass | Setback TC only |
| X | | | |
| $D_n$ | | | |
| $X / D_n$ (≥ 1.5) | | | |
| Y (≥ 3.0") | | | |
| Z ≥ 0.75" | | | Offset TC only |

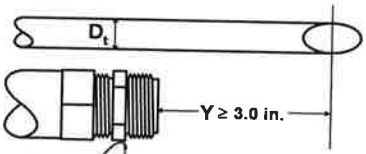


Performed By: Max Gouveia
Approved By: Austin Gorradke

Signature: [signature] Date: 5/26/23
Signature: [signature] Date: 5/26/23

MONTROSE ENVIRONMENTAL

# Pitot Tube Calibration Data Sheet

| | | | | | |
|---|---|---|---|---|---|
| **Calibration Date:** | May 26, 2023 | **Performed by:** | Max Gouveia | **Expiration Date:** | November 26, 2023 |
| | | **ID No.:** | 017-NP-6 | **No obstructions:** | Yes |
| **Calibrated Pitot Tube:** | S-type | **Probe/Pitot ID No:** | 017-NP-6 | **No damage:** | Yes |
| **Probe Description:** | Nonself Supporting Probe (NP) | **Effective Length (ft):** | 6 | **Level and Perpendicular:** | Yes |
| **Thermocouple calibration performed?** | Yes | **Thermocouple passed calibration?** | | | Yes |

Protractor or Digital Angle Finder ID: 708
Measuring Tape ID: 720
Caliper ID: 706

Calibration performed using the procedures of EPA Method 2, Section 10.1

## Alignment and Tubing Dimensions

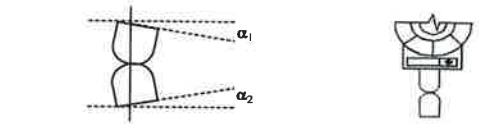


Degree indicating level position for determining $\alpha_1$ and $\alpha_2$.

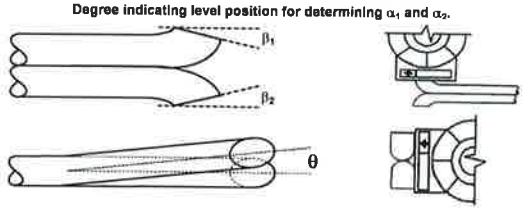


Degree indicating level position for determining θ.

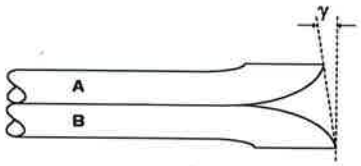


Degree indicating level position for determining γ then calculating Z.

| | | |
|---|---|---|
| $\alpha_1$ $(-10° < \alpha_1 < +10°)$ | 2.7 | |
| $\alpha_2$ $(-10° < \alpha_2 < +10°)$ | 3.0 | |
| $\beta_1$ $(-5° < \beta_1 < +5°)$ | 1.5 | |
| $\beta_2$ $(-5° < \beta_2 < +5°)$ | 1.9 | |
| γ | 2.0 | |
| θ | 1.1 | |
| A | 0.9956 | |
| z= A tan γ (± 0.125") | 0.0348 | Pass |
| w= A tan θ (± 0.03125") | 0.0191 | Pass |
| $D_t$ (0.1875" < $D_t$ < 0.375") | 0.3740 | Pass |
| $P_A$ $(1.05D_t < P_A < 1.5D_t)$ | 0.4978 | Pass |
| $P_B$ $(1.05D_t < P_B < 1.5D_t)$ | 0.4978 | Pass |
| $\lvert P_A - P_B \rvert \leq 0.0625$ | 0.0000 | Pass |

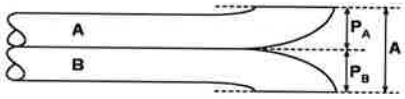


## Assembly Inter-Component Spacing Requirements

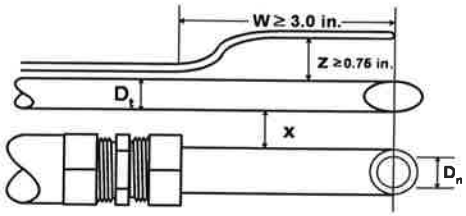


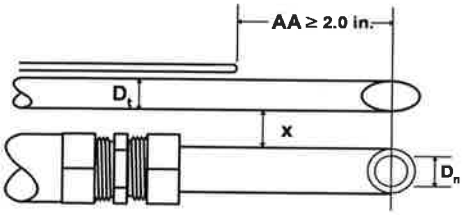


| | | | |
|---|---|---|---|
| W (≥ 3.0") | 4.200 | Pass | Offset TC only |
| -or- AA (≥ 2.0") | | | Setback TC only |
| X | 1.000 | | |
| $D_n$ | 0.500 | | |
| $X / D_n$ (≥ 1.5) | 2.000 | Pass | |
| Y (≥ 3.0") | 3.750 | Pass | |
| Z ≥ 0.75" | 1.250 | Pass | Offset TC only |

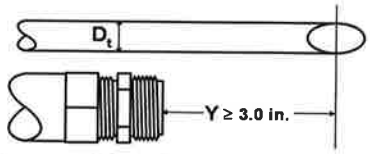


Performed By: Max Gouveia
Signature: [signature] Date: 5/26/23

Approved By: Austin Goracke
Signature: [signature] Date: 5/26/23

# Calibration complies with ISO/IEC 17025, ANSI/NCSL Z540-1, and 9001

ACCREDITED A2LA Certificate No. 1750.01 Calibration

**Cert. No.: 4371-12924095**

## Traceable® Certificate of Calibration for Lollipop Thermometer

Manufactured for and distributed by : Traceable® Products 12554 Galveston Rd B230, Webster, TX 77598

### Instrument Identification:

Model: 4371,90205-05 S/N: 211072661 Manufacturer: Control Company

### Standards/Equipment:

| Description | Serial Number | Due Date | NIST Traceable Reference |
|---|---|---|---|
| Temperature Calibration Bath | 93139 | | |
| Temperature Probe | 128 | 09 Jul 2022 | 15-D4F0Q-40-1 |
| Thermistor Module | A17118 | 08 Jul 2022 | 1000469276 |
| Temperature Calibration Bath | B93537 | | |
| Thermistor Module | B96381 | 18 Aug 2022 | 1000470702 |
| Temperature Probe | 5392 | 04 Aug 2022 | 4500006080 |

### Certificate Information:

Technician: 420 Procedure: CAL-03 Cal Date: 14 Dec 2021 Cal Due Date: 14 Dec 2023

Test Conditions: 59.22%RH 24.01°C 1021mBar

### Calibration Data: (New Instrument)

| Unit(s) | Nominal | As Found | In Tol | Nominal | As Left | In Tol | Min | Max | ±U | TUR |
|---|---|---|---|---|---|---|---|---|---|---|
| °C | N.A. | N.A. | | 0.00 | 0.2 | Y | -1 | 1 | 0.058 | >4:1 |
| °C | N.A. | N.A. | | 100.00 | 100.1 | Y | 99 | 101 | 0.058 | >4:1 |

**This certificate indicates Traceability to standards provided by (NIST) National Institute of Standards and Technology and/or a National Standards Laboratory.**

A Test Uncertainty Ratio of at least 4:1 is maintained unless otherwise stated and is calculated using the expanded measurement uncertainty. Uncertainty evaluation includes the instrument under test and is calculated in accordance with the ISO "Guide to the Expression of Uncertainty in Measurement : (GUM). The uncertainty represents an expanded uncertainty using a coverage factor k=2 to approximate a 95% confidence level. In tolerance conditions are based on test results falling within specified limits with no reduction by the uncertainty of the measurement. The results contained herein relate only to the item calibrated. This certificate shall not be reproduced except in full, without written approval of Control Company.

Nominal=Standard's Reading; As Left=Instrument's Reading; In Tol=In Tolerance; Min/Max=Acceptance Range; ± U=Expanded Measurement Uncertainty; TUR=Test Uncertainty Ratio; Accuracy=±(Max-Min)/2; Min=As Left Nominal(Rounded) – Tolerance; Max= As Left Nominal(Rounded) + Tolerance;

Nicol Rodriguez, Quality Manager

Marisa Elms, Technical Manager

Note :

### Maintaining Accuracy:

In our opinion once calibrated your Lollipop Thermometer should maintain its accuracy. There is no exact way to determine how long calibration will be maintained. Lollipop Thermometer change little, if any at all, but can be affected by aging, temperature, shock, and contamination.

### Recalibration:

For factory calibration and re-certification traceable to National Institute of Standards and Technology contact Control Company.

Issue Date : 14 Dec 2021

**CONTROL COMPANY 12554 Galveston RD Suite B230 Webster TX USA 77598**
**Phone 281 482-1714 Fax 281 482-9448 sales@control3.com www.traceable.com**

Control Company is an ISO/IEC 17025:2017 Calibration Laboratory Accredited by (A2LA) American Association for Laboratory Accreditation, Certificate No. 1750.01.
Control Company is ISO 9001:2015 Quality Certified by DNV GL, Certificate No. CERT-01805-2006-AQ-HOU-ANAB.
International Laboratory Accreditation Cooperation - Multilateral Recognition Arrangement (ILAC-MRA).



Traceable® is a registered trademark of Control Company

© 2017 Control Company

**Barometric Pressure Determination**

**Date:** 05/23/23

**Time:** 7:00

**Data By:** SW

Reference: http://forecast.weather.gov/MapClick.php?CityName=Orange&stat

| | |
|---|---|
| **Reference Barometer ID** | **Portland-Hillsboro Airport (KHIO)** |
| **Reference Barometer Location** | Lat: 45.54765°N Lon: 122.95568°W Elev: 194ft. |
| **Reference Barometer Other Info.** | Last Update on 23 May 6:35 PDT |
| **Reference Barometer Indication, corrected to sea level** | **30.17** |
| **Reference Barometer Reference Elevation** | **194** |
| **Reference Barometer Actual Pressure** | 29.98 |
| | |
| **Test Barometer Location/Site** | **Forest Grove, OR** |
| **Location/Site Elevation** | **210** |
| **Location/Site Barometric Pressure** | 29.96 |
| | |
| **Sampling Location Height (above/below site elevation)** | **5** |
| **Sampling Location Barometric Pressure** | **29.96** |

**Barometric Pressure Determination**

**Date:** 05/24/23

**Time:** 7:45

**Data By:** SW

Reference: http://forecast.weather.gov/MapClick.php?CityName=Orange&stat

| | |
|---|---|
| **Reference Barometer ID** | **Portland-Hillsboro Airport (KHIO)** |
| **Reference Barometer Location** | Lat: 45.54765°N Lon: 122.95568°W Elev: 194ft. |
| **Reference Barometer Other Info.** | Last Update on 24 May 7:15 PDT |
| **Reference Barometer Indication, corrected to sea level** | **30.09** |
| **Reference Barometer Reference Elevation** | **194** |
| **Reference Barometer Actual Pressure** | 29.90 |
| | |
| **Test Barometer Location/Site** | **Forest Grove, OR** |
| **Location/Site Elevation** | **210** |
| **Location/Site Barometric Pressure** | 29.88 |
| | |
| **Sampling Location Height (above/below site elevation)** | **5** |
| **Sampling Location Barometric Pressure** | **29.88** |

**Barometric Pressure Determination**

**Date:** 05/25/23

**Time:** 8:15

**Data By:** SW

Reference: http://forecast.weather.gov/MapClick.php?CityName=Orange&stat

| | |
|---|---|
| **Reference Barometer ID** | **Portland-Hillsboro Airport (KHIO)** |
| **Reference Barometer Location** | Lat: 45.54765°N Lon: 122.95568°W Elev: 194ft. |
| **Reference Barometer Other Info.** | Last Update on 25 May 7:50 PDT |
| **Reference Barometer Indication, corrected to sea level** | **29.93** |
| **Reference Barometer Reference Elevation** | **194** |
| **Reference Barometer Actual Pressure** | 29.74 |
| | |
| **Test Barometer Location/Site** | **Forest Grove, OR** |
| **Location/Site Elevation** | **210** |
| **Location/Site Barometric Pressure** | 29.72 |
| | |
| **Sampling Location Height (above/below site elevation)** | **5** |
| **Sampling Location Barometric Pressure** | **29.72** |

# Appendix D.3
# Instrumental Test Method QA/QC Data

MONTROSE AIR QUALITY SERVICES

# CEMS CONFIGURATION DATA

**Project Information**

Client / Facility: ODEQ. 5/23-5/25/23. Project No: PROJ-021372

Source / Location: ACI Stack. Method(s): 3A, 6C, 7E, 10, 25A/CH4

Test Dates: _____ Project Manager / Team (initials): SW/KS/AG/MG/NW/QR/PB.

**Analyzers In Service**

Please circle all applicable

| | $O_2$ | $CO_2$ | CO | $NO_x$ | $SO_2$ | | | TRS | THC |
|---|---|---|---|---|---|---|---|---|---|
| Response Time (seconds) | 45 | 45 | 60 | 60 | 60 | | | | 60. |

**Filtration (circle)**

| | | | | | |
|---|---|---|---|---|---|
| Filter Type | In-Stack | (Out-of-Stack) | Sintered | Other | |
| Filter Material | Glass | Quartz | Steel | N/A | Other CERAMIC. |

**Sample Probe (circle)**

| | | | | | | | |
|---|---|---|---|---|---|---|---|
| Length | (4') | 6' | 8' | 10' | 12' | 14' | Other |
| Material | (Steel) | Glass | Teflon | Titanium | Quartz | Inconel | Other |
| Heated | (Yes) | No | | | | | |
| Probe Temperature | 250. °F | N/A | | | | | |

**Conditioner / Moisture Knock-Out (circle)**

| | | | | | |
|---|---|---|---|---|---|
| In Use? | (Yes) | No | | | |
| Coolant | Ice and Water | Anti-Freeze | (Electric) | Other | |
| Trap Material | Steel | Glass | (Teflon) | Other | |

**Leak Checks**

| | | | |
|---|---|---|---|
| Pre-Test | 0.00 ~~cfh~~ LPM @ 10 in. Hg | | _____ cfh @ _____ in. Hg |
| Post-Test | 0.00 ~~cfh~~ @ 12 in. Hg | | _____ cfh @ _____ in. Hg |
| System Flow Rate | 4 ~~cfh~~ LPM | | _____ cfh |
| Leak Rate | Post-Test (cfh) / System Flow Rate (cfh) * 100 = 0 % | | _____ % |

**Fill in locations of elements of the CEM system, as applicable**

Legend: ⊗ = Cal Tee; □ = Filter; △ = Gas Conditioner; ◇ = Heated Pump; ⧖ = Sample Split; ▽ = Citrate Buffer; ⬭ = Tube Furnace

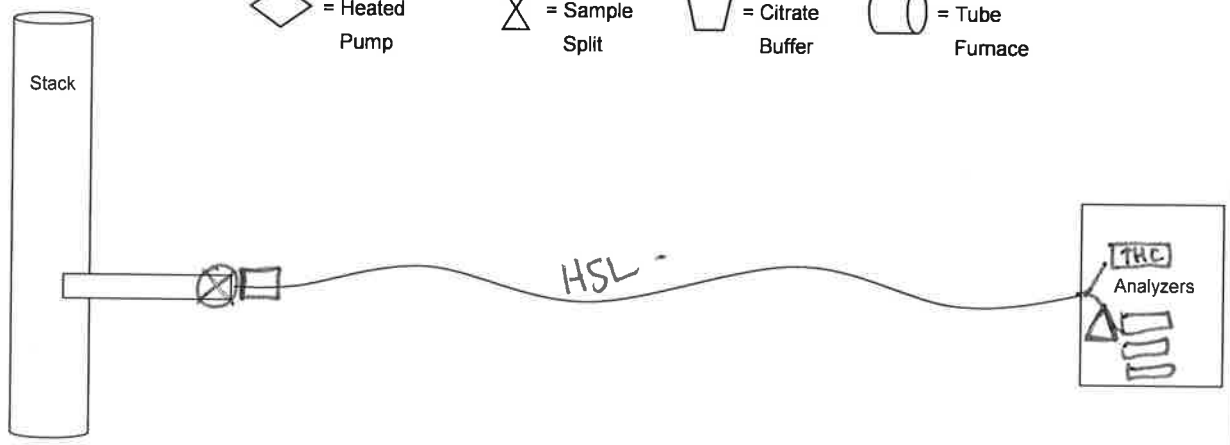


**Upstream of conditioner**

Sample Line Length: 100. feet

Sample Line Material: teflon/HSL.

Sample Line Temp.: 250. deg. F

**Downstream of conditioner**

Sample Line Length: 4. feet

Sample Line Material: teflon/HSL

Sample Line Temp.: 250 deg. F

If this information is not accurate for all runs, note exceptions here.

| MAQDAQ 1.0 | | | |
|---|---|---|---|
| Project Name: ODEQ ACI - Compliance Testing | Project Number: PROJ-021372 | CEMS Operator: SW | Unit/Condition: ACI |
| Run Length: 90 | Record Interval: 6 | Average Interval: 60 | Triplicate Sampling: True |
| Traverse: True | Ports: 1 | Points per port: 3 | DAQ Device: DT9806(01) |

## Analyzer Configuration

| | | | | | | | | |
|---|---|---|---|---|---|---|---|---|
| **Name:** | O2 SN-719 | CO2 SN-719 | | CO SN-743 | SO2 SN-3 | THC SN-718 | CH4 SN-718 | NOx SN-695 |
| **Make/Model:** | | | | | | | | |
| **25A or 7E:** | 7E | 7E | | 7E | 7E | 25A | 25A | 7E |
| **Voltage max:** | 10 | 10 | | 10 | 10 | 10 | 10 | 10 |
| **Voltage offset:** | 0 | 0 | | 0 | 0 | 0 | 0 | 0 |
| **Range:** | 10 | 10 | | 10 | 10 | 10 | 10 | 10 |
| **Upscale:** | | | | | | | | |
| **Downscale:** | | | | | | | | |

## Cylinder Information

| | | | | | | | | |
|---|---|---|---|---|---|---|---|---|
| **Zero Number:** | CC104356 | CC104356 | | CC104356 | CC104356 | ALM064841 | ALM064841 | CC104356 |
| **Zero Conc:** | 0 | 0 | | 0 | 0 | 0 | 0 | 0 |
| **Low Number:** | | | | | | ALM-001117 | ALM-001117 | |
| **Low Conc:** | | | | | | 297.1 | 297.1 | |
| **Mid Number:** | EB0141254 | EB0141254 | | CC701645 | CC146486 | AAL19987 | AAL19987 | CC325442 |
| **Mid Conc:** | 10.04 | 9.946 | | 3997 | 15.2 | 495.7 | 495.7 | 127.6 |
| **High Number:** | ALM066032 | ALM066032 | | CC303787 | XC034618B | CC347486 | CC347486 | CC428172 |
| **High Conc:** | 23.21 | 22.54 | | 7911 | 30.29 | 874.8 | 874.8 | 279.5 |
| **Bias Number:** | ALM066032 | EB0141254 | | CC701645 | CC146486 | AAL19987 | AAL19987 | CC325442 |
| **Bias Conc:** | 23.21 | 9.946 | | 3997 | 15.2 | 495.7 | 495.7 | 127.6 |

| MAQDAQ 1.0 | | | |
|---|---|---|---|
| Project Name: ODEQ ACI - Compliance Testing | Project Number: PROJ-021372 | CEMS Operator: SW | Unit/Condition: ACI |
| Run Length: 90 | Record Interval: 6 | Average Interval: 60 | Triplicate Sampling: True |
| Traverse: True | Ports: 1 | Points per port: 3 | DAQ Device: DT9806(01) |

| Calibration | | | | | | | | | |
|---|---|---|---|---|---|---|---|---|---|
| | **Name:** | O2 SN-719 | CO2 SN-719 | | CO SN-743 | SO2 SN-3 | THC SN-718 | CH4 SN-718 | NOx SN-695 |
| | **Make/Model:** | | | | | | | | |
| | **25A or 7E:** | 7E | 7E | | 7E | 7E | 25A | 25A | 7E |

| **Cylinder Concentrations** | | | | | | | | | |
|---|---|---|---|---|---|---|---|---|---|
| | **Zero:** | 0.000 | 0.000 | | 0.000 | 0.000 | 0.000 | 0.000 | 0.000 |
| | **Low:** | | | | | | 297.1 | 297.1 | |
| | **Mid:** | 10.04 | 9.946 | | 3997 | 15.20 | 495.7 | 495.7 | 127.6 |
| | **High:** | 23.21 | 22.54 | | 7911 | 30.29 | 874.8 | 874.8 | 279.5 |

| **Calibration Readings** | | | | | | | | | |
|---|---|---|---|---|---|---|---|---|---|
| | **Zero reading:** | 0.009 | 0.003 | | 1.800 | 0.128 | 0.180 | 0.030 | 0.096 |
| | **Low reading:** | 0.000 | 0.000 | | 0.000 | 0.000 | 308.5 | 307.1 | 0.000 |
| | **Mid reading:** | 9.988 | 9.878 | | 4048 | 15.51 | 513.2 | 513.7 | 127.7 |
| | **High reading:** | 23.20 | 22.53 | | 7893 | 30.38 | 876.4 | 875.6 | 279.7 |

| **EPA Method 7E Error Calculations** | | | | | | | | | |
|---|---|---|---|---|---|---|---|---|---|
| **Zero %Err:** | **<2.0** | 0.039 | 0.013 | | 0.023 | 0.423 | N/A | N/A | 0.034 |
| **Mid %Err:** | **<2.0** | -0.224 | -0.302 | | 0.645 | 1.023 | N/A | N/A | 0.036 |
| **High %Err:** | **<2.0** | -0.043 | -0.044 | | -0.228 | 0.297 | N/A | N/A | 0.072 |

| **EPA Method 25A Error Calculations** | | | | | | | | | |
|---|---|---|---|---|---|---|---|---|---|
| **Zero Err:** | **N/A** | N/A | N/A | | N/A | N/A | 0.180 | 0.030 | N/A |
| **Low Err:** | **5% of cyl** | N/A | N/A | | N/A | N/A | 11.40 | 10.000 | N/A |
| **Mid Err:** | **5% of cyl** | N/A | N/A | | N/A | N/A | 17.50 | 18.00 | N/A |
| **High Err:** | **N/A** | N/A | N/A | | N/A | N/A | 1.600 | 0.800 | N/A |

| MAQDAQ 1.0 | | | |
|---|---|---|---|
| Project Name: ODEQ ACI - Compliance Testing | Project Number: PROJ-021372 | CEMS Operator: SW | Unit/Condition: ACI |
| Run Length: 90 | Record Interval: 6 | Average Interval: 60 | Triplicate Sampling: True |
| Traverse: True | Ports: 1 | Points per port: 3 | DAQ Device: DT9806(01) |

| Initial bias | | | | | | | | | |
|---|---|---|---|---|---|---|---|---|---|
| | **Name:** | O2 SN-719 | CO2 SN-719 | | CO SN-743 | SO2 SN-3 | THC SN-718 | CH4 SN-718 | NOx SN-695 |
| | **Make/Model:** | | | | | | | | |
| | **25A or 7E:** | 7E | 7E | | 7E | 7E | 25A | 25A | 7E |
| **Cylinder Concentrations** | | | | | | | | | |
| | **Zero:** | 0.000 | 0.000 | | 0.000 | 0.000 | 0.000 | 0.000 | 0.000 |
| | **Low:** | | | | | | 297.1 | 297.1 | |
| | **Mid:** | 10.04 | 9.946 | | 3997 | 15.20 | 495.7 | 495.7 | 127.6 |
| | **High:** | 23.21 | 22.54 | | 7911 | 30.29 | 874.8 | 874.8 | 279.5 |
| **Calibration Readings** | | | | | | | | | |
| | **Zero reading:** | 0.009 | 0.003 | | 1.800 | 0.128 | 0.180 | 0.030 | 0.096 |
| | **Low reading:** | 0.000 | 0.000 | | 0.000 | 0.000 | 308.5 | 307.1 | 0.000 |
| | **Mid reading:** | 9.988 | 9.878 | | 4048 | 15.51 | 513.2 | 513.7 | 127.7 |
| | **High reading:** | 23.20 | 22.53 | | 7893 | 30.38 | 876.4 | 875.6 | 279.7 |
| **EPA Method 7E Error Calculations** | | | | | | | | | |
| **Zero %Err:** | **<2.0** | 0.039 | 0.013 | | 0.023 | 0.423 | N/A | N/A | 0.034 |
| **Mid %Err:** | **<2.0** | -0.224 | -0.302 | | 0.645 | 1.023 | N/A | N/A | 0.036 |
| **High %Err:** | **<2.0** | -0.043 | -0.044 | | -0.228 | 0.297 | N/A | N/A | 0.072 |
| **EPA Method 25A Error Calculations** | | | | | | | | | |
| **Zero %Err:** | **N/A** | N/A | N/A | | N/A | N/A | 0.180 | 0.030 | N/A |
| **Low %Err:** | **5% of cyl** | N/A | N/A | | N/A | N/A | 11.40 | 10.000 | N/A |
| **Mid %Err:** | **5% of cyl** | N/A | N/A | | N/A | N/A | 17.50 | 18.00 | N/A |
| **High %Err:** | **N/A** | N/A | N/A | | N/A | N/A | 1.600 | 0.800 | N/A |
| **Initial Bias Data** | | | | | | | | | |
| | **Zero reading:** | 0.058 | -0.137 | | 6.100 | -0.458 | N/A | N/A | 0.416 |
| | **Span reading:** | 23.10 | 9.857 | | 4156 | 15.14 | N/A | N/A | 128.1 |
| **Zero % bias:** | **<5.0** | 0.211 | -0.621 | | 0.054 | -1.935 | N/A | N/A | 0.114 |
| **Span % bias:** | **<5.0** | -0.431 | -0.093 | | 1.365 | -1.222 | N/A | N/A | 0.143 |

| MAQDAQ 1.0 | | | |
|---|---|---|---|
| Project Name: ODEQ ACI - Compliance Testing | Project Number: PROJ-021372 | CEMS Operator: SW | Unit/Condition: ACI |
| Run Length: 90 | Record Interval: 6 | Average Interval: 60 | Triplicate Sampling: True |
| Traverse: True | Ports: 1 | Points per port: 3 | DAQ Device: DT9806(01) |

## Analyzer Configuration

| | | | | | | | | |
|---|---|---|---|---|---|---|---|---|
| **Name:** | O2 SN-719 | CO2 SN-719 | | CO SN-743 | SO2 SN-3 | THC SN-718 | CH4 SN-718 | NOx SN-695 |
| **Make/Model:** | | | | | | | | |
| **25A or 7E:** | 7E | 7E | | 7E | 7E | 25A | 25A | 7E |
| **Voltage max:** | 10 | 10 | | 10 | 10 | 10 | 10 | 10 |
| **Voltage offset:** | 0 | 0 | | 0 | 0 | 0 | 0 | 0 |
| **Range:** | 10 | 10 | | 10 | 10 | 10 | 10 | 10 |
| **Upscale:** | | | | | | | | |
| **Downscale:** | | | | | | | | |

## Cylinder Information

| | | | | | | | | |
|---|---|---|---|---|---|---|---|---|
| **Zero Number:** | CC104356 | CC104356 | | CC104356 | CC104356 | ALM064841 | ALM064841 | CC104356 |
| **Zero Conc:** | 0 | 0 | | 0 | 0 | 0 | 0 | 0 |
| **Low Number:** | | | | | | ALM-001117 | ALM-001117 | |
| **Low Conc:** | | | | | | 297.1 | 297.1 | |
| **Mid Number:** | EB0141254 | EB0141254 | | CC701645 | CC146486 | AAL19987 | AAL19987 | CC325442 |
| **Mid Conc:** | 10.04 | 9.946 | | 3997 | 15.2 | 495.7 | 495.7 | 127.6 |
| **High Number:** | ALM066032 | ALM066032 | | CC303787 | XC034618B | CC347486 | CC347486 | CC428172 |
| **High Conc:** | 23.21 | 22.54 | | 7911 | 30.29 | 874.8 | 874.8 | 279.5 |
| **Bias Number:** | ALM066032 | EB0141254 | | CC701645 | CC146486 | AAL19987 | AAL19987 | CC325442 |
| **Bias Conc:** | 23.21 | 9.946 | | 3997 | 15.2 | 495.7 | 495.7 | 127.6 |

| MAQDAQ 1.0 | | | |
|---|---|---|---|
| Project Name: ODEQ ACI - Compliance Testing | Project Number: PROJ-021372 | CEMS Operator: SW | Unit/Condition: ACI |
| Run Length: 90 | Record Interval: 6 | Average Interval: 60 | Triplicate Sampling: True |
| Traverse: True | Ports: 1 | Points per port: 3 | DAQ Device: DT9806(01) |

| Calibration | | | | | | | | | |
|---|---|---|---|---|---|---|---|---|---|
| | **Name:** | O2 SN-719 | CO2 SN-719 | | CO SN-743 | SO2 SN-3 | THC SN-718 | CH4 SN-718 | NOx SN-695 |
| | **Make/Model:** | | | | | | | | |
| | **25A or 7E:** | 7E | 7E | | 7E | 7E | 25A | 25A | 7E |
| **Cylinder Concentrations** | | | | | | | | | |
| | **Zero:** | 0.000 | 0.000 | | 0.000 | 0.000 | 0.000 | 0.000 | 0.000 |
| | **Low:** | | | | | | 297.1 | 297.1 | |
| | **Mid:** | 10.04 | 9.946 | | 3997 | 15.20 | 495.7 | 495.7 | 127.6 |
| | **High:** | 23.21 | 22.54 | | 7911 | 30.29 | 874.8 | 874.8 | 279.5 |
| **Calibration Readings** | | | | | | | | | |
| | **Zero reading:** | 0.005 | 0.003 | | 7.600 | 0.314 | 0.090 | 0.030 | 0.096 |
| | **Low reading:** | 0.000 | 0.000 | | 0.000 | 0.000 | 307.0 | 307.9 | 0.000 |
| | **Mid reading:** | 10.04 | 9.918 | | 3980 | 15.68 | 510.3 | 510.9 | 128.7 |
| | **High reading:** | 23.21 | 22.54 | | 7926 | 30.31 | 874.2 | 873.3 | 279.7 |
| **EPA Method 7E Error Calculations** | | | | | | | | | |
| **Zero %Err:** | **<2.0** | 0.022 | 0.013 | | 0.096 | 1.037 | N/A | N/A | 0.034 |
| **Mid %Err:** | **<2.0** | 0.000 | -0.124 | | -0.215 | 1.585 | N/A | N/A | 0.394 |
| **High %Err:** | **<2.0** | 0.000 | 0.000 | | 0.190 | 0.066 | N/A | N/A | 0.072 |
| **EPA Method 25A Error Calculations** | | | | | | | | | |
| **Zero Err:** | **N/A** | N/A | N/A | | N/A | N/A | 0.090 | 0.030 | N/A |
| **Low Err:** | **5% of cyl** | N/A | N/A | | N/A | N/A | 9.900 | 10.80 | N/A |
| **Mid Err:** | **5% of cyl** | N/A | N/A | | N/A | N/A | 14.60 | 15.20 | N/A |
| **High Err:** | **N/A** | N/A | N/A | | N/A | N/A | -0.600 | -1.500 | N/A |

| MAQDAQ 1.0 | | | |
|---|---|---|---|
| Project Name: ODEQ ACI - Compliance Testing | Project Number: PROJ-021372 | CEMS Operator: SW | Unit/Condition: ACI |
| Run Length: 90 | Record Interval: 6 | Average Interval: 60 | Triplicate Sampling: True |
| Traverse: True | Ports: 1 | Points per port: 3 | DAQ Device: DT9806(01) |

## Analyzer Configuration

| | | | | | | | | |
|---|---|---|---|---|---|---|---|---|
| **Name:** | O2 SN-719 | CO2 SN-719 | | CO SN-743 | SO2 SN-3 | THC SN-718 | CH4 SN-718 | NOx SN-695 |
| **Make/Model:** | | | | | | | | |
| **25A or 7E:** | 7E | 7E | | 7E | 7E | 25A | 25A | 7E |
| **Voltage max:** | 10 | 10 | | 10 | 10 | 10 | 10 | 10 |
| **Voltage offset:** | 0 | 0 | | 0 | 0 | 0 | 0 | 0 |
| **Range:** | 10 | 10 | | 10 | 10 | 10 | 10 | 10 |
| **Upscale:** | | | | | | | | |
| **Downscale:** | | | | | | | | |

## Cylinder Information

| | | | | | | | | |
|---|---|---|---|---|---|---|---|---|
| **Zero Number:** | CC104356 | CC104356 | | CC104356 | CC104356 | ALM064841 | ALM064841 | CC104356 |
| **Zero Conc:** | 0 | 0 | | 0 | 0 | 0 | 0 | 0 |
| **Low Number:** | | | | | | ALM-001117 | ALM-001117 | |
| **Low Conc:** | | | | | | 297.1 | 297.1 | |
| **Mid Number:** | EB0141254 | EB0141254 | | CC701645 | CC146486 | AAL19987 | AAL19987 | CC325442 |
| **Mid Conc:** | 10.04 | 9.946 | | 3997 | 15.2 | 495.7 | 495.7 | 127.6 |
| **High Number:** | ALM066032 | ALM066032 | | CC303787 | XC034618B | CC347486 | CC347486 | CC428172 |
| **High Conc:** | 23.21 | 22.54 | | 7911 | 30.29 | 874.8 | 874.8 | 279.5 |
| **Bias Number:** | ALM066032 | EB0141254 | | CC701645 | CC146486 | AAL19987 | AAL19987 | CC325442 |
| **Bias Conc:** | 23.21 | 9.946 | | 3997 | 15.2 | 495.7 | 495.7 | 127.6 |

| MAQDAQ 1.0 | | | |
|---|---|---|---|
| Project Name: ODEQ ACI - Compliance Testing | Project Number: PROJ-021372 | CEMS Operator: SW | Unit/Condition: ACI |
| Run Length: 90 | Record Interval: 6 | Average Interval: 60 | Triplicate Sampling: True |
| Traverse: True | Ports: 1 | Points per port: 3 | DAQ Device: DT9806(01) |

| Calibration | | | | | | | | | |
|---|---|---|---|---|---|---|---|---|---|
| | **Name:** | O2 SN-719 | CO2 SN-719 | | CO SN-743 | SO2 SN-3 | THC SN-718 | CH4 SN-718 | NOx SN-695 |
| | **Make/Model:** | | | | | | | | |
| | **25A or 7E:** | 7E | 7E | | 7E | 7E | 25A | 25A | 7E |

| **Cylinder Concentrations** | | | | | | | | | |
|---|---|---|---|---|---|---|---|---|---|
| | **Zero:** | 0.000 | 0.000 | | 0.000 | 0.000 | 0.000 | 0.000 | 0.000 |
| | **Low:** | | | | | | 297.1 | 297.1 | |
| | **Mid:** | 10.04 | 9.946 | | 3997 | 15.20 | 495.7 | 495.7 | 127.6 |
| | **High:** | 23.21 | 22.54 | | 7911 | 30.29 | 874.8 | 874.8 | 279.5 |

| **Calibration Readings** | | | | | | | | | |
|---|---|---|---|---|---|---|---|---|---|
| | **Zero reading:** | 0.005 | 0.003 | | 7.600 | 0.174 | 0.090 | 0.030 | 0.096 |
| | **Low reading:** | 0.000 | 0.000 | | 0.000 | 0.000 | 307.0 | 307.9 | 0.000 |
| | **Mid reading:** | 10.04 | 9.918 | | 3980 | 15.49 | 510.3 | 510.9 | 128.7 |
| | **High reading:** | 23.21 | 22.54 | | 7926 | 30.33 | 874.2 | 873.3 | 279.7 |

| **EPA Method 7E Error Calculations** | | | | | | | | | |
|---|---|---|---|---|---|---|---|---|---|
| **Zero %Err:** | **<2.0** | 0.022 | 0.013 | | 0.096 | 0.574 | N/A | N/A | 0.034 |
| **Mid %Err:** | **<2.0** | 0.000 | -0.124 | | -0.215 | 0.957 | N/A | N/A | 0.394 |
| **High %Err:** | **<2.0** | 0.000 | 0.000 | | 0.190 | 0.132 | N/A | N/A | 0.072 |

| **EPA Method 25A Error Calculations** | | | | | | | | | |
|---|---|---|---|---|---|---|---|---|---|
| **Zero Err:** | **N/A** | N/A | N/A | | N/A | N/A | 0.090 | 0.030 | N/A |
| **Low Err:** | **5% of cyl** | N/A | N/A | | N/A | N/A | 9.900 | 10.80 | N/A |
| **Mid Err:** | **5% of cyl** | N/A | N/A | | N/A | N/A | 14.60 | 15.20 | N/A |
| **High Err:** | **N/A** | N/A | N/A | | N/A | N/A | -0.600 | -1.500 | N/A |

| MAQDAQ 1.0 | | | |
|---|---|---|---|
| Project Name: ODEQ ACI - Compliance Testing | Project Number: PROJ-021372 | CEMS Operator: SW | Unit/Condition: ACI |
| Run Length: 90 | Record Interval: 6 | Average Interval: 60 | Triplicate Sampling: True |
| Traverse: True | Ports: 1 | Points per port: 3 | DAQ Device: DT9806(01) |

| Initial bias | | | | | | | | | |
|---|---|---|---|---|---|---|---|---|---|
| | **Name:** | O2 SN-719 | CO2 SN-719 | | CO SN-743 | SO2 SN-3 | THC SN-718 | CH4 SN-718 | NOx SN-695 |
| | **Make/Model:** | | | | | | | | |
| | **25A or 7E:** | 7E | 7E | | 7E | 7E | 25A | 25A | 7E |
| **Cylinder Concentrations** | | | | | | | | | |
| | **Zero:** | 0.000 | 0.000 | | 0.000 | 0.000 | 0.000 | 0.000 | 0.000 |
| | **Low:** | | | | | | 297.1 | 297.1 | |
| | **Mid:** | 10.04 | 9.946 | | 3997 | 15.20 | 495.7 | 495.7 | 127.6 |
| | **High:** | 23.21 | 22.54 | | 7911 | 30.29 | 874.8 | 874.8 | 279.5 |
| **Calibration Readings** | | | | | | | | | |
| | **Zero reading:** | 0.005 | 0.003 | | 7.600 | 0.174 | 0.090 | 0.030 | 0.096 |
| | **Low reading:** | 0.000 | 0.000 | | 0.000 | 0.000 | 307.0 | 307.9 | 0.000 |
| | **Mid reading:** | 10.04 | 9.918 | | 3980 | 15.49 | 510.3 | 510.9 | 128.7 |
| | **High reading:** | 23.21 | 22.54 | | 7926 | 30.33 | 874.2 | 873.3 | 279.7 |
| **EPA Method 7E Error Calculations** | | | | | | | | | |
| **Zero %Err:** | **<2.0** | 0.022 | 0.013 | | 0.096 | 0.574 | N/A | N/A | 0.034 |
| **Mid %Err:** | **<2.0** | 0.000 | -0.124 | | -0.215 | 0.957 | N/A | N/A | 0.394 |
| **High %Err:** | **<2.0** | 0.000 | 0.000 | | 0.190 | 0.132 | N/A | N/A | 0.072 |
| **EPA Method 25A Error Calculations** | | | | | | | | | |
| **Zero %Err:** | **N/A** | N/A | N/A | | N/A | N/A | 0.090 | 0.030 | N/A |
| **Low %Err:** | **5% of cyl** | N/A | N/A | | N/A | N/A | 9.900 | 10.80 | N/A |
| **Mid %Err:** | **5% of cyl** | N/A | N/A | | N/A | N/A | 14.60 | 15.20 | N/A |
| **High %Err:** | **N/A** | N/A | N/A | | N/A | N/A | -0.600 | -1.500 | N/A |
| **Initial Bias Data** | | | | | | | | | |
| | **Zero reading:** | 0.047 | 0.015 | | 7.600 | -0.491 | N/A | N/A | 0.464 |
| | **Span reading:** | 22.95 | 9.873 | | 3952 | 15.29 | N/A | N/A | 127.4 |
| **Zero % bias:** | **<5.0** | 0.181 | 0.053 | | 0.000 | -2.195 | N/A | N/A | 0.132 |
| **Span % bias:** | **<5.0** | -1.120 | -0.200 | | -0.354 | -0.660 | N/A | N/A | -0.465 |

| MAQDAQ 1.0 | | | |
|---|---|---|---|
| Project Name: ODEQ ACI - Compliance Testing | Project Number: PROJ-021372 | CEMS Operator: SW | Unit/Condition: ACI |
| Run Length: 90 | Record Interval: 6 | Average Interval: 60 | Triplicate Sampling: True |
| Traverse: True | Ports: 1 | Points per port: 3 | DAQ Device: DT9806(01) |

## Analyzer Configuration

| | | | | | | | | |
|---|---|---|---|---|---|---|---|---|
| **Name:** | O2 SN-719 | CO2 SN-719 | | CO SN-743 | SO2 SN-3 | THC SN-718 | CH4 SN-718 | NOx SN-695 |
| **Make/Model:** | | | | | | | | |
| **25A or 7E:** | 7E | 7E | | 7E | 7E | 25A | 25A | 7E |
| **Voltage max:** | 10 | 10 | | 10 | 10 | 10 | 10 | 10 |
| **Voltage offset:** | 0 | 0 | | 0 | 0 | 0 | 0 | 0 |
| **Range:** | 10 | 10 | | 10 | 10 | 10 | 10 | 10 |
| **Upscale:** | | | | | | | | |
| **Downscale:** | | | | | | | | |

## Cylinder Information

| | | | | | | | | |
|---|---|---|---|---|---|---|---|---|
| **Zero Number:** | CC104356 | CC104356 | | CC104356 | CC104356 | ALM064841 | ALM064841 | CC104356 |
| **Zero Conc:** | 0 | 0 | | 0 | 0 | 0 | 0 | 0 |
| **Low Number:** | | | | | | ALM-001117 | ALM-001117 | |
| **Low Conc:** | | | | | | 297.1 | 297.1 | |
| **Mid Number:** | EB0141254 | EB0141254 | | CC701645 | CC146486 | AAL19987 | AAL19987 | CC325442 |
| **Mid Conc:** | 10.04 | 9.946 | | 3997 | 15.2 | 495.7 | 495.7 | 127.6 |
| **High Number:** | ALM066032 | ALM066032 | | CC303787 | XC034618B | CC347486 | CC347486 | CC428172 |
| **High Conc:** | 23.21 | 22.54 | | 7911 | 30.29 | 874.8 | 874.8 | 279.5 |
| **Bias Number:** | ALM066032 | EB0141254 | | CC701645 | CC146486 | AAL19987 | AAL19987 | CC325442 |
| **Bias Conc:** | 23.21 | 9.946 | | 3997 | 15.2 | 495.7 | 495.7 | 127.6 |

| MAQDAQ 1.0 | | | |
|---|---|---|---|
| Project Name: ODEQ ACI - Compliance Testing | Project Number: PROJ-021372 | CEMS Operator: SW | Unit/Condition: ACI |
| Run Length: 90 | Record Interval: 6 | Average Interval: 60 | Triplicate Sampling: True |
| Traverse: True | Ports: 1 | Points per port: 3 | DAQ Device: DT9806(01) |

| Calibration | | | | | | | | | |
|---|---|---|---|---|---|---|---|---|---|
| | **Name:** | O2 SN-719 | CO2 SN-719 | | CO SN-743 | SO2 SN-3 | THC SN-718 | CH4 SN-718 | NOx SN-695 |
| | **Make/Model:** | | | | | | | | |
| | **25A or 7E:** | 7E | 7E | | 7E | 7E | 25A | 25A | 7E |

| **Cylinder Concentrations** | | | | | | | | | |
|---|---|---|---|---|---|---|---|---|---|
| | **Zero:** | 0.000 | 0.000 | | 0.000 | 0.000 | 0.000 | 0.000 | 0.000 |
| | **Low:** | | | | | | 297.1 | 297.1 | |
| | **Mid:** | 10.04 | 9.946 | | 3997 | 15.20 | 495.7 | 495.7 | 127.6 |
| | **High:** | 23.21 | 22.54 | | 7911 | 30.29 | 874.8 | 874.8 | 279.5 |

| **Calibration Readings** | | | | | | | | | |
|---|---|---|---|---|---|---|---|---|---|
| | **Zero reading:** | 0.005 | 0.003 | | 7.600 | 0.269 | 0.090 | 0.030 | 0.096 |
| | **Low reading:** | 0.000 | 0.000 | | 0.000 | 0.000 | 307.0 | 307.9 | 0.000 |
| | **Mid reading:** | 10.04 | 9.918 | | 3980 | 15.16 | 510.3 | 510.9 | 128.7 |
| | **High reading:** | 23.21 | 22.54 | | 7926 | 30.15 | 874.2 | 873.3 | 279.7 |

| **EPA Method 7E Error Calculations** | | | | | | | | | |
|---|---|---|---|---|---|---|---|---|---|
| **Zero %Err:** | **<2.0** | 0.022 | 0.013 | | 0.096 | 0.888 | N/A | N/A | 0.034 |
| **Mid %Err:** | **<2.0** | 0.000 | -0.124 | | -0.215 | -0.132 | N/A | N/A | 0.394 |
| **High %Err:** | **<2.0** | 0.000 | 0.000 | | 0.190 | -0.462 | N/A | N/A | 0.072 |

| **EPA Method 25A Error Calculations** | | | | | | | | | |
|---|---|---|---|---|---|---|---|---|---|
| **Zero Err:** | **N/A** | N/A | N/A | | N/A | N/A | 0.090 | 0.030 | N/A |
| **Low Err:** | **5% of cyl** | N/A | N/A | | N/A | N/A | 9.900 | 10.80 | N/A |
| **Mid Err:** | **5% of cyl** | N/A | N/A | | N/A | N/A | 14.60 | 15.20 | N/A |
| **High Err:** | **N/A** | N/A | N/A | | N/A | N/A | -0.600 | -1.500 | N/A |

| MAQDAQ 1.0 | | | |
|---|---|---|---|
| Project Name: ODEQ ACI - Compliance Testing | Project Number: PROJ-021372 | CEMS Operator: SW | Unit/Condition: ACI |
| Run Length: 90 | Record Interval: 6 | Average Interval: 60 | Triplicate Sampling: True |
| Traverse: True | Ports: 1 | Points per port: 3 | DAQ Device: DT9806(01) |

| Initial bias | | | | | | | | | |
|---|---|---|---|---|---|---|---|---|---|
| | **Name:** | O2 SN-719 | CO2 SN-719 | | CO SN-743 | SO2 SN-3 | THC SN-718 | CH4 SN-718 | NOx SN-695 |
| | **Make/Model:** | | | | | | | | |
| | **25A or 7E:** | 7E | 7E | | 7E | 7E | 25A | 25A | 7E |

| **Cylinder Concentrations** | | | | | | | | | |
|---|---|---|---|---|---|---|---|---|---|
| | **Zero:** | 0.000 | 0.000 | | 0.000 | 0.000 | 0.000 | 0.000 | 0.000 |
| | **Low:** | | | | | | 297.1 | 297.1 | |
| | **Mid:** | 10.04 | 9.946 | | 3997 | 15.20 | 495.7 | 495.7 | 127.6 |
| | **High:** | 23.21 | 22.54 | | 7911 | 30.29 | 874.8 | 874.8 | 279.5 |

| **Calibration Readings** | | | | | | | | | |
|---|---|---|---|---|---|---|---|---|---|
| | **Zero reading:** | 0.005 | 0.003 | | 7.600 | 0.269 | 0.090 | 0.030 | 0.096 |
| | **Low reading:** | 0.000 | 0.000 | | 0.000 | 0.000 | 307.0 | 307.9 | 0.000 |
| | **Mid reading:** | 10.04 | 9.918 | | 3980 | 15.16 | 510.3 | 510.9 | 128.7 |
| | **High reading:** | 23.21 | 22.54 | | 7926 | 30.15 | 874.2 | 873.3 | 279.7 |

| **EPA Method 7E Error Calculations** | | | | | | | | | |
|---|---|---|---|---|---|---|---|---|---|
| **Zero %Err:** | **<2.0** | 0.022 | 0.013 | | 0.096 | 0.888 | N/A | N/A | 0.034 |
| **Mid %Err:** | **<2.0** | 0.000 | -0.124 | | -0.215 | -0.132 | N/A | N/A | 0.394 |
| **High %Err:** | **<2.0** | 0.000 | 0.000 | | 0.190 | -0.462 | N/A | N/A | 0.072 |

| **EPA Method 25A Error Calculations** | | | | | | | | | |
|---|---|---|---|---|---|---|---|---|---|
| **Zero %Err:** | **N/A** | N/A | N/A | | N/A | N/A | 0.090 | 0.030 | N/A |
| **Low %Err:** | **5% of cyl** | N/A | N/A | | N/A | N/A | 9.900 | 10.80 | N/A |
| **Mid %Err:** | **5% of cyl** | N/A | N/A | | N/A | N/A | 14.60 | 15.20 | N/A |
| **High %Err:** | **N/A** | N/A | N/A | | N/A | N/A | -0.600 | -1.500 | N/A |

| **Initial Bias Data** | | | | | | | | | |
|---|---|---|---|---|---|---|---|---|---|
| | **Zero reading:** | 0.047 | 0.015 | | 7.600 | 1.196 | N/A | N/A | 0.464 |
| | **Span reading:** | 22.95 | 9.873 | | 3952 | 14.60 | N/A | N/A | 127.4 |
| **Zero % bias:** | **<5.0** | 0.181 | 0.053 | | 0.000 | 3.060 | N/A | N/A | 0.132 |
| **Span % bias:** | **<5.0** | -1.120 | -0.200 | | -0.354 | -1.849 | N/A | N/A | -0.465 |

| MAQDAQ 1.0 | | | |
|---|---|---|---|
| Project Name: ODEQ ACI - Compliance Testing | Project Number: PROJ-021372 | CEMS Operator: SW | Unit/Condition: ACI |
| Run Length: 90 | Record Interval: 6 | Average Interval: 60 | Triplicate Sampling: True |
| Traverse: True | Ports: 1 | Points per port: 3 | DAQ Device: DT9806(01) |

## Analyzer Configuration

| | | | | | | | | |
|---|---|---|---|---|---|---|---|---|
| **Name:** | O2 SN-719 | CO2 SN-719 | | CO SN-743 | SO2 SN-3 | THC SN-718 | CH4 SN-718 | NOx SN-695 |
| **Make/Model:** | | | | | | | | |
| **25A or 7E:** | 7E | 7E | | 7E | 7E | 25A | 25A | 7E |
| **Voltage max:** | 10 | 10 | | 10 | 10 | 10 | 10 | 10 |
| **Voltage offset:** | 0 | 0 | | 0 | 0 | 0 | 0 | 0 |
| **Range:** | 10 | 10 | | 10 | 10 | 10 | 10 | 10 |
| **Upscale:** | | | | | | | | |
| **Downscale:** | | | | | | | | |

## Cylinder Information

| | | | | | | | | |
|---|---|---|---|---|---|---|---|---|
| **Zero Number:** | CC104356 | CC104356 | | CC104356 | CC104356 | ALM064841 | ALM064841 | CC104356 |
| **Zero Conc:** | 0 | 0 | | 0 | 0 | 0 | 0 | 0 |
| **Low Number:** | | | | | | ALM-001117 | ALM-001117 | |
| **Low Conc:** | | | | | | 297.1 | 297.1 | |
| **Mid Number:** | EB0141254 | EB0141254 | | CC701645 | CC146486 | AAL19987 | AAL19987 | CC325442 |
| **Mid Conc:** | 10.04 | 9.946 | | 3997 | 15.2 | 495.7 | 495.7 | 127.6 |
| **High Number:** | ALM066032 | ALM066032 | | CC303787 | XC034618B | CC347486 | CC347486 | CC428172 |
| **High Conc:** | 23.21 | 22.54 | | 7911 | 30.29 | 874.8 | 874.8 | 279.5 |
| **Bias Number:** | ALM066032 | EB0141254 | | CC701645 | XC034618B | AAL19987 | AAL19987 | CC325442 |
| **Bias Conc:** | 23.21 | 9.946 | | 3997 | 30.29 | 495.7 | 495.7 | 127.6 |

| MAQDAQ 1.0 | | | |
|---|---|---|---|
| Project Name: ODEQ ACI - Compliance Testing | Project Number: PROJ-021372 | CEMS Operator: SW | Unit/Condition: ACI |
| Run Length: 90 | Record Interval: 6 | Average Interval: 60 | Triplicate Sampling: True |
| Traverse: True | Ports: 1 | Points per port: 3 | DAQ Device: DT9806(01) |

| Calibration | | | | | | | | | |
|---|---|---|---|---|---|---|---|---|---|
| | **Name:** | O2 SN-719 | CO2 SN-719 | | CO SN-743 | SO2 SN-3 | THC SN-718 | CH4 SN-718 | NOx SN-695 |
| | **Make/Model:** | | | | | | | | |
| | **25A or 7E:** | 7E | 7E | | 7E | 7E | 25A | 25A | 7E |

| **Cylinder Concentrations** | | | | | | | | | |
|---|---|---|---|---|---|---|---|---|---|
| | **Zero:** | 0.000 | 0.000 | | 0.000 | 0.000 | 0.000 | 0.000 | 0.000 |
| | **Low:** | | | | | | 297.1 | 297.1 | |
| | **Mid:** | 10.04 | 9.946 | | 3997 | 15.20 | 495.7 | 495.7 | 127.6 |
| | **High:** | 23.21 | 22.54 | | 7911 | 30.29 | 874.8 | 874.8 | 279.5 |

| **Calibration Readings** | | | | | | | | | |
|---|---|---|---|---|---|---|---|---|---|
| | **Zero reading:** | 0.032 | -0.105 | | -5.500 | 0.107 | 0.370 | 0.180 | 0.196 |
| | **Low reading:** | 0.000 | 0.000 | | 0.000 | 0.000 | 306.9 | 307.9 | 0.000 |
| | **Mid reading:** | 9.998 | 9.863 | | 3989 | 15.28 | 511.1 | 511.3 | 129.7 |
| | **High reading:** | 23.21 | 22.61 | | 7870 | 30.34 | 873.8 | 874.6 | 282.1 |

| **EPA Method 7E Error Calculations** | | | | | | | | | |
|---|---|---|---|---|---|---|---|---|---|
| **Zero %Err:** | **<2.0** | 0.138 | -0.466 | | -0.070 | 0.353 | N/A | N/A | 0.070 |
| **Mid %Err:** | **<2.0** | -0.181 | -0.368 | | -0.101 | 0.264 | N/A | N/A | 0.751 |
| **High %Err:** | **<2.0** | 0.000 | 0.311 | | -0.518 | 0.165 | N/A | N/A | 0.930 |

| **EPA Method 25A Error Calculations** | | | | | | | | | |
|---|---|---|---|---|---|---|---|---|---|
| **Zero Err:** | **N/A** | N/A | N/A | | N/A | N/A | 0.370 | 0.180 | N/A |
| **Low Err:** | **5% of cyl** | N/A | N/A | | N/A | N/A | 9.800 | 10.80 | N/A |
| **Mid Err:** | **5% of cyl** | N/A | N/A | | N/A | N/A | 15.40 | 15.60 | N/A |
| **High Err:** | **N/A** | N/A | N/A | | N/A | N/A | -1.000 | -0.200 | N/A |

| MAQDAQ 1.0 | | | |
|---|---|---|---|
| Project Name: ODEQ ACI - Compliance Testing | Project Number: PROJ-021372 | CEMS Operator: SW | Unit/Condition: ACI |
| Run Length: 90 | Record Interval: 6 | Average Interval: 60 | Triplicate Sampling: True |
| Traverse: True | Ports: 1 | Points per port: 3 | DAQ Device: DT9806(01) |

| Initial bias | | | | | | | | | |
|---|---|---|---|---|---|---|---|---|---|
| | **Name:** | O2 SN-719 | CO2 SN-719 | | CO SN-743 | SO2 SN-3 | THC SN-718 | CH4 SN-718 | NOx SN-695 |
| | **Make/Model:** | | | | | | | | |
| | **25A or 7E:** | 7E | 7E | | 7E | 7E | 25A | 25A | 7E |
| **Cylinder Concentrations** | | | | | | | | | |
| | **Zero:** | 0.000 | 0.000 | | 0.000 | 0.000 | 0.000 | 0.000 | 0.000 |
| | **Low:** | | | | | | 297.1 | 297.1 | |
| | **Mid:** | 10.04 | 9.946 | | 3997 | 15.20 | 495.7 | 495.7 | 127.6 |
| | **High:** | 23.21 | 22.54 | | 7911 | 30.29 | 874.8 | 874.8 | 279.5 |
| **Calibration Readings** | | | | | | | | | |
| | **Zero reading:** | 0.032 | -0.105 | | -5.500 | 0.107 | 0.370 | 0.180 | 0.196 |
| | **Low reading:** | 0.000 | 0.000 | | 0.000 | 0.000 | 306.9 | 307.9 | 0.000 |
| | **Mid reading:** | 9.998 | 9.863 | | 3989 | 15.28 | 511.1 | 511.3 | 129.7 |
| | **High reading:** | 23.21 | 22.61 | | 7870 | 30.34 | 873.8 | 874.6 | 282.1 |
| **EPA Method 7E Error Calculations** | | | | | | | | | |
| **Zero %Err:** | **<2.0** | 0.138 | -0.466 | | -0.070 | 0.353 | N/A | N/A | 0.070 |
| **Mid %Err:** | **<2.0** | -0.181 | -0.368 | | -0.101 | 0.264 | N/A | N/A | 0.751 |
| **High %Err:** | **<2.0** | 0.000 | 0.311 | | -0.518 | 0.165 | N/A | N/A | 0.930 |
| **EPA Method 25A Error Calculations** | | | | | | | | | |
| **Zero %Err:** | **N/A** | N/A | N/A | | N/A | N/A | 0.370 | 0.180 | N/A |
| **Low %Err:** | **5% of cyl** | N/A | N/A | | N/A | N/A | 9.800 | 10.80 | N/A |
| **Mid %Err:** | **5% of cyl** | N/A | N/A | | N/A | N/A | 15.40 | 15.60 | N/A |
| **High %Err:** | **N/A** | N/A | N/A | | N/A | N/A | -1.000 | -0.200 | N/A |
| **Initial Bias Data** | | | | | | | | | |
| | **Zero reading:** | 0.018 | -0.013 | | 7.000 | 0.308 | N/A | N/A | 2.416 |
| | **Span reading:** | 22.93 | 9.959 | | 4001 | 29.37 | N/A | N/A | 127.0 |
| **Zero % bias:** | **<5.0** | -0.060 | 0.408 | | 0.158 | 0.664 | N/A | N/A | 0.794 |
| **Span % bias:** | **<5.0** | -1.206 | 0.426 | | 0.152 | -3.202 | N/A | N/A | -0.966 |

Airgas
an Air Liquide company

**Airgas Specialty Gases**
Airgas USA LLC
525 North Industrial Loop Road
Tooele, UT 84074
Airgas.com

# CERTIFICATE OF BATCH ANALYSIS

## Grade of Product: CEM-CAL ZERO

| | | | |
|---|---|---|---|
| Part Number: | AI CZ15A | Reference Number: | 153-402699514-1 |
| Cylinder Analyzed: | ALM018572 | Cylinder Volume: | 146.0 CF |
| Laboratory: | 124 - Tooele (SAP) - UT | Cylinder Pressure: | 2000 PSIG |
| Analysis Date: | Mar 23, 2023 | Valve Outlet: | 590 |
| Lot Number: | 153-402699514-1 | | |

## ANALYTICAL RESULTS

| Component | Requested Purity | | Certified Concentration |
|---|---|---|---|
| AIR | | | |
| NOx | 0.1 PPM | <LDL | 0.02 PPM |
| Sulfur Dioxide | 0.1 PPM | <LDL | 0.1 PPM |
| THC | 0.1 PPM | <LDL | 0.03 PPM |
| Carbon Monoxide | 0.5 PPM | | 0.06 PPM |
| Carbon Dioxide | 1.0 PPM | | 0.08 PPM |
| Percent Oxygen | 20-21 % | | 20.90 % |

**Permanent Notes:** Airgas certifies that the contents of this cylinder meet the requirements of 40 CFR 72.2

**Cylinders in Batch:**

ALM018572, ALM034088, ALM047780, ALM049436, ALM056432, ALM064841

Impurities verified against analytical standards traceable to NIST by weight and/or analysis.

**Approved for Release**

**Airgas Specialty Gases**
Airgas USA LLC
525 North Industrial Loop Road
Tooele, UT 84074
Airgas.com

# CERTIFICATE OF BATCH ANALYSIS

## Grade of Product: CEM-CAL ZERO

| | | | |
|---|---|---|---|
| Part Number: | NI CZ15A | Reference Number: | 153-402282236-1 |
| Cylinder Analyzed: | CC505152 | Cylinder Volume: | 142.0 CF |
| Laboratory: | 124 - Tooele (SAP) - UT | Cylinder Pressure: | 2000 PSIG |
| Analysis Date: | Nov 11, 2021 | Valve Outlet: | 580 |
| Lot Number: | 153-402282236-1 | | |

**Expiration Date: Nov 11, 2029**

## ANALYTICAL RESULTS

| Component | Requested Purity | | Certified Concentration |
|---|---|---|---|
| NITROGEN | 99.9995 % | | 99.9995 % |
| CARBON DIOXIDE | 1.0 PPM | <LDL | 0.03 PPM |
| NOx | 0.1 PPM | <LDL | 0.02 PPM |
| SO2 | 0.1 PPM | <LDL | 0.1 PPM |
| THC | 0.1 PPM | <LDL | 0.05 PPM |
| CARBON MONOXIDE | 0.5 PPM | <LDL | 0.03 PPM |

**Permanent Notes:** Airgas certifies that the contents of this cylinder meet the requirements of 40 CFR 72.2

**Cylinders in Batch:**

AL-056690, ALM 066709, ALM-006643, ALM-031582, ALM019873, ALM066524, ALM52660, CC 39238, CC104356, CC254424, CC26579., CC328067, CC359119, CC476263, CC480013, CC484472, CC505152, CC52853, CC69098, CC702029, CC725339, CC733101, CC88736, EB0070017, EB0086820, EB0086878, EB0122805, EB0122927, EB0141786, EB0141913, SG9197151BAL, XC015860B

Impurities verified against analytical standards traceable to NIST by weight and/or analysis.

**Signature on file**

**Approved for Release**

**Airgas Specialty Gases**
Airgas USA LLC
525 North Industrial Loop Road
Tooele, UT 84074
Airgas.com

# CERTIFICATE OF ANALYSIS

## Grade of Product: EPA PROTOCOL STANDARD

| | | | |
|---|---|---|---|
| Part Number: | E03NI80E15A0138 | Reference Number: | 153-402298004-1 |
| Cylinder Number: | EB0141254 | Cylinder Volume: | 150.9 CF |
| Laboratory: | 124 - Tooele (SAP) - UT | Cylinder Pressure: | 2015 PSIG |
| PGVP Number: | B72021 | Valve Outlet: | 590 |
| Gas Code: | CO2,O2,BALN | Certification Date: | Dec 10, 2021 |

**Expiration Date: Dec 10, 2029**

Certification performed in accordance with "EPA Traceability Protocol for Assay and Certification of Gaseous Calibration Standards (May 2012)" document EPA 600/R-12/531, using the assay procedures listed. Analytical Methodology does not require correction for analytical interference. This cylinder has a total analytical uncertainty as stated below with a confidence level of 95%. There are no significant impurities which affect the use of this calibration mixture. All concentrations are on a mole/mole basis unless otherwise noted. The results relate only to the items tested. The report shall not be reproduced except in full without approval of the laboratory. Do Not Use This Cylinder below 100 psig, i.e. 0.7 megapascals.

### ANALYTICAL RESULTS

| Component | Requested Concentration | Actual Concentration | Protocol Method | Total Relative Uncertainty | Assay Dates |
|---|---|---|---|---|---|
| CARBON DIOXIDE | 10.00 % | 9.946 % | G1 | +/- 0.7% NIST Traceable | 12/10/2021 |
| OXYGEN | 10.00 % | 10.04 % | G1 | +/- 0.9% NIST Traceable | 12/10/2021 |
| NITROGEN | Balance | | | | |

### CALIBRATION STANDARDS

| Type | Lot ID | Cylinder No | Concentration | Uncertainty | Expiration Date |
|---|---|---|---|---|---|
| NTRM | 13060405 | CC411744 | 7.489 % CARBON DIOXIDE/NITROGEN | 0.6% | May 14, 2025 |
| NTRM | 98051010 | SG9161286BAL | 12.05 % OXYGEN/NITROGEN | 0.7% | Dec 14, 2023 |

### ANALYTICAL EQUIPMENT

| Instrument/Make/Model | Analytical Principle | Last Multipoint Calibration |
|---|---|---|
| Horiba VIA-510 SV4MEUTJ CO2 | CO2 NDIR (Dixon) | Nov 24, 2021 |
| Horiba MPA-510 W603MM58 O2 | O2 Paramagnetic (Mason) | Dec 01, 2021 |

**Triad Data Available Upon Request**

**Signature on file**

**Approved for Release**

Airgas
an Air Liquide company

Airgas USA, LLC
525 North Industrial Loop Road
Tooele, UT 84074
Airgas.com

# CERTIFICATE OF ANALYSIS

## Grade of Product: EPA Protocol

| | | | |
|---|---|---|---|
| Part Number: | E03NI54E15A3808 | Reference Number: | 153-402267562-1 |
| Cylinder Number: | ALM066032 | Cylinder Volume: | 162.7 CF |
| Laboratory: | 124 - Tooele (SAP) - UT | Cylinder Pressure: | 2015 PSIG |
| PGVP Number: | B72021 | Valve Outlet: | 590 |
| Gas Code: | CO2,O2,BALN | Certification Date: | Nov 01, 2021 |

**Expiration Date: Nov 01, 2029**

Certification performed in accordance with "EPA Traceability Protocol for Assay and Certification of Gaseous Calibration Standards (May 2012)" document EPA 600/R-12/531, using the assay procedures listed. Analytical Methodology does not require correction for analytical interference. This cylinder has a total analytical uncertainty as stated below with a confidence level of 95%. There are no significant impurities which affect the use of this calibration mixture. All concentrations are on a mole/mole basis unless otherwise noted.

Do Not Use This Cylinder below 100 psig, i.e. 0.7 megapascals.

### ANALYTICAL RESULTS

| Component | Requested Concentration | Actual Concentration | Protocol Method | Total Relative Uncertainty | Assay Dates |
|---|---|---|---|---|---|
| CARBON DIOXIDE | 23.00 % | 22.54 % | G1 | +/- 0.7% NIST Traceable | 11/01/2021 |
| OXYGEN | 23.00 % | 23.21 % | G1 | +/- 1.4% NIST Traceable | 11/01/2021 |
| NITROGEN | Balance | | | | |

### CALIBRATION STANDARDS

| Type | Lot ID | Cylinder No | Concentration | Uncertainty | Expiration Date |
|---|---|---|---|---|---|
| NTRM | 13060802 | CC415397 | 24.04 % CARBON DIOXIDE/NITROGEN | 0.6% | Dec 11, 2025 |
| NTRM | 12062008 | CC367433 | 22.883 % OXYGEN/NITROGEN | 0.2% | May 14, 2024 |

### ANALYTICAL EQUIPMENT

| Instrument/Make/Model | Analytical Principle | Last Multipoint Calibration |
|---|---|---|
| Horiba VIA-510 SV4MEUTJ CO2 | CO2 NDIR (Dixon) | Oct 28, 2021 |
| Horiba MPA-510 W603MM58 O2 | O2 Paramagnetic (Mason) | Oct 07, 2021 |

**Triad Data Available Upon Request**

**Approved for Release**

Airgas
an Air Liquide company

Airgas USA, LLC
525 North Industrial Loop Road
Tooele, UT 84074
Airgas.com

# CERTIFICATE OF ANALYSIS

## Grade of Product: EPA Protocol

| | | | |
|---|---|---|---|
| Part Number: | E04NI94E15A00M9 | Reference Number: | 153-402267563-1 |
| Cylinder Number: | CC701645 | Cylinder Volume: | 144.0 CF |
| Laboratory: | 124 - Tooele (SAP) - UT | Cylinder Pressure: | 2016 PSIG |
| PGVP Number: | B72021 | Valve Outlet: | 660 |
| Gas Code: | CO,CO2,NO,NOX,BALN | Certification Date: | Nov 08, 2021 |

**Expiration Date: Nov 08, 2029**

Certification performed in accordance with "EPA Traceability Protocol for Assay and Certification of Gaseous Calibration Standards (May 2012)" document EPA 600/R-12/531, using the assay procedures listed. Analytical Methodology does not require correction for analytical interference. This cylinder has a total analytical uncertainty as stated below with a confidence level of 95%. There are no significant impurities which affect the use of this calibration mixture. All concentrations are on a mole/mole basis unless otherwise noted.

Do Not Use This Cylinder below 100 psig, i.e. 0.7 megapascals.

### ANALYTICAL RESULTS

| Component | Requested Concentration | Actual Concentration | Protocol Method | Total Relative Uncertainty | Assay Dates |
|---|---|---|---|---|---|
| NOX | 4000 PPM | 4132 PPM | G1 | +/- 0.7% NIST Traceable | 11/01/2021, 11/08/2021 |
| CARBON MONOXIDE | 4000 PPM | 3997 PPM | G1 | +/- 0.5% NIST Traceable | 11/02/2021 |
| NITRIC OXIDE | 4000 PPM | 4125 PPM | G1 | +/- 0.8% NIST Traceable | 11/01/2021, 11/08/2021 |
| CARBON DIOXIDE | 5.000 % | 4.962 % | G1 | +/- 0.7% NIST Traceable | 11/01/2021 |
| NITROGEN | Balance | | | | |

### CALIBRATION STANDARDS

| Type | Lot ID | Cylinder No | Concentration | Uncertainty | Expiration Date |
|---|---|---|---|---|---|
| NTRM | 08012221 | KAL004583 | 2466 PPM CARBON MONOXIDE/NITROGEN | 0.5% | May 09, 2024 |
| PRM | 12386 | D685025 | 9.91 PPM NITROGEN DIOXIDE/AIR | 2.0% | Feb 20, 2020 |
| NTRM | 14061036 | CC437174 | 2990 PPM NITRIC OXIDE/NITROGEN | 0.6% | Mar 13, 2026 |
| GMIS | 401648675102 | CC500959 | 5.074 PPM NITROGEN DIOXIDE/NITROGEN | 2.1% | Feb 01, 2023 |
| NTRM | 06010609 | K017874 | 7.016 % CARBON DIOXIDE/NITROGEN | 0.5% | Jan 13, 2022 |

The SRM, PRM or RGM noted above is only in reference to the GMIS used in the assay and not part of the analysis.

### ANALYTICAL EQUIPMENT

| Instrument/Make/Model | Analytical Principle | Last Multipoint Calibration |
|---|---|---|
| Nicolet iS50 AUP2110269 CO2 HCO2 | FTIR | Oct 07, 2021 |
| Siemens Ultramat 6 7MB21231AD200AM1 HCO | NDIR | Oct 07, 2021 |
| Nicolet iS50 AUP2110269 NO H2NO | FTIR | Oct 20, 2021 |
| Nicolet iS50 AUP2110269 NO2 impurity | FTIR NO2 impurity | Oct 21, 2021 |

**Triad Data Available Upon Request**

**Approved for Release**

Airgas
an Air Liquide company

Airgas USA, LLC
525 North Industrial Loop Road
Tooele, UT 84074
Airgas.com

# CERTIFICATE OF ANALYSIS

## Grade of Product: EPA Protocol

| | | | |
|---|---|---|---|
| Part Number: | E04NI93E15A0033 | Reference Number: | 153-402270026-1 |
| Cylinder Number: | CC303787 | Cylinder Volume: | 144.0 CF |
| Laboratory: | 124 - Tooele (SAP) - UT | Cylinder Pressure: | 2016 PSIG |
| PGVP Number: | B72021 | Valve Outlet: | 660 |
| Gas Code: | CO,CO2,NO,NOX,BALN | Certification Date: | Nov 15, 2021 |

**Expiration Date: Nov 15, 2029**

Certification performed in accordance with "EPA Traceability Protocol for Assay and Certification of Gaseous Calibration Standards (May 2012)" document EPA 600/R-12/531, using the assay procedures listed. Analytical Methodology does not require correction for analytical interference. This cylinder has a total analytical uncertainty as stated below with a confidence level of 95%. There are no significant impurities which affect the use of this calibration mixture. All concentrations are on a mole/mole basis unless otherwise noted.

Do Not Use This Cylinder below 100 psig, i.e. 0.7 megapascals.

### ANALYTICAL RESULTS

| Component | Requested Concentration | Actual Concentration | Protocol Method | Total Relative Uncertainty | Assay Dates |
|---|---|---|---|---|---|
| NOX | 8000 PPM | 8271 PPM | G1 | +/- 1.0% NIST Traceable | 11/08/2021, 11/15/2021 |
| CARBON MONOXIDE | 8000 PPM | 7911 PPM | G1 | +/- 0.7% NIST Traceable | 11/09/2021 |
| NITRIC OXIDE | 8000 PPM | 8269 PPM | G1 | +/- 1.0% NIST Traceable | 11/08/2021, 11/15/2021 |
| CARBON DIOXIDE | 5.000 % | 4.821 % | G1 | +/- 1.3% NIST Traceable | 11/08/2021 |
| NITROGEN | Balance | | | | |

### CALIBRATION STANDARDS

| Type | Lot ID | Cylinder No | Concentration | Uncertainty | Expiration Date |
|---|---|---|---|---|---|
| NTRM | 08012328 | KAL004661 | 4857 PPM CARBON MONOXIDE/NITROGEN | 0.6% | Jun 07, 2024 |
| PRM | 12386 | D685025 | 9.91 PPM NITROGEN DIOXIDE/AIR | 2.0% | Feb 20, 2020 |
| GMIS | 124595198101 | CC154403 | 9454 PPM NITRIC OXIDE/NITROGEN | 0.4% | May 01, 2026 |
| PRM | 12367 | CC445234 | 1.0125 % NITRIC OXIDE/NITROGEN | 0.3% | Aug 12, 2020 |
| GMIS | 401648675102 | CC500959 | 5.074 PPM NITROGEN DIOXIDE/NITROGEN | 2.1% | Feb 01, 2023 |
| NTRM | 06010609 | K017874 | 7.016 % CARBON DIOXIDE/NITROGEN | 0.5% | Jan 13, 2022 |

The SRM, PRM or RGM noted above is only in reference to the GMIS used in the assay and not part of the analysis.

### ANALYTICAL EQUIPMENT

| Instrument/Make/Model | Analytical Principle | Last Multipoint Calibration |
|---|---|---|
| Nicolet iS50 AUP2110269 CO2 HCO2 | FTIR | Nov 04, 2021 |
| Siemens Ultramat 6 7MB21231AD200AM1 HCO | NDIR | Nov 04, 2021 |
| Nicolet iS50 AUP2110269 NO H2NO | FTIR | Oct 20, 2021 |
| Nicolet iS50 AUP2110269 NO2 impurity | FTIR NO2 impurity | Oct 21, 2021 |

**Triad Data Available Upon Request**

**Approved for Release**

Airgas
an Air Liquide company

Airgas USA, LLC
525 North Industrial Loop Road
Tooele, UT 84074
Airgas.com

# CERTIFICATE OF ANALYSIS

## Grade of Product: EPA Protocol

| | | | |
|---|---|---|---|
| Part Number: | E02NI99E15A0383 | Reference Number: | 153-401683128-1 |
| Cylinder Number: | CC146486 | Cylinder Volume: | 144.3 CF |
| Laboratory: | 124 - Tooele (SAP) - UT | Cylinder Pressure: | 2015 PSIG |
| PGVP Number: | B72019 | Valve Outlet: | 660 |
| Gas Code: | SO2,BALN | Certification Date: | Dec 30, 2019 |

**Expiration Date: Dec 30, 2023**

Certification performed in accordance with "EPA Traceability Protocol for Assay and Certification of Gaseous Calibration Standards (May 2012)" document EPA 600/R-12/531, using the assay procedures listed. Analytical Methodology does not require correction for analytical interference. This cylinder has a total analytical uncertainty as stated below with a confidence level of 95%. There are no significant impurities which affect the use of this calibration mixture. All concentrations are on a mole/mole basis unless otherwise noted.

Do Not Use This Cylinder below 100 psig, i.e. 0.7 megapascals.

### ANALYTICAL RESULTS

| Component | Requested Concentration | Actual Concentration | Protocol Method | Total Relative Uncertainty | Assay Dates |
|---|---|---|---|---|---|
| SULFUR DIOXIDE | 15.00 PPM | 15.20 PPM | G1 | +/- 1.0% NIST Traceable | 12/23/2019, 12/30/2019 |
| NITROGEN | Balance | | | | |

### CALIBRATION STANDARDS

| Type | Lot ID | Cylinder No | Concentration | Uncertainty | Expiration Date |
|---|---|---|---|---|---|
| NTRM | 17060716 | CC486245 | 15.90 PPM SULFUR DIOXIDE/NITROGEN | 0.9% | Jul 23, 2023 |

### ANALYTICAL EQUIPMENT

| Instrument/Make/Model | Analytical Principle | Last Multipoint Calibration |
|---|---|---|
| Nicolet 6700 AMP0900119 SO2 LSO2 | FTIR | Dec 11, 2019 |

**Triad Data Available Upon Request**

**Approved for Release**

Airgas
an Air Liquide company

Airgas USA, LLC
525 North Industrial Loop Road
Tooele, UT 84074
Airgas.com

# CERTIFICATE OF ANALYSIS

## Grade of Product: EPA Protocol

| | | | |
|---|---|---|---|
| Part Number: | E02NI99E15A0384 | Reference Number: | 153-401683129-1 |
| Cylinder Number: | XC034618B | Cylinder Volume: | 144.4 CF |
| Laboratory: | 124 - Tooele (SAP) - UT | Cylinder Pressure: | 2015 PSIG |
| PGVP Number: | B72019 | Valve Outlet: | 660 |
| Gas Code: | SO2,BALN | Certification Date: | Dec 30, 2019 |

**Expiration Date: Dec 30, 2023**

Certification performed in accordance with "EPA Traceability Protocol for Assay and Certification of Gaseous Calibration Standards (May 2012)" document EPA 600/R-12/531, using the assay procedures listed. Analytical Methodology does not require correction for analytical interference. This cylinder has a total analytical uncertainty as stated below with a confidence level of 95%. There are no significant impurities which affect the use of this calibration mixture. All concentrations are on a mole/mole basis unless otherwise noted.

Do Not Use This Cylinder below 100 psig, i.e. 0.7 megapascals.

### ANALYTICAL RESULTS

| Component | Requested Concentration | Actual Concentration | Protocol Method | Total Relative Uncertainty | Assay Dates |
|---|---|---|---|---|---|
| SULFUR DIOXIDE | 30.00 PPM | 30.29 PPM | G1 | +/- 1.0% NIST Traceable | 12/23/2019, 12/30/2019 |
| NITROGEN | Balance | | | | |

### CALIBRATION STANDARDS

| Type | Lot ID | Cylinder No | Concentration | Uncertainty | Expiration Date |
|---|---|---|---|---|---|
| NTRM | 14010323 | KAL004046 | 49.08 PPM SULFUR DIOXIDE/NITROGEN | 1.0% | Apr 17, 2024 |

### ANALYTICAL EQUIPMENT

| Instrument/Make/Model | Analytical Principle | Last Multipoint Calibration |
|---|---|---|
| Nicolet 6700 AMP0900119 SO2 LSO2 | FTIR | Dec 11, 2019 |

**Triad Data Available Upon Request**

**Approved for Release**

Airgas
an Air Liquide company

**Airgas Specialty Gases**
Airgas USA LLC
525 North Industrial Loop Road
Tooele, UT 84074
Airgas.com

# CERTIFICATE OF ANALYSIS

## Grade of Product: EPA PROTOCOL STANDARD

| | | | |
|---|---|---|---|
| Part Number: | E04NI94E15A00G3 | Reference Number: | 153-402560678-1 |
| Cylinder Number: | CC325442 | Cylinder Volume: | 147.0 CF |
| Laboratory: | 124 - Tooele (SAP) - UT | Cylinder Pressure: | 2015 PSIG |
| PGVP Number: | B72022 | Valve Outlet: | 660 |
| Gas Code: | CO,CO2,NO,NOX,BALN | Certification Date: | Oct 17, 2022 |

**Expiration Date: Oct 17, 2030**

Certification performed in accordance with "EPA Traceability Protocol for Assay and Certification of Gaseous Calibration Standards (May 2012)" document EPA 600/R-12/531, using the assay procedures listed. Analytical Methodology does not require correction for analytical interference. This cylinder has a total analytical uncertainty as stated below with a confidence level of 95%. There are no significant impurities which affect the use of this calibration mixture. All concentrations are on a mole/mole basis unless otherwise noted.

Do Not Use This Cylinder below 100 psig, i.e. 0.7 megapascals.

### ANALYTICAL RESULTS

| Component | Requested Concentration | Actual Concentration | Protocol Method | Total Relative Uncertainty | Assay Dates |
|---|---|---|---|---|---|
| NOX | 127.0 PPM | 127.6 PPM | G1 | +/- 1.4% NIST Traceable | 10/10/2022, 10/17/2022 |
| CARBON MONOXIDE | 125.0 PPM | 125.5 PPM | G1 | +/- 0.6% NIST Traceable | 10/11/2022 |
| NITRIC OXIDE | 127.0 PPM | 127.1 PPM | G1 | +/- 1.2% NIST Traceable | 10/10/2022, 10/17/2022 |
| CARBON DIOXIDE | 5.000 % | 4.972 % | G1 | +/- 1.1% NIST Traceable | 10/10/2022 |
| NITROGEN | Balance | | | | |

### CALIBRATION STANDARDS

| Type | Lot ID | Cylinder No | Concentration | Uncertainty | Expiration Date |
|---|---|---|---|---|---|
| NTRM | 09010240 | KAL004893 | 98.48 PPM CARBON MONOXIDE/NITROGEN | 0.5% | Oct 16, 2024 |
| PRM | 12409 | D913660 | 15.01 PPM NITROGEN DIOXIDE/AIR | 1.5% | Feb 17, 2023 |
| NTRM | 20061028 | CC733255 | 98.61 PPM NITRIC OXIDE/NITROGEN | 0.9% | Oct 06, 2026 |
| GMIS | 1534012021103 | ND73012 | 4.956 PPM NITROGEN DIOXIDE/NITROGEN | 1.6% | Jun 15, 2025 |
| NTRM | 19060404 | 6162650Y | 11.105 % CARBON DIOXIDE/NITROGEN | 0.6% | Dec 04, 2025 |

The SRM, PRM or RGM noted above is only in reference to the GMIS used in the assay and not part of the analysis.

### ANALYTICAL EQUIPMENT

| Instrument/Make/Model | Analytical Principle | Last Multipoint Calibration |
|---|---|---|
| Nicolet iS50 AUP2010228 CO2 HCO2 | FTIR | Sep 21, 2022 |
| Siemens Ultramat 6 7MB21231AD200AM1 LCO | NDIR | Sep 28, 2022 |
| Nicolet iS50 AUP2010228 NO LNO | FTIR | Oct 05, 2022 |
| Nicolet iS50 AUP2010228 NO2 impurity | FTIR NO2 impurity | Oct 06, 2022 |

**Triad Data Available Upon Request**

**Approved for Release**

**Airgas Specialty Gases**
Airgas USA LLC
525 North Industrial Loop Road
Tooele, UT 84074
Airgas.com

# CERTIFICATE OF ANALYSIS

## Grade of Product: EPA PROTOCOL STANDARD

| | | | |
|---|---|---|---|
| Part Number: | E04NI94E15A0092 | Reference Number: | 153-402117046-1 |
| Cylinder Number: | CC428172 | Cylinder Volume: | 146.9 CF |
| Laboratory: | 124 - Tooele (SAP) - UT | Cylinder Pressure: | 2015 PSIG |
| PGVP Number: | B72021 | Valve Outlet: | 660 |
| Gas Code: | CO,CO2,NO,NOX,BALN | Certification Date: | Jun 01, 2021 |

**Expiration Date: Jun 01, 2029**

Certification performed in accordance with "EPA Traceability Protocol for Assay and Certification of Gaseous Calibration Standards (May 2012)" document EPA 600/R-12/531, using the assay procedures listed. Analytical Methodology does not require correction for analytical interference. This cylinder has a total analytical uncertainty as stated below with a confidence level of 95%. There are no significant impurities which affect the use of this calibration mixture. All concentrations are on a mole/mole basis unless otherwise noted. The results relate only to the items tested. The report shall not be reproduced except in full without approval of the laboratory. Do Not Use This Cylinder below 100 psig, i.e. 0.7 megapascals.

### ANALYTICAL RESULTS

| Component | Requested Concentration | Actual Concentration | Protocol Method | Total Relative Uncertainty | Assay Dates |
|---|---|---|---|---|---|
| NOX | 275.0 PPM | 279.5 PPM | G1 | +/- 0.6% NIST Traceable | 05/25/2021, 06/01/2021 |
| CARBON MONOXIDE | 250.0 PPM | 247.3 PPM | G1 | +/- 0.2% NIST Traceable | 05/25/2021 |
| NITRIC OXIDE | 275.0 PPM | 279.0 PPM | G1 | +/- 0.6% NIST Traceable | 05/25/2021, 06/01/2021 |
| CARBON DIOXIDE | 5.000 % | 4.953 % | G1 | +/- 1.0% NIST Traceable | 05/25/2021 |
| NITROGEN | Balance | | | | |

### CALIBRATION STANDARDS

| Type | Lot ID | Cylinder No | Concentration | Uncertainty | Expiration Date |
|---|---|---|---|---|---|
| NTRM | 13010228 | KAL003899 | 246.9 PPM CARBON MONOXIDE/NITROGEN | 0.2% | Oct 16, 2024 |
| PRM | 12386 | D685025 | 9.91 PPM NITROGEN DIOXIDE/AIR | 2.0% | Feb 20, 2020 |
| NTRM | 13010328 | KAL004356 | 243.4 PPM NITRIC OXIDE/NITROGEN | 0.5% | May 04, 2026 |
| GMIS | 401648675102 | CC500959 | 5.074 PPM NITROGEN DIOXIDE/NITROGEN | 2.1% | Feb 01, 2023 |
| NTRM | 06010609 | K017874 | 7.016 % CARBON DIOXIDE/NITROGEN | 0.5% | Jan 13, 2022 |

The SRM, NTRM, PRM, or RGM noted above is only in reference to the GMIS used in the assay and not part of the analysis.

### ANALYTICAL EQUIPMENT

| Instrument/Make/Model | Analytical Principle | Last Multipoint Calibration |
|---|---|---|
| Nicolet 6700 AMP0900119 CO2 HCO2 | FTIR | May 19, 2021 |
| Horiba VIA-510 46E0F8YY LCO | CO NDIR (Dixon) | May 13, 2021 |
| Nicolet 6700 AMP0900119 NO MNO | FTIR | May 05, 2021 |
| Nicolet 6700 AMP0900119 NO2 impurity | FTIR NO2 impurity | May 05, 2021 |

**Triad Data Available Upon Request**

**Signature on file**

**Approved for Release**

Airgas
an Air Liquide company

**Airgas Specialty Gases**
Airgas USA, LLC
525 North Industrial Loop Road
Tooele, UT 84074
Airgas.com

# CERTIFICATE OF ANALYSIS

## Grade of Product: EPA Protocol

| | | | |
|---|---|---|---|
| Part Number: | E02AI99E15A00J9 | Reference Number: | 153-401187527-1 |
| Cylinder Number: | ALM-001117 | Cylinder Volume: | 146.2 CF |
| Laboratory: | 124 - Tooele (SAP) - UT | Cylinder Pressure: | 2015 PSIG |
| PGVP Number: | B72018 | Valve Outlet: | 590 |
| Gas Code: | PPN,BALA | Certification Date: | May 01, 2018 |

**Expiration Date: May 01, 2026**

Certification performed in accordance with "EPA Traceability Protocol for Assay and Certification of Gaseous Calibration Standards (May 2012)" document EPA 600/R-12/531, using the assay procedures listed. Analytical Methodology does not require correction for analytical interference. This cylinder has a total analytical uncertainty as stated below with a confidence level of 95%. There are no significant impurities which affect the use of this calibration mixture. All concentrations are on a volume/volume basis unless otherwise noted.

Do Not Use This Cylinder below 100 psig, i.e. 0.7 megapascals.

### ANALYTICAL RESULTS

| Component | Requested Concentration | Actual Concentration | Protocol Method | Total Relative Uncertainty | Assay Dates |
|---|---|---|---|---|---|
| PROPANE | 295.0 PPM | 297.1 PPM | G1 | +/- 0.8% NIST Traceable | 05/01/2018 |
| AIR | Balance | | | | |

### CALIBRATION STANDARDS

| Type | Lot ID | Cylinder No | Concentration | Uncertainty | Expiration Date |
|---|---|---|---|---|---|
| NTRM | 08061107 | CC262131 | 249.1 PPM PROPANE/NITROGEN | 0.6% | Jun 22, 2018 |

### ANALYTICAL EQUIPMENT

| Instrument/Make/Model | Analytical Principle | Last Multipoint Calibration |
|---|---|---|
| Nicolet 6700 AMP0900119 C3H8 MC3H8 | FTIR | Apr 17, 2018 |

**Triad Data Available Upon Request**

**Approved for Release**

Airgas
an Air Liquide company

**Airgas Specialty Gases**
Airgas USA LLC
525 North Industrial Loop Road
Tooele, UT 84074
Airgas.com

# CERTIFICATE OF ANALYSIS

## Grade of Product: EPA PROTOCOL STANDARD

| | | | |
|---|---|---|---|
| Part Number: | E02AI99E15A0332 | Reference Number: | 153-402587912-1 |
| Cylinder Number: | AAL19987 | Cylinder Volume: | 146.0 CF |
| Laboratory: | 124 - Tooele (SAP) - UT | Cylinder Pressure: | 2015 PSIG |
| PGVP Number: | B72022 | Valve Outlet: | 590 |
| Gas Code: | PPN,BALA | Certification Date: | Nov 07, 2022 |

**Expiration Date: Nov 07, 2030**

Certification performed in accordance with "EPA Traceability Protocol for Assay and Certification of Gaseous Calibration Standards (May 2012)" document EPA 600/R-12/531, using the assay procedures listed. Analytical Methodology does not require correction for analytical interference. This cylinder has a total analytical uncertainty as stated below with a confidence level of 95%. There are no significant impurities which affect the use of this calibration mixture. All concentrations are on a mole/mole basis unless otherwise noted. The results relate only to the items tested. The report shall not be reproduced except in full without approval of the laboratory. Do Not Use This Cylinder below 100 psig, i.e. 0.7 megapascals.

### ANALYTICAL RESULTS

| Component | Requested Concentration | Actual Concentration | Protocol Method | Total Relative Uncertainty | Assay Dates |
|---|---|---|---|---|---|
| PROPANE | 500.0 PPM | 495.7 PPM | G1 | +/- 0.8% NIST Traceable | 11/07/2022 |
| AIR | Balance | | | | |

### CALIBRATION STANDARDS

| Type | Lot ID | Cylinder No | Concentration | Uncertainty | Expiration Date |
|---|---|---|---|---|---|
| NTRM | 12010923 | ND46382 | 487 PPM PROPANE/AIR | 0.6% | Apr 24, 2024 |

### ANALYTICAL EQUIPMENT

| Instrument/Make/Model | Analytical Principle | Last Multipoint Calibration |
|---|---|---|
| Nicolet iS50 AUP2110269 C3H8 MC3H8 | FTIR | Oct 27, 2022 |

**Triad Data Available Upon Request**

Approved for Release

**Airgas Specialty Gases**
Airgas USA LLC
525 North Industrial Loop Road
Tooele, UT 84074
Airgas.com

# CERTIFICATE OF ANALYSIS

## Grade of Product: EPA PROTOCOL STANDARD

| | | | |
|---|---|---|---|
| Part Number: | E02AI99E15A0333 | Reference Number: | 153-400995644-1 |
| Cylinder Number: | CC347486 | Cylinder Volume: | 146.3 CF |
| Laboratory: | 124 - Tooele (SAP) - UT | Cylinder Pressure: | 2015 PSIG |
| PGVP Number: | B72017 | Valve Outlet: | 590 |
| Gas Code: | PPN,BALA | Certification Date: | Sep 18, 2017 |

**Expiration Date: Sep 18, 2025**

Certification performed in accordance with "EPA Traceability Protocol for Assay and Certification of Gaseous Calibration Standards (May 2012)" document EPA 600/R-12/531, using the assay procedures listed. Analytical Methodology does not require correction for analytical interference. This cylinder has a total analytical uncertainty as stated below with a confidence level of 95%. There are no significant impurities which affect the use of this calibration mixture. All concentrations are on a mole/mole basis unless otherwise noted. The results relate only to the items tested. The report shall not be reproduced except in full without approval of the laboratory. Do Not Use This Cylinder below 100 psig, i.e. 0.7 megapascals.

### ANALYTICAL RESULTS

| Component | Requested Concentration | Actual Concentration | Protocol Method | Total Relative Uncertainty | Assay Dates |
|---|---|---|---|---|---|
| PROPANE | 850.0 PPM | 874.8 PPM | G1 | +/- 0.8% NIST Traceable | 09/18/2017 |
| AIR | Balance | | | | |

### CALIBRATION STANDARDS

| Type | Lot ID | Cylinder No | Concentration | Uncertainty | Expiration Date |
|---|---|---|---|---|---|
| NTRM/C3H8 | 11060918 | CC343418 | 1000.3 PPM PROPANE/NITROGEN | +/- 0.7 | Mar 04, 2021 |

### ANALYTICAL EQUIPMENT

| Instrument/Make/Model | Analytical Principle | Last Multipoint Calibration |
|---|---|---|
| Nicolet 6700 AMP0900119 C3H8 MC3H8 | FTIR | Sep 13, 2017 |

**Triad Data Available Upon Request**

**Signature on file**
**Approved for Release**

| MAQDAQ 1.0 | | | |
|---|---|---|---|
| Project Name: ODEQ ACI - Compliance Testing | Project Number: PROJ-021372 | CEMS Operator: SW | Unit/Condition: ACI |
| Run Length: 90 | Record Interval: 6 | Average Interval: 60 | Triplicate Sampling: True |
| Traverse: True | Ports: 1 | Points per port: 3 | DAQ Device: DT9806(01) |

| NOx Converter Check | | |
|---|---|---|
| **Time** | **NOx reading, ppm** | **Efficiency, %** |
| 16:46:30 | 43.900 | 91.1% |
| 16:46:31 | 44.340 | 92.0% |
| 16:46:32 | 44.580 | 92.5% |
| 16:46:33 | 44.750 | 92.9% |
| 16:46:34 | 45.020 | 93.5% |
| 16:46:35 | 45.080 | 93.6% |
| 16:46:36 | 44.840 | 93.1% |
| 16:46:37 | 44.860 | 93.1% |
| 16:46:38 | 44.810 | 93.0% |
| 16:46:39 | 44.750 | 92.9% |
| 16:46:40 | 44.750 | 92.9% |
| 16:46:41 | 44.660 | 92.7% |
| 16:46:42 | 44.590 | 92.6% |
| 16:46:43 | 44.660 | 92.7% |
| 16:46:44 | 44.680 | 92.8% |
| 16:46:45 | 44.700 | 92.8% |
| 16:46:46 | 44.650 | 92.7% |
| 16:46:47 | 44.680 | 92.8% |
| 16:46:48 | 44.640 | 92.7% |
| 16:46:49 | 44.650 | 92.7% |
| 16:46:50 | 44.640 | 92.7% |
| 16:46:51 | 44.760 | 92.9% |
| 16:46:52 | 44.630 | 92.7% |
| 16:46:53 | 44.700 | 92.8% |
| 16:46:54 | 44.660 | 92.7% |
| 16:46:55 | 44.650 | 92.7% |
| 16:46:56 | 44.580 | 92.5% |
| 16:46:57 | 44.660 | 92.7% |

| Summary | |
|---|---|
| **Analyzer:** | NOx SN-695 |
| **NO2 Cylinder Concentration:** | 48.17 |
| **NO2 Cylinder Number:** | CC513106 |
| **NOx Analyzer Reading:** | 44.660 |
| **Efficiency:** | 92.7% |

Airgas
an Air Liquide company

Airgas Specialty Gases
Airgas USA, LLC
630 United Drive
Durham, NC 27713
Airgas.com

# CERTIFICATE OF ANALYSIS

## Grade of Product: EPA Protocol

| | | | |
|---|---|---|---|
| Part Number: | E02AI99E15WC025 | Reference Number: | 122-402172633-1 |
| Cylinder Number: | CC513106 | Cylinder Volume: | 146.2 CF |
| Laboratory: | 124 - Durham (SAP) - NC | Cylinder Pressure: | 2015 PSIG |
| PGVP Number: | B22021 | Valve Outlet: | 660 |
| Gas Code: | NO2,BALA | Certification Date: | Aug 02, 2021 |

**Expiration Date: Aug 02, 2024**

Certification performed in accordance with "EPA Traceability Protocol for Assay and Certification of Gaseous Calibration Standards (May 2012)" document EPA 600/R-12/531, using the assay procedures listed. Analytical Methodology does not require correction for analytical interference. This cylinder has a total analytical uncertainty as stated below with a confidence level of 95%. There are no significant impurities which affect the use of this calibration mixture. All concentrations are on a mole/mole basis unless otherwise noted.

Do Not Use This Cylinder below 100 psig, i.e. 0.7 megapascals.

### ANALYTICAL RESULTS

| Component | Requested Concentration | Actual Concentration | Protocol Method | Total Relative Uncertainty | Assay Dates |
|---|---|---|---|---|---|
| NITROGEN DIOXIDE | 50.00 PPM | 48.17 PPM | G1 | +/- 2.1% NIST Traceable | 07/26/2021, 08/02/2021 |
| AIR | Balance | | | | |

### CALIBRATION STANDARDS

| Type | Lot ID | Cylinder No | Concentration | Uncertainty | Expiration Date |
|---|---|---|---|---|---|
| GMIS | 401682994 | CC515812 | 29.95 PPM NITROGEN DIOXIDE/NITROGEN | +/- 2.0% | Feb 19, 2023 |
| PRM | 12387 | D685046 | 29.8 PPM NITROGEN DIOXIDE/AIR | +/- 2.0% | Feb 20, 2020 |

The SRM, PRM or RGM noted above is only in reference to the GMIS used in the assay and not part of the analysis.

### ANALYTICAL EQUIPMENT

| Instrument/Make/Model | Analytical Principle | Last Multipoint Calibration |
|---|---|---|
| MKS FTIR NO2 018176583 | FTIR | Jul 21, 2021 |

**Triad Data Available Upon Request**

**PERMANENT NOTES:** BLEND 12 FOR MONTROSE

Approved for Release

Airgas
an Air Liquide company

**Airgas Specialty Gases**
Airgas USA, LLC
11711 S. Alameda Street
Los Angeles, CA 90059
Airgas.com

# CERTIFICATE OF ANALYSIS

## Grade of Product: EPA Protocol

| | | | |
|---|---|---|---|
| Part Number: | E02AI99E15A0442 | Reference Number: | 48-401159268-1 |
| Cylinder Number: | EB0070973 | Cylinder Volume: | 146.0 CF |
| Laboratory: | 124 - Los Angeles (SAP) - CA | Cylinder Pressure: | 2015 PSIG |
| PGVP Number: | B32018 | Valve Outlet: | 590 |
| Gas Code: | CH4,BALA | Certification Date: | Mar 26, 2018 |

**Expiration Date: Mar 26, 2026**

Certification performed in accordance with "EPA Traceability Protocol for Assay and Certification of Gaseous Calibration Standards (May 2012)" document EPA 600/R-12/531, using the assay procedures listed. Analytical Methodology does not require correction for analytical interference. This cylinder has a total analytical uncertainty as stated below with a confidence level of 95%. There are no significant impurities which affect the use of this calibration mixture. All concentrations are on a volume/volume basis unless otherwise noted.

Do Not Use This Cylinder below 100 psig, i.e. 0.7 megapascals.

### ANALYTICAL RESULTS

| Component | Requested Concentration | Actual Concentration | Protocol Method | Total Relative Uncertainty | Assay Dates |
|---|---|---|---|---|---|
| METHANE | 300.0 PPM | 304.4 PPM | G1 | +/- 1.0% NIST Traceable | 03/26/2018 |
| AIR | Balance | | | | |

### CALIBRATION STANDARDS

| Type | Lot ID | Cylinder No | Concentration | Uncertainty | Expiration Date |
|---|---|---|---|---|---|
| NTRM | 10060918 | CC321247 | 500.5 PPM METHANE/NITROGEN | +/- 0.5% | Jun 21, 2022 |

### ANALYTICAL EQUIPMENT

| Instrument/Make/Model | Analytical Principle | Last Multipoint Calibration |
|---|---|---|
| Nicolet 6700 AHR0801551 CH4 | FTIR | Mar 14, 2018 |

**Triad Data Available Upon Request**

**Approved for Release**

5/23 Methane response check
Methane cylinder value = 304.4 ppm

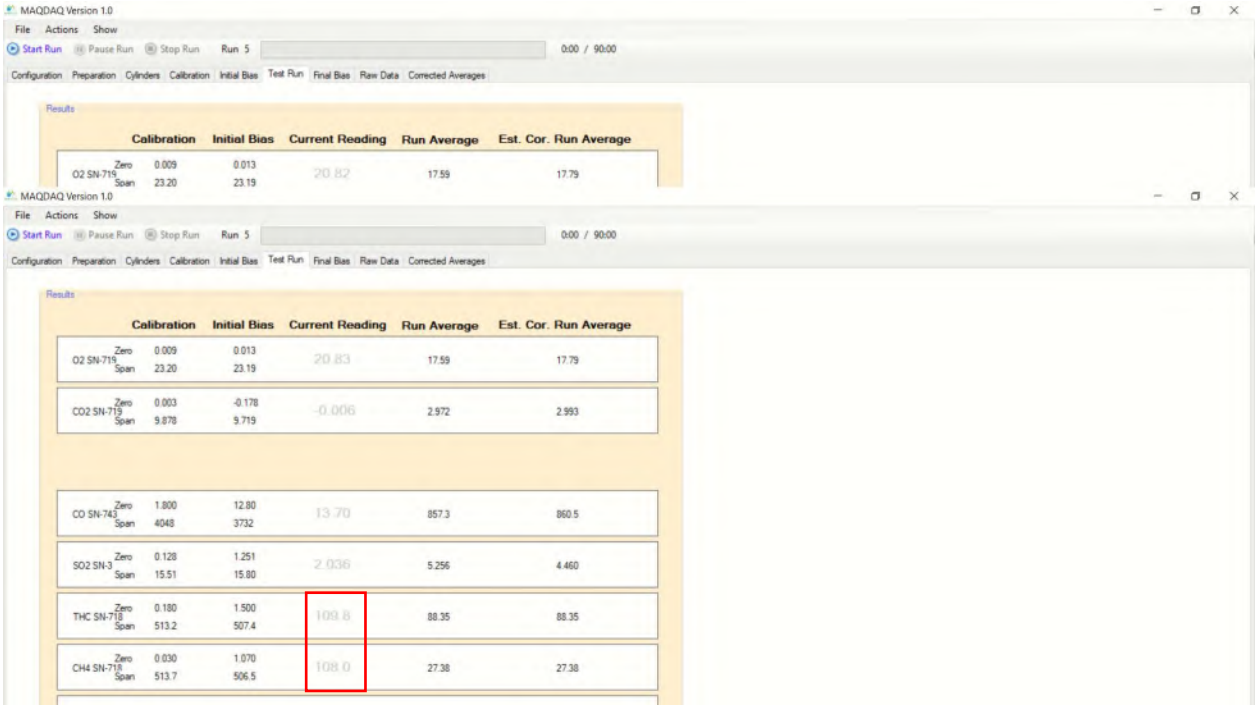


5/24 Methane response check

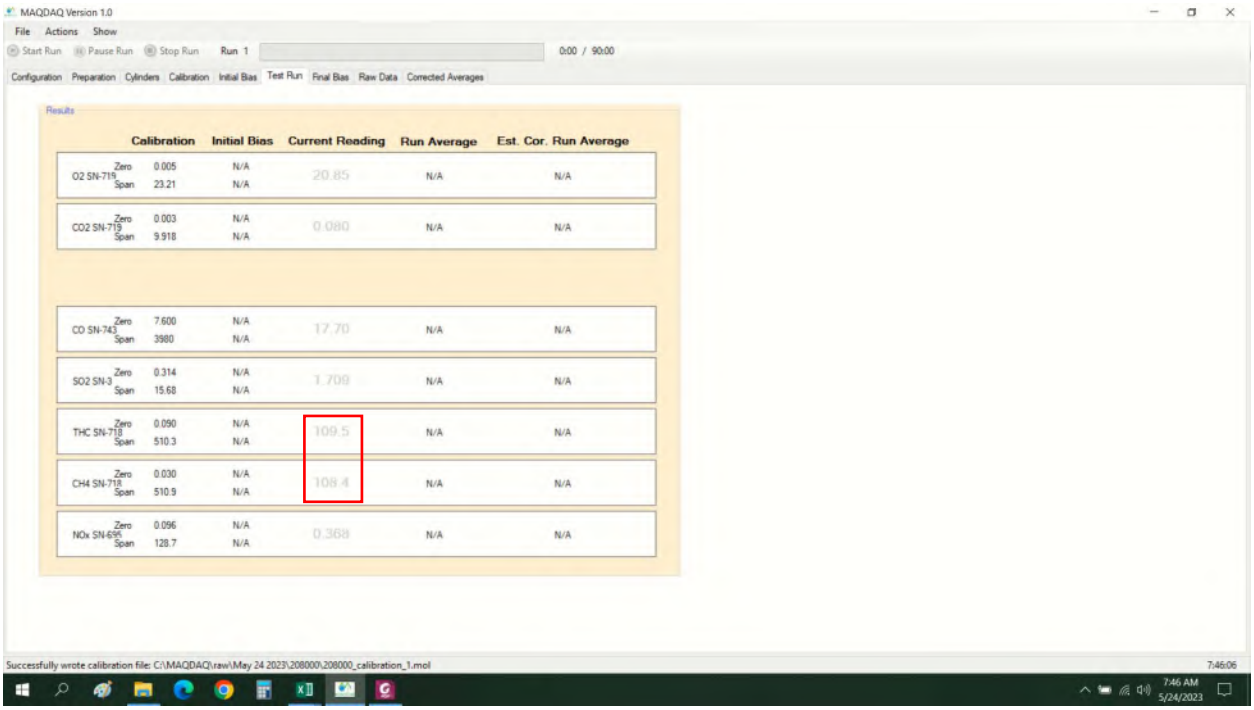

Methane cylinder value = 304.4 ppm

5/25 Methane response check

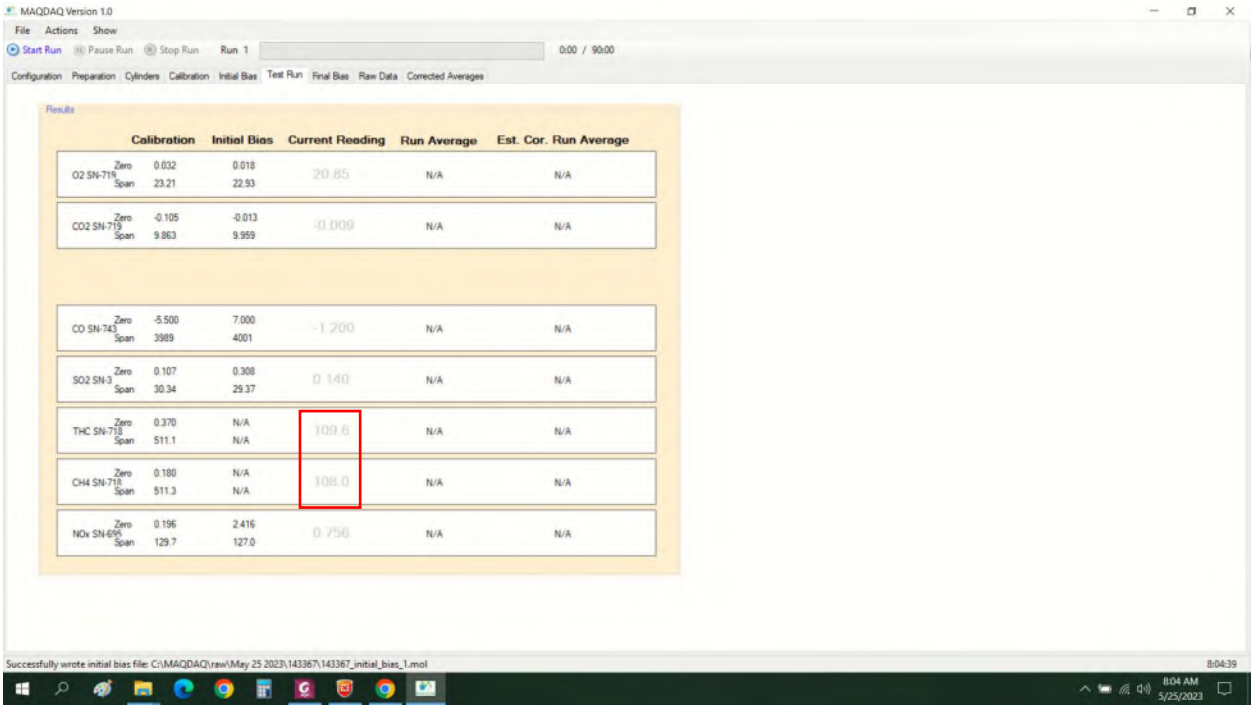

# INTERFERENCE CHECK TEST



**Form Name:** Interference Check
**Document Number:** 001AS-OPS-FM-X
**Revision Number:** 0
**Implementation Date:** June XX, 2018
**Form Owner (Department):** AQS - Operations
**Form Approval:** Miller Gibbs

| | |
|---|---|
| Performed By (Signature): | Peter Becker |
| Date: | 2/10/2023 |
| Analyzer ID: | CAI-719 |
| Analyzer Manufacturer: | CAI |
| Pollutant: | O2 / CO2 |

| | |
|---|---|
| Analyzer Span: | 21.12% O2 / 11.42% CO2 |
| Analyzer Model Number: | 700 Series LX NDIR O2/CO2 |
| Analyzer Serial Number: | 2204031 |
| Anayzer Sample Type (Wet/Dry): | Dry |

| Interferent | Concentration (Wet Analyzer) | Concentration (Dry Analyzer) | Analyzer O2 Response to Interferent Gas ( %v) | Analyzer CO2 Response to Interferent Gas (%v) | Cylinder Serial # |
|---|---|---|---|---|---|
| CO2 | . | 11.42 %v | 0.04 | NA | CC359114 |
| O2 | . | 21.12 %v | NA | 0 | CC415453 |
| H2S in Air | . | 10.06 ppmv | NA | 0 | CC500197 |
| NOx | . | 163.2 ppmv | 0.03 | 0 | CC260978 |
| NO2 in Air | . | ppmv | NA | 0 | CC501046 |
| SO2 | . | 50.97 ppmv | -0.02 | 0 | ALM047587 |
| CO | . | 110.1 ppmv | 0 | -0.1 | CC260978 |
| 40% H2 / 60% He | . | 40% / 60% | 0.28 | 0 | CC153662 |
| C3H8 in Air | . | 49.61 ppmv | NA | -0.11 | CC483639 |
| N2 | . | 100% | 0 | 0 | CC359114 |
| CH4 in Air | . | 85.01 ppmv | NA | 0.01 | EB0066311 |
| | | Sum of Responses | 0.37 | 0.22 | |
| | | Sum of Responses (% of span) | 1.75 | 1.92 | |

| | |
|---|---|
| Note: Ammonia scrubbers used for sources with potential ammonia emissions. Ammonia test not performed. | |
| Note: Only one analyzer per model number needs tested for interference. | |
| Note: Only the higher of the two test for each interferent is displayed (I.e. worst case - with or without pollutant gas of interest in the gas stream) | |
| Note: For analyzers measuring >20ppmv, use 80-100 ppmv. For analyzers measuring <20ppmv Nox, use a concentration representative for the span (i.e. 10 ppmv for span of 20 ppmv). | |
| Acceptance Criteria: | Sum of responses <=2.5% of calibration span |
| Alternative Acceptance Criteria: | <=0.5ppmv for spans 5-10ppmv |
| Alternative Acceptance Criteria: | <=0.2ppmv for spans <5ppmv |

**Montrose Air Quality Services**
1 Park Plaza, Suite 1000, Irvine, CA 92614
T: (949) 988-3500 • F: (949) 988-3514
www.montrose-env.com

MONTROSE
AIR QUALITY SERVICES

**INTERFERENCE RESPONSE TEST**

Date of Test: 7/30/21 Name: Colin Rodkey
Analyzer: Type / Model: CO Thermo iQ Series 48
Serial Number: 1202729319

Method Referenced: EPA Method 7E

CO Results:

| Test Gas | Concentration, ppmv or % | Analyzer Output Response ppmv | Interference % of Span (55.11 ppmv) |
|---|---|---|---|
| $SO_2$ | 27.50 | -0.008 | .015 |
| $O_2$ | 21.22 | -0.112 | .080 |
| $CO_2$ | 11.42 | -0.519 | .942 |
| NO | 100.7 | -0.009 | .016 |
| NO2 | 50.79 | 0.082 | .149 |
| CH4 | 85.01 | 0.006 | .011 |

A Calibration Cylinder containing 55.11 ppmv Carbon Monoxide was used to Span Analyzer

Results:

| Test Gas | Sum of Absolute Differences | Sum of Individual Gases Percent Interferences | Max Allowable Percent of Span Interference (%) |
|---|---|---|---|
| CO | 0.736 | 1.213 | 2.5 |

MONTROSE
AIR QUALITY SERVICES

**INTERFERENCE RESPONSE TEST**

Date of Test: 3/07/2002 Name: Tim Hertel
Analyzer: Type / Model: $SO_2$ / Western Research 721M Serial Number: 000003

Results:

| Test Gas | Concentration, ppmv or % | Analyzer Output Response, % | % of Span (180 ppmv) |
|---|---|---|---|
| $O_2$ | 20.95% | 0.3 | 0.2 |
| *$CO_2$ | 10% | 0.1 | 0.1 |
| **CO | 512 ppmv | 0.8 | 0.4 |

*Used bottle of $CO_2$ at 100% concentration and diluted it with 100% N2 to get a concentration of about 10% $CO_2$.

**Used CO cylinder with 5% concentration and diluted it with 100% $N_2$ to get a concentration of about 500 ppmv CO.

Bias Check:

| Test Gas | Concentration, ppmv | Analyzer Output Response, ppmv | Bias Check (%) |
|---|---|---|---|
| $SO_2$ | 170.3 | 170.9 | 0.3 |

Performance Specifications:

| Analyzer | EPA Ref. Method | Allowable Interference (% of analyzer span) | Gas Values To Introduce Into Analyzers (EPA Method 20) |
|---|---|---|---|
| $SO_2$ | 6C | 7% | 200±20 ppm |
| $O_2$ | 6C | 7% | 20.9±1 percent |
| $CO_2$ | 6C | 7% | 10±1 percent |
| CO | 20 | 2% | 500±50 ppm |

# INTERFERENCE CHECK TEST



**Form Name:** Interference Check
**Document Number:** 001AS-OPS-FM-X
**Revision Number:** 0
**Implementation Date:** June XX, 2018
**Form Owner (Department):** AQS - Operations
**Form Approval:**

| | |
|---|---|
| Performed By (Signature): | Peter Becker |
| Date: | 9/16/2022 |
| Analyzer ID: | 718 ~~710~~ |
| Analyzer Manufacturer: | CAI |
| Pollutant: | THC |

| | |
|---|---|
| Analyzer Span: | 100 |
| Analyzer Model Number: | CAI MHFID Series 700LX |
| Analyzer Serial Number: | 2204032 |
| Anayzer Sample Type (Wet/Dry): | Wet |

| Interferent | Concentration (Wet Analyzer) | Concentration (Dry Analyzer) | Analyzer Response to Interferent Gas (ppmv or %v) Solo | Analyzer Response to Interferent Gas (ppmv or %v) Mixed | Cylinder Serial # |
|---|---|---|---|---|---|
| N2 | 100 %v | . | 0 | | 5620WELSP |
| O2 | 4.945 %v | . | | 0 | CC484548 |
| CO2 | 19.53 %v | . | | 0.4 | CC484548 |
| H2O | 2% | . | 0.1 | | Ambient air |
| NOX | 100.7 ppmv | . | 0 | | CA07997 |
| CO | 110.1 ppmv | . | 0.1 | | CC260987 |
| NO2 | 50.71 ppmv | . | 0.1 | | CC504691 |
| SO2 | 90.81 ppmv | . | 0 | | CC165593 |
| H2S | 10.09 | . | 0 | | CC346228 |
| | | Sum of Responses | 0.3 | 0.4 | |
| | | Sum of Responses (% of span) | 0.7 | | |

| | |
|---|---|
| Note: Ammonia scrubbers used for sources with potential ammonia emissions. Ammonia test not performed. | |
| Note: Only one analyzer per model number needs tested for interference. | |
| Note: Only the higher of the two test for each interferent is displayed (I.e. worst case - with or without pollutant gas of interest in the gas stream) | |
| Note: For analyzers measuring >20ppmv, use 80-100 ppmv. For analyzers measuring <20ppmv Nox, use a concentration representative for the span (i.e. 10 ppmv for span of 20 ppmv). | |
| Acceptance Criteria: | Sum of responses <=2.5% of calibration span |
| Alternative Acceptance Criteria: | <=0.5ppmv for spans 5-10ppmv |
| Alternative Acceptance Criteria: | <=0.2ppmv for spans <5ppmv |

**Montrose Air Quality Services**
1 Park Plaza, Suite 1000, Irvine, CA 92614
T: (949) 988-3500 • F: (949) 988-3514
www.montrose-env.com

MONTROSE AIR QUALITY SERVICES

**INTERFERENCE RESPONSE TEST**

Date of Test: 2/7/2018 Name: Sleight Halley
Analyzer: Type / Model: $NO_x$, $O_2$ / CAI 700 Series
Serial Number: 92/ PN # 1712003

Method Referenced: EPA Method 7E

$NO_x$ Results:

| Test Gas | Concentration, ppmv or % | Analyzer Output Response ppmv | Interference % of Span (127.0 ppmv) |
|---|---|---|---|
| $SO_2$ | 50.59 | -0.1 | 0.08 |
| $O_2$ | 21.1 | -0.1 | 0.08 |
| CO | 24.21 | -0.1 | 0.08 |
| $CO_2$ | 19.43 | -0.1 | 0.08 |
| $CH_4$ | 909 | -0.1 | 0.08 |

A Calibration Cylinder containing 127.0 ppm $NO_x$ was used to calibrate the analyzer.

Results:

| Test Gas | Sum of Absolute Differences | Sum of Individual Gases % Interferences | Max Allowable Percent of Span Interference (%) |
|---|---|---|---|
| $NO_x$ | 0.5 | 0.4 | 2.5 |

$O_2$ Results:

| Test Gas | Concentration, ppmv or % | Analyzer Output Response % | Interference % of Span (21.1%) |
|---|---|---|---|
| $SO_2$ | 50.59 | 0.01 | 0.00 |
| $CO_2$ | 19.43 / 5.05 $O_2$ | 4.97 | 0.38 |
| CO. | 24.21 | -0.01 | 0.00 |
| NO | 126.2 | -0.01 | 0.00 |
| $NO_2$ | 50.15 | 0.12 | 0.57 |
| $CH_4$ | 909 / 20.95 $O_2$ | 20.95 | 0.00 |

A Calibration Cylinder containing 21.1% Oxygen was used to Span Analyzer.

Results:

| Test Gas | Sum of Absolute Differences | Sum of Individual Gases % Interferences | Max Allowable Percent of Span Interference (%) |
|---|---|---|---|
| $O_2$ | 0.20 | 0.95 | 2.5 |

# Appendix D.4
# Accreditation Information/Certifications

STACK TESTING ACCREDITATION COUNCIL

American Association for Laboratory Accreditation

# *Accredited Air Emission Testing Body*

A2LA has accredited

## MONTROSE AIR QUALITY SERVICES

In recognition of the successful completion of the joint A2LA and Stack Testing Accreditation Council (STAC) evaluation process, this laboratory is accredited to perform testing activities in compliance with ASTM D7036:2004 - Standard Practice for Competence of Air Emission Testing Bodies.




Presented this 4th day of February 2022.

Vice President, Accreditation Services
For the Accreditation Council
Certificate Number 3925.01
Valid to February 29, 2024

*This accreditation program is not included under the A2LA ILAC Mutual Recognition Arrangement.*

# SOURCE EVALUATION SOCIETY

## Qualified Source Testing Individual

LET IT BE KNOWN THAT

## SEBASTIAN G. WOLFENDALE

HAS SUCCESSFULLY PASSED A COMPREHENSIVE EXAMINATION AND SATISFIED EXPERIENCE REQUIREMENTS IN ACCORDANCE WITH THE GUIDELINES ISSUED BY THE SES QUALIFIED SOURCE TEST INDIVIDUAL REVIEW BOARD FOR

***MANUAL GAS VOLUME MEASUREMENTS AND ISOKINETIC PARTICULATE SAMPLING METHODS***

ISSUED THIS 7TH DAY OF JULY 2022 AND EFFECTIVE UNTIL JULY 6TH, 2027

*Peter R. Westlin, QSTI/QSTO Review Board*

*Peter S. Pakalnis, QSTI/QSTO Review Board*

*Tina Sanderson, QSTI/QSTO Review Board*

*J. Wade Bice, QSTI/QSTO Review Board*

*Karen D. Kajiya-Mills , QSTI/QSTO Review Board*

*Bruce Randall QSTI/QSTO Review Board*

**CERTIFICATE NO. 2013-812**

# SOURCE EVALUATION SOCIETY

## Qualified Source Testing Individual

LET IT BE KNOWN THAT

## SEBASTIAN G. WOLFENDALE

HAS SUCCESSFULLY PASSED A COMPREHENSIVE EXAMINATION AND SATISFIED EXPERIENCE REQUIREMENTS IN ACCORDANCE WITH THE GUIDELINES ISSUED BY THE SES QUALIFIED SOURCE TEST INDIVIDUAL REVIEW BOARD FOR

***MANUAL GASEOUS POLLUTANTS SOURCE SAMPLING METHODS***

ISSUED THIS 21ST DAY OF MARCH 2022 AND EFFECTIVE UNTIL MARCH 20TH, 2027

*Peter R. Westlin, QSTI/QSTO Review Board*

*Peter S. Pakalnis, QSTI/QSTO Review Board*

*Tina Sanderson, QSTI/QSTO Review Board*

*J. Wade Bice, QSTI/QSTO Review Board*

*Karen D. Kajiya-Mills , QSTI/QSTO Review Board*

*Bruce Randall QSTI/QSTO Review Board*

**CERTIFICATE NO. 2013-812**

SOURCE EVALUATION SOCIETY CORPORATE SEAL 1995 NORTH CAROLINA

# SOURCE EVALUATION SOCIETY

## Qualified Source Testing Individual

LET IT BE KNOWN THAT

## SEBASTIAN G. WOLFENDALE

HAS SUCCESSFULLY PASSED A COMPREHENSIVE EXAMINATION AND SATISFIED EXPERIENCE REQUIREMENTS IN ACCORDANCE WITH THE GUIDELINES ISSUED BY THE SES QUALIFIED SOURCE TEST INDIVIDUAL REVIEW BOARD FOR

***GASEOUS POLLUTANTS INSTRUMENTAL SAMPLING METHODS***

ISSUED THIS 23RD DAY OF DECEMBER 2021 AND EFFECTIVE UNTIL DECEMBER 22ND, 2026

*Peter R. Westlin, QSTI/QSTO Review Board*

*Peter S. Pakalnis, QSTI/QSTO Review Board*

*Tina Sanderson, QSTI/QSTO Review Board*

*J. Wade Bice, QSTI/QSTO Review Board*

*Karen D. Kajiya-Mills , QSTI/QSTO Review Board*

*Bruce Randall QSTI/QSTO Review Board*

**CERTIFICATE NO. 2013-812**

SOURCE EVALUATION SOCIETY CORPORATE SEAL 1995 NORTH CAROLINA

# SOURCE EVALUATION SOCIETY

## Qualified Source Testing Individual

LET IT BE KNOWN THAT

## SEBASTIAN G. WOLFENDALE

HAS SUCCESSFULLY PASSED A COMPREHENSIVE EXAMINATION AND SATISFIED EXPERIENCE REQUIREMENTS IN ACCORDANCE WITH THE GUIDELINES ISSUED BY THE SES QUALIFIED SOURCE TEST INDIVIDUAL REVIEW BOARD FOR

***HAZARDOUS METALS MEASUREMENT METHODS***

ISSUED THIS 11TH DAY OF FEBRUARY 2022 AND EFFECTIVE UNTIL FEBRUARY 10TH, 2027

*Peter R. Westlin, QSTI/QSTO Review Board*

*Peter S. Pakalnis, QSTI/QSTO Review Board*

*Tina Sanderson, QSTI/QSTO Review Board*

*J. Wade Bice, QSTI/QSTO Review Board*

*Karen D. Kajiya-Mills , QSTI/QSTO Review Board*

*Bruce Randall QSTI/QSTO Review Board*

**CERTIFICATE NO. 2013-812**

SOURCE EVALUATION SOCIETY CORPORATE SEAL 1995 NORTH CAROLINA

# Certificate of Completion

## Sebastian Wolfendale

**This document certifies that this individual has passed a comprehensive examination and is now a Qualified Individual (QI) as defined in Section 8.3 of ASTM D7036-04 for the following method(s):**

**EPA Methods 3C, TO-8, TO-12 and TO-15**

**Certificate Number:** 006-2023-2

Tate Strickler, VP – Quality Systems

Date of issue: 03/21/2023

Date of expiration: 03/20/2028

MONTROSE ENVIRONMENTAL

# Certificate of Completion

## Sebastian Wolfendale

**This document certifies that this individual has passed a comprehensive examination and is now a Qualified Individual (QI) as defined in Section 8.3 of ASTM D7036-04 for the following method(s):**

**EPA SW846 Methods 0010, 0011, & 0023A**

**Certificate Number:** 006-2022-6

Tate Strickler, VP – Quality Systems

Date of issue: 03/01/2022

Date of expiration: 02/28/2027

MONTROSE ENVIRONMENTAL

# Certificate of Completion

## Sebastian Wolfendale

**This document certifies that this individual has passed a comprehensive examination and is now a Qualified Individual (QI) as defined in Section 8.3 of ASTM D7036-04 for the following method(s):**

**NCASI Methods 94.02, 98.01, 99.02 & 105.01**

**Certificate Number:** 021-2021-35

Tate Strickler, VP – Quality Systems

Date of issue: 11/10/2021

Date of expiration: 11/09/2026

MONTROSE ENVIRONMENTAL

# Certificate of Completion

## Sebastian Wolfendale

**This document certifies that this individual has passed a comprehensive examination and is now a Qualified Individual (QI) as defined in Section 8.3 of ASTM D7036-04 for the following method(s):**

**ODEQ Methods 4, 5, 7 & 8**

**Certificate Number:** 006-2022-9

Tate Strickler, VP – Quality Systems

Date of issue: 03/31/2022

Date of expiration: 03/30/2027

MONTROSE ENVIRONMENTAL

# Certificate of Completion

## Sebastian Wolfendale

**This document certifies that this individual has passed a comprehensive examination and is now a Qualified Individual (QI) as defined in Section 8.3 of ASTM D7036-04 for the following method(s):**

**EPA Method 23**

**Certificate Number:** 006-2022-5

Tate Strickler, VP – Quality Systems

Date of issue: 02/28/2022

Date of expiration: 02/27/2027

MONTROSE ENVIRONMENTAL

# Appendix D.5
# Quality Assurance Program Summary and Equipment Calibration Schedule

# QUALITY ASSURANCE PROGRAM SUMMARY AND CERTIFICATIONS

Montrose Air Quality Services, LLC (Montrose) ensures the quality and validity of its emission measurement and reporting procedures through a rigorous quality assurance (QA) program. The program is developed and administered by internal QA personnel and encompasses seven major areas:

1. Development and use of an internal QA manual
2. QA reviews of reports, laboratory work, and field testing
3. Equipment calibration and maintenance
4. Chain of custody
5. Continuous training
6. Knowledge of current test methods
7. Audit program

Each of these areas is discussed individually below.

**Quality Assurance Manual.** Montrose has prepared a QA Manual according to EPA guidelines and ASTM D-7036. The manual serves to document and formalize all of Montrose's QA efforts. The manual is constantly updated, and each employee involved in technical services for emission measurements is required to read, understand its contents, and sign a statement that all work they perform will conform to its practices. The manual includes details on the other seven QA areas discussed below.

**QA Reviews.** Montrose 's review procedure includes review of each source test report by the QA Manager or equivalent position including data input, calculations and averages, and report text. The laboratory manager or equivalent reviews all laboratory work, and the qualified individual on-site reviews all field work and data sheets.

The most important review is the one that takes place before a test program begins. The QA Manager works with testing personnel to prepare and review test protocols. Test protocol review includes selection of appropriate test procedures, evaluation of any interferences or other restrictions that might preclude use of standard test procedures, and evaluation and/or development of alternate procedures.

**Equipment Calibration and Maintenance.** The equipment used to conduct the emission measurements is maintained according to the manufacturer's instructions to ensure proper operation. In addition to the maintenance program, calibrations are carried out on each measurement device according to the schedule outlined below. The schedules for maintenance and calibrations are given in Tables A-1 and A-2.

Quality control checks are also conducted in the field for each test program. A partial list of checks made as part of each continuous analyzer system test series is included below as an example of the field QA procedures.

- Sample acquisition and conditioning system leak check
- 3-point analyzer calibrations (all analyzers)
- Complete system calibration check ("dynamic calibration" through entire sample system)

- Periodic analyzer calibration checks are conducted at the start and end of each test run. Any change between pre- and post-test readings are recorded.
- All calibrations are conducted using EPA Protocol gases certified by the manufacturer
- Calibration and continuous analyzer performance data are fully documented, and are included in each source test report

**Chain of Custody.** Montrose maintains full chain of custody documentation on all samples and data sheets. In addition to normal documentation of changes between field sample custodians, laboratory personnel, and field test personnel, Montrose documents every individual who handles any test component in the field (e.g., probe wash, impinger loading and recovery, filter loading and recovery, etc.).

Samples are stored in a locked area to which only laboratory personnel have access. Neither other Montrose employees nor cleaning crews have keys to this area.

**Training.** Personnel training is essential to ensure quality testing. Montrose has formal and informal training programs which may include some or all of the following:

1. Attendance at EPA-sponsored training courses
2. A requirement for all technicians to read, understand, and sign Montrose 's QA Manual
3. In-house training and Montrose meetings on a regular basis
4. Maintenance of training records
5. Administration of internal qualified individual (QI) tests for all methods performed
6. Participation in the Qualified Source Testing Individual (QSTI) program administered by the Source Evaluation Society (SES)

**Knowledge of Current Test Methods.** With the constant updating of standard test methods and the wide variety of emerging test methods, it is essential that any qualified source tester keep abreast of new developments. Montrose subscribes to services which provide updates on EPA reference methods, and on EPA and local agency rules and regulations. Additionally, source test personnel regularly attend and present papers at testing and emission-related seminars and conferences.

**Audit Program.** Montrose participates in the TNI Stationary Source Audit Sample (SSAS) audit program for all methods for which audit samples are available.

**TABLE A-1**
**SAMPLING INSTRUMENTS AND**
**EQUIPMENT CALIBRATION SCHEDULE**

| Instrument Type | Frequency of Calibration[1] | Standard of Comparison or Method of Calibration | Acceptance Limits |
|---|---|---|---|
| Orifice Meter(large) | 12 months | Calibrated dry test meter | ± 2% of volume measured |
| Dry Gas Meter | 6 months or when repaired | Calibrated dry test meter | ± 2% of volume measured |
| Critical Orifice | 6 months | Calibrated dry test meter | ± 0.5% of average K’ |
| S-Type Pitot (for use with EPA-type sampling train) | 6 months | EPA Method 2 | Geometric measurements within method-specified ranges |
| Vacuum Gauges | 12 months | NIST-traceable gauge | ≤ 1.0 in Hg difference |
| Temperature Measurement (thermocouples) | 12 months | NBS mercury thermometer or NBS calibrated platinum RTD | ±4 °F for <400 °F<br>± 1.5% for >400 °F |
| Temperature Readout Devices | 6 months | Thermocouple simulator | ± 2% full scale reading |
| Analytical Balance | 12 months (check prior to each use) | NIST-traceable weights | ± 0.5 mg of stated weight |
| Probe Nozzles | 12 months | Nozzle diameter check | Range <± 0.10 mm for micrometer three measurements |
| Continuous Analyzers | Every field day, Depends upon use, frequency and performance | As specified by manufacturers’ operating manuals, EPA NBS gases and/or reference methods | Satisfy all limits specified in operating specifications |

[1] The tabulated calibration frequencies are minimum standards. In certain instances, calibrations are performed more frequently.

**TABLE A-2**
**EQUIPMENT MAINTENANCE SCHEDULE**
**Based on Manufacturer's Specifications and Montrose's Experience**

| Equipment | Performance Requirement | Maintenance Interval[2] | Corrective Action |
|---|---|---|---|
| Pumps | 1. Absence of leaks<br>2. Ability to draw manufacturer required vacuum and flow | 6 months | 1. Visual inspection<br>2. Clean<br>3. Replace worn parts<br>4. Leak check |
| Flow Measuring Device | 1. Free mechanical movement<br>2. Absence of malfunction | 6 months | 1. Visual inspection<br>2. Clean<br>3. Calibrate |
| Sampling Instruments | 1. Absence of malfunction<br>2. Proper response to zero, span gas | As required by the manufacturer | As recommended by manufacturer |
| Mobile Van Sampling Systems | Absence of leaks | Depends on nature of use | 1. Change filters<br>2. Leak check<br>3. Check for system contamination |
| Sampling Lines | Sample degradation less than 2% | After each test or test series | Blow filtered air through line until dry |

[2] The tabulated maintenance intervals are minimum standards. In certain instances, maintenance is performed more frequently.

# Appendix E
# Regulatory Information

# Appendix E.1
# Regulatory Correspondence

# Source Test Plan for 2023 Emission Factor Testing
# Mobile Air Curtain Incinerator
# Oregon DEQ
# Hillsboro, Oregon

**Prepared By:**

**Montrose Air Quality Services, LLC**
**4150 B Place NW Suite 106**
**Auburn, WA 98001**

**For Submission To:**

**Oregon Department of Environmental Quality**
**700 NE Multnomah St, Ste 600**
**Portland, OR 97232-4100**

**Document Number: W021AS-021372-PP-1239**
**Proposed Test Dates: May 2 and 23-25, 2023**
**Submittal Date: April 18, 2023**

# Review and Certification

I certify that, to the best of my knowledge, the information contained in this document is complete and accurate and conforms to the requirements of the Montrose Quality Management System and ASTM D7036-04.

| | | | |
|---|---|---|---|
| **Signature:** |  | **Date:** | 04 / 19 / 2023 |
| **Name:** | Sebastian Wolfendale | **Title:** | Project Manager |

I have reviewed, technically and editorially, details and other appropriate written materials contained herein. I hereby certify that to the best of my knowledge the presented material is authentic and accurate and conforms to the requirements of the Montrose Quality Management System and ASTM D7036-04.

| | | | |
|---|---|---|---|
| **Signature:** | Kristina Schafer | **Date:** | 04 / 19 / 2023 |
| **Name:** | Kristina Schafer | **Title:** | PNW Hub District Manager |

# Table of Contents


| Section | | | Page |
|---|---|---|---|
| 1.0 | Introduction | | 5 |
| | 1.1 | Summary of Test Program | 5 |
| | 1.2 | Key Personnel | 7 |
| 2.0 | Plant and Sampling Location Descriptions | | 9 |
| | 2.1 | Process Description, Operation, and Control Equipment | 9 |
| | 2.2 | Flue Gas Sampling Locations | 9 |
| | 2.3 | Operating Conditions and Process Data | 9 |
| | 2.4 | Plant Safety | 10 |
| | | 2.4.1 Safety Responsibilities | 11 |
| | | 2.4.2 Safety Program and Requirements | 12 |
| 3.0 | Sampling and Analytical Procedures | | 13 |
| | 3.1 | Test Methods | 13 |
| | | 3.1.1 EPA Method 1 | 13 |
| | | 3.1.2 EPA Method 2 | 13 |
| | | 3.1.3 EPA Method 4 | 14 |
| | | 3.1.4 ODEQ Method 5 | 14 |
| | | 3.1.5 EPA Methods 3A, 6C, 7E, and 10 | 15 |
| | | 3.1.6 EPA Method 25A | 17 |
| | | 3.1.7 EPA Method 23 | 18 |
| | | 3.1.8 EPA Method 29 | 19 |
| | | 3.1.9 EPA SW-846 Method 0010 & CARB 429 PAH Suite | 22 |
| | | 3.1.10 EPA Method TO-15 | 25 |
| | | 3.1.11 NCASI Method IM/CAN/WP-99.02 | 27 |
| | | 3.1.12 ASTM D3172 and ASTM D3176 | 29 |
| | | 3.1.13 ASTM D5373, ASTM D3173-03, and ASTM D3302-07ae1, Grind | 29 |
| | 3.2 | Process Test Methods | 30 |
| 4.0 | Quality Assurance and Reporting | | 31 |
| | 4.1 | QA Audits | 31 |
| | 4.2 | Quality Control Procedures | 31 |
| | | 4.2.1 Equipment Inspection and Maintenance | 31 |
| | | 4.2.2 Audit Samples | 31 |
| | 4.3 | Data Analysis and Validation | 31 |
| | 4.4 | Sample Identification and Custody | 32 |
| | 4.5 | Quality Statement | 32 |
| | 4.6 | Reporting | 32 |
| | | 4.6.1 Example Report Format | 33 |

4.6.2 Example Presentation of Test Results ..... 33

## List of Appendices

Appendix A Supporting Information ..... 35
Appendix A.1 Units and Abbreviations ..... 36
Appendix A.2 Accreditation Information/Certifications ..... 40
Appendix A.3 Project Schedule ..... 42
Appendix A.4 Test Location Diagrams ..... 45
Appendix A.5 Valley Environmental Permits and Certifications ..... 52
Appendix "S" Field Work Safety Plan ..... 82

## List of Tables

Table 1-1 Summary of Test Program and Proposed Schedule – ACI Preliminary Test ..... 6
Table 1-2 Summary of Test Program and Proposed Schedule – ACI Source Test ..... 6
Table 1-3 Test Personnel and Responsibilities ..... 8
Table 2-1 Sampling Locations ..... 9
Table 4-1 Example Particulate Emissions Results - Air Curtain Incinerator ..... 34

## List of Figures

Figure 3-1 ODEQ Method 5 Sampling Train ..... 15
Figure 3-2 EPA Methods 3A ($O_2/CO_2$), 6C, 7E, 10 and 25A Sampling Train ..... 17
Figure 3-3 EPA Method 23 Sampling Train ..... 19
Figure 3-4 EPA Method 29 (Hg) (Detached) Sampling Train ..... 22
Figure 3-5 EPA SW-846 Method 0010 Sampling Train ..... 25
Figure 3-6 EPA TO-15 Sampling Train ..... 27
Figure 3-7 NCASI 99.02 Sampling Train ..... 29
Figure 4-1 Typical Report Format ..... 33

# 1.0 Introduction

## 1.1 Summary of Test Program

Oregon DEQ contracted Montrose Air Quality Services, LLC (Montrose) to perform an emissions test program on a single Air Curtain Incinerator that will be located at SW Fern Hill Road in Forest Grove, OR. The tests are conducted to determine emissions of air toxics and criteria pollutants for potential permitting through Cleaner Air Oregon (CAO) from an Air Curtain Incinerator.

The specific objectives are to:

- Perform a preliminary test program to verify that the partial fume hood exhaust duct is operating as intended, and to streamline ACI operation and testing procedures for the test program
- Peform a a full test program to measure emissions of the following compounds from the ACI at the partial fume hood exhaust duct: $O_2$, $CO_2$, $SO_2$, $NO_X$, CO, VOC, NMVOC, $CH_4$, PM, PCDD, PCDF, Multiple Metals (Sb, As, Ba, Be, Cd, Cr, Co, Cu, Pb, Mn, Sb, As, Ba, Be, Cd, Cr, Co, Cu, Pb, Mn, Hg, Ni, P, Se, Ag, Tl, Zn), PAH Suite, Trichloroethene, Vinyl Acetate, Acrolein, Benzene, Formaldehyde
- Conduct the test program with a focus on safety

Montrose will provide the test personnel and the necessary equipment to measure emissions as outlined in this test plan. Facility personnel will provide the process and production data to be included in the final report. A summary of the test program and proposed schedule is presented in Table 1-1 and 1-2.

**Table 1-1**
**Summary of Test Program and Proposed Schedule – ACI Preliminary Test**

| Proposed Test Dates | Activity/Parameters | Test Methods | No. of Runs | Duration (Minutes) | Reporting Units |
|---|---|---|---|---|---|
| 5/2/2023 | Traverse Points | EPA M1 | N/A | N/A | N/A |
| 5/2/2023 | Stack Gas Velocity | EPA M2[1] | N/A | N/A | ft/s |
| 5/2/2023 | $H_2O$ | EPA M4 | 2-3 | 60 | % volume |
| 5/2/2023 | PM | ODEQ M5 | 2-3 | 60 | lb/MMBtu |
| 5/2/2023 | $O_2$, $CO_2$, $SO_2$, $NO_X$, CO, VOC, NMVOC, $CH_4$ | EPA M3A, 6C, 7E, 10, and 25A | 2-3 | 60 | ppm, ppmvd lb/MMBtu |
| 5/2/2023 | Mass emission rate | EPA M19 | N/A | N/A | lb/MMBtu |
| 5/2/2023 | Fuel Sample for Btu/lb & F-Factor | Ultimate & Proximate Analysis | TBD | N/A | Btu/lb |

**Table 1-2 Summary of Test Program and Proposed Schedule – ACI Source Test**

| Proposed Test Dates | Activity/Parameters | Test Methods | No. of Runs | Duration (Minutes) | Reporting Units |
|---|---|---|---|---|---|
| 5/23-25/2023 | Traverse Points | EPA M1 | N/A | N/A | N/A |
| 5/23-25/2023 | Stack Gas Velocity | EPA M2 | N/A | N/A | ft/s |
| 5/23-25/2023 | Mass emission rate | EPA M19 | N/A | N/A | lb/MMBtu |
| 5/23-25/2023 | $H_2O$ | EPA M4 | 6 | 180 | % volume |
| 5/23-25/2023 | PM | ODEQ M5 | 3 | 180 | lb/MMBtu |
| 5/23-25/2023 | $O_2$, $CO_2$, $SO_2$, $NO_X$, CO, VOC, NMVOC, $CH_4$ | EPA M3A, 6C, 7E, 10, and 25A | 3 | 180 | ppm, ppmvd lb/MMBtu |
| 5/23-25/2023 | PCDD, PCDF | EPA M23 | 3 | 180 | pg/m³, ug, lb/MMBtu |
| 5/23-25/2023 | Sb, As, Ba, Be, Cd, Cr, Co, Cu, Pb, Mn, Sb, As, Ba, Be, Cd, Cr, Co, Cu, Pb, Mn, Hg, Ni, P, Se, Ag, Tl, Zn | EPA M29 | 3 | 180 | ug, mg/dscm, lb/MMBtu |
| 5/23-25/2023 | PAH Suite | EPA SW-846 M0010 | 3 | 180 | ug, ug/mL, lb/MMBtu |
| 5/23-25/2023 | Trichloroethene, vinyl acetate | EPA TO-15 | 3 | 180 | ppb, ppbvd lb/MMBtu |
| 5/23-25/2023 | Selected HAPs (Acrolein, benzene, formaldehyde) | NCASI M 99.02 | 3 | 180 | ppb, ppbvd, lb/MMBtu |
| 5/23-25/2023 | Fuel Sample for Btu/lb & F-Factor | Ultimate & Proximate Analysis | TBD | N/A | Btu/lb |
| 5/23-25/2023 | Biochar H, N, C, moisture | ASTM D5373, D3173-03, and | 1/day | N/A | Wt % |

[1] Will be measured to facilitate isokinetic sampling and will be performed with isokinetic test method (ODEQ 5, M23, M29, SW-846 M0010)

| Proposed Test Dates | Activity/Parameters | Test Methods | No. of Runs | Duration (Minutes) | Reporting Units |
|---|---|---|---|---|---|
| | | ASTM D3302-07ae1, Grind | | | |

To simplify this test plan, a list of Units and Abbreviations is included in Appendix A. Throughout this test plan, chemical nomenclature, acronyms, and reporting units are not defined. Please refer to the list for specific details.

## 1.2 Key Personnel

A list of project participants is included below:

**Agency Information**

| | | |
|---|---|---|
| Project Contact: | Margaret Miller | Thomas Rhodes |
| Role: | Air Quality Planner | Source Test Coordinator |
| Company: | ODEQ | ODEQ |
| Telephone: | (503) 347-5028 | (503) 229-5534 |
| Email: | margaret.miller@deq.oregon.gov | Thomas.Rhodes@deq.oregon.gov |

**Air Curtain Incinerator Operator Information**

| | |
|---|---|
| Contractor: | Valley Environmental, LLC |
| Agency Contact: | Ryan Ramage |
| Telephone: | (503) 799-9728 |
| Email: | RRamage@valleyenvironmental.net |

**Test Location Information**

| | |
|---|---|
| Source Location: | Fern Hill Property<br>1399 SW Fern Hill Road<br>Forest Grove, OR 97116 |
| Project Contact: | Randy Lawrence |
| Role: | Water Resources Project Manager |
| Company: | Clean Water Services |
| Telephone: | 503-681-3683 |
| Email: | lawrencer@cleanwaterservices.org |

**Testing Company Information**

| | | |
|---|---|---|
| Testing Firm: | Montrose Air Quality Services, LLC | |
| Contact: | Kristina Schafer | Sebastian Wolfendale |
| Title: | PNW District Manager | Client Project Manager |
| Telephone: | (253) 480-3801 | (425) 802-0794 |
| Email: | kschafer@montrose-env.com | sewolfendale@montrose-env.com |

**Laboratory Information**

Laboratory: Chester LabNet
City, State: Tigard, OR
Lab Registration #: OR100051
Method: EPA M29, ODEQ5

Laboratory: Enthalpy
City, State: Durham and Wilmington, North Carolina; Orange, CA
Method: EPA M23, TO-15, SW-846 M0010

Laboratory: AAC
City, State: Ventura, California
Method: TO-15, NCASI 99.02

Laboratory: Hazen Research, Inc.
City, State: Golden, CO
Method: ASTM D3172, ASTM D3176 Ultimate and proximate analysis

Laboratory: ALS Environmental
City, State: Tucson, AZ
Method: ASTM D5373, ASTM D3173-03, and ASTM D3302-07ae1, Grind

Table 1-3 details the roles and responsibilities of the test team.

**Table 1-3**
**Test Personnel and Responsibilities**

| Role | Primary Assignment | Additional Responsibilities |
|---|---|---|
| Client Project Manager | Coordinate Project | Post-test follow up |
| Lab Technician | Sample recoveries and sample tracking | Preparation, support PM |
| Technicians | Execute stack platform responsibilities | Preparation, support PM |

# 2.0 Plant and Sampling Location Descriptions

## 2.1 Process Description, Operation, and Control Equipment

The BurnBoss T24 is a two-cylinder liquid cooled diesel engine, 12.5 HP (Kubota Z482-E3 or equivalent), full enclosure; security locks around power source; Emissions certified U.S. EPA Tier4. The patented BurnBoss was originally designed to support the U.S. Forest Service and its effort to prevent wildfires. Today, this equipment is used in many applications, including construction and agriculture. The BurnBoss is a self-contained, completely assembled above-ground Air Curtain Burner with a refractory lined burn-container. A small onboard diesel engine powers the air curtain fan.

## 2.2 Flue Gas Sampling Locations

Actual stack measurements, number of traverse points, and location of traverse points will be evaluated in the field as part of the test program. Table 2-1 presents the anticipated stack measurements and traverse points for the sampling locations listed.

**Table 2-1**
**Sampling Locations**

| Sampling Location | Stack Inside Diameter (in.) | Distance from Nearest Disturbance | | Number of Traverse Points |
|---|---|---|---|---|
| | | Downstream EPA "B" (in./dia.) | Upstream EPA "A" (in./dia.) | |
| A1 Port (3" ID) | 12.25 | 96.25/7.86 | 96/7.84 | 1 – Single point traverse, as discussed with ODEQ in planning |
| A2 Port (3" ID) | 12.25 | 96/7.84 | 96/7.84 | " " |
| A3 Port (3" ID) | 12.25 | 96/7.84 | 96/7.84 | " " |
| B1 Port (2" ID) | 12.25 | 96/7.84 | 96/7.84 | " " |
| B2 Port (2" ID) | 12.25 | 96/7.84 | 48/3.92 | " " |

Sample locations are verified in the field to conform to EPA Method 1. Acceptable cyclonic flow conditions are confirmed prior to testing using EPA Method 1, Section 11.4. Appendix A presents stack schematics and process flow diagrams.

Diagrams of the partial fume hood exhaust duct system are included in Appendix A.4.

## 2.3 Operating Conditions and Process Data

Emission tests are performed while the source is operating normally and as required by the Valley operating permit.

Plant personnel are responsible for establishing the test conditions and collecting all applicable unit-operating data. Data collected includes the following parameters:

- Record ACI loading times – obtained by Valley
- Height of partial fume hood (relative to ACI) – fume hood operator
- Weight of biomass fuel – obtained by Valley
- Heat content and F-Factor of biomass fuel – obtained by Montrose

Fuel Weighing Procedure: Wood fuel will be loaded into one of two or three drop boxes on site and will be weighed in the drop box prior to loading in the ACI. Prior to loading a tare weight for each drop box will be obtained. Each drop box provides approximately one hour of fuel for the ACI. Valley Environmental will be providing the drop boxes and will be responsible for the loading, weighing, and reloading of the drop boxes. Only fuel that is loaded into the ACI as part of the test burn will be weighed.

The scale will be at the Waste Management facility located on site at 1525 B Street, Forest Grove, OR 97116. The scale has a weight resolution 20 lbs. Drivers will come to a complete stop before driving on to the scale, then proceed forward slowly on the scale and make a smooth, easy stop. This will prevent any sudden shifts in the scale that may interfere with the load sensors.

Fuel Sampling Procedure: One representative sample will be collected per test day. At the end of each test run all samples will be aggregated and mixed to generate a single composite sample per test run. A backup sample will be archived if needed for additional analysis. Only fuel that is loaded into the ACI as part of the test burn will be included in the composite sample. ODEQ will determine what constitutes a representative sample and select specific pieces of wood to be included in the sample. Valley Environmental will buck the wood into pieces that can be fed to a wood chipper. Montrose will supply a wood chipper, take custody of the fuel sample, and submit it to the analysis lab.

## 2.4 Plant Safety

Montrose will comply with all safety requirements at the facility. The facility Client Sponsor, or designated point of contact, is responsible for ensuring routine compliance with plant entry, health, and safety requirements. The Client Sponsor has the authority to impose or waive facility restrictions. The Montrose test team leader has the authority to negotiate any deviations from the facility restrictions with the Client Sponsor. Any deviations must be documented.

### 2.4.1 Safety Responsibilities

#### Planning

- Montrose must complete a field review with the Client Sponsor prior to the project date. The purpose of the review is to develop a scope of work that identifies the conditions, equipment, methods, and physical locations that will be utilized along with any policies or procedures that will affect our work
- We must reach an agreement on the proper use of client emergency services and ensure that proper response personnel are available, as needed
- The potential for chemical exposure and actions to be taken in case of exposure must be communicated to Montrose. This information must include expected concentrations of the chemicals and the equipment used to identify the substances.
- Montrose will provide a list of equipment being brought to the site, if required by the client

#### Project Day

- Montrose personnel will arrive with the appropriate training and credentials for the activities they will be performing and the equipment that they will operate
- Our team will meet daily to review the Project Scope, Job Hazard Assessment, and Work Permits. The Client Sponsor and Operations Team are invited to participate.
- Montrose will provide equipment that can interface with the client utilities previously identified in the planning phase and only work with equipment that our client has made ready and prepared for connection
- We will follow client direction regarding driving safety, safe work permitting, staging of equipment, and other crafts or work in the area
- As per 40 CFR Part 60 Subpart A, Section 60.8, the facility must provide the following provisions at each sample location:
    - Sampling ports, which meet EPA minimum requirements for testing. The caps should be removed or be hand-tight.
    - Safe sampling platforms
    - Safe access to the platforms and test ports, including any scaffolding or man lifts
    - Sufficient utilities to perform all necessary testing
- Montrose will use the client communication system, as directed, in case of plant or project emergency
- Any adverse conditions, unplanned shutdowns or other deviations to the agreed scope and project plan must be reviewed with the Client Sponsor prior

to continuing work. This will include any safe work permit and hazard assessment updates.

**Completion**

- Montrose personnel will report any process concerns, incidents or near misses to the Client Sponsor prior to leaving the site
- Montrose will clean up our work area to the same condition as it was prior to our arrival
- We will ensure that all utilities, connection points or equipment have been returned to the pre-project condition or as stated in the safe work permit. In addition, we will walk out the job completion with Operations and the Client Sponsor if required by the facility.

### 2.4.2 Safety Program and Requirements

Montrose has a comprehensive health and safety program that satisfies State and Federal OSHA requirements. The program includes an Illness and Injury Prevention Program, site-specific safety meetings, and training in safety awareness and procedures. The basic elements include:

- All regulatory required policies/procedures and training for OSHA, EPA, FMCSA, and MSHA
- Medical monitoring, as necessary
- Use of Personal Protective Equipment (PPE) and chemical detection equipment
- Hazard communication
- Pre-test and daily toolbox meetings
- Continued evaluation of work and potential hazards
- Near-miss and incident reporting procedures as required by Montrose and the Client

Montrose will provide standard PPE to employees. The PPE will include but is not limited to; hard hats, safety shoes, glasses with side shields or goggles, hearing protection, hand protections, and fall protection. In addition, our trailers are equipped with four gas detectors to ensure that workspace has no unexpected equipment leaks or other ambient hazards.

The detailed Site Safety Plan for this project is attached to this test plan in Appendix "S".

# 3.0 Sampling and Analytical Procedures

## 3.1 Test Methods

The test methods for this test program have been presented in Table 1-1. Additional information regarding specific applications or modifications to standard procedures is presented below.

### 3.1.1 EPA Method 1

#### Sample and Velocity Traverses for Stationary Source

EPA Method 1 is used to assure that representative measurements of volumetric flow rate are obtained by dividing the cross-section of the stack or duct into equal areas, and then locating a traverse point within each of the equal areas. Acceptable sample locations must be located at least two stack or duct equivalent diameters downstream from a flow disturbance and one-half equivalent diameter upstream from a flow disturbance.

Pertinent information regarding the performance of the method is presented below:

- As discussed with ODEQ during project planning, all sampling will be performed at a single point in the centroid of the stack

The sample port and traverse point locations are detailed in Appendix A.

### 3.1.2 EPA Method 2

#### Determination of Stack Gas Velocity and Volumetric Flow Rate (Type S Pitot Tube)

EPA Method 2 is used to measure the gas velocity using an S-type pitot tube connected to a pressure measurement device, and to measure the gas temperature using a calibrated thermocouple connected to a thermocouple indicator. Typically, Type S (Stausscheibe) pitot tubes conforming to the geometric specifications in the test method are used, along with an inclined manometer. The measurements are made at traverse points specified by EPA Method 1. The molecular weight of the gas stream is determined from independent measurements of $O_2$, $CO_2$, and moisture. The stack gas volumetric flow rate is calculated using the measured average velocity head, the area of the duct at the measurement plane, the measured average temperature, the measured duct static pressure, the molecular weight of the gas stream, and the measured moisture.

Pertinent information regarding the performance of the method is presented below:

- S-type pitot tube coefficient is 0.84
- A Shortridge multimeter may be used to measure velocity

The typical sampling system is detailed in Figure 3-1.

### 3.1.3 EPA Method 4

#### Determination of Moisture Content in Stack Gas

EPA Method 4 is a manual, non-isokinetic method used to measure the moisture content of gas streams. Gas is sampled at a constant sampling rate through a probe and impinger train. Moisture is removed using a series of pre-weighed impingers containing methodology-specific liquids and silica gel immersed in an ice water bath. The impingers are weighed after each run to determine the percent moisture.

Pertinent information regarding the performance of the method is presented below:

- The reference method is used to measure moisture
- Moisture sampling is performed as part of the pollutant sample trains
- Since it is theoretically impossible for measured moisture to be higher than psychrometric moisture, the psychrometric moisture is also calculated, and the lower moisture value is used in the calculations
- Moisture sampling is performed at a single point in the centroid of the stack

The typical sampling system is detailed in Figure 3-1.

### 3.1.4 ODEQ Method 5

#### Determination of Particulate Matter from Stationary Sources

Oregon DEQ Method 5 is a manual, isokinetic method used to measure filterable and condensable PM emissions. The samples are analyzed gravimetrically. This method is performed in conjunction with EPA Methods 1 through 4. The stack gas is sampled through a nozzle, probe, filter, and impinger train. PM results are reported in emission concentration and emission rate units.

Pertinent information regarding the performance of the method is presented below:

- Glass sample nozzles and probe liners are used
- Glass fiber filters are used
- Condensed water is measured gravimetrically
- A heated flexible probe extension may be used to connect the sample probe to the impinger box
- Polyethylene wash bottles are used
- Glass or polyethylene sample bottles are used
- Single-point isokinetic sampling is performed at this stack
- Single-port isokinetic sampling is performed at this stack
- The analytical detection limit for ODEQ Method 5 is 7 milligrams (mg) of PM as specified in Section 2.8.b of the ODEQ Source Sampling Manual. If

the net weight is less than 7 mg, the calculations are performed using 7 mg

- Target sample duration: 180 minutes
- Minimum Required Sample Volume: 31.8 dscf, targeted at 95.4-135 dscf

The typical sampling system is detailed in Figure 3-1.

**Figure 3-1**
**ODEQ Method 5 Sampling Train**

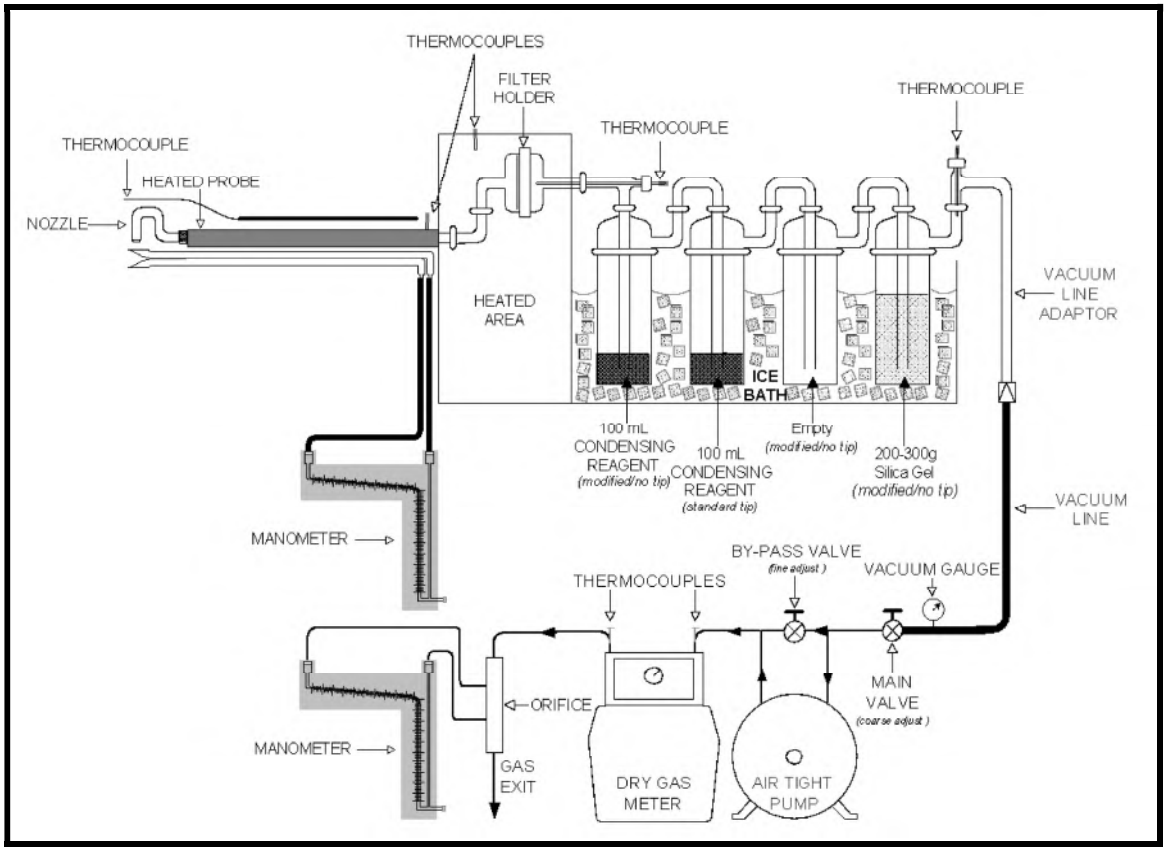


### 3.1.5 EPA Methods 3A, 6C, 7E, and 10

#### Determination of Oxygen, Carbon Dioxide, Sulfur Dioxide, Nitrogen Oxides, and Carbon Monoxide Concentrations in Emissions from Stationary Sources (Instrumental Analyzer Procedures)

Concentrations of $O_2$, $CO_2$, $SO_2$, NOx, and CO are measured simultaneously using EPA Methods 3A, 6C, 7E, and 10, which are instrumental test methods. Conditioned gas is sent to a series of analyzers to measure the gaseous emission concentrations. The performance requirements of the method must be met to validate the data.

Pertinent information regarding the performance of the method is presented below:

- A dry extractive sampling system is used to report emissions on a dry basis
- A paramagnetic analyzer is used to measure $O_2$
- A nondispersive infrared analyzer is used to measure $CO_2$
- An ultraviolet absorption analyzer is used to measure $SO_2$
- A chemiluminescent analyzer is used to measure NOx
- A gas filter correlation nondispersive infrared analyzer is used to measure CO
- The NOx output of the analyzer will be reported
- For gaseous emissions sampling, MDL are calculated for each analyzer. The ISDL is equal to the sensitivity of the instrumentation, which is 2% of the span value
- Target sample duration: 180 minutes

The typical sampling system is detailed in Figure 3-2.

**Figure 3-2**
**EPA Methods 3A ($O_2/CO_2$), 6C, 7E, 10 and 25A Sampling Train**

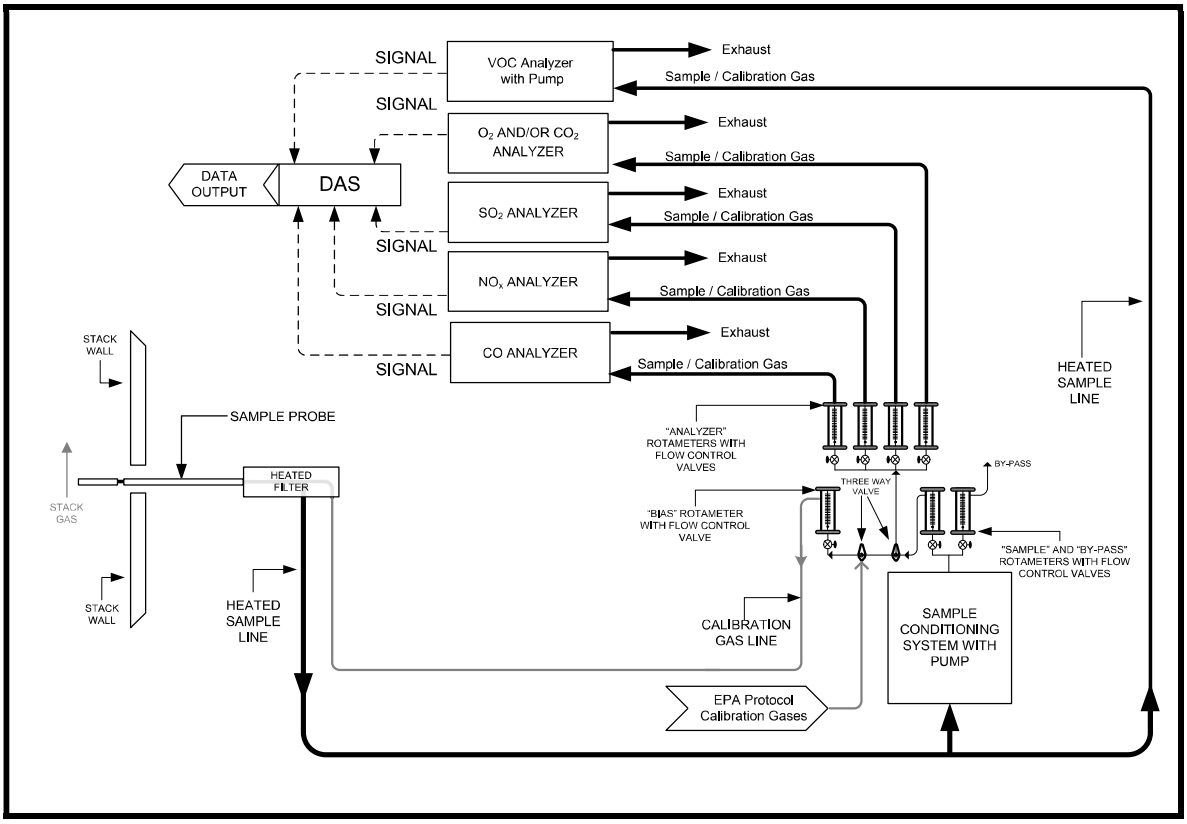


### 3.1.6 EPA Method 25A, Determination of Total Gaseous Organic Concentration Using a Flame Ionization Analyzer

EPA Method 25A is an instrumental test method used to measure the concentration of THC in stack gas. A gas sample is extracted from the source through a heated sample line and glass fiber filter to an FIA. Results are reported as volume concentration equivalents of the calibration gas or as carbon equivalents.

Pertinent information regarding the performance of the method is presented below:

- Method Options:
  - Results are reported in terms of propane
  - Results will be reported as Total VOCs, total non-methane VOCs, and methane
  - QA/QC as described by ODEQ methane concentration measurement recommended procedures
- Method Exceptions:

- For gaseous emissions sampling, MDL are calculated for each analyzer. The ISDL is equal to the sensitivity of the instrumentation, which is 2% of the span value.

- Target and/or Minimum Required Sample Duration: 180 minutes

The typical sampling system is detailed in Figure 3-2.

### 3.1.7 EPA Method 23

#### Determination of Polychlorinated Dibenzo-p-Dioxins and Polychlorinated Dibenzofurans from Stationary Sources

EPA Method 23 is a manual, isokinetic method to measure polychlorinated dibenzo-p-dioxins (PCDD) and polychlorinated dibenzofurans (PCDF) emissions using high resolution gas chromatography with high resolution mass spectroscopy (HRGC/HRMS). The stack gas is sampled through a nozzle, probe, filter, sorbent trap module encased in a water-cooled condenser, and impinger train. Dioxin/furan emissions are reported in emission concentration and emission rate units.

Pertinent information regarding the performance of the method is presented below:

- Acetone and toluene are used as the recovery solvents
- A heated flexible probe extension may be used to connect the sample probe to the impinger box
- Single-point isokinetic sampling is performed at this stack
- Single-port isokinetic sampling is performed at this stack
- Target sample duration: 180 minutes

The typical sampling system is detailed in Figure 3-3.

**Figure 3-3**
**EPA Method 23 Sampling Train**

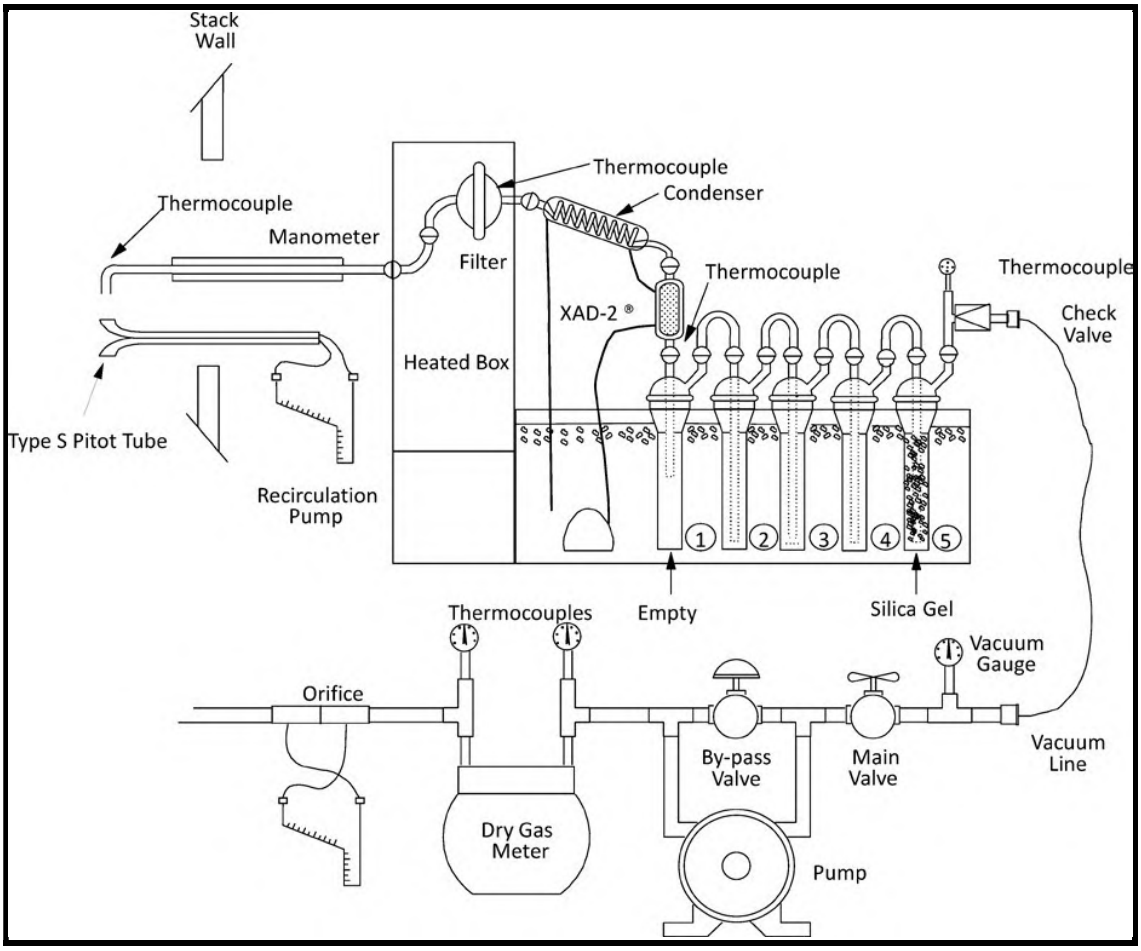


## 3.1.8 EPA Method 29

### Determination of Metals Emissions from Stationary Sources

EPA Method 29 is a manual, isokinetic test method to measure a variety of metals using inductively coupled argon plasma emission spectroscopy (ICAP) and cold vapor atomic absorption (CVAA) spectroscopy. This method is performed in conjunction with EPA Methods 1-4. A stack sample is withdrawn isokinetically from the source, filterable emissions are collected in the probe and on a heated filter, and condensable emissions are collected in an aqueous acidic solution of hydrogen peroxide (analyzed for all target analytes) and an optional aqueous acidic solution of potassium permanganate (required only when Hg is a target analyte). The recovered samples are digested, and appropriate fractions are analyzed for the target analytes which may include Hg by CVAAS and for Sb, As, Ba, Be, Cd, Cr, Co, Cu, Pb, Mn, Ni, P, Se, Ag, Tl, and Zn by ICAP or atomic absorption spectroscopy (AAS).

Graphite furnace atomic absorption spectroscopy (GFAAS) is used for analysis of Sb, As, Cd, Co, Pb, Se, and Tl if these elements require greater analytical sensitivity than can be obtained using ICAP. AAS may be used for analysis of all target analytes if the resulting in-stack method detection limits meet the goal of the testing program. Similarly, inductively coupled plasma-mass spectroscopy (ICP-MS) may be used for analysis of Sb, As, Ba, Be, Cd, Cr, Co, Cu, Pb, Mn, Ni, Ag, Tl and Zn. The results from analysis of individual fractions of the sample train are summed to obtain the total concentration of each metal per sample train.

Pertinent information regarding the performance of the method is presented below:

- The method is performed for the following target analytes: Antimony (Sb), Arsenic (As), Barium (Ba), Beryllium (Be), Cadmium (Cd), Chromium (Cr), Cobalt (Co), Copper (Cu), Lead (Pb), Manganese (Mn), Mercury (Hg), Nickel (Ni), Phosphorus (P), Selenium (Se), Silver (Ag), Thallium (Tl), Zinc (Zn)
- A heated flexible probe extension may be used to connect the sample probe to the impinger box
- Target sample duration: 180 minutes
- Single-point isokinetic sampling is performed at this stack
- Single-port isokinetic sampling is performed at this stack

- Target and/or Minimum Required Sample Volume: Approximately 95.4-135 dscf
- Estimated Laboratory Analytical Detection Limits:

| Element | CLN* MDL (µg/L) | Front Half MDL (µg) | Back Half MDL (µg) |
|---|---|---|---|
| Mn | 0.3 | 0.08 | 0.03 |
| Cu | 5 | 1.25 | 0.5 |
| Ba | 0.5 | 0.13 | 0.05 |
| Sb | 5 | 1.25 | 0.50 |
| Be | 0.2 | 0.05 | 0.02 |
| Co | 0.5 | 0.13 | 0.05 |
| P | 20 | 5.00 | 2.00 |
| Ag | 2 | 0.50 | 0.20 |
| Tl | 10 | 2.50 | 1.00 |
| Zn | 3 | 0.75 | 0.30 |
| Hg | 0.007 | 0.022 | 0.025 |
| Se | 15 | 3.75 | 1.50 |
| Pb | 5 | 1.25 | 0.50 |
| Ni | 3 | 0.75 | 0.30 |
| Cd | 0.4 | 0.10 | 0.04 |
| As | 7 | 1.75 | 0.70 |
| Total Cr | 0.8 | 0.20 | 0.08 |

**Note:** *CLN (Chester Lab Net)

Estimated In-Stack Detection Limits: These in stack detection limits are estimates only. They were based on the assumption approximately 95.4-135 dscf would be collected and 225 mL of total sample matrix collected. The actual in stack detection limits will vary as actual volumes of stack gas, sample matrix, and laboratory detection limits will not match these estimates.

| Element | In Stack Detection Limit (µg/dscm) |
|---|---|
| Mn | 0.02 |
| Cu | 0.42 |
| Ba | 0.04 |
| Sb | 0.42 |
| Be | 0.02 |
| Co | 0.04 |
| P | 1.67 |
| Ag | 0.17 |
| Tl | 0.83 |
| Zn | 0.25 |
| Hg | 0.0006 |
| Se | 1.25 |
| Pb | 0.42 |
| Ni | 0.25 |
| Cd | 0.03 |
| As | 0.58 |
| Total Cr | 0.07 |

Note: If an analyte measures below the laboratory detection limit, results shall be reported as less than the detection limit. Analytical Laboratory: Chester LabNet, Tigard, Oregon

The typical sampling system is detailed in Figure 3-4.

**Figure 3-4**
**EPA Method 29 (Hg) (Detached) Sampling Train**

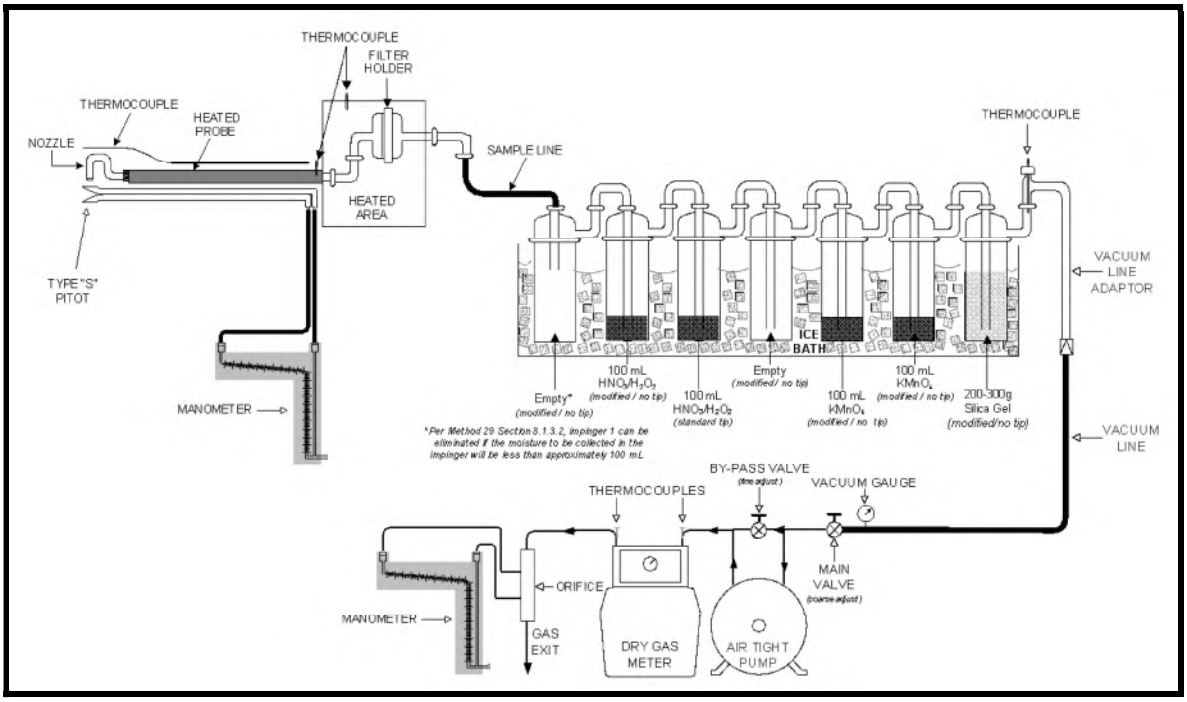


## 3.1.9 EPA SW-846 Method 0010 & CARB 429 PAH Suite

### Modified Method 5 Sampling Train

EPA SW-846 Method 0010 is a manual method used to measure PAH emissions. Gaseous and particulate pollutants are withdrawn from an emission source at an isokinetic sampling rate and are collected in a multicomponent sampling train. Principal components of the train include a high-efficiency glass- or quartz-fiber filter and a packed bed of porous polymeric adsorbent resin. The filter is used to collect organic-laden particulate materials and the porous polymeric resin to adsorb semivolatile organic species. Semivolatile species are defined as compounds with boiling points >100°C. Comprehensive chemical analyses of the collected sample are conducted to determine the concentration and identity of the organic materials. The samples will be analyzed by using the analysis section of CARB 429.

Pertinent information regarding the performance of the method is presented below:

- The filters are oven-dried at 105 °C (220 °F) for 2-3 hours, desiccated for 2 hours, and weighed
- Subject to the approval of the Administrator, a glass cyclone may be used between the probe and the filter holder as the total particulate catch is expected to exceed 100 mg

- Alternative leak check procedures may be used, where the probe and the rest of the sampling train are leak checked in one step at 381-mm Hg (15-in. Hg) vacuum
- In lieu of dichloromethane, Montrose proposes the use of acetone with a subsequent toluene rinse
- Analysis will be performed by CARB 429 with a high-resolution gas chromatograph and high-resolution mass spectrometry to achieve a lower, ng level detection limit
- Methylnaphthalene is not able to be analyzed for at the ng-level detection limit
- A heated flexible probe extension may be used to connect the sample probe to the impinger box
- Single-point isokinetic sampling is performed at this stack
- Single-port isokinetic sampling is performed at this stack
- Target Sample Duration: 180 minutes
- Target Sample Volume: 30-40 dscf per hour, approximately 95.4-135 dscf

- Estimated Laboratory Analytical Detection Limits:

| PAH | MDL (ng) | LOQ (ng) | Observed MDL (ng) |
|---|---|---|---|
| Naphthalene | 0.5 | 1 | 2620 |
| 2-Methylnaphthalene | 0.5 | 1 | 11 |
| Acenaphthene (CCC) | 0.5 | 1 | 443 |
| Acenaphthylene | 0.5 | 1 | 494 |
| Fluorene | 0.5 | 1 | 167 |
| Phenanthrene | 0.5 | 1 | 90.3 |
| Anthracene | 0.5 | 1 | 118 |
| Fluoranthene (CCC) | 0.5 | 1 | 3.68 |
| Pyrene | 0.5 | 1 | 3.34 |
| Benzo(a)anthracene | 0.5 | 1 | 2.08 |
| Chrysene | 0.5 | 1 | 2.09 |
| Benzo(b)fluoranthene, | 0.5 | 1 | 1.53 |
| Benzo(k)fluoranthene | 0.5 | 1 | 1.55 |
| Benzo(e)pyrene | 0.5 | 1 | 1.63 |
| Benzo(a)pyrene (CCC), | 0.5 | 1 | 2.39 |
| Perylene | 0.5 | 1 | 2.76 |
| Indeno(1,2,3-cd) pyrene | 0.5 | 1 | 2.58 |
| Dibenz(a,h) anthracene, | 0.5 | 1 | 2.79 |
| Benzo(g,h,i) perylene | 0.5 | 1 | 2.72 |

**Note: The MDL and LOQ are estimated based on studies with clean samples, however certain compounds may have high intrinsic backgrounds that elevate the RL. CARB-429 has a formula for the calculation of the RL that incorporates the effects of background estimated detection limits which will be presented on a per-analyte and per-sample basis in the final report.**

**Note: The observed MDL is the actual MDL Montrose has observed on a similar source test from the analytical lab. The observed MDL presented here is the highest of 3 runs performed at a different test location. These numbers are provided as they are expected to be more in line with the actual detection limit that will be seen in this source test**

Estimated In-Stack Detection Limits: These in stack detection limits are estimates only. They were based on the assumption that approximately 95.4-135 dscf will be collected; However, the PAH analytical detection limit is provided on a mass basis. The observed MDL was used to determine the in-stack detection limit. The actual in stack detection limits will vary as actual volumes of stack gas, and the laboratory detection limits will not match these estimates.

| PAH | In Stack Detection Limit (ng/dscm) |
|---|---|
| Naphthalene | 970 |
| 2-Methylnaphthalene | 4.07 |
| Acenaphthene (CCC) | 164 |
| Acenaphthylene | 183 |
| Fluorene | 61.8 |
| Phenanthrene | 33.4 |
| Anthracene | 43.7 |
| Fluoranthene (CCC) | 1.36 |
| Pyrene | 1.24 |
| Benzo(a)anthracene | 0.77 |
| Chrysene | 0.77 |
| Benzo(b)fluoranthene, | 0.57 |
| Benzo(k)fluoranthene | 0.57 |
| Benzo(e)pyrene | 0.60 |
| Benzo(a)pyrene (CCC), | 0.88 |
| Perylene | 1.02 |
| Indeno(1,2,3-cd) pyrene | 0.96 |
| Dibenz(a,h) anthracene, | 1.03 |
| Benzo(g,h,i) perylene | 1.01 |

Note: If individual PAH analytes measure below the laboratory detection limit, results shall be reported as less than the detection limit. For determination of the PAH suite emission factor, contributing PAH compounds which are found to be below the detection limit an equivalent value shall be calculated as half the detection limit as per the Oregon Source Sampling manual 2.11.c.

Note: Target analytes, PAHs from M8270 include: Naphthalene, 2-Methylnaphthalene, Acenaphthene, Acenaphthylene, Fluorene, Phenanthrene, Anthracene, Fluoranthene, Pyrene, Benzo(a)anthracene, Chrysene, Benzo(b)fluoranthene, Benzo(k)fluoranthene, Benzo(e)pyrene, Benzo(a)pyrene, Perylene, Indeno(1,2,3-cd) pyrene, Dibenz(a,h) anthracene, Benzo(g,h,i) perylene

Note: Analytical Laboratory: Enthalpy Analytical, Wilmington, North Carolina

The typical sampling system is detailed in Figure 3-5.

**Figure 3-5**
**EPA SW-846 Method 0010 Sampling Train**

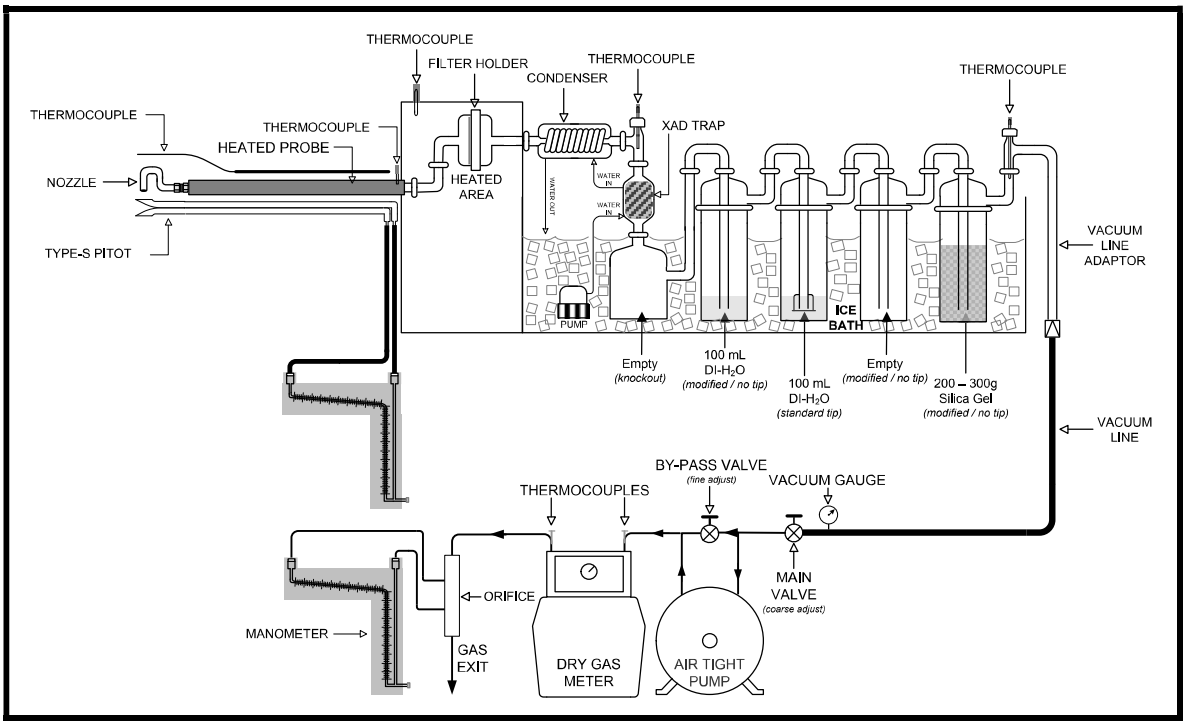


## 3.1.10 EPA Method TO-15

### Determination of Volatile Organic Compounds (VOCs) in Air Collected in Specially-Prepared Canisters and Analyzed by Gas Chromatography/Mass Spectrometry (GC/MS)

EPA Method TO-15 is a manual method used to measure VOC emissions. The atmosphere is sampled by introduction of air into a specially-prepared stainless steel canister. Both subatmospheric pressure and pressurized sampling modes use an initially evacuated canister. A pump ventilated sampling line is used during sample collection with most commercially available samplers. Pressurized sampling requires an additional pump to provide positive pressure to the sample canister. A sample of air is drawn through a sampling train comprised of components that regulate the rate and duration of sampling into the pre-evacuated and passivated canister.

After the air sample is collected, the canister valve is closed, an identification tag is attached to the canister, and the canister is transported to the laboratory for analysis. Upon receipt at the laboratory, the canister tag data is recorded and the canister is stored until

analysis. Storage times of up to thirty days have been demonstrated for many of the VOCs.

To analyze the sample, a known volume of sample is directed from the canister through a solid multisorbent concentrator. A portion of the water vapor in the sample breaks through the concentrator during sampling, to a degree depending on the multisorbent composition, duration of sampling, and other factors. Water content of the sample can be further reduced by dry purging the concentrator with helium while retaining target compounds. After the concentration and drying steps are completed, the VOCs are thermally desorbed, entrained in a carrier gas stream, and then focused in a small volume by trapping on a reduced temperature trap or small volume multisorbent trap. The sample is then released by thermal desorption and carried onto a gas chromatographic column for separation.

As a simple alternative to the multisorbent/dry purge water management technique, the amount of water vapor in the sample can be reduced below any threshold for affecting the proper operation of the analytical system by reducing the sample size. For example, a small sample can be concentrated on a cold trap and released directly to the gas chromatographic column. The reduction in sample volume may require an enhancement of detector sensitivity.

Other water management approaches are also acceptable as long as their use does not compromise the attainment of the performance criteria listed in Section 11. A listing of some commercial water management systems is provided in Appendix A of the method. One of the alternative ways to dry the sample is to separate VOCs from condensate on a low temperature trap by heating and purging the trap.

The analytical strategy for Compendium Method TO-15 involves using a high resolution GC coupled to a mass spectrometer. If the mass spectrometer is a linear quadrupole system, it is operated either by continuously scanning a wide range of mass to charge ratios (SCAN mode) or by monitoring select ion monitoring mode (SIM) of compounds on the target list. If the mass spectrometer is based on a standard ion trap design, only a scanning mode is used (note however, that the Selected Ion Storage (SIS) mode for the ion trap has features of the SIM mode). Mass spectra for individual peaks in the total ion chromatogram are examined with respect to the fragmentation pattern of ions corresponding to various VOCs including the intensity of primary and secondary ions. The fragmentation pattern is compared with stored spectra taken under similar conditions, in order to identify the compound. For any given compound, the intensity of the primary fragment is compared with the system response to the primary fragment for known amounts of the compound. This establishes the compound concentration that exists in the sample.

Mass spectrometry is considered a more definitive identification technique than single specific detectors such as FID, ECD, PID, or a multidetector arrangement of these (see discussion in Compendium Method TO-14A). The use of both gas chromatographic retention time and the generally unique mass fragmentation patterns reduce the chances for

misidentification. If the technique is supported by a comprehensive mass spectral database and a knowledgeable operator, then the correct identification and quantification of VOCs is further enhanced.

Pertinent information regarding the performance of the method is presented below:

- Target sample duration: 180 minutes

The typical sampling system is detailed in Figure 3-6.

**Figure 3-6**
**EPA TO-15 Sampling Train**

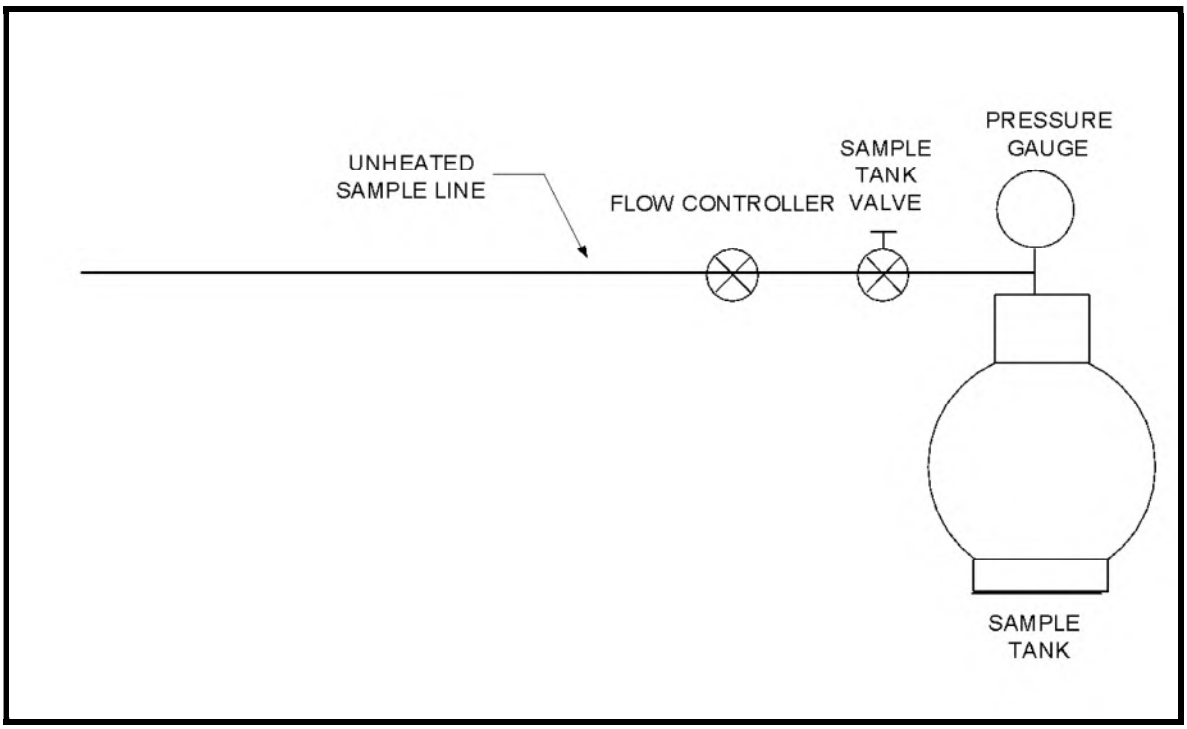


### 3.1.11 NCASI Method IM/CAN/WP-99.02

#### Impinger/Canister Source Sampling Method for Selected HAPs and Other Compounds

NCASI Method IM/CAN/WP-99.02 is a manual method used to measure a select group of organic compounds including but not limited to six compounds termed "Total HAPs" emissions in the Plywood and Composite Wood Products (PWCP) MACT, terpene compounds, acetone, and cis-1,2-dichloroethylene. This method is performed in conjunction with EPA Methods 1, 2, 3A, and 4. Sampling gas passes through three chilled aqueous midget impingers containing chilled organic water. A Teflon-headed pump and a critical orifice or rotameter are used to maintain a constant flow through the impingers. A portion of the gas exiting the impingers is drawn into an evacuated, inert stainless-steel canister to capture

the compounds not trapped in the aqueous impingers. The flow rate must be 400 ± 100 ml/min. The quality assurance measured used to verify the performance of the collection train(s) include conducting duplicate sample runs, run spikes, train spikes, field spikes, and field blanks. The duplicate and spiked sample trains are operated concurrently with a "normal" sample train.

Pertinent information regarding the performance of the method is presented below:

- A run spike is conducted to meet the spike recovery criteria. The spike concentration will be derived from comparable data from a Hogged Fuel Boiler.
- A second Teflon filter may be used after the impingers to prevent any fiber, debris, or water from accidentally being drawn into the critical orifice or rotameter
- A heated flexible probe extension may be used to connect the sample probe to the impinger box
- Dual impinger trains are connected to one sample probe and heated filter box
- Sample flow rate is established by the use of a critical orifice or a rotameter and pre- and post-flow measurements
- Target sample duration: 180 minutes

The typical sampling system is detailed in Figure 3-7.

**Figure 3-7**
**NCASI 99.02 Sampling Train**

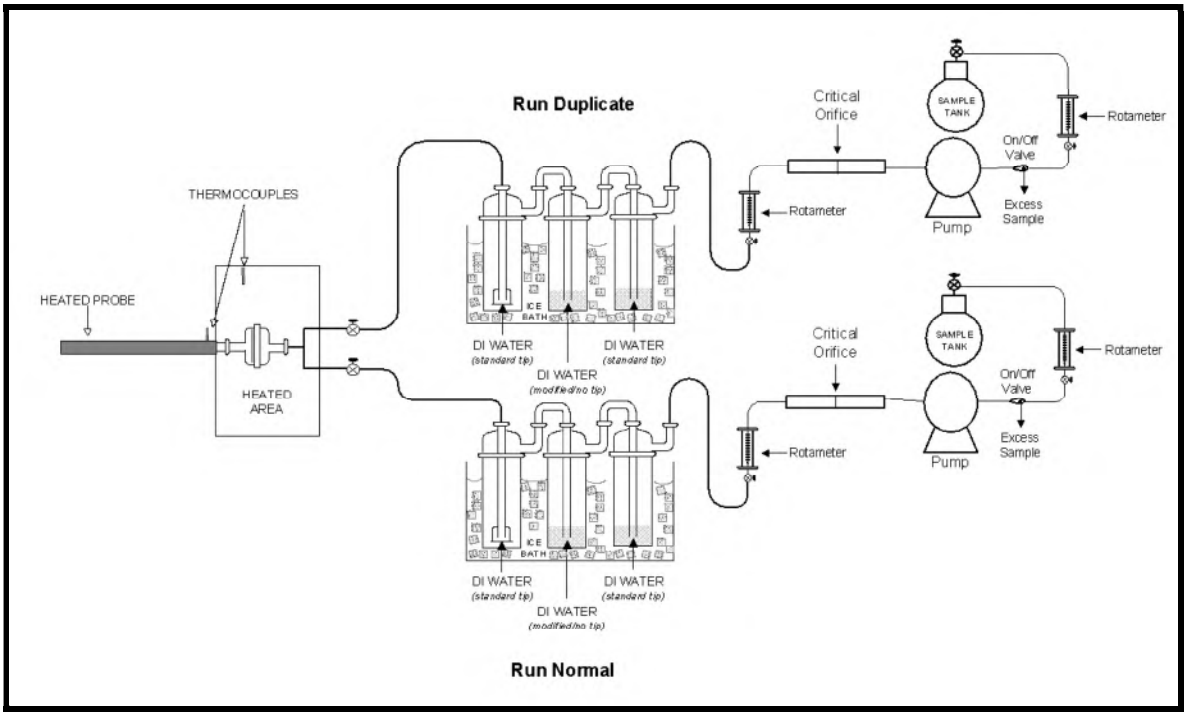


## 3.1.12 ASTM D3172 and ASTM D3176

### Ultimate and Proximate Analysis of a Wood Fuel Sample for Heat Content and F-Factor

Pertinent information regarding the performance of the method is presented below:

- The test methods will be modified by the lab for biomass in that the ash will be produced and analyzed at 600 C.

## 3.1.13 ASTM D5373, ASTM D3173-03, and ASTM D3302-07ae1, Grind

### Biochar Sample Analysis: Total carbon, hydrogen, and nitrogen; moisture; and sample prep

Pertinent information regarding the performance of the method is presented below:

- Two biochar samples will be collected by Montrose and Valley Environmental per full test program day. Only one sample will be analyzed, the other will be held in archive if needed.
- The samples will be analyzed for total carbon, hydrogen, and nitrogen, and moisture. Sample prep (drying and grinding) will only be done if necessary. It is anticipated that the sample prep will be required.

## 3.2 Process Test Methods

The applicable regulations do not require process samples to be collected during this test program.

# 4.0 Quality Assurance and Reporting

## 4.1 QA Audits

Montrose has instituted a rigorous QA/QC program for its air quality testing. Quality assurance audits are performed as part of the test program to ensure that the results are calculated using the highest quality data available. This program ensures that the emissions data we report are as accurate as possible. The procedures included in the cited reference methods are followed during preparation, sampling, calibration, and analysis. Montrose is responsible for preparation, calibration, and cleaning of the sampling apparatus. Montrose will also perform the sampling, sample recovery, storage, and shipping. Approved contract laboratories may perform some of the preparation and sample analyses, as needed.

## 4.2 Quality Control Procedures

Montrose calibrates and maintains equipment as required by the methods performed and applicable regulatory guidance. Montrose follows internal procedures to prevent the use of malfunctioning or inoperable equipment in test programs. All equipment is operated by trained personnel. Any incidence of nonconforming work encountered during testing is reported and addressed through the corrective action system.

### 4.2.1 Equipment Inspection and Maintenance

Each piece of field equipment that requires calibration is assigned a unique identification number to allow tracking of its calibration history. All field equipment is visually inspected prior to testing and includes pre-test calibration checks as required by the test method or regulatory agency.

### 4.2.2 Audit Samples

When required by the test method and available, Montrose obtains EPA TNI SSAS audit samples from an accredited provider for analysis along with the samples. Currently, the SSAS program has been suspended pending the availability of a second accredited audit sample provider. If the program is reinstated, the audit samples will be ordered. If required as part of the test program, the audit samples are stored, shipped, and analyzed along with the emissions samples collected during the test program. The audit sample results are reported along with the emissions sample results.

## 4.3 Data Analysis and Validation

Montrose converts the raw field, laboratory, and process data to reporting units consistent with the permit or subpart. Calculations are made using proprietary computer spreadsheets or data acquisition systems. One run of each test method is also verified using a separate example calculation. The example calculations are checked against the spreadsheet results and are included in the final report. The "Standard Conditions" for this project are 29.92 inches of mercury and 68 °F.

## 4.4 Sample Identification and Custody

The on-site Field Project Manager will assume or assign the role of sample and data custodian until relinquishing custody. The sample custodian will follow proper custody procedures before departing from the test site including:

- Assign the unique sample identification number to each sample
- Attach sample labels and integrity seals to all samples
- Complete COC forms, ensuring that the sample identification numbers on the samples match the sample identification numbers on the COC
- Pack and store samples in accordance with the test method requirements in appropriate transport containers for protection from breakage, contamination, or loss
- Keep samples in a secure locked area if not in the direct presence of Montrose staff

The sample custodian will follow proper custody procedures upon arriving at the Montrose office including:

- Remove samples and COC documents from vehicles and check into designated secure sample holding areas
- Store samples requiring additional measures such as refrigeration or dry ice appropriately

## 4.5 Quality Statement

Montrose is qualified to conduct this test program and has established a quality management system that led to accreditation with ASTM Standard D7036-04 (Standard Practice for Competence of Air Emission Testing Bodies). Montrose participates in annual functional assessments for conformance with D7036-04 which are conducted by the American Association for Laboratory Accreditation (A2LA). All testing performed by Montrose is supervised on site by at least one Qualified Individual (QI) as defined in D7036-04 Section 8.3.2. Data quality objectives for estimating measurement uncertainty within the documented limits in the test methods are met by using approved test protocols for each project as defined in D7036-04 Sections 7.2.1 and 12.10. Additional quality assurance information is included in the appendices. The content of this test plan is modeled after the EPA Emission Measurement Center Guideline Document (GD-042).

## 4.6 Reporting

Montrose will prepare a final report to present the test data, calculations/equations, descriptions, and results. Prior to release by Montrose, each report is reviewed and certified by the project manager and their supervisor, or a peer. Source test reports will be submitted to the facility or appropriate regulatory agency (upon customer approval) within

60 days of the completion of the field work. The report will include a series of appendices to present copies of the intermediate calculations and example calculations, raw field data, laboratory analysis data, process data, and equipment calibration data.

### 4.6.1 Example Report Format

The report is divided into various sections describing the different aspects of the source testing program. Figure 4-1 presents a typical Table of Contents for the final report.

**Figure 4-1**
**Typical Report Format**

**Cover Page**

**Certification of Report**

**Table of Contents**

**Section**

1.0 Introduction

2.0 Plant and Sampling Location Descriptions

3.0 Sampling and Analytical Procedures

4.0 Test Discussion and Results

5.0 Internal QA/QC Activities

**Appendices**

A Field Data and Calculations

B Facility Process Data

C Laboratory Analysis Data

D Quality Assurance/Quality Control

E Regulatory Information

### 4.6.2 Example Presentation of Test Results

Table 4-1 presents the typical tabular format that is used to summarize the results in the final source test report. Separate tables will outline the results for each target analyte and compare them to their respective emissions limits.

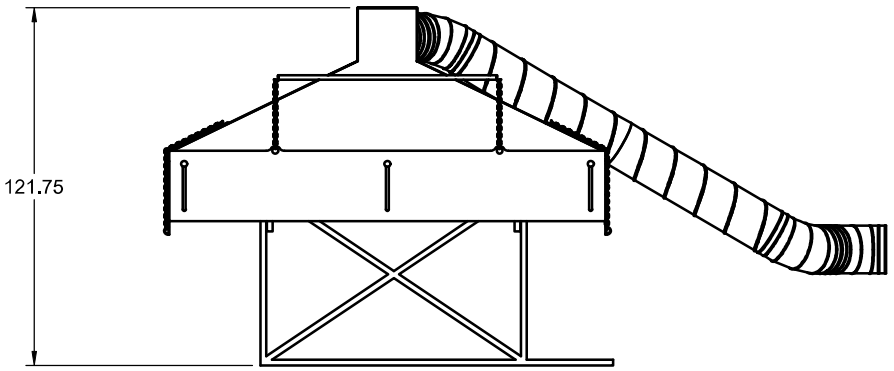


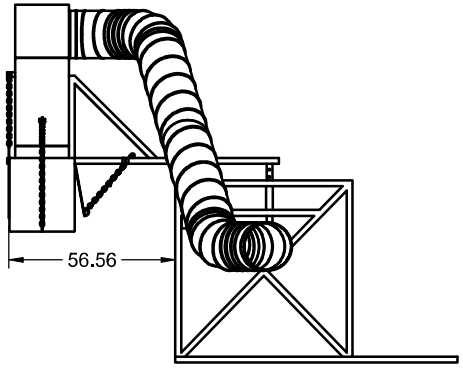


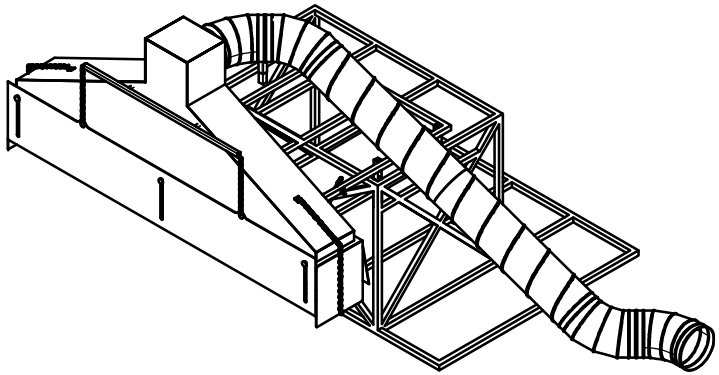

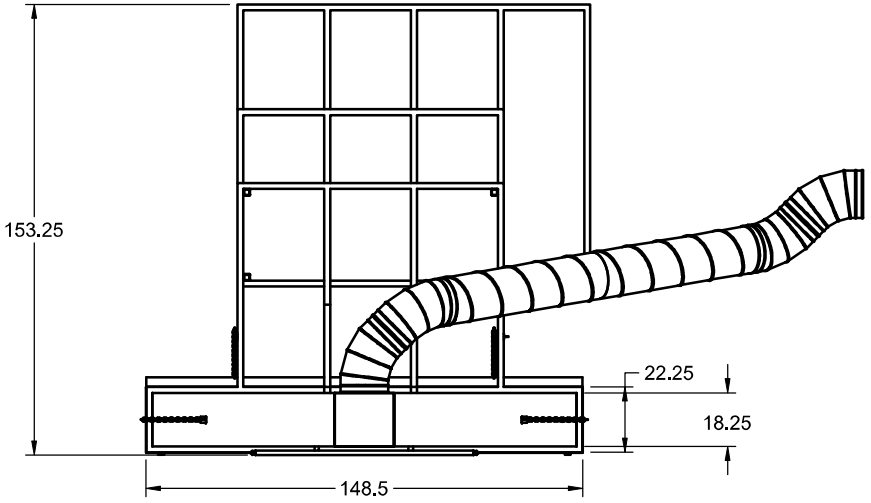


| | | | | |
|---|---|---|---|---|
| | PROJECT: ACI testing | | | |
| | TITLE: Hood setup assembly PERP BURN POS | | | |
| APPROVED | SIZE: B | CODE | DWG NO | REV |
| CHECKED | | | | |
| DRAWN: Chris Giddings 1/26/2023 | SCALE: 1:40 | WEIGHT | SHEET: 1/5 | |

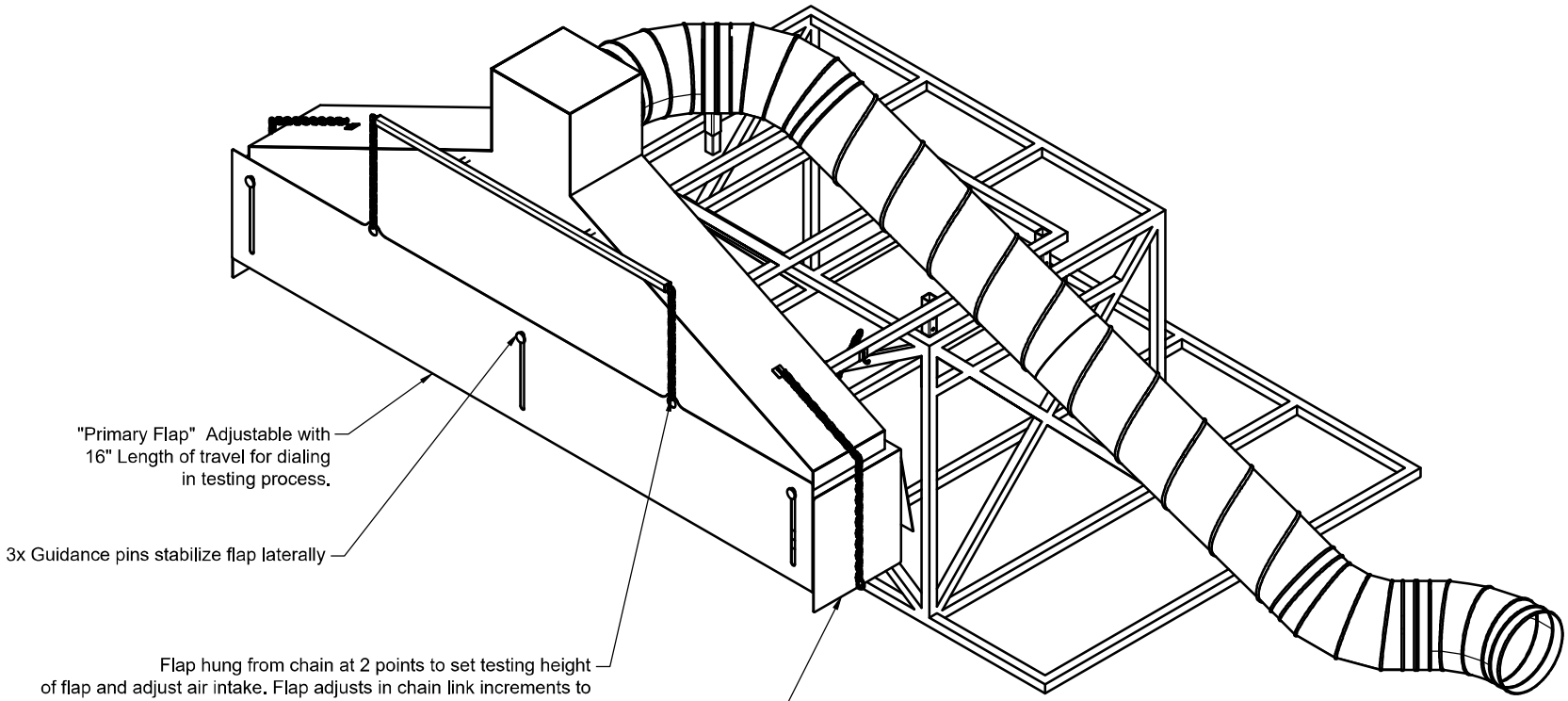
"Primary Flap" Adjustable with 16" Length of travel for dialing in testing process.
3x Guidance pins stabilize flap laterally
Flap hung from chain at 2 points to set testing height of flap and adjust air intake. Flap adjusts in chain link increments to ensure positioning repeatablilty for all sessions
Side flaps (both sides) connected to hood with hinge and positioned with chain. Flaps are adjustable via chain and hook increments from resting on burn chamber to wide open.

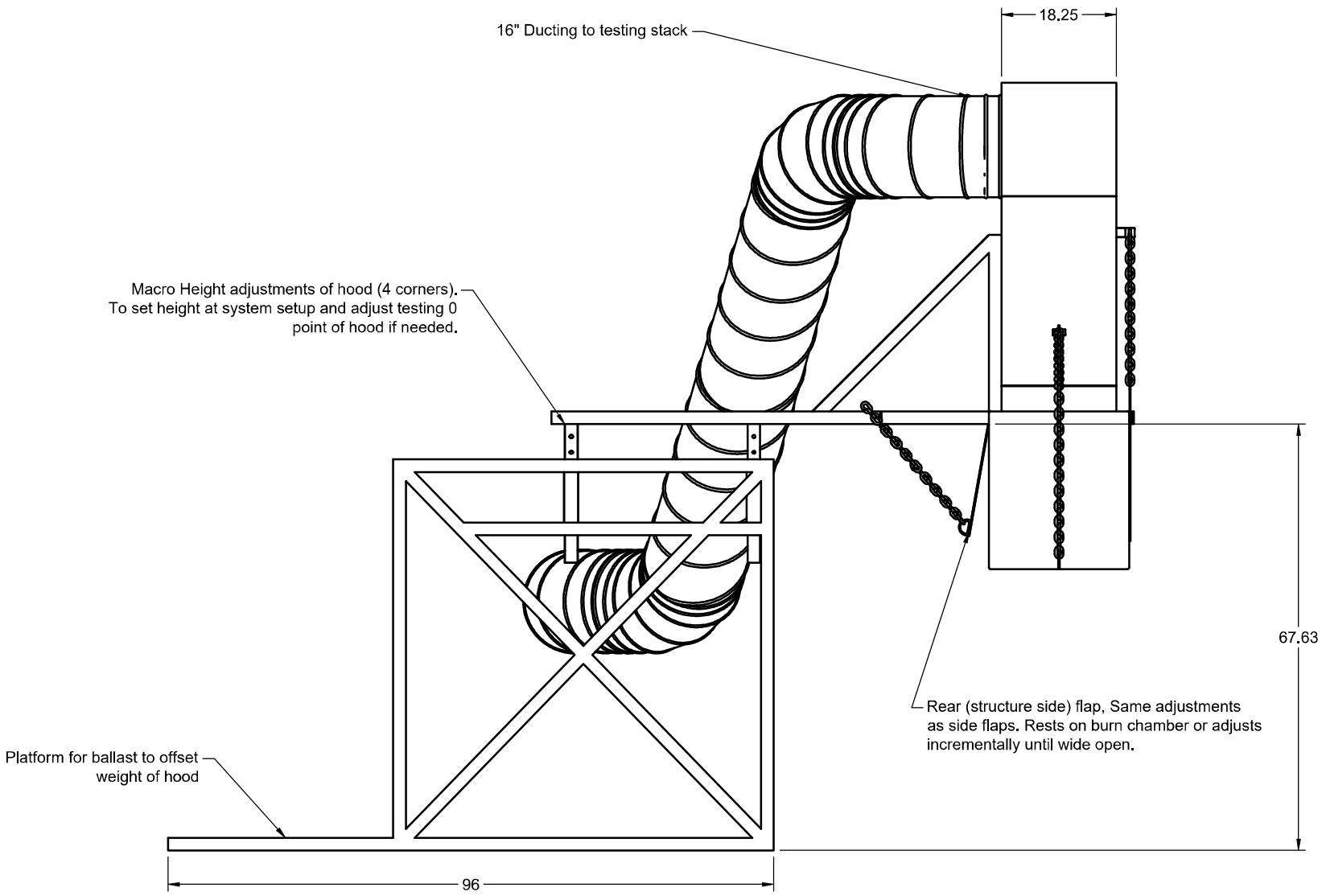
16" Ducting to testing stack
18.25
Macro Height adjustments of hood (4 corners). To set height at system setup and adjust testing 0 point of hood if needed.
67.63
Rear (structure side) flap, Same adjustments as side flaps. Rests on burn chamber or adjusts incrementally until wide open.
Platform for ballast to offset weight of hood
96

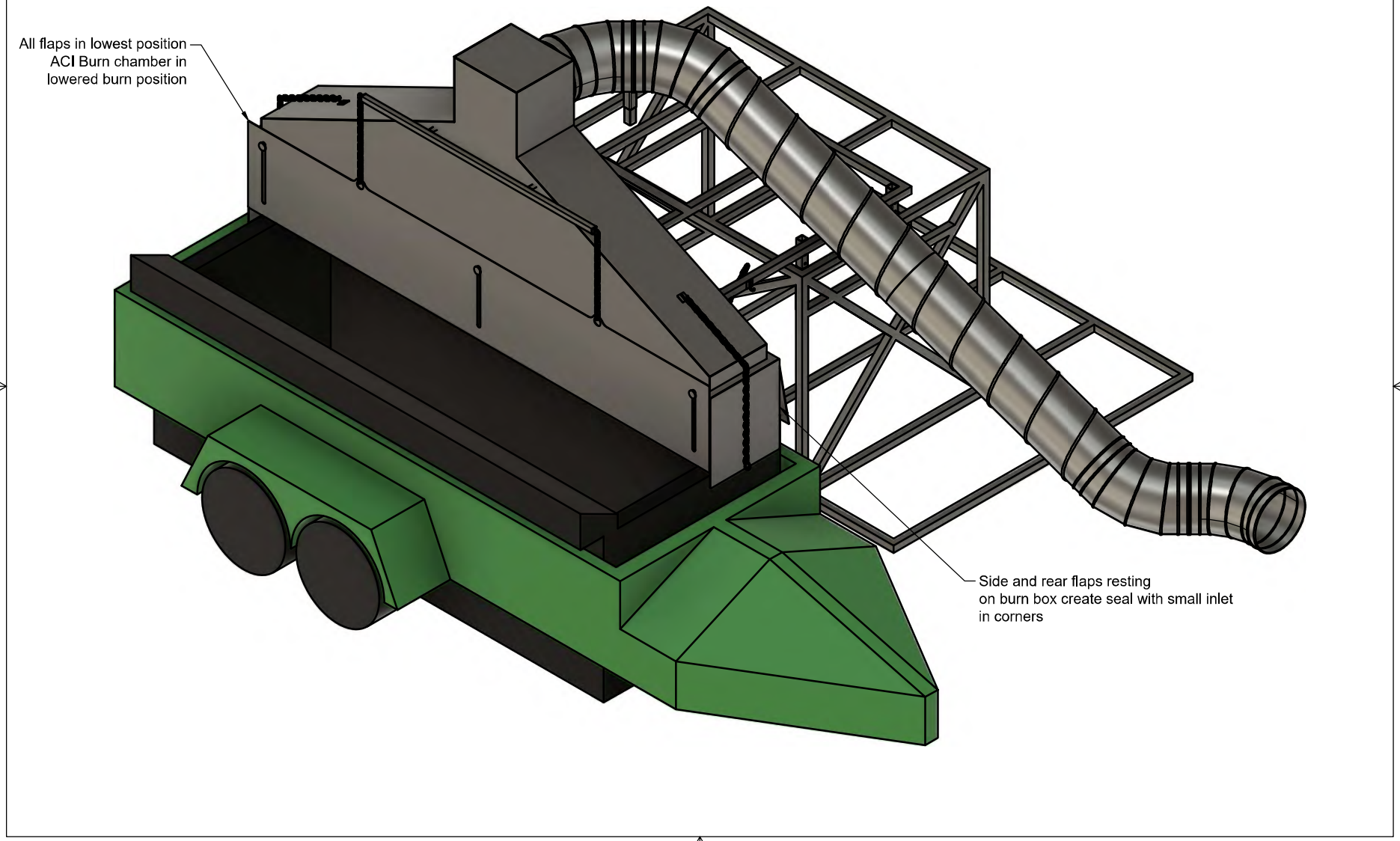
All flaps in lowest position
ACI Burn chamber in
lowered burn position
Side and rear flaps resting
on burn box create seal with small inlet
in corners

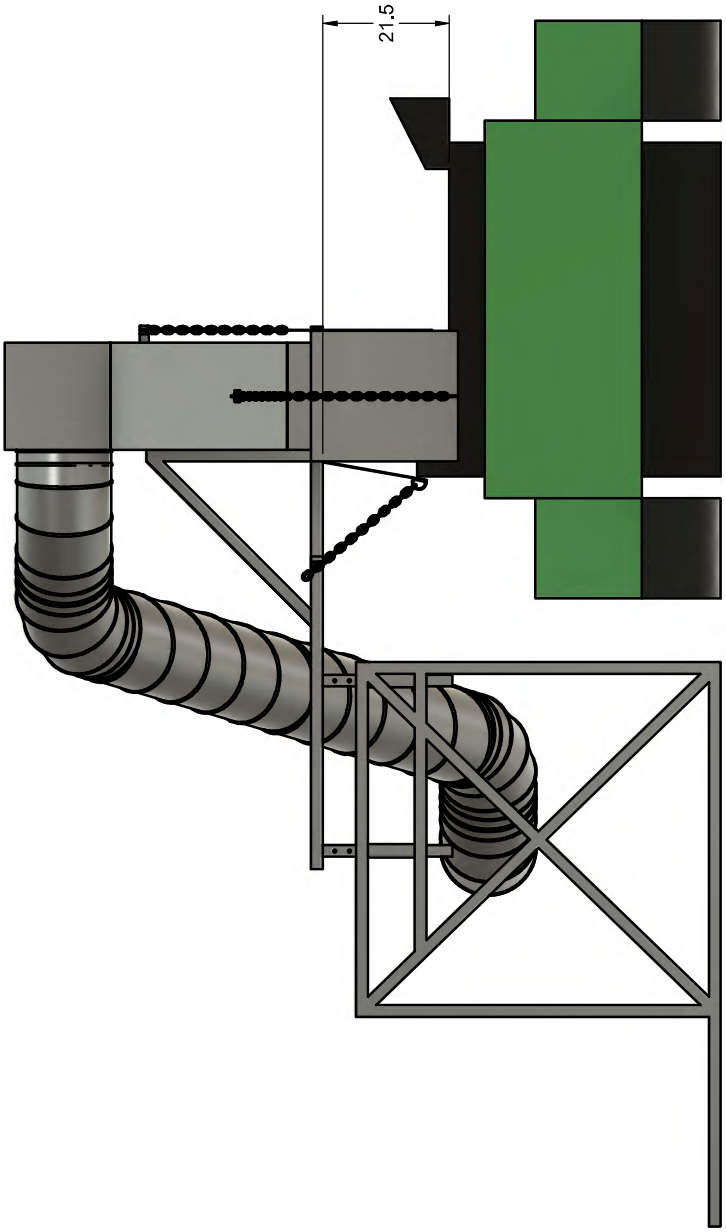


W021AS-021372-PP-1239

50 of 93

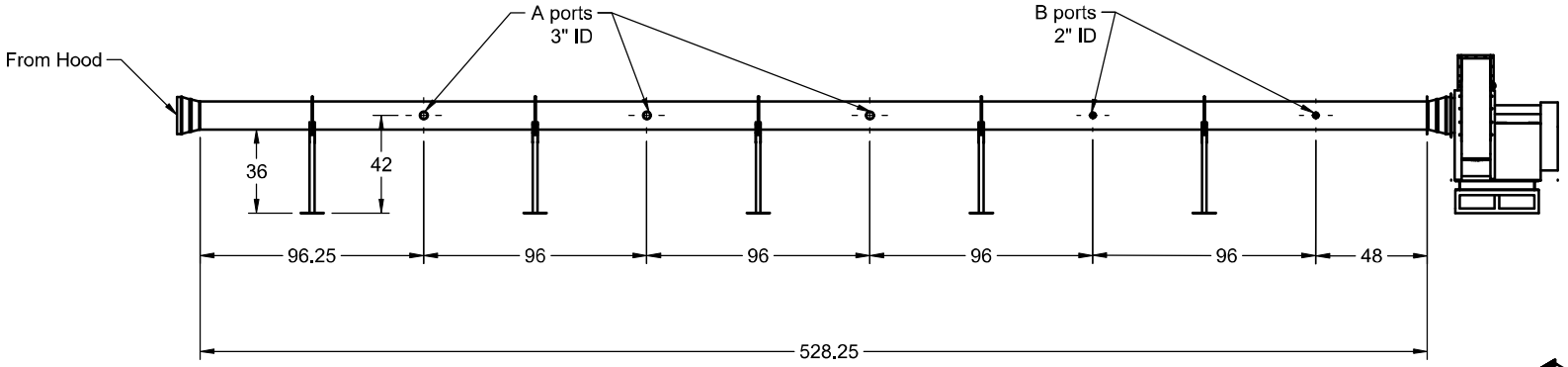


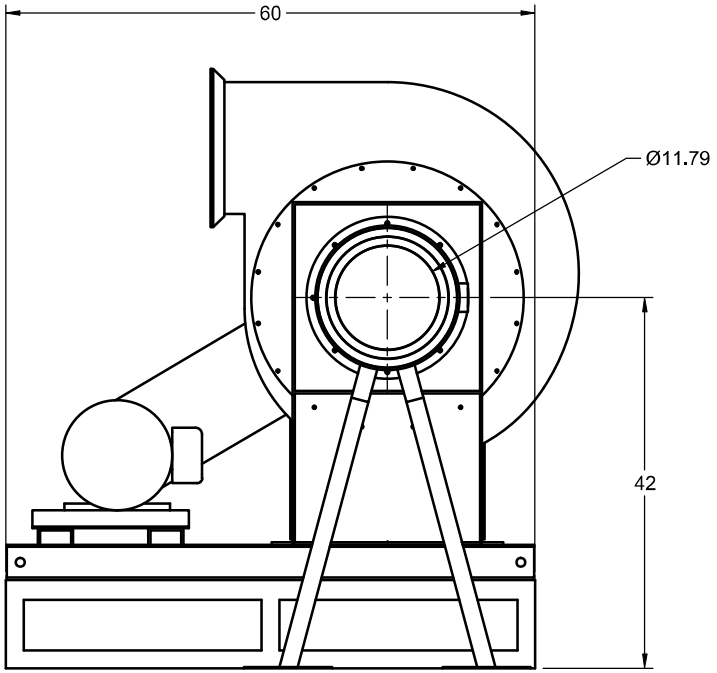


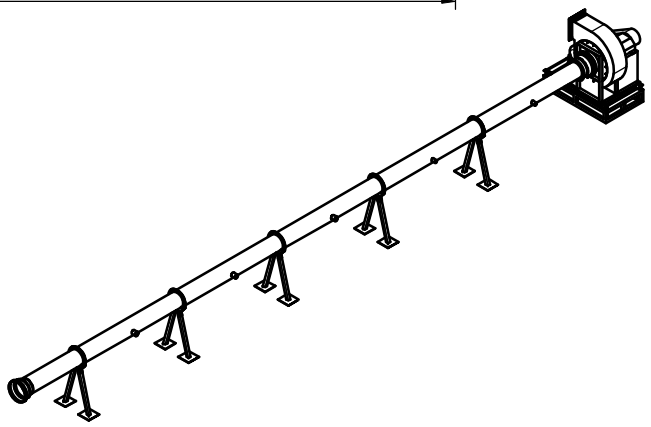

| | | | | | |
|---|---|---|---|---|---|
| | PROJECT: ACI Testing | | | | |
| | TITLE: Testing stack with blower | | | | |
| APPROVED | SIZE: B | CODE | DWG NO | | REV |
| CHECKED | | | | | |
| DRAWN Chris Giddings 1/27/2023 | SCALE 0.006074 | WEIGHT | | SHEET 1/1 | |

# Appendix E.2
# Permit Excerpts

# ASSIGNMENT

to

# GENERAL TITLE V OPERATING PERMIT

Department of Environmental Quality
Northwest Region
700 NE Multnomah St., Suite 600
Portland, OR 97232

PERMITTEE:

Valley Environmental LLC
25272 S. Central Point Road
Canby, OR 97013

PLANT SITE LOCATION:

Air Curtain Incinerator (Mobile Unit)
Portable

INFORMATION RELIED UPON:

Application No.: 034513
Date Received: 11/28/2022

LAND USE COMPATIBILITY STATEMENT:

See permit conditions 3.0 and 12.6.

**ASSIGNMENT:** The permittee identified above is assigned by the Department of Environmental Quality to the General TV Operating Permit listed below in accordance with ORS 468A.040, OAR 340-218-0090 and based on the land use compatibility findings included in the permit record (note: land use compatibility statements are not applicable to portable sources).

Joshua Alexander

Joshua Alexander, Northwest Region Air Quality Permit Manager

01/19/2023

Dated

**General Permit Issued:**

| General Permit Number | Expiration Date | Source Category Description |
|---|---|---|
| AQGP-TV ACI | **09/01/2027** | Incinerators with two or more tons per day capacity - air curtain incinerator, stationary or portable; or<br>All sources subject to a NESHAP under OAR 340 division 244, or a NSPS under OAR 340 division 238 |
| **Rule Citation** | OAR 340-216-8010, Table 1, Part B, 43 and/or OAR 340-216-8010, Table 1, Part B, 88. | |
| **SIC** | 4953 | |
| **NAICS** | 562213 | |

DEQ:HQ/file

**SUPPLEMENTAL INFORMATION:**

| | | |
|---|---|---|
| **Facility contact:** | | |
| Name: | Ryan Ramage, CEO/Owner | |
| Phone number: | (503) 799-9728 | |
| Facsimile number: | | |
| e-mail address: | rramage@valleyenvironmental.net | |
| **Permit Summary:** | | |
| Source Test Requirement | **Yes- Opacity** | See Condition 10.1 |
| NSPS (40 CFR Part 60) | **Yes** | Subpart CCCC and/or EEEE |
| NESHAP (40 CFR Part 63) | No | N/A |
| **Reports Required:** | | |
| Annual and Semi-Annual | **Yes** | Submit by **Feb. 15th** and **Jul. 30th** |
| NSPS | **Yes- Opacity** | See Condition 12.1 |
| NESHAP | No | N/A |
| Other | Site Specific- Permittee Must Review | See Conditions 12.2 through 12.8 |
| **Public Notice:** | Category I | |
| **Application review report:** | | |
| The Department has reviewed the application for assignment to the General Permit and determined that the application is complete and the subject facility qualifies for assignment to the General Permit. | | |

DEQ:HQ/file

# OREGON DEPARTMENT OF ENVIRONMENTAL QUALITY

# GENERAL TITLE V OPERATING PERMIT

Air Operation Section
700 NE Multnomah Street, Suite 600
Portland, OR 97232-4100
Telephone: (503) 229-5696

This permit is being issued in accordance with the provisions of ORS 468A.040.

**ISSUED BY THE DEPARTMENT OF ENVIRONMENTAL QUALITY**

| | |
|---|---|
| Signed copy on file with DEQ | Sept. 19, 2022 |
| Ali Mirzakhalili, Air Quality Division Administrator | Date |

Source(s) Permitted to Discharge Air Contaminants (OAR 340-216-8010):

| Table 1 Code | Source Description | SIC/NAICS |
|---|---|---|
| Part B, 43 | Incinerators with two or more tons per day capacity – air curtain incinerator, stationary or portable | 4953/ 562213 |
| Part B, 88 | All sources subject to a NESHAP under OAR 340 division 244, or a NSPS under OAR 340 division 238 | NA |

## TABLE OF CONTENTS

1.0 PERMIT ASSIGNMENT ..... 2
2.0 DEVICE, PROCESS AND POLLUTION CONTROL DEVICE IDENTIFICATION ..... 3
3.0 RELATION TO LOCAL LAND USE LAWS ..... 3
4.0 GENERAL EMISSION STANDARDS AND LIMITS ..... 3
5.0 SPECIFIC PERFORMANCE AND EMISSION STANDARDS ..... 5
6.0 OPERATION AND MAINTENANCE REQUIREMENTS ..... 7
7.0 PLANT SITE EMISSION LIMITS ..... 12
8.0 SOURCE RISK LIMITS ..... 13
9.0 SPECIAL CONDITIONS ..... 13
10.0 COMPLIANCE DEMONSTRATION ..... 14
11.0 RECORDKEEPING REQUIREMENTS ..... 16
12.0 REPORTING REQUIREMENTS ..... 19
13.0 ADMINISTRATIVE REQUIREMENTS ..... 22
14.0 DEQ CONTACTS / ADDRESSES ..... 23
15.0 GENERAL CONDITIONS AND DISCLAIMERS ..... 24
16.0 EMISSION FACTORS ..... 25
17.0 PROCESS/PRODUCTION RECORDS ..... 27
18.0 ABBREVIATIONS, ACRONYMS, AND DEFINITIONS ..... 28
19.0 GENERAL PROVISIONS ..... 29

MONTROSE
AIR QUALITY SERVICES

# This is the Last Page of This Document

If you have any questions, please contact one of the following individuals by email or phone.


Name: Kristina Schafer
Title: PNW District Manager
Region: USA - Stack - Seattle - Operations
Email: kschafer@montrose-env.com
Phone: (253) 480-3801

Name: Sebastian Wolfendale
Title: Client Project Manager
Region: USA - Stack - Seattle - Operations
Email: sewolfendale@montrose-env.com
Phone: (503) 255-5050