Exhibit B

Project Description and Schedule

Nolin Hills Wind Power Project
~~February~~ November 2020

Prepared for

d/b/a Nolin Hills Wind, LLC

Prepared by

Tetra Tech, Inc.

This page intentionally left blank

Table of Contents

List of Tables

List of Figures

Acronyms and Abbreviations

AC	alternating current
APLIC	Avian Power Line Interaction Committee
Applicant	Nolin Hills Wind, LLC
ASC	Application for Site Certificate
BESS	battery energy storage system
BPA	Bonneville Power Administration
CFR	Code of Federal Regulations
DC	direct current
EFSC	Energy Facility Siting Council
FAA	Federal Aviation Administration
GE	General Electric
GSU	general step-up
HV	high voltage
kV	kilovolt
met tower	meteorological data collection tower
MW	megawatt
O&M	operations and maintenance
OAR	Oregon Administrative Rule
ORS	Oregon Revised Statute
Project	Nolin Hills Wind Power Project
SAT	single-axis tracker
SCADA	Supervisory Control and Data Acquisition
UEC	Umatilla Electric Cooperative
UPS	uninterruptible power supply

1.0 Description of Proposed Project – OAR 345-021-0010(1)(b)(A)(i)

Exhibit B was prepared to meet the submittal requirements in Oregon Administrative Rule (OAR) 345-021-0010(1)(b), which states:

OAR 345-021-0010(1)(b)

(b) Exhibit B. Information about the proposed ~~Project~~facility, construction schedule and temporary disturbances of the site, including:

(A) A description of the proposed energy ~~Project~~ facility, including as applicable:

(i) The nominal electric generating capacity and the average electrical generating capacity, as defined in ORS 469.300;

Nolin Hills Wind, LLC (the Applicant) proposes to construct the Nolin Hills Wind Power Project (Project), a wind and solar energy project with a nominal generating capacity of approximately ~~350~~ 600 megawatts (MW) (preliminarily 340 MW from wind and 260 MW from solar), ~~and up to 117 average MW of energy,~~ in Umatilla County, Oregon (see Figure C-1 in Exhibit C). Average electrical generating capacity would be approximately 373.3 MW (113.3 MW from wind generation plus 260 MW from solar generation, totaling 373.3 average MW). Given the increasing efficiency and energy output of wind and solar technologies, it is possible the nominal and average electrical generating capacity for the Project would be higher while staying within the component maximums and spatial footprint analyzed in this Application for Site Certificate (ASC). It is also possible the proportional distribution of solar and wind generation under the Project's anticipated maximum 600 MW total ultimately deployed differs from the preliminary suggestion of 340 MW from wind and 260 MW from solar, per above. Such variation would be driven by engineering optimization and/or offtake market trends, and it notably would also stay within the component maximums and spatial footprint analyzed in this ASC.

The Project's wind energy component comprises up to ~~116~~ 112 wind turbine generators, depending on the turbine model selected and the final layout during the micrositing process. ~~If larger turbines are selected, fewer turbines will likely be installed.~~ The solar array will include up to approximately 1,117,591 solar modules, depending on the final technology and layout selected. Power generated by the Project will be transmitted by 34.5-kilovolt (kV) electrical collector lines ~~that will extend up to approximately 99 miles total in length~~, located primarily underground with overhead segments where needed. The Applicant proposes to construct up to two on-site Project substations to increase the voltage from the 34.5-kV collection system to 230 kV. The Project will interconnect to the regional grid via either publicly owned and operated transmission lines to be constructed locally by the Umatilla Electric Cooperative (UEC), or a new 230-kV transmission line anticipated to be constructed, owned, and operated by the Applicant to the proposed Bonneville Power Administration (BPA) Stanfield Substation.

Other Project components include an up to 120-MW battery energy storage system (BESS), site access roads, one operations and maintenance (O&M) building, meteorological data collection towers (met towers), and temporary construction yards. These facilities are all described in greater detail in Section 7.0.

1.1 Definition of Site Boundary

The Site Boundary establishes the perimeter of the site, within which all Project facilities will be located. The Site Boundary encompasses approximately 48,~~077~~ 196 acres of private land near the town of Nolin in Umatilla County, Oregon.

The Applicant has established micrositing corridors within the Site Boundary. Micrositing corridors are the specific, continuous areas of land within the Site Boundary where the construction of facility components has been planned. The micrositing corridor is a minimum of 1,000 feet in width along turbine string corridors, and wider in some locations, up to 1,700 feet in width. In addition, the solar siting area encompasses approximately 1,896 acres to accommodate the solar array, BESS, and associated roads and electrical infrastructure. The width of the micrositing corridors around the site access roads and collector lines is a minimum of 300 feet in width. The micrositing corridor around the 230-kV transmission line is also approximately 300 feet in width for the majority of its length and up to 1,600 feet in width in selected greenfield areas, and will contain all 230-kV transmission line components and associated site access roads. Wider areas of the micrositing corridor will encompass the Project substations, met towers, the O&M Building, and construction yards. The micrositing corridor excludes areas, where appropriate, to avoid impacts to sensitive cultural, biological, or environmental resources, such as wetlands or Category 1 habitat. The total micrositing corridor includes approximately ~~13,868~~15,726 acres within the Site Boundary.~~-~~ A portion of the solar siting area overlaps the wind micrositing corridor where the northern Project substation, O&M Building, and central construction yard are located in the preliminary design (see Figures C-4 and C-5 in Exhibit C).

The micrositing corridors have been surveyed in accordance with Oregon Department of Energy requirements for the ~~Application for Site Certificate (~~ASC~~)~~, and impact calculations and analyses will be based on a worst-case, or most conservative, scenario customized for each resource under an Energy Facility Siting Council (EFSC) standard. The Applicant will demonstrate as part of the ASC that the proposed Project meets all applicable standards for a wind energy facility.

The Applicant anticipates that the Project will begin construction in ~~spring~~ 2021~~,~~ at the earliest, ~~and~~ pending issuance of a Site Certificate from EFSC, with commissioning completed and commercial operation targeted for the end of 2023~~2.~~. The Applicant will seek to achieve an earlier start to commercial operation if possible. The anticipated life of the Project is 30 years.

1.2 Turbine ~~Options~~Selection

~~To allow flexibility in the choice of wind turbines at the time of construction, t~~The Applicant has analyzed impacts using ~~two~~ a ~~different~~ representative turbine model with the maximum potential dimensions under consideration for the Project~~s~~, ~~while~~ and ~~limiting~~ limited the total maximum

~~generating capacity for wind to 350 MW~~number of turbines to 112. As noted earlier, the total nominal generating capacity of the wind turbines may be higher than the preliminary estimate of 340 MW due to technological advancements. This approach will allow the Applicant to select the most appropriate turbine model available at the time the turbines are acquired, so long as the turbines selected result in no greater impact than allowed for in the Site Certificate and satisfy all the ~~pre-construction~~ conditions of the Site Certificate. This flexibility is required because turbine manufacturers offer new turbine models with improved technology and retire older models approximately every one to two years.

~~Turbine Option 1 utilizes up to 58 Siemens-Gamesa 6.0-MW turbines. Turbine Option 2~~The representative turbine layout utilizes up to ~~116~~ 112 General Electric (GE) 3.03-MW turbines. ~~Analyzing impacts for two turbine types allows for the representation of a range of turbine technologies and associated impacts that are currently available or forecasted across all turbine vendors.~~ This~~ese two~~ turbine option~~s~~ defines the maximum number and provides boundaries on the size of wind turbines for the Project (see Section 2.1). The ultimate number of wind turbines, and the specific model and manufacturer used, will be determined near the time of construction. This~~ese~~ preliminary Project ~~options~~ layout ~~have~~ has involved significant engineering design work guiding the placement of turbines and supporting facilities while minimizing their impacts, and while representative of the final layout, ~~do~~ does not necessarily indicate the specific location for each turbine, the final turbine model, or the final location of all the supporting Project facilities. ~~For this reason, the analysis of the impacts of facility construction and operation assumes both turbine options could be implemented and focuses on the largest potential impact to each resource. The turbine type with the greatest potential impact may not be the same for each analysis.~~ The final layout will be determined prior to construction and will reflect additional survey data, final engineering design, and the Applicant's ongoing process of avoiding and minimizing impacts.

1.3 Solar Array and Battery Storage Options

The Applicant has evaluated impacts for the proposed solar array and BESS considering different technology options, while limiting the total maximum number of solar modules and maintaining the same maximum spatial area footprint. Within the maximum spatial area footprint and maximum component dimensions described and analyzed in this ASC, the nominal generating capacity could exceed the 260 MW noted earlier. This approach will allow the Applicant to select the most appropriate system for generating and storing solar energy available at the time all of the equipment is acquired, as well as optimal combination of wind and solar generation, so long as the system selected results in no greater impact than allowed for in the Site Certificate and satisfies all conditions of the Site Certificate. Similar to turbine technology, solar and BESS systems are continuously being modified by manufacturers and improving overall performance. Consequently, the Applicant is not able to commit to specific equipment at this time, although general operating parameters will result in no greater impacts than those described in this ASC.

In the analysis of potential Project impacts, the "maximum" scenario for the solar array and BESS is assumed to provide the largest potential impact to each resource. However, given the spatial

requirements for different components of the solar array and BESS, the "maximum" scenario is conservative in that all components could not be maximized at the same time within the same permanent footprint (see Exhibit C for disturbance calculations). For example, the maximum number of solar modules, 1,117,591, would not be sited in combination with a centrally located BESS (versus smaller BESS units distributed throughout the array). The solar array and BESS options are described in detail in Sections 2.6 and 7.2, respectively. The final layout will be determined prior to construction to reflect final engineering design and the Applicant's ongoing process of avoiding and minimizing impact, as noted above.

In analyzing impacts, it is assumed that the solar array would be constructed at its maximum level of impact in addition to the maximum number of wind turbines as described above. As noted above, this is a conservative approach designed to retain flexibility. During final design, the Applicant will determine the optimal configuration of solar and wind energy generation along with storage such that final resource impacts will not be greater than those shown in this application.

~~1.3~~1.4 Grid Interconnection

The Applicant anticipates that the Project will connect to the BPA transmission system via new and modified/upgraded UEC transmission lines from the northern Project substation to the existing UEC Cottonwood Substation, or via a new overhead 230-kV transmission line to the proposed BPA Stanfield Substation north of the Umatilla River. From the Cottonwood Substation, an existing UEC 230-kV transmission line with capacity for the additional power generated by the Project would carry that power north to BPA's McNary Substation. ~~The UEC Cottonwood route is currently considered the primary option, with the BPA Stanfield route as a backup option.~~ The final decision regarding which route will be used will be made by the Applicant based on the final project construction schedule, BPA and UEC system requirements, anticipated costs, and other factors such as transmission agreements. Both transmission line routes are shown on Figure~~s~~ C-4 ~~and C-5~~ in Exhibit C.

If the UEC Cottonwood route is selected, that line would be owned and operated by UEC. Upgrades and additional infrastructure to their network are expected to be handled by UEC ~~and will be authorized either through local Umatilla County permitting or through EFSC review (to be determined prior to submittal of the Final ASC)~~. ~~If maintained for EFSC authorization~~However, as a potential supporting facility for the Project, the UEC transmission line ~~will be~~is subject to EFSC review pursuant to applicable EFSC standards. ~~This Preliminary ASC has conservatively included the UEC transmission line as part of the Project and addressed its potential impacts in the applicable exhibits per EFSC standards. Since UEC is concurrently proceeding with County permitting for the transmission line, the Final ASC will be updated as needed pending completion of the local process.~~ If the BPA Stanfield route is used, the necessary new transmission line is anticipated to be constructed, owned, and operated by the Applicant. The impacts of both the UEC route and the BPA Stanfield route are included as part of this Project, with evaluation pursuant to applicable EFSC standards. Both 230-kV transmission line routes are described further in Section 7.1.2 of this exhibit.

2.0 Major Components, Structures, and Systems – OAR 345-021-0010(1)(b)(A)(ii)

> *(ii) Major components, structures and systems, including a description of the size, type and configuration of equipment used to generate electricity and useful thermal energy;*

Major components, structures, and systems associated with the proposed Project are summarized below:

- Wind turbine generators, including the nacelle, blades, rotor, and tower;
- Turbine foundations; ~~and~~
- Generator step-up (GSU) transformers and transformer foundations, and associated switchgear; and
- Solar array, including the modules, racking or tracker system, posts, cabling, and inverters and transformers.

As noted earlier, ~~T~~the analysis presented in this ASC is a worst-case scenario with respect to each impact analyzed, with the maximum turbine dimensions and layout as well as ~~. For any given impact, the turbine model that causes the greatest impact to the resource under consideration has been evaluated and presented in the respective exhibit. For example, the scenic resource analysis focuses on the tallest turbine model and, alternatively, the soil impact analysis applies the layout with the greatest number of turbines. The~~ maximum solar buildout ~~is~~ assumed for all scenarios. In this manner, ~~this ASC~~the Applicant will ensure that the Project meets all EFSC standards for a Site Certificate and will ~~allow the Applicant~~retain flexibility in micrositing turbines and solar components within the Site Boundary for optimal configuration of solar and wind energy generation along with storage such that final resource impacts will not be greater than those shown in this ASC.

2.1 Turbine Model ~~Options~~

A wind turbine generator consists of a three-bladed rotor, attached to a nacelle that is mounted on a tubular tower. In operating mode, the rotor is located on the upwind side of the tower. The Applicant is considering wind turbines ~~models~~ with specifications that have the ~~following~~ maximum ~~ranges~~values as shown in Table B-1. ~~:~~

- ~~Nominal power ranging from 3.03 MW to 6.0 MW;~~
- ~~Rotor diameter ranging from 459 to 558 feet; and~~
- ~~Tower heights ranging from 266 to 377 feet. The combined tower and rotor height (maximum blade tip height) ranges from 496 feet to 656 feet.~~

~~The potential Project impacts are based on a range depicted by two representative wind turbine models: Option 1, the Siemens-Gamesa 6.0 MW turbine; and Option 2, the GE 3.03 MW turbine. Table B-1 shows the key characteristics for each turbine option. The use of two turbine options defines a representative range of turbine technical specifications and maximum impact parameters for the Project.~~ The Project's total nominal generating capacity from wind will be ~~350~~ approximately 340 MW; however, as noted earlier, actual generating capacity may vary given the technology available at the time of construction and final combination of wind and solar energy components for the Project. Figure~~s~~ C-4 ~~and C-5 in~~ Exhibit C shows representative turbine locations for ~~Option 1 and Option 2, respectively~~the Project.

Table B-1. Wind Turbine Model Representative ~~Option~~ Characteristics

Turbine Model	Generating Capacity	Tower Height (feet)	Rotor Diameter (feet)	Total Maximum Blade Tip Height (feet)	Minimum Blade Tip Clearance (feet)	Total Maximum Number of Turbines
~~Option 1 (Siemens-Gamesa)~~	~~6.0 MW~~	~~377~~	~~558~~	~~656~~	~~98~~	~~58~~
~~Option 2 (~~GE~~)~~	3.03 MW	266	459	496	36.5	~~116~~112

2.2 Configuration

Turbines will be spaced as required by manufacturers to minimize the turbines' turbulence (or wake effect) on downwind turbines and to optimize energy output. Turbines will be connected via electrical collection and fiber-optic communication lines, feeding turbine output into one of the two on-site substations. The collection and communications lines will be placed primarily underground, but may include some overhead segments where avoidance of subsurface risk and sensitive features is necessary, where underground cabling is not feasible, or where overhead segments are otherwise determined appropriate to connect to the Project substations. At the on-site substations, power will then be "stepped up" and fed into the proposed 230-kV transmission line. Aviation lighting will be mounted on turbines per Federal Aviation Administration (FAA) requirements.

2.3 Components and Specifications

Wind turbine generators are composed of three major components: the nacelle, the blades, and the tower (see Figure B-1). The nacelle sits atop the turbine tower. It houses the gearbox, generator, and control systems for the turbine, and is where the turbine blades attach to the hub. Access to the nacelle is via a ladder inside the turbine tower, which is accessible by a locked doorway at the base of the tower. The nacelle is mounted to the turbine tower on a geared plate that allows the turbine to rotate horizontally, orienting the nacelle such that the rotor faces into the wind to maximize its capture of the available wind resource. The roof of the nacelle is designed to be removable or opened from within to accommodate major maintenance activities such as the replacement of a

gearbox. The floor of the nacelle acts as a pan to contain any potential spills of gearbox or hydraulic fluid.

Turbine blades are attached to the rotor hub, which is mounted to the front of the nacelle. A rotor blade is composed of laminated fiberglass and carbon fiber, and typically is constructed as a single piece (although it is possible that blades may be fabricated in two pieces for ease of transport and assembly at the Project). The maximum rotor diameter~~s~~ under consideration by the Applicant ~~are~~ is listed in Table B-1.

When operating, the rotor turns at a rate between 4.9 and 12.5 revolutions per minute. The area covered by the rotating blades is referred to as the rotor swept area. The turbine begins generating electricity at wind speeds of approximately 7 to 9 miles per hour, although this wind speed varies by turbine size and manufacturer. At wind speeds greater than about 55 miles per hour, the turbine shuts down; the blades are feathered so they do not catch the wind, brakes are applied to slow and stop the rotor, and once stopped, the rotor may be locked to prevent damage to the turbine from excessive wind speeds.

A turbine tower is a cylindrical steel structure tapered from the base to the top, on top of which is mounted the nacelle. Tower heights vary by turbine model and manufacturer. ~~Specifications for~~for the maximum height~~s~~ under consideration for use at the Project appears in Table B-1, with the potential for taller towers for other turbine types that have a smaller rotor diameter. A self-diagnosing controller is located inside the base of the tower. The interior of a tower is accessible by a locked door above ground level via a short stairway, and the tower may feature either an internal ladder or elevator lift system providing protected access to the nacelle. Towers will be fabricated in sections and assembled on-site. A typical turbine tower will be approximately 15 feet across at the base, tapering to 12 to 14 feet across at the nacelle. Each tower will arrive at the Project in three to five sections, to be assembled on-site.

The turbines will be marked and lighted according to FAA standards (FAA Advisory Circular 70/7460-1L), but no other lighting will be used on the turbines. FAA standards call for painting the turbines and towers white or light gray, making them visible to pilots from the air. Flashing red aviation lighting will be mounted atop turbines. ~~For turbines greater than 499 feet in height, the FAA requires all turbines to have two lights placed on the nacelle (one on each side).~~ Under current FAA standards, all of the lights will be programmed to flash in unison, allowing the entire Project to be perceived as a single unit by pilots flying at night. The specific location, operation, and type of aviation lighting system will be determined in consultation with FAA prior to commencing operation of the Project.

2.4 Turbine Foundations

Each turbine will be secured to a foundation. Typical wind turbine foundations are reinforced concrete, spread-footing, or plate foundations. Other foundation types such as pile or caisson-type foundations may be considered based on site-specific soil conditions. The actual foundation type and design for each tower will be determined after on-site geotechnical studies; however, for the purposes of the ASC, the Applicant assumes that typical spread-footing or bedrock foundations will be

used (Figures B-2 and B-3). Typical spread-foot foundations reach a depth of 10 feet below grade and can be as large as 80 to 85 feet in diameter. The center of the foundation will be approximately 6 feet thick, tapering to approximately 2 feet thick at the outer edges. An 18-foot-diameter pedestal, upon which the turbine tower is mounted, projects from the center of the footing to above ground level.

Where indicated by site-specific geotechnical investigation, bedrock foundations may be installed. This involves stripping the topsoil and subsoil to the top of the bedrock. Mechanical methods are used to remove bedrock to the design depth of the turbine foundation. Holes are drilled to the rock anchor bolt design depth. The concrete pad is then installed and the rock anchor bolts are placed to secure the concrete pad foundation.

Construction of each turbine will require the temporary disturbance of an area around the foundation to accommodate foundation excavation and soil storage, and to provide a stable area for the staging and assembly of turbine and tower components and the operation of construction cranes and other heavy equipment (Figure B-4). This temporary disturbance area is approximated by a 300-foot radius (600-foot diameter) circle around the turbine, about 6.5 acres in size. Permanent disturbance of the foundations is approximated by a 4-foot radius (82-foot-diameter) circle, or about 0.12 acres in size. Following erection of the turbines, the construction yards will be reclaimed through regrading to pre-construction contours, restoration of topsoil as needed, soil decompaction if necessary, and seeding or planting to restore habitat, as appropriate. The Applicant will coordinate with landowners for final restoration requirements in agricultural areas.

2.5 Generator Step-Up Transformer and Transformer Foundations

A GSU transformer is installed at each turbine to step up the output voltage from the turbines' 690 volts to the voltage of the collector system (34.5 kV). Some turbine models include a GSU inside the turbine. If the output of the GSU is less than 34.5 kV, or a transformer is not included in the turbine, then a pad-mount transformer is required to step up the voltage to match the collector system. Typically, the pad-mount transformer is a rectangular box with a footprint approximately 8 feet by 11 feet located adjacent to the base of the turbine tower (Figure B-4). Support for the transformer will be provided by a concrete pad or foundation 2 to 6 feet thick. The thickness and extent of the pad mount transformer foundation is dependent upon soil conditions at the site, and will not be determined until after the geotechnical study is conducted (see Exhibit H for information related to site-specific geotechnical study).

2.6 Solar Array

The major components of the proposed solar energy generation system are solar modules, racking systems, posts, and related electrical equipment (inverters and transformers). These components are combined to form a solar array. The layout of the solar array can vary depending on project size, technology, topography, and other constraints. Therefore, as noted earlier, the Applicant seeks to permit a range of technology to preserve design flexibility. The solar modules and associated equipment, as well as the precise layout of the solar array, have not yet been finalized. Because technology is changing rapidly, this ASC analyzes impacts associated with the largest anticipated

solar siting area footprint, or approximately 1,896 acres (see Exhibit C). The area would be enclosed by an 8-foot-tall security fence, with no barbed wire. For the purposes of analysis, the maximum fenced area depicted encompasses the BESS, northern Project substation, the O&M Building, and central construction yard in addition to the solar array (see Figure C-5 in Exhibit C). However, within the overall footprint, actual fencing of individual components (i.e., BESS, substation, etc.) may be different than shown.

During final design, the Applicant will consider all micrositing factors and solar technology available at that time to design the most efficient and effective solar array layout. However, the actual solar array equipment and layout selected will not exceed the impacts analyzed. Therefore, the following description of major components is based on the best available design information at this time and largest anticipated footprint, but may not reflect the final design.

2.6.1 Solar Modules

Most solar photovoltaic modules use mono- or poly-crystalline cells to generate electricity by converting sunlight into direct current (DC) electrical energy. The electrical generation from a single module varies by module size and the number of cells per module. The crystalline cells are contained within antireflective glass panels and a metal frame, and linked together with factory-installed wire connectors. The modules will be connected in series to form long rows, or "strings," spaced approximately 12 to 25 feet apart (from the edge of the solar modules). The strings of modules are then connected via combiners, cables, and switchboards. The configuration of multiple strings (also referred to as an "array") can vary depending on the equipment type and topography. Other technology options, such as thin-film solar modules that use layers of various photovoltaic material, may apply alternative methods of energy generation, but would be set up similarly.

Exhibit C, Figure C-5 depicts a typical solar layout developed for purposes of analyzing maximum potential impacts, using 1,117,591 modules in strings of approximately 27 modules per string for 41,393 strings. Figure B-5 depicts an example solar module design, represented by LONGi Solar's Bifacial PERC Module (LR4-72HBD-450). The actual number of modules will vary depending on the module technology, energy output, spacing, mounting equipment (tracker systems), and other design criteria, which are subject to change during final design. Impact assumptions are based on this use of 1,117,591 modules for the solar array and that for purposes of analysis all areas within the fenced area will be permanently impacted by construction of the facility. See Exhibit C for temporary and permanent impact calculations.

2.6.2 Racking Systems

Strings of solar modules will be mounted on either a single-axis tracker (SAT) or fixed-tilt racking system. Figures B-6 and B-7 show example specifications and photographic illustrations of SAT and fixed--tilt systems, respectively. An SAT system optimizes electricity production by rotating the solar modules to follow the path of the sun throughout the day. A fixed-tilt system relies on its angle and orientation to optimize solar exposure, and can have advantages in foundation construction.

The length of each string may vary by topography and the number of modules that the racking system can hold, and the final number of strings and modules will depend on the racking system selected. The depicted layout in Figure C-5 is a fixed-tilt system. For either the SAT or fixed-tilt option, the maximum height (as measured from the top edge of the module) will be up to 18 feet above ground. The racking system, and associated posts, will be specifically designed to withstand wind, snow, and seismic loads anticipated at the site.

2.6.3 Posts

Each rack will be supported by multiple steel posts, which could be round hollow posts, or pile-type posts (i.e., H-pile, C-pile, S-pile) driven into the ground, ground screws, helical piles, or posts or piles that are set in concrete or grouted into a hole drilled into rock, if subsurface conditions are such. Post depth may vary depending on soil conditions, but the posts are typically installed 6 to 10 feet below the surface and protrude approximately 4 to 5 feet above grade. Posts at the end of tracker rows are usually installed to greater depth to withstand wind uplift. In some soil conditions, concrete backfill is required for each post. For the purposes of this ASC, the Applicant assumes that up to 83,080 posts will be installed and that all posts will use concrete foundations. The actual number of posts and foundation method may vary depending on the final racking system, topography, height of the solar modules, and site-specific geological conditions. Post locations will be determined by the final layout of the racking system and geotechnical investigations of the solar siting area.

2.6.4 Cabling

The solar modules produce DC electricity. Cables collect and aggregate the DC before it is converted to alternating current (AC) and sent to the Project substation. Approximately 2 miles total of low-voltage cabling will connect the solar modules of each tracker string in series, and likely combine two to three strings to a single combiner box; however, for purposes of analysis, the ASC assumes one combiner box per string. Cabling from multiple combiner boxes will connect to a single inverter, which will convert the DC to AC and connect to the buried collection system. For example, the cabling system for the site plan shown on Exhibit C, Figure C-5 connects approximately 27 modules in series per string with a single pad-mounted combiner box per string for a total of 41,393 combiner boxes. Cabling can be mounted to the racking system, placed in cable trays, or buried. The buried cable associated with the solar array will be included in the estimated total permanent disturbance area associated with the solar array (i.e., no separate temporary impacts are calculated for buried cable inside the solar siting area).

2.6.5 Inverters and Transformers

The DC collected from the solar modules via combiner boxes must be converted into AC before connecting to the northern substation. Inverters serve the function of converting DC power supply to an AC power supply in accordance with electrical regulatory requirements. For example, Figure

C-5 in Exhibit C depicts a solar site plan with 98 inverter/transformer stations to convert the DC power from the modules to AC. Each station would include a 4,400-kilowatt inverter that consists of five integrated 880-watt individual units, for a total of 490 units. Figure B-8 depicts an example of an inverter/transformer station. The final number of inverters will vary depending on the actual generation output of the solar array, which is approximated at 260 MW in this application, but could be higher with the maximum equipment and spatial footprint analyzed. While Figure C-5 depicts inverters co-located with transformers on the same concrete slab, string inverters may also be used. The inverter specification will comply with the applicable requirements of the National Electrical Code and Institute of Electrical and Electronics Engineers standards.

The AC from the inverters will be routed to transformers that will increase the output voltage from the inverter (660 to 1,500 volts per individual unit) to the desired substation feed voltage (34.5 kV). The transformers could be co-located with the inverters or centrally located. As noted above, for the purposes of analysis the solar array layout on Figure C-5 includes 98 co-located inverter/transformer stations, with one transformer per station. Transformers at these locations will step up the voltage from the inverters.

The collector lines that connect the transformers to the northern substation are described in Section 7.1.1 as part of the overall Project electrical collection system.

3.0 Site Plan and General Arrangement – OAR 345-021-0010(1)(b)(A)(iii)

(iii) A site plan and general arrangement of buildings, equipment and structures.

A site plan is included in Exhibit C, Figures C-4 and C-5.

4.0 Fuel and Chemical Storage Facilities – OAR 345-021-0010(1)(b)(A)(iv)

(iv) Fuel and chemical storage facilities, including structures and systems for spill containment.

During construction of the Project, small quantities of chemical materials may be utilized in the temporary construction yards (i.e., central and distributed staging areas), and stored at the O&M Building or in an oil storage shed. Such materials may include cleaners, insecticides or herbicides, paint, or solvents. None will be present in substantial, reportable quantities; the amounts present (if any) will be no greater than household quantities.

Fuels will be the only hazardous material that may be stored in substantial quantities on-site during construction. The Applicant anticipates that up to approximately 500 gallons of diesel fuel and 200 gallons of gasoline may be kept on-site for the refueling of construction equipment. These both will

be stored in the temporary construction yards. Most fuel will be delivered to the construction yards by a licensed specialized tanker vehicle on an as-needed basis. There will be no substantial quantities of lubricating oils, hydraulic fluid for construction equipment, or other hazardous materials maintained on-site during construction. Lubricating oil and hydraulic fluids for construction equipment will be brought in on an as-needed basis for equipment maintenance by a licensed contractor using a specialized vehicle, and waste oils removed by the same maintenance contractor. Hydraulic oils for the turbines and dielectric oils for the transformers will similarly arrive on an as-needed basis and transferred into the receiving components; none will be stored on-site.

During operations, chemical storage will include up to ~~10~~ two lead-acid batteries in the control room within the O&M Building as a backup uninterruptible power supply (UPS) system. Each battery ~~weighs 56 kilograms and~~ contains sulfuric acid within its maintenance-free sealed leakproof exterior. Sulfuric acid is considered an extremely hazardous material by the U.S. Environmental Protection Agency under 40 Code of Federal Regulations (CFR) §355. As required by regulation, secondary containment will be employed, and the Applicant will include sulfuric acid as part of its annual Emergency Planning and Community Right-to-Know Act report to local emergency responders. The batteries will be replaced at least every 5 years, if not earlier as indicated by UPS system controls. Replacement of batteries will be handled by a qualified contractor and adhere to applicable regulations for transport and disposal, including but not limited to 49 CFR §173.159.

In addition, up to sixty 300-amp hour lead-acid batteries in sealed containers would be held in a wall rack located inside both the northern and southern substation power control buildings, for a total of up to 120 lead-acid batteries. These batteries would be used as the main source of station service to operate all substation equipment. The final number and size of batteries will be determined during final design.

There will be no substantial quantities of fuels or oils on-site during operations, except as contained in qualified oil-filled equipment, including the turbine gearboxes and substation transformers. Lubricating oil (5 gallons per turbine per year) will be brought in on an as-needed basis for periodic oil changes in the turbine gearboxes by a maintenance contractor using a specialized vehicle, and waste oils will be removed in the same way. Small quantities of gear oil will likely be maintained on-site for occasional top-offs; it is anticipated that less than 10 gallons will be stored in the O&M Building at any given time. A full gear oil change will be done ~~as-needed~~as needed by a specialized contractor and used oils will be removed for recycling. Small quantities (2 to 3 gallons) of pesticides or herbicides, paint, solvents, or cleaners may also be kept on-site; when not in use these will be stored in the O&M Building. Sorbent materials will be maintained on-site to capture any small spills that may occur.

Secondary containment is optional for the transformers and for the turbine gearboxes, as these are classified as qualified oil-filled operational equipment under the Environmental Protection Agency's Amended Spill Prevention, Control, and Countermeasure Rule issued in 2006 (EPA-550-F-06-008). Per this amended rule, instead of providing secondary containment for qualified oil-filled

operational equipment, an owner or operator may prepare an oil spill contingency plan and a written commitment of manpower, equipment, and materials to quickly control and remove discharged oil; the plan must include an inspection or monitoring program for the equipment to detect a failure and/or discharge. Alternatively, the transformers may be installed on foundations that provide secondary containment, or sorbent materials may be kept on-hand to capture minor leaks. The Applicant plans to install secondary containment for the substation and solar array transformers, and the specific design will be determined prior to construction of the substations and solar array. The nacelles and turbine foundation will effectively function as secondary containment for the turbine gearboxes, such that no additional secondary containment systems are needed for the turbines.

While not considered an extremely hazardous material, electrolyte solution would be contained within the BESS. For the lithium-ion system, the risk of leaking is very low because battery cells are hermetically sealed. Electrolyte can only escape (as vapor) in the unlikely case that a battery cell ruptures, though it would be contained in the BESS steel container. Flow batteries have a higher, though still overall low risk of leakage, as they store greater volumes of electrolyte in tanks and have pumps, piping, valves, pump seals, and so on that are common to any fluid pumping system. As such, secondary containment would be installed for a flow battery BESS. See Section 7.2 for additional description and discussion of the BESS options.

As further described in Exhibit I, the Applicant will prepare and maintain a Spill Prevention, Control, and Countermeasures Plan (SPCC Plan) to outline preventative measures and practices to reduce the likelihood of an accidental spill, and to expedite the response to and remediation of a spill should one occur.

5.0 Fire Prevention and Control – OAR 345-021-0010(1)(b)(A)(v)

(v) Equipment and systems for fire prevention and control.

The greatest risk of fire will occur during construction of the Project, when welding and metal cutting for foundation rebar frames will take place, and vehicles and construction equipment may be used in areas of tall, dry grass. To prevent fires from occurring, the construction contractor will implement a number of systems and procedures. These will include requirements to conduct welding or metal cutting only in areas cleared of vegetation, and to keep emergency firefighting equipment on-site when potentially hazardous operations are taking place. Construction workers will be prohibited from parking vehicles in areas of tall dry vegetation, to prevent fires caused by contact with hot mufflers or catalytic converters.

The risk of fire during the operational phase of the Project is low. While incidents of wind turbine fires have occurred, these incidents are rare, and have generally been traceable to poor maintenance or electrical malfunction. The risk of turbine fires will be minimized through proper maintenance of the turbine and its critical mechanical and electrical components. Lightning protection systems are built

into the turbine blades and tower to electrically ground the entire structure and to eliminate the potential for lightning-caused fires.

The solar array will have shielded electrical cabling, as required by applicable code, to prevent electrical fires. Vegetation within the solar siting area will be managed as needed to reduce fuels for fire. All electrical equipment will meet National Electrical Code and Institute of Electrical and Electronics Engineers standards and will not pose a significant fire risk. With proper maintenance and safety checks, the electrical collection system and 230-kV transmission line are unlikely to cause a fire.

Facility roads will be sufficiently sized for emergency vehicle access in accordance with 2019 Oregon Fire Code requirements, including Section 503 and Appendix D - Fire Apparatus Access Roads. Specifically, roads will be 16 to 20 feet wide with an internal turning radius of 28 feet and less than 10 percent grade to provide access to emergency vehicles. The areas immediately around the O&M Building, Project substations, and BESS will be graveled, with no vegetation present. See Exhibit U for additional discussion of Project fire prevention measures and coordination with local emergency responders.

Battery Energy Storage System: The Project may use either lithium-ion or flow batteries to store up to 120 MW of the energy generated by the solar array. Section 7.2 provides a detailed description of the BESS options. The following paragraphs summarize the information pertinent to fire prevention and control for the BESS.

The chemicals used in lithium-ion batteries are generally nontoxic but do present a flammability hazard. Lithium-ion batteries are susceptible to overheating and typically require cooling systems dedicated to each BESS enclosure, especially at the utility scale (LAZARD 2016). The gas released by an overheating lithium-ion cell is mainly carbon dioxide. The electrolyte solution, usually consisting of ethylene or propylene, is not flammable but may also vaporize and vent if the cell overheats (Battery University 2018).

The Applicant will implement the following fire prevention and control methods to minimize fire and safety risks if lithium-ion batteries are used for the BESS:

- The batteries will be stored in completely contained, leak-proof modules.
- Transportation of lithium-ion batteries is subject to 49 CFR 173.185 – Department of Transportation Pipeline and Hazardous Material Administration. This regulation contains requirements for prevention of a dangerous evolution of heat; prevention of short circuits; prevention of damage to the terminals; and prevention of batteries coming into contact with other batteries or conductive materials. Adherence to the requirements and regulations, personnel training, safe interim storage, and segregation from other potential waste streams will minimize any public hazard related to transport, use, or disposal of batteries.
- The Applicant will employ the following design practices:
    - Use of lithium iron phosphate battery chemistry that does not release oxygen when it decomposes due to temperature;

- Employment of an advanced and proven battery management system;
- Qualification testing of battery systems in accordance with UL 9540A (UL 2018);
- Installation of fire sensors, alarms, and clean agent-based fire extinguishing systems in every battery container (e.g., FM200, Novec 1230);
- Installation of deflagration venting and/or sacrificial deflagration panels per National Fire Protection Association standards 68 and 69 (NFPA 2020);
- Installation of remote power disconnect switches; and
- Clear and visible signs to identify remote power disconnect switches.

Flow batteries do not present a flammability hazard and a low to zero risk of explosion, and therefore do not require the complex cooling systems that lithium-ion batteries typically require (LAZARD 2016). Associated power conversion equipment (e.g., power stack, inverter, transformers, and other electrical equipment) carry the same risk as other power generation equipment and will be installed and maintained accordingly.

6.0 Sections Not Applicable to the Proposed Project – OAR 345-021-0010(1)(b)(A)(vi)(vii)(viii)

(vi) For thermal power plants:

(I) A discussion of the source, quantity and availability of all fuels proposed to be used in the ~~Project~~ facility to generate electricity or useful thermal energy.

(II) Process flow, including power cycle and steam cycle diagrams to describe the energy flows within the system.

(III) Equipment and systems for disposal of waste heat.

(IV) The fuel chargeable to power heat rate.

(vii) For surface facilities related to underground gas storage, estimated daily injection and withdrawal rates, horsepower compression required to operate at design injection or withdrawal rates, operating pressure range and fuel type of compressors.

(viii) For facilities to store liquefied natural gas, the volume, maximum pressure, liquefication and gasification capacity in thousand cubic feet per hour.

~~Wind turbines do not generate waste water or solid waste during operation. Small quantities of waste water and solid waste are generated by the O&M Building, the details of which are covered in Exhibit V.~~ The Project is not a thermal power plant. The Project will generate wind and solar power; no waste heat will be generated. The Project does not involve underground gas storage. The Project does not propose the storage of liquefied natural gas. Therefore, this rule is not applicable.

7.0 Major Supporting Facilities – OAR 345-021-0010(1)(b)(B)

(B) A description of major components, structures and systems of each related or supporting ~~Project~~facility;

Related or supporting facilities consist of the 34.5-kV electrical collector lines, up to two on-site Project substations, a 230-kV transmission line, an up to 120-MW BESS, communication and Supervisory Control and Data Acquisition (SCADA) systems, an O&M B~~b~~uilding, met towers, access roads, and additional construction areas such as temporary staging areas and one or more concrete batch plants.

7.1 Electrical Collection System

The Project's collection system carries power generated by the Project's turbines and solar array at 34.5 kV. Power will be initially generated at 690 volts by the Project's turbines, then stepped up to 34.5 kV through the nacelle-mounted or pad mount transformers and conducted onto the 34.5-kV electrical collector lines. As noted earlier, power from the solar array will be stepped up from approximately 660-1,500 volts to 34.5-kV through distributed transformers and conducted onto the collector lines. The collector lines will then carry the power to one of the two on-site Project substations (the solar array will connect to the adjacent northern substation), in which the voltage will be stepped up from 34.5 kV to 230 kV. Power will be transmitted from the southern substation via a new overhead 230-kV transmission line to the northern substation. From the northern substation, the Project will either directly connect to the regional grid via UEC transmission lines that will be constructed, owned, and operated by UEC, or the Applicant will construct a new 230-kV transmission line to the proposed BPA Stanfield Substation.

7.1.1 Collector Lines

A step-up transformer is required at each turbine and up to 98 step-up transformers are required within the solar array to increase the generator output voltage to equal the collector system voltage (see Section 2.5 and Section 2.6.5). Electrical connections will be made at the switchgear inside the turbine tower before connecting to the transformer, then from the transformer to the collector lines. The 34.5-kV collector lines will consist of three wires, or phases; each cable will be an insulated, stranded metal conductor in a size range of 1/0 – 4/0 American wire gauge, nearly 3 inches in diameter.

The 34.5-kV collector lines will typically run in trenches no less than 3 feet deep in tilled ground installed below grade, with junction splice boxes positioned intermittently along the lines for maintenance access.

It is possible that some of the collector lines will need to be installed on above-ground overhead structures in situations where a buried cable would be infeasible, such as for long "home run" stretches, and at stream or canyon crossings. In such instances, overhead collector lines will be supported by a wooden structure. Each support pole will be buried up to approximately 12 feet in

the ground, and will extend to a height of up to approximately 100 feet above ground, depending on the terrain. The structures will be spaced approximately 150 to 300 feet apart, depending on specific site conditions.

The total length -of underground collector line construction trenches[1]~~s~~ connecting the wind energy transformers to the Project substations will be approximately ~~59 to 90~~ 89 miles ~~for turbine Options 1 and 2, respectively~~ (up to 239 miles of conductor cable); overhead collector lines will total an estimated ~~15.6 miles for Option 1 and~~ 9.1 miles ~~for Option 2~~. Within the solar array, the length of underground collector line construction will total up to approximately 55 miles (up to 144 miles of conductor cable), with up to 10 percent of the line constructed overhead.

For the purposes of the ASC, the Applicant assumes a temporary impact corridor approximately 35 feet wide for the buried and overhead collector lines outside of the solar siting area. There will be permanent impacts only in the locations of the support poles for the overhead collector lines. Aside from the pole footprints, there will be no permanent impacts associated with the collector line corridor for aboveground segments. Temporary impacts from collector line construction will be restored and revegetated following construction. Exhibit C presents the temporary and permanent impacts of the collector lines for each turbine option; for the solar array, the collector lines are included in the total solar siting area permanent footprint, and no separate temporary impact is expected.

7.1.2 Transmission Lines

A single circuit 230-kV transmission line supported by H-frame or monopole structures (or other form as needed for specialized locations) will run approximately 6.8 miles between the two Project substations (Figure~~s~~ C-4 ~~and C-5~~). The 230-kV Project substation connector line will be designed to maintain a minimum conductor-to-ground clearance of 25 feet (minimum 35 feet over national highways; varies with location per safety codes) and the structures will be typically 100 to 140 feet tall and spaced approximately 600 feet apart on average depending on the terrain. The 230-kV transmission line will be designed following Avian Power Line Interaction Committee (APLIC; 2006) recommendations to prevent electrocution of birds. APLIC-recommended measures are intended to protect raptors, cranes, and other large birds from accidental electrocution and are sufficient to protect even the largest birds that may try to roost on the Project 230-kV transmission line. The engineering options for the 230-kV transmission line structures are discussed in detail in Exhibit AA, including example drawings. Based on pre-submittal design work and consultation with the Oregon Department of Fish and Wildlife, the transmission line route between substations was modified to avoid potential impacts to Category 1 Washington ground squirrel habitat.

In addition to the Project substation connector, the Project will require construction of a 230-kV transmission line that ties into the regional electric grid and follows one of the two routes described in Section 1.4~~3~~ (see Figure~~s~~ C-4 ~~and C-5~~ in Exhibit C). ~~Under~~ Following the ~~current primary option~~

[1] As multiple lines are laid together, the total length of trenches is less than the length of underground 34.5-kV conductor cable buried.

~~being considered, the~~ UEC Cottonwood route, the Project will tie into the regional electric grid via a 230-kV transmission line emanating from the proposed northern Project substation and extending ~~approximately 17.2 miles~~ to the existing UEC ~~Butter Creek~~ Cottonwood Substation. The total length of the Cottonwood route, including both the new and upgraded segments, will be approximately ~~24.9~~25.3 miles, constructed in segments as follows:

- From the northern Project substation to the corner of White House Road and County Road 1348 (labeled on Figure C.4-11 in Exhibit C), the UEC Cottonwood route will be approximately 8.4 miles of new transmission corridor and construction.
- From the corner of White House Road and County Road 1348 to the UEC Butter Creek Substation, an approximately 9.6-mile portion of the UEC Cottonwood route would replace an existing 12.47-kV distribution line with the proposed 230-kV transmission line with 12.47-kV underbuilt distribution.
- Continuing from the UEC Butter Creek Substation, the route ~~from which~~will follow an existing 115-kV UEC transmission line, to be upgraded to incorporate a 230-kV line and ~~, will~~ carry power generated by the Project approximately another 7.3~~7~~ miles north to the UEC Cottonwood Substation. The ~~upgrade~~ line replacement will consist of replacing the existing support poles with new structures that can support restringing the existing 115-kV transmission line and adding a 230-kV transmission line (double-circuit), with 12.47-kV underbuilt distribution.

After the Cottonwood Substation, power from the Project will be transmitted over an existing 230-kV line north to the BPA McNary Substation. ~~The UEC lines will be constructed by UEC and may be permitted locally through Umatilla County; however, as described earlier, they are conservatively included in this Preliminary ASC to analyze the maximum potential Project impacts. Once a final decision is made by UEC regarding the permitting process, the Applicant will update the Final ASC accordingly.~~

Alternatively, if the BPA Stanfield route is ~~ultimately~~ selected by the Applicant, a new overhead 230-kV transmission line will extend approximately 4.~~1~~5 miles from the proposed northern Project substation to the proposed BPA Stanfield Substation. The route will be designed as described above to follow APLIC recommendations, and engineering options for the structures are the same as noted above. The Stanfield route leads north following County Road 1350 from the northern Project substation, then turns northwest parallel to an existing BPA transmission line (to be sited outside of BPA's existing right-of-way; see Section 10.2). Approximately 1.5 miles upriver from the community of Nolin, the transmission line will span the Umatilla River and continue in parallel with the existing transmission line to the Stanfield Substation. This route is approximately~~. 4.1~~5 miles total in length, of which approximately 3.0~~2.8~~ miles parallel the existing BPA line. Details of the infrastructure needed at the Stanfield Substation will be negotiated with BPA and may include a transformer, which would be installed within the BPA fence line and would not be subject to this site certificate.

7.1.3 Project Substations

The Project will include two substations, in total occupying approximately 16.4 acres. The Project substations will be placed strategically within the Site Boundary, to aggregate the power being transmitted by the 34.5-kV collector lines. The proposed substation locations are shown on Figure~~s~~ C-4 ~~and C-5~~ in Exhibit C.

Each substation will be enclosed by a security wire mesh fence to prohibit unauthorized access. The southern Project substation will be enclosed by its own fence, whereas the northern Project substation may be enclosed by its own fence or rely on the larger solar siting area fence line as depicted for analysis (see Figure C-5 in Exhibit C). Substation equipment will include transformers, transmission line termination structures, a bus bar, circuit breakers and fuses, control systems, meters, ~~diesel generator,~~ and other equipment. The area within the fence line will be graded approximately flat, with a bed of crushed rock applied for a durable surface.

7.2 Battery Energy Storage System

The Applicant proposes the option to construct a BESS either as a consolidated area near the O&M Building and northern Project substation on the western side of the solar array, or in distributed units throughout the solar array (Exhibit C, Figure C-5). The BESS will be capable of storing and later deploying up to 120 MW of energy generated by the Project. Two battery options may be used: AC- or DC-coupled lithium-ion batteries or AC-coupled flow batteries (see Figures B-9 and B-10 for representative drawings). Both systems use a series of self-contained containers and will be within the larger solar siting area fence line (and may or may not be separately fenced within the overall footprint).

7.2.1 Battery Storage Options

7.2.1.1 Lithium-ion Batteries

Lithium-ion batteries are the most common type of utility-scale BESS technologies. Lithium-ion batteries are a type of solid-state rechargeable battery where lithium ions, suspended in an electrolyte, move from negative to positive electrodes and back when recharging. A variety of chemistries fall under the "lithium-ion" term, each with varying performance, cost, and safety characteristics (Energy Storage Association 2020). Lithium-ion batteries have a typical lifespan of 5 to 10 years and will experience a consistent degradation of performance over that time. The lithium-ion battery technology under consideration for this project has an assumed replacement rate of every 10 years. Lithium-ion batteries are generally used in utility-scale applications when rapid, short-term (minute) deployments of power are needed. For example, lithium-ion batteries can smooth the fluctuating generation from solar arrays, which can vary based on time of day and cloud cover, to deliver consistent and predictable power to the grid. In the layout shown on Figure C-5 in Exhibit C, the lithium-ion BESS is depicted as sixty 2-MW blocks distributed throughout the solar array ("DC Storage Inverter Blocks"). This is considered the maximum scenario for purposes

of analysis; however, it is also possible to have a consolidated lithium-ion BESS configuration in the same location as that shown for the centralized BESS blocks also shown on Figure C-5.

7.2.1.2 Flow Batteries

Flow batteries are a newer technology for utility-scale battery storage systems. Similar to how "solid-state" batteries refer to a suite of battery technologies, "flow batteries" refer to any battery where two electrolyte solutions, one with positive ions and the other with negative ions, are contained in separate tanks and the migration of electrons from one solution to the other, typically through a membrane, creates electricity. The different classes of flow batteries include reduction-oxidation (redox) flow, hybrid, and membrane-less (Energy Storage Association 2020). Like lithium-ion batteries, each class of flow battery includes a variety of chemistries with different characteristics. Flow batteries typically have a life span of 10 to 20 years, but do not degrade over time like conventional batteries. The flow battery technology under consideration for this Project is a redox system with an expected lifespan of 30 years. During normal operations, the electrolyte solutions are recovered and reused during the recharging process. The chemicals used are generally not highly reactive or toxic substances. Examples of electrolyte solutions range from food-grade substances used in ViZn Energy battery systems to vanadium sulphate aqueous solution in the Sumitomo Electric Redox Flow Battery system (representative system shown in Figure B-10). While the Project is not anticipated to include both flow and lithium-ion BESS systems concurrently, the maximum solar layout depicted on Figure C-5 in Exhibit C shows the approximate location where four BESS blocks would be placed instead of solar modules, should a flow BESS or consolidated lithium-ion BESS be selected.

7.2.2 Battery Storage System Equipment

The battery storage design will include, but not be limited to, the following elements. The details and complexity of these elements depend on the final BESS selected.

- Battery storage equipment, including batteries and racks or containers, inverters, isolation transformers, and switchboards;
- Balance of plant equipment, which may include medium-voltage and low-voltage electrical systems, fire suppression, heating, ventilation, and air-conditioning systems, building auxiliary electrical systems, and network/SCADA systems;
- Cooling system, which may include a separate chiller plant located outside the battery racks with chillers, pumps, and heat exchangers; and
- High-voltage (HV) equipment, including a step-up transformer, HV circuit breaker, HV current transformers and voltage transformers, a packaged control building for the HV breaker and transformer equipment, HV towers, structures, and HV cabling.

Both the lithium-ion and flow battery technologies are often placed in standard-sized shipping containers on a concrete slab, as represented on Figures B-9 and B-10. Each container holds the

batteries, a supervisory and power management system, cooling system (typical for lithium-ion), and a fire prevention system. By connecting multiple containers, the battery storage system can be scaled to the desired capacity. Containers may be stacked up to two levels with an estimated maximum height of approximately 20 feet. For additional details on dimensions used for purposes of this analysis, see Section 8.7.

7.2.3 Battery Storage System Operations and Maintenance

The batteries and other materials for the battery storage system will be manufactured offsite and transported to the Project by truck. As applicable, defective or decommissioned parts will be disposed of or recycled in compliance with 49 CFR 173.185, which regulates the transportation of lithium-ion batteries.

The O&M activities will mainly consist of minimal procedures that do not require tampering with the battery cell components. For the purposes of analysis, it is assumed flow batteries will require replacement of the electrolyte solutions every 30 years, whereas lithium-ion systems require more frequent replacement of the batteries every 10 years.

Both BESS options will be stored in steel modules. The modules will be stored on a concrete pad to capture any leaks that may occur. As noted earlier, the flow BESS would have additional secondary containment due to the volume of electrolyte and associated pumps, pipes, etc. (see Section 4.0). O&M staff will conduct inspections of the BESS according to the manufacturer's recommendations, which are assumed to be monthly inspections.

As described in Section 4.0, an SPCC Plan will be developed to manage, prevent, contain, and control potential releases, and provide provisions for quick and safe cleanup of hazardous materials. Fire prevention and control measures specific to the BESS options are discussed in Section 5.0.

~~7.2~~7.3 Meteorological Towers

The Project includes up to three permanent met towers spaced throughout the Project. The met towers are required to measure the wind speeds around the Project separate from the wind turbines for verification of the wind turbines' performance. The met towers will be either a freestanding, non-guyed design or guyed wire towers, depending on landowner input, with a maximum height of up to approximately 541 feet to match the hub height of the selected turbine. The foundation of each permanent met tower will be a square concrete pad approximately 24 feet by 24 feet (Figure B-~~5~~11). In addition, an access road will be constructed to reach each met tower. Exhibit C presents the temporary and permanent impacts of the met towers and access roads associated with each turbine option. FAA lighting may be installed on the met towers, depending on the overall lighting scheme for the Project, to be determined prior to operation and in consultation with FAA.

~~7.3~~7.4 Communication and SCADA System

A communication system consisting of fiber optic and copper communication lines will connect the turbines, solar array, BESS, and Project substations to the O&M Building. These communication lines will run with the collector lines, either buried or overhead, depending on site-specific conditions. Where buried, the communication lines are placed above the collector lines in the trench, and where overhead, run alongside the collector lines. This communication system allows each turbine, solar string, BESS, and s~~S~~ubstation to be monitored by a SCADA system, installed in the O&M Building. This system monitors ~~each turbine~~these components and the met tower data for variables such as meteorological conditions, critical operating parameters, and power output. The turbines and solar array are controlled and monitored via the SCADA system, and can be controlled remotely. SCADA software is tuned specifically to the needs of each ~~wind~~ project by the turbine and/or solar module manufacturer or a third-party SCADA vendor.

~~7.4~~7.5 Operations and Maintenance Building

The Project includes one O&M Building. The O&M Building will be a one- or two-story structure of approximately 6,000 square feet. The ~~fenced~~ area around the O&M Building will occupy approximately 7.6 acres; however, ~~it will be enclosed within~~for purposes of analysis, the footprint is included within the larger solar siting area ~~fence line~~. Immediately adjacent to the building ~~and within this acreage~~ will be a parking lot for employees, visitors, and Project equipment. The O&M Building will consist of a warehouse, maintenance bay, control room, office, break room, kitchen, bathroom with shower, utility room, server room, and storage room. Electricity and telephone service will be provided to the O&M Building from local providers using overhead or underground lines. A backup UPS system will be stored in the control room, which includes up to ~~10~~ 2 lead-acid batteries (see Section 4.0). Water will be provided by an on-site well. Water use is estimated at 50 to 100 gallons per day per worker, for a total of less than 5,000 gallons per day. The kitchen, toilets, and shower will drain into an on-site septic system, also located within the fenced area, to be permitted for the building prior to construction through Umatilla County.

The O&M Building will be located adjacent to the northern substation (see Figures C-4 and C-5).

~~7.5~~7.6 Access Roads

Turbine and solar array components will be delivered to the Project site via truck (though prior to truck transport, they may travel by rail to a distribution center near ~~/towards~~ the Project site). The primary transportation route will follow I-84, then turn south on US Highway 395, and then west on County Road 1350 (Coombs Canyon Road) to reach local roads within the Site Boundary (see Exhibit U for the transportation analysis). Multiple county roads within the Site Boundary will be used to access new and existing roads within the Project area (see Exhibit U). Some components may be transported first by rail to Stanfield, Hermiston, or similar regional rail center/distribution center, then by truck to the site following the transportation route described above.

Access to the turbine sites, construction yards, substations, ~~and~~ O&M Building, solar array, and BESS will be via a network of existing or new site access roads to be constructed or improved by the

Applicant as part of the Project's construction within the Site Boundary. To minimize impacts to agricultural operations, grazing lands, and wildlife habitat, existing private roads and farm access tracks will be utilized to the greatest extent practicable. During construction, some roads may need temporary widening and an additional shoulder for turnaround areas for larger vehicles. These areas will be reclaimed upon completion of construction. All existing public roads used to access the Project will be left in "as good or better" condition than that which existed prior to the start of construction.

All newly constructed and improved site access roads will be graded and graveled to meet load requirements for heavy construction equipment, as necessary. Most site access roads will be initially constructed to be wider than needed for operations, to accommodate the large equipment needed for construction. Following turbine construction, the site access roads will be narrowed for use during O&M. The additional disturbed width required during construction will be restored following the completion of construction by removing gravel surfacing, restoring appropriate contours with erosion and stormwater control best management practices, decompacting as needed, and revegetating the area appropriately. For purposes of impact assessment outside of the solar siting area, a temporary impact corridor 82 feet in width and a permanent impact corridor of 16 feet in width are used; these corridors will encompass the site access roads, as well as most crane paths, cut and fill slopes, and any necessary drainage or erosion control features. Where crane paths do not follow roads, they may temporarily disturb a 75-foot-wide corridor. Within the solar siting area (see Figure C-5 in Exhibit C), new access roads will be 16 to 20 feet wide; however, the entire acreage is considered permanently disturbed and access road corridors are not calculated separately (see Exhibit C).

The 230-kV transmission lines will be constructed and maintained using only large trucks rather than heavy construction cranes. Generally, construction is expected to take place during the dry time of year when the ground surface is hard enough to support those vehicles. However, to conservatively estimate maximum potential impacts, a temporary disturbance corridor along the transmission line route is assumed to be up to ~~108~~ 200 feet wide along the length of the transmission line, which includes any potential temporary access improvements. In areas of sensitive habitat, primarily shrub-steppe vegetation, the temporary impact corridor was narrowed to 50 feet to minimize Project disturbance. During operations, maintenance trucks will be driven off-road over open land to reach the transmission line.

The total mileage of the site access roads ~~will vary depending on the turbine option chosen for the Project. The Option 1 layout will require approximately 38 miles of site access roads, of which approximately 29 miles will be new permanent access roads, and 9 miles will be temporary improvements to existing roads. The Option 2 layout will require~~for the wind layout will be approximately ~~63~~ 62 miles~~ of site access roads~~, of which about ~~44~~ 43 miles will be new permanent access roads and 19 miles will be temporary improvements to existing roads. Exhibit C presents the areas of temporary and permanent disturbance associated with the site access roads~~ for each turbine option~~. An additional approximately 18 miles of new permanent access roads will be

constructed to access the solar array and BESS within the permanent solar siting area fence line as noted earlier.

~~7.6~~7.7 Construction Yards

During construction, the Applicant will establish one central temporary staging area within the Project Site Boundary, to facilitate the delivery and assembly of material and equipment. The construction laydown yard will be located off County Road 1350, adjacent to the northern substation location. The staging area will contain field construction offices; will be used to store construction equipment when not in use; will be used for storage of construction supplies and materials; may contain temporary concrete batch plants; and may be used for assembly of some Project components. Typically, turbine and tower components will be delivered directly to each turbine site rather than being received and stored at the construction yards. The staging area will be a graded area, surfaced in gravel, as necessary, of approximately ~~30~~ 27 acres and will be signed as private, no trespassing with on-site security staff. This area is intended as a temporary construction yard and is unlikely to be permanently fenced; however, for analysis purposes, the area is depicted within the solar siting area permanent fence line, and therefore the land could either remain open for use as needed by the Project during operations or be restored to pre-construction conditions per landowner agreement. ~~The temporary staging area may also be fenced along the perimeter. The staging area will be restored to pre-construction conditions unless an agreement with the landowner leads to some or all the area being retained after construction.~~ Restoration of a construction yard will typically involve removal of gravel surfacing; regrading to pre-construction contours; restoration of topsoil as needed; soil decompaction if necessary; and seeding and/or planting to restore agricultural or habitat lands as appropriate. The Applicant will coordinate with the landowner for final restoration requirements in agricultural areas.

In addition to the central temporary staging area, 8 to 11 smaller temporary staging areas (less than 1,000 square feet each) will be distributed throughout the Project site to support construction. All together, these areas will entail less than 0.5~~-~~ acre total of temporary disturbance. Construction staging at each turbine tower site was described above in Section 2.4, Turbine Foundations.

The Applicant anticipates that the construction contractor will utilize an on-site temporary concrete batch plant instead of sourcing concrete from existing suppliers. Therefore, for the purposes of the ASC, the Applicant assumes that one or two temporary concrete batch plants will be utilized during construction of the Project. The concrete batch plants will be located within the central temporary staging area, and therefore do not have associated independent impact areas. The permits for the use of temporary batch plants will be secured by the construction contractor through Umatilla County. In addition, each concrete batch plant requires a state air quality permit, which will also be held by the construction contractor or a qualified third-party contractor. These third-party permits are described in more detail in Exhibit E. The Applicant may at the time of construction choose to instead purchase concrete directly from a licensed third-party contractor and have it delivered directly to the site as required, thereby removing the need for on-site batch plants.

If on-site batch plants are used, the qualified third-party contractor will be responsible for identifying appropriate sources for rock and water and obtaining any needed permits, with support from the Applicant as -needed. The contractor will similarly be responsible for obtaining rock/gravel for road construction. Potential third-party permits are described in more detail in Exhibit E.

8.0 Approximate Dimensions of Major Structures – OAR 345-021-0010(1)(b)(C)

(C) The approximate dimensions of major ~~Project~~ facility structures and visible features.

8.1 Wind Turbine Dimensions

Table B-1 shows the typical configuration for a wind turbine, illustrating the range of dimensions for the total height, tower, rotor blade, and rotor diameter under consideration for the Project.

8.2 Solar Array Dimensions

The solar array will comprise linear rows (strings) of modules within the perimeter fence line depicted in Exhibit C, Figure C-5. The dimensions of the example modules used in the Project layout for purposes of ASC analysis are shown on Figure B-5. The panel faces would be approximately 6.9 feet by 3.4 feet, with a depth of 1.4 inches. The maximum height of the solar array will be 18 feet when the modules are tilted on the racking system (Figures B-6 and B-7). Chain-link or security mesh perimeter fencing, up to 8 feet in height with no barbed wire, will enclose the solar array, with at least two gates sized to allow for emergency vehicle access. The exact number and size of modules, layout, and associated equipment specifications will be determined during final design; however, as noted earlier, the actual solar array equipment and layout selected will not exceed the impacts analyzed.

~~8.2~~8.3 Operations and Maintenance Building Dimensions

As stated above, the Applicant plans to construct an O&M Building for the Project. The O&M Building will be located on approximately 7.6 acres and will consist of a building totaling approximately 6,000 square feet, and a warehouse, septic field, parking, access road, and water well. Temporary impacts during construction may occur along an area extending up to 50 feet outside the fence line.

~~8.3~~8.4 Project Substation Dimensions

As stated above, two on-site Project substations are proposed to be installed. The northern Project substation will occupy an approximately 10.5-acre site, and the southern Project substation will encompass approximately 5.9 acres.

~~8.4~~8.5 Transmission Line Dimensions

The single-circuit 230-kV transmission line between the southern and northern Project substations will be approximately 6.8 miles. As described earlier, the Applicant is considering two possible routes for an overhead ~~single-circuit~~ 230-kV transmission line to connect with the regional grid. The ~~primary option, the~~ UEC Cottonwood route~~,~~ will be approximately ~~24.9~~25.3 miles in length, of which approximately ~~17.2~~8.4 miles will be a new single-circuit 230-kV transmission line, approximately 9.6 miles will replace an existing 12.47-kV distribution line with a 230-kV transmission line and distribution underbuild, and approximately 7.3~~7~~ miles ~~an~~ will upgrade ~~of~~ an existing 115-kV UEC transmission line to a double-circuit 230/115-kV line with 12.47-kV underbuilt distribution. The alternative BPA Stanfield route will be approximately ~~4.1~~5 miles in length, of which approximately ~~2.8~~3 miles will parallel an existing 500-kV transmission line, outside of the existing transmission line's right-of-way.

~~The~~ All Project 230-kV overhead transmission lines will be supported by wooden H-frame or steel monopole structures approximately 100 to 140 feet tall and spaced approximately 600 feet apart on average, depending on the terrain.

8.6 34.5-kV Overhead Collector Line Dimensions

Any 34.5-kV overhead collector lines needed for the Project will be constructed with single- or double-circuit wood monopole structures. The structures will be up to 100 feet tall, depending on the terrain, with 3-foot-diameter poles spaced approximately 150 to 300 feet apart. An estimated 9.1 miles of overhead collector lines may be required for the wind facility layout. For the solar array collection system, up to 5.5 miles could be constructed overhead (approximately 10 percent of the total conductor cable trench length); however, this is a conservative assumption as the Applicant's preferred design is to locate all solar collector lines underground.

8.7 Battery Storage Dimensions

Both the lithium-ion and flow battery technologies are often placed in shipping containers on a concrete slab. Each container holds the batteries, a supervisory and power management system, cooling system (typical for lithium-ion), and a fire prevention system. By connecting multiple containers, the battery storage system can be scaled to the desired capacity. Containers may be stacked up to two levels with an estimated maximum height of approximately 20 feet. For purposes of this analysis, the lithium-ion BESS is assumed to require 240 containers that are approximately 22 feet long by 8 feet wide by 9.5 feet tall (4 containers per 2-MW block, in 60 distributed locations; see Figure B-9 as well as Figure C-5 in Exhibit C). The representative flow BESS assumes four adjacent 25-MW battery blocks, each consisting of three standard International Organization for Standardization (or ISO) high-cube containers: one 40-foot anolyte container and one 40-foot catholyte container arranged side by side at ground level, with a 20-foot container for battery cell stack and power conversion equipment stacked on top accessible by stairs and platform (Figure B-10). The overall flow BESS dimension per block is 40 feet long by 16 feet wide by 19.5 feet tall. The BESS area will be within the permanent solar siting area fence line (though may have its own

additional fencing), and the entire footprint is assumed to be permanently disturbed (see Exhibit C). As stated earlier, all technology described is preliminary and, while final design may differ, impacts will not exceed those analyzed in this ASC.

9.0 Corridor Selection Assessment – OAR 345-021-0010(1)(b)(D)

(D) If the proposed energy ~~Project~~ facility is a pipeline or a transmission line or has, as a related or supporting ~~Project~~facility, a transmission line or pipeline that, by itself, is an energy ~~Project~~ facility under the definition in ORS 469.300, a corridor selection assessment explaining how the applicant selected the corridors for analysis in the application. In the assessment, the applicant must evaluate the corridor adjustments the Department has described in the project order, if any. The applicant may select any corridor for analysis in the application and may select more than one corridor. However, if the applicant selects a new corridor, then the applicant must explain why the applicant did not present the new corridor for comment at an informational meeting under OAR 345-015-0130. In the assessment, the applicant must discuss the reasons for selecting the corridors, based upon evaluation of the following factors:

(i) Least disturbance to streams, rivers and wetlands during construction;

(ii) Least percentage of the total length of the pipeline or transmission line that would be located within areas of Habitat Category 1, as described by the Oregon Department of Fish and Wildlife;

(iii) Greatest percentage of the total length of the pipeline or transmission line that would be located within or adjacent to public roads and existing pipeline or transmission line rights-of-way;

(iv) Least percentage of the total length of the pipeline or transmission line that would be located within lands that require zone changes, variances or exceptions;

(v) Least percentage of the total length of the pipeline or transmission line that would be located in a protected area as described in OAR 345-022-0040;

(vi) Least disturbance to areas where historical, cultural or archaeological resources are likely to exist;

(vii) Greatest percentage of the total length of the pipeline or transmission line that would be located to avoid seismic, geological and soils hazards;

(viii) Least percentage of the total length of the pipeline or transmission line that would be located within lands zoned for exclusive farm use;

The proposed Project is not a pipeline or a transmission line as defined by Oregon Revised Statute (ORS) 469.300. The Project includes neither a pipeline nor transmission line that, by themselves, would be considered an energy ~~Project~~ facility under ORS 469.300(11)(a)(C).

The Project will require, as a related or supporting facility, a new overhead 230-kV transmission line. As described earlier, the proposed transmission line will follow one of two possible routes to connect with the regional grid, leading from the northern Project substation to either the existing UEC Cottonwood Substation or proposed BPA Stanfield Substation. The UEC Cottonwood route will be approximately ~~24.9~~25.3 miles in total length, while the BPA Stanfield route will be approximately ~~4.1~~5 miles in length. This transmission line does not fall within the definition of "energy ~~Project~~facility" under ORS 469.300(11)(a)(C) because, while the proposed transmission line may be more than 10 miles in length and have a capacity of 230,000 volts, it is proposed in only one county and not sited within any city.

10.0 Transmission Line Length, Right-of-Way, and Power – OAR 345-021-0010(1)(b)(E)

(E) If the proposed energy ~~Project~~ facility is a pipeline or transmission line or has, as a related or supporting ~~Project~~facility, a transmission line or pipeline of any size:

10.1 Length of Line

(i) The length of the pipeline or transmission line.

The proposed 230-kV transmission line route will be up to approximately ~~24.9~~25.3 miles in length for the UEC Cottonwood route, or approximately ~~4.1~~5 miles for the alternative BPA Stanfield route.

10.2 Right-of-Way

(ii) The proposed right-of-way width of the pipeline or transmission line, including to what extent new right-of-way will be required or existing right-of-way will be widened.

The 230-kV transmission line~~s~~ will require the acquisition of an approximately 100-foot-wide right-of-way from private landowners, except in locations already under lease for the Project by the Applicant, or for the UEC Cottonwood route, where UEC already controls sufficient right-of-way width. The extent of right-of-way acquisition and/or widening required will be determined during final design by UEC or the Applicant, depending on the route selected and ultimate permitting of the transmission line (see Section 1.4~~3~~, Grid Interconnection). Both routes parallel existing roads and transmission lines to the extent practicable. Where the BPA Stanfield route parallels an existing 500-kV transmission line, the Applicant is evaluating alternative corridors on either side of BPA's right-of-way (to the south/west and north/east; see Exhibit C); however, only one would be constructed if the BPA Stanfield route is selected. The necessary legal documents granting the rights-of-way will be finalized and recorded with Umatilla County prior to beginning construction of the 230-kV transmission line(s).

10.3 Public Right-of-Way

(iii) If the proposed transmission line or pipeline corridor follows or includes public right-of-way, a description of where the transmission line or pipeline would be located within the public right-of-way, to the extent known. If the applicant proposes to locate all or part of a transmission line or pipeline adjacent to but not within the public right-of-way, describe the reasons for locating the transmission line or pipeline outside the public right-of-way. The applicant must include a set of clear and objective criteria and a description of the type of evidence that would support locating the transmission line or pipeline outside the public right-of-way, based on those criteria.

Public right-of-way will be used to the extent it: a) is available for the addition of a 230-kV transmission line, b) allows for the minimum separation distance required for safety between transmission lines, c) provides for an efficient route to connect to the regional grid, and d) supports compliance with local land use regulations (see Exhibit K). As noted above, both the UEC Cottonwood route and BPA Stanfield route parallel existing roads and transmission lines to the extent practicable.

10.4 Pipeline Capacity

(iv) For pipelines, the operating pressure and delivery capacity in thousand cubic feet per day and the diameter and location, above or below ground, of each pipeline.

The Project does not contain a pipeline; therefore, this requirement is not applicable.

10.5 Transmission Line Power

(v) For transmission lines, the rated voltage, load carrying capacity, and type of current and a description of transmission line structures and their dimensions.

The Applicant proposes to construct two on-site Project substations to increase the rated voltage from the 34.5-kV collection system to 230 kV, for transmission along new and upgraded UEC transmission lines to the UEC Cottonwood Substation, or through a new overhead transmission line that will connect the Project to the proposed BPA Stanfield Substation. The type of current will be alternating current. The 230-kV overhead transmission line will be supported by H-frame or monopole structures. The structures will be approximately 100 to 140 feet above grade and spaced an average of approximately 600 feet apart.

11.0 Construction Schedule – OAR 345-021-0010(1)(b)(F)

(F) A construction schedule including the date by which the applicant proposes to begin construction and the date by which the applicant proposes to complete construction. Construction is defined in OAR 345-001-0010. The applicant must describe in this exhibit all work on the site that the applicant intends to begin before the Council issues a site certificate. The applicant must

include an estimate of the cost of that work. For the purpose of this exhibit, "work on the site" means any work within a site or corridor, other than surveying, exploration or other activities to define or characterize the site or corridor, that the applicant anticipates or has performed as of the time of submitting the application.

Facility construction is targeted to commence in ~~Spring~~ 2021, pending issuance of a Site Certificate from EFSC. The completion of commissioning and start of commercial operation is targeted for the end of 2023, though the Applicant will try to bring the facility online earlier if achievable~~2~~. However, given that construction could conceivably be delayed by weather or other unforeseen circumstances such as market changes, the Applicant would like the flexibility to build the Facility in one or more phases, and requests a deadline for construction completion of 3 years later than the deadline for beginning construction, or 6 years from issuance of the site certificate. Additional engineering and geotechnical investigations may occur prior to issuance of the site certificate. As defined in ORS 469.300(6), surveying and exploration activities (such as geotechnical investigations) are excluded from the definition of construction work. No other construction work is anticipated to begin prior to issuance of the site certificate.

12.0 References

APLIC (Avian Power Line Interaction Committee). 2006. Suggested Practices for Avian Protection on Power Lines: The State of the Art in 2006. Edison Electric Institute, APLIC, and the California Energy Commission. Washington, D.C. and Sacramento, CA. https://www.aplic.org/uploads/files/2643/SuggestedPractices2006(LR-2).pdf

Battery University. 2018. BU-304a: Safety Concerns with Li-ion. Last Updated October 2018. http://batteryuniversity.com/learn/article/safety_concerns_with_li_ion. Accessed December 2018.

Energy Storage Association. 2020. *Why Energy Storage, Technologies - Batteries.* https://energystorage.org/why-energy-storage/technologies/solid-electrode-batteries/. Accessed June 2020.

LAZARD. 2016. Lazard's Levelized Cost of Storage—Version 2.0. December. https://www.lazard.com/media/438042/lazard-levelized-cost-of-storage-v20.pdf.

NFPA (National Fire Protection Association). 2020. NFPA Codes and Standards. Standard 68 on Explosion Protection by Deflagration Venting. Standard 69 on Explosion Prevention Systems. Available online at: https://www.nfpa.org/Codes-and-Standards/All-Codes-and-Standards/List-of-Codes-and-Standards

UL (UL, LLC). 2018. "Test Method for Evaluation Thermal Runaway Fire Propagation in Battery Energy Storage Systems." UL 9540A.

Figures

This page intentionally left blank

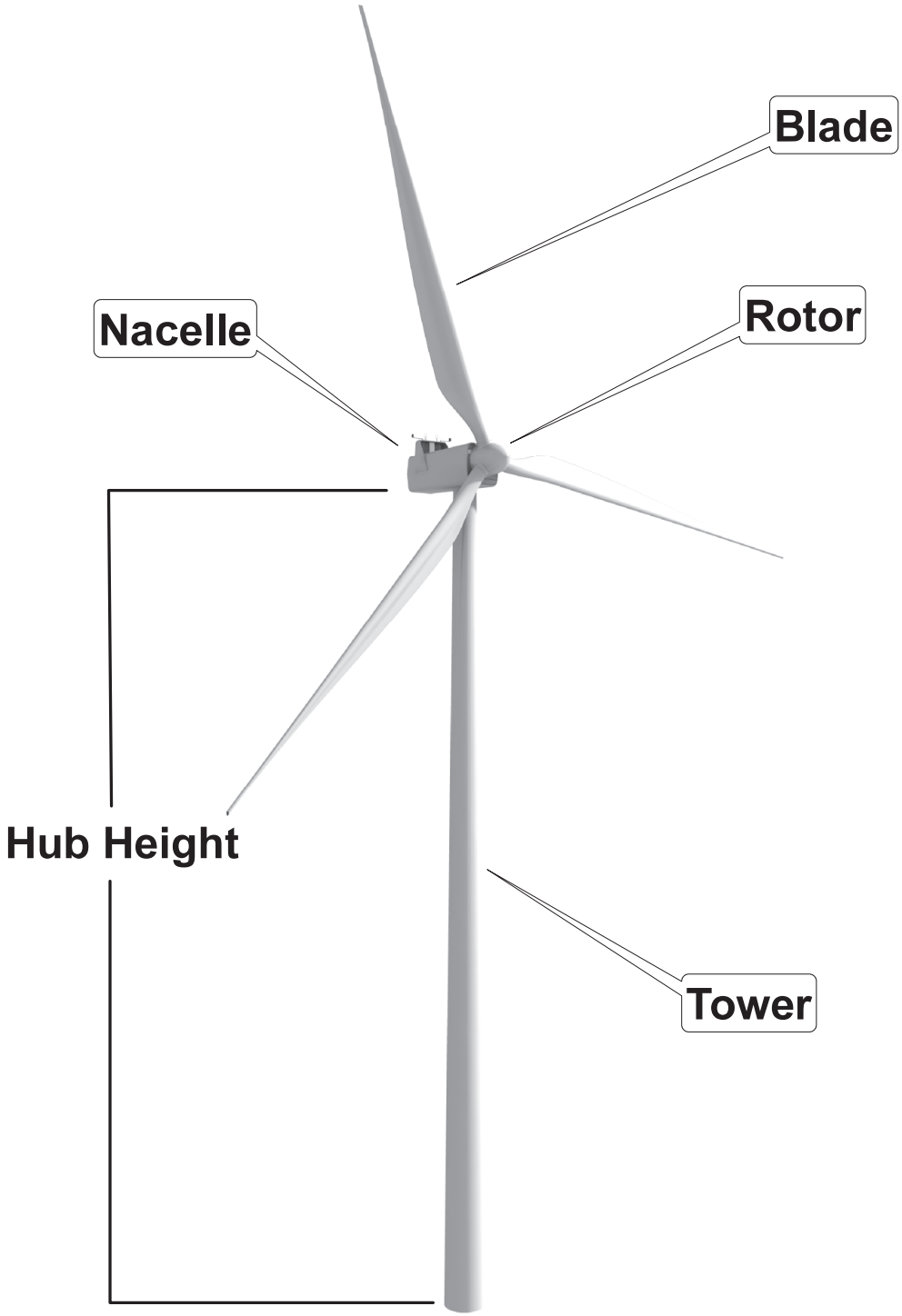

Nolin Hills
Wind Power Project

FIGURE B-1
TYPICAL WIND TURBINE

UMATILLA COUNTY, OREGON

TETRA TECH

Nolin Hills
Wind Power Project

FIGURE B-2
TYPICAL SPREAD-FOOTING FOUNDATION

UMATILLA COUNTY, OREGON

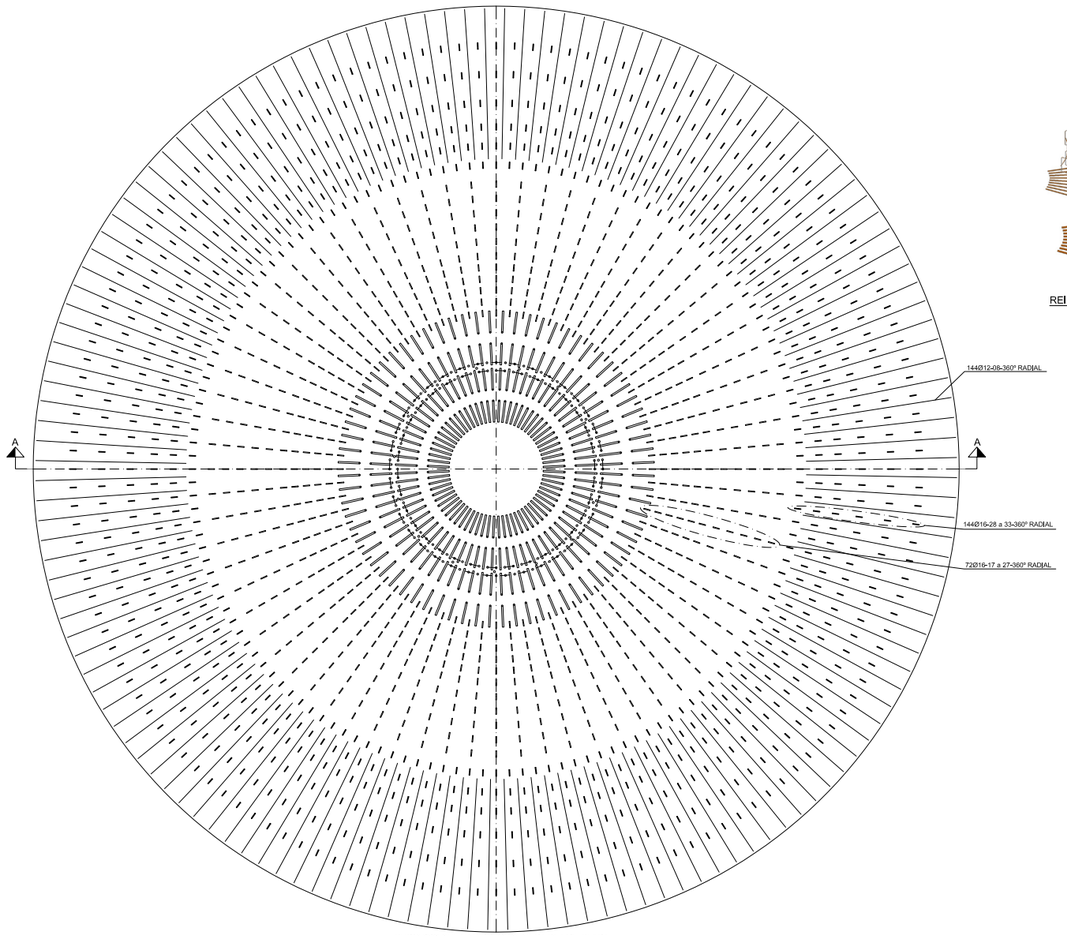

PUNCHING SHEAR REINFORCEMENT DETAIL, PLANT
1:50

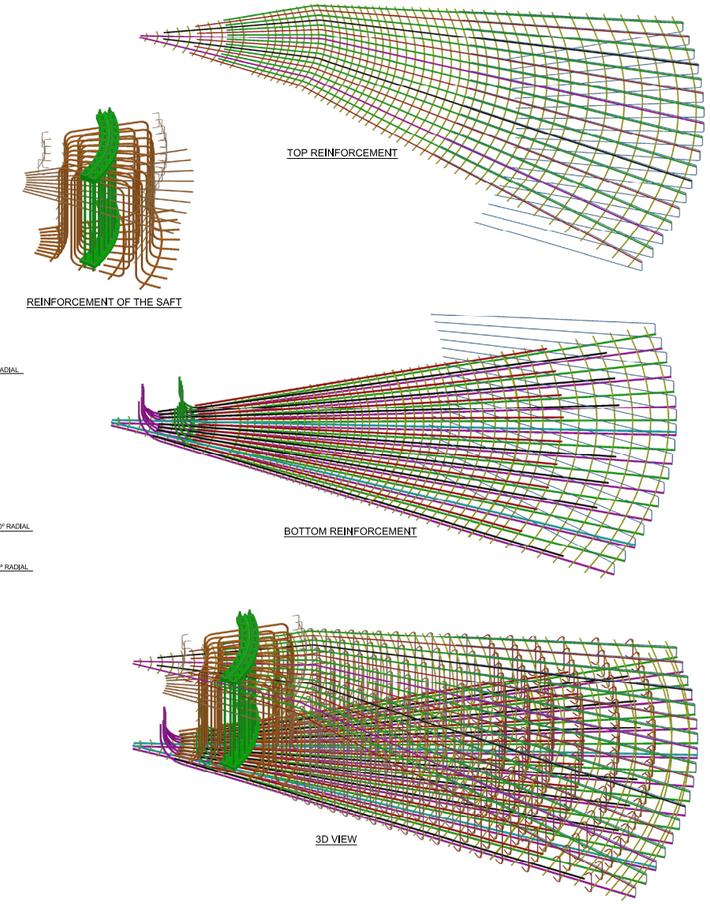

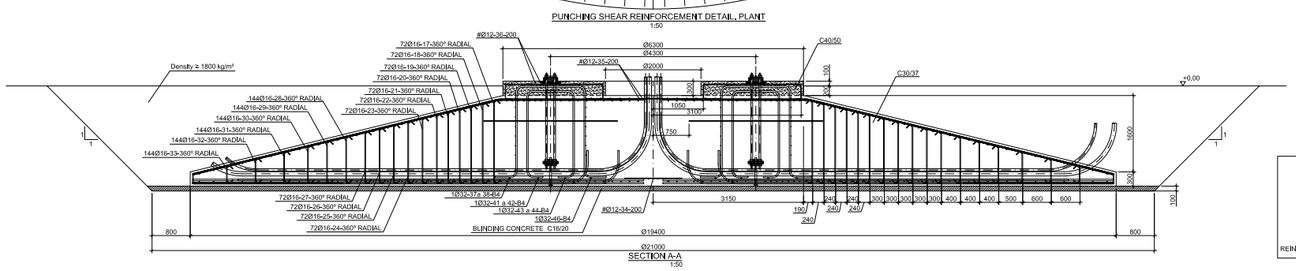

SECTION A-A
1:50

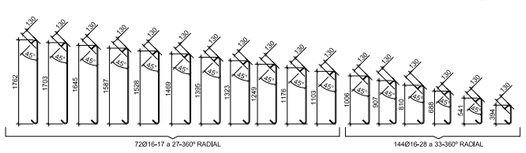

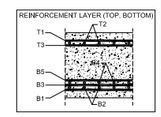

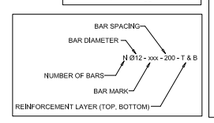

ANCHORAGE AND LAP LENGTHS ACCORDING TO EC-2 (UNLESS SPECIFIED AT DRAWING)

BAR DIAMETER, D [mm] STEEL B 500 A		Reinforcement in tension								Reinforcement in compression	Concrete Class	Condition
		8	10	12	16	20	25	32	40	D		
Anchorage length, l_{bd} [mm]	Straight bars only	210	280	360	530	690	900	1150	1560	36D	C30/37	GOOD
		290	400	520	750	990	1280	1640	2230	51D	C30/37	POOR
Lap length, l_0 [mm]	100% lapped in one location (a/Ø=1.5)	310	420	540	790	1040	1350	1720	2340	54D	C30/37	GOOD
		430	600	780	1130	1480	1920	2460	3340	77D	C30/37	POOR

MATERIALS ACC. TO EN 206-1

REINFORCEMENT: STEEL S500 (fyk=500 MPa)
CONCRETE:
LEAN CONCRETE:
C16/20 (fck = 16 MPa cylinder test)
MAXIMUM SIZE OF COARSE AGGREGATE: 20mm
CONSISTENCE: 50-90mm
FOUNDATION:
SLAB: C30/37 (fck = 30MPa cylinder test)
PEDESTAL: C40/50 (fck = 40MPa cylinder test)
MAXIMUN SIZE OF COARSE AGGREGATE:15mm
CONSISTENCE: 100-150mm
EXPOSURE CLASS: XC2
COVERING: 50mm

FILLING SOILS WITH APPROPIATE MATERIAL FROM EXCAVATION IN LAYER THICKNESS OF 300mm (DENSITY ≥ 1800kg/m³)

NOTES:
1- GROUND WATER LEVEL BELOW FOUNDATION BASE.
2- PLACE SPACERS BELOW BOTTOM REINFORCEMENT
3- WELDING IS FORBIDDEN
4- SOIL BEARING RESISTANCE 300 kPa (SLS)

NOT VALID
FOR CONSTRUCTION

NOTE:
QUANTITY AND TYPE COMPONENTS MAY CHANGE DEPENDING ON WIND TURBINE MODEL

FOUNDATION QUANTITIES:

STEEL S50 (aprox.) = 38,463 kg
CONCRETE SLAB C30/37 = 314.5 m³
CONCRETE PEDESTAL C40/50 = 8.4 m³

REV./REV	FECHA/DATE	REALIZADO/CREATED	MODIFICACION / MODIFICATION
C	23-05-16	KLF	AÑADIR NOTA DE TOLERANCIA / TOLERANCE REMARK ADDED
B	04-05-16	KLF	ACTUALIZAR CTO JAULA CIMENTACION / FOUNDATION CAGE ASSEMBLY UPDATED
A	13-04-16	KLF	CREACION DE PLANO / DRAWING CREATION

MATERIAL / MATERIAL		TOLERANCIAS GENERALES / GENERAL TOLERANCES	PESO / WEIGHT (kg)	
	DIBUJADO DRAWN	COMPROBADO REVISED	APROBADO APPROVED	
NOMBRE NAME	K.L.F.			
FECHA DATE	23-05-2016	23-05-2016	23-05-2016	
ESCALA / SCALE	DENOMINACIÓN	EJEMPLO CIMENTACION AW3000 T87.5 V2		
1/50	NAME	FOUNDATION EXAMPLE AW3000 T87.5 V2		

PLANO Nº / DRAWING Nº	REVISIÓN / REVIEW
DG200624	C
HOJA Nº / SHEET Nº	1-4
FORMATO / FORMAT	A1

TETRA TECH

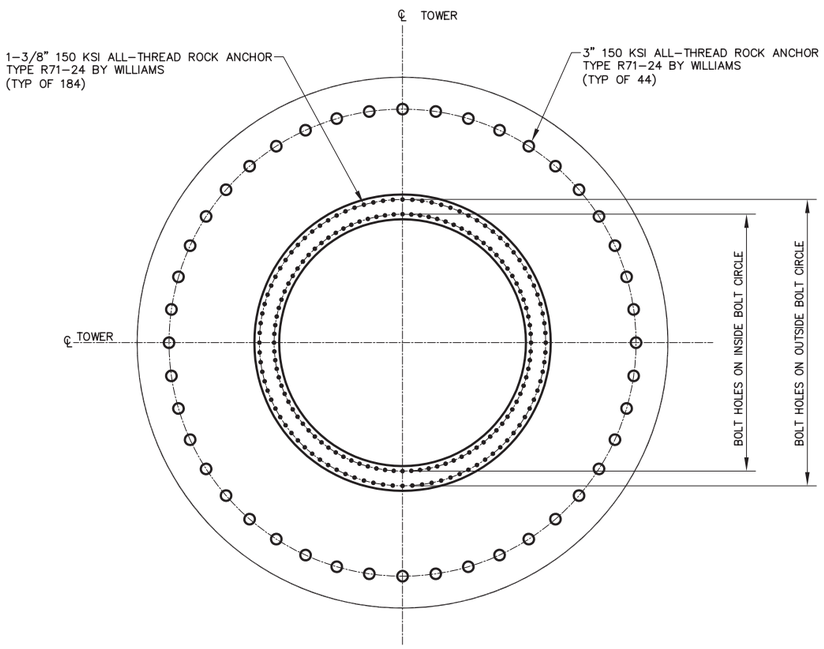

FOUNDATION PLAN

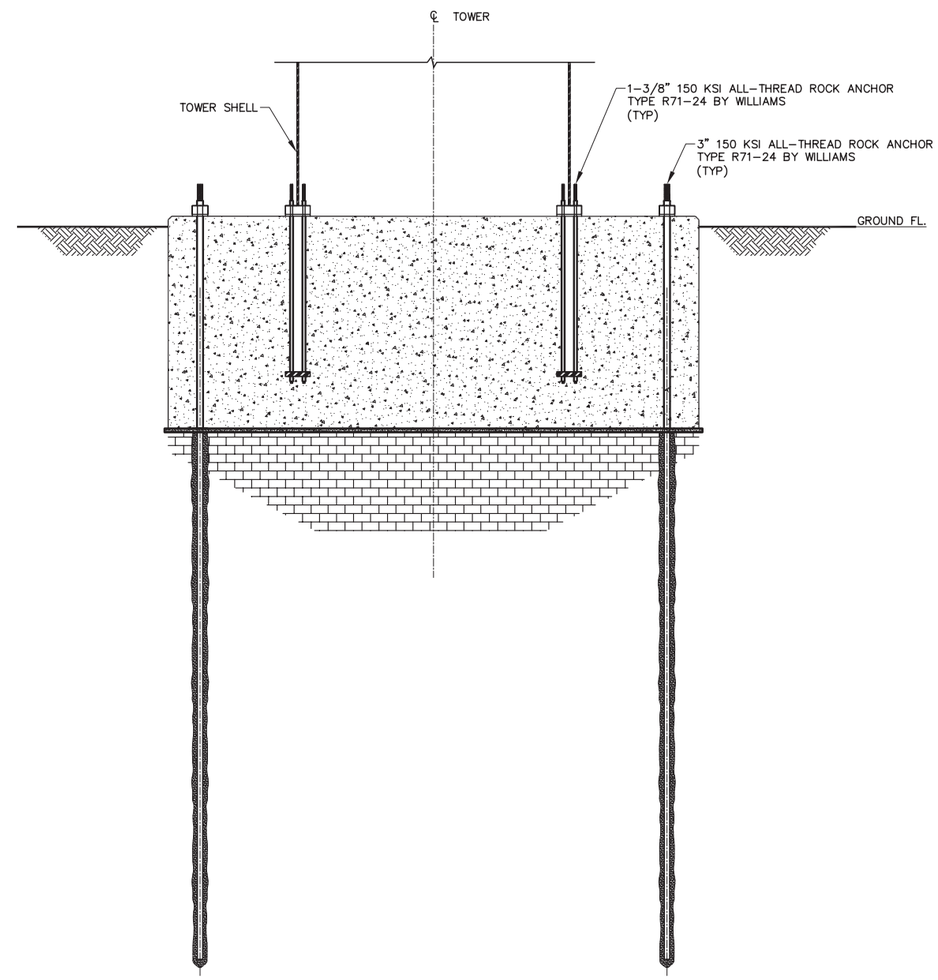

FOUNDATION SECTION

Nolin Hills Wind Power Project

FIGURE B-3

TYPICAL BEDROCK FOUNDATION

UMATILLA COUNTY, OREGON

TETRA TECH

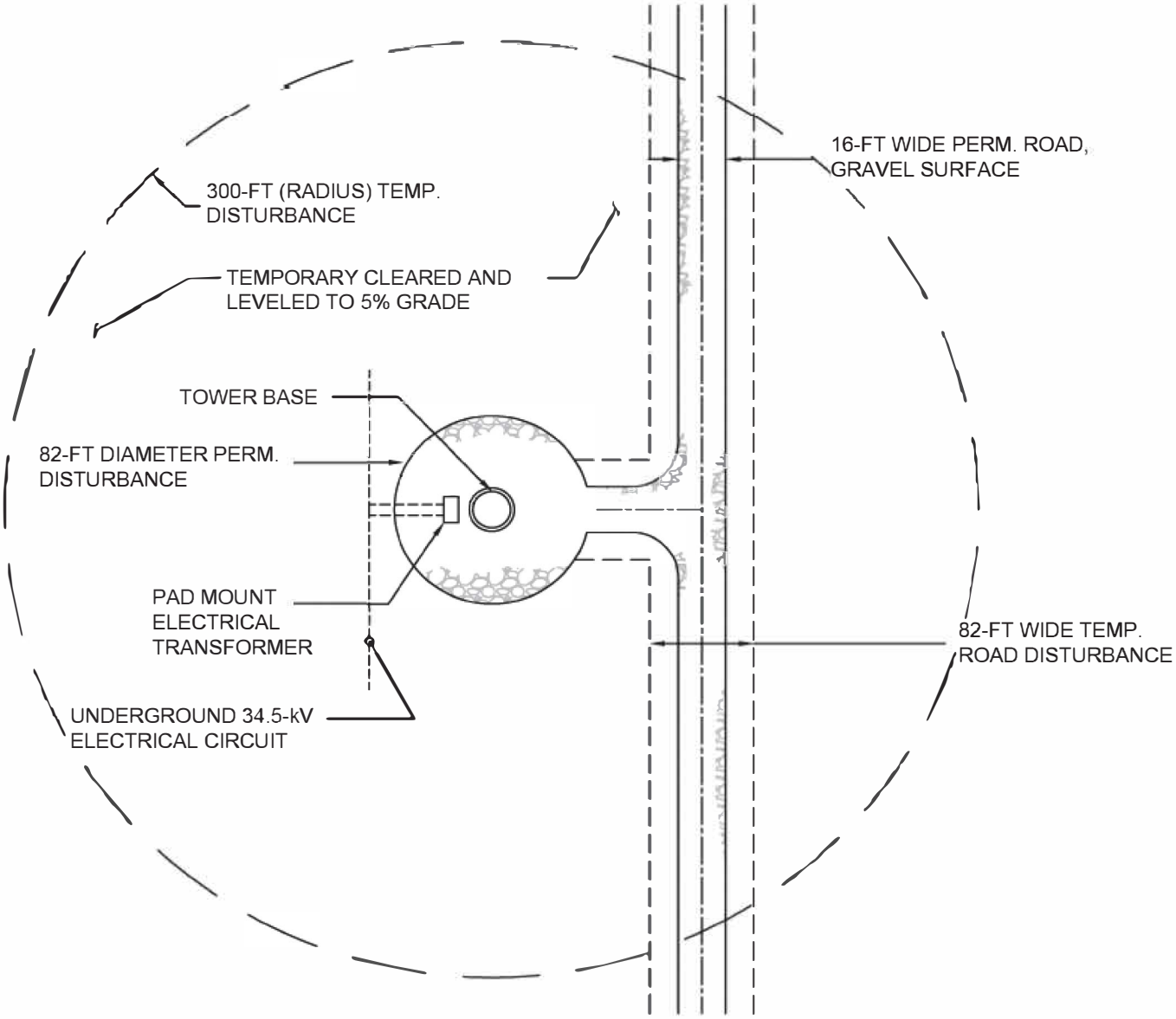

Nolin Hills
Wind Power Project

FIGURE B-4

TYPICAL TURBINE SITE
PLAN VIEW

UMATILLA COUNTY, OREGON

TETRA TECH

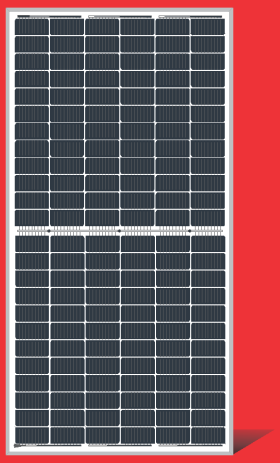

*Both 6BB & 9BB are available

LR4-72HBD
425~455M

Hi-MO 4
NEW

High Efficiency
Low LID Bifacial PERC with
Half-cut Technology

Design (mm)

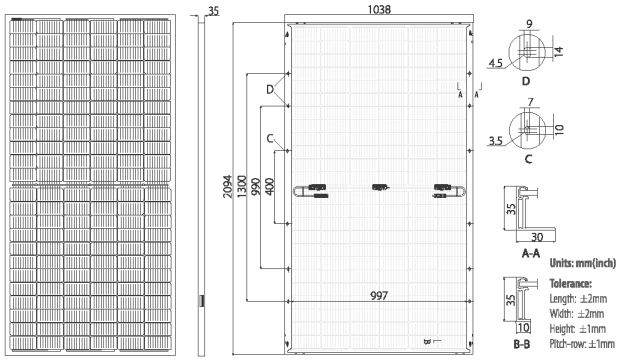

Mechanical Parameters

Cell Orientation: 144 (6×24)
Junction Box: IP68, three diodes
Output Cable: 4mm², 300mm in length, length can be customized
Glass: Dual glass
2.0mm coated tempered glass
Frame: Anodized aluminum alloy frame
Weight: 27.5kg
Dimension: 2094×1038×35mm
Packaging: 30pcs per pallet
150pcs per 20'GP
660pcs per 40'HC

Operating Parameters

Operational Temperature: -40℃~+85℃
Power Output Tolerance: 0~+5 W
Voc and Isc Tolerance: ±3%
Maximum System Voltage: DC1500V (IEC/UL)
Maximum Series Fuse Rating: 25A
Nominal Operating Cell Temperature: 45±2℃
Safety Class: Class II
Fire Rating: UL type 3
Bifaciality: Glazing 70±5%

Complete System and Product Certifications

IEC 61215, IEC 61730, UL 61730
ISO 9001:2008: ISO Quality Management System
ISO 14001: 2004: ISO Environment Management System
TS62941: Guideline for module design qualification and type approval
OHSAS 18001: 2007 Occupational Health and Safety

* Specifications subject to technical changes and tests. LONGi Solar reserves the right of interpretation.

Front side performance equivalent to conventional low LID mono PERC:
- High module conversion efficiency (up to 20.9%)
- Better energy yield with excellent low irradiance performance and temperature coefficient
- First year power degradation <2%

Bifacial technology enables additional energy harvesting from rear side (up to 25%)

Glass/glass lamination ensures 30 year product lifetime, with annual power degradation < 0.45%, 1500V compatible to reduce BOS cost

Solid PID resistance ensured by solar cell process optimization and careful module BOM selection

Reduced resistive loss with lower operating current

Higher energy yield with lower operating temperature

Reduced hot spot risk with optimized electrical design and lower operating current

Nolin Hills Wind Power Project

FIGURE B-5

EXAMPLE SOLAR MODULE

UMATILLA COUNTY, OREGON

TETRA TECH

Typical Tracker System – Represented by Array Technologies DuraTrack HZ v3

Source: Array Technologies Inc., 3901 Midway Place NE, Albuquerque, NM 87109 USA, www.arraytechinc.com.

STRUCTURAL & MECHANICAL FEATURES/SPECIFICATIONS	
Tracking Type	Horizontal single axis
Less than 1 drive motor /MW	Up to 1.152 MW DC
String Voltage	Up to 1,500V DC
Maximum Linked Rows	32
Maximum Row Size	100 modules crystalline, and bifacial; 240 modules First Solar 4; 78 modules First Solar 6
Drive Type	Rotating gear drive
Motor Type	2 HP, 3 PH, 480V AC
East-West/North-South Dimensions	Site / module specific
Array Height	54" standard, adjustable (48" min height above grade)
Ground Coverage Ratio (GCR)	Flexible, 28-45% typical, others supported on request
Terrain Flexibility	N-S tolerance: 0-15% standard, 26% optional; Driveline: 40° in all directions
Modules Supported	Most commercially available, including frameless crystalline, thin film, and bifacial
Tracking Range of Motion	± 52° standard, ± 62° optional
Operating Temperature Range	-30°F to 140°F (-34°C to 60°C)
Module Configuration available	Single-in-portrait standard, including bifacial. Four-in-landscape (thin film)
Module Attachment	Single fastener, high-speed mounting clamps with integrated grounding. Traditional rails for crystalline in landscape, custom racking for thin film and frameless crystalline and bifacial per manufacturer specs.
Materials	Pre-galv steel, HDG steel and aluminum structural members, as required
Allowable Wind Load (ASCE 7-10)	140 mph, 3-second gust exposure C
Wind Protection	Failure free passive mechanical system protects against wind damage without the use of complex communications systems, batteries – no power required

ELECTRONIC CONTROLLER FEATURES/SPECIFICATIONS	
Solar Tracking Method	Algorithm with GPS input
Control Electronics	MCU plus Central Controller
Data Feed	MODBUS over Ethernet to SCADA system
Night-time Stow	Yes
Tracking Accuracy	± 2° standard, field adjustable
Backtracking	Yes

INSTALLATION, OPERATION & MAINTENANCE	
Software	SmarTrack optimization available
PE Stamped Structural Calculations & Drawings	Yes
On-site Training and System Commissioning	Yes
Connection Type	Fully bolted connections, no welding
In-field Fabrication Required	No
Dry Slide Bearings and Articulating Driveline Connections	No lubrication required
Scheduled Maintenance	None required
Module Cleaning Compatibility	Robotic, Tractor, Manual

GENERAL	
Annual Power Consumption (kWh per 1 MW)	400 kWh per MW per year, estimate

Nolin Hills Wind Power Project

FIGURE B-6

Typical Single-Axis Tracker System

UMATILLA COUNTY, OREGON

TETRA TECH

Typical Fixed Tilt System – Represented by Sol Components

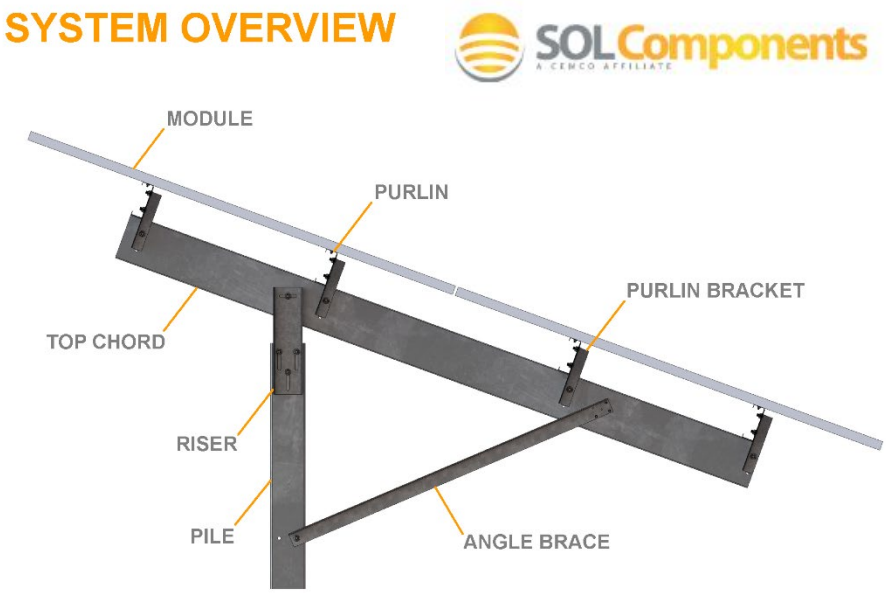

Nolin Hills Wind Power Project

FIGURE B-7

TYPICAL FIXED TILT RACKING SYSTEM

UMATILLA COUNTY, OREGON

TETRA TECH

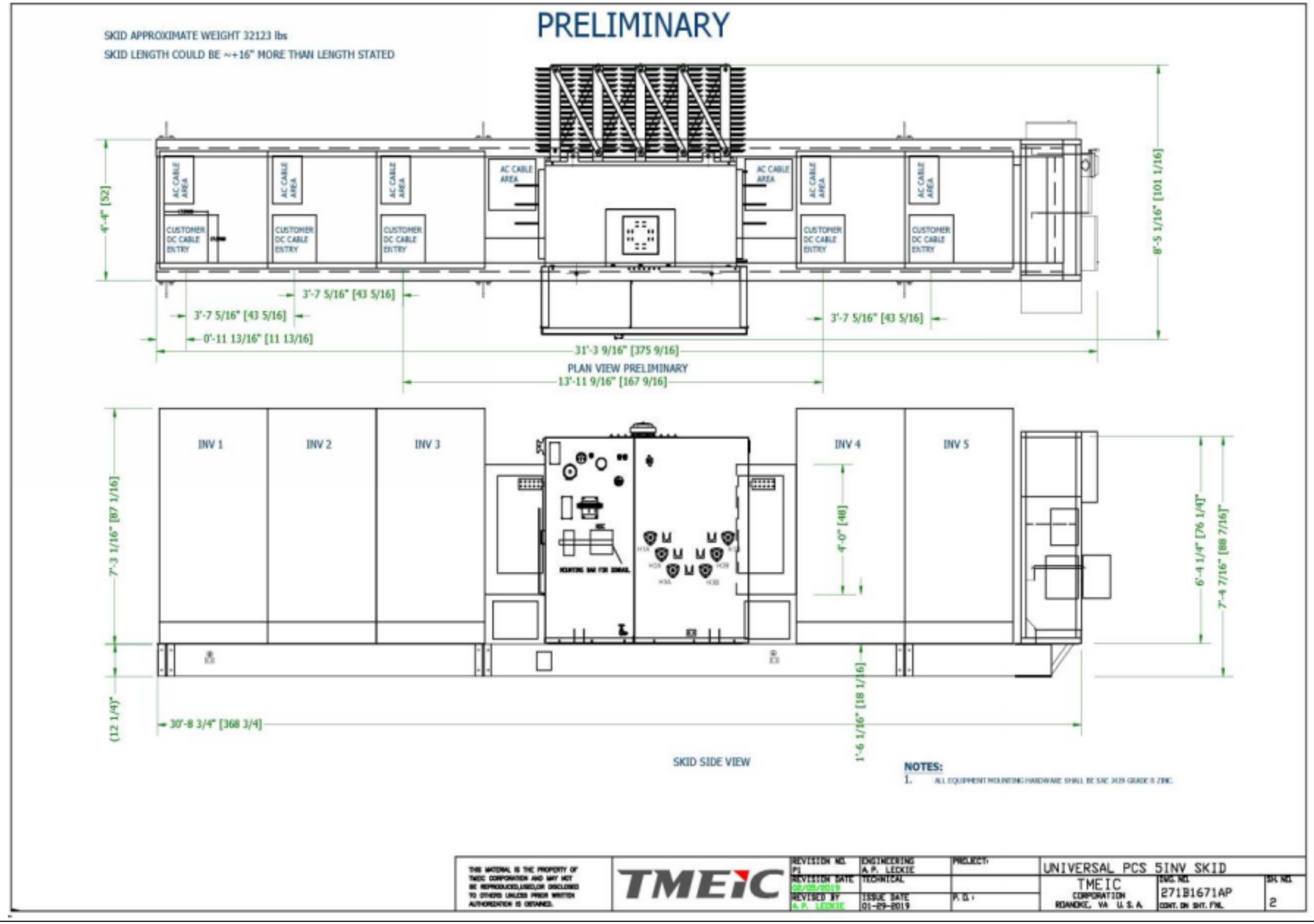

Nolin Hills Wind Power Project

FIGURE B-8

TYPICAL INVERTER/ TRANSFORMER STATION

UMATILLA COUNTY, OREGON

TETRA TECH

Lithium-ion Battery Container System

SAFT Intensium Max 20 High Energy 2 MWh Container

Battery Container

22 ft L x 8 ft W x 9.5 ft H

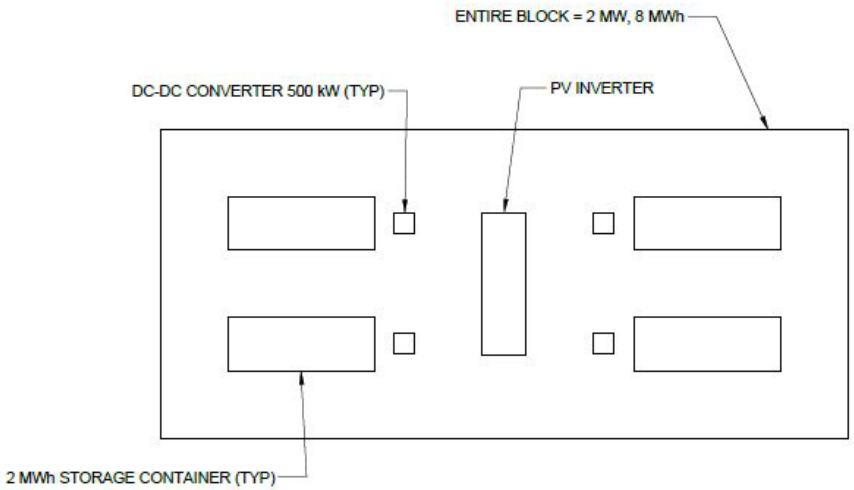

One 2-MW DC Storage Inverter Block

Nolin Hills Wind Power Project

FIGURE B-9

REPRESENTATIVE LITHIUM-ION BATTERY STORAGE SYSTEM

UMATILLA COUNTY, OREGON

TETRA TECH

Flow Battery Containerized System

SUMITOMO ELECTRIC

Battery Cell Container:
20 ft. (250 kW)

Tank Container:
> 40 ft. (6 hr)

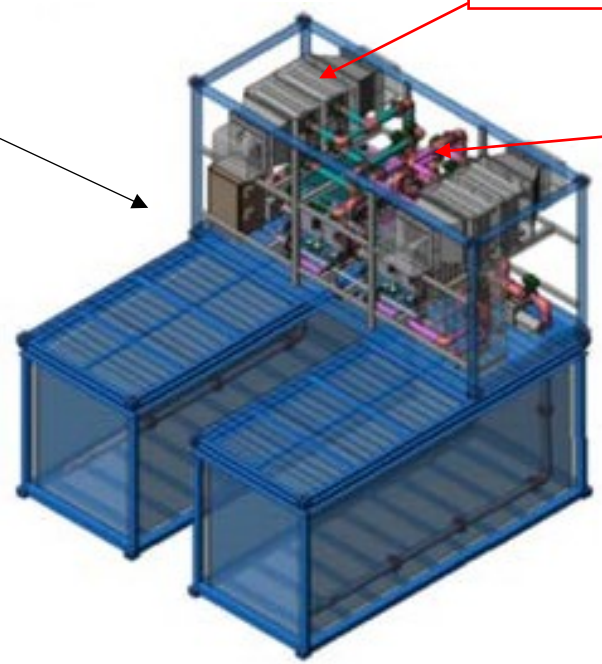

Example Photo

One Flow BESS block

Nolin Hills Wind Power Project

FIGURE B-10

REPRESENTATIVE FLOW BATTERY STORAGE SYSTEM

UMATILLA COUNTY, OREGON

TETRA TECH

220 FT MODEL S3TL SERIES HD SELF SUPPORTING TOWER AT
90 mph WIND + 0.5in ICE PER ANSI/TIA/EIA-222-F-1996
ANTENNA LOADING

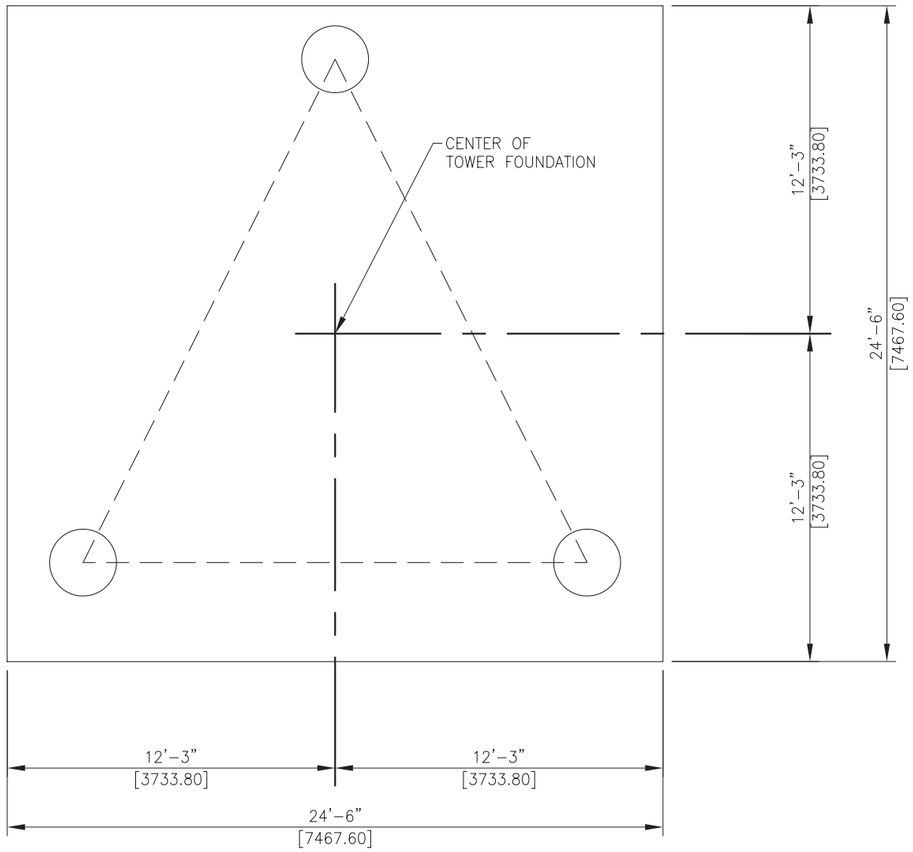

PLAN VIEW

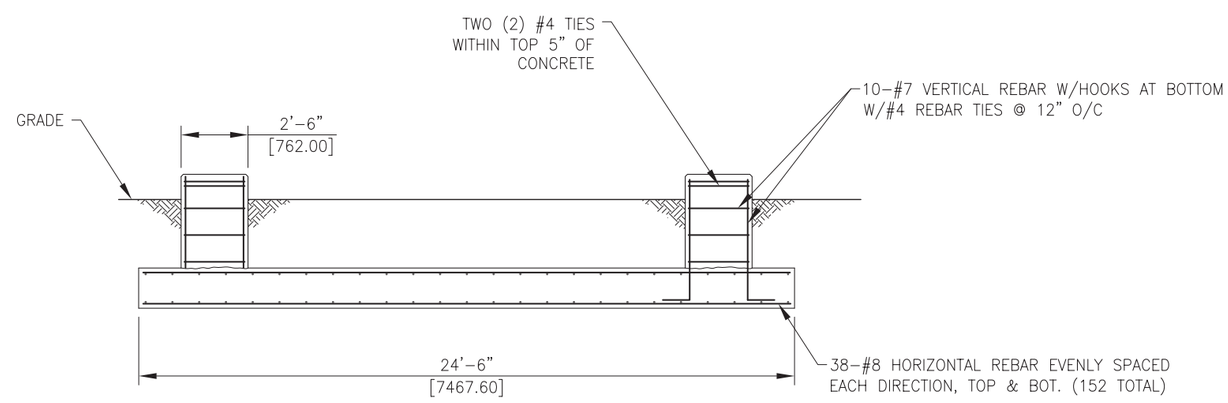

ELEVATION VIEW

(35.53 Cu. YDS)

Nolin Hills Wind Power Project

FIGURE B-11

TYPICAL MET TOWER FOUNDATION

UMATILLA COUNTY, OREGON

NOTES:

1. CONCRETE SHALL HAVE A MINIMUM 28-DAY COMPRESSIVE STRENGTH OF 3000psi, IN ACCORDANCE WITHY ACI 318-05.
2. RABAR TO CONFIRM TO ASTM SPECIFICATION A615 GRADE 60.
3. ALL REBAR TO HAVE A MINUMUM OF 3" CORNER COVER.
4. ALL EXPOSED CONCRETE CORNERS TO BE CHAMPHERED $\frac{3}{4}$"

TETRA TECH