2021 OREGON STANDARD DRAWINGS

Standard Distribution
Date of Issue: July 2020

David Joe Polly, PE
Senior Standards Engineer

This is the July 2020 release of the 2021 Oregon Standard Drawings.

For ODOT Projects the details in the standard drawings will be effective on the **December 1, 2020** bid opening where these drawings are called for in the project plans.

These drawings are for use with projects using the **2021 Oregon Standard Specifications.**

You will notice an "effective date" on the lower right bottom of each Standard Drawing. The bid opening date of a project should be in the effective date window of the drawings. This will ensure the correct drawings are being used on the projects.

Electronic PDF files with the effective date for each drawing are on the Web site at:

http://www.oregon.gov/ODOT/Engineering/Pages/Standards.aspx

The Standard Drawing Baseline Reports for the drawings contain useful information for the designer as well as updates that occur on the drawing. The link to the report is the title of the specific drawing on the webpage.

These Standard Drawings are the ones that have updates:

Drawing Number	Comment
RD302	
RD317	
RD366	
RD367	
RD398	
RD399	
RD404	
RD407	
RD408	
RD437	
RD443	
RD444	
RD700	
RD701	
RD710	
RD711	New Drawing

Drawing Number	Comment
RD721	
RD722	
RD725	
RD730	
RD735	
RD740	
RD745	
RD750	
RD754	Discontinued Drawing
RD755	Discontinued Drawing
RD756	Discontinued Drawing
RD757	Discontinued Drawing
RD758	Discontinued Drawing
RD759	Discontinued Drawing
RD770	Title Change
RD771	Title Change
RD780	New Drawing
RD781	New Drawing
RD782	New Drawing
RD832	New Drawing
RD900	New Drawing
RD901	New Drawing
RD902	New Drawing
RD904	New Drawing
RD905	New Drawing
RD906	New Drawing
RD908	New Drawing
RD910	New Drawing
RD912	New Drawing
RD913	New Drawing
RD916	New Drawing
RD920	New Drawing
RD922	New Drawing
RD930	New Drawing
RD932	New Drawing
RD938	New Drawing
RD940	New Drawing
RD950	New Drawing
RD952	New Drawing
RD960	New Drawing
RD1000	
RD1005	
RD1006	
RD1010	
RD1015	
RD1030	
RD1031	
RD1032	
RD1033	

Drawing Number	Comment
RD1040	
RD1045	
RD1050	
RD1055	
RD1060	
RD1065	
RD1070	
BR115	
BR195	
BR208	
BR222	New Drawing
BR285	
BR400	
RR405	
BR410	
BR415	
BR420	
BR422	
BR445	
BR500	
TM300	
TM301	
TM302	
TM450	
TM452	
TM453	New Drawing
TM454	New Drawing
TM455	Discontinued Drawing
TM456	New Drawing
TM462	
TM463	Discontinued Drawing
TM465	Discontinued Drawing
TM466	New Drawing
TM467	
TM470	
TM471	
TM472	
TM475	Discontinued Drawing
TM482	
TM485	
TM488	Discontinued Drawing
TM492	
TM500	
TM501	
TM502	

Drawing Number	Comment
TM504	New Drawing
TM505	
TM515	
TM516	
TM530	
TM531	
TM539	
TM547	
TM551	
TM560	
TM561	
TM621	
TM622	
TM627	
TM628	
TM650	
TM651	
TM652	
TM653	
TM654	New Drawing
TM655	
TM656	
TM657	
TM658	
TM676	
TM694	
TM800	
TM810	
TM820	
TM821	
TM822	
TM830	
TM831	
TM832	
TM833	
TM840	
TM841	
TM842	
TM843	
TM844	
TM850	
TM851	
TM852	
TM853	
TM860	
TM861	
TM862	
TM870	
TM871	
TM880	

OREGON STANDARD DRAWINGS 2021
NUMBERS AND REVISION DATES

DRAWING NUMBER	REVISION DATE	DRAWING NUMBER	REVISION DATE	DRAWING NUMBER	REVISION DATE
RD100		RD344		RD421	
RD101		RD345		RD435	
RD110		RD346		RD436	
RD115		RD348		RD437	
RD120		RD350		RD438	
RD130		RD352		RD440	
RD140		RD354		RD442	
RD150		RD356		RD443	
RD160		RD358		RD444	
RD170		RD360		RD445	
RD250		RD362		RD450	
RD254		RD363		RD451	
RD255		RD364		RD470	
RD258		RD365		RD471	
RD262		RD366		RD481	
RD266		RD367		RD482	
RD270		RD368		RD500	
RD274		RD370		RD505	
RD278		RD371		RD510	
RD282		RD372		RD515	
RD286		RD373		RD516	
RD300		RD374		RD520	
RD302		RD376		RD526	
RD304		RD378		RD530	
RD306		RD380		RD535	
RD308		RD382		RD545	
RD310		RD384		RD550	
RD312		RD386		RD560	
RD316		RD388		RD570	
RD317		RD390		RD575	
RD318		RD391		RD580	
RD319		RD393		RD581	
RD320		RD398		RD590	
RD321		RD399		RD602	
RD322		RD400		RD610	
RD324		RD401		RD615	
RD325		RD402		RD700	
RD326		RD403		RD701	
RD327		RD404		RD705	
RD328		RD405		RD706	
RD330		RD407		RD707	
RD332		RD408		RD710	
RD334		RD409		RD711	
RD335		RD410		RD715	
RD336		RD412		RD720	
RD338		RD415		RD721	
RD339		RD416		RD722	
RD340		RD417		RD725	
RD342		RD419		RD730	
RD343		RD420		RD735	

OREGON STANDARD DRAWINGS 2021
NUMBERS AND REVISION DATES

DRAWING NUMBER	REVISION DATE	DRAWING NUMBER	REVISION DATE	DRAWING NUMBER	REVISION DATE
RD740		RD1060		BR285	
RD745		RD1065		BR286	
RD750		RD1070		BR290	
RD770				BR291	
RD771				BR300	
RD780		BR115		BR310	
RD781		BR133		BR321	
RD782		BR135		BR325	
RD810		BR136		BR330	
RD815		BR139		BR335	
RD820		BR140		BR340	
RD825		BR141		BR350	
RD830		BR145		BR360	
RD832		BR157		BR365	
RD835		BR165		BR375	
RD840		BR175		BR400	
RD845		BR182		BR405	
RD900		BR190		BR410	
RD901		BR191		BR415	
RD902		BR195		BR420	
RD904		BR200		BR422	
RD905		BR203		BR425	
RD906		BR206		BR430	
RD908		BR207		BR435	
RD910		BR208		BR440	
RD912		BR209		BR445	
RD913		BR212		BR500	
RD916		BR214		BR505	
RD920		BR216		BR520	
RD922		BR220		BR525	
RD930		BR221		BR550	
RD932		BR222		BR705	
RD938		BR223		BR706	
RD940		BR226		BR707	
RD950		BR230		BR708	
RD952		BR233		BR709	
RD960		BR236		BR730	
RD1000		BR240		BR740	
RD1005		BR241		BR750	
RD1006		BR242		BR751	
RD1010		BR245		BR760	
RD1015		BR246		BR800	
RD1030		BR250		BR805	
RD1031		BR253		BR820	
RD1032		BR256		BR825	
RD1033		BR260		BR830	
RD1040		BR263		BR835	
RD1045		BR266		BR840	
RD1050		BR270		BR841	
RD1055		BR273		BR970	

OREGON STANDARD DRAWINGS 2021
NUMBERS AND REVISION DATES

DRAWING NUMBER	REVISION DATE	DRAWING NUMBER	REVISION DATE	DRAWING NUMBER	REVISION DATE
BR971		TM521		TM670	
BR972		TM530		TM671	
		TM531		TM672	
		TM539		TM675	
TM200		TM547		TM676	
TM201		TM551		TM677	
TM204		TM560		TM678	
TM206		TM561		TM679	
TM211		TM570		TM680	
TM212		TM571		TM681	
TM220		TM575		TM687	
TM221		TM576		TM688	
TM222		TM577		TM689	
TM223		TM600		TM690	
TM224		TM601		TM691	
TM225		TM602		TM693	
TM230		TM606		TM694	
TM231		TM607		TM695	
TM232		TM608		TM696	
TM233		TM609		TM697	
TM240		TM610		TM698	
TM300		TM611		TM800	
TM301		TM612		TM810	
TM302		TM614		TM820	
TM450		TM615		TM821	
TM452		TM616		TM822	
TM453		TM617		TM830	
TM454		TM618		TM831	
TM456		TM619		TM832	
TM457		TM620		TM833	
TM460		TM621		TM840	
TM462		TM622		TM841	
TM466		TM623		TM842	
TM467		TM624		TM843	
TM470		TM625		TM844	
TM471		TM626		TM850	
TM472		TM627		TM851	
TM482		TM628		TM852	
TM485		TM629		TM853	
TM492		TM630		TM860	
TM500		TM635		TM861	
TM501		TM650		TM862	
TM502		TM651		TM870	
TM503		TM652		TM871	
TM504		TM653		TM880	
TM505		TM654			
TM515		TM655			
TM516		TM656			
TM517		TM657			
TM520		TM658			

2021 OREGON STANDARD DRAWINGS INDEX

- A -

Access and Ventilation

Hardware for Concrete Box Girders BR135, BR136

Air Release/Air Vacuum Assembly,
Water System RD266, RD270
Anchors, Pipe Slope RD330, RD332
Approaches RD715

- B -

Barricades (Types I, II, & III) TM820

Barrier, Concrete, Median

35” cast-in-place RD590

Barrier, Concrete, Standard (32” Height)

Around Median Obstacle RD535
At Bridge Expansion Joints BR263
Buried in Backslope RD526
Cast-In-Place RD505
Median Barrier Anchoring RD515
Precast RD500
Securing Barrier To Roadway RD516
Terminals RD510
Transition To Bridge Rail RD520
Transition To Guardrail RD530, RD580

Barrier, Concrete, Tall (42” Height)

Around Median Obstacle RD575
Precast RD545
Securing Barrier To Roadway RD516
Transition to Bridge Rail RD550
Transition To Standard Barrier RD560
Transition To Guardrail RD570, RD581
Barrier, Metal Median RD400, RD405, RD408
Bollards RD130, RD255

Box Culvert, Concrete

Cast-in-place BR820, BR825, BR830, BR835
Double Box Culverts BR840, BR841
Extensions BR805
Modified Type 2A Guardrail BR266
Wingwalls BR800

Boxes

Trapezoidal Box Reinforcement BR133

Bridge End Panel BR165

Bridge Concrete Parapet

32” Vertical BR221
42” Vertical BR222
With Steel Post BR214

Bridge Preservation

Concrete Repair BR500
General Cathodic Protection BR520
Reinforcement Continuity BR525
Reinforcing Bar Repair BR505
Rivet Replacement BR550

Bridge Rail

2-Tube Curb Mount	BR206, BR207
2-Tube Side Mount	BR226, BR230
3-Tube Curb Mount	BR208, BR209
Combination	BR223
Concrete Post and Beam	BR212
Flush Mount Combination	BR220
Pedestrian	BR246
Pedestrian On Sidewalk Mount Parapet	BR250
Sidewalk Mount Combination	BR216
Sidewalk Mount Parapet with Chain Link Fence	BR253
Thrie Beam	BR233
Thrie Beam Retrofit	BR273
Trailing End Connection To Guardrail	BR236
Transition From Guardrail	BR270
Transition To Guardrail	BR203
Transition To Guardrail, 3'-6" Height	BR291
Type F	BR200
Type F 3'-6" Height	BR290
Type F with Chain Link	BR260
Type F with Pedestrian Rail	BR256
Type F with Rectangular Tube	BR285, BR286

- C -

Cathodic Protection, General	BR520

Cattle Guard

Painted	RD110
Steel Tube	BR175
Cattle Pass	RD110
Check Dams	RD1005, RD1006

Concrete Pavement

Plain Dowelled	RD600
Reinforced	RD600
Concrete Repair, Bridge	BR500
Concrete Truck Wash Out	RD1070
Construction Entrances	RD1000
Coupling Bands for Corrugated Metal Pipe	RD325, RD326, RD327
Cross Slopes, Roadway Superelevations	RD140
Crosswalk Closure	TM240
Curb Inlets	RD366
Curbs, Various Types	RD700, RD170
Drainage	RD701
Curb Ramp	
Blended Transition	RD940
Combination	RD930, RD932, RD938
Components	RD900
Corner Identification	RD901
Detectable Warning Surface	RD902, RD904, RD905 RD906, RD908
End of Walk	RD950, RD952
Parallel	RD920, RD922
Perpendicular	RD910, RD912, RD913, RD916
Unique	RD960
Cutbanks, Rounding	RD150

-D-

Delineators

Installation	
Freeways	TM575

Non-Freeway TM576
Special Applications TM577
Layout And Posts Types TM570
Steel Post Details TM571

Detectable Warning Devices RD902, RD904, RD905, RD906, RD908

Drainage Details

Bore Casing RD308
Concrete Encasement, Cradle, And Cap RD306
Locator Post RD334
Street Cut RD302
Trench Backfill RD300
Gutter Transition At Inlet RD363

Driveways

Curb Line Sidewalk RD730, RD735 RD745, RD750
Non-Sidewalk RD715
Separated Sidewalk RD725, RD740

-E-

End Pieces, Guardrail RD415, RD417
Energy Dissipater RD1045, RD1050

Erosion Control

Check Dams RD1005, RD1006
Concrete Truck Wash Out RD1070
Construction Entrances RD1000
Energy Dissipater RD1045, RD1050
Inlet Protection RD1010, RD1015
Matting RD1055
Scour Basin, Temporary RD1050
Sediment Barrier RD1030, RD1031, RD1032, RD1033
Sediment Fence RD1040
Sediment Trap RD1065
Slope Drains, Temporary RD1045
Tire Wash Facility RD1060

Expansion Joints, Bridge BR139, BR140, BR141, BR145

-F-

Feathering A.C. Over Existing Pavement RD610

Fences

Barbed & Woven Wire (Types 1, 1-5W And 2) RD810
Chain Link RD815
Gates RD820
Pedestrian RD780, RD781, RD782
Protective BR240, BR241, BR242, BR245
Snow, Metal RD825
Wildlife RD830, RD832, RD835, RD840, RD845

Field Marker, Storm Water Treatment And Storage Facilities RD399
Flag Board Mounting Details TM204

-G-

Gates, Fence RD820, RD832
Gateway RD810

Girders

Precast Prestressed Boxes BR425, BR430, BR435, BR440, BR445
Bulb-I BR300
Bulb-T BR310, BR360, BR365, BR375
BT90 And BT96 BR321
Temporary Diaphragm Beam BR350
Type II BR325
Type III BR330
Type IV BR335
Type V BR340

Grade Crossing, Railroad RD445

Grate

Inlets RD365, RD378
Manhole RD356

Guardrail

29” Rail Height See *Guardrail - 29” Rail Height*

31” Rail Height See *Midwest Guardrail system*

Anchors, Steel
(Types 1 And 1 Mod.) RD450
Bridges/Rails (See Rails)
Installation At Railroad Crossing RD445
Posts, Wood Breakaway RD451
Thrie Beam RD409, RD410

Guardrail - 29” Rail Height

Adjustment RD400
Assembly Details RD400
Blocks RD405
End Pieces, Types B And C RD415
Guardrail and Transitions RD400, RD481 RD530, RD570
Installation At Bridge Ends RD440
Over Low-Fill Culverts RD470
Parts RD415
Posts RD405
Terminals, Bridges RD440
Terminals, Cut And False Cut RD435
Types 1, 2A, 3 & 4 RD400

Guardrail – 31” Rail Height

See *Midwest Guardrail system*

Guide Posts (See Delineators)
Gutter Transition At Inlet RD363

-H-

Handrail
Metal RD770, RD771

Stairway RD120
Hydrant Installation RD254

-I-

ID Marker, Culvert RD398
ID Marker, Bridge BR195
Illumination TM300, TM301
TM302

Inlets
Adjusting Existing RD376
Concrete Cap RD376
Concrete Type CG-3 RD371, RD372,
RD373
Concrete Types G, & G-2M RD364
Concrete Types CG RD366
Curb Inlet Channel RD367
Concrete Types M-E, M-O, And B RD368
Ditch, Type D RD370
Field or Area Drainage Basin RD374
Frames and Grates RD365
Pipe to Structure Connections RD339
Slotted CMP Drain RD328
Type 3 RD378

Inlet Protection RD1010, RD1015

Islands
Accessible Route RD710
Accessible Route Channelized RD711
Traffic RD705
Nose Treatments RD707

-J-

Joint Seal, Asphaltic Plug BR157
Also see Expansion Joints, Bridge

-L-

Locator Post RD334

Luminaire Poles
Breakaway Location Guidelines TM635
Fixed and Slip Base Supports TM629, TM630
Mounting On Structures BR970, BR971, BR972

Lifeline, Fall Arrest BR190, BR191

-M-

Mail Box Support RD100
Mail Box Installation RD101

Manhole, Concrete
24” Manhole RD343
Base, Cast-In-Place And Precast RD344
Carry Through, Storm Sewer RD354
Cover and Frame RD356
Grate RD356
Frame Adjustment RD360

Inside Drop, Sanitary RD350
Outside Drop RD352
Pipe to Manhole Connections RD345
Precast, Large RD346
Precast, Pollution Control RD340
Precast, Sanitary Sewer RD338
Precast, Storm Sewer RD335
Shallow RD342
Slope Protector RD358
Steps RD336
With Inlet RD348

Matting RD1055

Median Barrier, Metal

Barrier and Transitions RD400, RD408, RD481, RD530, RD570 RD580, RD581
Assembly Details RD400, RD408
Blocks RD403, RD404, RD405
Bridge Deck Expansion Joint RD400, RD412
Parts RD415, RD416, RD417
Posts RD403, RD404, RD405

Median and Shoulder Barriers, Concrete

Anchoring RD515
Cast-In-Place RD505
Precast RD500
Securing Barrier To Roadway RD516
Terminals RD510

Meter Assembly, Water System RD278
Milepost Signing Details TM221, TM222
Moment Slab on MSE Wall BR760
Monument Box RD115
Multi-Use Path RD602

Midwest Guardrail System

Adjustment RD401
Assembly Details RD407, RD408
Blocks RD403, RD404
Bridges/Rails (See Rails)
Buried in Backslope RD436, RD437
End Pieces, Types B and C RD417
Guardrail and Transitions RD412, RD482 RD580, RD581
Height Conversion RD481
Over Low-Fill Culverts RD471
Parts RD416, RD417
Posts RD403, RD404

Terminals, Bridges RD442
Terminals, Buried in Backslope RD436, RD437
Terminals, Downstream Anchor RD438
Terminals, Energy Absorbing RD420, RD421
Terminals, Grading RD419
Transition to Bridge Rail BR270

Types RD402
Metal Median Barrier RD408
Thrie beam RD409, RD410
W-beam RD407, RD482

Typical Layouts
At Bridge Ends RD442
For Embankments RD443
For Fixed Objects RD444

-P-

Pavement

Asphalt Pavement Details	RD610, RD615
Multi-Layer Construction	RD615

Pavement Markings

Alignment Layout	TM560, TM561
Durable Markings	TM520, TM521
Freeway Ramp	TM547, TM551
Intersection	TM530
High Performance Markings	TM521
Left Turn and Median	TM539
Railroad Crossing	TM505
Raised Marking Details	TM515, TM516
Recessed Marking Details	TM517
Standard Details Blocks	TM500, TM501, TM502, TM503, TM504, TM510
Turn Arrow	TM531

Pedestrian

Aluminum Fence	RD780, RR781, RD782
Metal Handrail	RD770, RD771

Pipe

Backfill/Compaction Details	RD300, RD304
Connection Details, Unlike Pipe	RD325, RD326, RD327
Corrugated Metal Coupling Bands	RD325, RD326, RD327
Culvert Embankment Protection	RD317
Culvert ID Marker	RD398
Miscellaneous Culvert Details	RD319
Multiple Installations	RD300
Paved End Slopes	RD320
Paved End Slopes With Removable Safety Bars	RD321
Safety End Sections, Concrete Pipe	RD324
Safety End Sections, Metal Pipe	RD322
Skew Diagram	RD316
Slope Anchors	RD330, RD332
Sloped Ends, Concrete Pipe	RD318
Sloped Ends, Metal Pipe	RD316
Slotted Drain, Metal Pipe (CMP)	RD328

Pipe Fill Height Tables

Concrete	RD386
Corrugated HDPE	RD390
Metal, Arch	RD382
Metal, Round	RD380
Metal, Spiral Rib	RD384
Polypropylene	RD393
Poly Vinyl Chloride (PVC)	RD388
Reinforced HDPE	RD391

Poles

Luminaire Fixed and Slip Base Supports	TM629, TM630
Traffic Signals	TM650, TM651, TM652 TM653,TM654
Portable Barricade	TM820

-R-

Railroad At Grade Crossing	RD445
Ramp, Sidewalk	RD910, RD920, RD930, RD940, RD950, RD960
Reinforcement Continuity	BR525

Reinforcing Bar Repair BR505
Rivet Replacement BR550
Roadway Cross Slopes
Superelevated Sections RD140
Rounding Of Cutbanks RD150
Root Barrier, Water Pipe RD286
Roundabout Curb Placement RD170

-S-

Safety Edge RD615

Sanitary Sewer
Clean Out RD362
Manhole RD338
Piped Inside Drop Connection RD350
Sampling Station, Water System RD282
Sanitary Sewer,
Service Connections RD310

Scour Basin, Temporary RD1050
Sediment Barrier RD1030, RD1031, RD1032, RD1033
Sediment Fence RD1040
Sediment Trap RD1065
Sidewalk RD720, RD721, RD722

Signs
Aluminum Panel TM675
Attachment TM676
Bracing Details TM206
Directional Sign Layout TM223, TM224
Exit TM225
Flag Board Mounting Details TM204
Installation Details TM200, TM201
Mileposts TM221, TM222
Mounts TM677, TM678, TM679
Multi-Post Installations TM220
Removable Legend
Mounting Details TM230, TM231, TM232, TM233

Signs Con't
Route Makers
Interstate Route Shields TM211
Oregon Highways TM212
U.S. Route Shields TM211

Sign Supports
Breakaway Location Guidelines TM635
Cantilever TM621, TM622, TM623, TM624, TM625, TM626, TM627, TM628, TM690, TM691
Multi-Post Breakaway TM600, TM601
Sign Bridge TM614, TM615, TM616, TM617, TM618, TM619, TM620, TM693, TM694, TM695, TM696, TM697
Square Tube TM681, TM687, TM688, TM689
Temporary TM822
Triangular Base Breakaway TM602
Variable Message Sign TM606, TM607, TM608, TM609, TM610, TM611, TM612, TM621, TM622, TM623, TM624, TM625, TM626, TM627, TM628, TM690, TM691, TM693,

	TM694, TM695, TM696, TM697
Wood Post	TM670
Service Connection, Water System	RD274
Siphon Box	RD376
Slabs, Precast Prestressed	BR400, BR405, BR410, BR415, BR420, BR422, BR445

Slope

Drains, Temporary	RD1045
Paving	BR115
Pipe Anchors	RD330, RD332
Protector, Concrete Manhole	RD358
Rounding	RD150
Slotted Drains, Metal Pipe (CMP)	RD328
Snow Fence, Metal	RD825

Soundwalls

Masonry (Pile Footing)	BR750, BR751
Masonry (Spread Footing)	BR730
Precast Concrete	BR740
Stairway, Concrete	RD120
Steps, Manhole Precast	RD336
Stop Lane, Truck And Bus At Railroad Crossing	RD445
Storm Water Treatment and Storage Facility Field Marker	RD399
Street Cut	RD302
Subsurface Drain	RD312

-T-

Temporary Traffic Control

2-Lane, 2-Way Roadways	TM850
Abrupt Edge	TM800
Barricades	TM820
Blasting Zones	TM871
Bridge Construction	TM870
Closure Details	TM840
Concrete Barrier	TM830
Freeway Sections	TM860, TM861, TM862
Impact Attenuator	TM831, TM832, TM833
Intersection Work Zones	TM841, TM842, TM843
Message Sign	TM800
Non-Freeway Multi-Lane Sections	TM851, TM852, TM853
Pedestrian Accessible Routing	TM844
Reflective Pavement Makers	TM810
Rumble Strips	TM830
Sign Supports	TM689, TM821
Speed Reduction (Moving Operations)	TM880
Tables, Flare Rate, Taper, Spacing	TM800
Temporary Sign Support	TM822
Thrust Blocking, Water Systems	RD250
Tire Wash Facility	RD1060

Traffic

Island	RD705
Separator, Concrete	RD706

Traffic Signals

Color Code Chart	TM470
Controller Cabinet and Foundation	TM482
Fire Preemption Details	TM456
Junction Boxes	TM472
Maintenance Pad Details	RD160
Mast Arm Pole Details	TM450
Mounting Details	
Adjustable Signal Head	TM462
Spanwire	TM456
Pedestrian Signal	TM457, TM467
Pole Footing Details	
Mast Arm Pole	TM450
Strain Pole	TM452
Pole Mounts	TM680
Ramp Meter Details	TM492
Service Cabinet	TM485
Spanwire Design	TM456
Strain Pole Details	TM452
Supports	TM650, TM651, TM652, TM653, TM654, TM655, TM656, TM657, TM658
Temporary	TM453, TM454, TM456
Trenching & Conduit Installation	TM471
Vehicle Signal Details	TM460
Vehicle Signal Pedestal	TM457
Trench Backfill	RD300
Truck Aprons on Roundabouts	RD170
Trucks and Bus Stop Lanes	
At Railroad Crossing	RD445
Truck Scale Pit	BR182
Truncated Dome	RD902

-V-

Valve Box And Operator Extension Assembly	RD258
VMS Walk-In Bridge	TM698

-W-

Walls

Retaining, Concrete	BR705, BR706, BR707, BR708, BR709
Soundwall, Masonry	
Pile Footing	BR750, BR751
Spread Footing	BR730
Soundwall, Precast	BR740

Water Systems

Air Release Assembly, Manual	RD266
Air Release/Air Vacuum Valve Assembly	RD270
Hydrant Installation	RD254
Main Dead-End Blowoff Assembly	RD262
Root Barrier	RD286
Thrust Blocking	RD250
Valve Box And Operator Extension Assembly	RD258
Water Meter Assembly	RD278
Water Sampling Station	RD282
Water Service Connection	RD274
Wingwalls, Concrete Box Culverts	BR800
Wind Pressure Map	TM671
Wind Speed Map	TM672

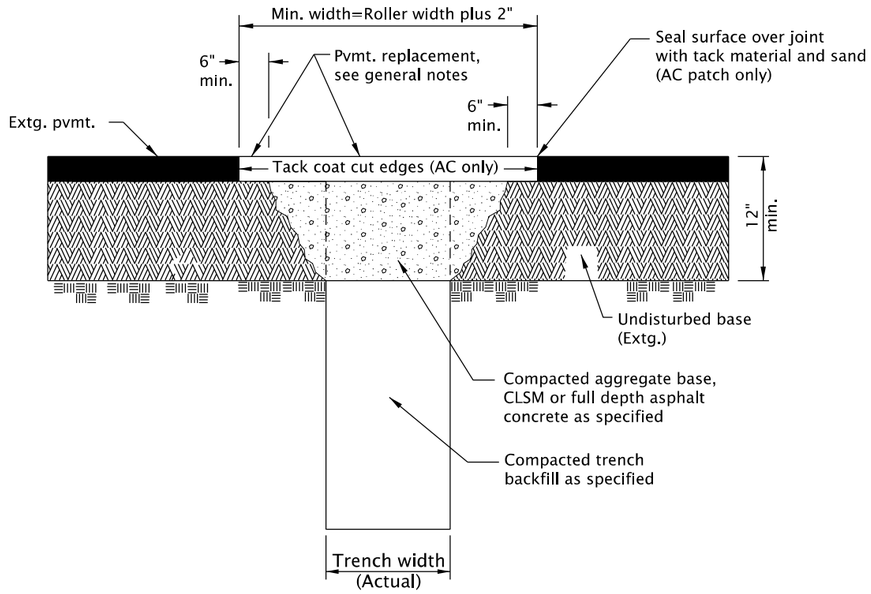

GENERAL NOTES FOR ALL DETAILS ON THIS SHEET:

1. All existing AC or PCC pavement shall be sawcut prior to repaving.
2. Concrete pavement shall be replaced with concrete to a minimum thickness of 8" or to the thickness of removed pavement, whichever is greater.
3. For joining new concrete to existing concrete, see contract plans for sepecific details.
4. Place AC mix minimum thkn. of 6" or the thkn. of the removed pavement, whichever is greater. Compact as specified.

CALC. BOOK NO. N/A

SDR DATE 12-JUN-2008

NOTE: All material and workmanship shall be in accordance with the current Oregon Standard Specifications

The selection and use of this Standard Drawing, while designed in accordance with generally accepted engineering principles and practices, is the sole responsibility of the user and should not be used without consulting a Registered Professional Engineer.

OREGON STANDARD DRAWINGS

STREET CUT

2021

DATE	REVISION DESCRIPTION

rd302.dgn 20-JUL-2020

RD302

Effective Date: December 1, 2020 - May 31, 2021

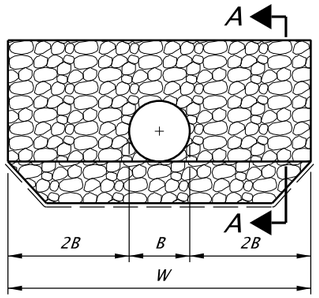

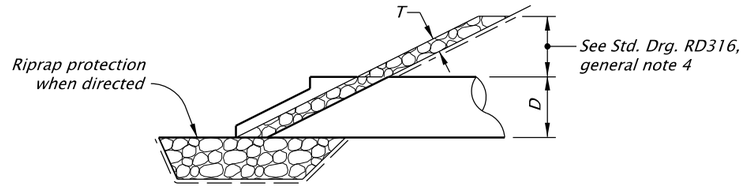

SECTION A-A

SLOPED OR PROJECTING END

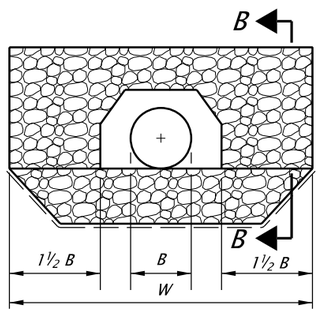

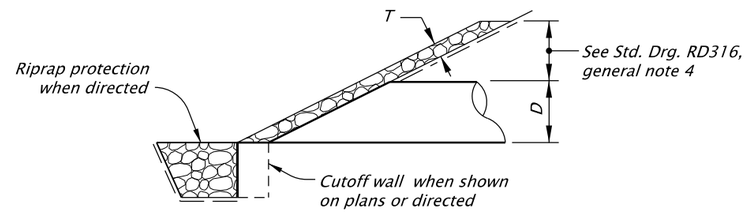

SECTION B-B

SLOPED END WITH SLOPE PAVING

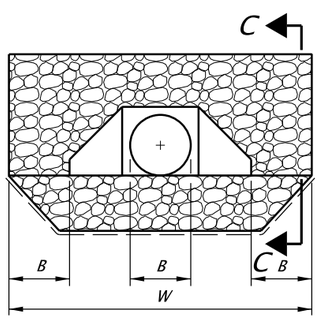

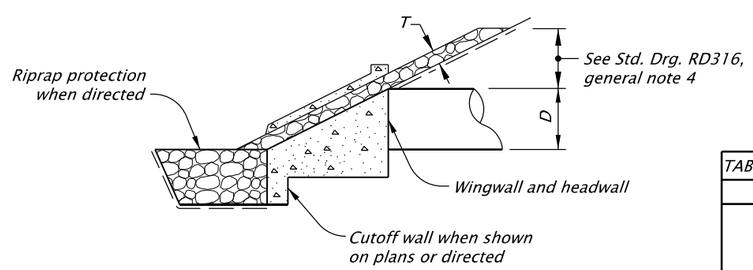

SECTION C-C

HEADWALL AND WINGWALLS

B = Diameter of circular barrel or span of arch pipe, box, or open-bottom arch.
D = Diameter of circular barrel or rise of arch pipe, box, or open-bottom arch.
T = Thickness of riprap blanket, see Table A.

EMBANKMENT PROTECTION

TABLE A - Embankment Slope Protection	
Riprap Class	T Distance
50	12 Inches
100	18 Inches
200	24 Inches *
700	36 Inches *

* Riprap backing required between riprap and embankment

TABLE B - Riprap Pad Dimensions		
Riprap Class	L * (ft)	T (ft)
50	4B or 1.3	2.3
100	4B or 1.6	3.3
200	4B or 2.0	4.3
700	4B or 3.3	5.6

* L is the greater of 4B or the listed dimension.

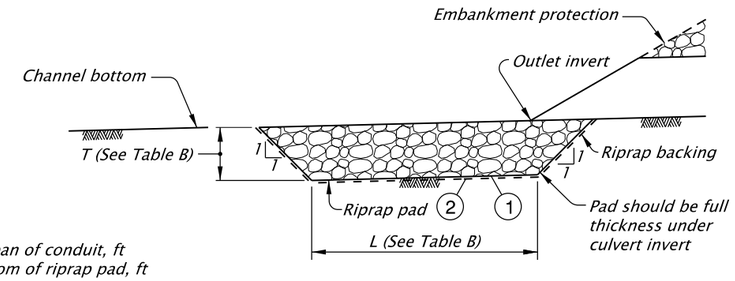

B = Diameter or span of conduit, ft
L = Length of bottom of riprap pad, ft
T = Thickness of riprap pad, ft
W= Width of top of riprap pad, ft

a) Riprap pad without cutoff wall, elevation view

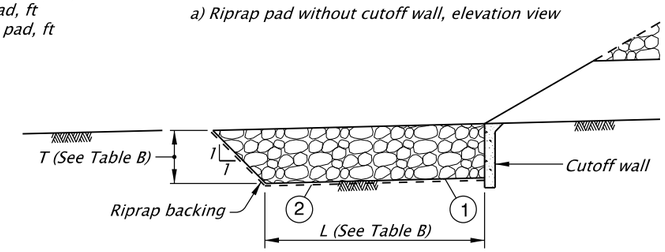

b) Riprap pad with cutoff wall, elevation view

RIPRAP PAD NOTES:

1. Do not excavate non-erodible rock in order to place riprap.
2. Use riprap backing under Class 200 and Class 700 loose riprap.
3. Top width (W) of the riprap pad is the larger of 5B or the width of the embankment slope protection.

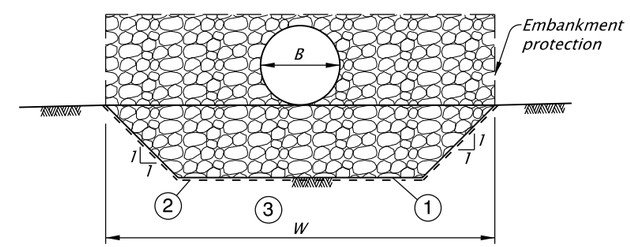

c) Riprap pad, end view

RIPRAP PADS

GENERAL NOTES FOR ALL DETAILS:

1. See Std. Drg's. RD300 & RD304 for installation details.
2. Open ends of pipes normally require a site specific design, and may require special treatment (sloped ends, culvert embankment protection, paved end slopes, safety end sections, or other measures).
   See special details or Standard Drawings as called for on plans.

CALC. BOOK NO. N/A

SDR DATE 01-July-2020

NOTE: All material and workmanship shall be in accordance with the current Oregon Standard Specifications

The selection and use of this Standard Drawing, while designed in accordance with generally accepted engineering principles and practices, is the sole responsibility of the user and should not be used without consulting a Registered Professional Engineer.

OREGON STANDARD DRAWINGS

CULVERT EMBANKMENT PROTECTION and RIPRAP PADS

2021

DATE	REVISION DESCRIPTION

rd317.dgn 07-01-2020

RD317

Effective Date: December 1, 2020 - May 31, 2021

GENERAL NOTES FOR ALL DETAILS ON THIS SHEET:

1. Where precast inlets are used as an alternate to cast-in-place inlets, a 4" compacted leveling bed of sand or ¼"-0 crushed aggregate shall be provided. All precast inlets shall conform to requirements of ASTM C913.
2. Graphics show CG-1 inlet with Type 2 grate. See Table A for inlet dimensions. Type 1 grate allowed only in locations not subject to bicycle or pedestrian use. For frame and grate details, see Std. Dwg. RD365.
3. Provide sump only where shown on plans, and allowed by jurisdiction. See Detail B for inlet without sump.
4. For curb details, see Std. Dwgs. RD700 & RD701.
5. See Std. Dwg. RD336 for tracer wire details, or approved alternate.
6. Max. pipe diameter varies with pipe material.
7. Location, elevation, diameter, slope, and number of pipe(s) varies, see project plans.
8. All concrete shall be commercial grade concrete.
9. ¾" preformed filler (in concrete pavement or gutter only) to extend through thickness of concrete.
10. See Std. Dwg. RD363 for gutter transition section, when curb and gutter are required. (Pay limit for inlet is expanded when curb and gutter are monolithic)
11. See Std. Dwg. RD339 for pipe to structure connections.

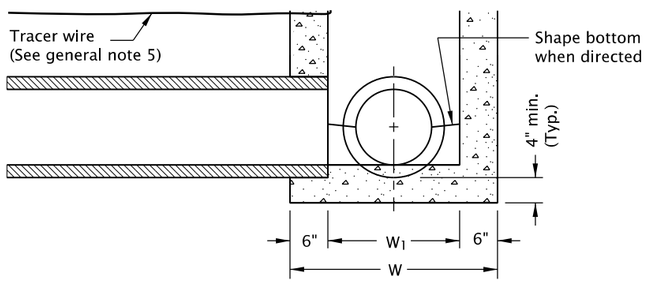

DETAIL B WITH-OUT SUMP

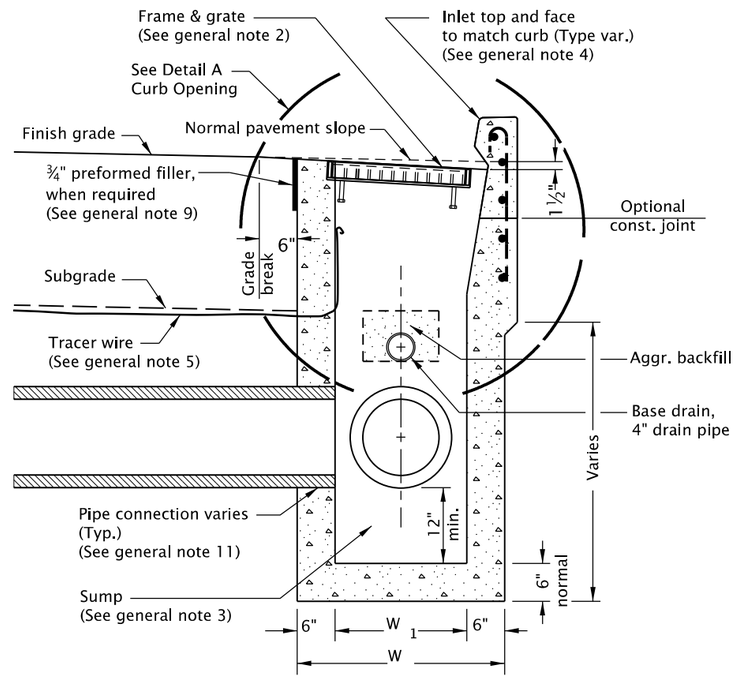

SECTION B - B

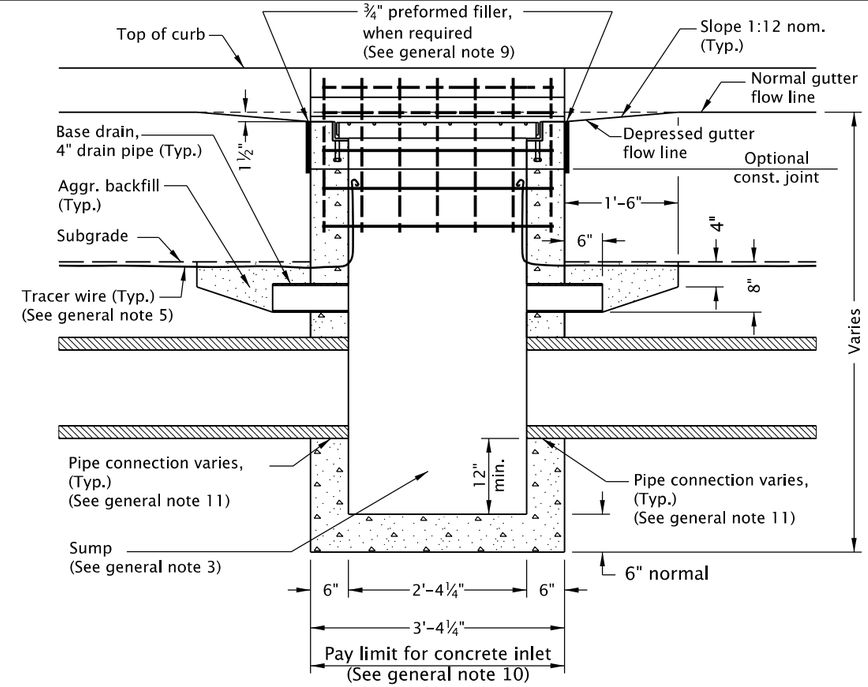

SECTION A - A

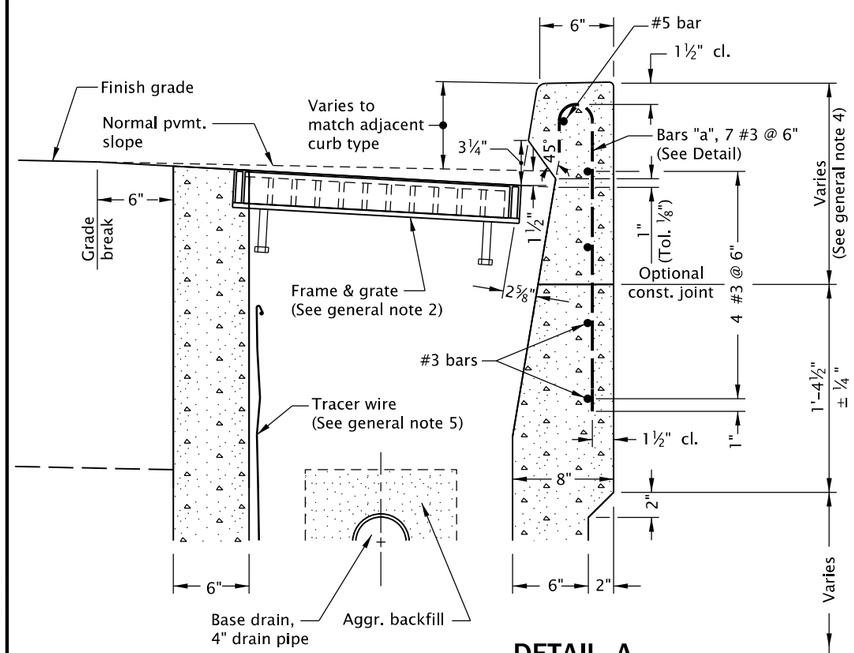

NOTE:
Use details shown on Std. Dwg. RD367 when curb inlet channels are used.

DETAIL A
CURB OPENING

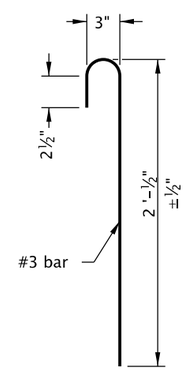

BAR "a" DETAILS

TABLE A		
INLET TYPE	W	W_1
CG-1	2'-8⅞"	1'-8⅞"
CG-2	3'-3⅜"	2'-3⅜"

NOTES:

1. #3 "a" bars to be placed during curb construction.
2. All bars to be placed 1½" clear of nearest face of concrete unless shown or noted otherwise.
3. All bars shall be full length.

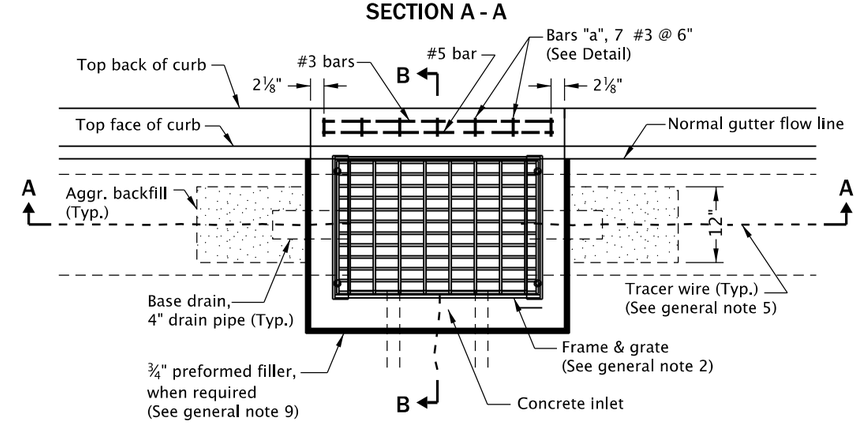

PLAN

CALC. BOOK NO. N/A

SDR DATE 20-JUL-2020

NOTE: All material and workmanship shall be in accordance with the current Oregon Standard Specifications

The selection and use of this Standard Drawing, while designed in accordance with generally accepted engineering principles and practices, is the sole responsibility of the user and should not be used without consulting a Registered Professional Engineer.

OREGON STANDARD DRAWINGS

CONCRETE INLETS
TYPE CG-1, CG-2

2021

DATE	REVISION DESCRIPTION

rd366.dgn 20-JUL-2020

RD366

Effective Date: December 1, 2020 - May 31, 2021

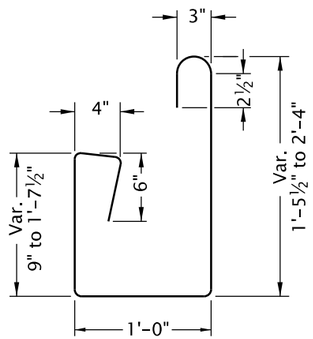

#3 "b" BAR

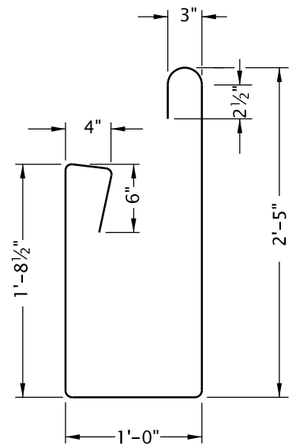

#4 "b" BAR

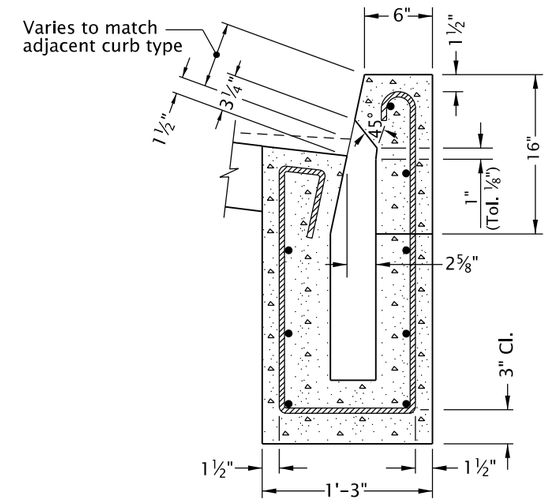

DETAIL A
CURB OPENING

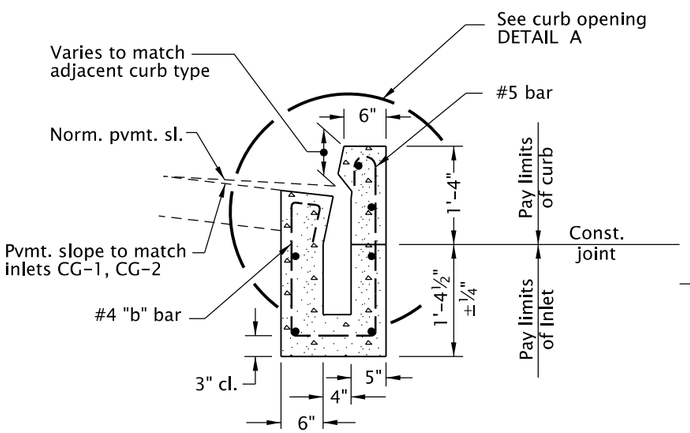

SECTION B-B

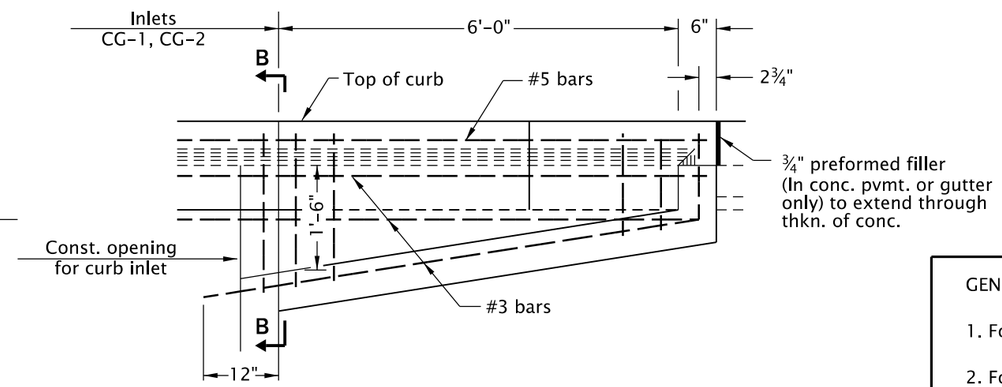

SECTION A-A

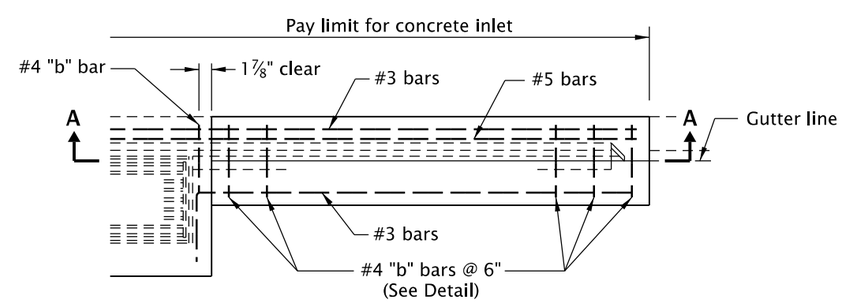

PLAN

NOTES:
1. #4 "b" bar replaces #3 "a" bar of type CG-1 and CG-2 inlets.
2. #4 & #3 "b" bars to be placed during curb construction.
3. All bars to be placed 1½" clear of nearest face of concrete unless shown or noted otherwise.
4. All bar splices shall be 20 dia.

GENERAL NOTES FOR ALL DETAILS ON THIS SHEET:

1. For inlet details, see appropriate inlet standard drawing(s).
2. For frame and grate details, see Std. Dwg. RD365.
3. For curb details, see Std. Dwgs. RD700 & RD701.
4. All concrete shall be commercial grade concrete.

CALC. BOOK NO. N/A

SDR DATE 20-JUL-2020

NOTE: All material and workmanship shall be in accordance with the current Oregon Standard Specifications

The selection and use of this Standard Drawing, while designed in accordance with generally accepted engineering principles and practices, is the sole responsibility of the user and should not be used without consulting a Registered Professional Engineer.

OREGON STANDARD DRAWINGS

CURB INLET CHANNEL

2021

DATE	REVISION DESCRIPTION

rd367.dgn 20-JUL-2020

RD367

Effective Date: December 1, 2020 - May 31, 2021

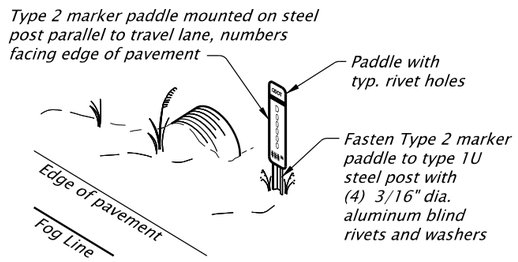

SINGLE DRAINAGE FACILITY SINGLE PIPE

(See Note 8)

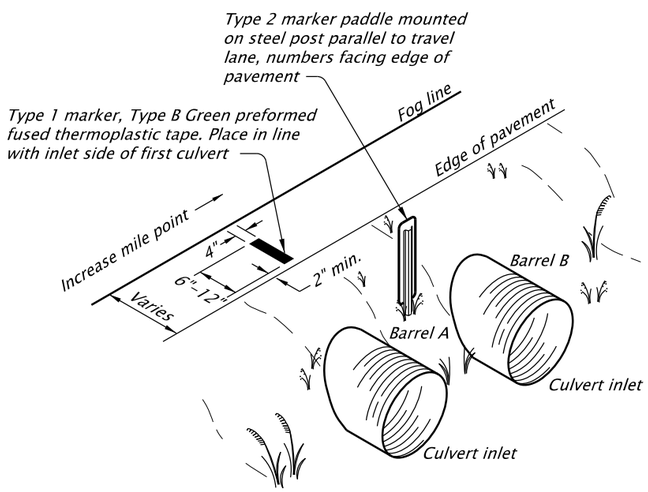

SINGLE DRAINAGE FACILITY MULTIPLE PIPES

(See Note 8)

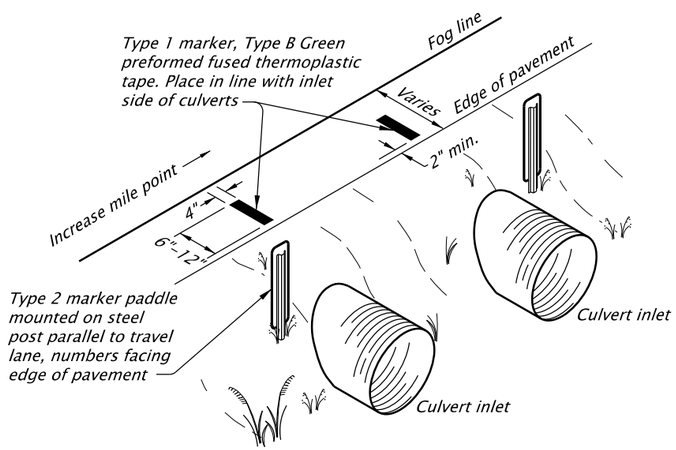

MULTIPLE DRAINAGE FACILITY

(See Note 8)

TYPE 2 MARKER INSTALLATION

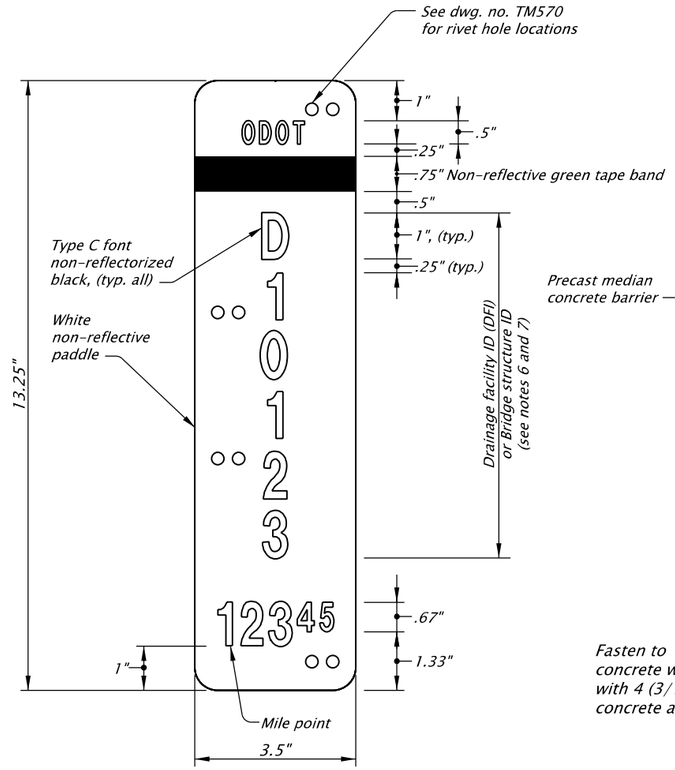

TYPE 2 MARKER

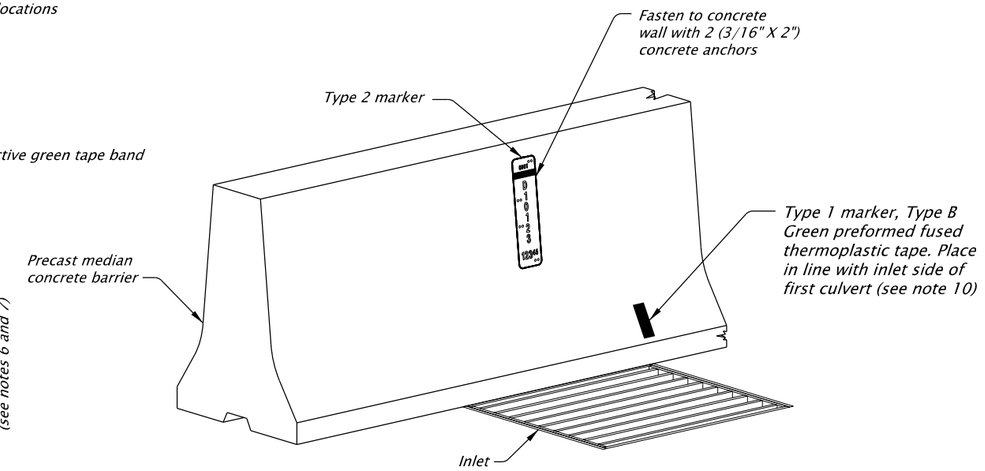

CONCRETE BARRIER INSTALLATION

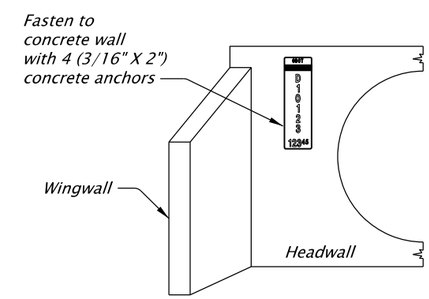

CONCRETE HEADWALL INSTALLATION

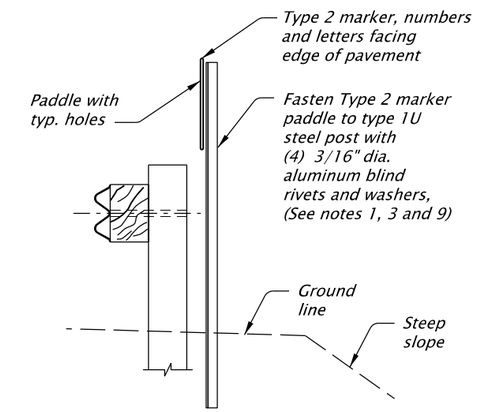

GUARDRAIL INSTALLATION

NOTES:

1. See Standard Drawing TM571 for 'Type 1U Steel Post Dimensions' details.
2. Place Type 1 marker on inlet edge of the pavement directly in line with the inlet.
3. Install Type 2 culvert markers parallel to travel lane and inconspicuous to traffic.
4. On non-divided highways place markers only at the culvert inlet side of highway.
5. On divided highways placing markers on the outlet side is optional.
6. Drainage Facility ID: Place the assigned DFI number on the Type 2 marker when the culvert span is less than 6 feet. (Example D10123).
7. Bridge Structure ID: Place the assigned ID number on the Type 2 marker when the culvert has a span between 6 feet and 20 feet. (Example 01234A).
8. Contact the Senior Culvert Engineer or the Senior Culvert Maintenance Engineer in the Hydraulics Unit at the TLC for more information regarding Single Drainage Facilities and Multiple Drainage Facilities.
9. Steep slopes where guardrail or concrete barrier are present, install Type 2 marker on slope side of barrier.
10. Install only a Type 1 marker or a Type 2 marker on concrete barrier.

CALC. BOOK NO. N/A

SDR DATE 01-July-2020

NOTE: All material and workmanship shall be in accordance with the current Oregon Standard Specifications

The selection and use of this Standard Drawing, while designed in accordance with generally accepted engineering principles and practices, is the sole responsibility of the user and should not be used without consulting a Registered Professional Engineer.

OREGON STANDARD DRAWINGS

CULVERT ID MARKER

2021

DATE	REVISION DESCRIPTION

Effective Date: December 1, 2020 - May 31, 2021

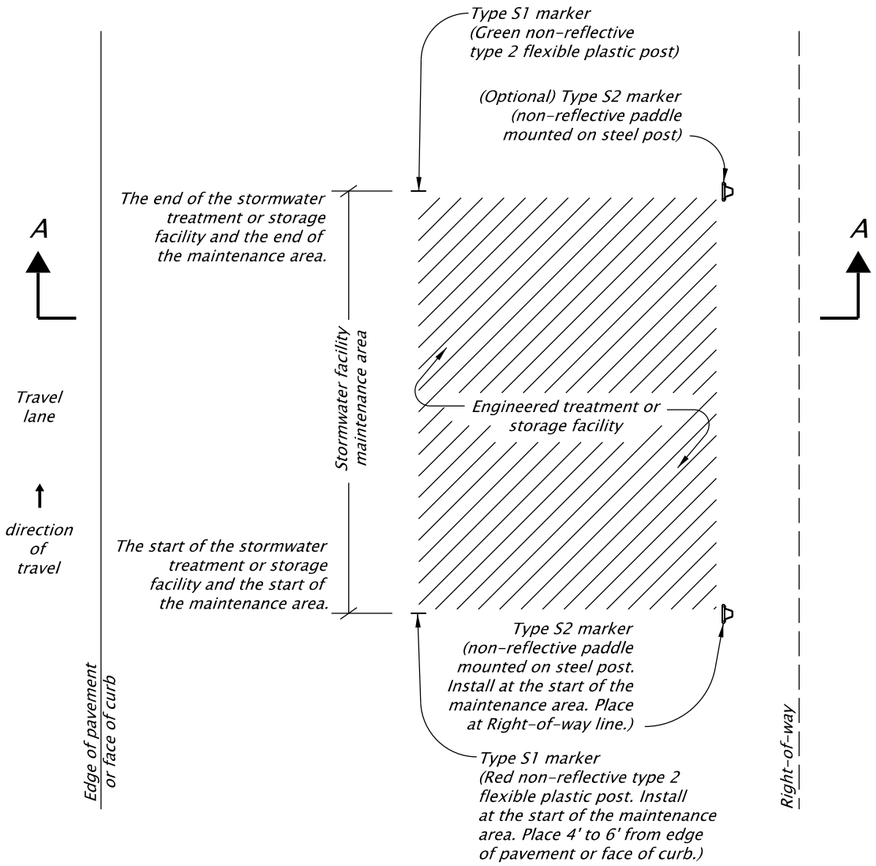

TYPE S1 & S2 MARKERS INSTALLATION DETAIL

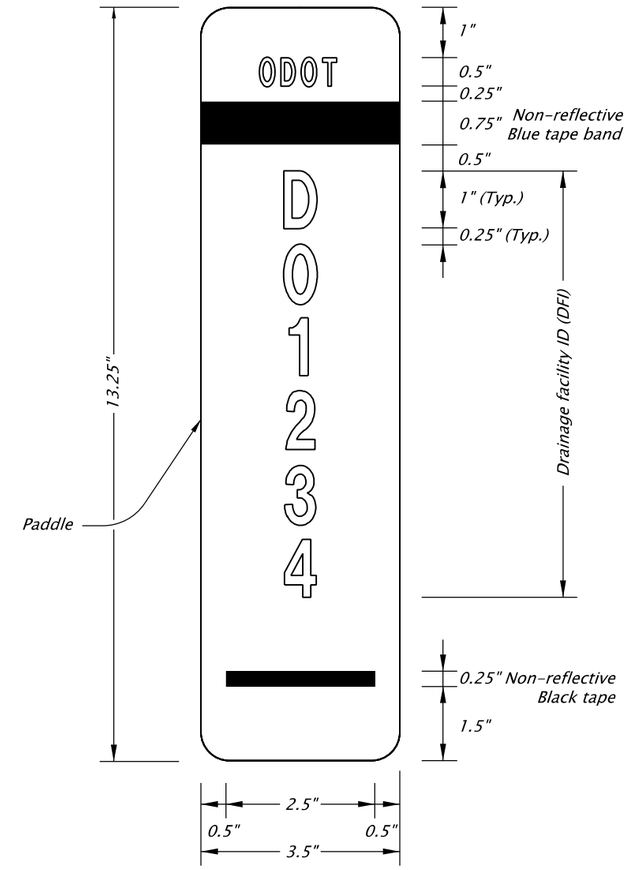

TYPE S2 MARKER

NOTES:

Stormwater Facility Field Marker Type S1:

1. See Standard Drawing TM570 for Type 2 flexible plastic post dimensions. Do not mount reflective sheeting to flexible plastic post.
2. A red Type S1 marker is used to mark the start of a stormwater facility maintenance area. A green Type S1 marker is used to mark the end of a stormwater facility maintenance area.
3. Place 4 to 6 feet from edge of pavement or face of curb.
4. See marker table for installation locations.

Stormwater Facility Field Marker Type S2:

1. Paddle:
   - Aluminum sheet, nominal thickness 0.050"
   - White non-reflective background
   - Mount paddle to one (1) Type 1U steel post using $^{3}/_{16}$" diameter aluminum blind rivets and washers. See Standard Drawing TM570 detail labeled "Steel Posts" for mounting a traffic target. Install paddle onto Type 1U steel post using the same hole pattern.
   - Text and numbers are Type C font in non-reflectorized black
   - Band is non-reflective blue tape
   - Do not mount paddle to other highway signing posts
   - Install paddle parallel to travel lane
   - Prepare paddle for each "DFI" noted in the marker table
2. Steel Posts:
   - See Standard Drawing TM571 for Type 1U steel post dimensions

Stormwater Facility Field Marker Type S3:

1. The top of access or manhole cover shall be stamped with the drainage facility ID. Ink stamping ID is not allowed.

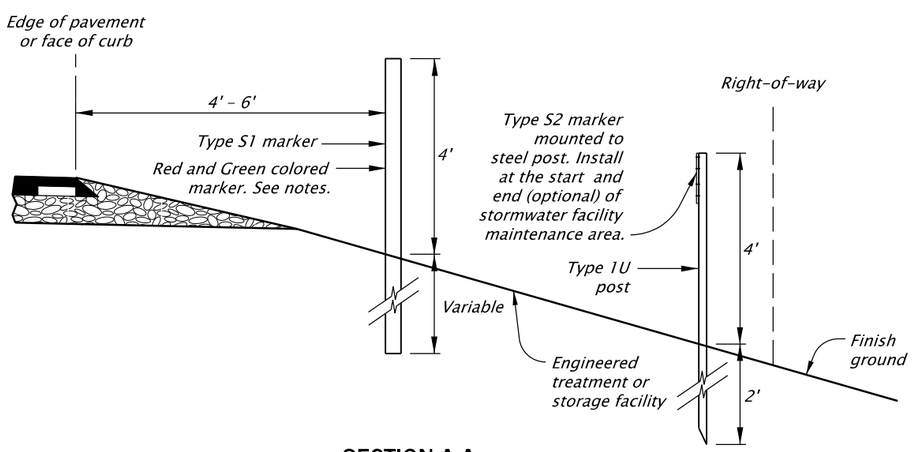

SECTION A-A

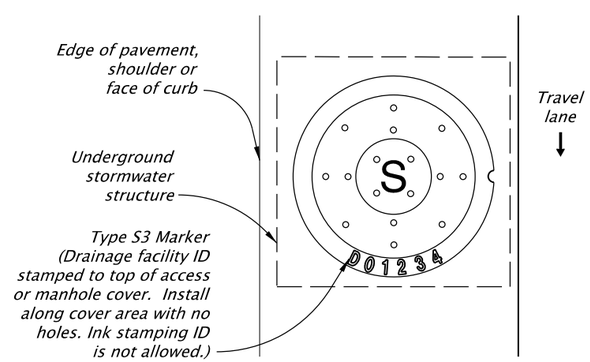

TYPE S3 MARKER INSTALLATION DETAIL

CALC. BOOK NO. N/A	SDR DATE 01-July-2020
The selection and use of this Standard Drawing, while designed in accordance with generally accepted engineering principles and practices, is the sole responsibility of the user and should not be used without consulting a Registered Professional Engineer.	NOTE: All material and workmanship shall be in accordance with the current Oregon Standard Specifications

OREGON STANDARD DRAWINGS

STORMWATER TREATMENT AND STORAGE FACILITY FIELD MARKERS

2021

DATE	REVISION DESCRIPTION

rd399.dgn 07-01-2020

RD399

Effective Date: December 1, 2020 - May 31, 2021

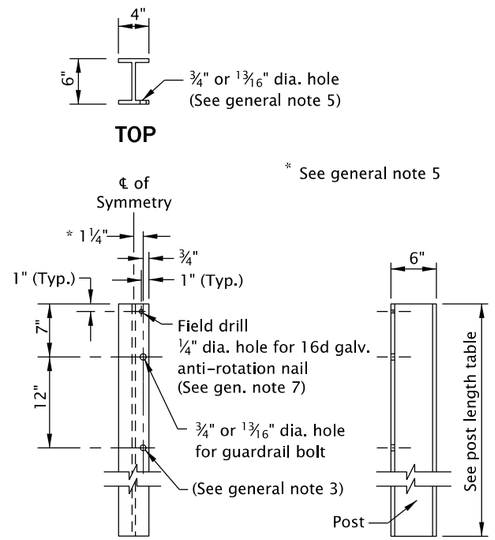

W-BEAM STEEL POST
(W6x8.5 or W6x9)

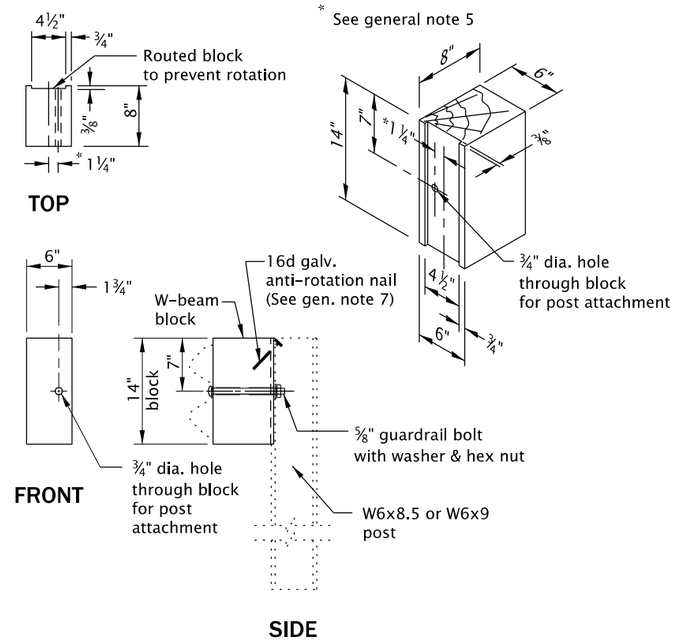

W-BEAM WOOD BLOCK FOR STEEL POST
(6x8 wood block shown)

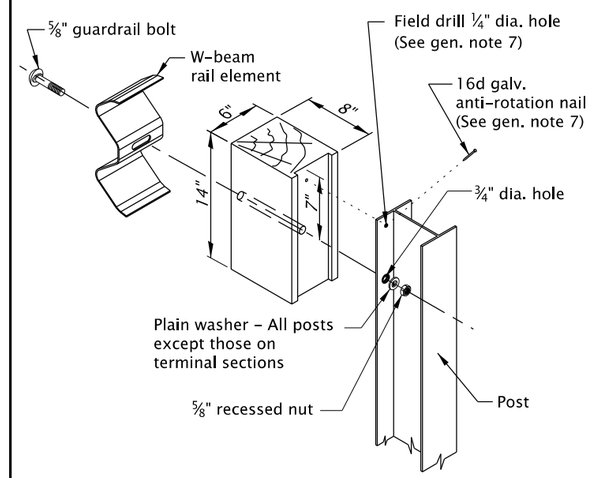

W-BEAM ASSEMBLY DETAIL
(W6x8.5 steel post and 6x8 wood block shown)

GENERAL NOTES FOR ALL DETAILS ON THIS SHEET:

1. See appropriate guardrail standard drawing(s) for details not shown.
2. See Bridge Dwgs. for bridge transition guardrail post and block requirements.
3. Lowest hole(s) required only when channel rail is to be installed. Drill 12" below top ¾" hole(s) used.
4. Dimensions shown are for nominal posts and blocks.
5. Steel posts are shifted to accommodate bolt holes. Holes may be on left, right, or both sides of web. Attach blockouts to steel posts using bolt holes on approaching traffic side of post web.
6. Wood routed blocks shown. Blocks of an approved alternate material may be used. See ODOT's QPL.
7. Blocks shall be routed when steel posts are used to prevent rotation. Or, anti-rotation holes and 16d galvanized nails shall be used instead of routing the blocks.
8. When required by the plans, nested thrie beam steel post shall be W6x9 and a maximum of 3'-1½" on center.

GUARDRAIL STEEL POST TABLE

	GUARDRAIL TYPE	POST SIZE	POST LENGTH	POST SPACING
W-BEAM	2A	W6x9 or W6x8.5	6'-6" or 6'-0"	6'-3"
	3	W6x9 or W6x8.5	6'-6"	3'-1½"
	Metal median barrier	W6x9 or W6x8.5	6'-6"	6'-3"
THRIE BEAM	4	W6x9 or W6x8.5	7'-0"	6'-3"
	4 (Transition)	W6x9	6'-9"	3'-1½"

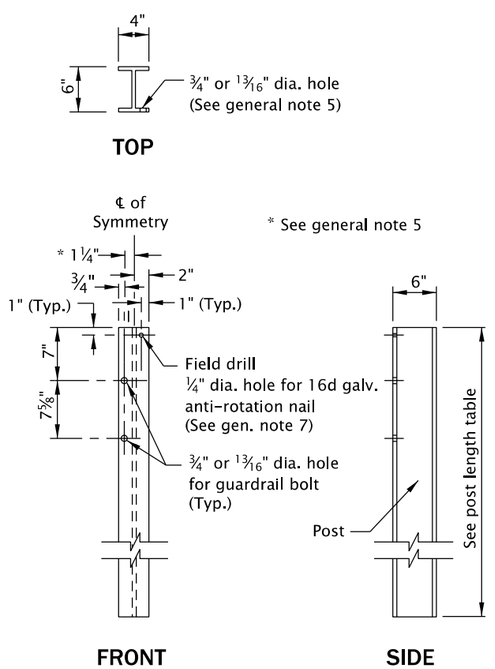

THRIE BEAM STEEL POST
(W6x8.5 or W6x9)

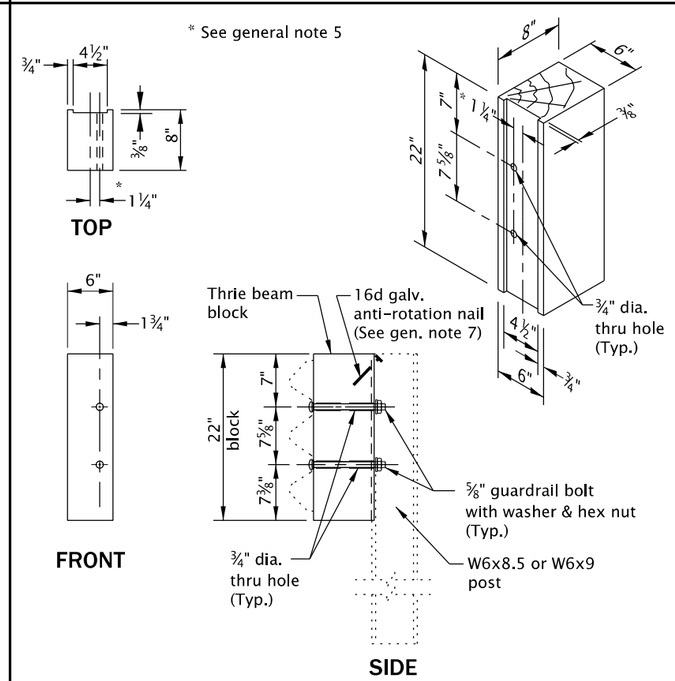

THRIE BEAM WOOD BLOCK FOR STEEL POST
(Routing not required)
(6x8 wood block shown)

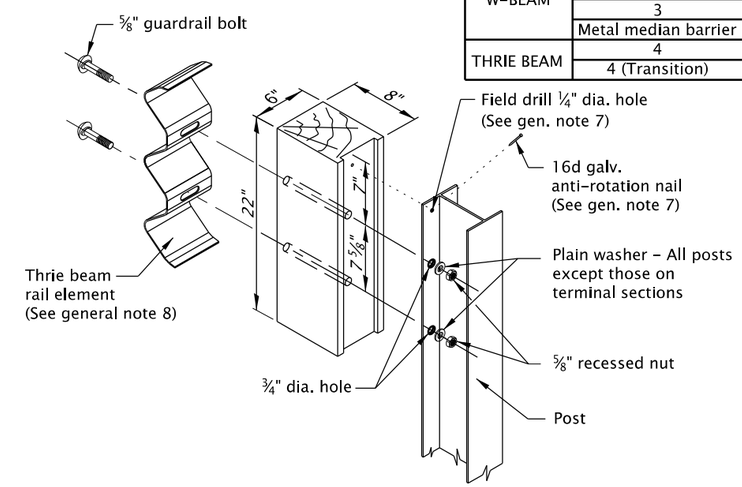

THRIE BEAM ASSEMBLY DETAIL
(W6x8.5 steel post and 6x8 wood block shown)

CALC. BOOK NO. N/A

SDR DATE 20-JUL-2020

NOTE: All material and workmanship shall be in accordance with the current Oregon Standard Specifications

The selection and use of this Standard Drawing, while designed in accordance with generally accepted engineering principles and practices, is the sole responsibility of the user and should not be used without consulting a Registered Professional Engineer.

OREGON STANDARD DRAWINGS

MIDWEST GUARDRAIL SYSTEM STEEL POST AND BLOCK

2021

DATE	REVISION DESCRIPTION

rd404.dgn 20-JUL-2020

RD404

Effective Date: December 1, 2020 - May 31, 2021

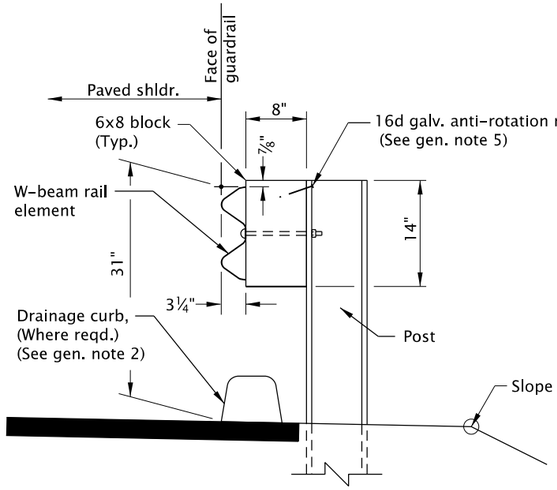

TYPICAL SECTION

(Steel post shown)

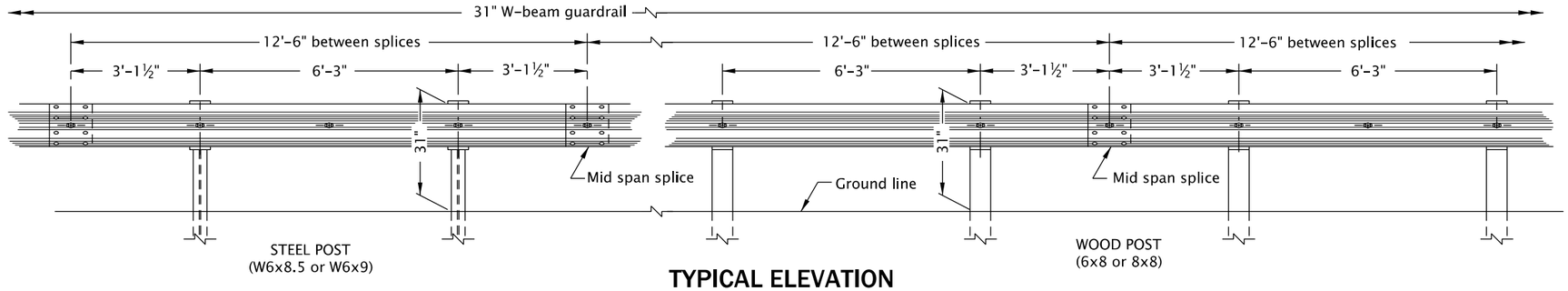

TYPICAL ELEVATION

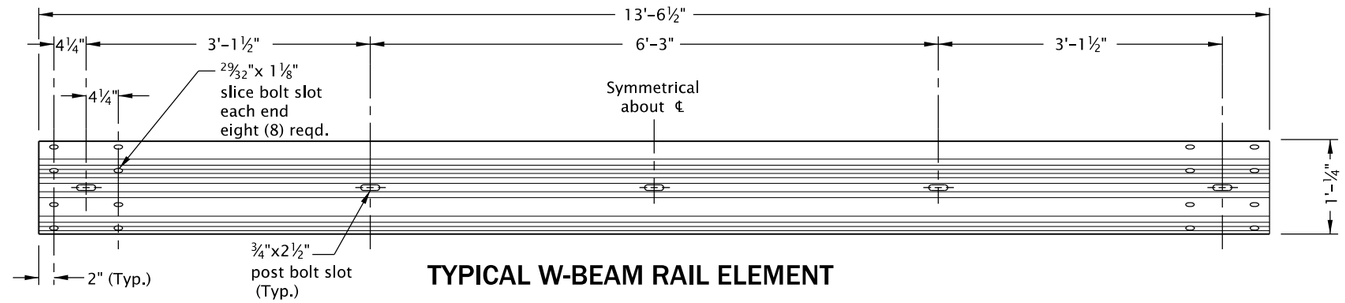

TYPICAL W-BEAM RAIL ELEMENT

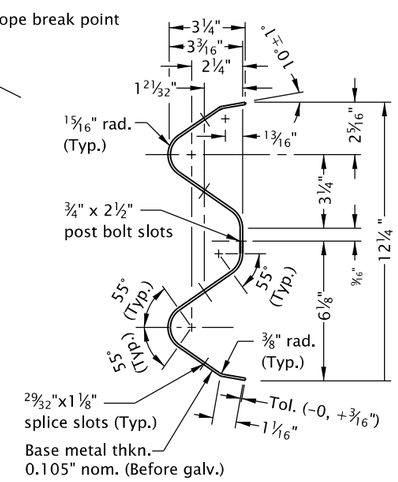

SECTION THRU RAIL ELEMENT

NORMAL RAIL ELEMENT DATA

Type	Effective Lengths	Thkn. (Galv.)
2A, 3	6.25', 12.5', 25'	10 ga. & 12 ga.

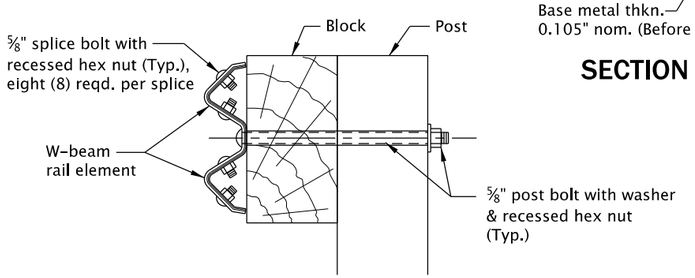

FITTINGS

NOTES:

a. When required by the plans, post bolts to extend beyond the tightened nuts within limits of ¼" to ½".

b. All post bolt threads to be set after assembly for wrench removal only.

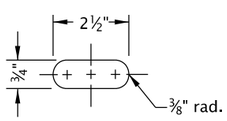

POST BOLT SLOT

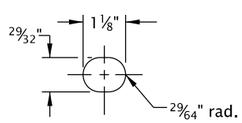

SPLICE BOLT SLOT

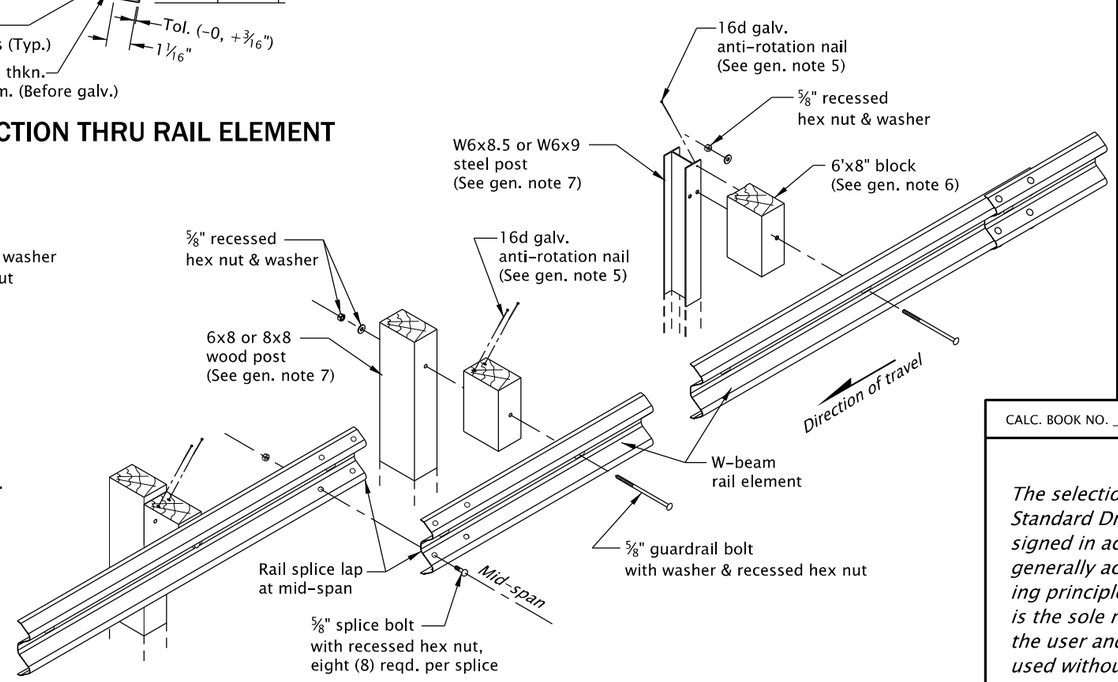

W-BEAM ASSEMBLY DETAILS

GENERAL NOTES FOR ALL DETAILS ON THIS SHEET:

1. See appropriate guardrail standard drawing(s) for details not shown.
2. When required by the plans, drainage curb alignment same as face of guardrail.
3. Lap guardrail in direction of adjacent traffic.
4. Final paved surfacing to extend to face of post. Rail height measured from final paved surface at face of rail to top of rail (typ. all types). 1" ± tolerance.
5. Blocks shall be toe-nailed to prevent rotation when wood posts are used (see Std. Dwg. RD403). Blocks shall be rounted or toe-nailed when steel posts are used to prevent rotation (see Std. Dwg. RD404).
6. Wood blocks shown. Blocks of an approved alternate material may be used. See ODOT's QPL.
7. All posts for guardrail run shall be of the same type: wood or steel.
8. For guardrail installed on radii of 150' or less (5' min. radius) use rail elements pre-curved to industry standard. Install "Radius Identification Plate".

CALC. BOOK NO. N/A

SDR DATE 20-JUL-2020

NOTE: All material and workmanship shall be in accordance with the current Oregon Standard Specifications

The selection and use of this Standard Drawing, while designed in accordance with generally accepted engineering principles and practices, is the sole responsibility of the user and should not be used without consulting a Registered Professional Engineer.

OREGON STANDARD DRAWINGS

MIDWEST GUARDRAIL SYSTEM (W-BEAM)

2021

DATE	REVISION DESCRIPTION

rd407.dgn 20-JUL-2020

RD407

Effective Date: December 1, 2020 - May 31, 2021

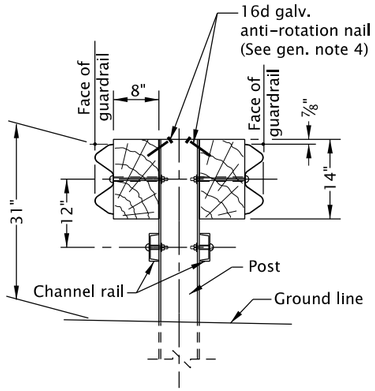

TYPICAL SECTION

(Steel post shown)

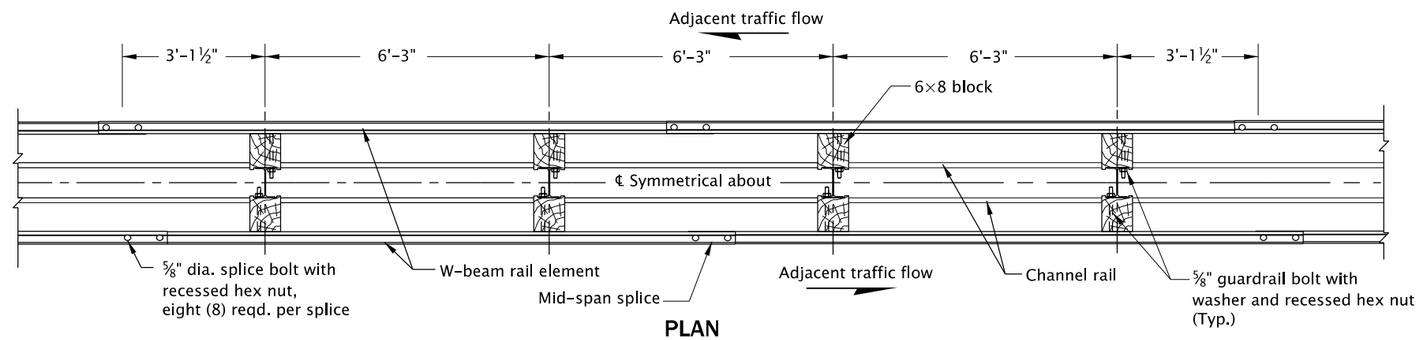

PLAN

(Steel post shown)

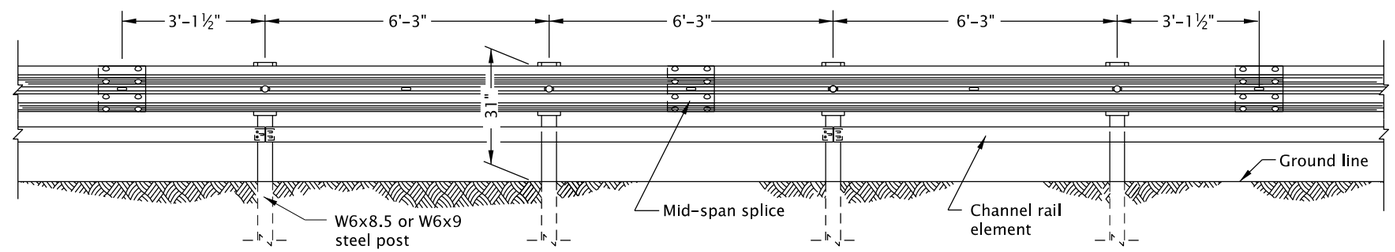

ELEVATION

(Steel post shown)

GENERAL NOTES FOR ALL DETAILS ON THIS SHEET:

1. See appropriate guardrail standard drawing(s) for details not shown.
2. Median barrier post spacing shall be 6' - 3" on centers. See end construction for variations.
   a) Use ⅝" dia. button head bolt or ⅝" dia. alternate treated both end bolt with washer and recessed hex nut when barrier separates to double post mounting.
   b) Post bolts to extend beyond the tightened nuts within limits of ¼" to ½".
3. Lap guardrail in direction of adjacent traffic.
4. Blocks shall be toe-nailed to prevent rotation when wood posts are used (see Std. Dwg. RD403). Blocks shall be routed or toe-nailed when steel posts are used to prevent rotation (see Std. Dwg. RD404).
5. Wood blocks shown. Blocks of an approved alternate material may be used. See ODOT's QPL.

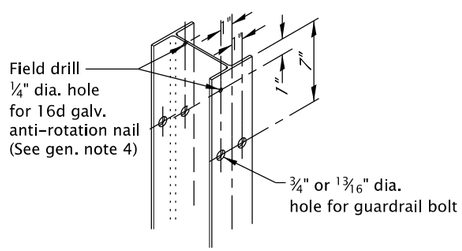

STEEL POST

(All dimensions typ. both sides)

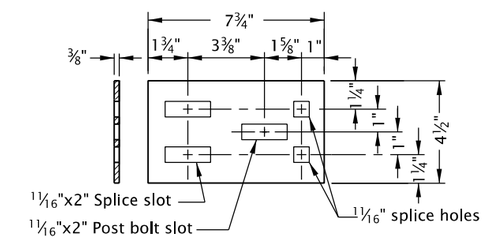

SPLICE PLATE

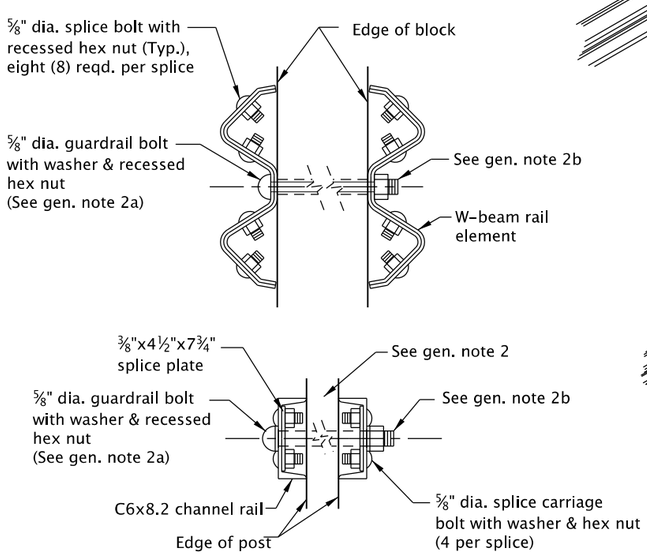

FITTINGS

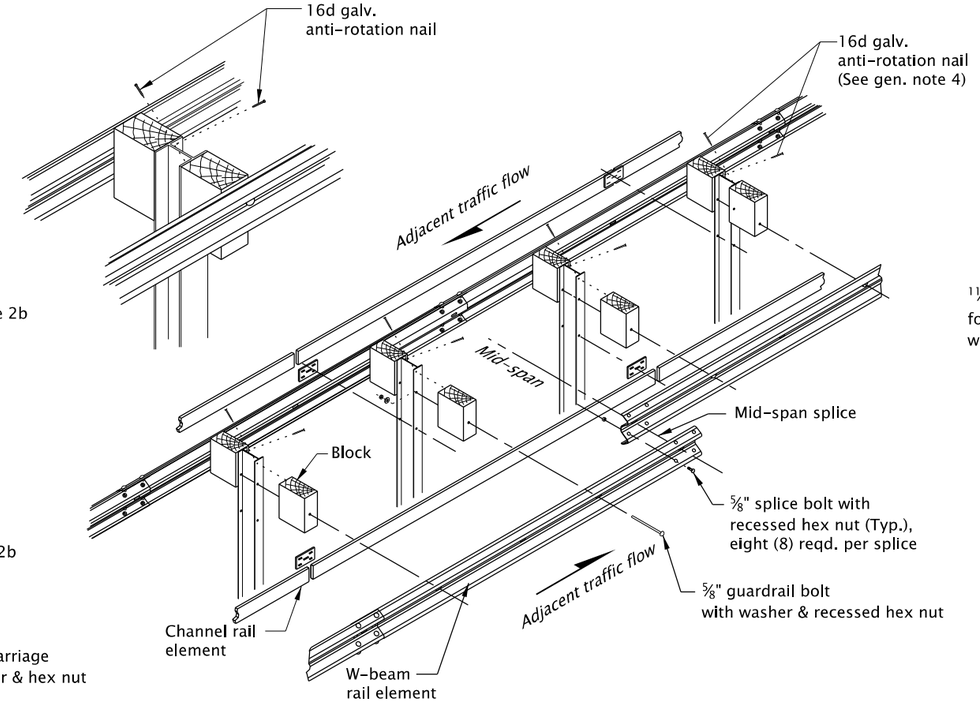

ASSEMBLY DETAILS

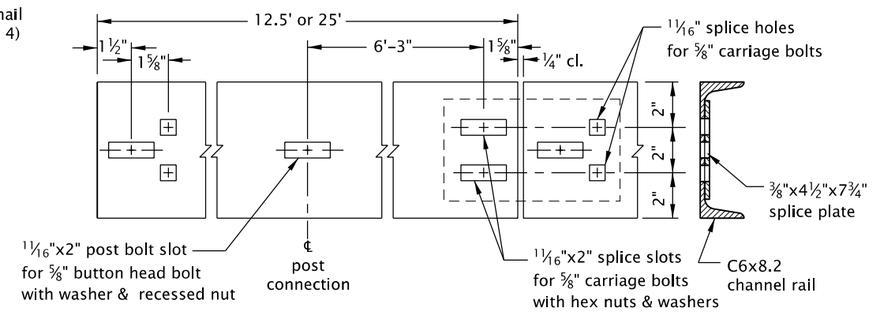

CHANNEL RAIL

Note: Clearance to be 1 9/16" at rail splice for bridge expansion joints.

CALC. BOOK NO. N/A	SDR DATE 20-JUL-2020
The selection and use of this Standard Drawing, while designed in accordance with generally accepted engineering principles and practices, is the sole responsibility of the user and should not be used without consulting a Registered Professional Engineer.	NOTE: All material and workmanship shall be in accordance with the current Oregon Standard Specifications

OREGON STANDARD DRAWINGS

MIDWEST GUARDRAIL SYSTEM METAL MEDIAN BARRIER (DOUBLE SIDES)

2021

DATE	REVISION DESCRIPTION

rd408.dgn 20-JUL-2020

RD408

Effective Date: December 1, 2020 - May 31, 2021

GENERAL NOTES FOR ALL DETAILS ON THIS SHEET

1. See appropriate guardrail standard drawing(s) for details not shown.
2. Use ½" steel plate meeting requirements of ASTM A36.
3. Galvanizing required for plate and hardware.
4. Use zinc rich paint to coat field drilled holes.
5. Hex head bolts are ASTM A307.

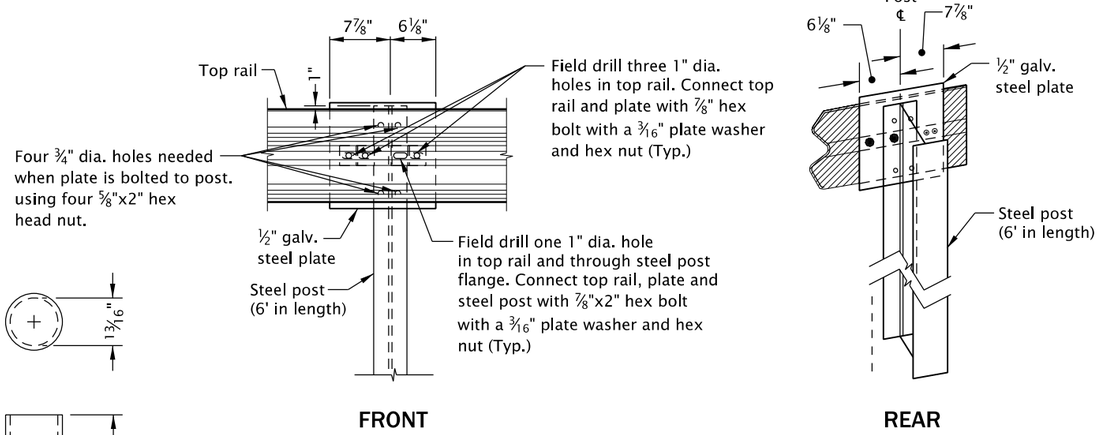

FRONT

REAR

TOP RAIL ANCHOR POST/PLATE ATTACHMENT

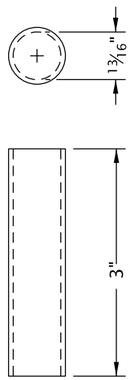

PIPE SLEEVE SPACER

TOP VIEW

TOP VIEW

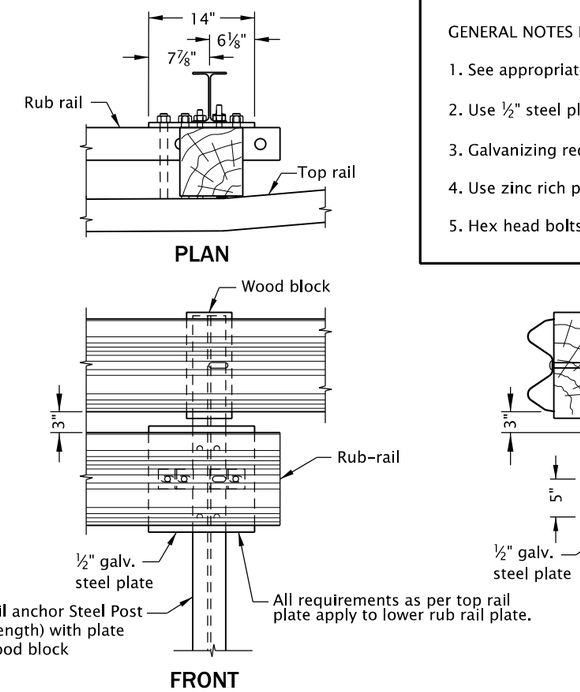

PLAN

FRONT

SIDE

RUB RAIL ANCHOR POST/PLATE ATTACHMENT

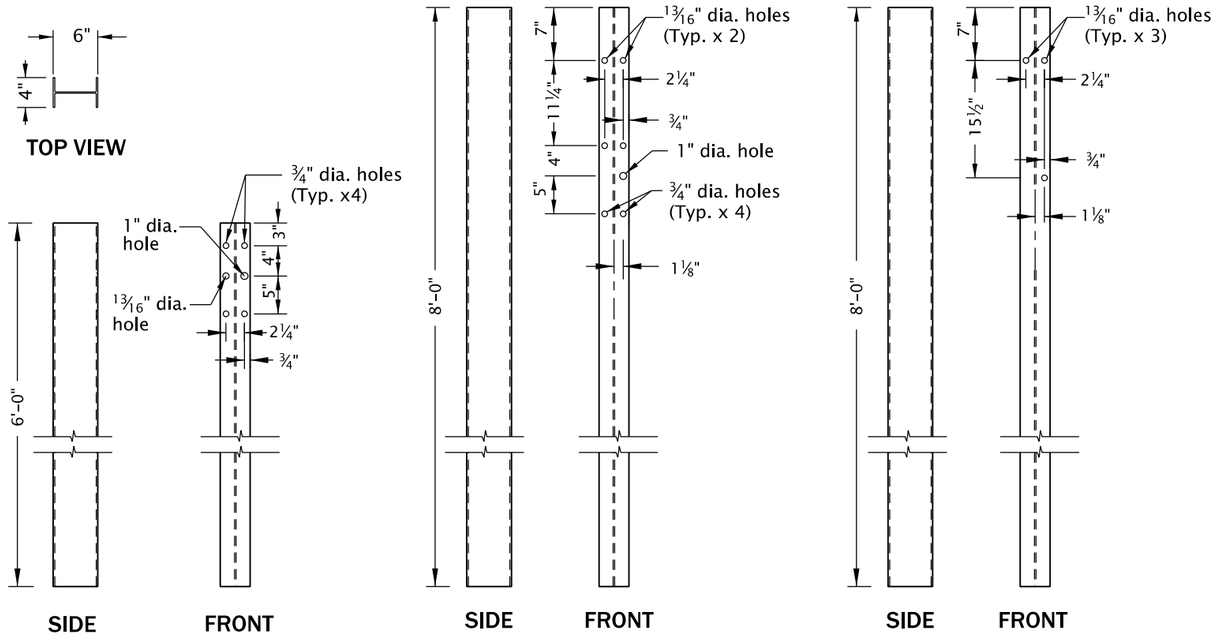

TOP VIEW

SIDE FRONT

6' - 0" LENGTH
(Post 1-3)

SIDE FRONT

8' - 0" LENGTH
(Post 4)

SIDE FRONT

8' - 0" LENGTH

WIDE-FLANGE STEEL POST
(W6 x 9 or W6 x 8.5)

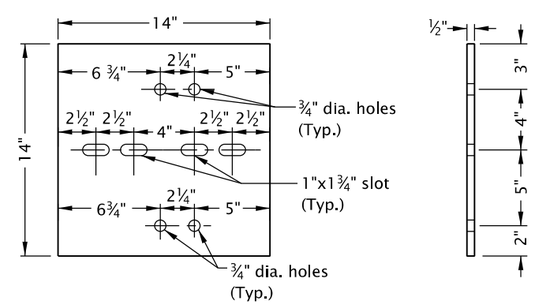

FRONT

SIDE

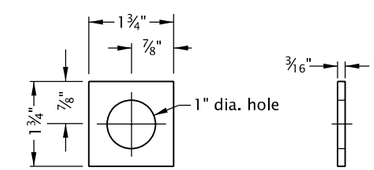

FRONT

SIDE

PLATE WASHER

BURIED IN BACKSLOPE STEEL ANCHOR PLATE

CALC. BOOK NO. N/A

SDR DATE 20-JUL-2020

NOTE: All material and workmanship shall be in accordance with the current Oregon Standard Specifications

The selection and use of this Standard Drawing, while designed in accordance with generally accepted engineering principles and practices, is the sole responsibility of the user and should not be used without consulting a Registered Professional Engineer.

OREGON STANDARD DRAWINGS

MIDWEST GUARDRAIL SYSTEM BURIED IN BACKSLOPE TERMINAL ANCHOR PARTS

2021

DATE	REVISION DESCRIPTION

rd437.dgn 20-JUL-2020

RD437

Effective Date: December 1, 2020 - May 31, 2021

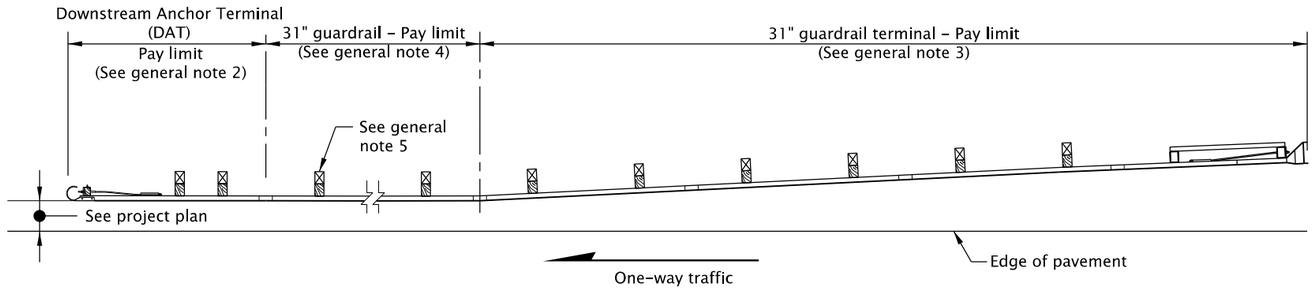

ONE-WAY TRAFFIC

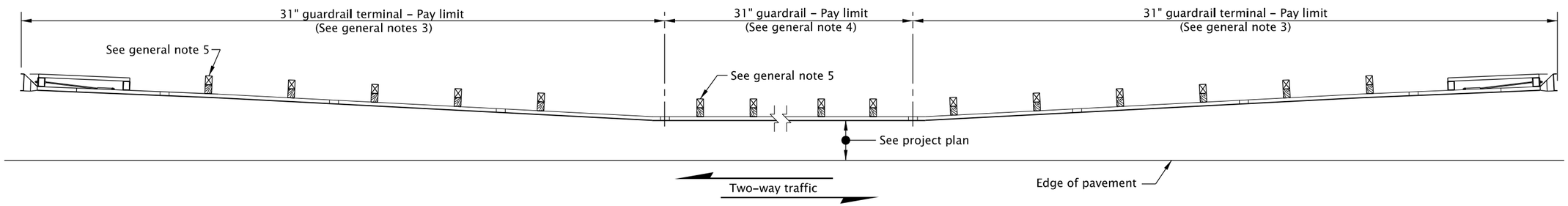

TWO-WAY TRAFFIC

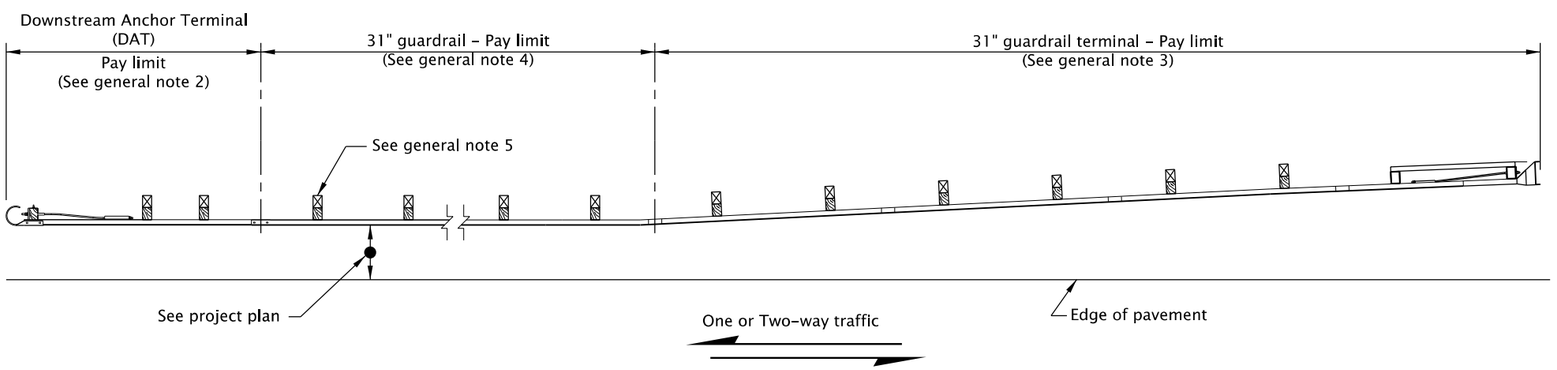

ONE OR TWO-WAY TRAFFIC

GENERAL NOTES FOR ALL DETAILS ON THIS SHEET:

1. See appropriate guardrail standard drawing(s) for details not shown.
2. Where a crashworthy terminal is not required, use a Downstream Anchor Terminal (DAT). See Std. Dwg. RD438.
3. For terminal type and details, see project plans and applicable drawings.
4. For additional details not shown on this plan, refer to Std. Dwg. RD407.
5. Wood or steel post. Wood post shown.

CALC. BOOK NO. N/A

SDR DATE 20-JUL-2020

NOTE: All material and workmanship shall be in accordance with the current Oregon Standard Specifications

The selection and use of this Standard Drawing, while designed in accordance with generally accepted engineering principles and practices, is the sole responsibility of the user and should not be used without consulting a Registered Professional Engineer.

OREGON STANDARD DRAWINGS

MIDWEST GUARDRAIL SYSTEM TYPICAL LAYOUTS FOR EMBANKMENTS

2021

DATE	REVISION DESCRIPTION

rd443.dgn 20-JUL-2020

RD443

Effective Date: December 1, 2020 – May 31, 2021

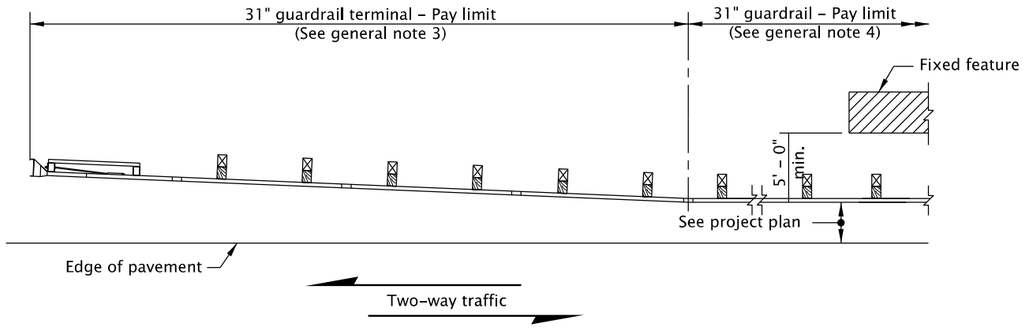

TRAILING END TWO-WAY TRAFFIC

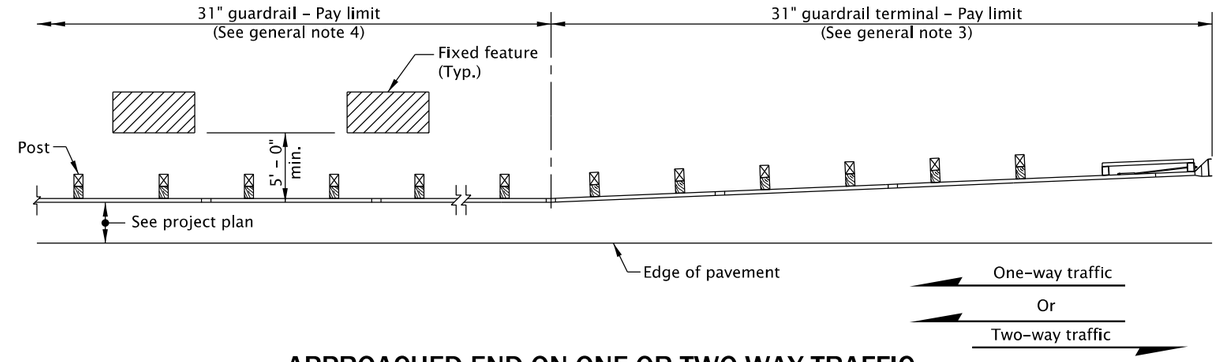

APPROACHED END ON ONE OR TWO-WAY TRAFFIC

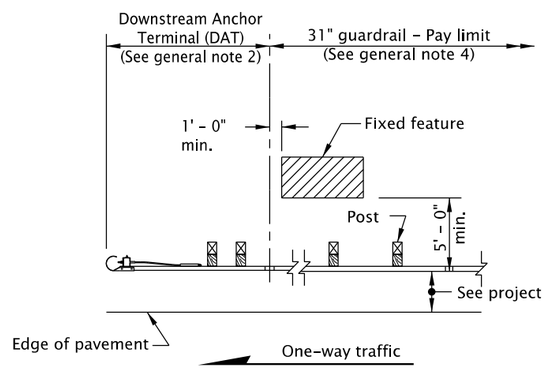

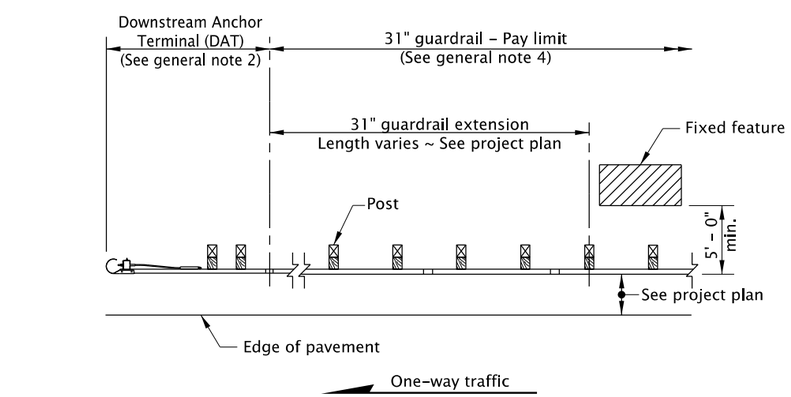

TRAILING END ONE-WAY TRAFFIC

GENERAL NOTES FOR ALL DETAILS ON THIS SHEET:

1. See appropriate guardrail standard drawing(s) for details not shown.
2. Where a crashworthy terminal is not required, use a Downstream Anchor Terminal (DAT). See Std. Dwg. RD438.
3. For terminal type and details, see project plans and applicable drawings.
4. For additional details not shown on this plan, refer to Std. Dwg. RD407.
5. Wood or steel post. Wood post shown.

CALC. BOOK NO. N/A

SDR DATE 20-JUL-2020

NOTE: All material and workmanship shall be in accordance with the current Oregon Standard Specifications

The selection and use of this Standard Drawing, while designed in accordance with generally accepted engineering principles and practices, is the sole responsibility of the user and should not be used without consulting a Registered Professional Engineer.

OREGON STANDARD DRAWINGS

MIDWEST GUARDRAIL SYSTEM TYPICAL LAYOUTS FOR FIXED OBJECTS

2021

DATE	REVISION DESCRIPTION

rd444.dgn 20-JUL-2020

RD444

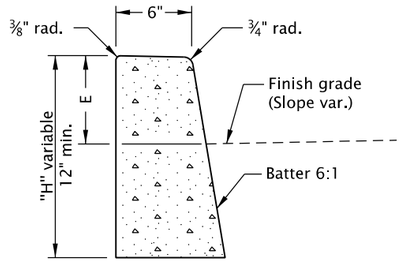

O.D.O.T. & City of Portland Standard "H"=16"

STANDARD CURB

(See general note 11)

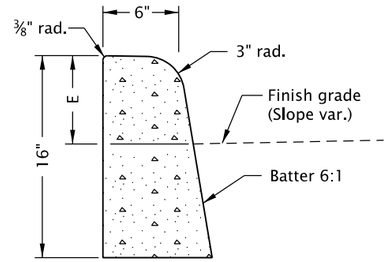

MOUNTABLE CURB

(See general note 11)

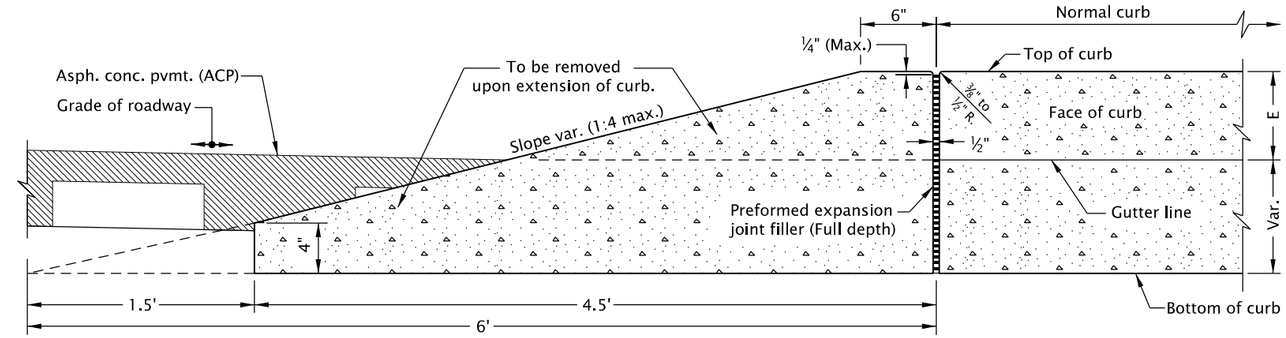

CURB ENDING DETAIL

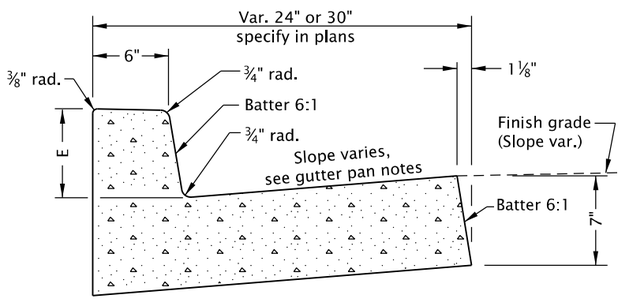

CURB AND GUTTER

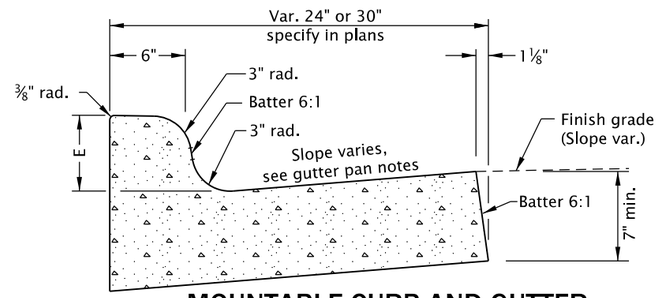

MOUNTABLE CURB AND GUTTER

GUTTER PAN NOTES:

Slope 5.0% normal.

Slope 4.0% max. at curb ramps.

Vary slope as reqd. for drainage. Vary where shown on plans, and allowed by jurisdiction.

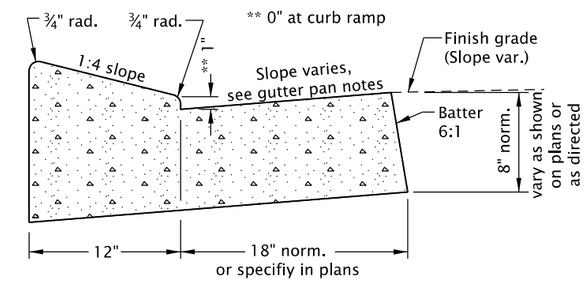

LOW PROFILE MOUNTABLE CURB AND GUTTER

(Where shown on plans)

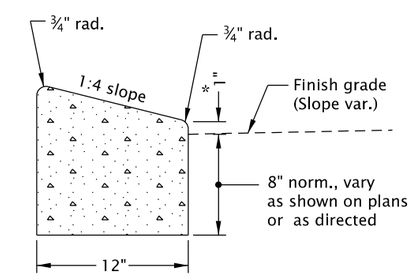

* 0" for Truck Apron

LOW PROFILE MOUNTABLE CURB

(See general note 11)

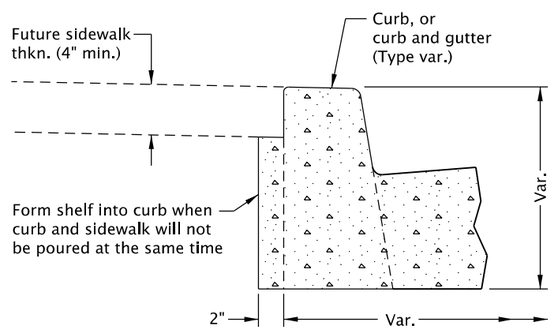

MODIFICATION FOR KEYWAY

(Where shown on plans)

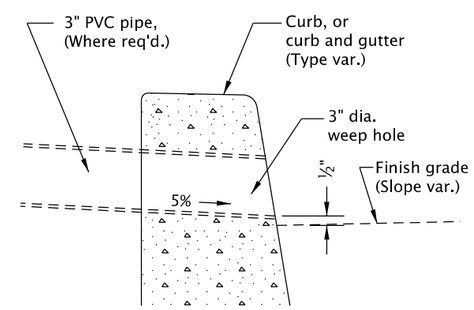

WEEP HOLE DETAIL

(Where shown on plans, and allowed by jurisdiction)

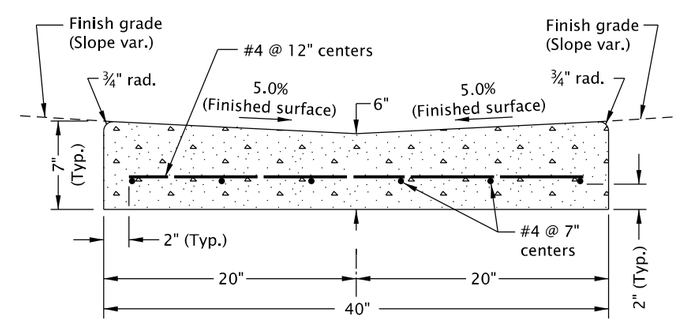

VALLEY GUTTER

GENERAL NOTES FOR ALL DETAILS ON THIS SHEET:

1. Curb exposure "E" = 6" to 9", as measured vertically from flowline to highest point on curb. Vary as shown on plans or as directed. O.D.O.T standard "E"=7".
2. Const. curb expansion joints at 200' maximum spacing, and at points of tangency, and at ends of each driveways.
3. Const. curb contraction joints at 15' maximum spacing, and at ends of each inlet and curb ramp.
4. Transitions shall be used to connect curbs of different exposures "E". ("E" Is the total vertical dimension of those curb surfaces having a slope of 1:1 or steeper). Minimum desirable transition length shall be 20' for each 1" difference in "E".
5. Tops of all curbs shall slope toward the roadway at 1.5% max. (Max. 2.0% finished surface slope), unless otherwise shown, or as directed.
6. Dimensions are nominal, vary to conform with curb machine approved by the engineer.
7. Dimensions adjacent to radii are measured to the point of intersection of curb surfaces.
8. For sidewalk details, and monolithic curb & sidewalk, see Std. Dwgs. RD720 & RD721.
9. For drainage curbs, see Std. Dwg. RD701.
10. For curb ramp details, see Std. Dwgs. RD900 series.
11. On or along state highways, curb and gutter is required at curb ramp.

CALC. BOOK NO. N/A

SDR DATE 20-JUL-2020

NOTE: All material and workmanship shall be in accordance with the current Oregon Standard Specifications

The selection and use of this Standard Drawing, while designed in accordance with generally accepted engineering principles and practices, is the sole responsibility of the user and should not be used without consulting a Registered Professional Engineer.

OREGON STANDARD DRAWINGS

CURBS

2021

DATE	REVISION DESCRIPTION

Effective Date: December 1, 2020 - May 31, 2021

rd700.dgn 20-JUL-2020

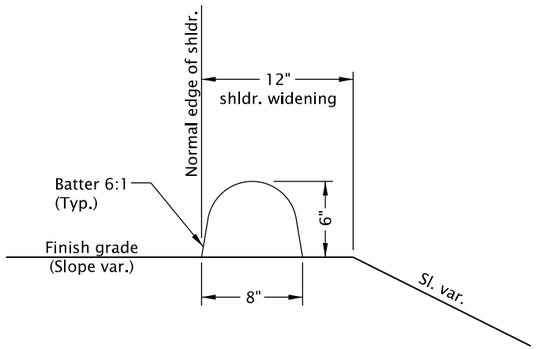

ASPHALT CONCRETE

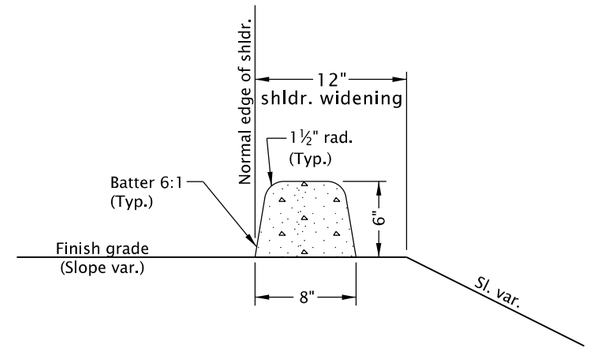

PORTLAND CEMENT CONCRETE

DRAINAGE CURBS

(See general note 4)

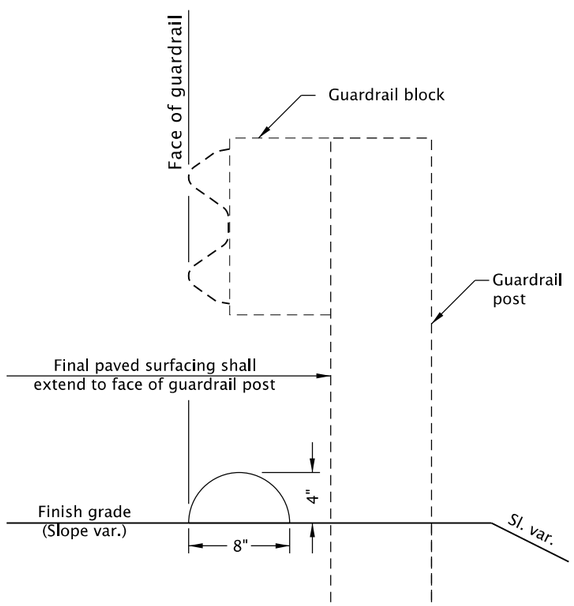

ASPHALT CONCRETE

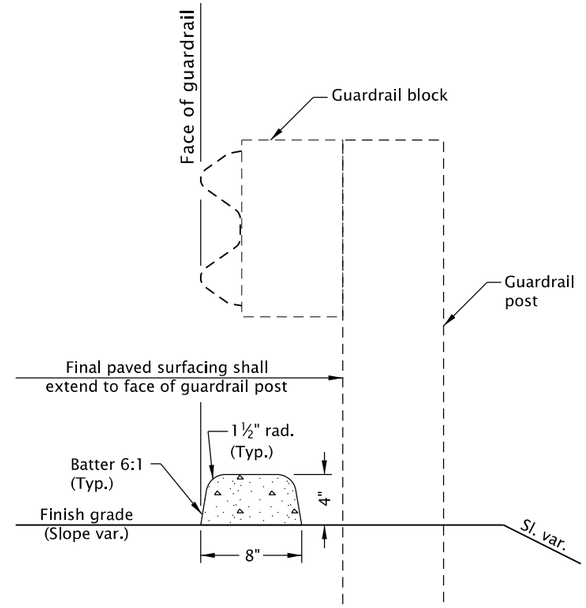

PORTLAND CEMENT CONCRETE

DRAINAGE CURBS UNDER GUARDRAIL

(See general note 4)

GENERAL NOTES FOR ALL DETAILS ON THIS SHEET:

1. For PCC drainage curbs, construct curb expansion joints at 200' maximum spacing, and at points of tangency.
2. For PCC drainage curbs, construct curb contraction joints at 15' maximum spacing.
3. Dimensions are nominal, vary to conform with curb machine approved by the engineer.
4. When bonding to dense graded ACP, apply epoxy cement between surfaces.
5. When drainage curb is required, curb alignment shall be the same as face of guardrail, as shown above. When a run of drainage curb, or any part thereof, is placed under guardrail, curb height shall be 4".
6. For other curb types, see Std. Dwg. RD700.
7. For guardrail details not shown, see Std. Dwg. RD400.

CALC. BOOK NO. N/A

SDR DATE 20-JUL-2020

NOTE: All material and workmanship shall be in accordance with the current Oregon Standard Specifications

The selection and use of this Standard Drawing, while designed in accordance with generally accepted engineering principles and practices, is the sole responsibility of the user and should not be used without consulting a Registered Professional Engineer.

OREGON STANDARD DRAWINGS

DRAINAGE CURBS

2021

DATE	REVISION DESCRIPTION

rd701.dgn 20-JUL-2020

RD701

Effective Date: December 1, 2020 - May 31, 2021

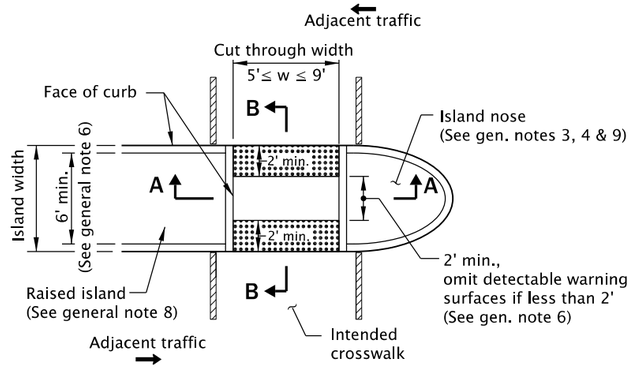

PLAN

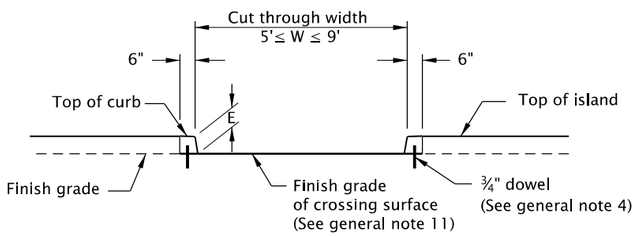

SECTION A-A

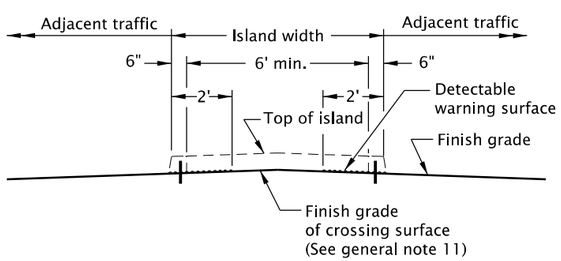

SECTION B-B

MEDIAN ISLAND CROSSING (CUT THROUGH)

(A.C. pavement shown)

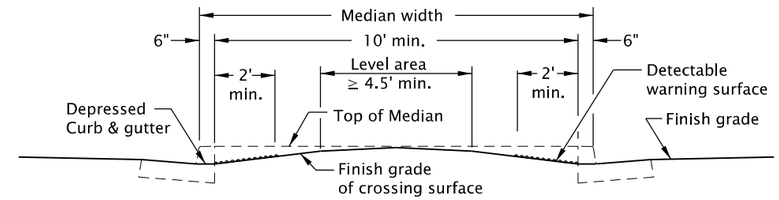

SECTION C-C

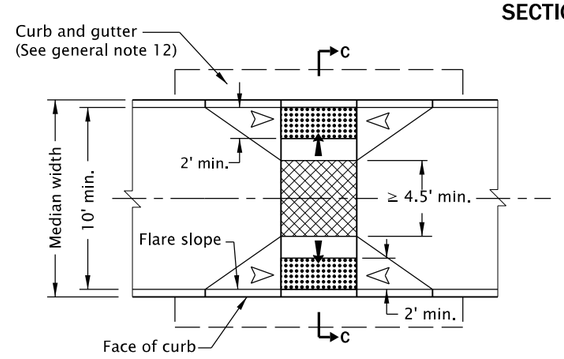

TYPE "A"

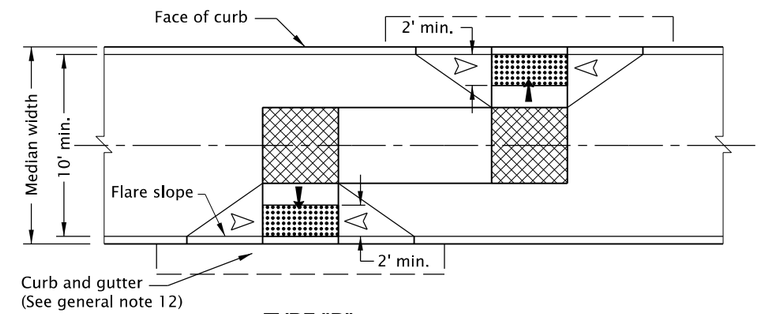

TYPE "B"

MEDIAN RAISED CROSSING

(P.C. conc. surface shown)

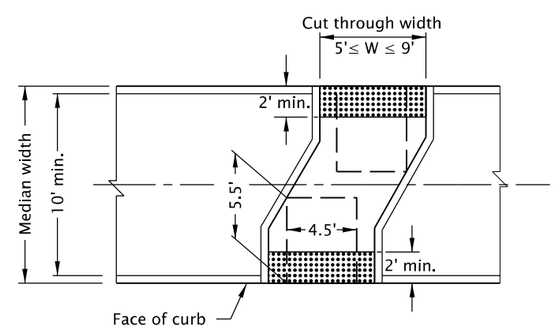

MEDIAN CUT-THROUGH CROSSING

(Asph. conc. surface shown)

LEGEND:

- Marked or intended crossing location
- Level area (Turning space/landing) Unobstructed 4.5' x 4.5' With obstruction 4.5' x 5.5' (Longer dimension in direction of pedestrian street crossing). For the purposes of this application, a max. 2.0% finished surface slope (for drainage) is considered level.
- Detectable warning surface
- Cross slope 1.5% max. (Max. 2.0% finished surface slope)
- Running slope 7.5% max. (Max. 8.3% finished surface slope)
- Flare slope (Max. 10.0% finished surface slope)
- Zero curb exposure
- Clear space 4.5' x 5.5' (Longer dimension in direction of pedestrian street crossing)

GENERAL NOTES FOR ALL DETAILS ON THIS SHEET:

1. Accessible route islands are based on applicable ODOT Standards.
2. Place detectable warning surface at the back of curb for a minimum depth of 2' at curb ramp that is adjacent to traffic. For details not shown, see Std. Dwgs. RD902 through RD908.
3. The min. area of islands that contain signal poles, pedestals, etc., shall be 75 sq. ft. Square feet to be measured to outer perimeter of entire island.
4. For cut through islands dowel each island segment to the pvmt. with a min. of 2, ¾" dia. dowels. Dowel the nose section of the raised median island with a minimum of 2, ¾" dia. dowels. Place dowels as directed. See Std. Dwg RD705.
5. Align curb ramps for lowered or partially lowered island and cut through island with the crosswalk.
6. Detectable warning surfaces shall be separated by a 2.0 ft minimum length of walkway without detectable warnings. Where no curb, the detectable warning surface shall be placed at the edge of roadway.
7. Grade breaks at the top and bottom of curb ramp runs shall be perpendicular to the direction of the ramp run. Grade breaks shall not be permitted on the surface of ramp runs and turning spaces. Surface slopes that meet at grade breaks shall be flush.
8. Curb type and island width as shown on plans or as directed. Type A or Type CA islands are acceptable alternates, see Std. Dwg. RD705.
9. See project plans for details not shown. See Std. Dwg. RD707 for island nose treatment. See Std. Dwg. RD705 for expansion and contraction joint spacing. See Std. Dwgs. RD700, RD701, RD705, RD706 & RD755 for additional details. See TM Standard Drawings for signal pole, pedestrian pedestal, crosswalk markings, and related details.
10. Details intended for pedestrian route only. For multi-use path, see project plans for specific details.
11. When crossing surface grade is ≤ 5%, a level area is not required.
12. On or along state highways, curb and gutter is required at curb ramps.

CALC. BOOK NO. N/A

SDR DATE 20-JUL-2020

NOTE: All material and workmanship shall be in accordance with the current Oregon Standard Specifications

The selection and use of this Standard Drawing, while designed in accordance with generally accepted engineering principles and practices, is the sole responsibility of the user and should not be used without consulting a Registered Professional Engineer.

OREGON STANDARD DRAWINGS

ACCESSIBLE ROUTE ISLANDS

2021

DATE	REVISION DESCRIPTION

rd710.dgn 20-JUL-2020

RD710

Effective Date: December 1, 2020 - May 31, 2021

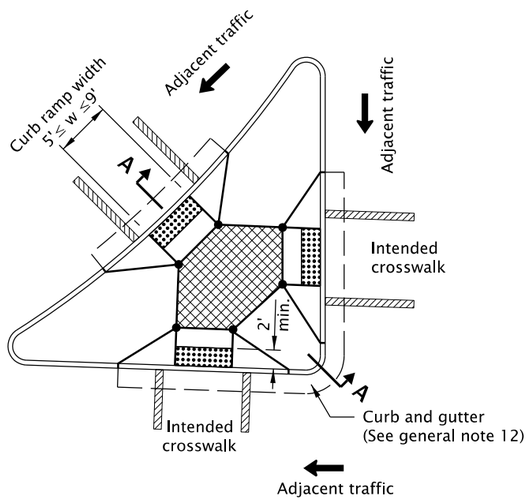

PLAN VIEW

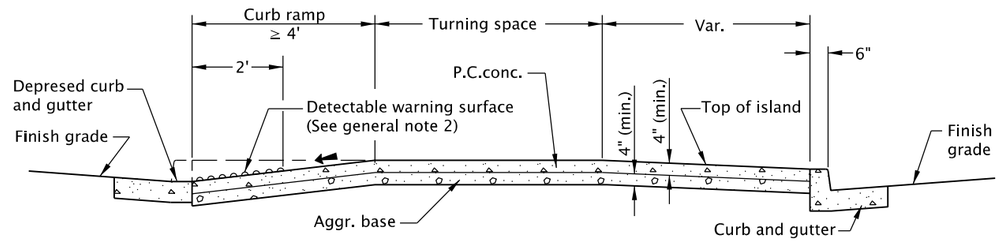

SECTION A-A

PARTIALLY LOWERED ISLAND DETAIL

(Use perpendicular curb ramp inspection form)

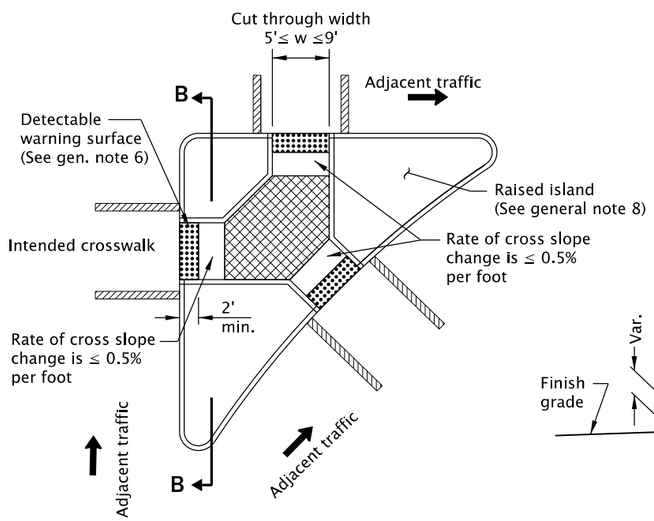

PLAN VIEW

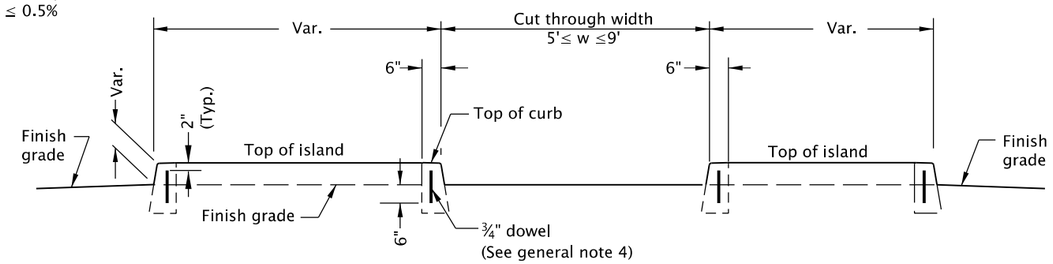

SECTION B-B

CUT THROUGH ISLAND DETAIL

RAISED RIGHT TURN CHANNELIZATION ISLAND

GENERAL NOTES FOR ALL DETAILS ON THIS SHEET:

1. Accessible route islands are based on applicable ODOT Standards.
2. Place detectable warning surface at the back of curb for a minimum depth of 2' at curb ramp that is adjacent to traffic. For details not shown, see Std. Dwgs. RD902 through RD908.
3. The min. area of islands that contain signal poles, pedestals, etc., shall be 75 sq. ft. Square feet to be measured to outer perimeter of entire island.
4. For cut through islands dowel each island segment to the pvmt. with a min. of 2, 3#4" dia. dowels. Dowel the nose section of the raised median island with a minimum of 2, 3#4" dia. dowels. Place dowels as directed. See Std. Dwg RD705.
5. Align curb ramps for lowered or partially lowered island and cut through island with the crosswalk.
6. Detectable warning surfaces shall be separated by a 2.0 ft minimum length of walkway without detectable warnings. Where no curb, the detectable warning surface shall be placed at the edge of roadway.
7. Grade breaks at the top and bottom of curb ramp runs shall be perpendicular to the direction of the ramp run. Grade breaks shall not be permitted on the surface of ramp runs and turning spaces. Surface slopes that meet at grade breaks shall be flush.
8. Curb type and island width as shown on plans or as directed. Type A or Type CA islands are acceptable alternates, see Std. Dwg. RD705.
9. See project plans for details not shown.
   See Std. Dwg. RD707 for island nose treatment.
   See Std. Dwg. RD705 for expansion and contraction joint spacing.
   See Std. Dwgs. RD700, RD701, RD705, RD706 & RD755 for additional details.
   See TM Standard Drawings for signal pole, pedestrian pedestal, crosswalk markings, and related details.
10. Details intended for pedestrian route only. For multi-use path, see project plans for specific details.
11. When crossing surface grade is ≤ 5%, a level area is not required.
12. On or along state highways, curb and gutter is required at curb ramps.

LEGEND:

- Marked or intended crossing location
- Level area (Turning space/landing)
  Unobstructed 4.5' x 4.5'
  With obstruction4.5' x 5.5' (Longer dimension in direction of pedestrian street crossing).
  For the purposes of this application, a max. 2.0% finished surface slope (for drainage) measured perpendicular in two directions is considered level.
- Detectable warning surface
- Cross slope 1.5% max. (Max. 2.0% finished surface slope)
- Running slope 7.5% max. (Max. 8.3% finished surface slope)
- Zero curb exposure

CALC. BOOK NO. N/A

SDR DATE 20-JUL-2020

NOTE: All material and workmanship shall be in accordance with the current Oregon Standard Specifications

The selection and use of this Standard Drawing, while designed in accordance with generally accepted engineering principles and practices, is the sole responsibility of the user and should not be used without consulting a Registered Professional Engineer.

OREGON STANDARD DRAWINGS

ACCESSIBLE ROUTE CHANNELIZED ISLANDS

2021

DATE	REVISION DESCRIPTION
07-2020	DRAWING CREATED

rd711.dgn 20-JUL-2020

RD711

Effective Date: December 1, 2020 - May 31, 2021

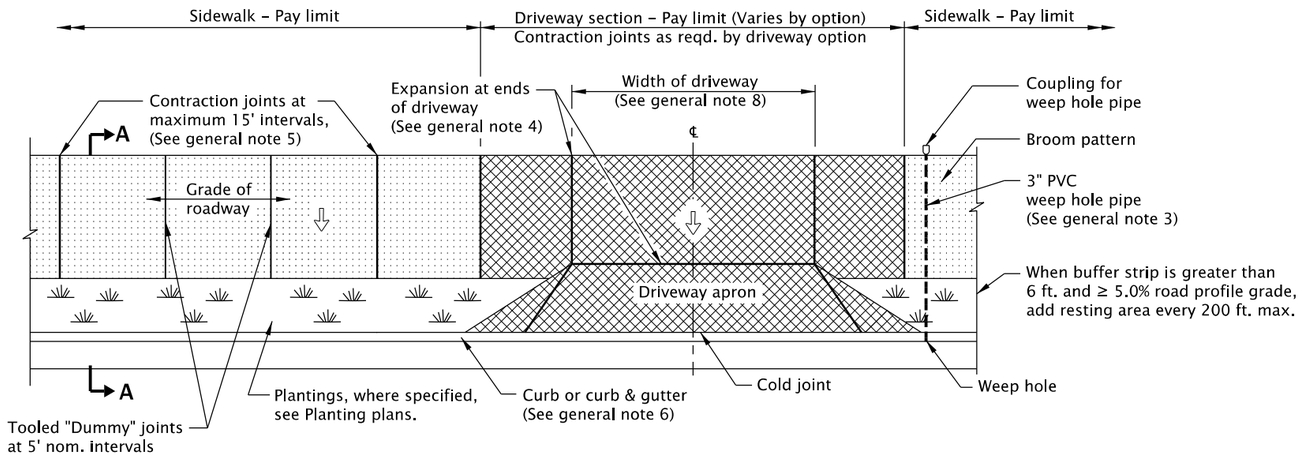

TYPICAL PLAN VIEW - SEPARATED SIDEWALK

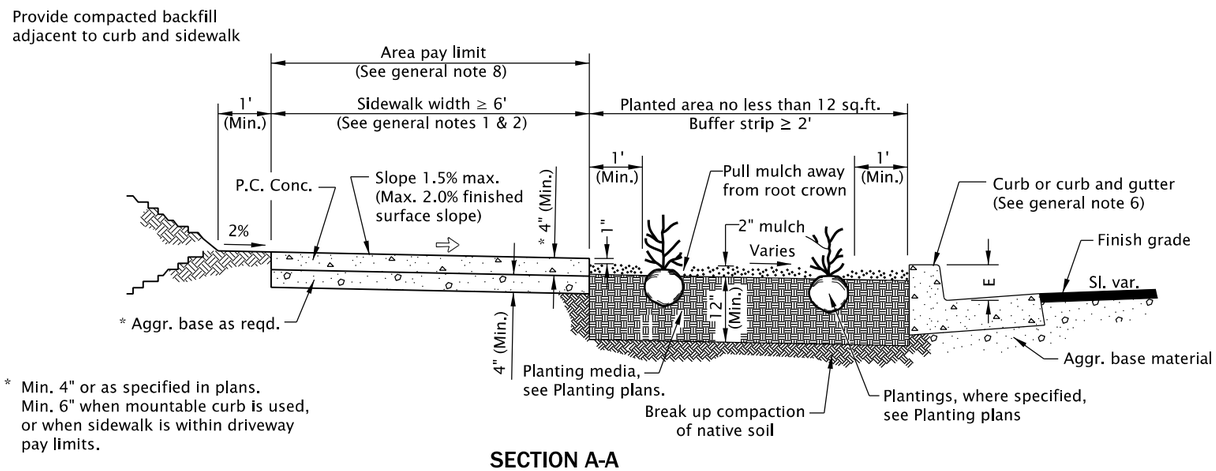

SECTION A-A

TYPICAL SETBACK SIDEWALK CROSS SECTION

E = curb exposure, see general note 6

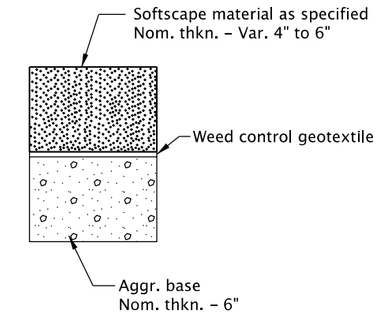

NON-PLANTED SOFTSCAPE CROSS SECTION

NOTES:
1 Use softscape materials allowed by jurisdiction.
2. Approved softscape materials:
   a) Loose, durable round rock 2"–4"in diameter
   b) Lava rock 2"–4"diameter
   c) Wood chips/bark mulch
   d) Sand
3. No crushed aggregate or pea gravel allowed.
4. Install softscape material flush with the top of sidewalk.

LEGEND

Sidewalk pay limit.

Driveway pay limit, varies by option, (See general note 8).

Cross slope 1.5% max. (Max. 2.0% finished surface slope) (Normal sidewalk cross slope)

GENERAL NOTES FOR ALL DETAILS ON THIS SHEET:

1. Include additional paved or unpaved 2' shy distance to vertical faces higher than 5' such as retaining walls, sound walls, fences and buildings.
2. Curb type and sidewalk width as shown on plans or as directed. On sidewalks 8' and wider, provide a longitudinal joint at the midpoint.
3. Install 3" pvc weep hole pipes in sidewalks where shown on plans, and allowed by jurisdiction. Place contraction joint over top of pipe. See Std. Dwg. RD700 for weep hole details.
4. Provide expansion joints around poles, posts, boxes, at ends of each driveway, and other fixtures which protrude through or against the structures. For sidewalk, monolithic curb & sidewalk, const. expansion joints at 45' maximum spacing. See Std. Dwg. RD722 for expansion joint details.
5. Const. contraction joints at 15' maximum spacing, and at ends of each curb ramp. See Std. Dwg. RD722 for contraction joint details.
6. Curb and gutter shown; see project plans for the curb design specified. For curb details, see Std. Dwgs. RD700 & RD701. ODOT standard E=7".
7. Sidewalk details are based on ODOT applicable standards.
8. Driveway encroaches into sidewalk shown; see project plans for the driveway design specified. For driveway details not shown, see Std. Dwgs. RD725, RD730, RD735, RD740, RD745 & RD750.
9. See project plans for details not shown.
10. Provide plantings in areas 12 SF or greater, as shown or directed. Treat areas less than 12 SF with mulch surfacing.

CALC. BOOK NO. N/A

SDR DATE 20-JUL-2020

NOTE: All material and workmanship shall be in accordance with the current Oregon Standard Specifications

The selection and use of this Standard Drawing, while designed in accordance with generally accepted engineering principles and practices, is the sole responsibility of the user and should not be used without consulting a Registered Professional Engineer.

OREGON STANDARD DRAWINGS

SEPARATED SIDEWALKS

2021

DATE	REVISION DESCRIPTION

rd721.dgn 20-JUL-2020

RD721

Effective Date: December 1, 2020 – May 31, 2021

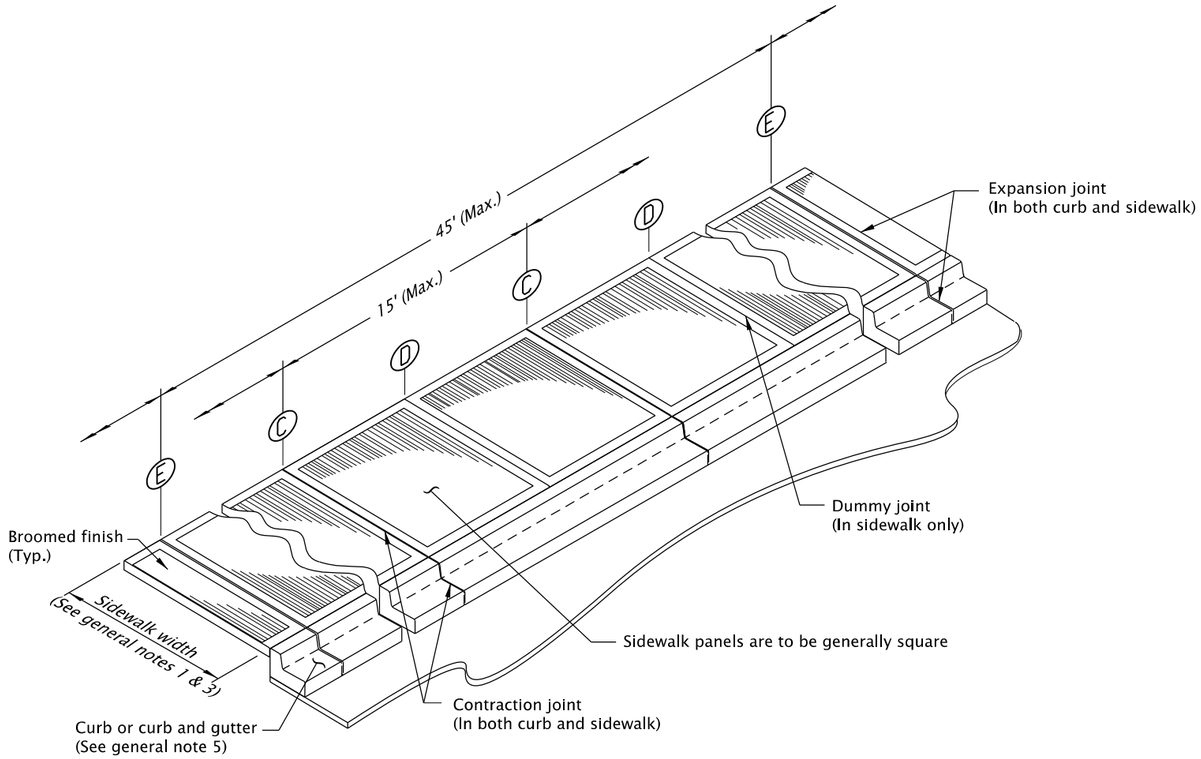

JOINT DETAIL

(Curb line sidewalk with curb and gutter shown)

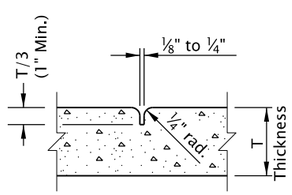

Ⓒ CONTRACTION JOINT
(See general note 6)

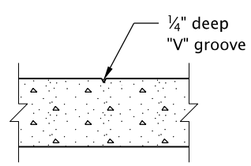

Ⓓ DUMMY JOINT

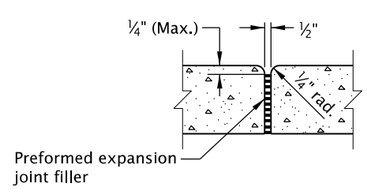

Ⓔ EXPANSION JOINT
(See general notes 2 & 5)

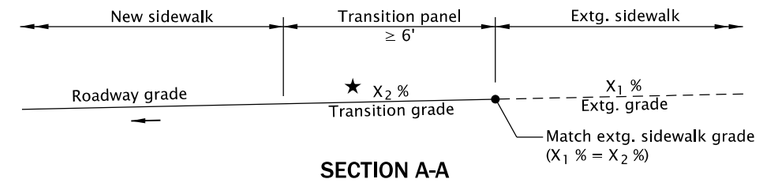

SECTION A-A
(SIDEWALK TRANSITION PANEL SHOWN)

★ Project the existing sidewalk profile grade through transition panel to new sidewalk or curb ramp run.

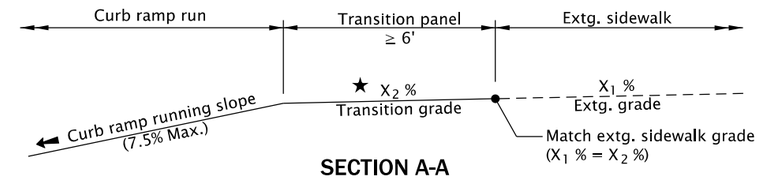

SECTION A-A
(CURB RAMP TRANSITION PANEL SHOWN)

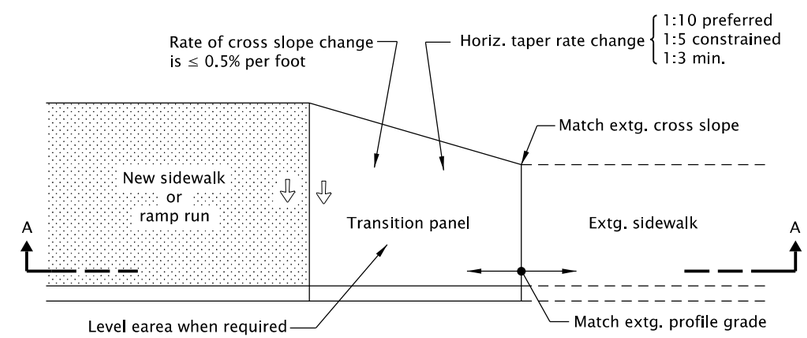

PLAN

SIDEWALK AND CURB RAMP TRANSITION PANELS

GENERAL NOTES FOR ALL DETAILS ON THIS SHEET:

1. See Std. Dwgs. RD720 & RD721 for concrete sidewalk details. See project plans for sidewalk width, placement and design specified.
2. Provide expansion joints around poles, boxes, at ends of each driveway and other fixtures which protrude through or against the structures. For sidewalk, monolithic curb and sidewalk, construction expansion joints at 45' max. spacing.
3. On sidewalks 8' and wider, provide a longitudinal joint at the midpoint of sidewalk panel.
4. See Std. Dwgs. RD700 & RD701 for concrete curb details. See project plans for the curb design specified.
5. For curb ramps, do not place expansion joints within the limits of curb ramps and between separate concrete pours.
6. Const. contraction joints at 15' max. spacing, and at each curb ramp, driveway, sidewalk and curb.

LEGEND:

- New sidewalk or ramp run
- ⇦ Slope 1.5% max. (Max. 2.0% finished surface slope) (Normal sidewalk cross slope)
- ⬅ Slope 7.5% max. (Max. 8.3% finished surface slope)
- ● Zero exposure

CALC. BOOK NO. N/A

SDR DATE 20-JUL-2020

NOTE: All material and workmanship shall be in accordance with the current Oregon Standard Specifications

The selection and use of this Standard Drawing, while designed in accordance with generally accepted engineering principles and practices, is the sole responsibility of the user and should not be used without consulting a Registered Professional Engineer.

OREGON STANDARD DRAWINGS

SIDEWALK JOINTS AND TRANSITION PANELS

2021

DATE	REVISION DESCRIPTION

rd722.dgn 20-JUL-2020

RD722

Effective Date: December 1, 2020 - May 31, 2021

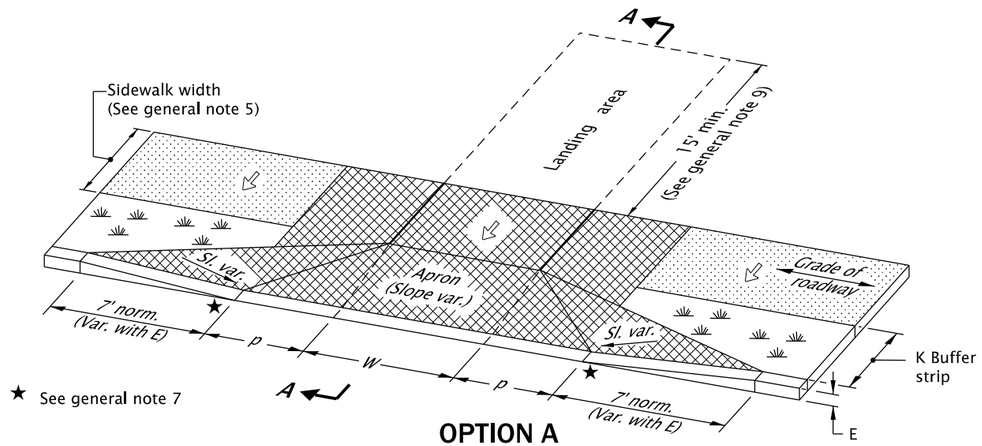

OPTION A
TYPICAL SEPARATED SIDEWALK DRIVEWAY

(Use one of the options below if slope requirements shown in Section A-A cannot be met)

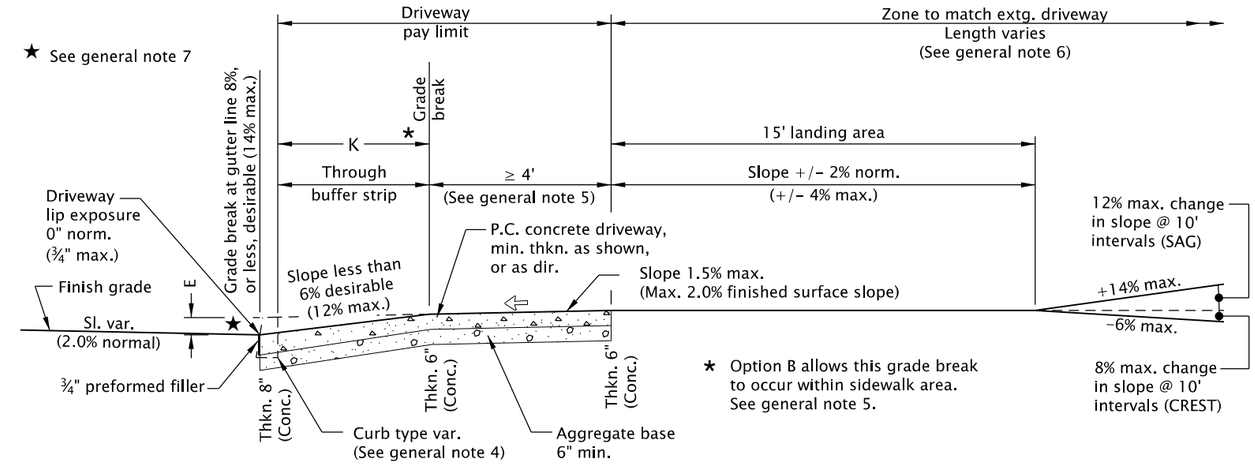

SECTION A-A

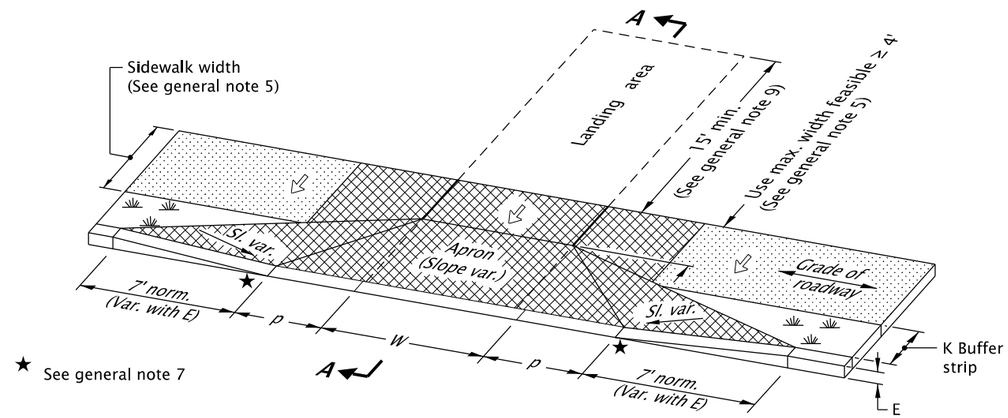

OPTION B
DRIVEWAY ENCROACHES INTO SIDEWALK

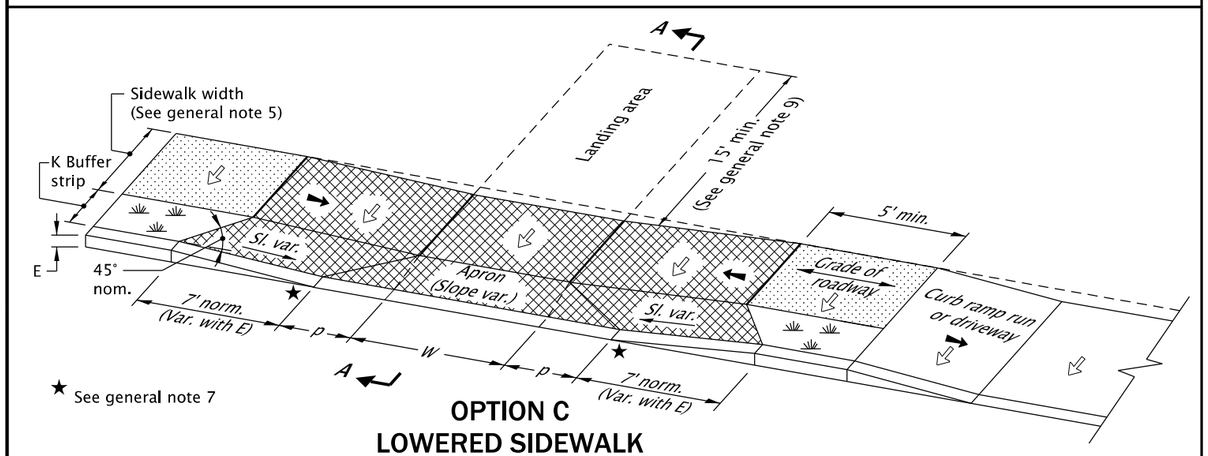

OPTION C
LOWERED SIDEWALK

GENERAL NOTES FOR ALL DETAILS ON THIS SHEET:

1. Details are based on applicable ODOT Standards.
2. Only use details allowed by jurisdiction.
3. The following dimensions are as shown on plans, or as directed: driveway width, driveway slope, sidewalk width, buffer strip width, curb exposure, driveway lip exposure, landing area length and width. See project plans for details not shown.
4. Curb, gutter, and sidewalk types varies, see plans.
   See Std. Dwgs. RD700 & RD701 for curb details.
   See Std. Dwg. RD721 for sidewalk details.
   See Std. Dwg. RD722 for joint details.
5. A greater than or equal to 4' unobstructed clear passage with cross slope 1.5% max. (Max. 2.0% finished surface slope) is required behind driveway apron. Sidewalk profile grade of the pedestrian accessible route shall not exceed the adjacent roadway profile grade.
6. Where existing driveway is in good condition, and meets slope requirements, construct only as much landing area as required for satisfactory connection with new work.
7. Check the gutter flow depth at driveway locations to assure that the design flood does not overtop the back of sidewalk at driveway. If overtopping occurs place an inlet at upstream side of driveway or perform other approved design mitigation.
8. Construct a full deph expansion joints with ½" (In) preformed joint filler at ends of each driveway. Tooled joints are required at all driveway slope break lines.
9. 15' min. of the driveway behind the sidewalk should be surfaced to prevent tracking of gravel onto the sidewalk.

LEGEND:

	Sidewalk
	Driveway pay limit (See project plans for details not shown)
⇦	Cross slope 1.5% max. (Max. 2.0% finished surface slope) (Normal sidewalk cross slope)
←	Running slope 7.5% max. (Max. 8.3% finished surface slope)
W	Width of driveway
K	Buffer strip width (5' normal, 3' min.)
E	Curb exposure
p	7.0' in commercial land use types 3.5' in residential land use types

CALC. BOOK NO. N/A

SDR DATE 20-JUL-2020

NOTE: All material and workmanship shall be in accordance with the current Oregon Standard Specifications

The selection and use of this Standard Drawing, while designed in accordance with generally accepted engineering principles and practices, is the sole responsibility of the user and should not be used without consulting a Registered Professional Engineer.

OREGON STANDARD DRAWINGS

SEPARATED SIDEWALK DRIVEWAYS OR ALLEYS (OPTIONS A, B & C) ODOT HIGHWAYS

2021

DATE	REVISION DESCRIPTION

rd725.dgn 20-JUL-2020

RD725

Effective Date: December 1, 2020 - May 31, 2021

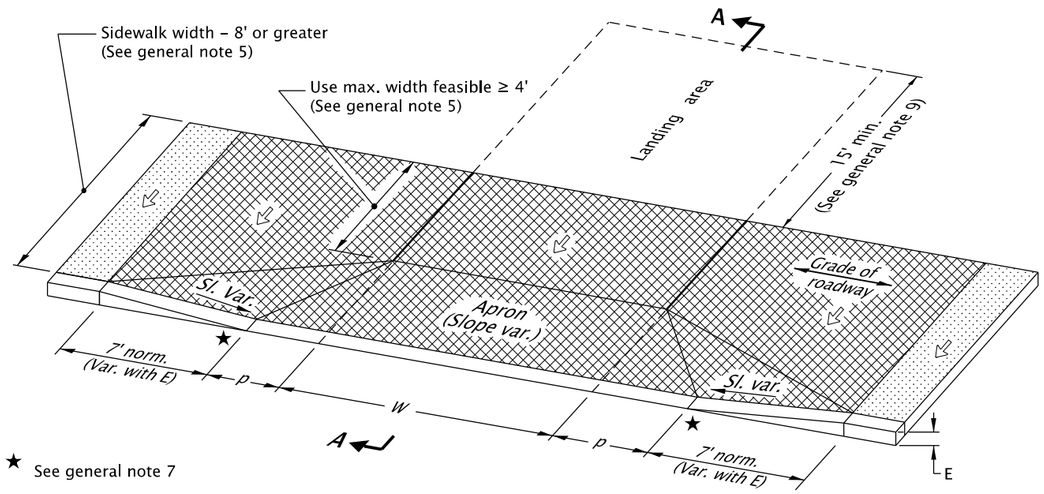

OPTION D
DRIVEWAY IN WIDE (8' OR GREATER) SIDEWALK

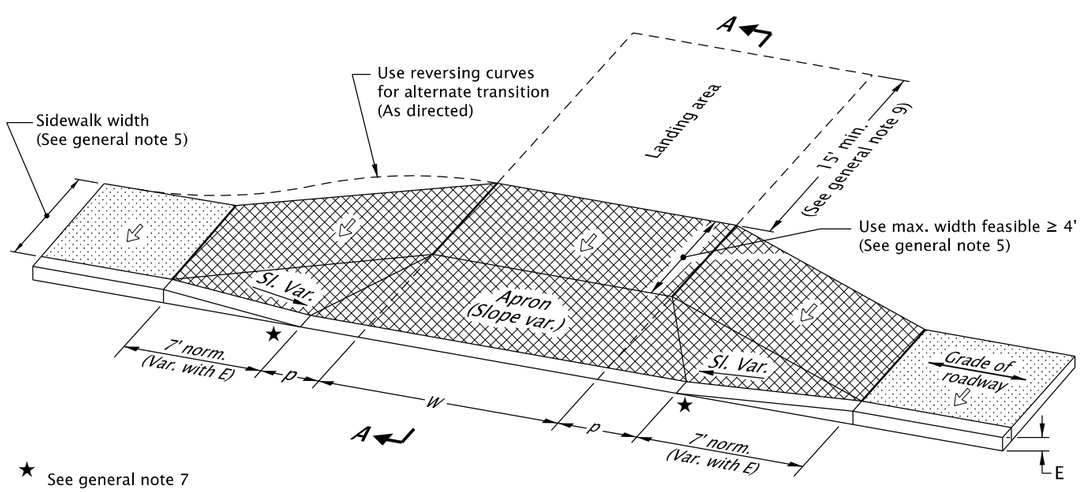

OPTION E
SIDEWALK WRAPPED AROUND DRIVEWAY

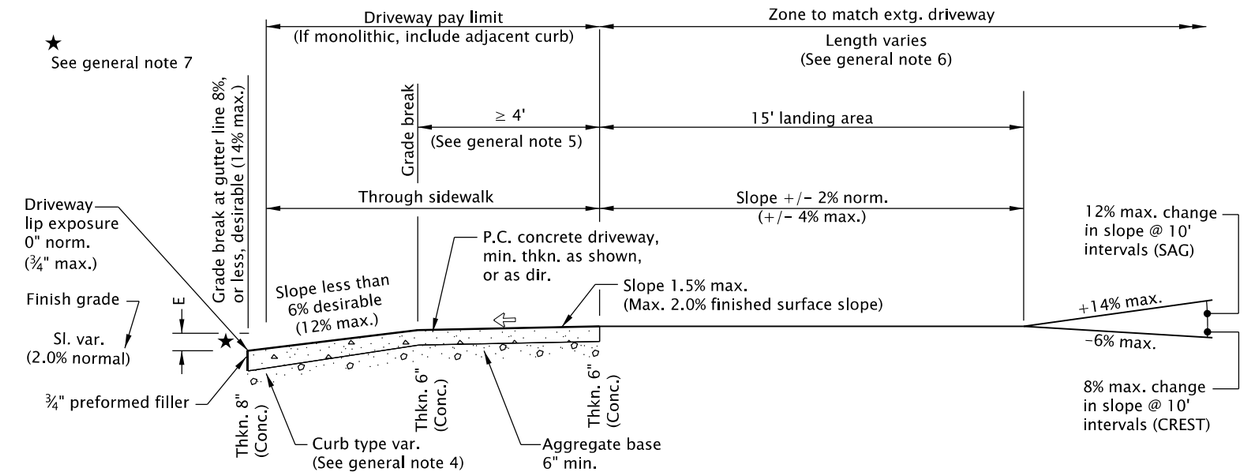

SECTION A-A

GENERAL NOTES FOR ALL DETAILS ON THIS SHEET:

1. Details are based on applicable ODOT Standards.
2. Only use details allowed by jurisdiction.
3. The following dimensions are as shown on plans, or as directed: driveway width, driveway slope, sidewalk width, curb exposure, driveway lip exposure, landing area length and width. See project plans for details not shown.
4. Curb, gutter, and sidewalk types varies, see plans.
   See Std. Dwgs. RD700 & RD701 for curb details.
   See Std. Dwg. RD720 for sidewalk details.
   See Std. Dwg. RD722 for joint details.
5. A greater than or equal 4' unobstructed clear passage with cross slope 1.5% max. (Max. 2.0% finished surface slope) is required behind driveway apron.
6. Where existing driveway is in good condition, and meets slope requirements, construct only as much landing area as required for satisfactory connection with new work.
7. Check the gutter flow depth at driveway locations to assure that the design flood does not overtop the back of sidewalk at driveway. If overtopping occurs place an inlet at upstream side of driveway or perform other approved design mitigation.
8. Construct a full deph expansion joints with 1#2" (In) preformed joint filler at ends of each driveway. Tooled joints are required at all driveway slope break lines.
9. 15' min. of the driveway behind the sidewalk should be surfaced to prevent tracking of gravel onto the sidewalk.
10. Monolithic curb & sidewalk shall retain thickened edge through lowered profile, to accommodate driveway use. See Std. Dwg. RD720 for details.

LEGEND:

	Sidewalk
	Driveway pay limit (If monolithic, include adjacent curb) (See project plans for details not shown)
⇦	Cross slope 1.5% max. (Max. 2.0% finished surface slope) (Normal sidewalk cross slope)
W	Width of driveway
E	Curb exposure
p	7.0' in commercial land use types 3.5' in residential land use types

CALC. BOOK NO. N/A

SDR DATE 20-JUL-2020

NOTE: All material and workmanship shall be in accordance with the current Oregon Standard Specifications

The selection and use of this Standard Drawing, while designed in accordance with generally accepted engineering principles and practices, is the sole responsibility of the user and should not be used without consulting a Registered Professional Engineer.

OREGON STANDARD DRAWINGS

CURB LINE SIDEWALK DRIVEWAYS OR ALLEYS (OPTIONS D & E) ODOT HIGHWAYS

2021

DATE	REVISION DESCRIPTION

rd730.dgn 20-JUL-2020

RD730

Effective Date: December 1, 2020 - May 31, 2021

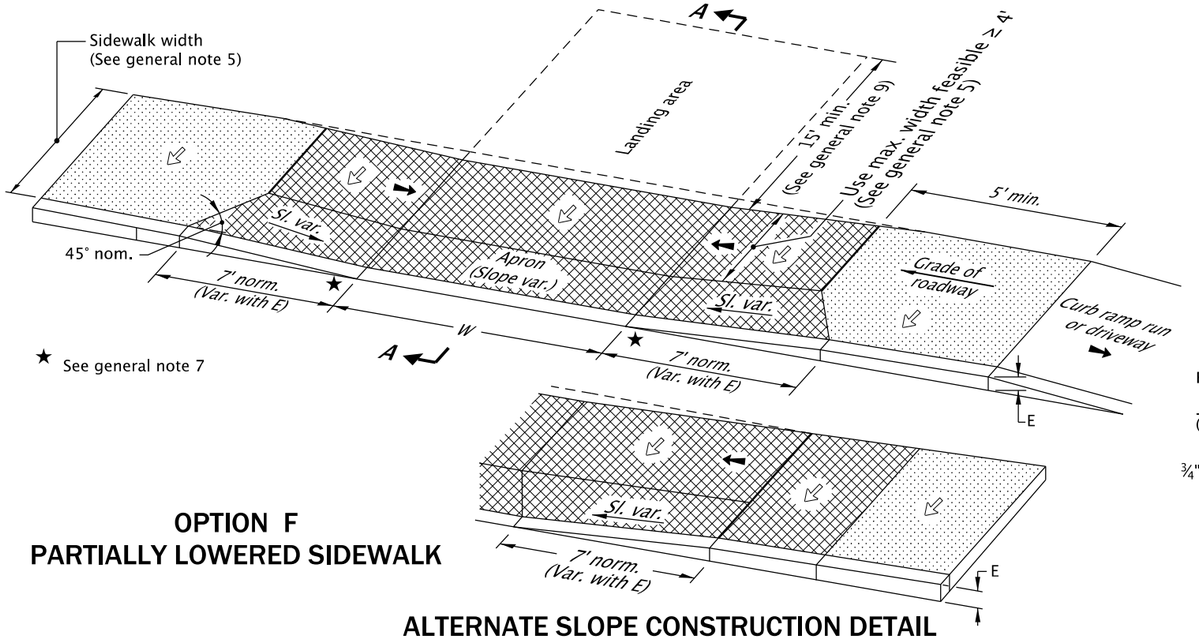

OPTION F
PARTIALLY LOWERED SIDEWALK

ALTERNATE SLOPE CONSTRUCTION DETAIL

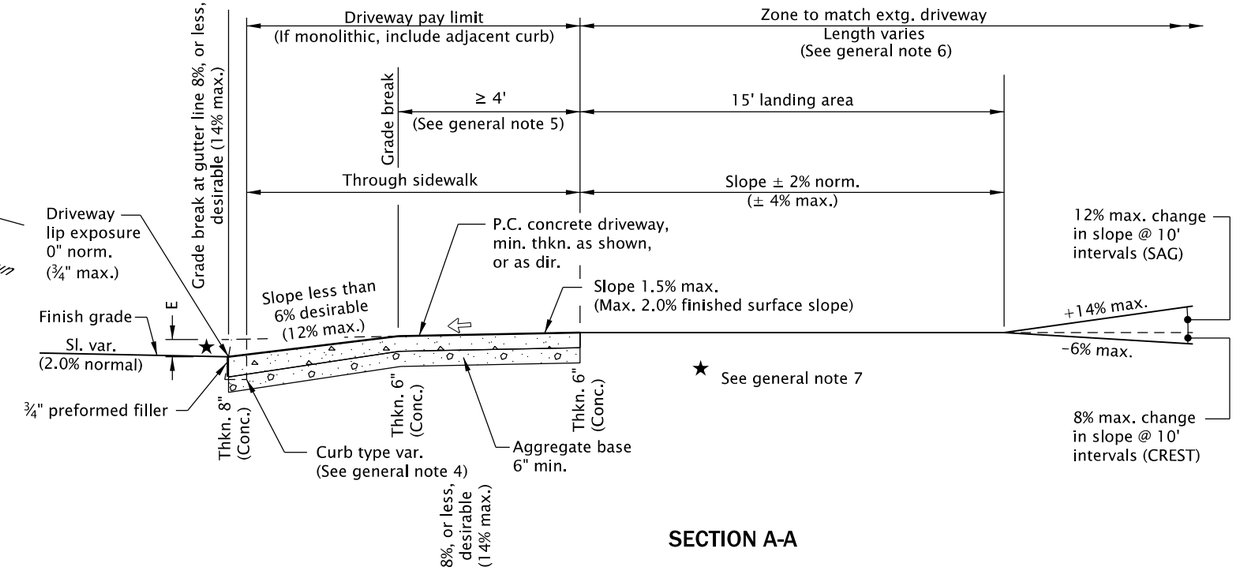

SECTION A-A

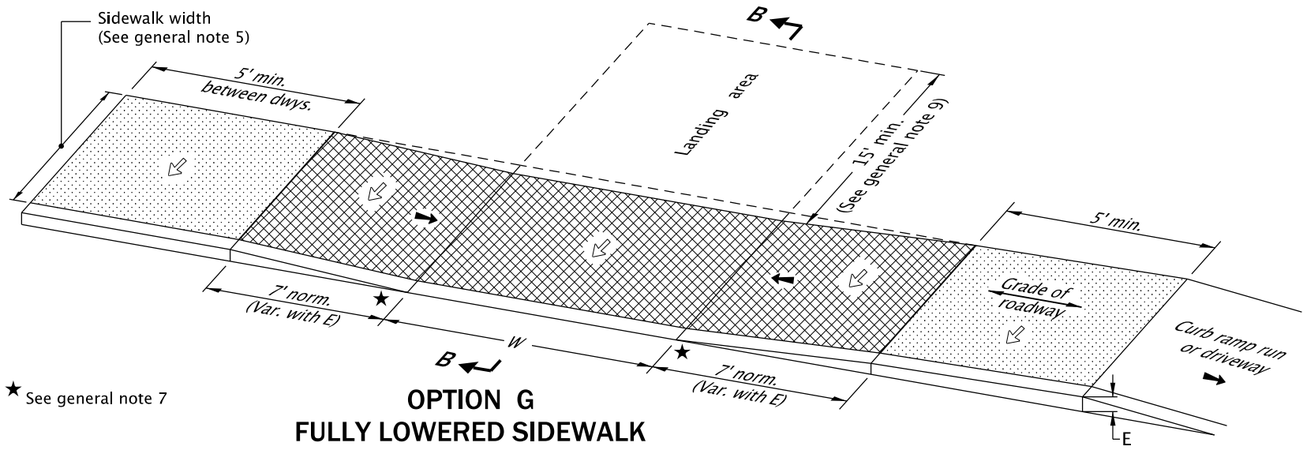

OPTION G
FULLY LOWERED SIDEWALK

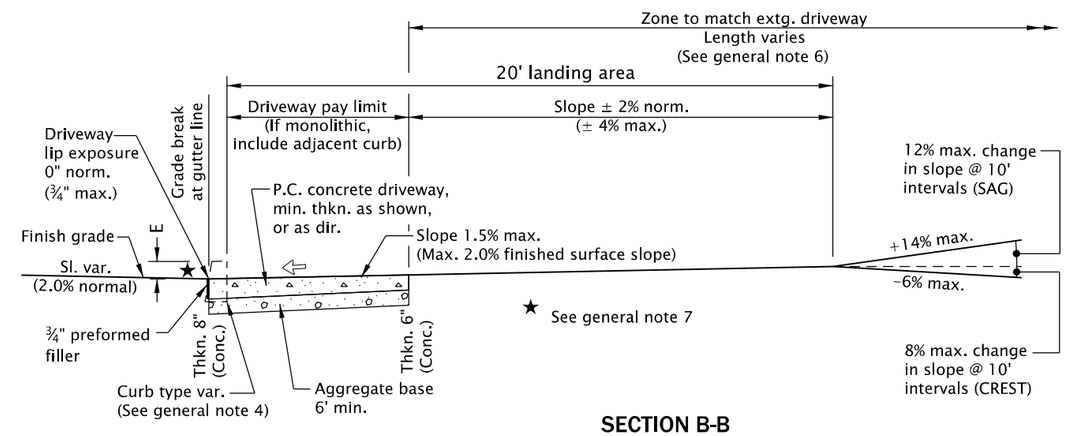

SECTION B-B

GENERAL NOTES FOR ALL DETAILS ON THIS SHEET:

1. Details are based on applicable ODOT Standards.
2. Only use details allowed by jurisdiction.
3. The following dimensions are as shown on plans, or as directed: driveway width, driveway slope, sidewalk width, curb exposure, driveway lip exposure, landing area length and width. See project plans for details not shown.
4. Curb, gutter, and sidewalk types varies, see plans.
   See Std. Dwgs. RD700 & RD701 for curb details.
   See Std. Dwg. RD720 for sidewalk details.
   See Std. Dwg. RD722 for joint details.
5. A greater than or equal 4' unobstructed clear passage with cross slope 1.5% max. (Max. 2.0% finished surface slope) is required behind driveway apron.
6. Where existing driveway is in good condition, and meets slope requirements, construct only as much landing area as required for satisfactory connection with new work.
7. Check the gutter flow depth at driveway locations to assure that the design flood does not overtop the back of sidewalk at driveway. If overtopping occurs place an inlet at upstream side of driveway or perform other approved design mitigation.
8. Construct a full deph expansion joints with 1#2" (In) preformed joint filler at ends of each driveway. Tooled joints are required at all driveway slope break lines.
9. 15' min. of the driveway behind the sidewalk should be surfaced to prevent tracking of gravel onto the sidewalk.
10. Monolithic curb & sidewalk shall retain thickened edge through lowered profile, to accommodate driveway use. See Std. Dwg. RD720 for details.

LEGEND:

	Sidewalk
	Driveway pay limit (If monolithic, include adjacent curb) (See project plans for details not shown)
⇦	Cross slope 1.5% max. (Max. 2.0% finished surface slope) (Normal sidewalk cross slope)
⬅	Running slope 7.5% max. (Max. 8.3% finished surface slope)
W	Width of driveway
E	Curb exposure

CALC. BOOK NO. N/A

SDR DATE 20-JUL-2020

NOTE: All material and workmanship shall be in accordance with the current Oregon Standard Specifications

The selection and use of this Standard Drawing, while designed in accordance with generally accepted engineering principles and practices, is the sole responsibility of the user and should not be used without consulting a Registered Professional Engineer.

OREGON STANDARD DRAWINGS

CURB LINE SIDEWALK DRIVEWAYS OR ALLEYS (OPTIONS F & G) ODOT HIGHWAYS

2021

DATE	REVISION DESCRIPTION

Effective Date: December 1, 2020 - May 31, 2021

RD735

rd735.dgn 20-JUL-2020

RD735

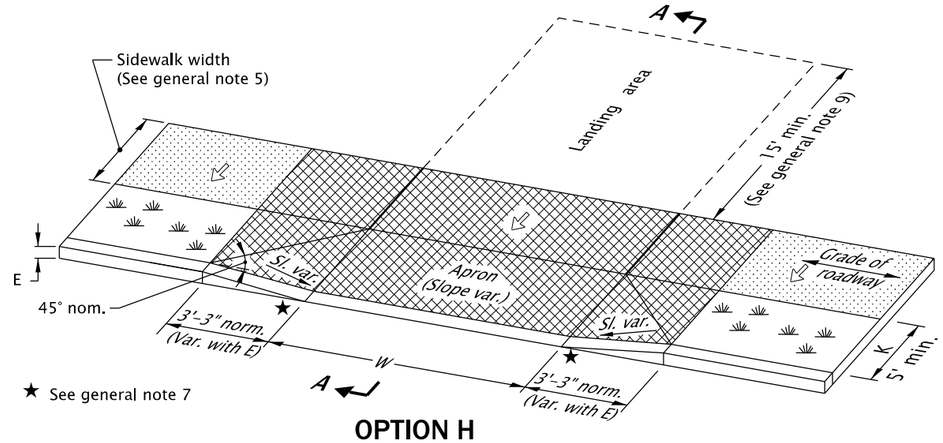

OPTION H
TYPICAL SEPARATED SIDEWALK DRIVEWAY

(Use one of the options below if slope requirements shown in Section A-A cannot be met)

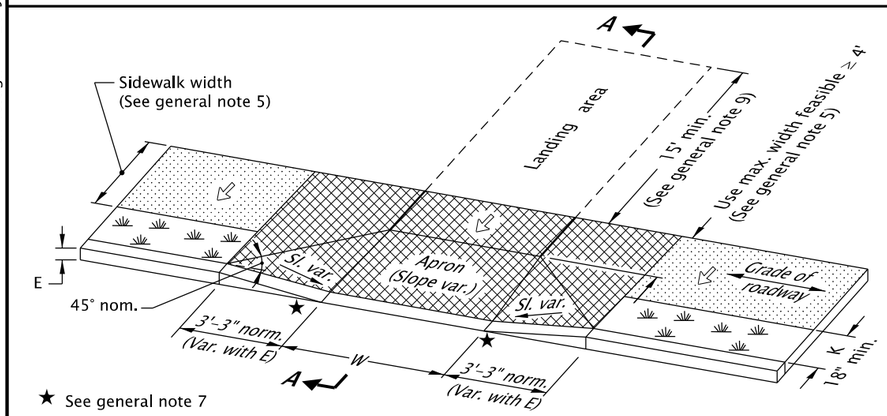

OPTION I
DRIVEWAY ENCROACHES INTO SIDEWALK

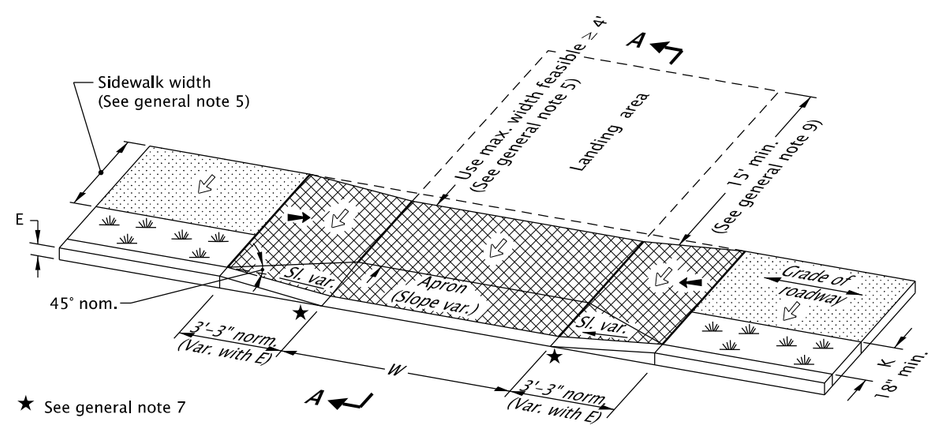

OPTION J
LOWERED SIDEWALK

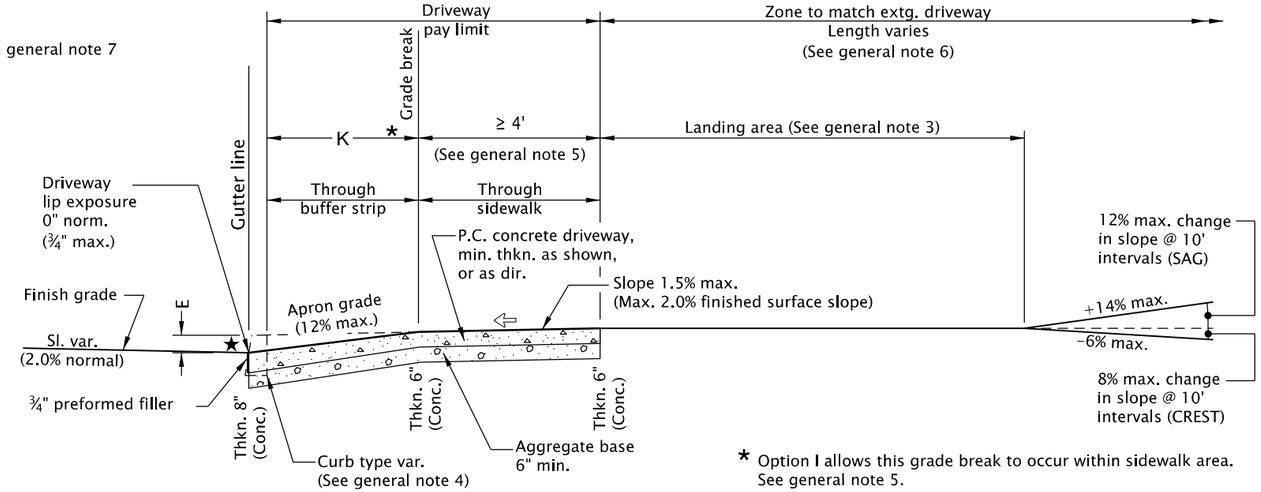

SECTION A-A

GENERAL NOTES FOR ALL DETAILS ON THIS SHEET:

1. Details are based on applicable ODOT Standards.
2. Only use details allowed by jurisdiction.
3. The following dimensions are as shown on plans, or as directed: driveway width, driveway slope, sidewalk width, buffer strip width, curb exposure, driveway lip exposure, landing area length and width. See project plans for details not shown.
4. Curb, gutter, and sidewalk types varies, see plans.
   See Std. Dwgs. RD700 & RD701 for curb details.
   See Std. Dwg. RD721 for sidewalk details.
   See Std. Dwg. RD722 for joint details.
5. A greater than or equal 4' unobstructed clear passage with cross slope 1.5% max. (Max. 2.0% finished surface slope) is required behind driveway apron.
6. Where existing driveway is in good condition, and meets slope requirements, construct only as much landing area as required for satisfactory connection with new work.
7. Check the gutter flow depth at driveway locations to assure that the design flood does not overtop the back of sidewalk at driveway. If overtopping occurs place an inlet at upstream side of driveway or perform other approved design mitigation.
8. Construct a full deph expansion joints with 1#2" (In) preformed joint filler at ends of each driveway. Tooled joints are required at all driveway slope break lines.
9. 15' min. of the driveway behind the sidewalk should be surfaced to prevent tracking of gravel onto the sidewalk.
10. Any dimensions except those of general note 5 may be amended by local agencies for their use.

LEGEND:

- Sidewalk
- Driveway pay limit (See project plans for details not shown)
- ⇦ Cross slope 1.5% max. (Max. 2.0% finished surface slope) (Normal sidewalk cross slope)
- ⬅ Running slope 7.5% max. (Max. 8.3% finished surface slope)

W Width of driveway
K Buffer strip width
E Curb exposure

NOTE:
This drawing is to be used by local agencies to assist them in the design of driveways on their facilities.

CALC. BOOK NO. N/A

SDR DATE 20-JUL-2020

NOTE: All material and workmanship shall be in accordance with the current Oregon Standard Specifications

The selection and use of this Standard Drawing, while designed in accordance with generally accepted engineering principles and practices, is the sole responsibility of the user and should not be used without consulting a Registered Professional Engineer.

OREGON STANDARD DRAWINGS

SEPARATED SIDEWALK DRIVEWAYS OR ALLEYS (OPTIONS H, I & J) LOCAL JURISDICTIONS

2021

DATE	REVISION DESCRIPTION

rd740.dgn 20-JUL-2020

RD740

Effective Date: December 1, 2020 - May 31, 2021

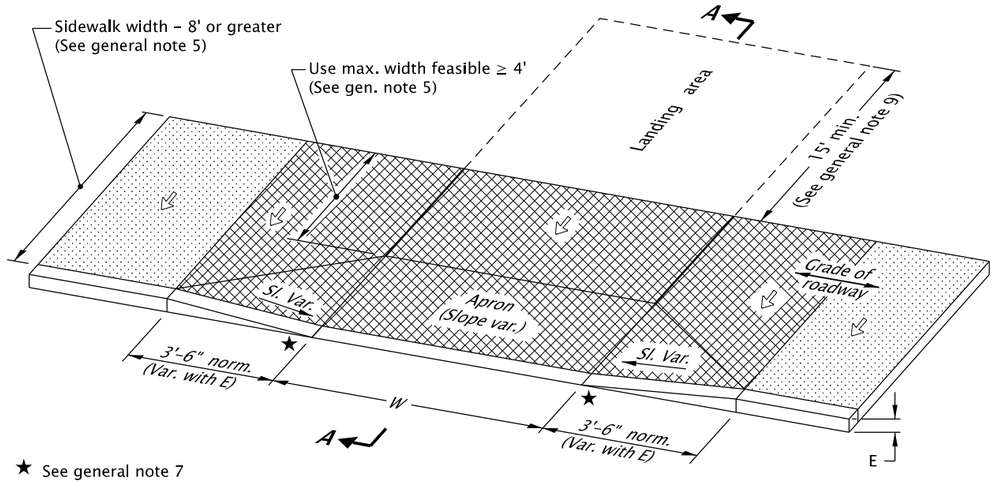

OPTION K
DRIVEWAY IN WIDE (8' OR GREATER) SIDEWALK

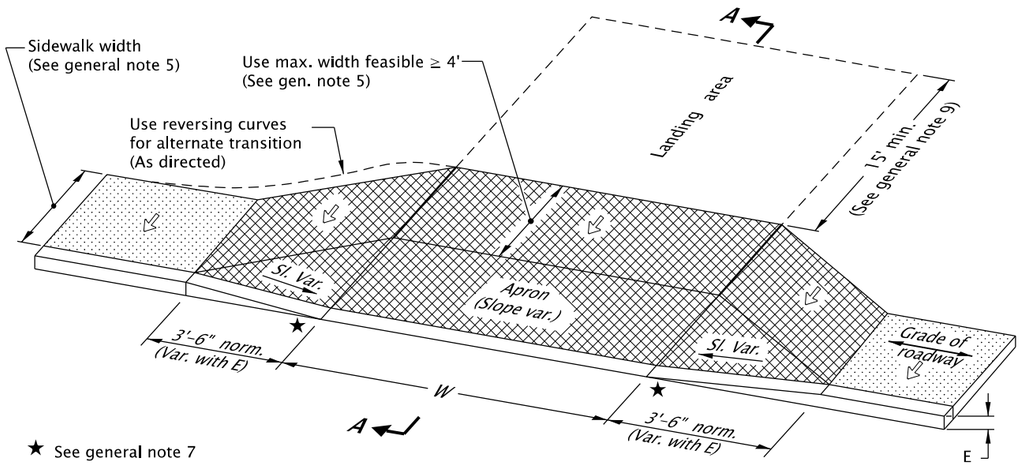

OPTION L
SIDEWALK WRAPPED AROUND DRIVEWAY

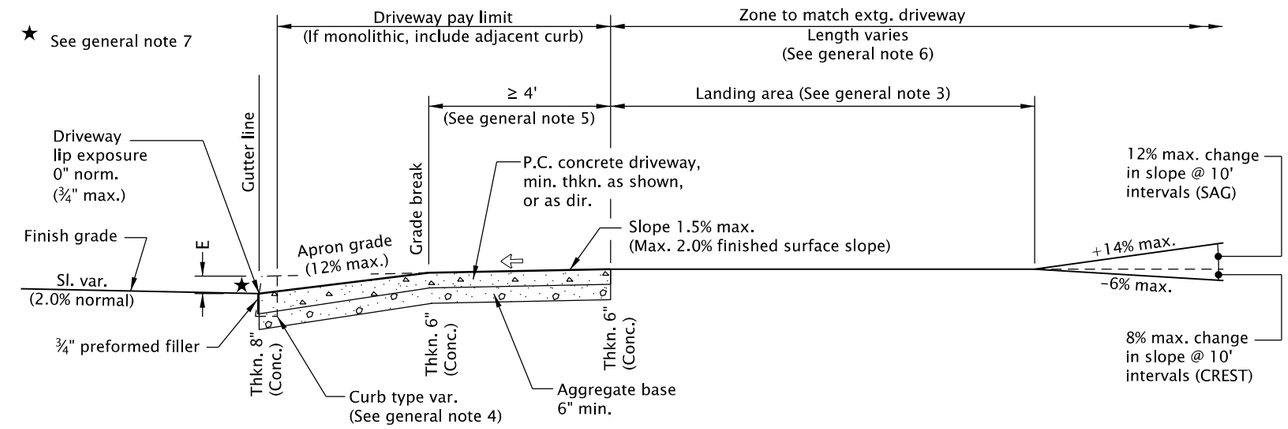

SECTION A-A

GENERAL NOTES FOR ALL DETAILS ON THIS SHEET:

1. Details are based on applicable ODOT Standards.
2. Only use details allowed by jurisdiction.
3. The following dimensions are as shown on plans, or as directed: driveway width, driveway slope, sidewalk width, curb exposure, driveway lip exposure, landing area length and width. See project plans for details not shown.
4. Curb, gutter, and sidewalk types varies, see plans.
   See Std. Dwgs. RD700 & RD701 for curb details.
   See Std. Dwg. RD720 for sidewalk details
   See Std. Dwg. RD722 for joint details.
5. A greater than or equal 4' unobstructed clear passage with cross slope 1.5% max. (Max. 2.0% finished surface slope) is required behind driveway apron.
6. Where existing driveway is in good condition, and meets slope requirements, construct only as much landing area as required for satisfactory connection with new work.
7. Check the gutter flow depth at driveway locations to assure that the design flood does not overtop the back of sidewalk at driveway. If overtopping occurs place an inlet at upstream side of driveway or perform other approved design mitigation.
8. Construct a full deph expansion joints with 1#2" (In) preformed joint filler at ends of each driveway. Tooled joints are required at all driveway slope break lines.
9. 15' min. of the driveway behind the sidewalk should be surfaced to prevent tracking of gravel onto the sidewalk.
10. Monolithic curb & sidewalk shall retain thickened edge through lowered profile, to accommodate driveway use. See Std. Dwg. RD720 for details.
11. Any dimensions except those of general note 5 may be amended by local agencies for their use.

LEGEND:

- Sidewalk
- Driveway pay limit (If monolithic, include adjacent curb) (See project plans for details not shown)
- ⇦ Cross slope 1.5% max. (Max. 2.0% finished surface slope) (Normal sidewalk cross slope)
- W — Width of driveway
- E — Curb exposure

NOTE:
This drawing is to be used by local agencies to assist them in the design of driveways on their facilities.

CALC. BOOK NO. N/A

SDR DATE 20-JUL-2020

NOTE: All material and workmanship shall be in accordance with the current Oregon Standard Specifications

The selection and use of this Standard Drawing, while designed in accordance with generally accepted engineering principles and practices, is the sole responsibility of the user and should not be used without consulting a Registered Professional Engineer.

OREGON STANDARD DRAWINGS

CURB LINE SIDEWALK DRIVEWAYS OR ALLEYS (OPTIONS K & L) LOCAL JURISDICTIONS

2021

DATE	REVISION DESCRIPTION

rd745.dgn 20-JUL-2020

RD745

Effective Date: December 1, 2020 - May 31, 2021

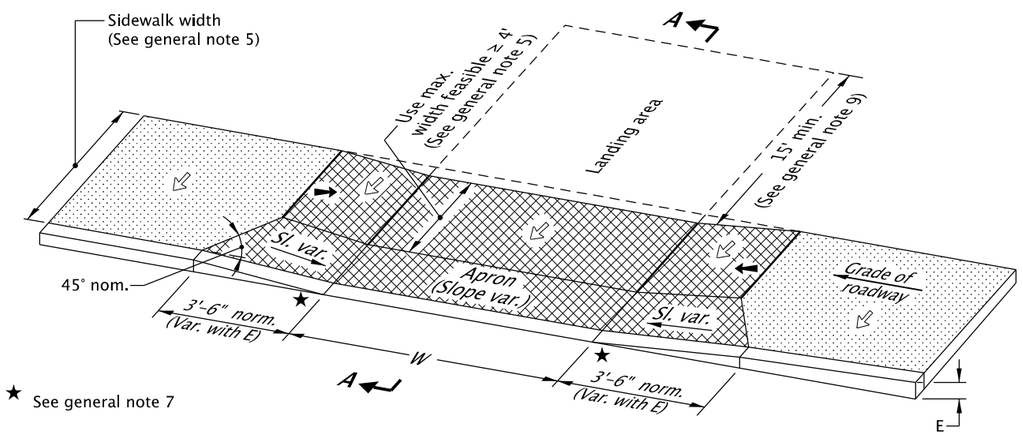

OPTION M
PARTIALLY LOWERED SIDEWALK

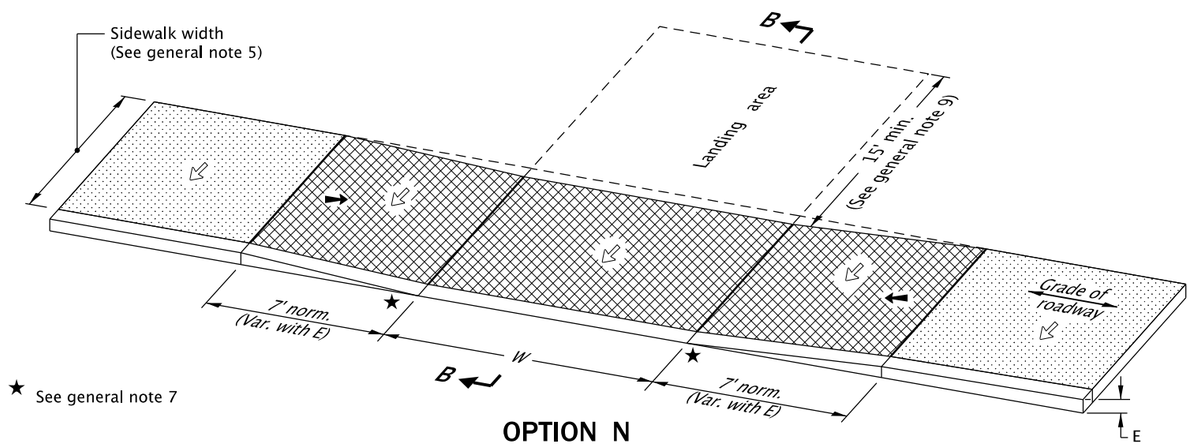

OPTION N
FULLY LOWERED SIDEWALK

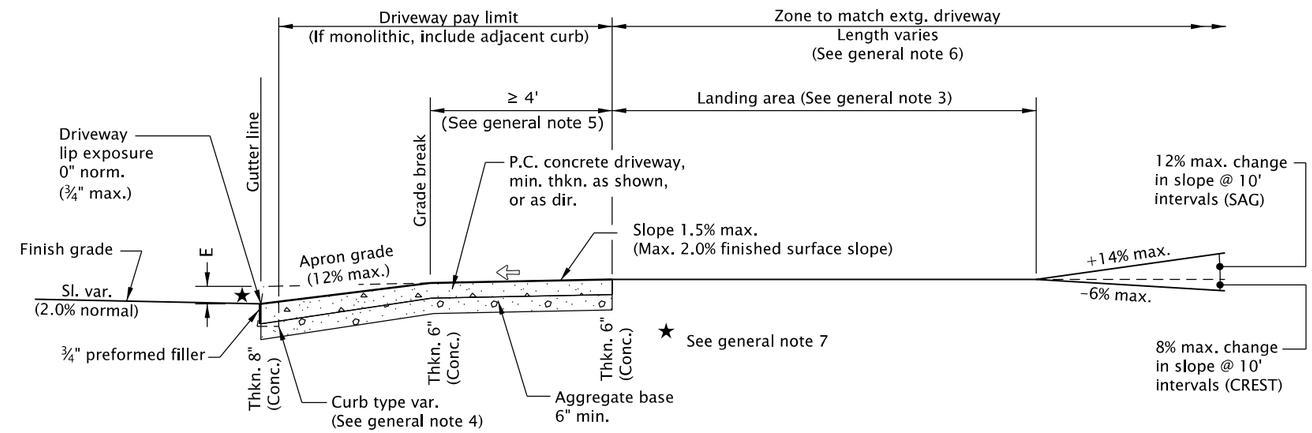

SECTION A-A

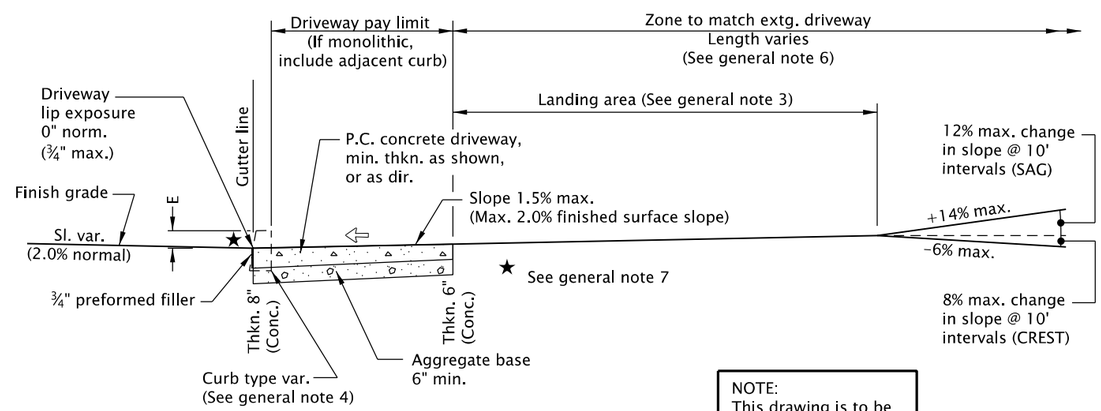

SECTION B-B

NOTE:
This drawing is to be used by local agencies to assist them in the design of driveways on their facilities.

GENERAL NOTES FOR ALL DETAILS ON THIS SHEET:

1. Details are based on applicable ODOT Standards.
2. Only use details allowed by jurisdiction.
3. The following dimensions are as shown on plans, or as directed: driveway width, driveway slope, sidewalk width, curb exposure, driveway lip exposure, landing area length and width. See project plans for details not shown.
4. Curb, gutter, and sidewalk types varies, see plans.
   See Std. Dwgs. RD700 & RD701 for curb details.
   See Std. Dwg. RD720 for sidewalk details
   See Std. Dwg. RD722 for joint details.
5. A greater than or equal 4' unobstructed clear passage with cross slope 1.5% max. (Max. 2.0% finished surface slope) is required behind driveway apron.
6. Where existing driveway is in good condition, and meets slope requirements, construct only as much landing area as required for satisfactory connection with new work.
7. Check the gutter flow depth at driveway locations to assure that the design flood does not overtop the back of sidewalk at driveway.
   If overtopping occurs place an inlet at upstream side of driveway or perform other approved design mitigation.
8. Construct a full deph expansion joints with 1#2" (In) preformed joint filler at ends of each driveway.
   Tooled joints are required at all driveway slope break lines.
9. 15' min. of the driveway behind the sidewalk should be surfaced to prevent tracking of gravel onto the sidewalk.
10. Monolithic curb & sidewalk shall retain thickened edge through lowered profile, to accommodate driveway use. See Std. Dwg. RD720 for details.
11. Any dimensions except those of general note 5 may be amended by local agencies for their use.

LEGEND:

- Sidewalk
- Driveway pay limit (If monolithic, include adjacent curb) (See project plans for details not shown)
- ⇦ Cross slope 1.5% max. (Max. 2.0% finished surface slope) (Normal sidewalk cross slope)
- ⬅ Running slope 7.5% max. (Max. 8.3% finished surface slope)
- W Width of driveway
- E Curb exposure

CALC. BOOK NO. N/A

SDR DATE 20-JUL-2020

NOTE: All material and workmanship shall be in accordance with the current Oregon Standard Specifications

The selection and use of this Standard Drawing, while designed in accordance with generally accepted engineering principles and practices, is the sole responsibility of the user and should not be used without consulting a Registered Professional Engineer.

OREGON STANDARD DRAWINGS

CURB LINE SIDEWALK DRIVEWAYS OR ALLEYS (OPTIONS M & N) LOCAL JURISDICTIONS

2021

DATE	REVISION DESCRIPTION

rd750.dgn 20-JUL-2020

RD750

Effective Date: December 1, 2020 - May 31, 2021

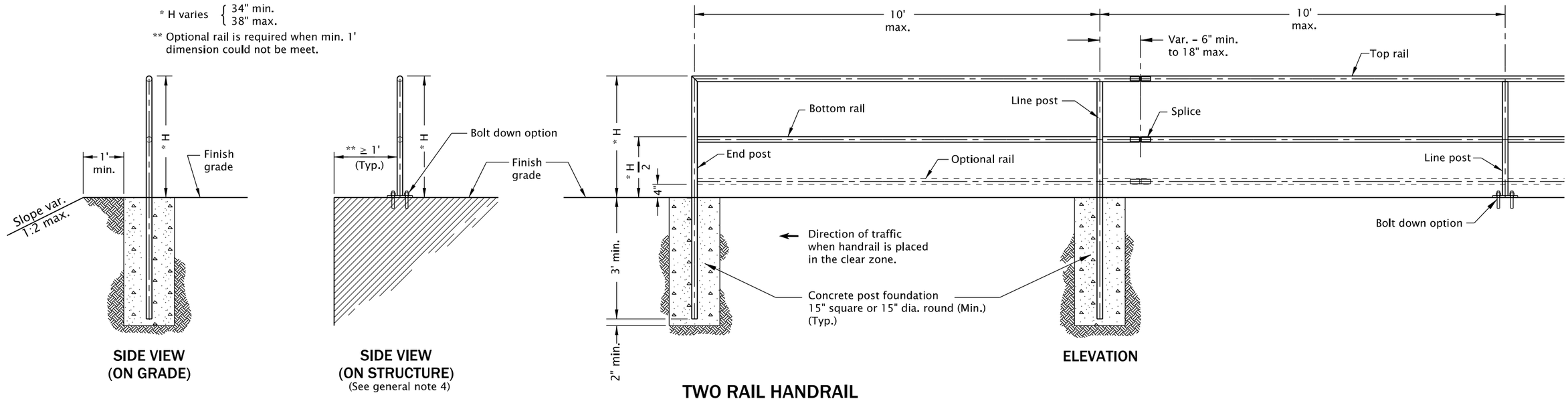

TWO RAIL HANDRAIL

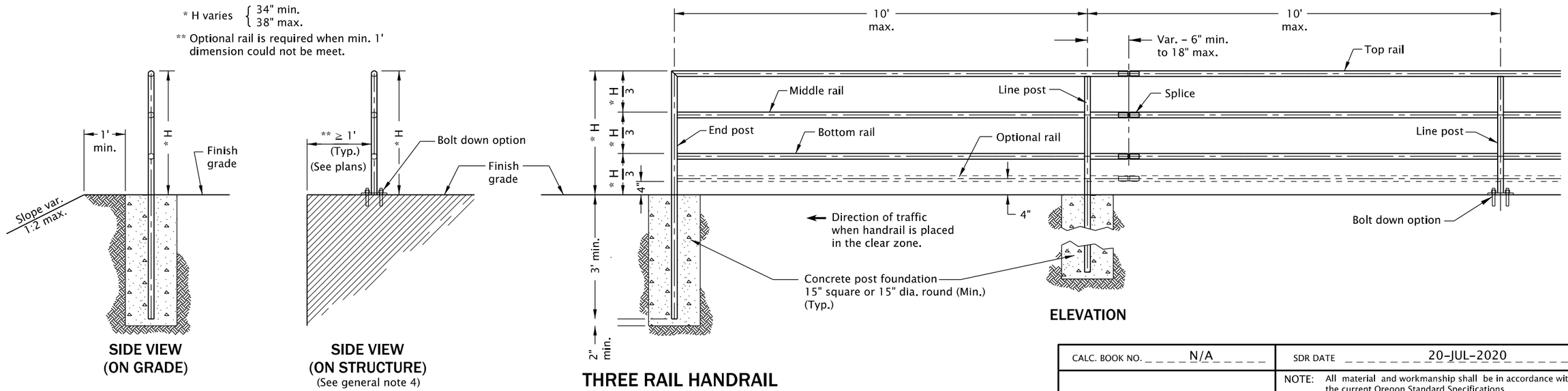

THREE RAIL HANDRAIL

GENERAL NOTES FOR ALL DETAILS ON THIS SHEET:

1. Handrail details are based on applicable ODOT Standards.
2. See Std. Dwg. RD771 for details not shown.
3. Hot-dip galvanize all metal parts after fabrication.
4. Structure varies, see project plans.
5. Handrail height (H) shall be constant within a ramp run or stairway.
6. All concrete shall be commercial grade concrete.
7. See Std. Dwg. RD120 for concrete stairway.
8. See project plans for details not shown.

CALC. BOOK NO. N/A

SDR DATE 20-JUL-2020

NOTE: All material and workmanship shall be in accordance with the current Oregon Standard Specifications

The selection and use of this Standard Drawing, while designed in accordance with generally accepted engineering principles and practices, is the sole responsibility of the user and should not be used without consulting a Registered Professional Engineer.

OREGON STANDARD DRAWINGS

METAL HANDRAIL

2021

DATE	REVISION DESCRIPTION

Effective Date: December 1, 2020 - May 31, 2021

rd770.dgn 20-JUL-2020

RD770

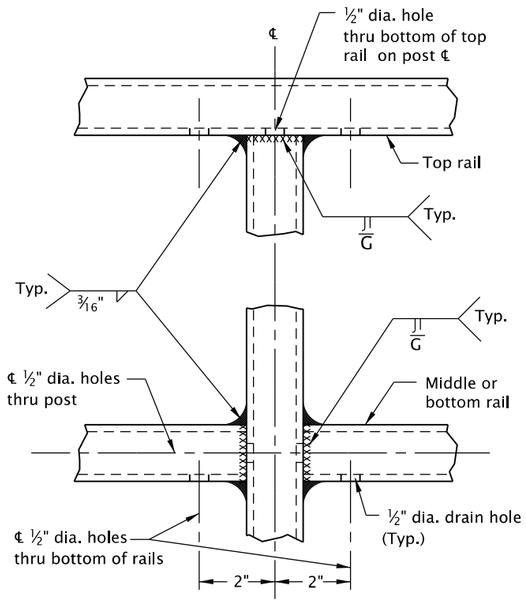

WELD DETAILS FOR STEEL TUBING

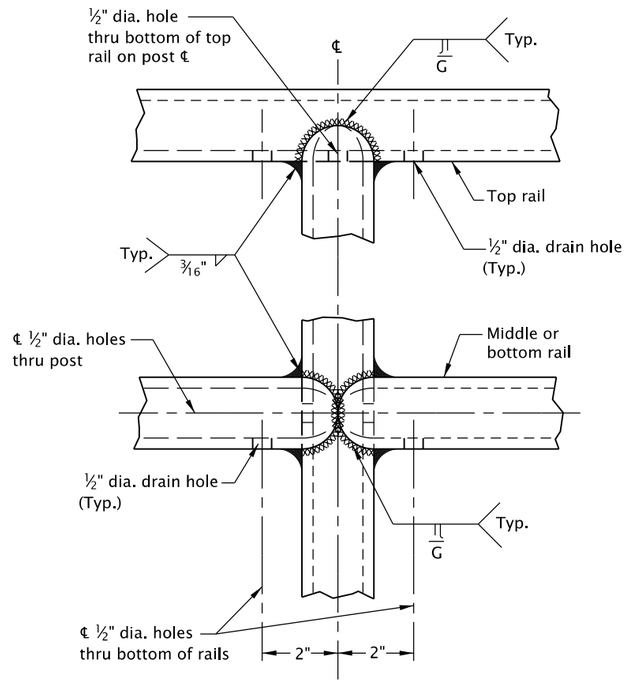

WELD DETAILS FOR STEEL PIPE

MATERIAL TABLES

STEEL PIPE POST & RAIL MEMBERS				ROUND SPLICE BAR
NOM. DIA.	SCH.	O.D.	I.D.	O.D.
1¼"	40	1.660"	1.380"	1¼"
1½"	10	1.900"	1.682"	1½"
	40	1.900"	1.610"	

SQUARE STRUCTURAL STEEL TUBING POST & RAIL MEMBERS		SQUARE SPLICE BAR
Outside Dimensions	Wall Thickness	Outside Dimensions
1½"x1½"	⅛"	1"x1 "
	3/16"	¾"x¾"

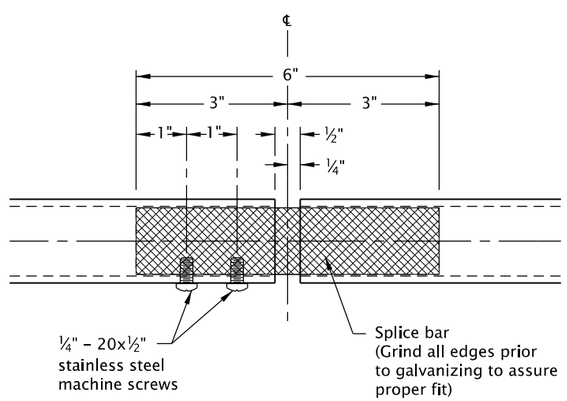

SPLICE DETAIL

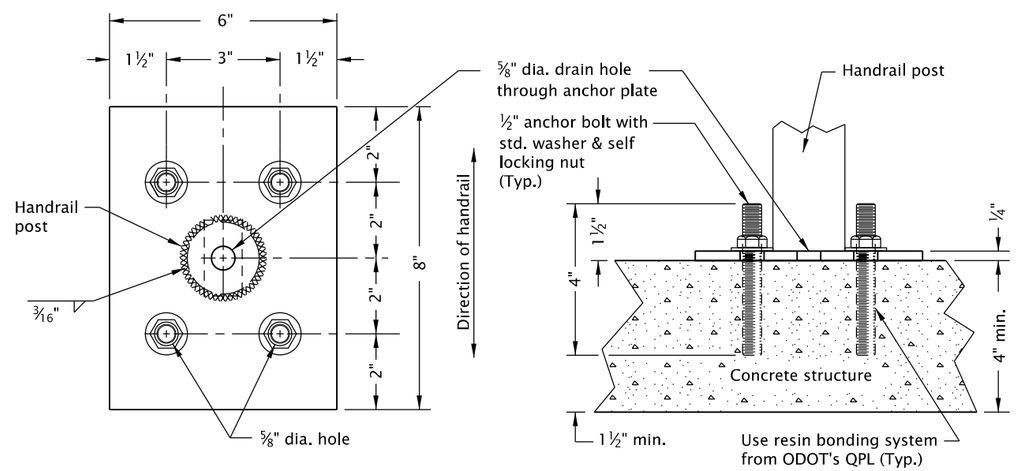

ANCHOR PLATE FOR BOLT DOWN OPTION

GENERAL NOTES FOR ALL DETAILS ON THIS SHEET:

1. Handrail details are based on applicable ODOT Standards.
2. Select materials from tables. Posts and rails shall be identical material. Structural steel tubing shall conform to ASTM specification A500, grade B.
3. Posts shall be vertical. The top rail shall be continuous over a minimum of two posts.
4. On structure, the railing shall conform to the vertical alignment of the structure. Rails shall have a splice in the post space occurring at expansion joints.
5. On grade, rails shall have splices at intervals not to exceed 100'.
6. Hot-dip galvanize all metal parts after fabrication.
7. See Std Dwg. RD770 for details not shown.
8. See Std Dwg. RD120 for concrete stairway.
9. See project plans for details not shown.

CALC. BOOK NO. N/A

SDR DATE 20-JUL-2020

NOTE: All material and workmanship shall be in accordance with the current Oregon Standard Specifications

The selection and use of this Standard Drawing, while designed in accordance with generally accepted engineering principles and practices, is the sole responsibility of the user and should not be used without consulting a Registered Professional Engineer.

OREGON STANDARD DRAWINGS

METAL HANDRAIL DETAILS

2021

DATE	REVISION DESCRIPTION

rd771.dgn 20-JUL-2020

RD771

Effective Date: December 1, 2020 - May 31, 2021

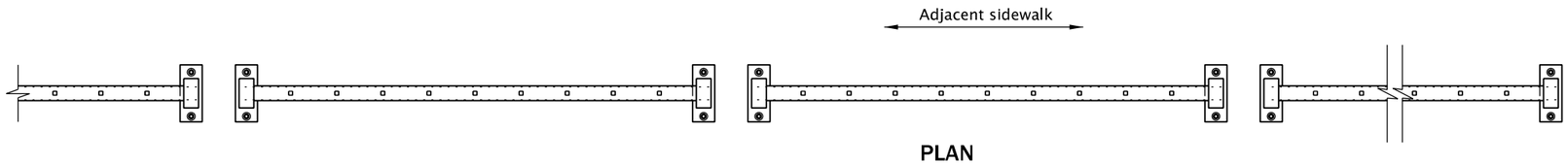

PLAN

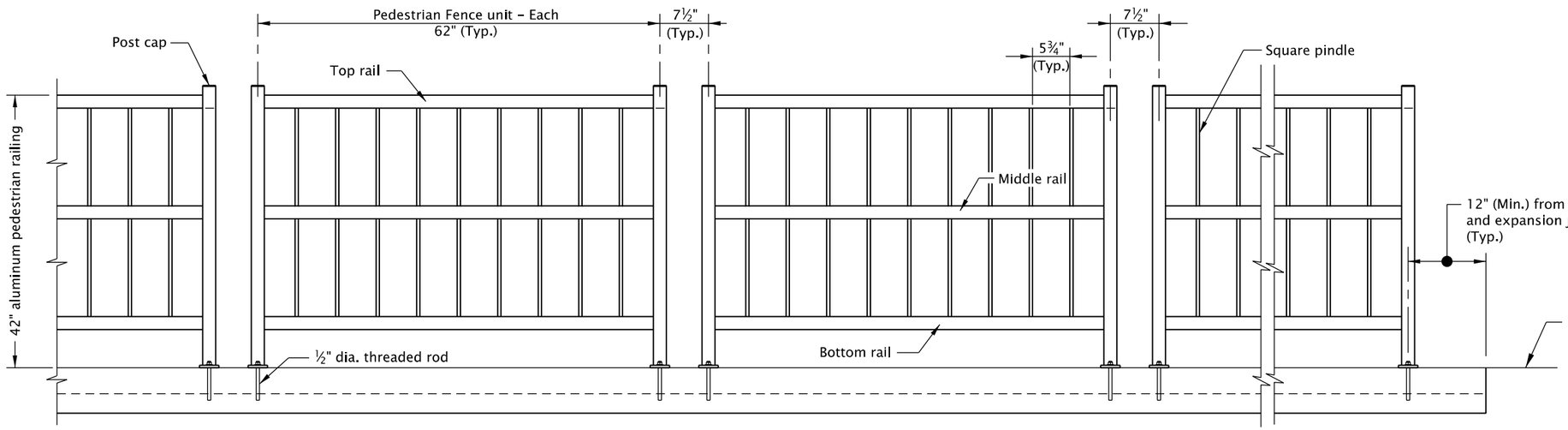

ELEVATION

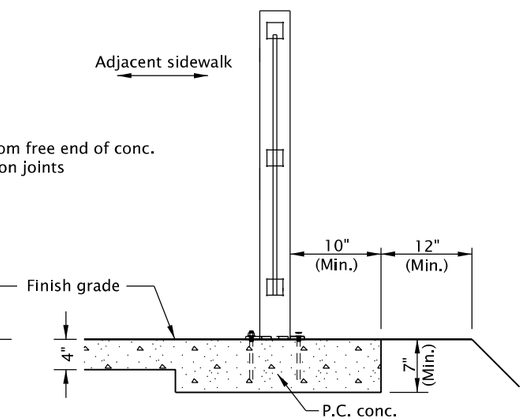

SECTION

ALUMNUM PEDESTRIAN FENCE

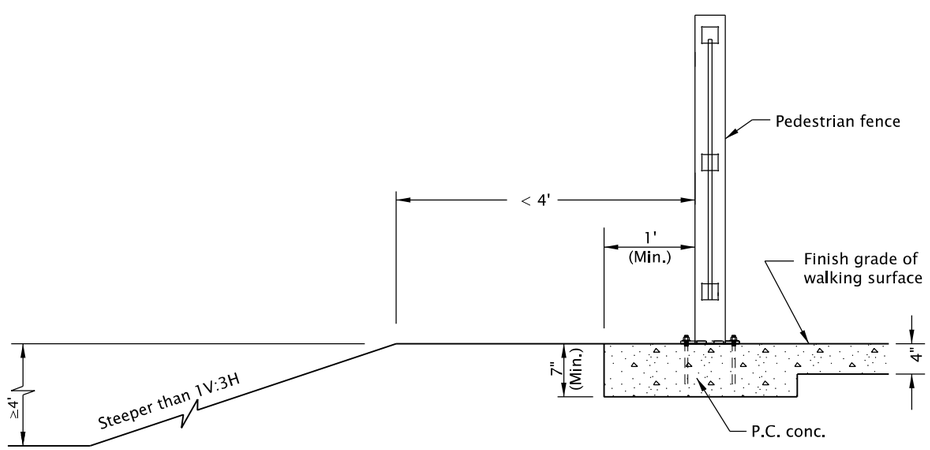

WHEN PEDESTRIAN FENCE IS REQUIRED FOR WALKING SURFACES

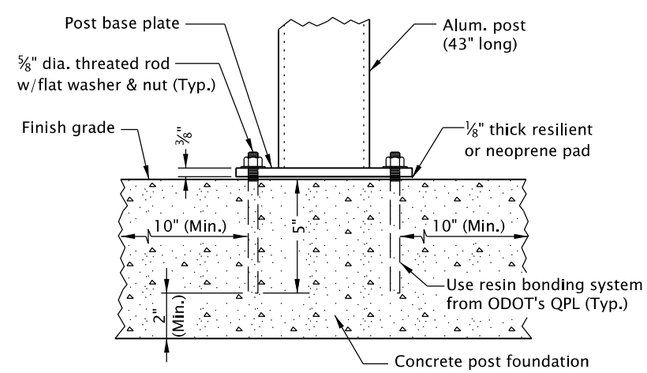

POST BASE PLATE BOLT DOWN ANCHOR

GENERAL NOTES FOR ALL DETAILS ON THIS SHEET:

1. See Std. Dwgs. RD781 & RD782 for details not shown.
2. Structure varies, see project plans.
3. All concrete shall be commercial grade concrete.
4. See project plans for details not shown.

CALC. BOOK NO. N/A

SDR DATE 20-JUL-2020

NOTE: All material and workmanship shall be in accordance with the current Oregon Standard Specifications

The selection and use of this Standard Drawing, while designed in accordance with generally accepted engineering principles and practices, is the sole responsibility of the user and should not be used without consulting a Registered Professional Engineer.

OREGON STANDARD DRAWINGS

ALUMINUM PEDESTRIAN FENCE (MASH, TL-2)

2021

DATE	REVISION DESCRIPTION
07-2020	DRAWING CREATED

rd780.dgn 20-JUL-2020

RD780

Effective Date: December 1, 2020 - May 31, 2021

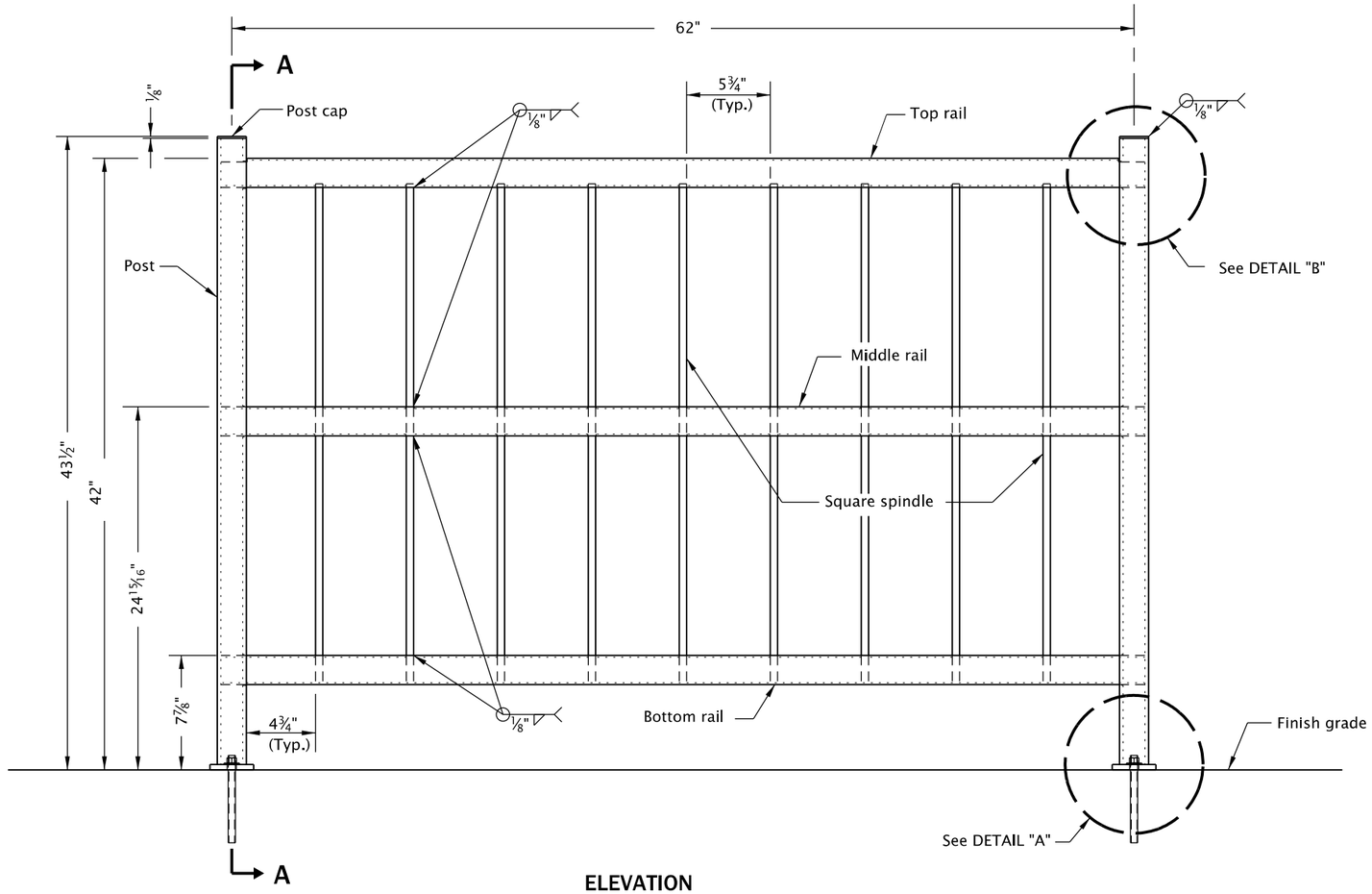

ELEVATION

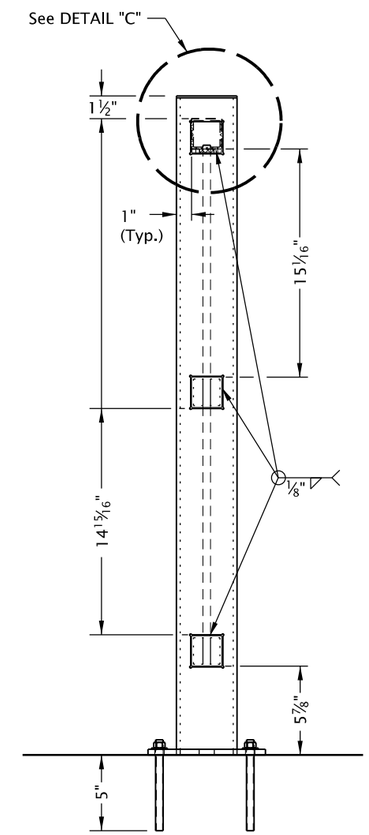

SECTION A-A

PEDESTRIAN FENCE UNIT DETAILS

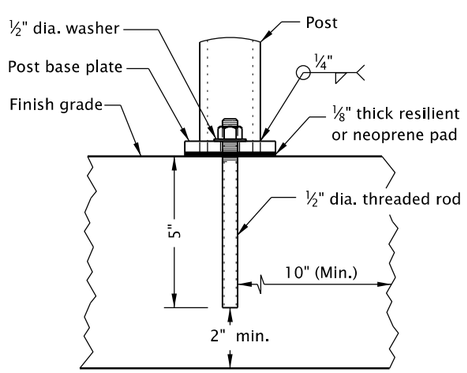

DETAIL "A"

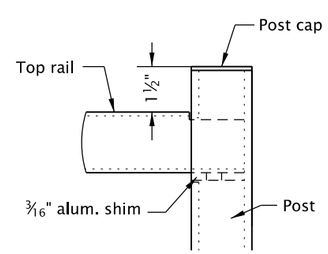

DETAIL "B"

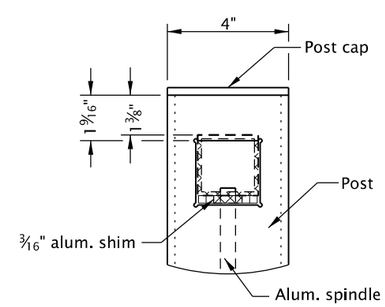

DETAIL "C"

GENERAL NOTES FOR ALL DETAILS ON THIS SHEET:

1. See Std. Dwgs. RD780 & RD782 for details not shown.
2. Structure varies, see project plans.
3. All concrete shall be commercial grade concrete.
4. See project plans for details not shown.

CALC. BOOK NO. N/A

SDR DATE 20-JUL-2020

NOTE: All material and workmanship shall be in accordance with the current Oregon Standard Specifications

The selection and use of this Standard Drawing, while designed in accordance with generally accepted engineering principles and practices, is the sole responsibility of the user and should not be used without consulting a Registered Professional Engineer.

OREGON STANDARD DRAWINGS

ALUMINUM PEDESTRIAN FENCE UNIT DETAILS

2021

DATE	REVISION DESCRIPTION
07-2020	DRAWING CREATED

rd781.dgn 20-JUL-2020

RD781

Effective Date: December 1, 2020 - May 31, 2021

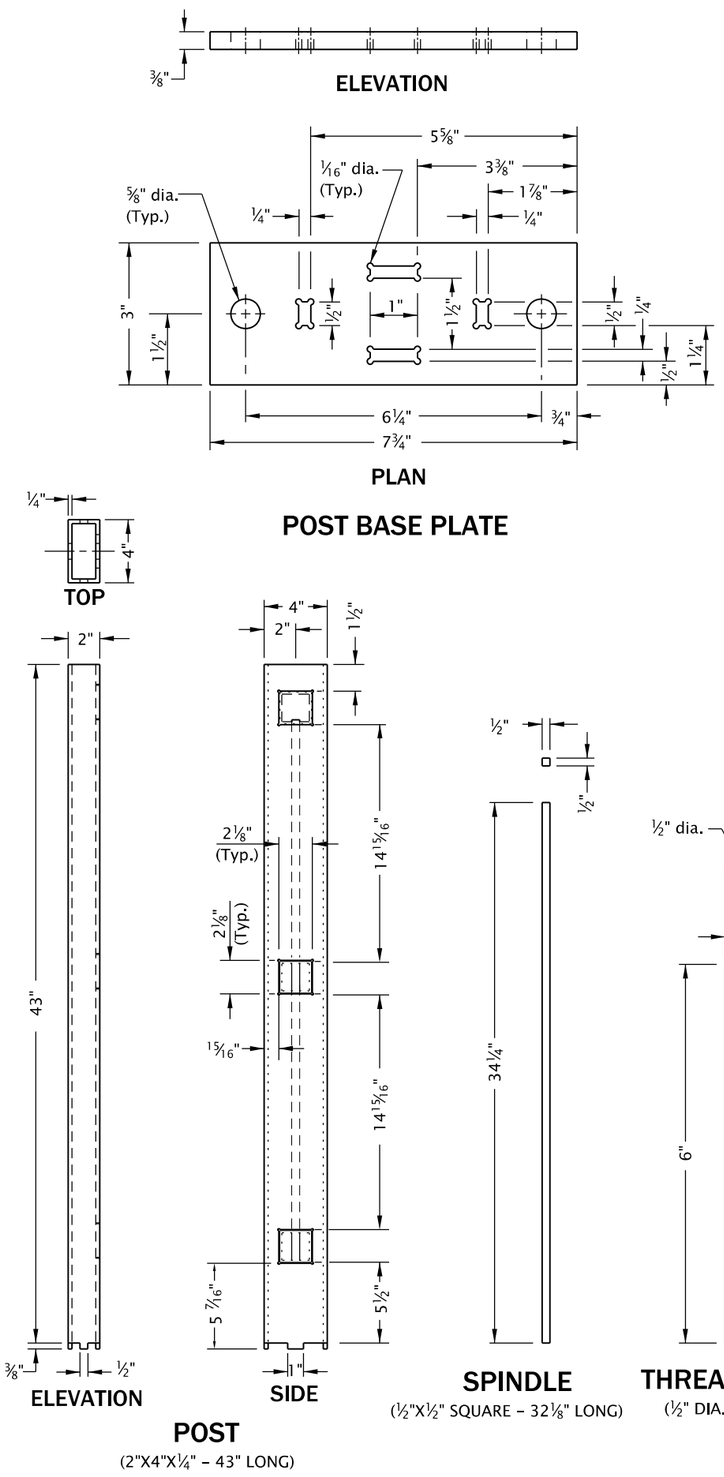

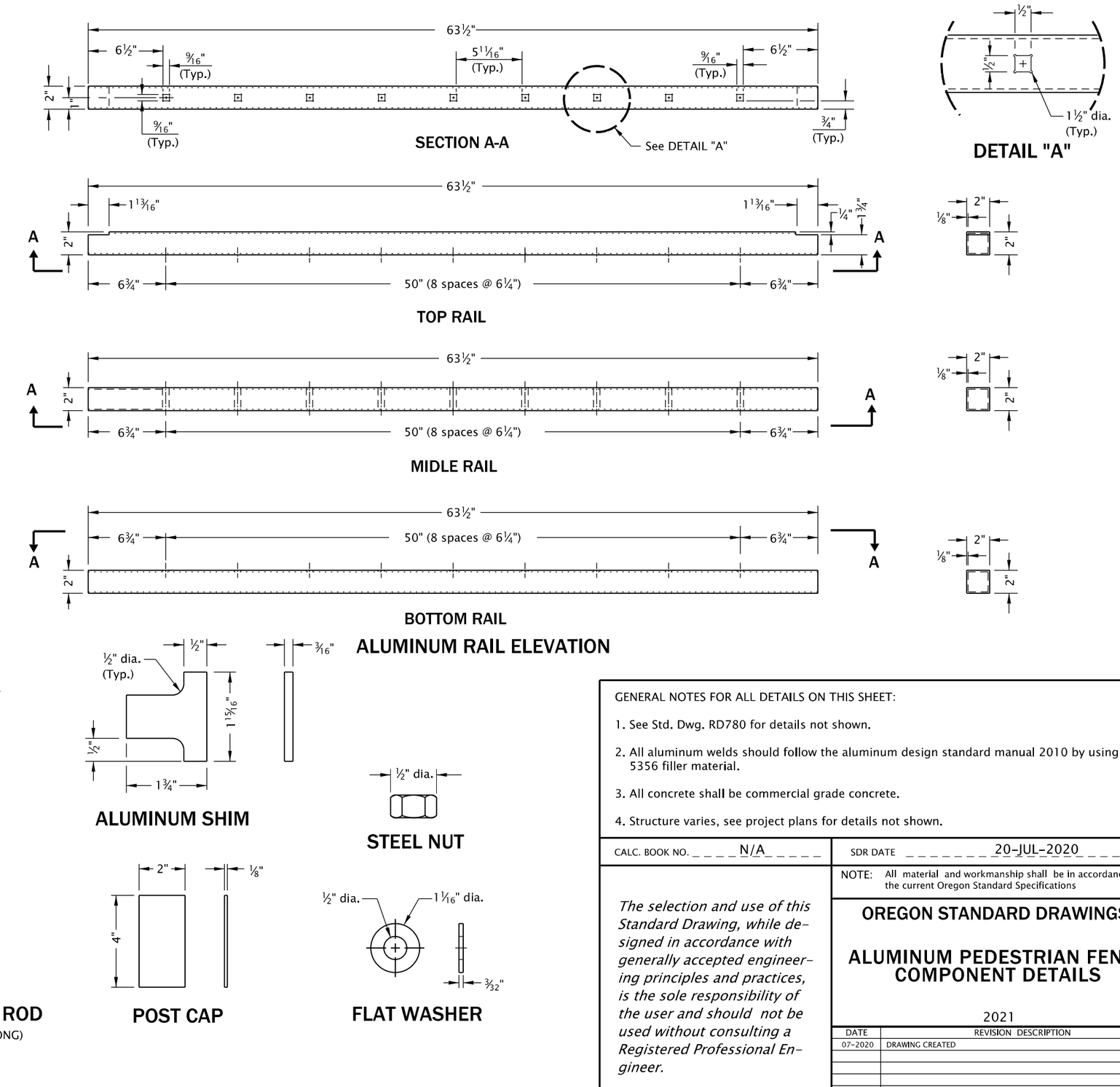

GENERAL NOTES FOR ALL DETAILS ON THIS SHEET:

1. See Std. Dwg. RD780 for details not shown.
2. All aluminum welds should follow the aluminum design standard manual 2010 by using 5356 filler material.
3. All concrete shall be commercial grade concrete.
4. Structure varies, see project plans for details not shown.

CALC. BOOK NO. N/A

SDR DATE 20-JUL-2020

NOTE: All material and workmanship shall be in accordance with the current Oregon Standard Specifications

The selection and use of this Standard Drawing, while designed in accordance with generally accepted engineering principles and practices, is the sole responsibility of the user and should not be used without consulting a Registered Professional Engineer.

OREGON STANDARD DRAWINGS

ALUMINUM PEDESTRIAN FENCE COMPONENT DETAILS

2021

DATE	REVISION DESCRIPTION
07-2020	DRAWING CREATED

rd782.dgn 20-JUL-2020

RD782

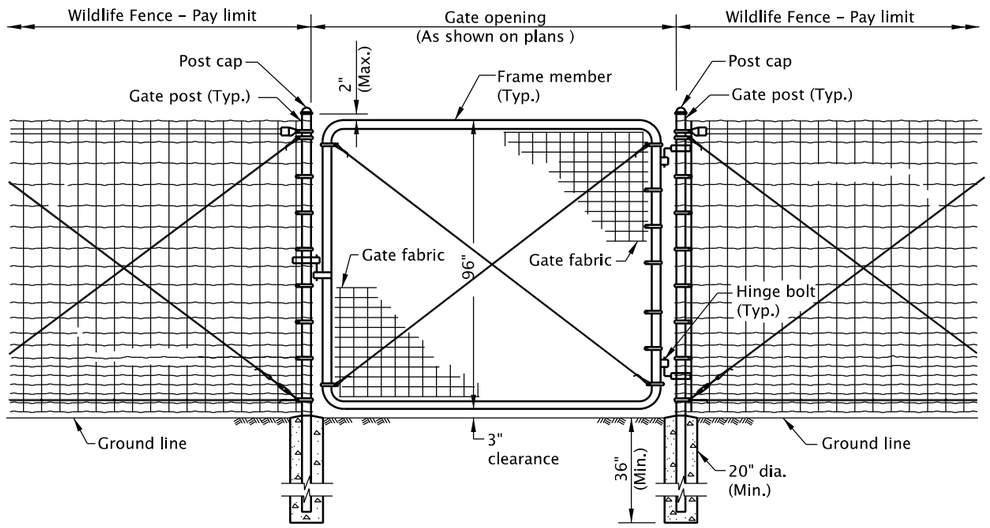

ACCESS GATE

(STEEL POSTS SHOWN)

GENERAL NOTES FOR ALL DETAILS ON THIS SHEET:

1. Gate shown is for use with Wildlife Fence
2. Gate posts on each side of a gate opening to be the same size.
   At a double gate installation with unequal width gates, size of both posts to be as indicated for single gate installation of the wider gate width.
3. See Std. Dwg. RD840 for details not shown.
   See Std. Dwg. RD845 for escape ramps and jump outs installation.
   See project plans for details not shown.
4. Add fence grounding as required.

CALC. BOOK NO. N/A

SDR DATE 20-JUL-2020

NOTE: All material and workmanship shall be in accordance with the current Oregon Standard Specifications

The selection and use of this Standard Drawing, while designed in accordance with generally accepted engineering principles and practices, is the sole responsibility of the user and should not be used without consulting a Registered Professional Engineer.

OREGON STANDARD DRAWINGS

WILDLIFE FENCE ACCESS GATE

2021

DATE	REVISION DESCRIPTION
07-2020	DRAWING CREATED

rd832.dgn 20-JUL-2020

RD832

CURB RAMP INDEX

STD. DWG. NO.	STD. DWG. TITLE
RD900	Curb Ramp Components And Legend
RD901	Curb Ramp Legend And Corner Identification
RD902	Detectable Warning Surface Details
RD904	Detectable Warning Surface Placement For Curb Ramps
RD905	Detectable Warning Surface Placement For Directional Curbs
RD906	Detectable Warning Surface Placement For Accessible Route Island
RD908	Detectable Warning Surface Placement
RD910, RD912	Perpendicular Curb Ramp
RD913	Perpendicular Curb Ramp With Closure
RD916	Perpendicular Curb Ramp Single Ramp
RD920	Parallel Curb Ramp
RD922	Parallel Curb Ramp Single Ramp
RD930, RD932	Combination Curb Ramp
RD938	Combination Curb Ramp Single Ramp
RD940	Blended Transition Curb Ramp Single Ramp
RD950 & RD952	End Of Walk Curb Ramp
RD960	Unique Curb Ramp

LEGEND:

- Marked or intended crossing traversable location
- Sidewalk or other traversable surface
- Detectable warning surface (DWS)
- Level area (Turning space/landing)
- Cross slope 1.5% max. (Max. 2.0% finished surface slope) (Normal sidewalk cross slope)
- Running slope. (Max. 4.9% finished surface slope)
- Running slope 7.5% max. (Max. 8.3% finished surface slope)
- Counter slope 4.0% max. ascending or descending (Max. 5.0% finished surface slope) Slope as required for drainage
- Flare slope (Max. 10.0% finished surface slope)
- 4'x4' clear space
- RR1 Ramp Run Position 1

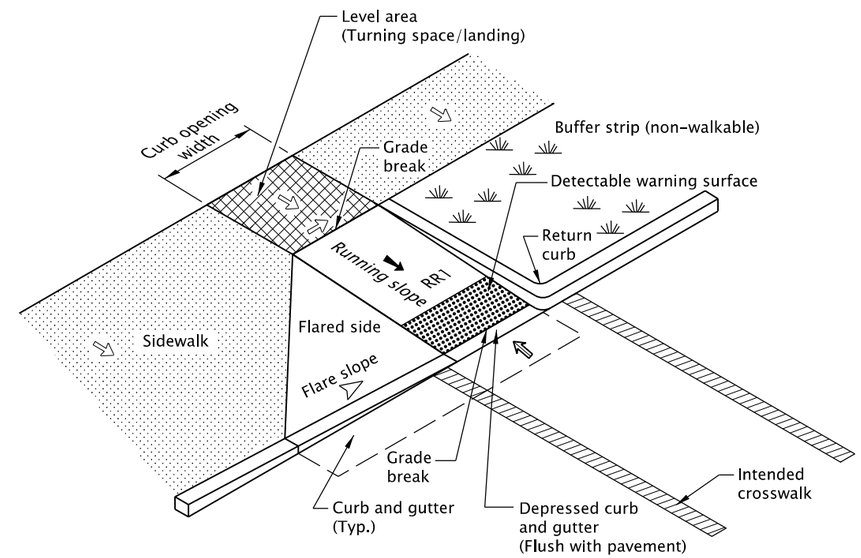

TYPICAL CURB RAMP SYSTEM COMPONENTS

(PERPENDICULAR TYPE SHOWN)

CALC. BOOK NO. N/A

SDR DATE 20-JULY-2020

NOTE: All material and workmanship shall be in accordance with the current Oregon Standard Specifications

The selection and use of this Standard Drawing, while designed in accordance with generally accepted engineering principles and practices, is the sole responsibility of the user and should not be used without consulting a Registered Professional Engineer.

OREGON STANDARD DRAWINGS

CURB RAMP COMPONENTS AND LEGEND

2021

DATE	REVISION DESCRIPTION
07-2020	DRAWING CREATED

rd900.dgn 20-JUL-2020

RD900

Effective Date: December 1, 2020 - May 31, 2021

Linear Referencing Method (LRM) Number
Use ODOT TransGIS, turn on layers Roadside > ADA corners and ADA Ramps
to see LRM and corner position number of curb ramps inventoried. Select "Identify Features" and click on Map Position to see Information.

This is a code to identify the intersection on a specific state highway.
There is a four part format for the code: Highway Number; Highway Suffix; Roadway ID, Mileage Type.

1) The Highway Number is a 3 digit number (not the route number) assigned to all state highways by ODOT.
   Valid numbers are 001-493.

2) Highway Suffix is a letter format assigned to frontage roads and connections to identify the unique connection, for example AA or AB.
   Use the Identify Features tool on the ODOT Trans GIS Road Network layer > Hwy Network-Colored layer for visual reference. Select "Identify Features" and click on Map Position to see Information.
   If the intersection is not located on a connection use 00 for the code.

3) Roadway ID is a one letter code used to identify alignment. There are two possible letter codes; "I" for increasing mile point direction and "D" for decreasing mile point direction.
   For most highways, the "I" direction is south and east. Note I-5 does not follow this rule. Generally "I" will be used.
   When there is a separated highway there will be an "I" roadway and a "D" roadway.
   Check the Digital Video Log to be sure of the direction.

4) Mileage Type is used when there are multiple locations of the same mile point on a section of highway.
   Overlay lapping mileage is listed as "z" mileage.

Example

228	00	I	00
Hwy No.	Suffix	ID	Type

Milepoint of an intersection is based on the mile point of the center of the intersection listed to the hundredth of a mile.

Corner Position is based on traveling in the increasing mile point direction, beginning with the first corner on the right and proceeding counter-clockwise around the intersection, numbering consecutive 1 through the end of corners. An "A" is added to the number for an island. For example an island between corner positions 1 and 2 and is closer to corner 2 has a corner position number of 2A (See corner position and curb ramp position diagram).

Curb Ramp Position is a number given to each curb ramp beginning with Corner Position 1. The first curb ramp encountered in the increasing mile point direction is number ramp 1. Then proceeds counter-clockwise around the corner, numbering in consecutive order.
Proceed following the pedestrian route and in Corner Position Number order (see corner position and curb ramp position diagram).

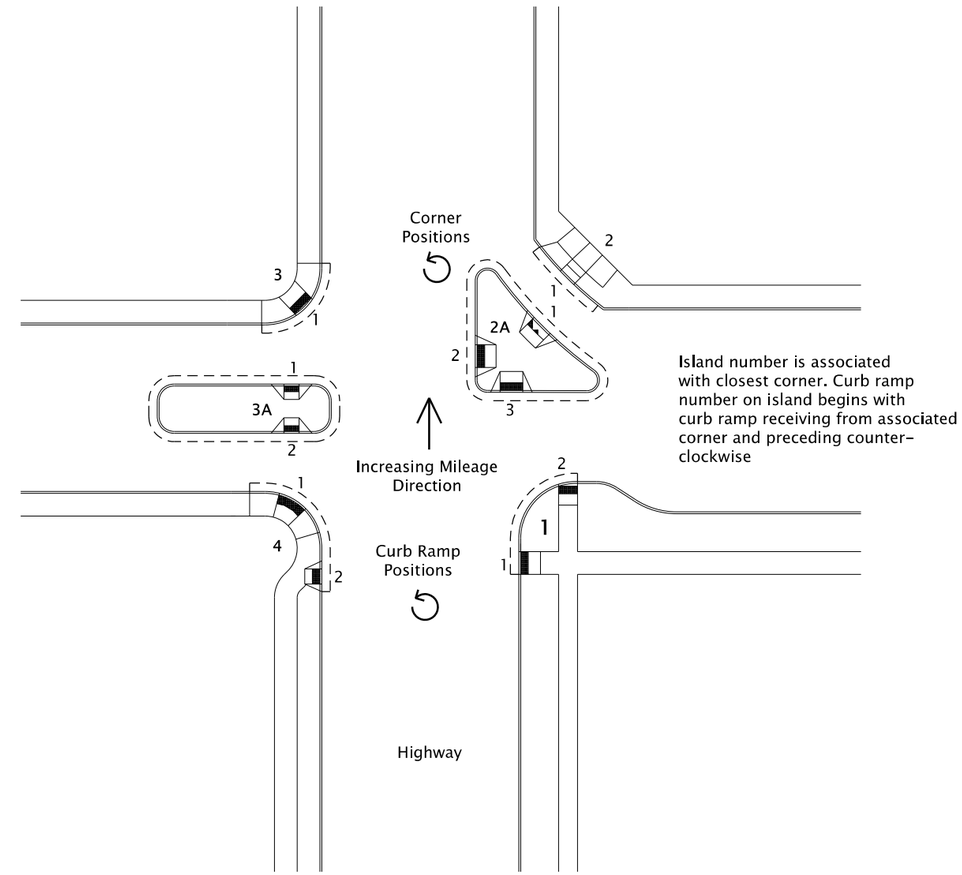

CORNER POSITION AND CURB RAMP POSITION DIAGRAM

(See ODOT Exhibit A for additional ramp and ramp run numbering conventions.)

STANDARD ABBREVIATION FOR CURB RAMP DETAILS

FG = Finish Grade (Elevation ft.) i.e. FG XXX.XX'
TFC = Top Face of Curb (Elevation ft.)
TBC = Top Back of Curb (Elevation ft.)
BFC = Bottom Face of Curb (Elevation ft.)
gtr. = Gutter (Elevation ft.)
GS = Gutter Slope (%), i.e. X.X%
E = Curb Exposure (Inch), i.e. X"
CS = Counter Slope on gutter pan (%)
RRN = Ramp Run Number, i.e. RRX
cl.sp. = Clear Space
TS = Turning Space
XS = Cross Slope
LA = Level Area
DWS = Detectable Warning Surface
PAR = Pedestrian Access Route

LEGEND:

- Fire Hydrant
- Gas Valves Box
- Inlet
- Sanitary Manhole
- Storm Manhole
- Pole Anchor
- Pole Base
- Pedestrian Pedestal
- Pedestrian Pushbutton
- Sign on a Post
- Traffic Signal Junction Box
- Utility Pole
- Utility Vault
- Water Meter
- Water Valve
- Cross Walk Barricade

CALC. BOOK NO. N/A

SDR DATE 20-JULY-2020

NOTE: All material and workmanship shall be in accordance with the current Oregon Standard Specifications

The selection and use of this Standard Drawing, while designed in accordance with generally accepted engineering principles and practices, is the sole responsibility of the user and should not be used without consulting a Registered Professional Engineer.

OREGON STANDARD DRAWINGS

CURB RAMP LEGEND AND CORNER IDENTIFICATION

2021

DATE	REVISION DESCRIPTION
07-2020	DRAWING CREATED

Effective Date: December 1, 2020 - May 31, 2021

rd901.dgn 20-JUL-2020

RD901

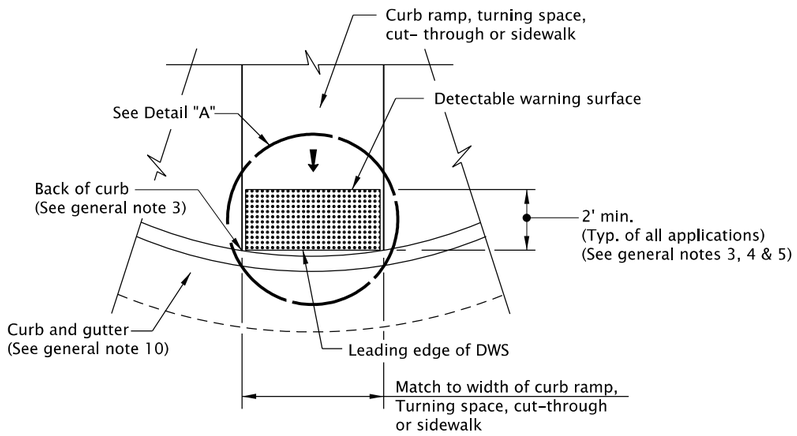

DETECTABLE WARNING SURFACE DETAIL

	A	B	C	D	E
MIN.	1.60"	0.65"	0.45"	0.90"	0.20"
MAX.	2.40"	--	0.91"	1.40"	0.20"

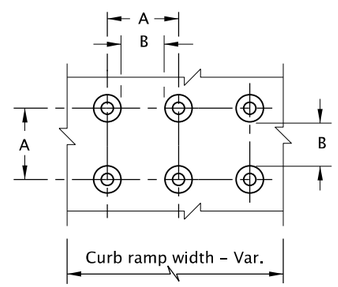

TRUCTATED DOME SPACING

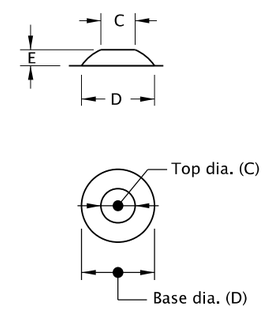

TRUNCATED DOME

TRUNCATED DOME DETAILS

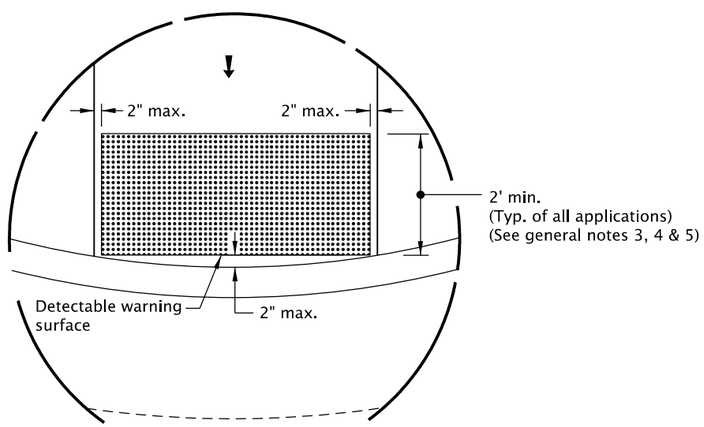

DETAIL "A"

GENERAL NOTES FOR ALL DETAILS ON THIS SHEET:

1. Detectable warning surface details & locations are based on applicable ODOT Standards.
2. See project plans for details not shown.
   See Std. Dwgs. RD700 & RD701 for curbs.
3. The detectable warning surface shall extend the full width of the curb ramp opening, shared use path, blended transition, turning space, or other roadway entrance as applicable. A gap of up to 2 inches on each side of the detectable warning surface is permitted (measured at the leading edge of the detectable warning surface panel).
4. Detectable warning surface shall be placed at the back of curb for a minimum depth of 2 ft. in the direction of pedestrian travel at curb ramps that are adjacent to traffic. Detectable warning surface may be radial or rectangular, but must comply with the truncated dome size and spacing standards. Detectable warning surface may be cut to meet necessary shape as shown in plans. Detectable warning surface across a grade break is prohibited.
5. Color to be safety yellow if no color specified in construction note. Alternative colors require a design exception on or along state highways.
6. Detectable warning surface shall be used in the following locations:
   a) Curb ramps at street crossings.
   b) Crossing islands (Accessible Route Islands).
   c) Rail crossings.
7. Where public transportation stations (rail, bus, etc.) use platform boarding, detectable warning surface shall be placed along the full edge length of the station, when not protected by platform screens or guards, (see Std. Dwg. RD908).
8. Detectable warning surface shall not be used on the following locations:
   a) End of sidewalk transitions that are not at a crosswalk, (see Std. Dwgs. RD950, RD952 & RD960).
   b) Driveways, unless constructed with curb return or are signalized.
   c) Parking lots, access aisles and passenger loading zones where curb ramp does not lead to vehicular way.
9. Where no curb is present, the detectable warning surface shall be placed at the edge of the roadway.
10. On or along state highways, curb and gutter is required at curb ramps.

LEGEND:

Detectable warning surface

Cross slope 1.5% max.
(Max. 2.0% finished surface slope)
(Normal sidewalk cross slope)

Running slope 7.5% max.
(Max. 8.3% finished surface slope)

CALC. BOOK NO. N/A

SDR DATE 20-JULY-2020

NOTE: All material and workmanship shall be in accordance with the current Oregon Standard Specifications

The selection and use of this Standard Drawing, while designed in accordance with generally accepted engineering principles and practices, is the sole responsibility of the user and should not be used without consulting a Registered Professional Engineer.

OREGON STANDARD DRAWINGS

DETECTABLE WARNING SURFACE DETAILS

2021

DATE	REVISION DESCRIPTION
07-2020	DRAWING CREATED

rd902.dgn 20-JUL-2020

RD902

Effective Date: December 1, 2020 - May 31, 2021

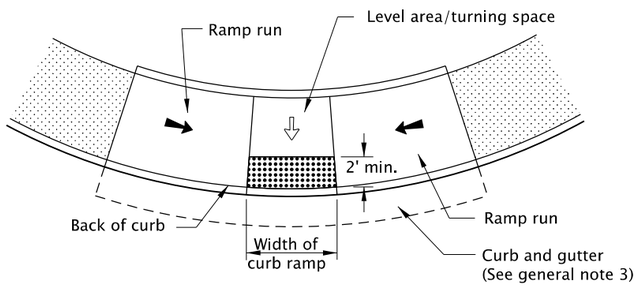

PARALLEL CURB RAMP

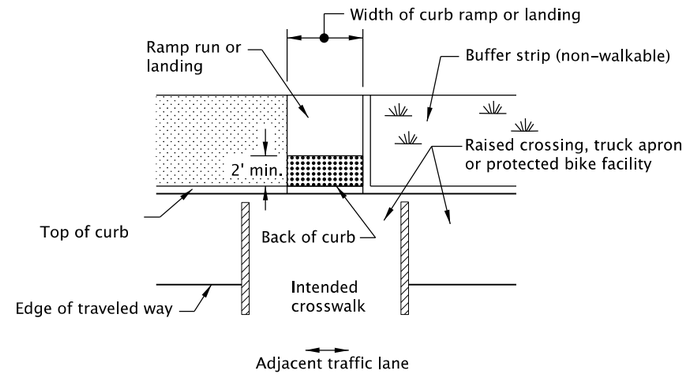

RAISED CROSSING, TRUCK APRON OR PROTECTED BIKE FACILITY

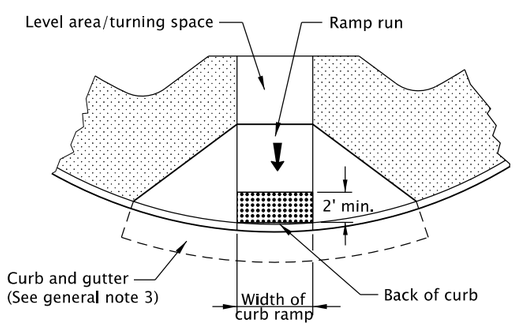

PERPENDICULAR CURB RAMP

GRADE BREAK IN FRONT OF CURB

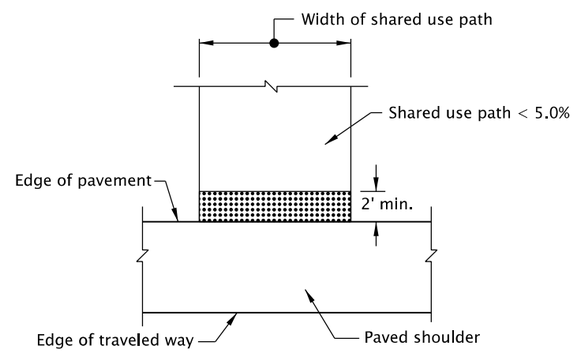

SHARED-USE PATH CONNECTION

GENERAL NOTES FOR ALL DETAILS ON THIS SHEET:

1. Detectable warning surface details & locations are based on applicable ODOT Standards.
2. See project plans for details not shown.
   See Std. Dwgs. RD700 & RD701 for curbs.
   See Std. Dwg. RD902 for detectable warning surface installation details.
3. On or along state highways, curb and gutter is required at curb ramps.
4. Detectable warning surface placement for perpendicular ramps vary as shown.

LEGEND:

- Marked or intended crossing location
- Sidewalk
- Detectable warning surface
- Cross slope 1.5% max. (Max. 2.0% finished surface slope) (Normal sidewalk cross slope)
- Running slope 7.5% max. (Max. 8.3% finished surface slope)

CALC. BOOK NO. N/A

SDR DATE 20-JULY-2020

NOTE: All material and workmanship shall be in accordance with the current Oregon Standard Specifications

The selection and use of this Standard Drawing, while designed in accordance with generally accepted engineering principles and practices, is the sole responsibility of the user and should not be used without consulting a Registered Professional Engineer.

OREGON STANDARD DRAWINGS

DETECTABLE WARNING SURFACE PLACEMENT FOR CURB RAMPS

2021

DATE	REVISION DESCRIPTION
07-2020	DRAWING CREATED

rd904.dgn 20-JUL-2020

RD904

Effective Date: December 1, 2020 - May 31, 2021

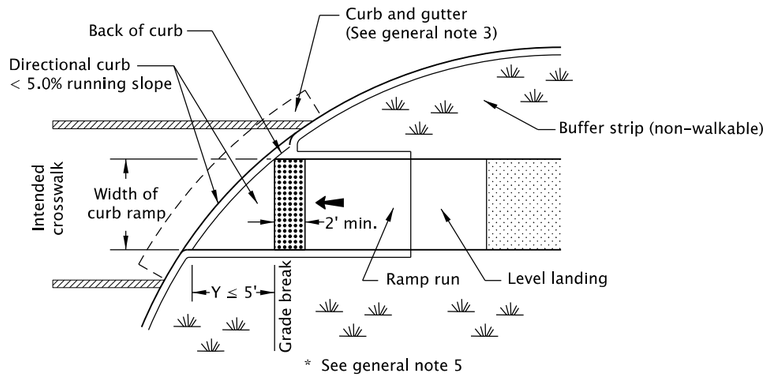

CURB RAMP CROSSING
GRADE BREAK ≤ 5 FT. FROM BACK OF CURB

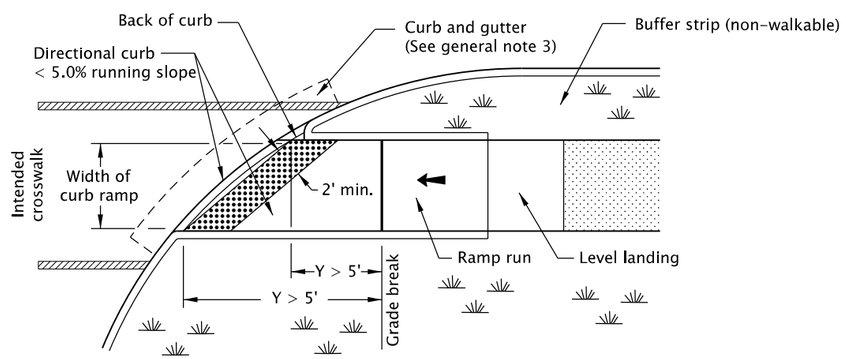

CURB RAMP CROSSING
GRADE BREAK > 5 FT. FROM BACK OF CURB

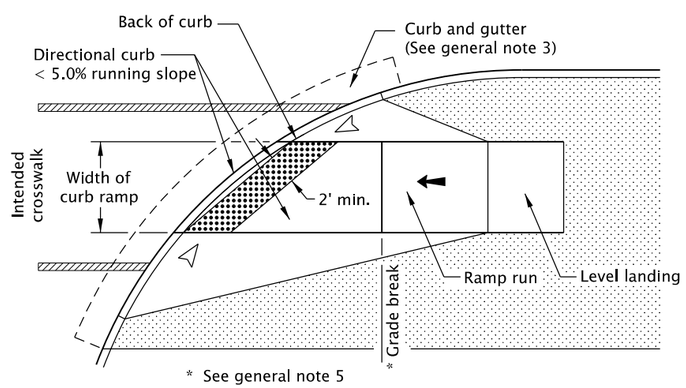

CURB RAMP CROSSING
DIRECTIONAL CURB WITH FLARED CONSTRUCTION

GENERAL NOTES FOR ALL DETAILS ON THIS SHEET:

1. Detectable warning surface details & locations are based on applicable ODOT Standards.
2. See project plans for details not shown.
   See Std. Dwgs. RD700 & RD701 for curbs.
   See Std. Dwg. RD902 for detectable warning surface installation details.
3. On or along state highways, curb and gutter is required at curb ramps.
4. Detectable warning surface placement for perpendicular ramps vary as shown.
5. Detectable warning surface placement across the grade break is prohibited.

LEGEND:

- Marked or intended crossing location
- Sidewalk
- Detectable warning surface
- Running slope 7.5% max. (Max. 8.3% finished surface slope)
- Flare slope (Max. 10.0% finished surface slope)

CALC. BOOK NO. N/A

SDR DATE 20-JULY-2020

NOTE: All material and workmanship shall be in accordance with the current Oregon Standard Specifications

The selection and use of this Standard Drawing, while designed in accordance with generally accepted engineering principles and practices, is the sole responsibility of the user and should not be used without consulting a Registered Professional Engineer.

OREGON STANDARD DRAWINGS

DETECTABLE WARNING SURFACE PLACEMENT FOR DIRECTIONAL CURBS

2021

DATE	REVISION DESCRIPTION
07-2020	DRAWING CREATED

rd905.dgn 20-JUL-2020

RD905

Effective Date: December 1, 2020 - May 31, 2021

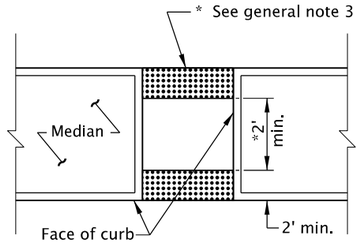

* Omit detectable warning surfaces if less than 2'

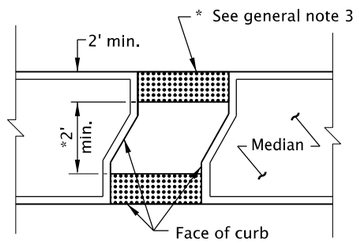

CUT-THROUGH
(Asph. conc. surface shown)

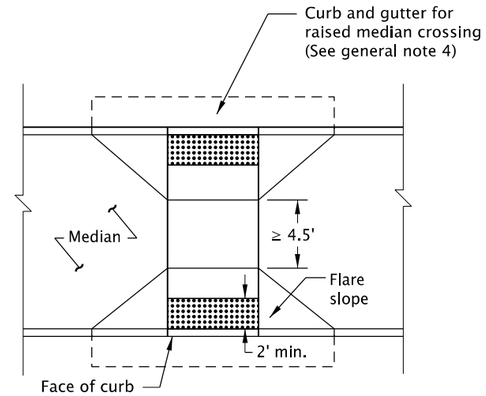

RAISED MEDIAN
(P.C. conc. surface shown)

MEDIAN CROSSING

* Omit detectable warning surfaces if less than 2'

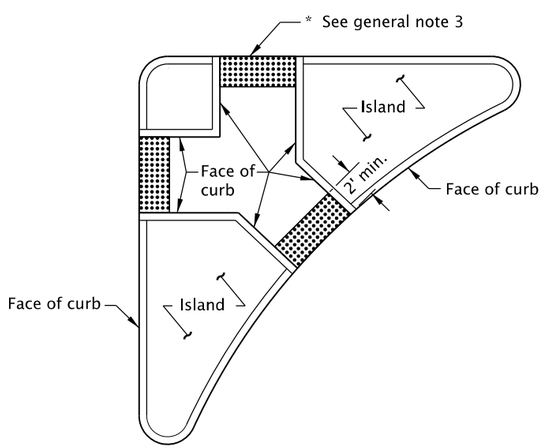

CUT-THROUGH ISLAND
(Asph. conc. surface shown)

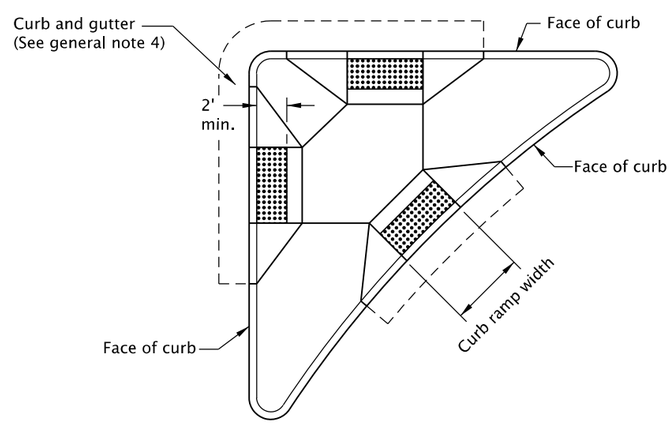

RAISED ISLAND
(P.C. conc. surface shown)

RIGHT TURN CHANNELIZATION ISLAND

GENERAL NOTES FOR ALL DETAILS ON THIS SHEET:

1. Detectable warning surface details & locations are based on applicable ODOT Standards.
2. See project plans for details not shown.
   See Std. Dwgs. RD700 & RD701 for curbs.
   See Std. Dwgs. RD710 & RD711 for accessible route island.
   See Std. Dwg. RD902 for detectable warning surface installation details.
3. Detectable warning surfaces shall be separated by a 2.0 ft minimum length of walkway without detectable warnings. Where the island has no curb, the detectable warning surface shall be placed at the edge of roadway.
4. On or along state highways, curb and gutter is required at curb ramps.
5. Details intended for pedestrian route only. For protected bike lanes on multi-use paths, see project plans for specific details.

LEGEND:

Detectable warning surface

CALC. BOOK NO. N/A

SDR DATE 20-JULY-2020

NOTE: All material and workmanship shall be in accordance with the current Oregon Standard Specifications

The selection and use of this Standard Drawing, while designed in accordance with generally accepted engineering principles and practices, is the sole responsibility of the user and should not be used without consulting a Registered Professional Engineer.

OREGON STANDARD DRAWINGS

DETECTABLE WARNING SURFACE PLACEMENT FOR ACCESSIBLE ROUTE ISLAND

2021

DATE	REVISION DESCRIPTION
07-2020	DRAWING CREATED

rd906.dgn 20-JUL-2020

RD906

Effective Date: December 1, 2020 - May 31, 2021

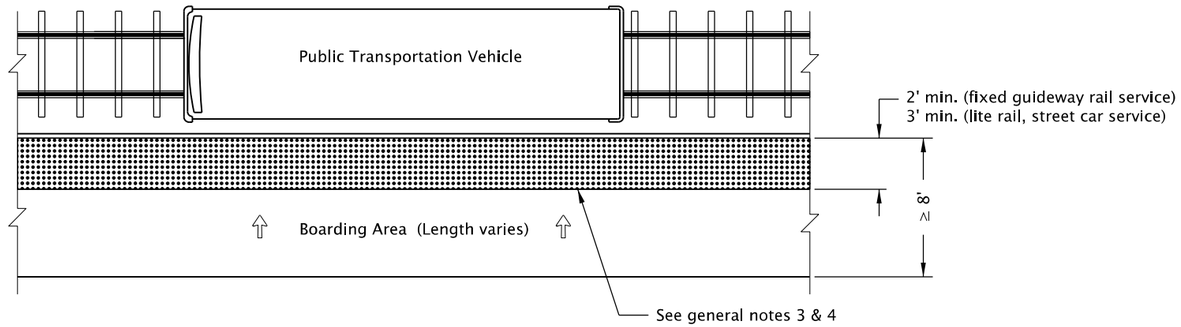

PUBLIC TRANSPORTATION STATION

Rail or Transit Service

NOTES:

a. Detectable warning surfaces shall be outside of crossing arms where they exist.

b. Pedestrian rail crossings are generally perpendicular to the rail. Skew shown for minimum distance of detectable warning surface.

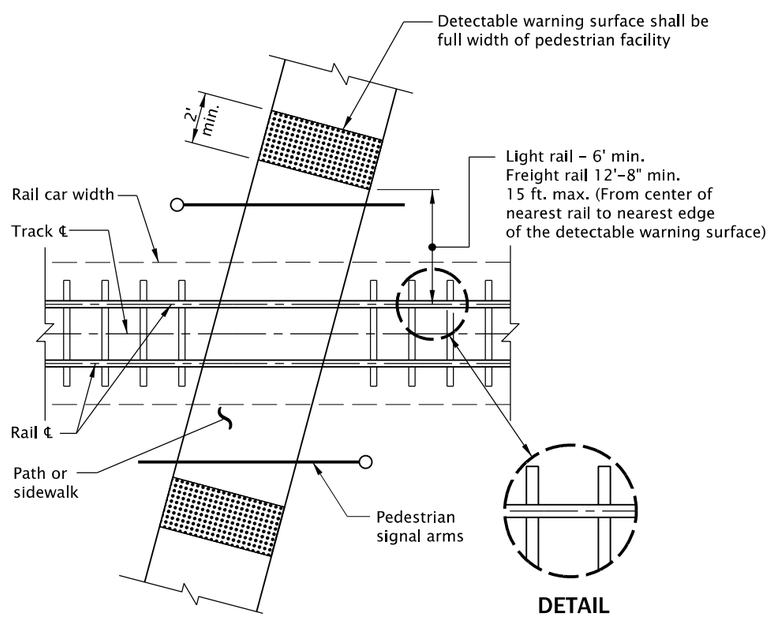

AT-GRADE RAIL CROSSING

GENERAL NOTES FOR ALL DETAILS ON THIS SHEET:

1. Detectable warning surface details & locations are based on applicable ODOT Standards.
2. See project plans for details not shown.
   See Std. Dwg. RD902 for detectable warning surface installation details.
3. Place detectable warning surface along the full length of the rail station, when not protected by screens or guards on raised platforms, sidewalk, and street level boarding areas.
4. Place detectable warning surface along the full length of the transit station, when not protected by screens or guards on raised platforms and sidewalk boarding areas.

LEGEND:

Detectable warning surface

Cross slope 1.5% max.
(Max. 2.0% finished surface slope)

CALC. BOOK NO. N/A

SDR DATE 20-JULY-2020

NOTE: All material and workmanship shall be in accordance with the current Oregon Standard Specifications

The selection and use of this Standard Drawing, while designed in accordance with generally accepted engineering principles and practices, is the sole responsibility of the user and should not be used without consulting a Registered Professional Engineer.

OREGON STANDARD DRAWINGS

DETECTABLE WARNING SURFACE PLACEMENT

2021

DATE	REVISION DESCRIPTION
07-2020	DRAWING CREATED

rd908.dgn 20-JUL-2020

RD908

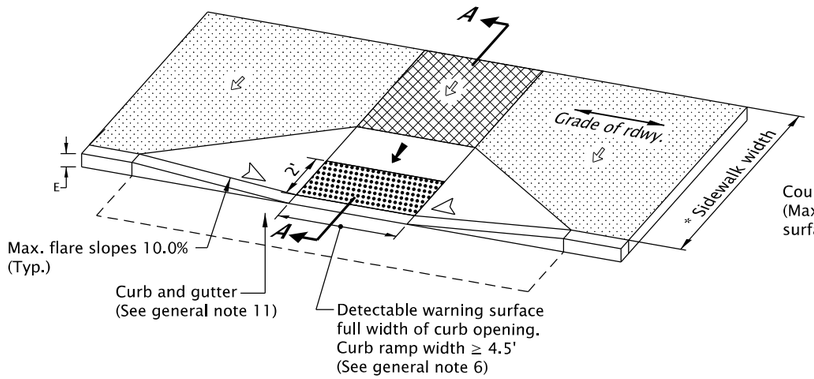

PERPENDICULAR CURB RAMP DETAIL

(Use "Parallel Curb Ramp Detail" or "Combination Curb Ramp Detail" when reqd. turning space cannot be obtained)

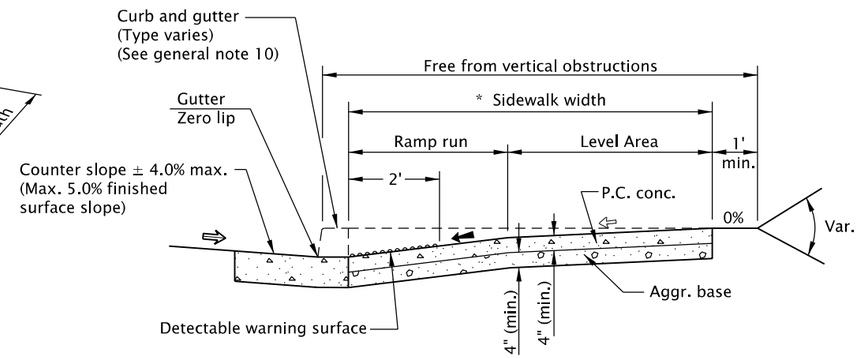

SECTION A-A

* NOTE: Minimum width of 14.25 feet sidewalk for E=7"

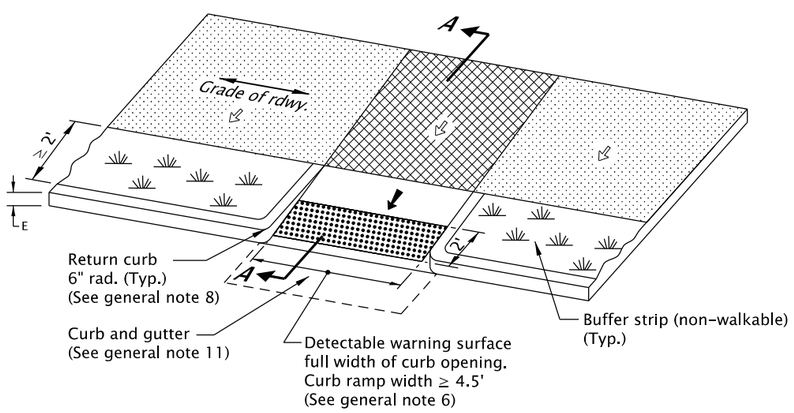

THROUGH BUFFER STRIP

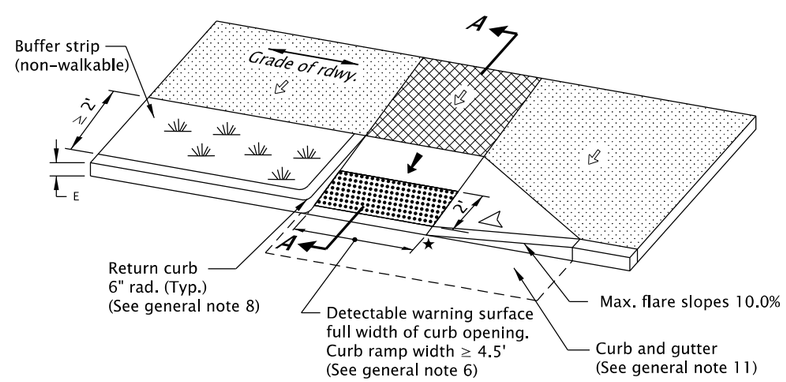

WITH SINGLE FLARE

GENERAL NOTES FOR ALL DETAILS ON THIS SHEET:

1. Curb ramp details are based on applicable ODOT Standards.
2. See Std. Dwgs. RD700 & RD701 for curbs.
   See Std. Dwgs. RD720 & RD721 for sidewalks.
   See Std. Dwgs. RD902 through RD908 for detectable warning surface installation details.
   See Std. Dwgs. RD912 through RD916 for curb ramp placement options.
3. Site conditions normally require a project specific design. See project plans for details not shown.
4. Tooled dummy joints are required at all curb ramp grade break lines, (see Std. Dwg. RD722).
5. Curb ramp slopes shown are relative to the true level horizon (zero bubble).
6. Place detectable warning surface at the back of curb for a minimum depth of 2' in the direction of pedestrian travel full width of curb ramp opening that is adjacent to traffic.
7. Grade breaks at the top and bottom of curb ramp runs shall be perpendicular to the direction of the ramp run. Grade breaks shall not be permitted on the surface of ramp runs and turning spaces. Surface slopes that meet at grade breaks shall be flush.
8. Return curb may be provided in lieu of flared slope only if protected from traverse travel by landscaping, see Std. Dwg. RD721. Return curb shall not reduce width of approaching sidewalk.
9. Curb ramps for shared use paths intersecting a roadway shall be full width of path, excluding flares. When a curb ramp is used to provide bicycle access from a roadway to a sidewalk, the curb ramp opening will be ≥ 8' wide.
10. Place an inlet at upstream side of curb ramp or perform other approved design mitigation. Check the gutter flow depth at curb ramp locations to assure that the design flood does not overtop the back of sidewalk.
11. On or along state highways, curb and gutter is required at curb ramps.

LEGEND:

- Sidewalk
- Detectable warning surface
- Level area (Turning space/landing)
  Unobstructed 4.5' x 4.5'
  With obstruction 4.5' x 5.5' (Longer dimension in direction of pedestrian street crossing).
  For the purposes of this application, a max. 2.0% finished surface slope (for drainage) measured perpendicular in two directions is considered level.
- ⇦ Cross slope 1.5% max.
  (Max. 2.0% finished surface slope)
  (Normal sidewalk cross slope)
- ← Running slope 7.5% max.
  (Max. 8.3% finished surface slope)
- ⇦ Counter slope 4.0% max. ascending or descending,
  (Max. 5.0% finished surface slope)
  Slope as required for drainage
- ◁ Flare slope
  (Max. 10% finished surface slope)

CALC. BOOK NO. N/A

SDR DATE 20-JULY-2020

NOTE: All material and workmanship shall be in accordance with the current Oregon Standard Specifications

The selection and use of this Standard Drawing, while designed in accordance with generally accepted engineering principles and practices, is the sole responsibility of the user and should not be used without consulting a Registered Professional Engineer.

OREGON STANDARD DRAWINGS

PERPENDICULAR CURB RAMP

2021

DATE	REVISION DESCRIPTION
07-2020	DRAWING CREATED

rd910.dgn 20-JUL-2020

RD910

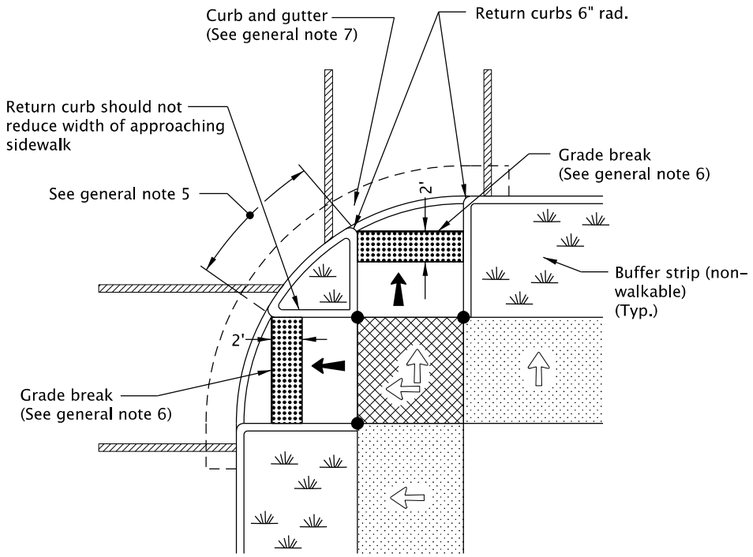

WITH LANDSCAPED BUFFER STRIP
OPTION "PR-1"

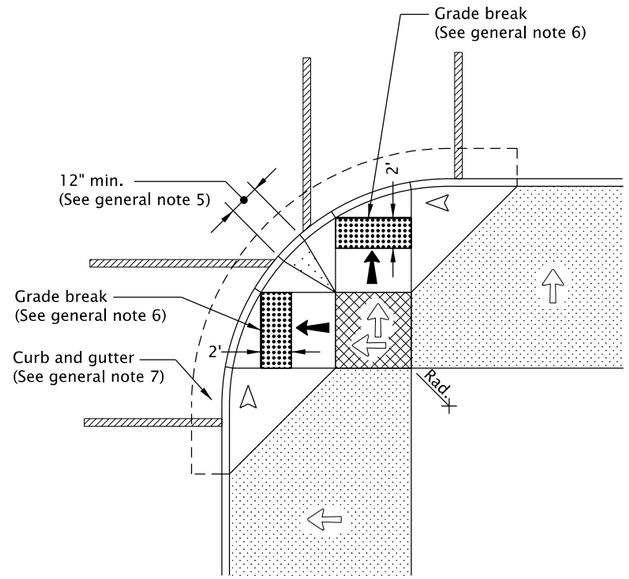

FOR WIDE SIDEWALKS
OPTION "PR-2"

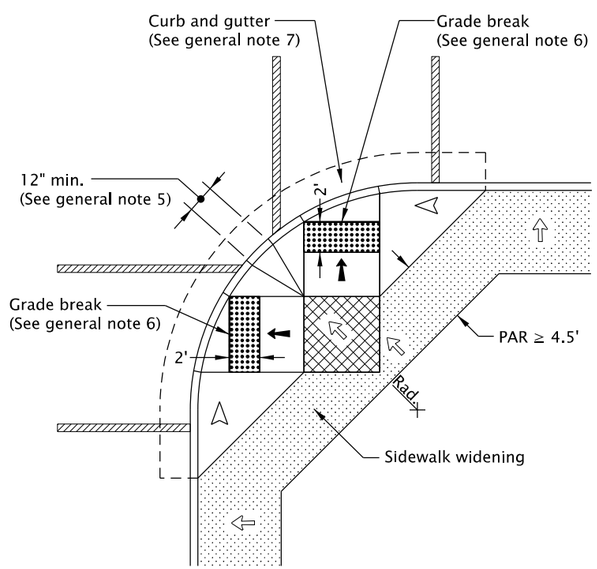

FOR NARROW SIDEWALKS
OPTION "PR-3"

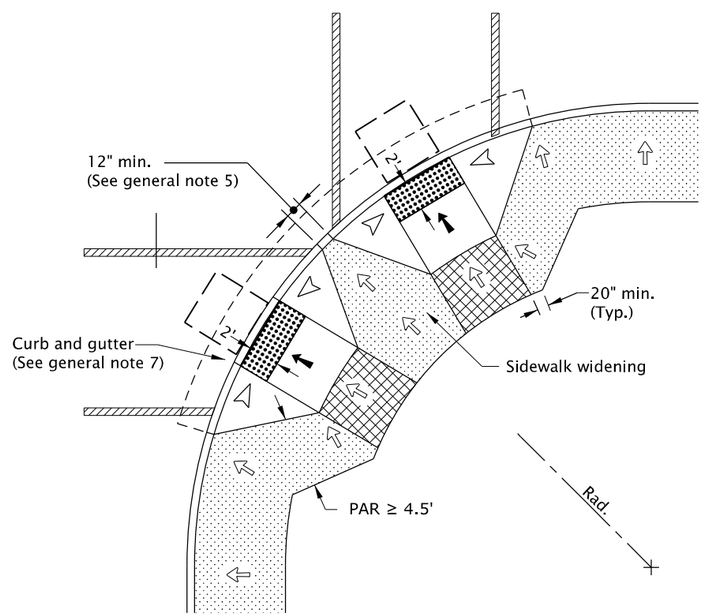

FOR NARROW SIDEWALKS
OPTION "PR-4"

GENERAL NOTES FOR ALL DETAILS ON THIS SHEET:

1. Curb ramp details are based on applicable ODOT Standards.
2. See project plans for details not shown.
   See Std. Dwgs. RD700 & RD701 for curbs.
   See Std. Dwgs. RD720 & RD721 for sidewalks.
   See Std. Dwg. RD910 for perpendicular curb ramp details.
   See Std. Dwgs. RD902 through RD908 for detectable warning surface installation details.
3. Tooled dummy joints are required at all curb ramp grade break lines, (see Std. Dwg. RD722).
4. Curb ramp slopes shown are relative to the true level horizon (zero bubble).
5. When 2 curb ramps are immediately adjacent, the curb exposure (E) between the adjacent side flares may range between 3" and full design exposure.
6. Grade breaks at the top and bottom of curb ramp runs shall be perpendicular to the direction of the ramp run. Grade breaks shall not be permitted on the surface of ramp runs and turning spaces. Surface slopes that meet at grade breaks shall be flush.
7. On or along state highways, curb and gutter is required at curb ramps.

LEGEND:

- Marked or intended crossing location
- Sidewalk
- Detectable warning surface
- Level area (Turning space/landing)
  Unobstructed 4.5' x 4.5'
  With obstruction 4.5' x 5.5' (Longer dimension in direction of pedestrian street crossing).
  For the purposes of this application, a max. 2.0% finished surface slope (for drainage) measured perpendicular in two directions is considered level.
- Cross slope 1.5% max.
  (Max. 2.0% finished surface slope)
  (Normal sidewalk cross slope)
- Running slope 7.5% max.
  (Max. 8.3% finished surface slope)
- Flare slope
  (Max. 10% finished surface slope)
- Zero curb exposure
- 4' x 4' clear space
- PAR Pedestrian Access Route

CALC. BOOK NO. N/A

SDR DATE 20-JULY-2020

NOTE: All material and workmanship shall be in accordance with the current Oregon Standard Specifications

The selection and use of this Standard Drawing, while designed in accordance with generally accepted engineering principles and practices, is the sole responsibility of the user and should not be used without consulting a Registered Professional Engineer.

OREGON STANDARD DRAWINGS

PERPENDICULAR CURB RAMP

2021

DATE	REVISION DESCRIPTION
07-2020	DRAWING CREATED

rd912.dgn 20-JUL-2020

RD912

Effective Date: December 1, 2020 - May 31, 2021

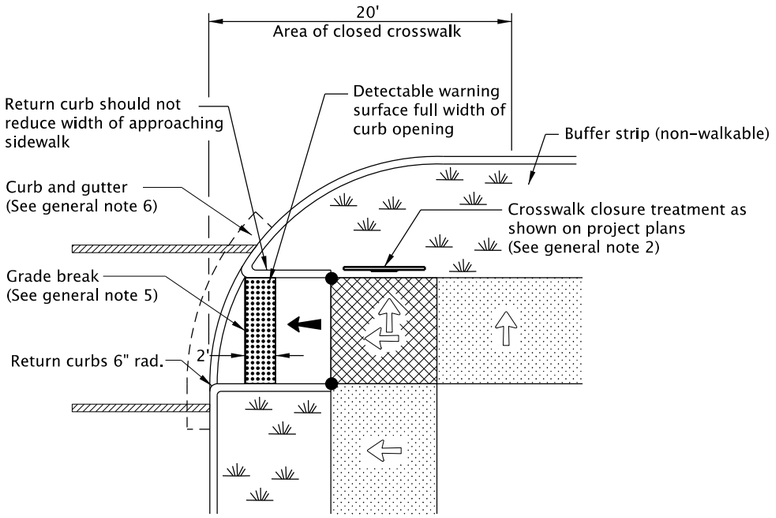

CROSSWALK CLOSURE WITH LANDSCAPE BUFFER STRIP OPTION "PR-5"

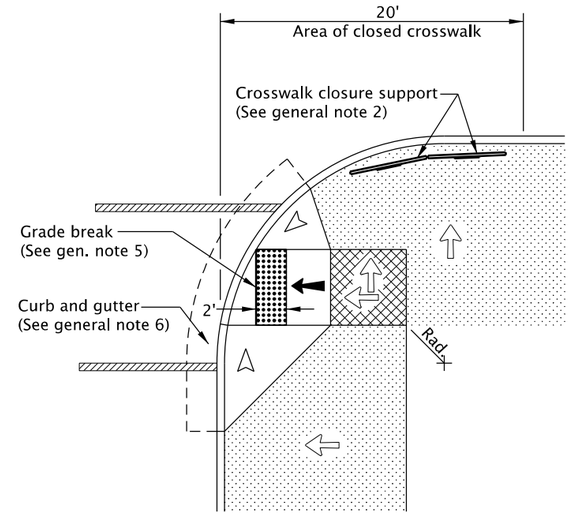

CROSSWALK CLOSURE FOR WIDE SIDEWALK OPTION "PR-6"

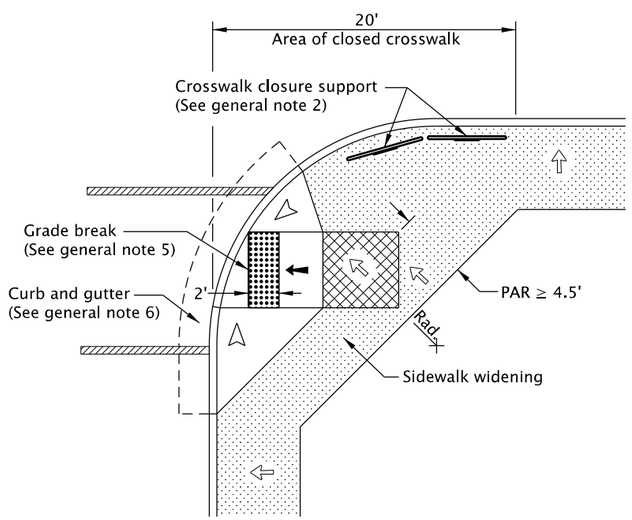

CROSSWALK CLOSURE FOR NARROW SIDEWALK OPTION "PR-7"

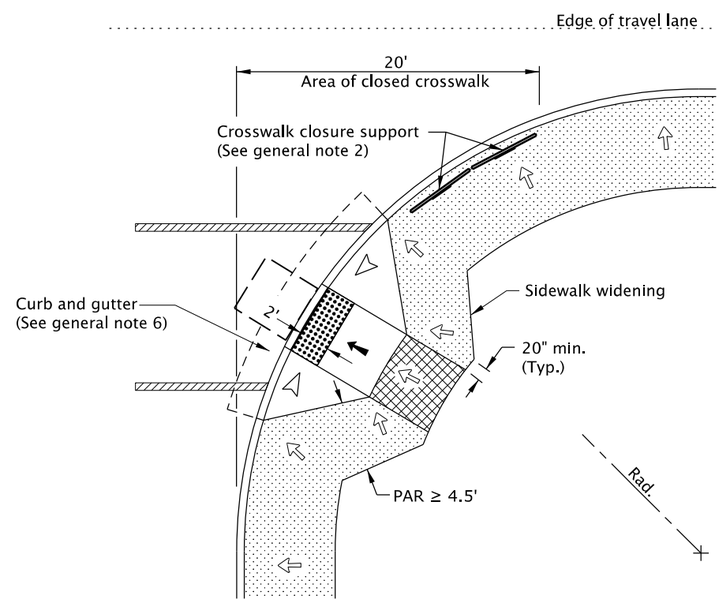

CROSSWALK CLOSURE OPTION "PR-8"

GENERAL NOTES FOR ALL DETAILS ON THIS SHEET:

1. Curb ramp details are based on applicable ODOT Standards.
2. See project plans for details not shown.
   See Std. Dwgs. RD700 & RD701 for curbs.
   See Std. Dwgs. RD720 & RD721 for sidewalks.
   See Std. Dwg. RD910 for perpendicular curb ramp details.
   See Std. Dwgs. RD902 through RD908 for detectable warning surface installation details.
   See Std. Dwg. TM240 for crosswalk closure detail.
3. Tooled dummy joints are required at all curb ramp grade break lines, (see Std. Dwg. RD722).
4. Curb ramp slopes shown are relative to the true level horizon (zero bubble).
5. Grade breaks at the top and bottom of curb ramp runs shall be perpendicular to the direction of the ramp run. Grade breaks shall not be permitted on the surface of ramp runs and turning spaces. Surface slopes that meet at grade breaks shall be flush.
6. On or along state highways, curb and gutter is required at curb ramps.

LEGEND:

- Marked or intended crossing location
- Sidewalk
- Detectable warning surface
- Level area (Turning space/landing)
  Unobstructed 4.5' x 4.5'
  With obstruction 4.5' x 5.5' (Longer dimension in direction of pedestrian street crossing).
  For the purposes of this application, a max. 2.0% finished surface slope (for drainage) measured perpendicular in two directions is considered level.
- Cross slope 1.5% max.
  (Max. 2.0% finished surface slope)
  (Normal sidewalk cross slope)
- Running slope 7.5% max.
  (Max. 8.3% finished surface slope)
- Flare slope
  (Max. 10% finished surface slope)
- Zero curb exposure
- 4' x 4' clear space
- PAR — Pedestrian Access Route

CALC. BOOK NO. N/A

SDR DATE 20-JULY-2020

NOTE: All material and workmanship shall be in accordance with the current Oregon Standard Specifications

The selection and use of this Standard Drawing, while designed in accordance with generally accepted engineering principles and practices, is the sole responsibility of the user and should not be used without consulting a Registered Professional Engineer.

OREGON STANDARD DRAWINGS

PERPENDICULAR CURB RAMP WITH CLOSURE

2021

DATE	REVISION DESCRIPTION
07-2020	DRAWING CREATED

rd913.dgn 20-JUL-2020

RD913

Effective Date: December 1, 2020 - May 31, 2021

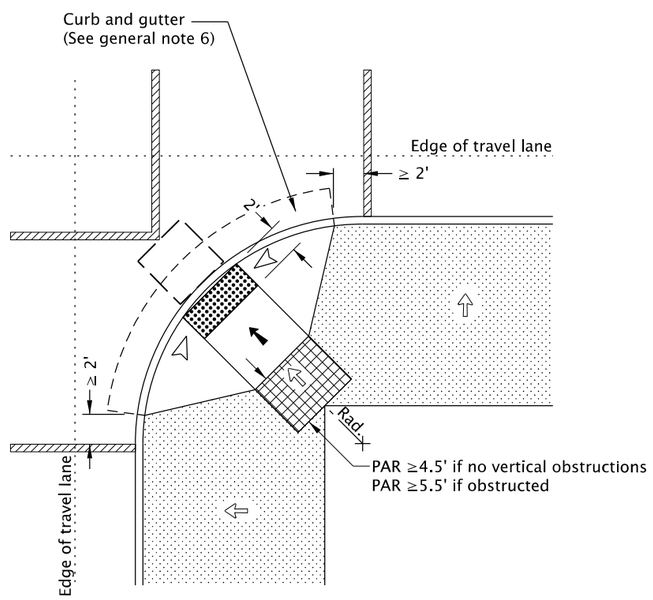

DIAGONAL CURB RAMP FOR WIDE SIDEWALKS
OPTION "PR-9"

(Use only when site constraints prohibit installing two curb ramps)

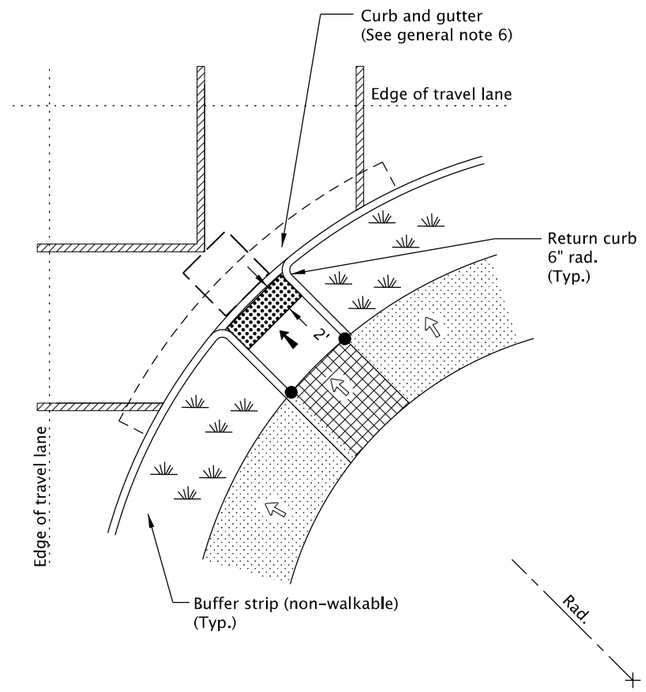

DIAGONAL CURB RAMP WITH LANDSCAPED BUFFER STRIP
OPTION "PR-10"

(Use only when site constraints prohibit installing two curb ramps)

GENERAL NOTES FOR ALL DETAILS ON THIS SHEET:

1. Curb ramp details are based on applicable ODOT Standards.

2. See project plans for details not shown.
   See Std. Dwgs. RD700 & RD701 for curbs.
   See Std. Dwgs. RD720 & RD721 for sidewalks.
   See Std. Dwg. RD910 for perpendicular curb ramp details.
   See Std. Dwgs. RD902 through RD908 for detectable warning surface installation details.

3. Tooled dummy joints are required at all curb ramp slope break lines, (see Std. Dwg. RD722).

4. Curb ramp slopes shown are relative to the true level horizon (zero bubble).

5. Only use curb ramp options allowed by jurisdiction. Single ramps required design exceptions on or along state highways.

6. On or along state highways, curb and gutter is required at curb ramps.

LEGEND:

- Marked or intended crossing location
- Sidewalk
- Detectable warning surface
- Level area (Turning space/landing)
  Unobstructed 4.5' x 4.5'
  With obstruction 4.5' x 5.5' (Longer dimension in direction of pedestrian street crossing).
  For the purposes of this application, a max. 2.0% finished surface slope (for drainage) measured perpendicular in two directions is considered level.
- Cross slope 1.5% max.
  (Max. 2.0% finished surface slope)
  (Normal sidewalk cross slope)
- Running slope 7.5% max.
  (Max. 8.3% finished surface slope)
- Flare slope
  (Max. 10% finished surface slope)
- 4'x4' clear space
- PAR — Pedestrian Access Route
- Zero curb exposure

CALC. BOOK NO. N/A

SDR DATE 20-JULY-2020

NOTE: All material and workmanship shall be in accordance with the current Oregon Standard Specifications

The selection and use of this Standard Drawing, while designed in accordance with generally accepted engineering principles and practices, is the sole responsibility of the user and should not be used without consulting a Registered Professional Engineer.

OREGON STANDARD DRAWINGS

PERPENDICULAR CURB RAMP SINGLE RAMP

2021

DATE	REVISION DESCRIPTION
07-2020	DRAWING CREATED

rd916.dgn 20-JUL-2020

RD916

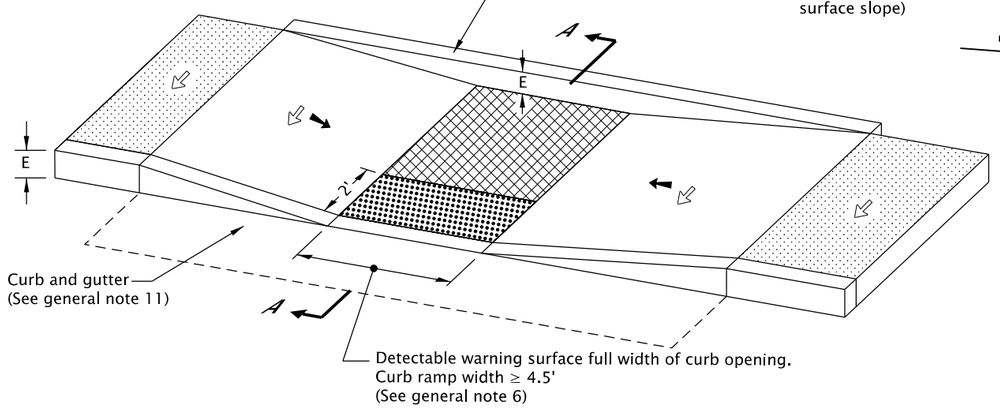

PARALLEL CURB RAMP DETAIL

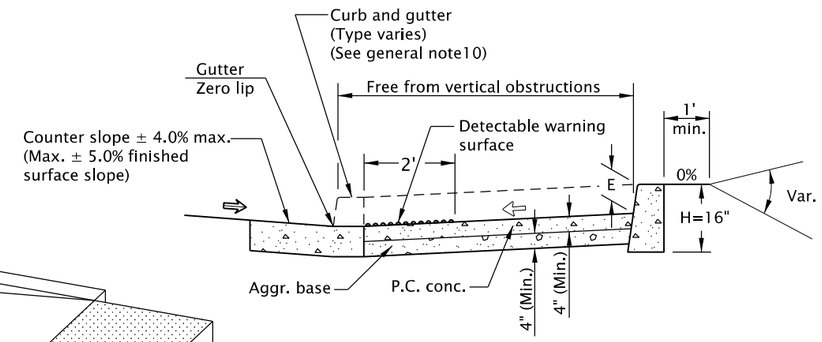

SECTION A-A

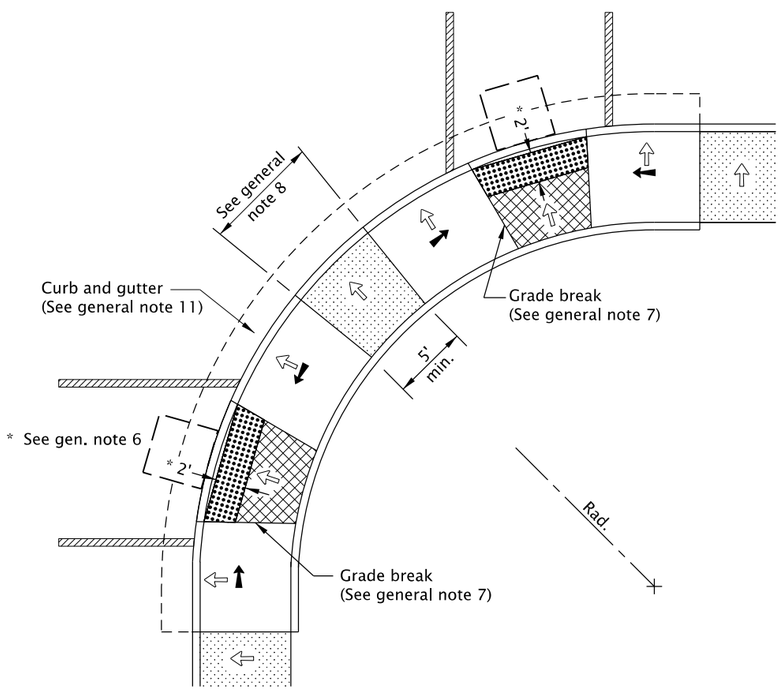

PARALLEL CURB RAMPS
OPTION "PL-1"

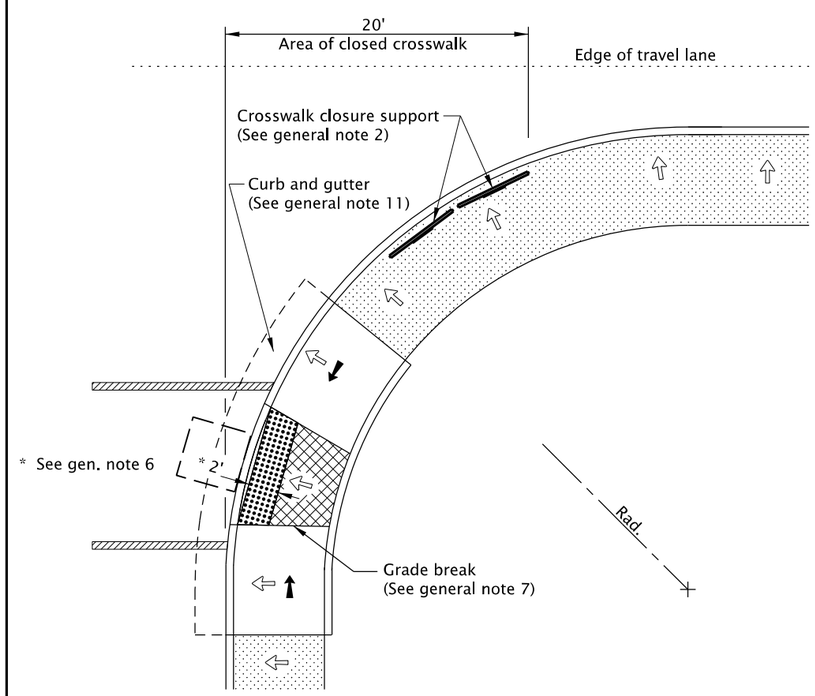

PARALLEL CURB RAMP WITH CROSSWALK CLOSURE
OPTION "PL-2"

GENERAL NOTES FOR ALL DETAILS ON THIS SHEET:

1. Curb ramp details are based on applicable ODOT Standards.
2. See Std. Dwgs. RD700 & RD701 for curbs.
   See Std. Dwgs. RD720 & RD721 for sidewalks.
   See Std. Dwgs. RD902 through RD908 for detectable warning surface installation details.
   See Std. Dwg. TM240 for crosswalk closure detail.
3. Site conditions normally require a project specific design. See project plans for details not shown.
4. Tooled dummy joints are required at all curb ramp grade break lines, (see Std. Dwg. RD722).
5. Curb ramp slopes shown are relative to the true level horizon (zero bubble).
6. Place detectable warning surface at the back of curb for a minimum depth of 2' in the direction of pedestrian travel full width of curb ramp opening that is adjacent to traffic.
7. Grade breaks at the top and bottom of curb ramp runs shall be perpendicular to the direction of the ramp run. Grade breaks shall not be permitted on the surface of ramp runs and turning spaces. Surface slopes that meet at grade breaks shall be flush.
8. When 2 ramp runs are immediately adjacent, the curb exposure (E) between the adjacent side may range between 3" and full design exposure.
9. Curb ramps for shared use paths intersecting a roadway shall be full width of path, excluding flares. When a curb ramp is used to provide bicycle access from a roadway to a sidewalk, the curb ramp opening will be ≥ 8' wide.
10. Place an inlet at upstream side of curb ramp or perform other approved design mitigation. Check the gutter flow depth at curb ramp locations to assure that the design flood does not overtop the back of sidewalk.
11. On or along state highways, curb and gutter is required at curb ramps.

LEGEND:

- Sidewalk
- Detectable warning surface
- Level area (Turning space/landing)
  Unobstructed 4.5' x 4.5'
  With obstruction 4.5' x 5.5' (Longer dimension in direction of pedestrian street crossing).
  For the purposes of this application, a max. 2.0% finished surface slope (for drainage) measured perpendicular in two directions is considered level.
- Cross slope 1.5% max.
  (Max. 2.0% finished surface slope)
  (Normal sidewalk cross slope)
- Running slope 7.5% max.
  (Max. 8.3% finished surface slope)
- Counter slope 4.0% max. ascending or descending,
  (Max. 5.0% finished surface slope)
  Slope as required for drainage
- 4'x4' clear space

CALC. BOOK NO. N/A

SDR DATE 20-JULY-2020

NOTE: All material and workmanship shall be in accordance with the current Oregon Standard Specifications

The selection and use of this Standard Drawing, while designed in accordance with generally accepted engineering principles and practices, is the sole responsibility of the user and should not be used without consulting a Registered Professional Engineer.

OREGON STANDARD DRAWINGS

PARALLEL CURB RAMP

2021

DATE	REVISION DESCRIPTION
07-2020	DRAWING CREATED

rd920.dgn 20-JUL-2020

RD920

Effective Date: December 1, 2020 - May 31, 2021

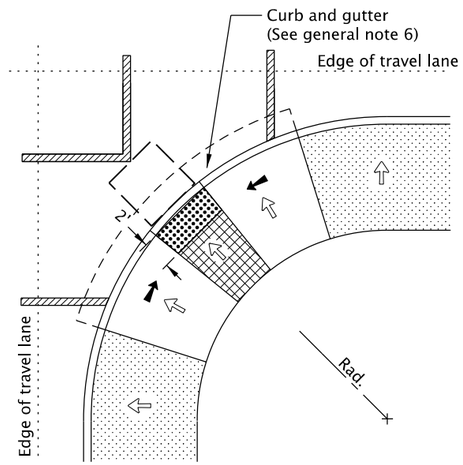

DIAGONAL PARALLEL CURB RAMP
OPTION "PL-3"

(Use only when site constraints prohibit installing two curb ramps)

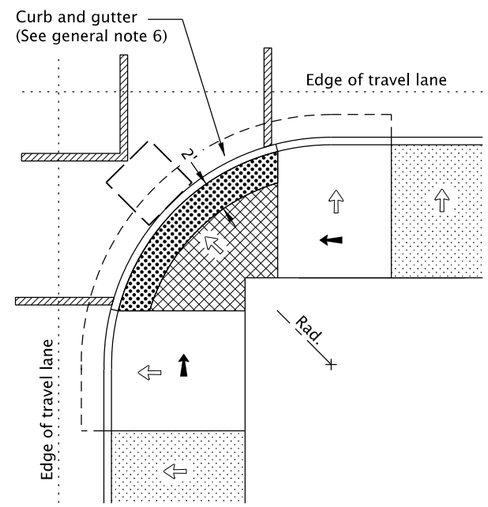

DEPRESSED CURB RAMP SMALL RADIUS
OPTION "PL-4"

(Use only when site constraints prohibit installing two curb ramps)

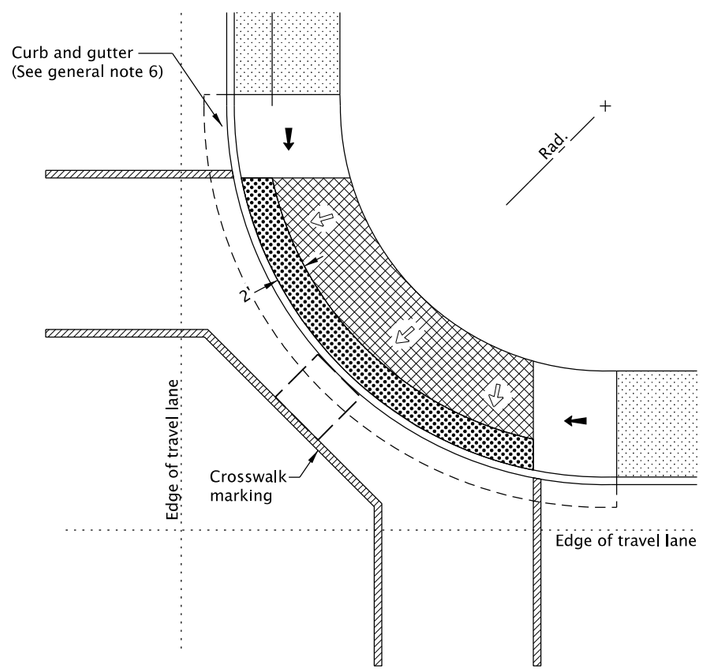

DEPRESSED CURB RAMP LARGE RADIUS
OPTION "PL-5"

(Use only when site constraints prohibit installing two curb ramps)

GENERAL NOTES FOR ALL DETAILS ON THIS SHEET:

1. Curb ramp details are based on applicable ODOT Standards.
2. See project plans for details not shown.
   See Std. Dwgs. RD700 & RD701 for curbs.
   See Std. Dwgs. RD720 & RD721 for sidewalks.
   See Std. Dwgs. RD902 through RD908 for detectable warning surface installation details.
   See Std. Dwg. RD920 for parallel curb ramp details.
3. Tooled dummy joints are required at all curb ramp slope break lines, (see Std. Dwg. RD722).
4. Curb ramp slopes shown are relative to the true level horizon (zero bubble).
5. Place an inlet at upstream side of curb ramp or perform other approved design mitigation. Check the gutter flow depth at curb ramp locations to assure that the design flood does not overtop the back of sidewalk.
6. On or along state highways, curb and gutter is required at curb ramps.
7. Grade breaks at the top and bottom of curb ramp runs shall be perpendicular to the direction of the ramp run. Grade breaks shall not be permitted on the surface of ramp runs and turning spaces. Surface slopes that meet at grade breaks shall be flush.
8. Only use curb ramp options allowed by jurisdiction. Single ramps require design exceptions on or along state highways.

LEGEND:

- Marked or intended crossing location
- Sidewalk
- Detectable warning surface
- Level area (Turning space/landing)
  Unobstructed 4.5' x 4.5'
  With obstruction 4.5' x 5.5' (Longer dimension in direction of pedestrian street crossing).
  For the purposes of this application, a max. 2.0% finished surface slope (for drainage) measured perpendicular in two directions is considered level.
- Cross slope 1.5% max.
  (Max. 2.0% finished surface slope)
  (Normal sidewalk cross slope)
- Running slope 7.5% max.
  (Max. 8.3% finished surface slope)
- 4'x4' clear space

CALC. BOOK NO. N/A

SDR DATE 20-JULY-2020

NOTE: All material and workmanship shall be in accordance with the current Oregon Standard Specifications

The selection and use of this Standard Drawing, while designed in accordance with generally accepted engineering principles and practices, is the sole responsibility of the user and should not be used without consulting a Registered Professional Engineer.

OREGON STANDARD DRAWINGS

PARALLEL CURB RAMP
SINGLE RAMP

2021

DATE	REVISION DESCRIPTION
07-2020	DRAWING CREATED

rd922.dgn 20-JUL-2020

RD922

Effective Date: December 1, 2020 - May 31, 2021

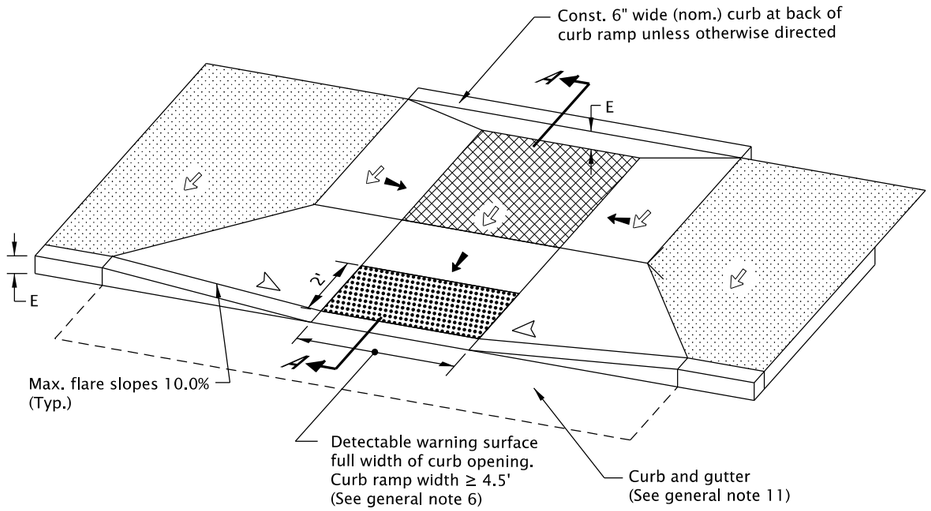

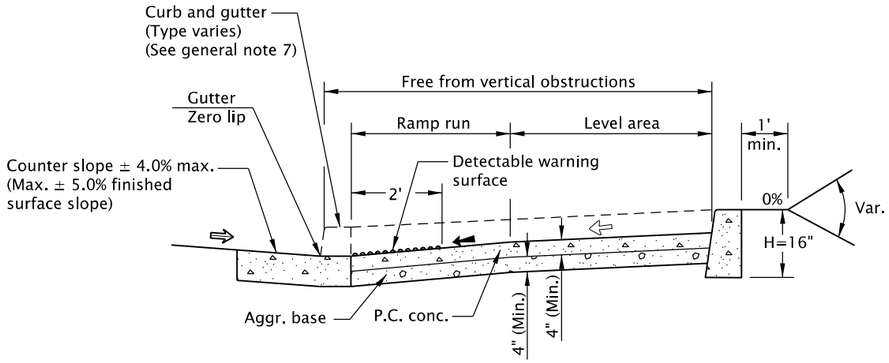

SECTION A-A

COMBINATION CURB RAMP DETAIL

GENERAL NOTES FOR ALL DETAILS ON THIS SHEET:

1. Curb ramp details are based on applicable ODOT Standards.
2. See project plans for details not shown.
   See Std. Dwgs. RD700 & RD701 for curbs.
   See Std. Dwgs. RD720 & RD721 for sidewalks.
   See Std. Dwgs. RD902 through RD908 for detectable warning surface installation details.
3. Site conditions normally require a project specific design. See project plans for details not shown.
4. Tooled dummy joints are required at all curb ramp slope break lines, (see Std. Dwg. RD722).
5. Curb ramp slopes shown are relative to the true level horizon (zero bubble).
6. Place detectable warning surface at the back of curb for a minimum depth of 2' in the direction of pedestrian travel full width of curb ramp opening that is adjacent to traffic.
7. Place an inlet at upstream side of curb ramp or perform other approved design mitigation. Check the gutter flow depth at curb ramp locations to assure that the design flood does not overtop the back of sidewalk.
8. Return curb may be provided in lieu of flared slope only if protected from traverse travel by landscaping. Return curb shall not reduce width of approaching sidewalk.
9. Curb ramps for shared use paths intersecting a roadway shall be full width of path, excluding flares. When a curb ramp is used to provide bicycle access from a roadway to a sidewalk, the curb ramp opening will be ≥ 8' wide.
10. When 2 curb ramps are immediately adjacent, the curb exposure (E) between the adjacent side flares may range between 3" and full design exposure.
11. On or along state highways, curb and gutter is required at curb ramps.
12. Grade breaks at the top and bottom of curb ramp runs shall be perpendicular to the direction of the ramp run. Grade breaks shall not be permitted on the surface of ramp runs and turning spaces. Surface slopes that meet at grade breaks shall be flush.

LEGEND:

- Marked or intended crossing location
- Sidewalk
- Detectable warning surface
- Level area (Turning space/landing)
  Unobstructed 4.5' x 4.5'
  With obstruction 4.5' x 5.5' (Longer dimension in direction of pedestrian street crossing).
  For the purposes of this application, a max. 2.0% finished surface slope (for drainage) measured perpendicular in two directions is considered level.
- Cross slope 1.5% max.
  (Max. 2.0% finished surface slope)
  (Normal sidewalk cross slope)
- Running slope 7.5% max.
  (Max. 8.3% finished surface slope)
- Counter slope 4.0% max. ascending or descending,
  (Max. 5.0% finished surface slope)
  Slope as required for drainage
- Flare slope
  (Max. 10% finished surface slope)

CALC. BOOK NO. N/A

SDR DATE 20-JULY-2020

NOTE: All material and workmanship shall be in accordance with the current Oregon Standard Specifications

The selection and use of this Standard Drawing, while designed in accordance with generally accepted engineering principles and practices, is the sole responsibility of the user and should not be used without consulting a Registered Professional Engineer.

OREGON STANDARD DRAWINGS

COMBINATION CURB RAMP

2021

DATE	REVISION DESCRIPTION
07-2020	DRAWING CREATED

rd930.dgn 20-JUL-2020

RD930

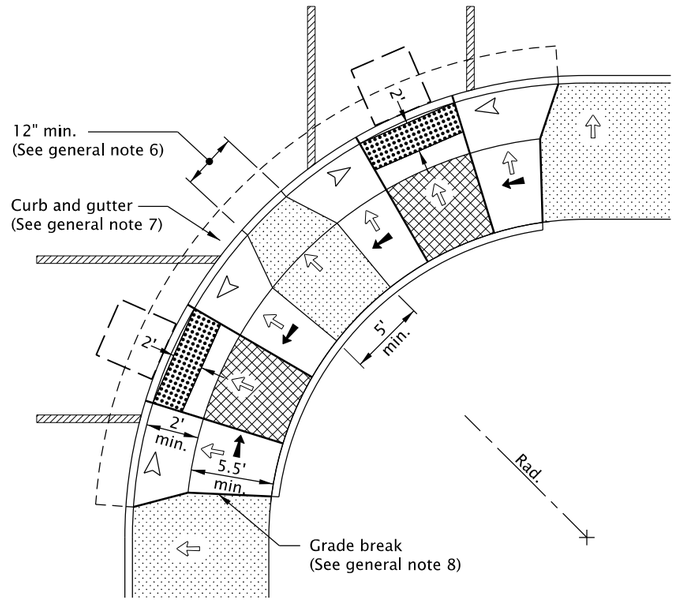

COMBINATION CURB RAMPS
OPTION "CC-1"

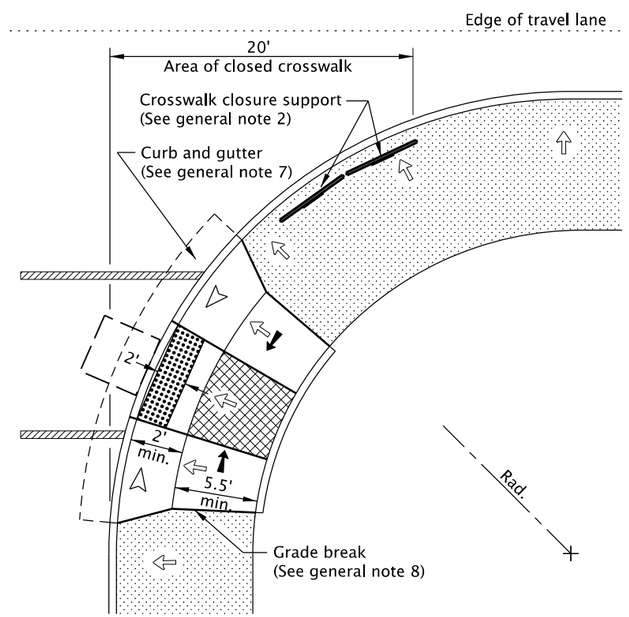

COMBINATION CURB RAMP WITH CROSSWALK CLOSURE
OPTION "CC-2"

GENERAL NOTES FOR ALL DETAILS ON THIS SHEET:

1. Curb ramp details are based on applicable ODOT Standards.
2. See project plans for details not shown.
   See Std. Dwgs. RD700 & RD701 for curbs.
   See Std. Dwgs. RD720 & RD721 for sidewalks.
   See Std. Dwgs. RD902 through RD908 for detectable warning surface installation details.
   See Std. Dwg. RD930 for combination curb ramp details.
   See Std. Dwg. TM240 for crosswalk closure detail.
3. Site conditions normally require a project specific design. See project plans for details not shown.
4. Tooled dummy joints are required at all curb ramp slope break lines, (see Std. Dwg. RD722).
5. Curb ramp slopes shown are relative to the true level horizon (zero bubble).
6. When 2 curb ramps are immediately adjacent, the curb exposure (E) between the adjacent side flares may range between 3" and full design exposure.
7. On or along state highways, curb and gutter is required at curb ramps.
8. Grade breaks at the top and bottom of curb ramp runs shall be perpendicular to the direction of the ramp run. Grade breaks shall not be permitted on the surface of ramp runs and turning spaces. Surface slopes that meet at grade breaks shall be flush.

LEGEND:

- Marked or intended crossing location
- Sidewalk
- Detectable warning surface
- Level area (Turning space/landing)
  Unobstructed 4.5' x 4.5'
  With obstruction 4.5' x 5.5' (Longer dimension in direction of pedestrian street crossing).
  For the purposes of this application, a max. 2.0% finished surface slope (for drainage) measured perpendicular in two directions is considered level.
- Cross slope 1.5% max.
  (Max. 2.0% finished surface slope)
  (Normal sidewalk cross slope)
- Running slope 7.5% max.
  (Max. 8.3% finished surface slope)
- Flare slope
  (Max. 10% finished surface slope)
- 4'x4' clear space

CALC. BOOK NO. N/A

SDR DATE 20-JULY-2020

NOTE: All material and workmanship shall be in accordance with the current Oregon Standard Specifications

The selection and use of this Standard Drawing, while designed in accordance with generally accepted engineering principles and practices, is the sole responsibility of the user and should not be used without consulting a Registered Professional Engineer.

OREGON STANDARD DRAWINGS

COMBINATION CURB RAMP

2021

DATE	REVISION DESCRIPTION
07-2020	DRAWING CREATED

rd932.dgn 20-JUL-2020

RD932

Effective Date: December 1, 2020 - May 31, 2021

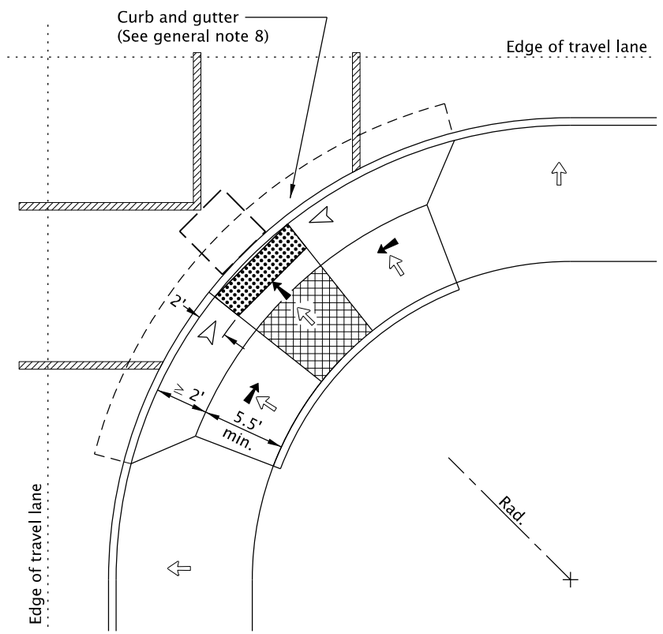

DIAGONAL COMBINATION CURB RAMP
OPTION "CC-10"

(Use only when site constraints prohibit installing two curb ramps)

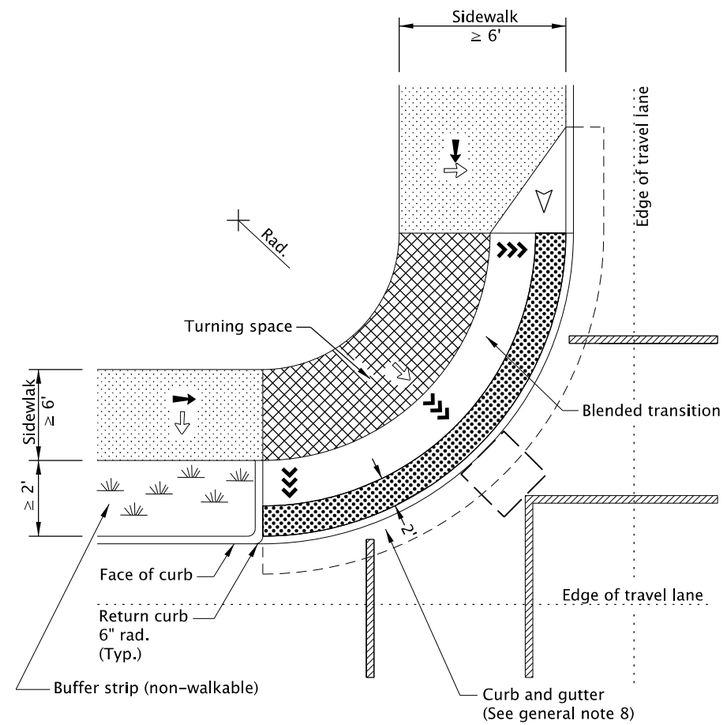

BLENDED TRANSITION COMBINATION CURB RAMP
OPTION "CC-11"

(Use only when site constraints prohibit installing two curb ramps)

GENERAL NOTES FOR ALL DETAILS ON THIS SHEET:

1. Curb ramp details are based on applicable ODOT Standards.
2. See project plans for details not shown.
   See Std. Dwgs. RD700 & RD701 for curbs.
   See Std. Dwgs. RD720 & RD721 for sidewalks.
   See Std. Dwgs. RD902 through RD908 for detectable warning surface installation details.
   See Std. Dwg. RD930 for combination curb ramp details.
3. Site conditions normally require a project specific design. See project plans for details not shown.
4. Tooled dummy joints are required at all curb ramp slope break lines, (see Std. Dwg. RD722).
5. Curb ramp slopes shown are relative to the true level horizon (zero bubble).
6. Return curb may be provided in lieu of flared slope only if protected from traverse travel by landscaping. Return curb shall not reduce width of approaching sidewalk.
7. Only use options allowed by jurisdiction.
8. On or along state highways, curb and gutter is required at curb ramps.
9. Grade breaks at the top and bottom of curb ramp runs shall be perpendicular to the direction of the ramp run. Grade breaks shall not be permitted on the surface of ramp runs and turning spaces. Surface slopes that meet at grade breaks shall be flush.

LEGEND:

- Marked or intended crossing location
- Sidewalk
- Detectable warning surface
- Level area (Turning space/landing)
  Unobstructed 4.5' x 4.5'
  With obstruction 4.5' x 5.5' (Longer dimension in direction of pedestrian street crossing).
  For the purposes of this application, a max. 2.0% finished surface slope (for drainage) measured perpendicular in two directions is considered level.
- Cross slope 1.5% max.
  (Max. 2.0% finished surface slope)
  (Normal sidewalk cross slope)
- Running slope 7.5% max.
  (Max. 8.3% finished surface slope)
- Running slope
  (Max. 4.9% finished surface slope)
- Flare slope
  (Max. 10% finished surface slope)
- 4'x4' clear space

CALC. BOOK NO. N/A

SDR DATE 20-JULY-2020

NOTE: All material and workmanship shall be in accordance with the current Oregon Standard Specifications

The selection and use of this Standard Drawing, while designed in accordance with generally accepted engineering principles and practices, is the sole responsibility of the user and should not be used without consulting a Registered Professional Engineer.

OREGON STANDARD DRAWINGS

COMBINATION CURB RAMP SINGLE RAMP

2021

DATE	REVISION DESCRIPTION
07-2020	DRAWING CREATED

rd938.dgn 20-JUL-2020

RD938

Effective Date: December 1, 2020 - May 31, 2021

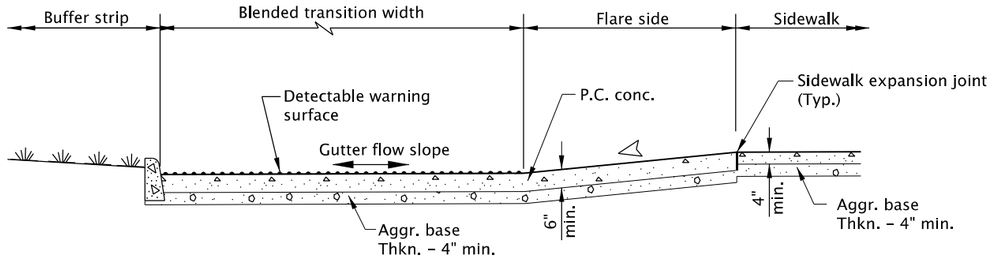

SECTION B-B

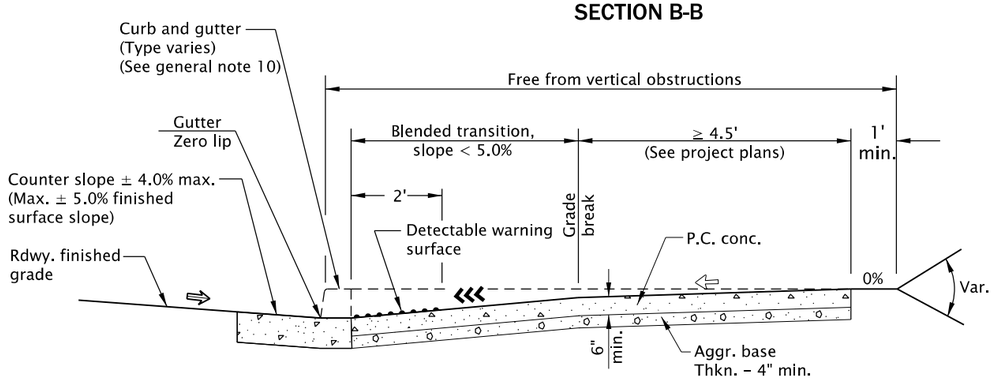

SECTION A-A

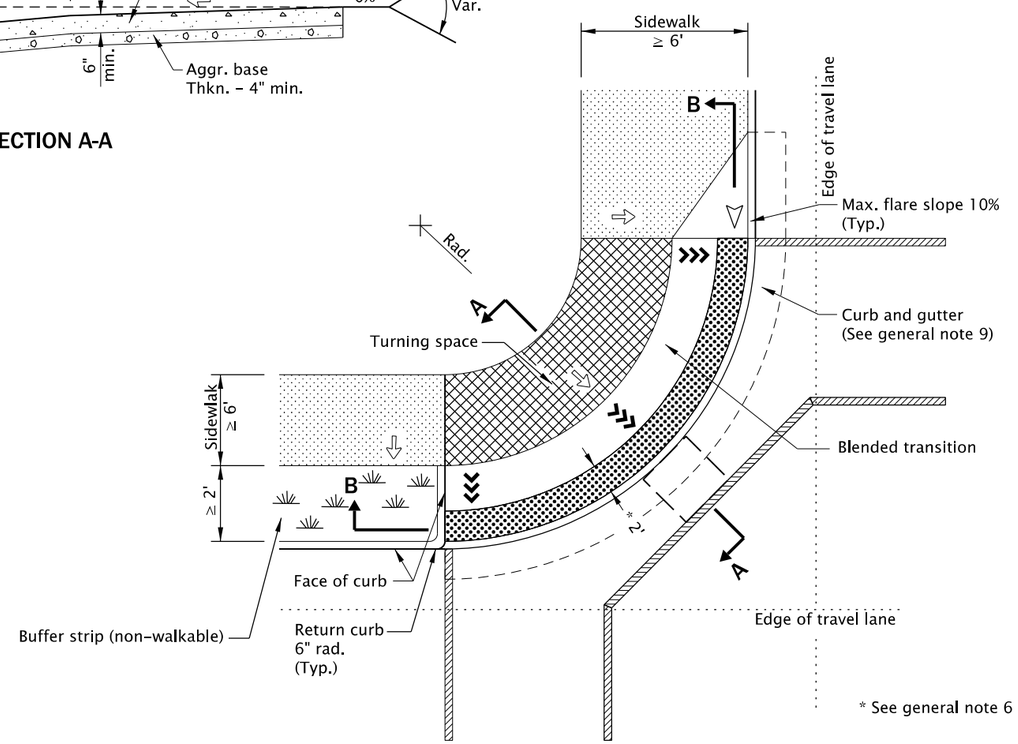

DIAGONAL BLENDED TRANSITION CURB RAMP

GENERAL NOTES FOR ALL DETAILS ON THIS SHEET:

1. Curb ramp details are based on applicable ODOT Standards.
2. See project plans for details not shown.
   See Std. Dwgs. RD700 & RD701 for curbs.
   See Std. Dwgs. RD720 & RD721 for sidewalks.
   See Std. Dwgs. RD902 through RD908 for detectable warning surface installation details.
3. Site conditions normally require a project specific design. See project plans for details not shown.
4. Tooled dummy joints are required at all curb ramp slope break lines, (see Std. Dwg. RD722).
5. Curb ramp slopes shown are relative to the true level horizon (zero bubble).
6. Place detectable warning surface at the back of curb for a minimum depth of 2' in the direction of pedestrian travel full width of curb ramp opening that is adjacent to traffic.
7. Grade breaks shall not be permitted on the surface of ramp runs and turning spaces. Surface slopes that meet at grade breaks shall be flush.
8. Return curb may be provided in lieu of flared slope only if protected from traverse by landscaping. Return curb shall not reduce width of approaching sidewalk.
9. Curb ramps for shared use paths intersecting a roadway shall be full width of path, excluding flares. When a curb ramp is used to provide bicycle access from a roadway to a sidewalk, the curb ramp opening will be ≥ 8' wide.
10. Place an inlet at upstream side of curb ramp or perform other approved design mitigation. Check the gutter flow depth at curb ramp locations to assure that the design flood does not overtop the back of sidewalk.
11. On or along state highways, curb and gutter is required at curb ramps.
12. Only use curb ramp options allowed by jurisdiction. Single ramp requires design exceptions on or along state highways.

LEGEND:

- Marked or intended crossing location
- Sidewalk
- Detectable warning surface
- Level area (Turning space/landing)
  Unobstructed 4.5' x 4.5'
  With obstruction 4.5' x 5.5' (Longer dimension in direction of pedestrian street crossing).
  For the purposes of this application, a max. 2.0% finished surface slope (for drainage) measured perpendicular in two directions is considered level.
- Cross slope 1.5% max.
  (Max. 2.0% finished surface slope)
  (Normal sidewalk cross slope)
- Counter slope 4.0% max. ascending or descending
  (Max. 5.0% finished surface slope)
  Slope as required for drainage
- Running slope
  (Max. 4.9% finished surface slope)
- Flare slope
  (Max. 10% finished surface slope)
- 4'x4' clear space

CALC. BOOK NO. N/A

SDR DATE 20-JULY-2020

NOTE: All material and workmanship shall be in accordance with the current Oregon Standard Specifications

The selection and use of this Standard Drawing, while designed in accordance with generally accepted engineering principles and practices, is the sole responsibility of the user and should not be used without consulting a Registered Professional Engineer.

OREGON STANDARD DRAWINGS

BLENDED TRANSITION CURB RAMP SINGLE RAMP

2021

DATE	REVISION DESCRIPTION
07-2020	DRAWING CREATED

rd940.dgn 20-JUL-2020

RD940

Effective Date: December 1, 2020 - May 31, 2021

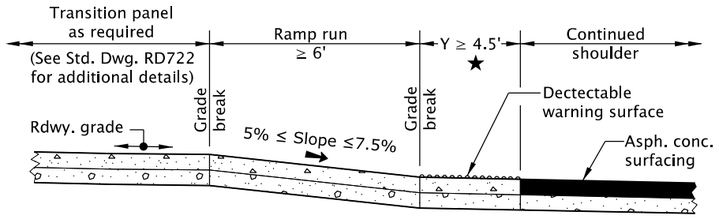

SECTION A-A

★ See general note 12

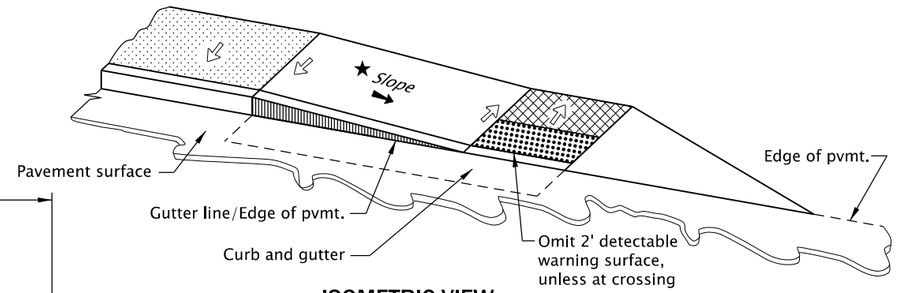

ISOMETRIC VIEW

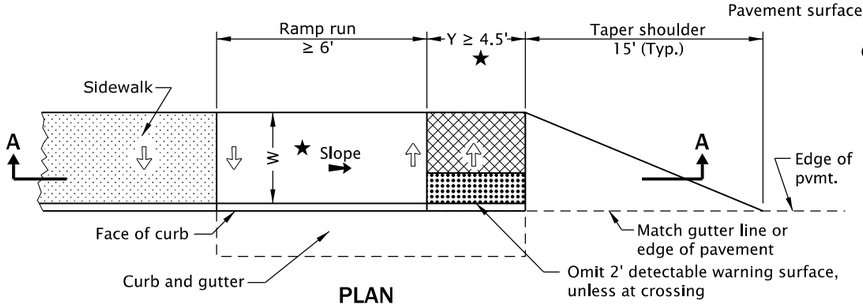

PLAN

TAPER OPTION "EW-1"

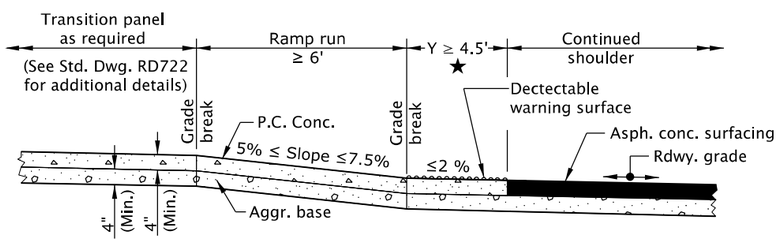

SECTION B-B

★ See general note 12

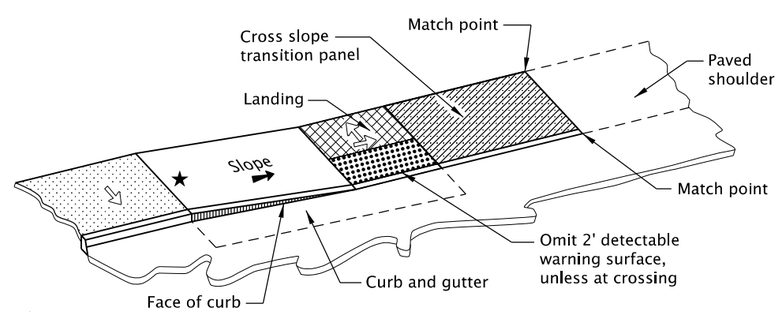

ISOMETRIC VIEW

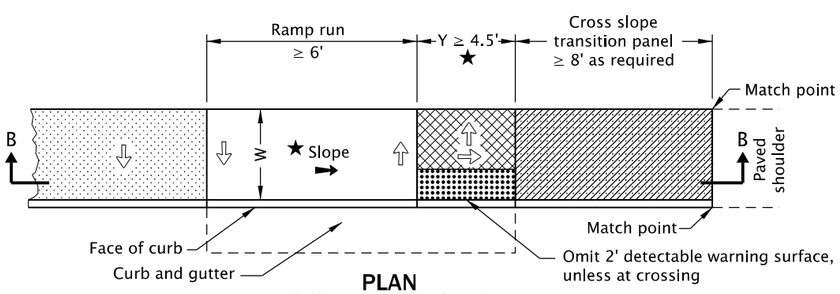

PLAN
(Curb ramp > 5.0% shown)

SHOULDER OPTION "EW-2"

GENERAL NOTES FOR ALL DETAILS ON THIS SHEET:

1. Curb ramp details are based on applicable ODOT Standards.
2. See project plans for details not shown.
   See Std. Dwgs. RD700 & RD701 for curbs.
   See Std. Dwgs. RD720 & RD721 for sidewalks.
   See Std. Dwg. RD722 for transition panel details.
   See Std. Dwgs. RD902 through RD908 for detectable warning surface installation details.
3. Site conditions normally require a project special design. See project plans for details not shown.
4. Tooled dummy joints are required at all curb ramp grade break lines, (see Std. Dwg. RD722).
5. Curb ramp slopes shown are relative to the true level horizon (zero bubble).
6. Place detectable warning surface at the back of curb for a minimum depth of 2' at curb ramp that is adjacent to traffic.
7. Place an inlet at upstream side of curb ramp or perform other approved design mitigation. Check the gutter flow depth at curb ramp locations to assure that the design flood does not overtop the back of sidewalk.
8. When a shared use path terminates, the curb ramp shall be the full width of the path, the turning space Y-dimension should be minimum 8' wide to enable bicycles to ride from ramp to shoulder.
9. Grade breaks at the top and bottom of curb ramp runs shall be perpendicular to the direction of the ramp run. Grade breaks shall not be permitted on the surface of ramp runs and turning spaces. Surface slopes that meet at grade breaks shall be flush.
10. On or along state highways, curb and gutter is required at curb ramps.
11. All end of sidewalk options can be used for curved or tangent roadway sections. Superelated roadways require site specific details.
12. When the slope of the ramp run is greater than 5.0%, a min. landing space of 4.5' x 4.5' with a 1.5% max. slope (2.0% finished surface) is required at the bottom of the curb ramp.
    See section A-A & section B-B.

LEGEND:

- Sidewalk
- Transition panel
- Detectable warning surface
- Level area (Turning space/landing)
  Unobstructed 4.5' x 4.5'
  With obstruction 4.5' x 5.5' (Longer dimension in direction of pedestrian street crossing).
  For the purposes of this application, a max. 2.0% finished surface slope (for drainage) measured perpendicular in two directions is considered level.
- ⇦ Cross slope 1.5% max.
  (Max. 2.0% finished surface slope)
  (Normal sidewalk cross slope)
- ← Running slope 7.5% max.
  (Max. 8.3% finished surface slope)
- W New construction sidewalk width.
  See contract plans for dimension.

CALC. BOOK NO. N/A

SDR DATE 20-JULY-2020

NOTE: All material and workmanship shall be in accordance with the current Oregon Standard Specifications

The selection and use of this Standard Drawing, while designed in accordance with generally accepted engineering principles and practices, is the sole responsibility of the user and should not be used without consulting a Registered Professional Engineer.

OREGON STANDARD DRAWINGS

END OF WALK CURB RAMP

2021

DATE	REVISION DESCRIPTION
07-2020	DRAWING CREATED

rd950.dgn 20-JUL-2020

RD950

Effective Date: December 1, 2020 - May 31, 2021

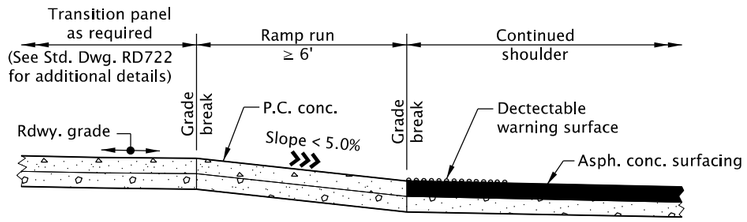

SECTION A-A

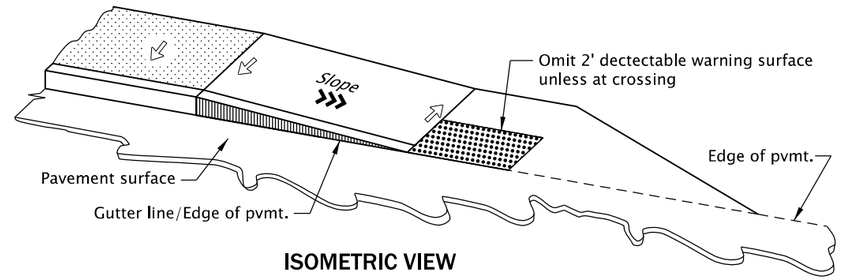

ISOMETRIC VIEW

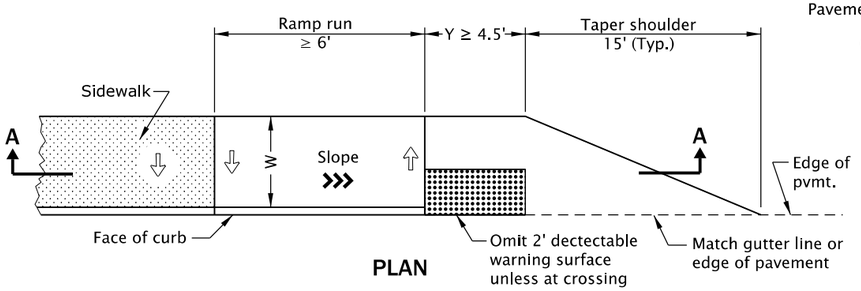

PLAN

BLENDED TRANSITION TAPER OPTION "EW-3"

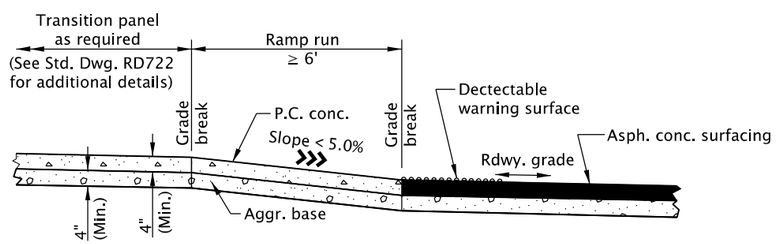

SECTION B-B

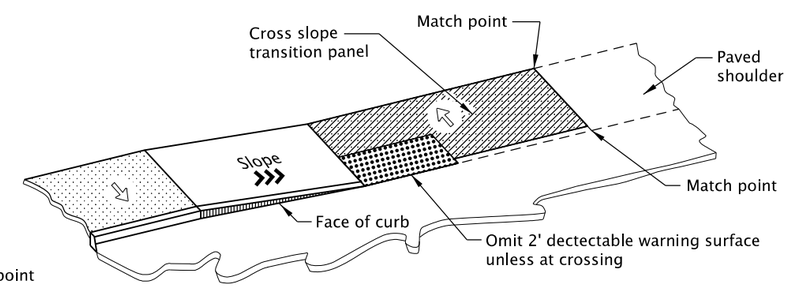

ISOMETRIC VIEW

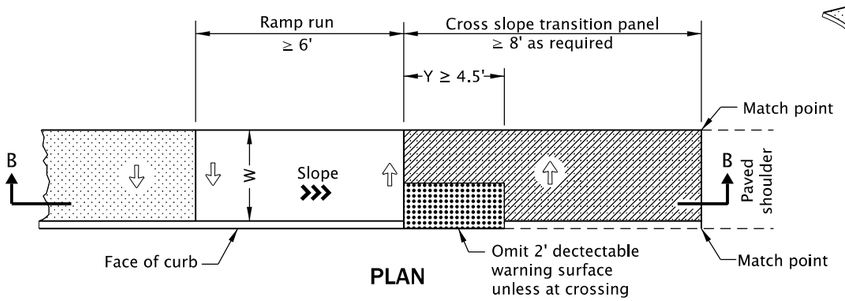

PLAN

BLENDED TRANSITION SHOULDER OPTION "EW-4"

GENERAL NOTES FOR ALL DETAILS ON THIS SHEET:

1. Curb ramp details are based on applicable ODOT Standards.
2. See project plans for details not shown.
   See Std. Dwgs. RD700 & RD701 for curbs.
   See Std. Dwgs. RD720 & RD721 for sidewalks.
   See Std. Dwg. RD722 for transition panel details.
   See Std. Dwgs. RD902 through RD908 for detectable warning surface installation details.
3. Site conditions normally require a project special design. See project plans for details not shown.
4. Tooled dummy joints are required at all curb ramp grade break lines, (see Std. Dwg. RD722).
5. Curb ramp slopes shown are relative to the true level horizon (zero bubble).
6. Place detectable warning surface at the back of curb for a minimum depth of 2' at curb ramp that is adjacent to traffic. When there is no curb, the detectable warning surface shall be placed at the edge of roadway.
7. Place an inlet at upstream side of curb ramp or perform other approved design mitigation. Check the gutter flow depth at curb ramp locations to assure that the design flood does not overtop the back of sidewalk.
8. When a shared use path terminates, the curb ramp shall be the full width of the path, the turning space Y-dimension should be minimum 8' wide to enable bicycles to ride from ramp to shoulder.
9. Grade breaks at the top and bottom of curb ramp runs shall be perpendicular to the direction of the ramp run. Grade breaks shall not be permitted on the surface of ramp runs and turning spaces. Surface slopes that meet at grade breaks shall be flush.
10. All end of sidewalk options can be used for curved or tangent roadway sections. Superelated roadways require site specific details.

LEGEND:

- Sidewalk
- Transition panel
- Detectable warning surface
- Cross slope 1.5% max. (Max. 2.0% finished surface slope) (Normal sidewalk cross slope)
- Running slope (Max. 4.9% finished surface slope)
- W — New construction sidewalk width. See contract plans for dimension.

CALC. BOOK NO. N/A

SDR DATE 20-JULY-2020

NOTE: All material and workmanship shall be in accordance with the current Oregon Standard Specifications

The selection and use of this Standard Drawing, while designed in accordance with generally accepted engineering principles and practices, is the sole responsibility of the user and should not be used without consulting a Registered Professional Engineer.

OREGON STANDARD DRAWINGS

END OF WALK CURB RAMP

2021

DATE	REVISION DESCRIPTION
07-2020	DRAWING CREATED

rd952.dgn 20-JUL-2020

RD952

Effective Date: December 1, 2020 - May 31, 2021

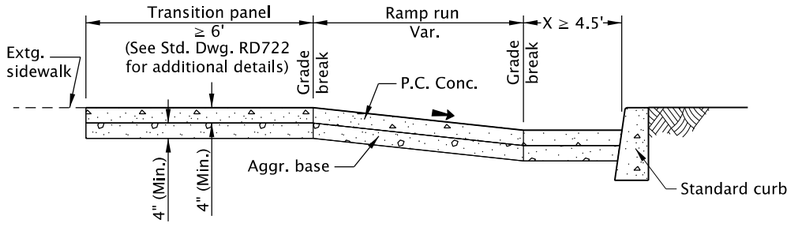

SECTION B-B

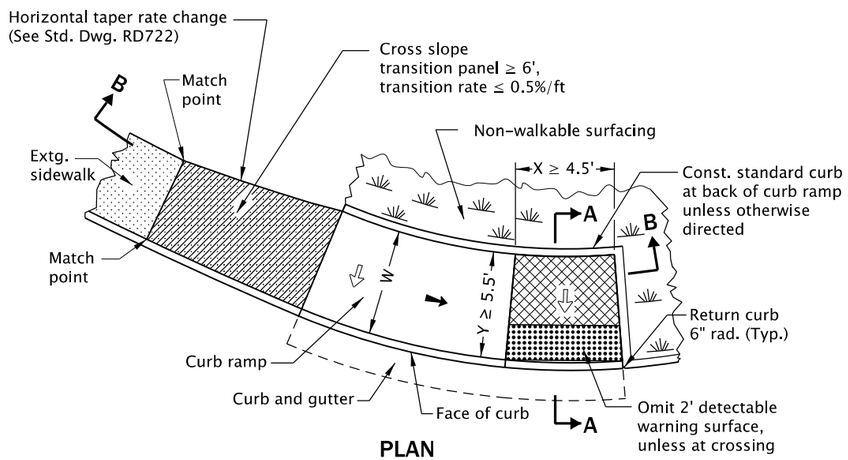

PLAN

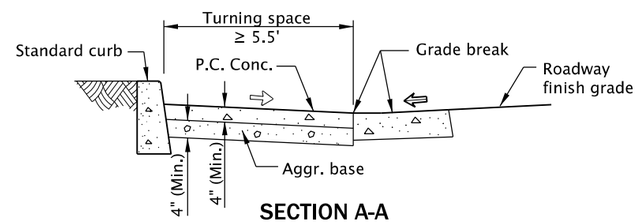

SECTION A-A

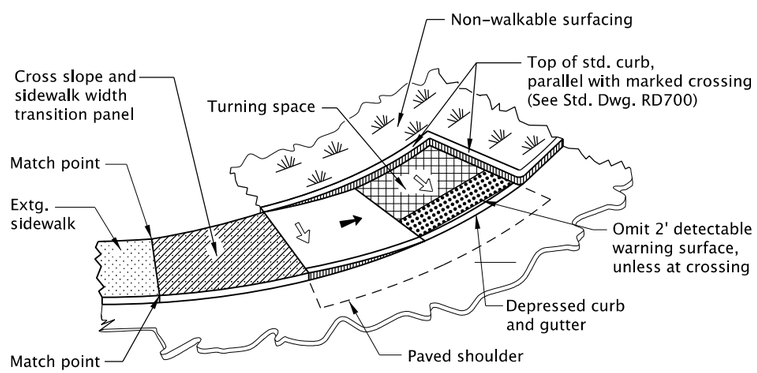

ISOMETRIC VIEW

CURBED OPTION

GENERAL NOTES FOR ALL DETAILS ON THIS SHEET:

1. Curb ramp details are based on applicable ODOT applicable Standards.
2. See project plans for details not shown.
   See Std. Dwgs. RD700 & RD701 for curbs.
   See Std. Dwgs. RD720 & RD721 for sidewalks.
   See Std. Dwg. RD722 for transition panel details.
   See Std. Dwgs. RD902 through RD908 for detectable warning surface installation details.
   See Std. Dwg. RD920 for parallel curb ramp details.
3. Site conditions normally require a project special design. See project plans for details not shown.
4. Tooled dummy joints are required at all curb ramp grade break lines, (see Std. Dwg. RD722).
5. Curb ramp slopes shown are relative to the true level horizon (zero bubble).
6. Place detectable warning surface at the back of curb for a minimum depth of 2' in the direction of pedestrian travel full width of curb ramp opening that is adjacent to traffic.
7. Place an inlet at upstream side of curb ramp or perform other approved design mitigation. Check the gutter flow depth at curb ramp locations to assure that the design flood does not overtop the back of sidewalk.
8. When a shared use path terminates, the curb ramp shall be the full width of the path, the turning space Y-dimension should be minimum 8' wide to enable bicycles to ride from ramp to shoulder.
9. Grade breaks at the top and bottom of curb ramp runs shall be perpendicular to the direction of the ramp run. Grade breaks shall not be permitted on the surface of ramp runs and turning spaces. Surface slopes that meet at grade breaks shall be flush.
10. On or along state highways, curb and gutter is required at curb ramps.
11. Unique curb ramp option can be used for curved or tangent roadway sections. Superelevated roadways require a site specific detail.

LEGEND:

- Sidewalk
- Transition panel
- Detectable warning surface
- Level area (Turning space/landing)
  Unobstructed 4.5' x 4.5'
  With obstruction 4.5' x 5.5' (Longer dimension in direction of pedestrian street crossing).
  For the purposes of this application, a max. 2.0% finished surface slope (for drainage) measured perpendicular in two directions is considered level.
- ⇦ Cross slope 1.5% max.
  (Max. 2.0% finished surface slope)
  (Normal sidewalk cross slope)
- ← Running slope 7.5% max.
  (Max. 8.3% finished surface slope)
- ⇦ Counter slope 4.0% max. ascending or descending,
  (Max. 5.0% finished surface slope)
  Slope as required for drainage
- W New construction sidewalk width. See contract plans for dimension

CALC. BOOK NO. N/A

SDR DATE 20-JULY-2020

NOTE: All material and workmanship shall be in accordance with the current Oregon Standard Specifications

The selection and use of this Standard Drawing, while designed in accordance with generally accepted engineering principles and practices, is the sole responsibility of the user and should not be used without consulting a Registered Professional Engineer.

OREGON STANDARD DRAWINGS

UNIQUE CURB RAMP

2021

DATE	REVISION DESCRIPTION
07-2020	DRAWING CREATED

rd960.dgn 20-JUL-2020

RD960

Effective Date: December 1, 2020 - May 31, 2021

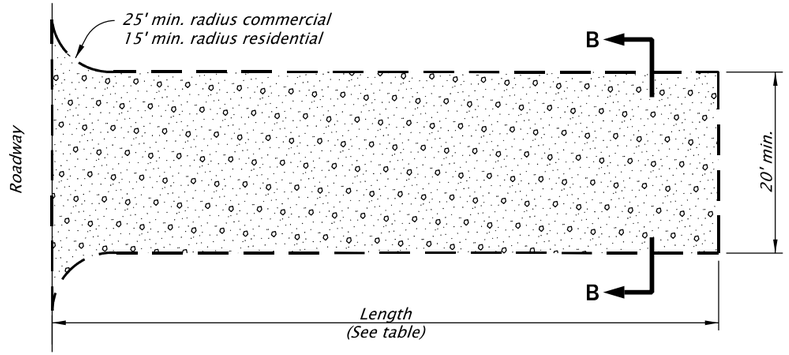

CONSTRUCTION ENTRANCE - TYPE 1

NOT TO SCALE

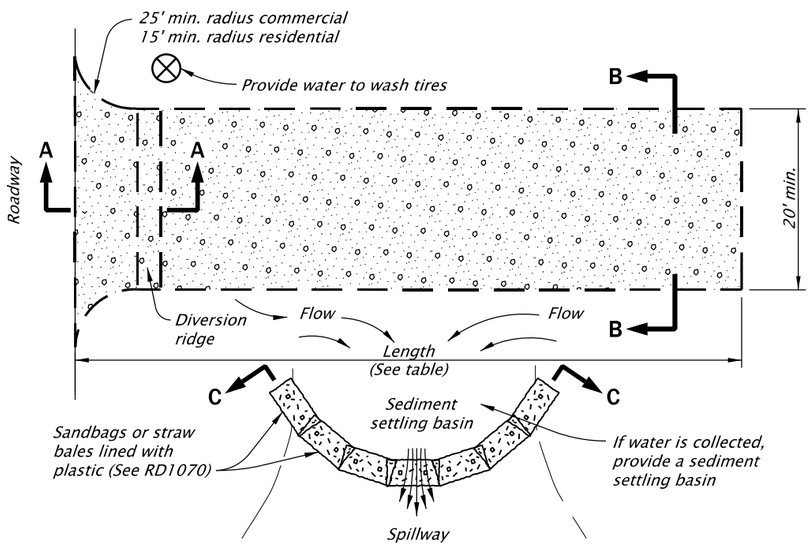

CONSTRUCTION ENTRANCE - TYPE 2

NOT TO SCALE

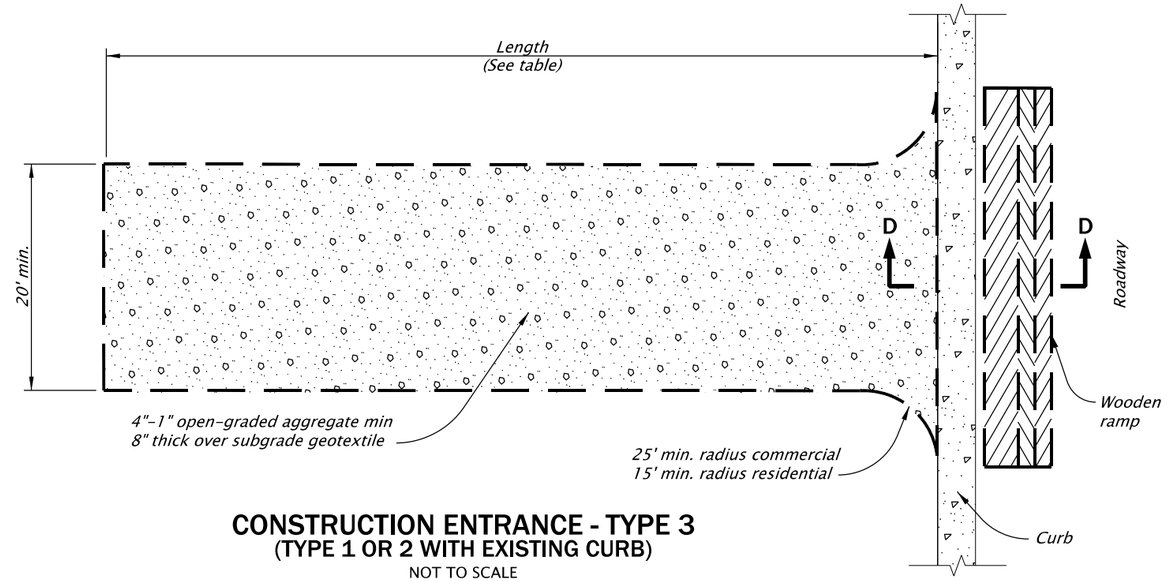

CONSTRUCTION ENTRANCE - TYPE 3
(TYPE 1 OR 2 WITH EXISTING CURB)

NOT TO SCALE

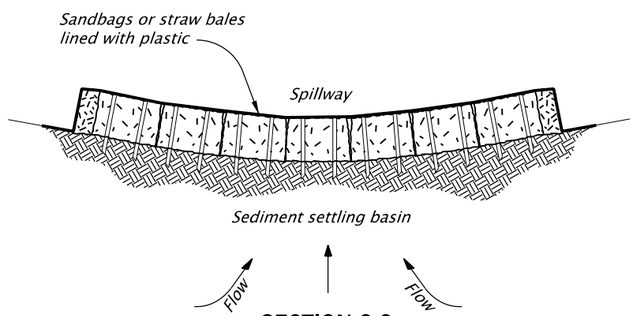

SECTION C-C

NOT TO SCALE

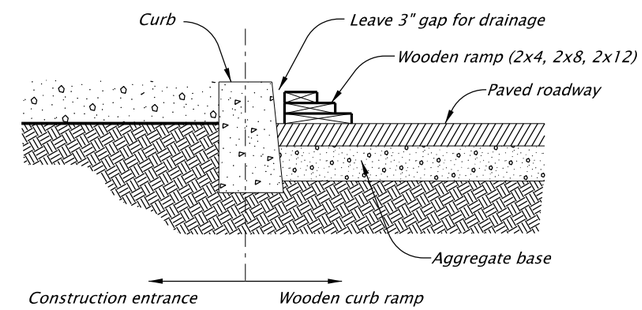

WOODEN CURB RAMP SECTION D-D

NOT TO SCALE

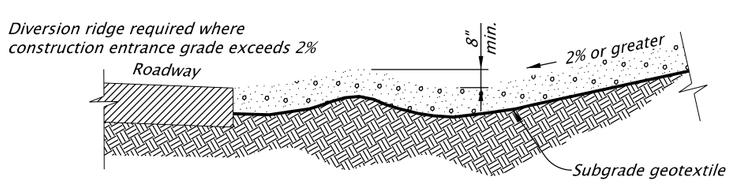

SECTION A-A

NOT TO SCALE

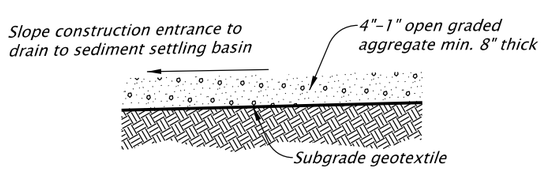

SECTION B-B

NOT TO SCALE

NOTES:

1. The Type 1 entrance is a simple entrance without a diversion ridge or settling basin.
2. The wooden ramp may be used on either Type 1 or Type 2 entrances in situations where there is curb and the curb is not removed for the construction entrance.

CONSTRUCTION ENTRANCE TABLE MINIMUM LENGTH	
Length (FT)	Area Of Exposed Soil (Acre)
20	0.25
50	0.25 < A < 1.0
100	A > 1.0

CALC. BOOK NO. 6408

SDR DATE July, 2020

NOTE: All material and workmanship shall be in accordance with the current Oregon Standard Specifications

The selection and use of this Standard Drawing, while designed in accordance with generally accepted engineering principles and practices, is the sole responsibility of the user and should not be used without consulting a Registered Professional Engineer.

OREGON STANDARD DRAWINGS

CONSTRUCTION ENTRANCES

2021

DATE	REVISION DESCRIPTION

rd1000.dgn 07-01-2020

RD1000

Effective Date: December 1, 2020 - May 31, 2021

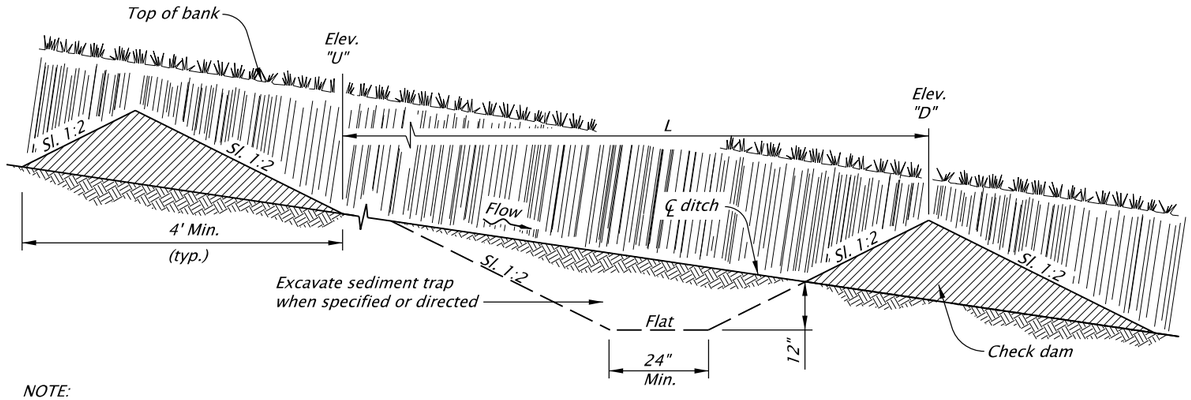

NOTE:
L = Spacing along swale or ditch so that Elevation "U" equals Elevation "D".

TYPICAL PROFILE SECTION CHECK DAMS
(SHOWN WITH AGGREGATE)
NOT TO SCALE

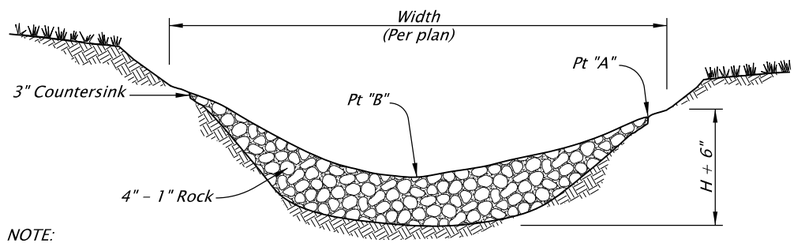

NOTE:
Pt "A" must be a minimum of 6" higher than Pt "B"

AGGREGATE CHECK DAM - TYPE 1
NOT TO SCALE

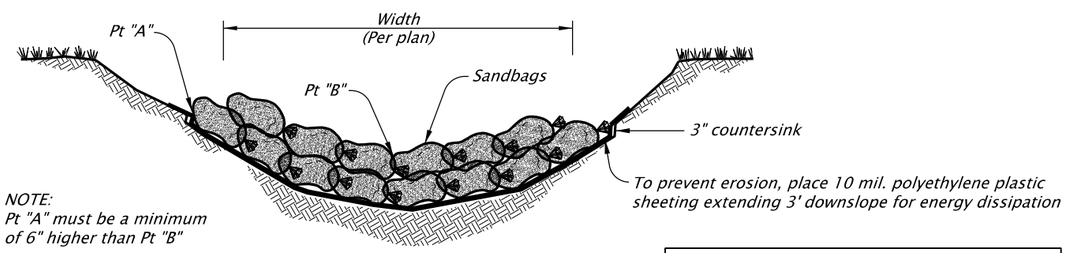

NOTE:
Pt "A" must be a minimum of 6" higher than Pt "B"

SANDBAG CHECK DAM - TYPE 4
NOT TO SCALE

MAXIMUM CHECK DAM SPACING "L"				
Ditch Grade	H=8"	H=12"	H=18"	H=24"
10%	* *	* *	15'	20'
9%	* *	* *	16'	22'
8%	* *	* *	18'	25'
7%	* *	* *	21'	28'
6%	* *	16'	25'	33'
5%	* *	20'	30'	40'
4%	16'	25'	37'	50'
3%	22'	33'	50'	66'
2%	33'	50'	75'	100'

* * Not allowed H = Min. dam height

NOTES:
1. Type 3 - stake biofilter bags with two 2"x2"x18" (minimum) wood stakes per bag. Drive stakes a minimum of 6" into the ground and flush with the top of the bags. Omit stakes if placed over paved surfaces. Overlap bags 12" minimum at each joint.
2. Type 4 - Tightly abut or overlap ends of sandbags at each joint.
3. Spacing between check dams for all check dam types shall comply with the typical profile section shown above.

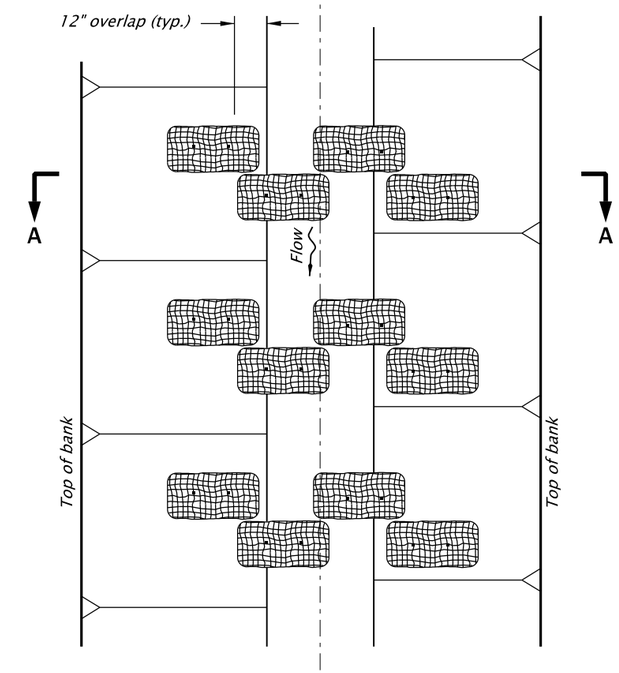

PLAN

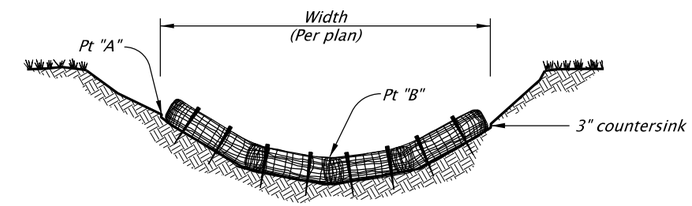

SECTION A-A

BIOFILTER BAG CHECK DAM - TYPE 3
NOT TO SCALE

CALC. BOOK NO. 6407

SDR DATE July, 2020

NOTE: All material and workmanship shall be in accordance with the current Oregon Standard Specifications

The selection and use of this Standard Drawing, while designed in accordance with generally accepted engineering principles and practices, is the sole responsibility of the user and should not be used without consulting a Registered Professional Engineer.

OREGON STANDARD DRAWINGS

CHECK DAMS TYPE 1, 3 AND 4

2021

DATE	REVISION DESCRIPTION

rd1005.dgn 07-01-2020

RD1005

Effective Date: December 1, 2020 - May 31, 2021

RD1005

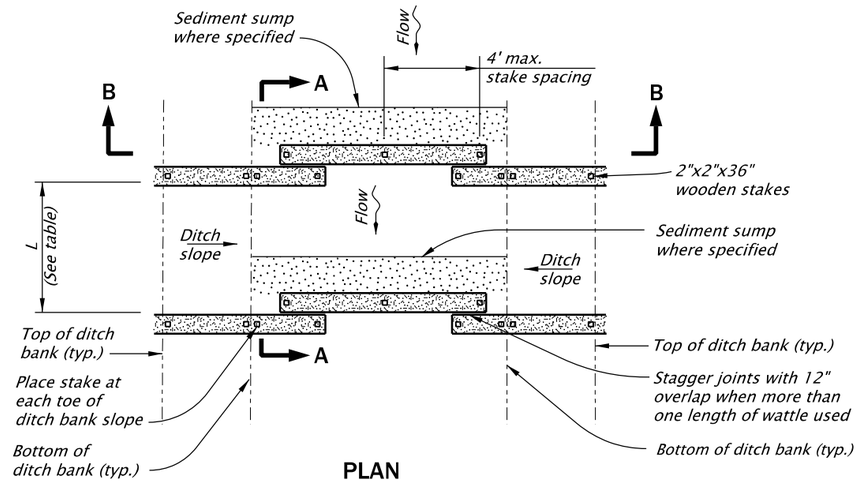

PLAN

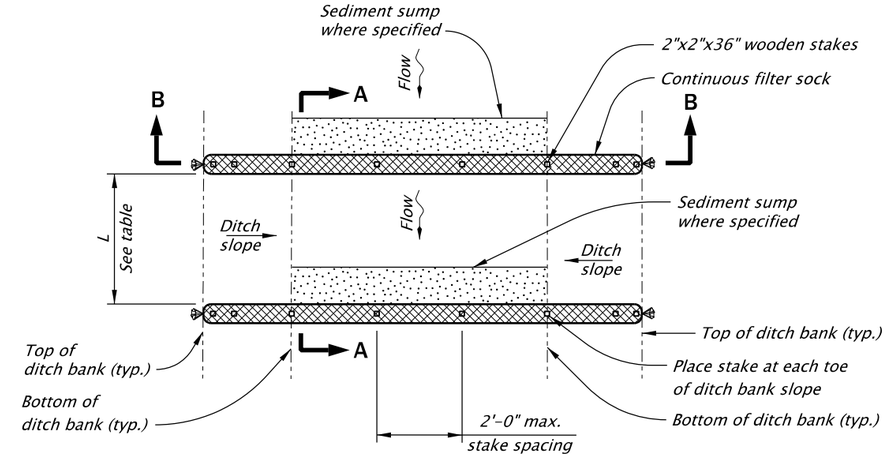

PLAN

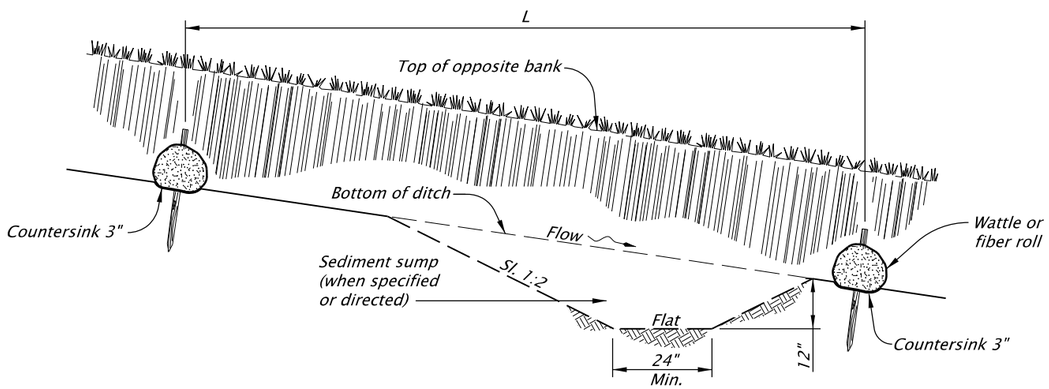

SECTION A-A

WATTLE / FIBER ROLL CHECK DAM - TYPE 2

NOT TO SCALE

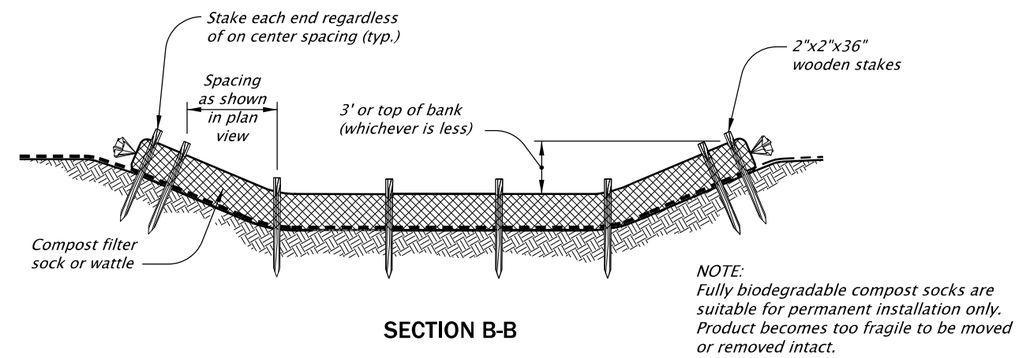

SECTION B-B

COMPOST FILTER SOCK CHECK DAM - TYPE 6

NOT TO SCALE

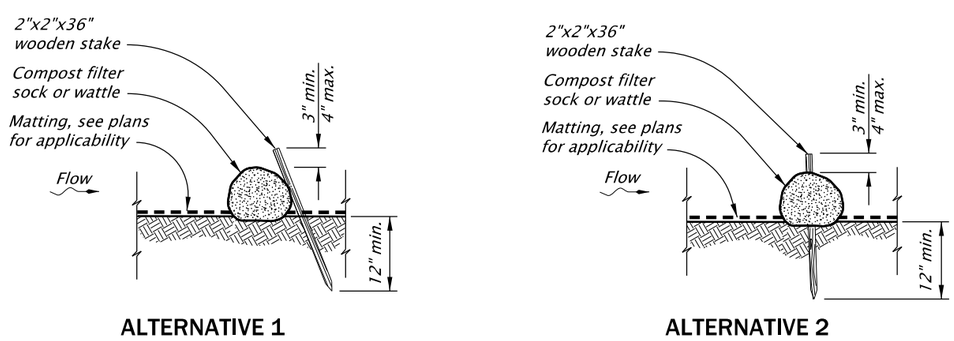

ALTERNATIVE 1

ALTERNATIVE 2

FIBER ROLL AND COMPOST SOCK STAKING ALTERNATIVES

NOT TO SCALE

MAXIMUM CHECK DAM SPACING "L"

Ditch Grade	H=8"	H=12"	H=18"	H=24"
10%	* *	* *	15'	20'
9%	* *	* *	16'	22'
8%	* *	* *	18'	25'
7%	* *	* *	21'	28'
6%	* *	16'	25'	33'
5%	* *	20'	30'	40'
4%	16'	25'	37'	50'
3%	22'	33'	50'	66'
2%	33'	50'	75'	100'

* * Not allowed H = Min. dam height

The selection and use of this Standard Drawing, while designed in accordance with generally accepted engineering principles and practices, is the sole responsibility of the user and should not be used without consulting a Registered Professional Engineer.

CALC. BOOK NO. 6402, 6406, 6407

SDR DATE July, 2020

NOTE: All material and workmanship shall be in accordance with the current Oregon Standard Specifications

OREGON STANDARD DRAWINGS

CHECK DAMS TYPE 2 AND 6

2021

DATE	REVISION DESCRIPTION

rd1006.dgn 07-01-2020

RD1006

Effective Date: December 1, 2020 - May 31, 2021

RD1006

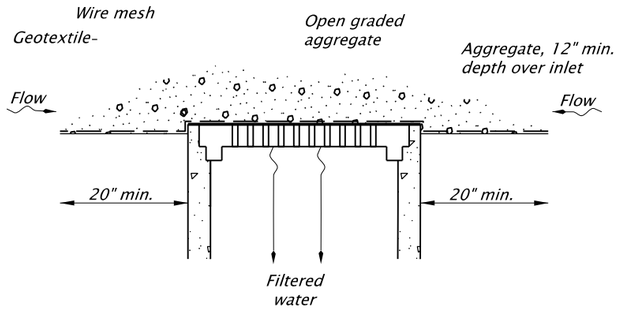

GEOTEXTILE/WIRE MESH/AGGREGATE - TYPE 2

NOT TO SCALE

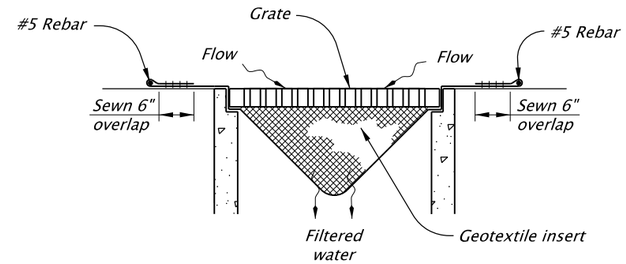

PREFABRICATED FILTER INSERT - TYPE 3

NOT TO SCALE

NOTE:
Install sod around the perimeter of inlets within 36 hours of harvest of the sod

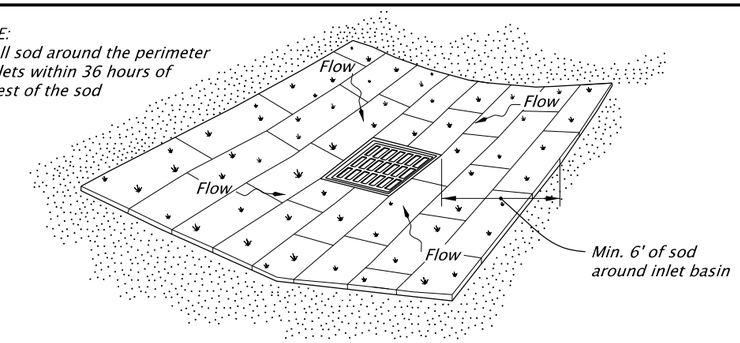

SOD PROTECTION - TYPE 6

NOT TO SCALE

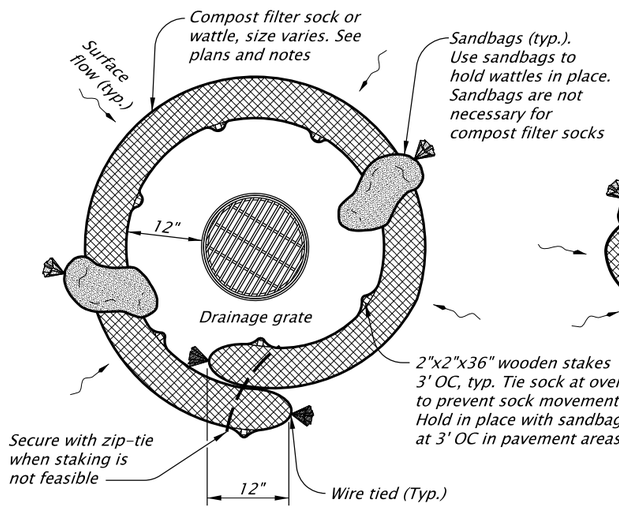

AREA DRAIN PLAN

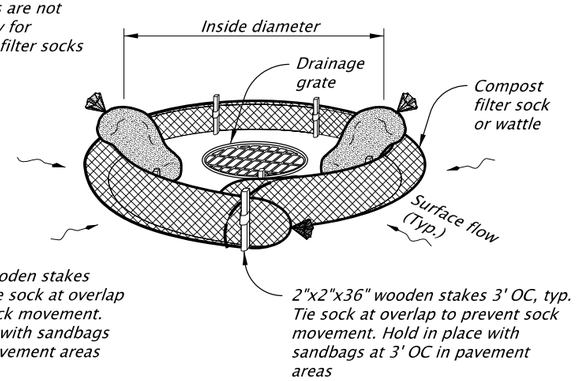

AREA DRAIN PERSPECTIVE VIEW

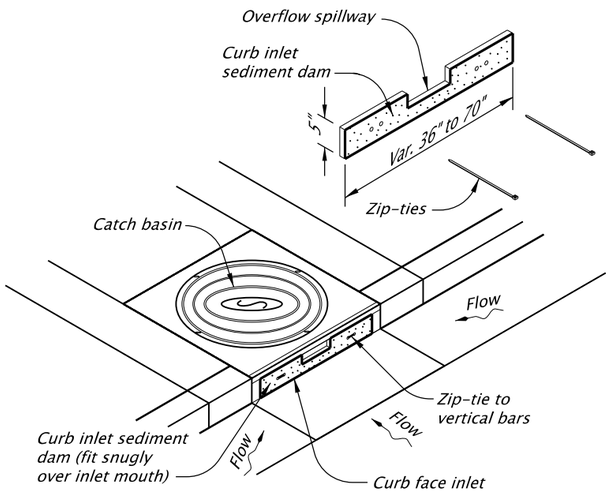

CURB INLET SEDIMENT DAM - TYPE 10

NOT TO SCALE

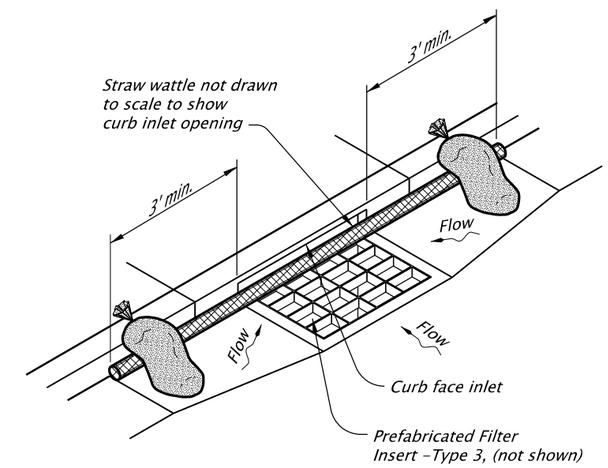

WATTLE BARRIER WITH FILTER INSERT - TYPE 11

NOT TO SCALE

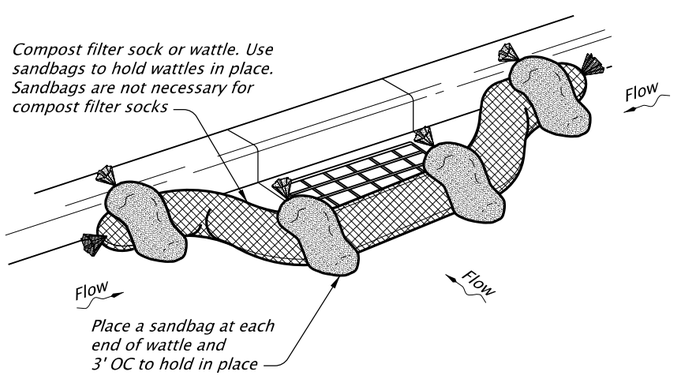

CURB INLET PERSPECTIVE VIEW

COMPOST FILTER SOCK OR WATTLE - TYPE 7

NOT TO SCALE

NOTES:
Type 2 - Geotextile/wire mesh/aggregate
Place the wire mesh over the grate.
Place sediment fence geotextile over the wire mesh and perimeter area around structure.
Install aggregate over the geotextile fabric.

Type 3 - Prefabricated filter inserts
Install prefabricated filter inserts according to the plans, special provisions, and manufacturer recommendations.
Prefabricated inserts with provisions for overflow are allowed only when accompanied by additional BMP's to prevent the potential of sediments entering project storm systems.
Field fabricated inserts are not allowed.

Type 7 - Compost filter sock
Drive 2"x2" wood stakes a minimum of 6" into ground and flush with the top of the sock.
Overlap ends of sock per manufacturers recommendations (12"min., 36" max.).
Use 8" to 12" dia sock on curbside in traffic areas.

(Type 7 cont.)
Use 12" to 18" dia sock in non-traffic areas or areas where the larger socks can be used safely.
use synthetic mesh socks for temporary installations.

Type 10 - Curb inlet sediment dam
Fit curb inlet sediment dam snugly into inlet mouth. Curb inlet sediment dam is required for use with inlet filter insert where at-grade inlet grate and curb inlet are combined at a catch basin.

Type 11 - Wattle barrier with filter insert
Install prefabricated filter insert per Type 3 detail.
Install wattles over opening and 36" to each side of opening tight against curb. Adjust wattle to force storm water to flow through filter insert or wattle prior to leaving the site.
Adjust, replace or modify the inlet protection as needed to prevent sediment laden water from entering the catch basin.

CALC. BOOK NO. 6402, 6406, 6407

SDR DATE July, 2020

NOTE: All material and workmanship shall be in accordance with the current Oregon Standard Specifications

The selection and use of this Standard Drawing, while designed in accordance with generally accepted engineering principles and practices, is the sole responsibility of the user and should not be used without consulting a Registered Professional Engineer.

OREGON STANDARD DRAWINGS

INLET PROTECTION
TYPE 2, 3, 6, 7, 10 AND 11

2021

DATE	REVISION DESCRIPTION

rd1010.dgn 07-01-2020

RD1010

Effective Date: December 1, 2020 - May 31, 2021

RD1010

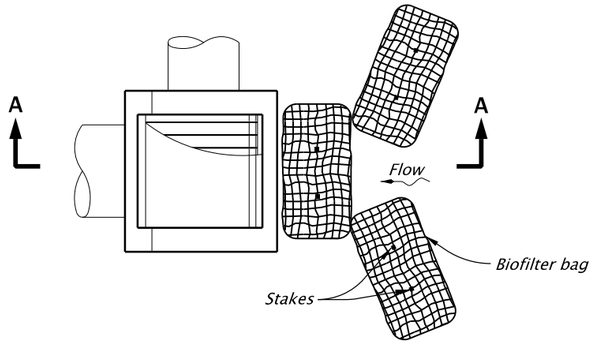

PLAN
DITCH INLET

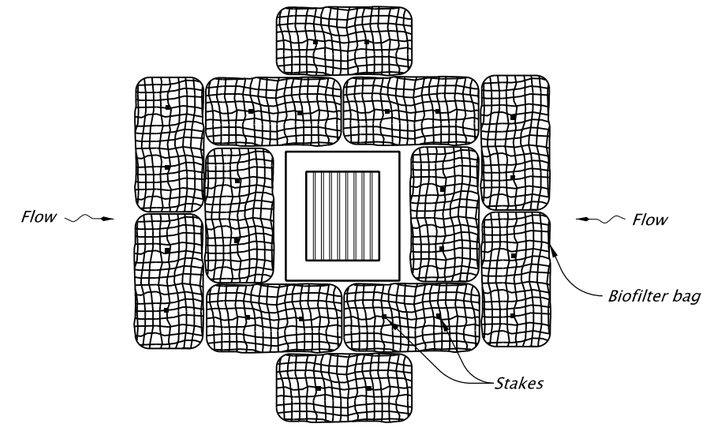

PLAN
AREA DRAIN

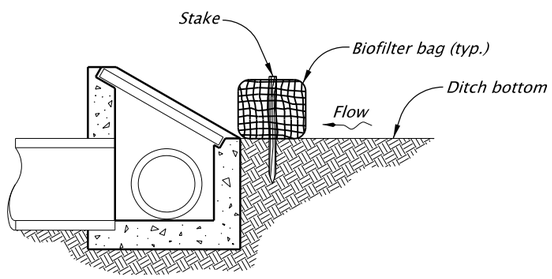

SECTION A-A
DITCH INLET

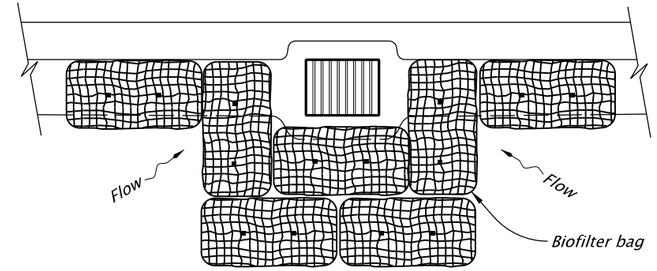

PLAN
CATCH BASIN

BIOFILTER BAGS - TYPE 4

NOT TO SCALE

NOTES:

1. Stake biofilter bags with 2"x2"x36" wood stakes, and use a minimum 2 stakes per bag. Drive stakes a minimum of 6" into the ground and flush with the top of the bags.
2. Omit stakes when bags are placed on pavement surface.
3. Overlap all bag joints 6".
4. Biofilter bags used on active roadways are easily displaced and made ineffective if struck by vehicles. If struck by a cyclist, falls with injury could result. On active roadways alternative inlet protection should be considered.

CALC. BOOK NO. 6402, 6406, 6407

SDR DATE July, 2020

NOTE: All material and workmanship shall be in accordance with the current Oregon Standard Specifications

The selection and use of this Standard Drawing, while designed in accordance with generally accepted engineering principles and practices, is the sole responsibility of the user and should not be used without consulting a Registered Professional Engineer.

OREGON STANDARD DRAWINGS

INLET PROTECTION TYPE 4

2021

DATE	REVISION DESCRIPTION

rd1015.dgn 07-01-2020

RD1015

Effective Date: December 1, 2020 - May 31, 2021

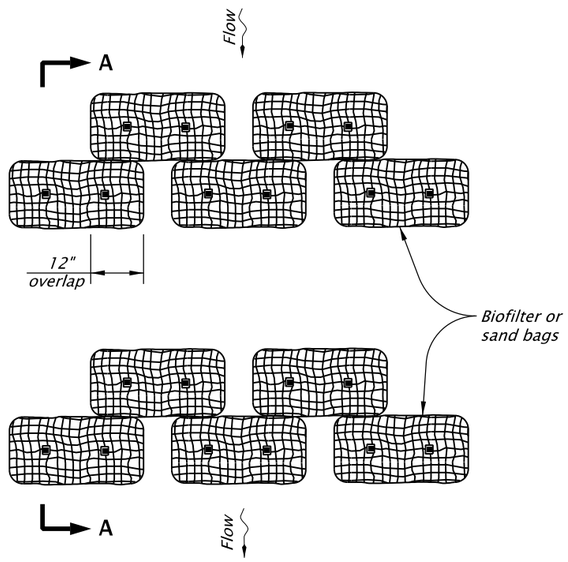

PLAN

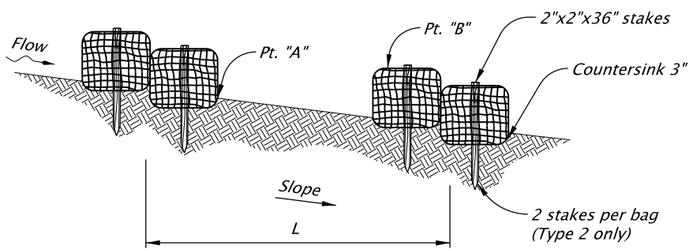

SECTION A-A

BIOFILTER BAG / SAND BAG BARRIER - TYPE 2 AND 4

NOT TO SCALE

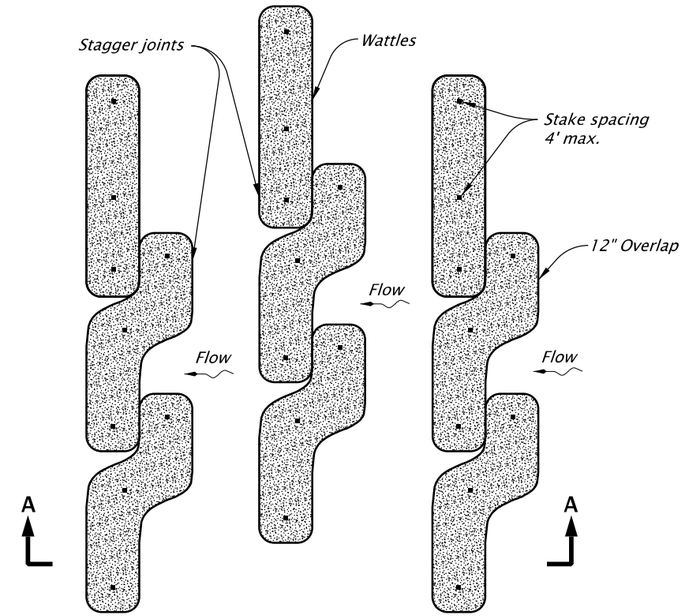

PLAN

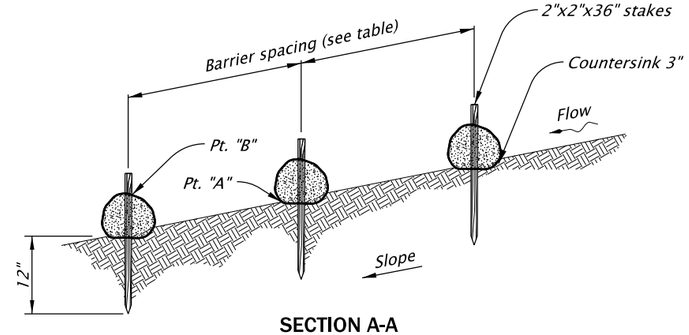

SECTION A-A

FIBER ROLL BARRIER - TYPE 3

NOT TO SCALE

NOTES:

1. *For Type 2 barrier, drive stakes flush with top of bag and into undisturbed ground a min. of 12". Omit stakes if bags are placed on paved surface.*

2. *For Type 2 and Type 4 barriers, space bags (L) so that the elevation of point "A" is less than or equal to the elevation of point "B".*

Type 2 - Biofilter bags
Type 3 - Wattles
Type 4 - Sand bags

BARRIER SPACING		
INSTALL PARALLEL ALONG CONTOURS AS FOLLOWS		
% SLOPE	% SLOPE	MAXIMUM SPACING ON SLOPE
10% Flatter	1:10 or Flatter	300'
10 > % ≥ 15	10 > X ≥ 7.5	150'
15 > % ≥ 20	7.5 > X ≥ 5	100'
20 > % ≥ 30	5 > X ≥ 3	50'
Steeper than 30%	Steeper than 1:3	25'

CALC. BOOK NO. 6402, 6406, 6407

SDR DATE July, 2020

NOTE: All material and workmanship shall be in accordance with the current Oregon Standard Specifications

The selection and use of this Standard Drawing, while designed in accordance with generally accepted engineering principles and practices, is the sole responsibility of the user and should not be used without consulting a Registered Professional Engineer.

OREGON STANDARD DRAWINGS

SEDIMENT BARRIER TYPE 2, 3 AND 4

2021

DATE	REVISION DESCRIPTION

rd1030.dgn 07-01-2020

RD1030

Effective Date: December 1, 2020 - May 31, 2021

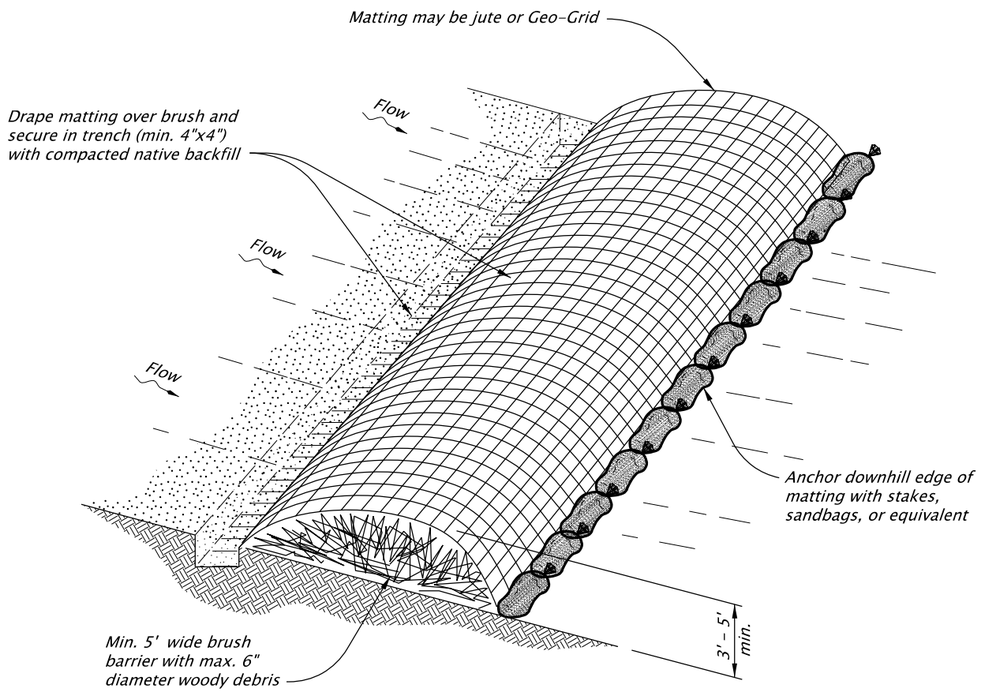

BRUSH BARRIER - TYPE 5

NOT TO SCALE

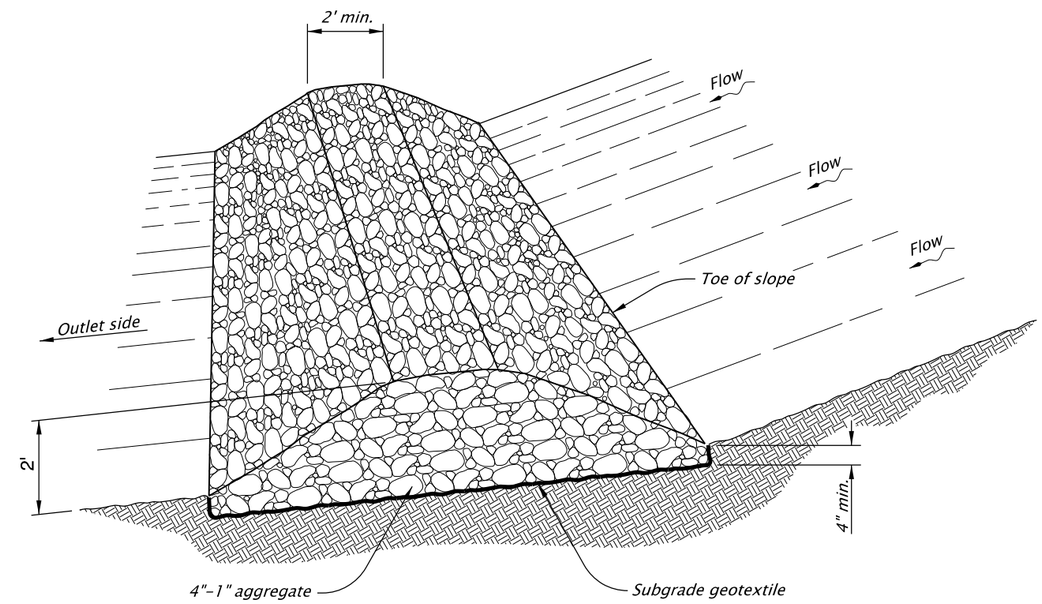

AGGREGATE BARRIER - TYPE 6

NOT TO SCALE

NOTES:

1. *Direct diverted flows from the outlet side of the rock filter berm/dams onto a stabilized area, such as vegetation and or rock, or into a sediment trapping facility.*
2. *Embed barrier a min. of 4" into the existing ground/embankments.*
3. *Use 1:3 or flatter side slope. Within the safety clear zone, use 1:6 or flatter side slopes.*
4. *Use 4"-1" clean aggregate.*

CALC. BOOK NO. 6403, 6404, 6405

SDR DATE July, 2020

NOTE: All material and workmanship shall be in accordance with the current Oregon Standard Specifications

The selection and use of this Standard Drawing, while designed in accordance with generally accepted engineering principles and practices, is the sole responsibility of the user and should not be used without consulting a Registered Professional Engineer.

OREGON STANDARD DRAWINGS

SEDIMENT BARRIER TYPE 5 AND 6

2021

DATE	REVISION DESCRIPTION

rd1031.dgn 07-01-2020

RD1031

Effective Date: December 1, 2020 - May 31, 2021

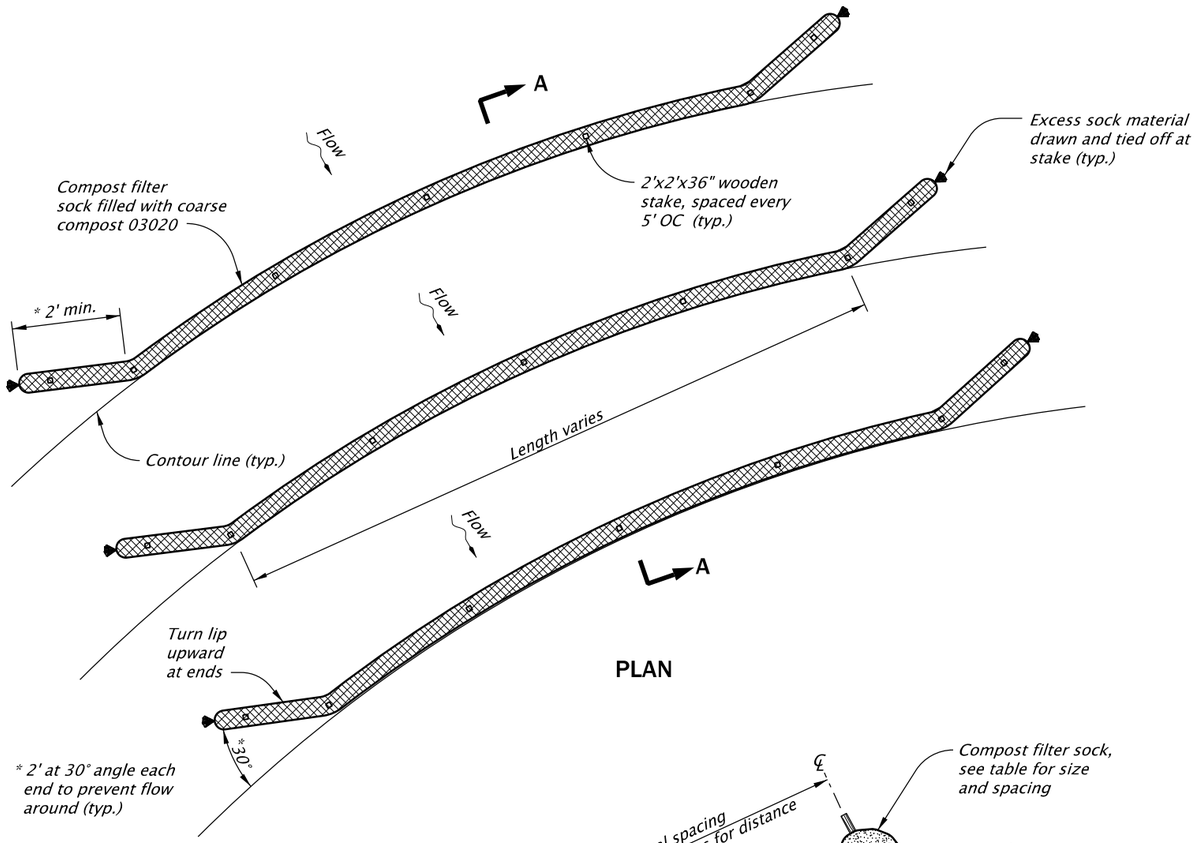

PLAN

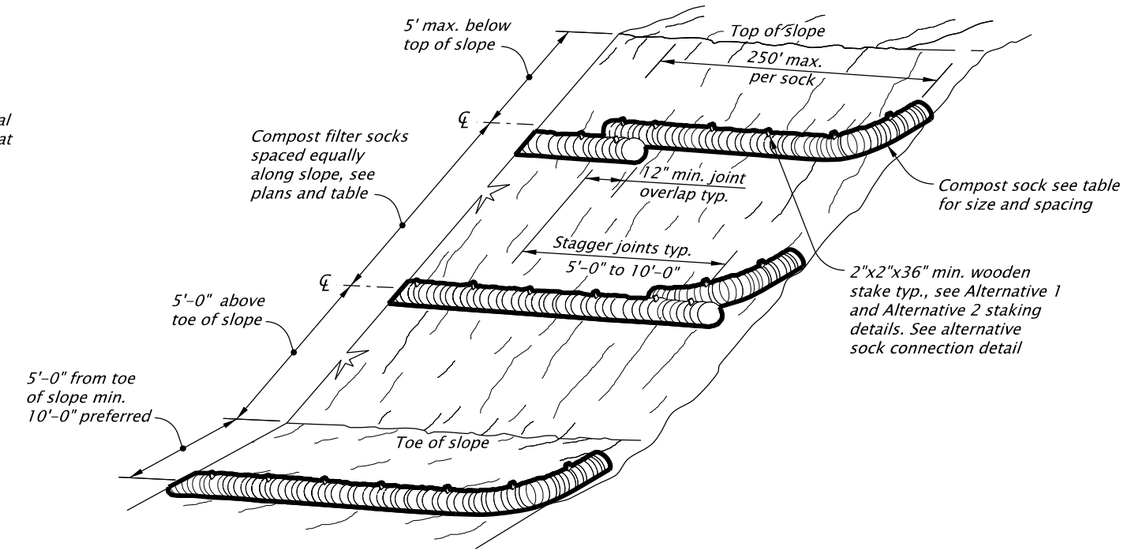

SLOPE APPLICATION - PERSPECTIVE VIEW

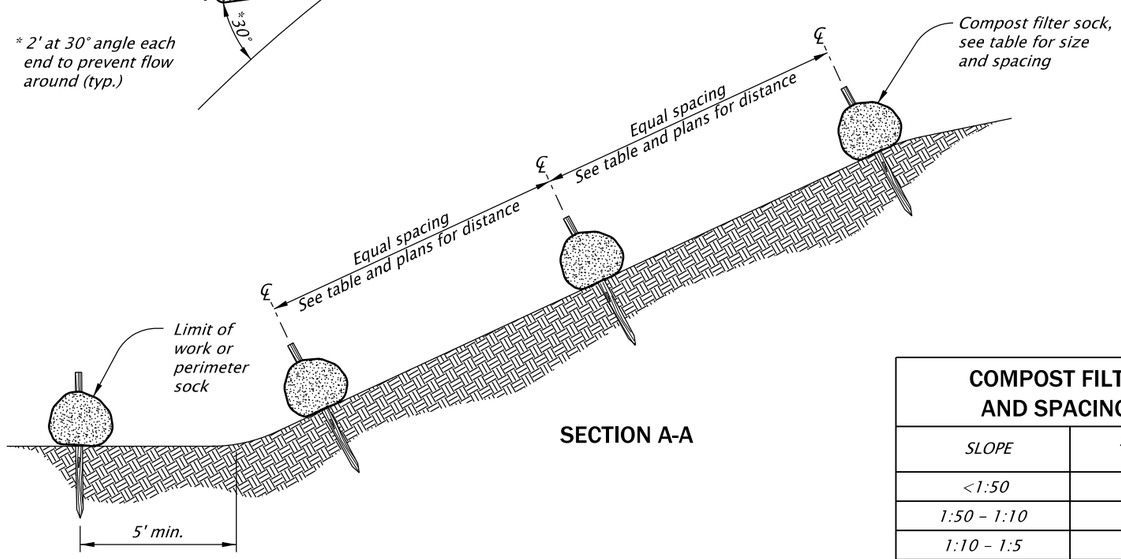

SECTION A-A

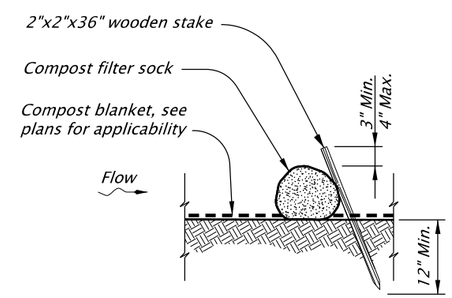

ALTERNATIVE 1 (Staking)

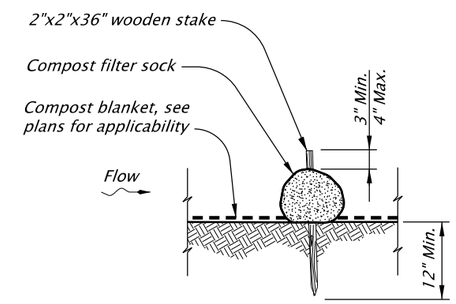

ALTERNATIVE 2 (Staking)

NOTE:
Fully biodegradable compost sock mesh is recommended for permanent installations. Where compost socks must be moved or removed, synthetic sock mesh should be used.

COMPOST FILTER SOCK DIAMETER AND SPACING BASED ON SLOPE

SLOPE	SPACING (ft)	DIAMETER (in)
<1:50	250	8
1:50 - 1:10	125	12
1:10 - 1:5	100	12
1:5 - 1:2	50	18
>1:2	25	18

COMPOST FILTER SOCK

NOT TO SCALE

CALC. BOOK NO. 6403, 6404, 6405

SDR DATE July, 2020

NOTE: All material and workmanship shall be in accordance with the current Oregon Standard Specifications

The selection and use of this Standard Drawing, while designed in accordance with generally accepted engineering principles and practices, is the sole responsibility of the user and should not be used without consulting a Registered Professional Engineer.

OREGON STANDARD DRAWINGS

SEDIMENT BARRIER TYPE 8

2021

DATE	REVISION DESCRIPTION

rd1032.dgn 07-01-2020

RD1032

Effective Date: December 1, 2020 - May 31, 2021

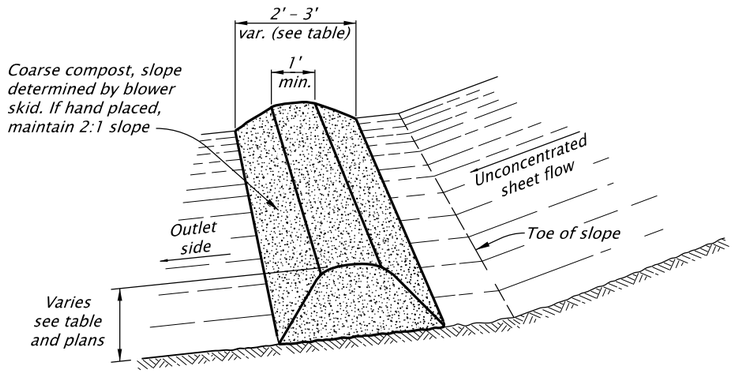

COMPOST FILTER BERM - TYPE 9

NOT TO SCALE

COMPOST FILTER BERM DIMENSIONS AND SPACING BASED ON SLOPE				
SLOPE	BERM SPACING	BERM DIMENSIONS		
		HEIGHT	BOTTOM WIDTH	TOP WIDTH
> 50:1	250 ft	1 ft	2 ft (min.)	1 ft
50:1 - 10:1	125 ft	1 ft	2 ft (min.)	1 ft
10:1 - 5:1	100 ft	1 ft	2 ft (min.)	1 ft
3:1 - 2:1	50 ft	1.3 ft	2.6 ft (min.)	1 ft
> 2:1		1.5 ft	3 ft (min.)	1 ft

NOTES:

1. Compost filter berm's are sediment control devices for areas where runoff occurs as sheet flow. See Section 00280, Oregon Standard Specifications.
2. The maximum drainage area for a continuous berm shall be 1/4 acre per 100 linear feet of filter berm.
3. Where possible, berm's should be placed away from the toe of slopes a minimum of 5 feet (10 feet preferred) to allow for energy dissipation and sediment storage.
4. Direct the outlet side of filter berm, located at base of slope, onto a stabilized area, such as vegetation and/or aggregate.
5. Place filter berm's along or on the ground contour with the ends of the filter berm turned up slope. Adequate area shall be provided behind berm for ponding.
6. Compost filter berm's may be vegetated with temporary or permanent seeding after placement.
7. If placed in area with existing ground vegetation, cut vegetation to 2-4 inches above grade at berm footprint. Do not remove existing vegetation or cut back outside berm footprint unless directed by Agency.
8. If soils are exposed apply compost blanket per details and specifications.

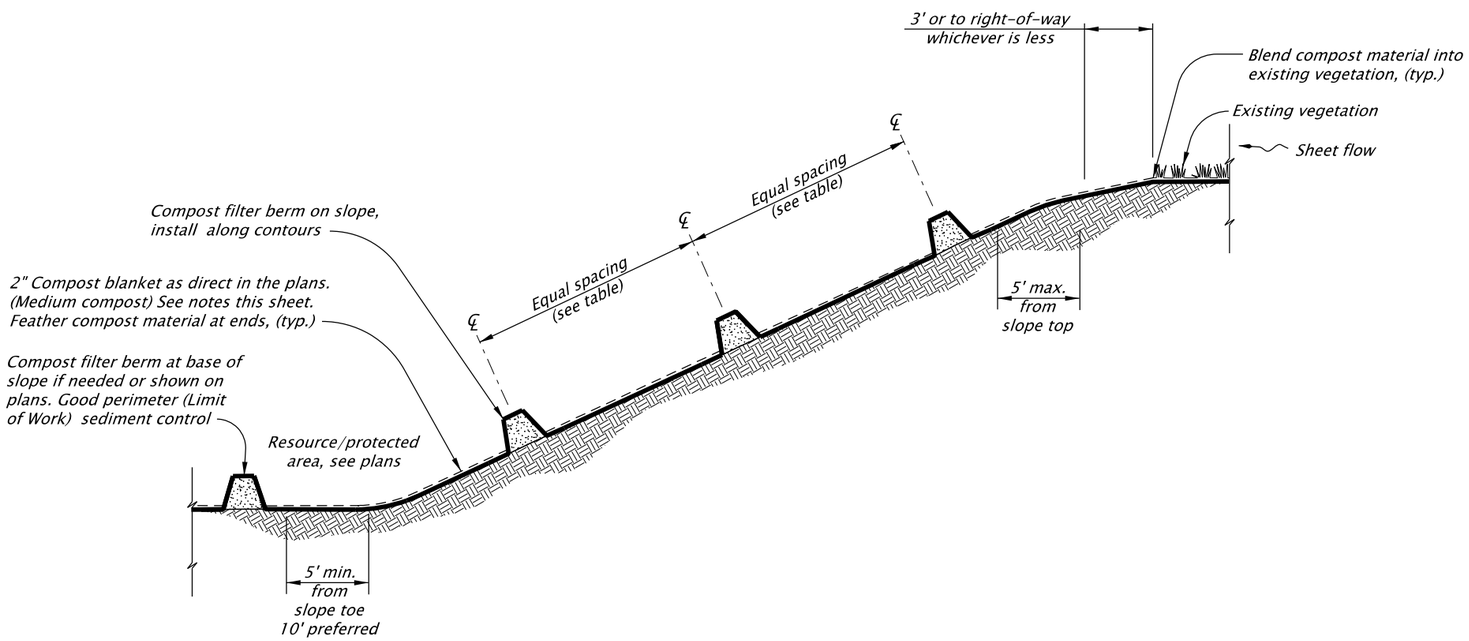

COMPOST FILTER BERM SERIES

NOT TO SCALE

CALC. BOOK NO. 6403, 6404, 6405

SDR DATE July, 2020

NOTE: All material and workmanship shall be in accordance with the current Oregon Standard Specifications

The selection and use of this Standard Drawing, while designed in accordance with generally accepted engineering principles and practices, is the sole responsibility of the user and should not be used without consulting a Registered Professional Engineer.

OREGON STANDARD DRAWINGS

SEDIMENT BARRIER TYPE 9

2021

DATE	REVISION DESCRIPTION

Effective Date: December 1, 2020 - May 31, 2021

RD1033

rd1033.dgn 07-01-2020

RD1033

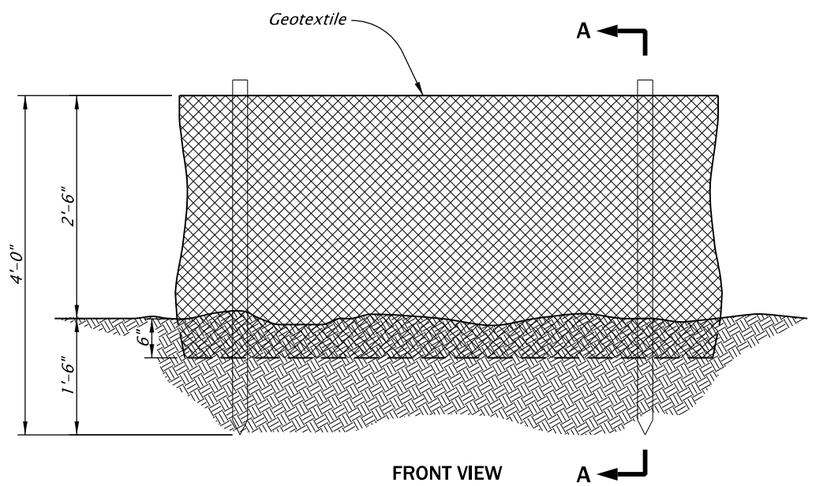

FRONT VIEW

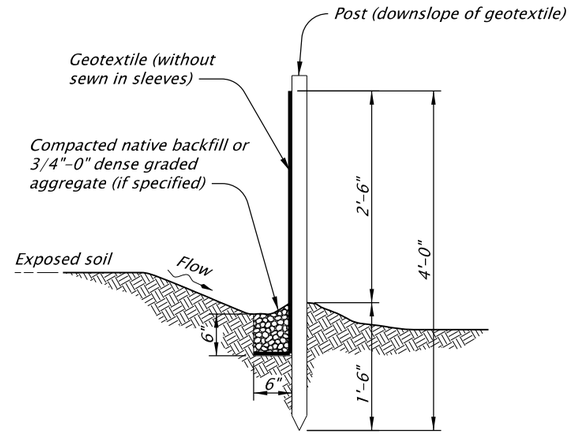

SECTION A-A

SEDIMENT FENCE AND GEOTEXTILE BURY DETAIL - TYPE 1

NOT TO SCALE

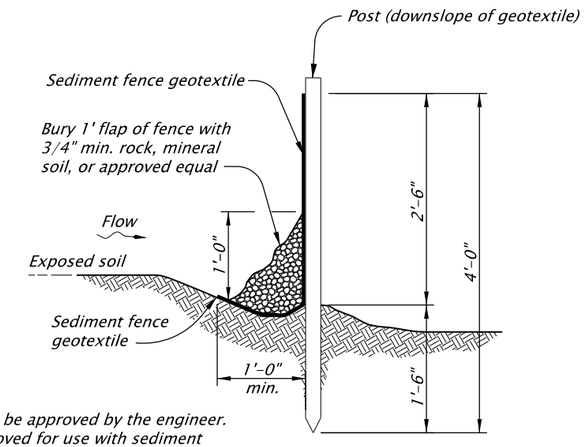

NOTES:
1. Use must be approved by the engineer.
2. Not approved for use with sediment fencing with sewn-in post sleeves.

ALTERNATE SEDIMENT FENCE WITHOUT TRENCHING - TYPE 2

NOT TO SCALE

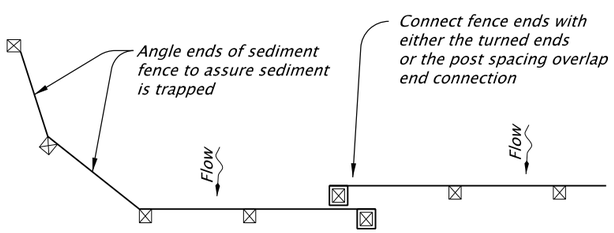

PLAN VIEW

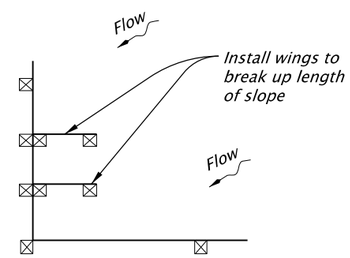

TERMINATION AT CORNER OR PROPERTY LINE

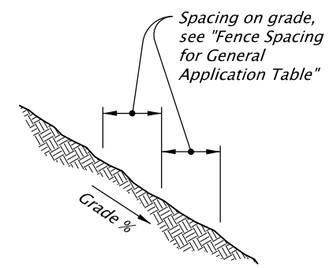

GENERAL NOTES:
1. Use 2"x2" wood fence posts.
2. Posts to be installed on downhill side of sediment fence geotextile. Position posts to prevent separation from geotextile.
3. Compact filter fabric trench backfill and soil on uphill side of fence.
4. Locate fence no closer than three feet to the toe of a slope.
5. Wing spacing shall comply with "Fence Spacing for General Application Table".

FENCE SPACING FOR GENERAL APPLICATION TABLE

INSTALL PARALLEL ALONG CONTOURS AS FOLLOWS	
GRADE	MAXIMUM SPACING ON GRADE
Grade < 10%	300'
10% ≤ Grade < 15%	150'
15% ≤ Grade < 20%	100'
20% ≤ Grade < 30%	50'
30% ≤ Grade	25'

POST SPACING TABLE

6'	Sediment Fence with Geotextile elongation less than 50%
4'	Sediment Fence with Geotextile elongation 50% or more

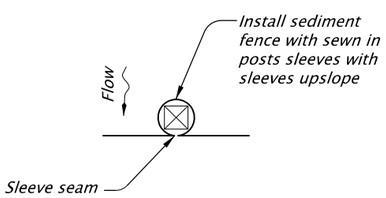

GEOTEXTILE WITH POST SLEEVES

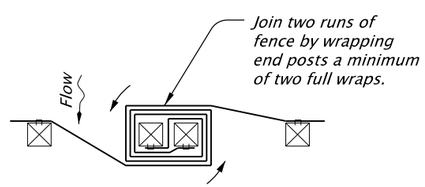

TURNED ENDS CONNECTION

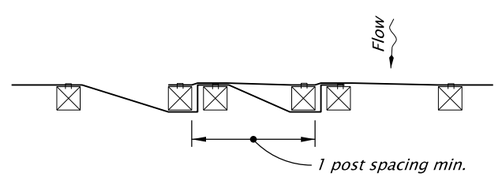

POST SPACING OVERLAP CONNECTION

GEOTEXTILE END CONNECTIONS

NOT TO SCALE

CALC. BOOK NO. 6403, 6404, 6405

SDR DATE July, 2020

NOTE: All material and workmanship shall be in accordance with the current Oregon Standard Specifications

The selection and use of this Standard Drawing, while designed in accordance with generally accepted engineering principles and practices, is the sole responsibility of the user and should not be used without consulting a Registered Professional Engineer.

OREGON STANDARD DRAWINGS

SEDIMENT FENCE

2021

DATE	REVISION DESCRIPTION

rd1040.dgn 07-01-2020

RD1040

Effective Date: December 1, 2020 - May 31, 2021

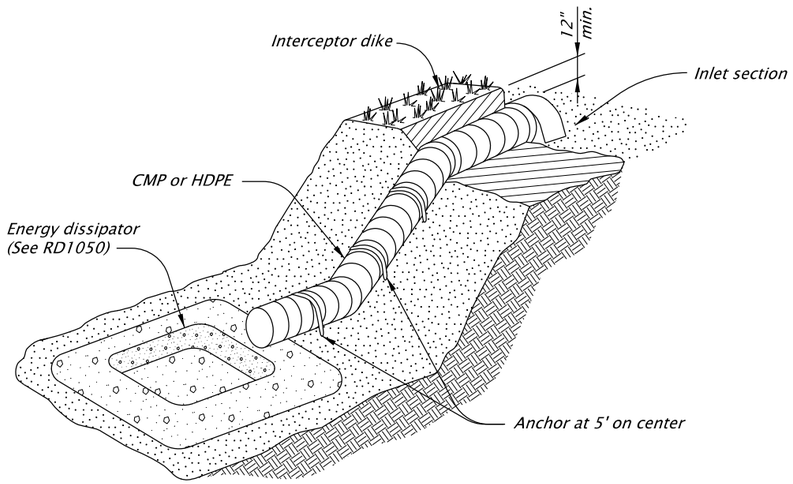

PERSPECTIVE

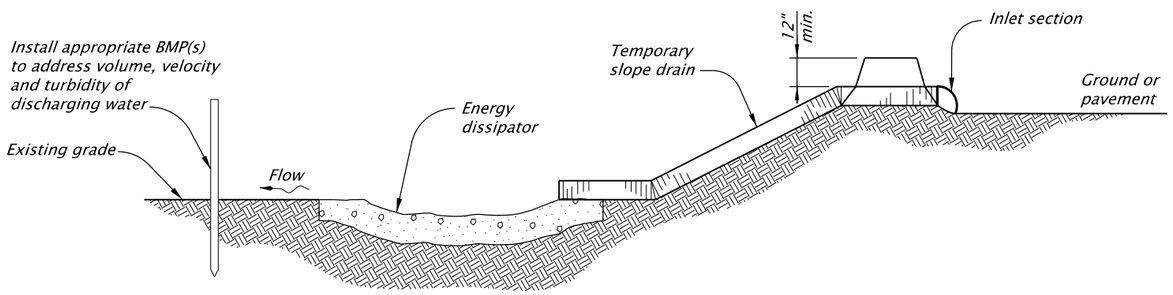

PROFILE

TEMPORARY SLOPE DRAIN
NOT TO SCALE

NOTES:

1. *Temporary slope drains shall be used at the top of fill slopes as the embankment is constructed to prevent erosion.*
2. *Temporary drainage curbs shall be used in conjunction with temporary slope drains to prevent erosion on completed slopes and to direct flow into end section.*
3. *All dimensions not indicated will be as directed.*

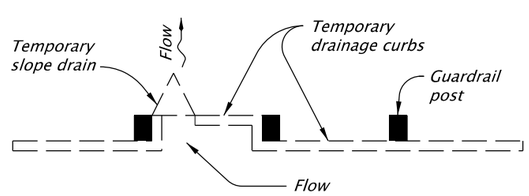

PLAN

TEMPORARY DRAIN AT GUARDRAIL
NOT TO SCALE

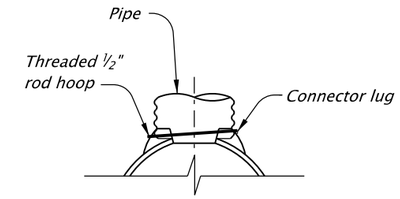

OPTION 1

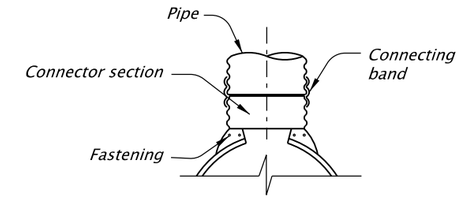

OPTION 2

CONNECTION DETAILS
NOT TO SCALE

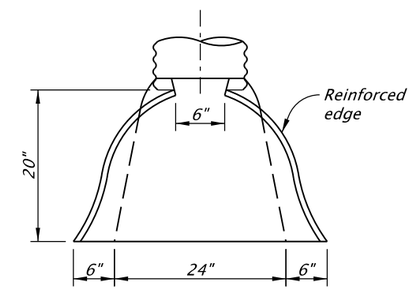

PLAN

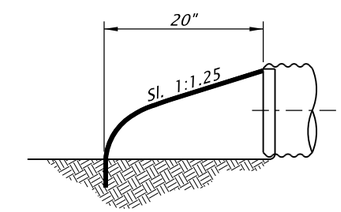

SIDE VIEW

PIPE SIZE TABLE		
PIPE		CONTRIBUTING AREA TO SLOPE DRAIN (sq ft)
Slope (min.)	D in. (min.)	
3.8%	6	A < 200
2.5%	8	200 ≤ A < 500
1.9%	10	500 ≤ A < 850
1.5%	12	850 ≤ A < 1400
–	special design reqd.	1400 ≤ A

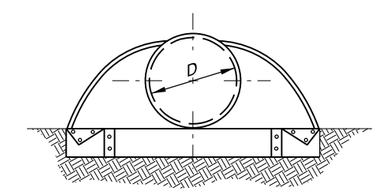

FRONT VIEW

INLET SECTION DETAILS
NOT TO SCALE

CALC. BOOK NO. 6403, 6404, 6405

SDR DATE July, 2020

NOTE: All material and workmanship shall be in accordance with the current Oregon Standard Specifications

The selection and use of this Standard Drawing, while designed in accordance with generally accepted engineering principles and practices, is the sole responsibility of the user and should not be used without consulting a Registered Professional Engineer.

OREGON STANDARD DRAWINGS

TEMPORARY SLOPE DRAIN WITH ENERGY DISSIPATOR

2021

DATE	REVISION DESCRIPTION

rd1045.dgn 07-01-2020

RD1045

Effective Date: December 1, 2020 - May 31, 2021

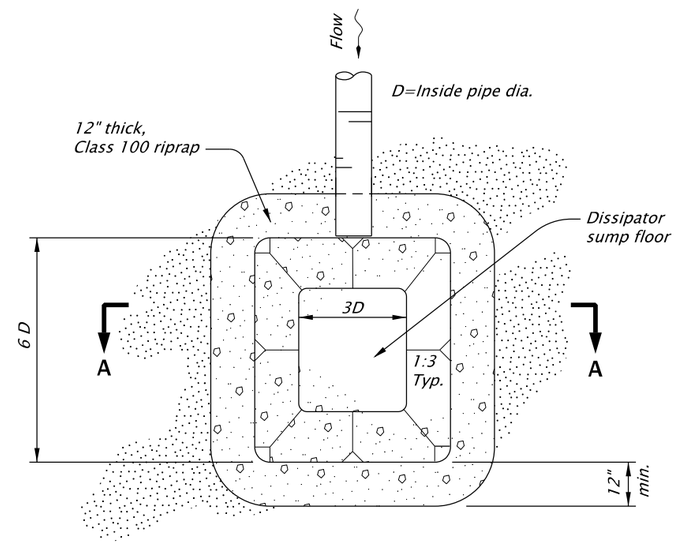

PLAN

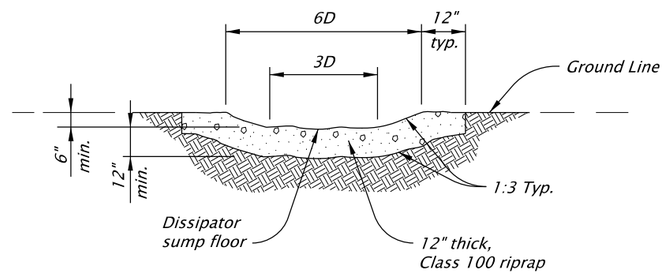

SECTION A-A

NOTES:

1. *All dimensions not indicated will be as directed.*
2. *Install level spreader, sediment barrier(s), check dam(s) or other appropriate BMP(s) to address volume, velocity and turbidity of discharge water.*

TEMPORARY SCOUR BASIN / ENERGY DISSIPATOR

NOT TO SCALE

CALC. BOOK NO. 6403, 6404, 6405

SDR DATE July, 2020

NOTE: All material and workmanship shall be in accordance with the current Oregon Standard Specifications

The selection and use of this Standard Drawing, while designed in accordance with generally accepted engineering principles and practices, is the sole responsibility of the user and should not be used without consulting a Registered Professional Engineer.

OREGON STANDARD DRAWINGS

TEMPORARY SCOUR BASIN / ENERGY DISSIPATOR

2021

DATE	REVISION DESCRIPTION

rd1050.dgn 07-01-2020

RD1050

Effective Date: December 1, 2020 - May 31, 2021

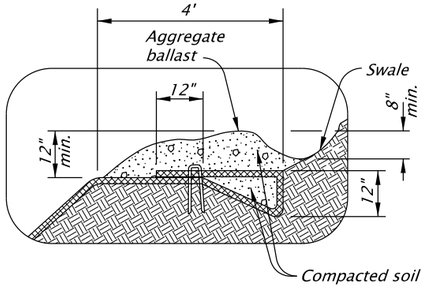

FIGURE A1:
TOP OF BANK ANCHOR TRENCH, H>3' AND TERMINAL SLOPE
NOT TO SCALE

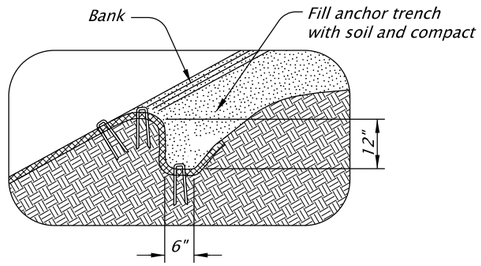

FIGURE A2:
TOP OF BANK ANCHOR TRENCH, H<3'
NOT TO SCALE

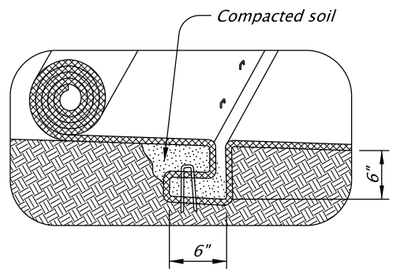

FIGURE A3:
CHANNEL CHECK SLOT
NOT TO SCALE

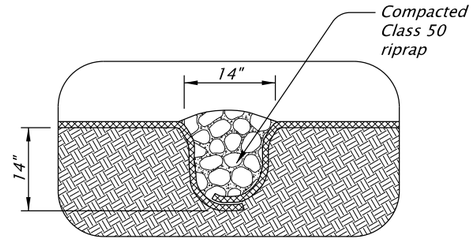

FIGURE A4:
CHANNEL CHECK SLOT WITH ROCK BACKFILL
NOT TO SCALE

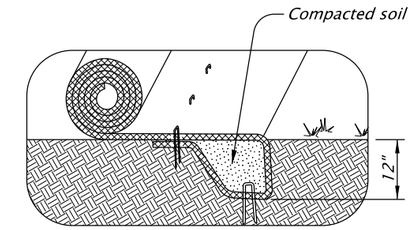

FIGURE A5:
INITIAL CHANNEL ANCHOR TRENCH
NOT TO SCALE

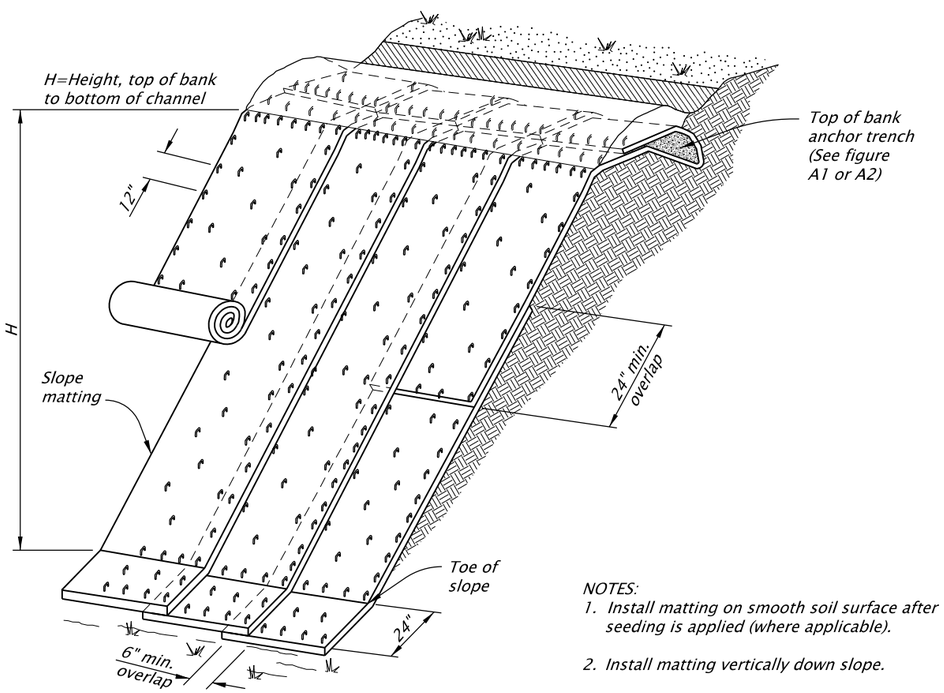

SLOPE MATTING ISOMETRIC VIEW
NOT TO SCALE

NOTES:
1. Install matting on smooth soil surface after seeding is applied (where applicable).
2. Install matting vertically down slope.
3. Install matting so edge overlaps are shingled away from prevailing winds.
4. Place fastener at 12" OC on matting edges
5. Overlap upper mat over lower mat, and fasten.
6. Stagger alternate rows of fasteners placed at 24" OC
7. Extend mat 24" beyond toe of slope; fold mat back under 4" and fasten.
8. Matting Types A through E: Furnish fully biodegradable product. Matting with plastic or photodegradable components will not be accepted.

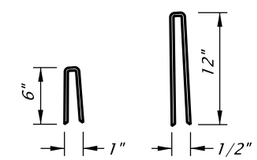

STAPLES
NOT TO SCALE

NOTES:
1. Install matting on smooth soil surface after seeding is applied (where applicable).
2. Install channel liner matting, in the direction of water flow. Anchor upstream end of mat with check slot for culvert outfalls, place mat under pipe 12" minimum upstream from pipe outlet.
3. Construct check slots across channel bottom at 25' spacing and at the end of each mat (Fig. A3 or A4).
4. Overlap side channel liner matting edges 6" over the center channel liner matting and fasten edges 12" OC Continue overlap and stapling pattern for each additional side channel liner mat.
5. Lap upstream matting end 12" over beginning edge of downstream matting. Fasten 12" OC
6. Anchor top edge of side channel matting in trench and fasten 12" OC (Fig. A2).
7. Fasten matting interior at 24" OC with staggered spacing.
8. Construct initial anchor trench at downstream end of matting and terminal slope anchor at upstream end.
9. Matting Types A through E: Furnish fully biodegradable product. Matting with plastic or photodegradable components will not be accepted.

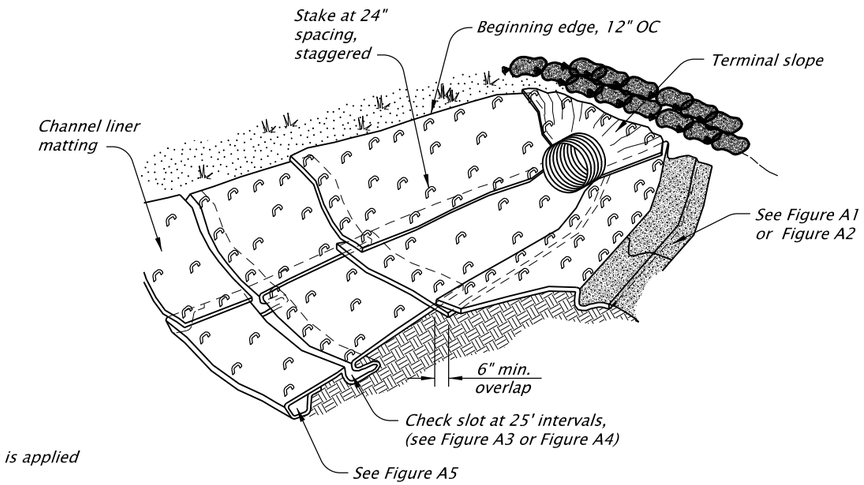

CHANNEL MATTING ISOMETRIC VIEW
NOT TO SCALE

CALC. BOOK NO. 6403, 6404, 6405

SDR DATE July, 2020

NOTE: All material and workmanship shall be in accordance with the current Oregon Standard Specifications

The selection and use of this Standard Drawing, while designed in accordance with generally accepted engineering principles and practices, is the sole responsibility of the user and should not be used without consulting a Registered Professional Engineer.

OREGON STANDARD DRAWINGS

SLOPE AND CHANNEL MATTING

2021

DATE	REVISION DESCRIPTION

rd1055.dgn 07-01-2020

RD1055

Effective Date: December 1, 2020 - May 31, 2021

RD1055

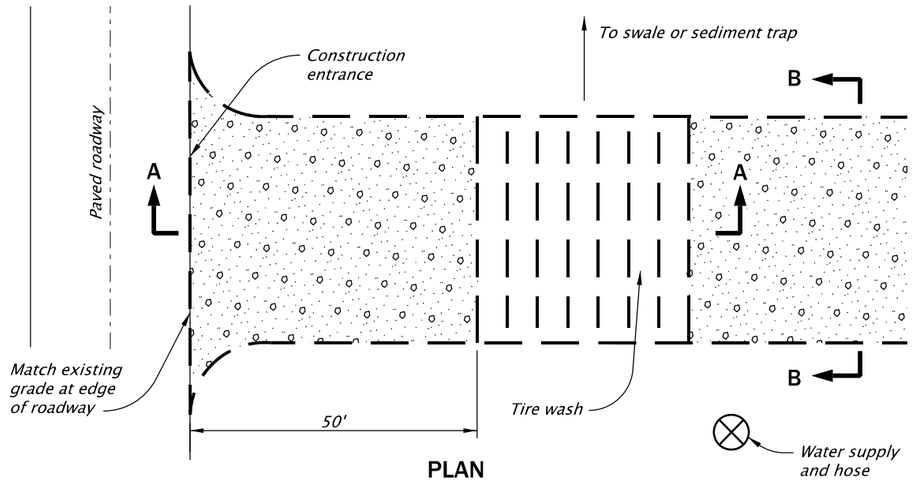

PLAN

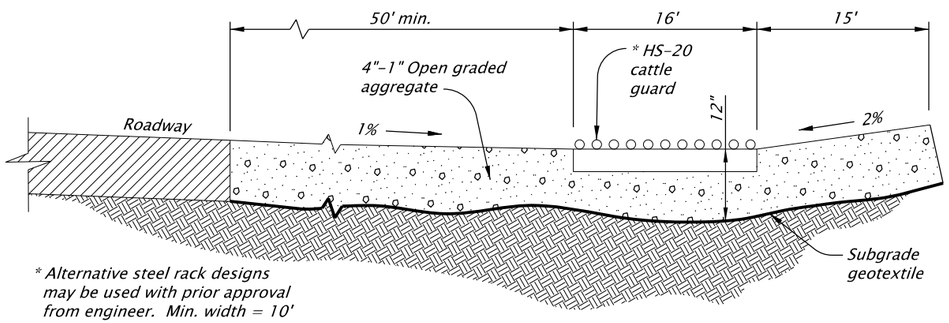

SECTION A-A

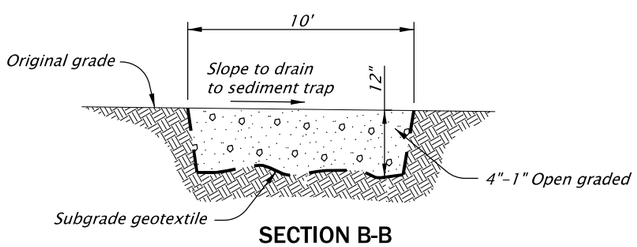

SECTION B-B

TIRE WASH - TYPE 1 (MANUAL HOSE WASH)

NOT TO SCALE

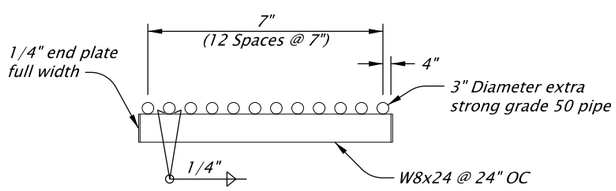

HS-20 CATTLE GUARD

NOT TO SCALE

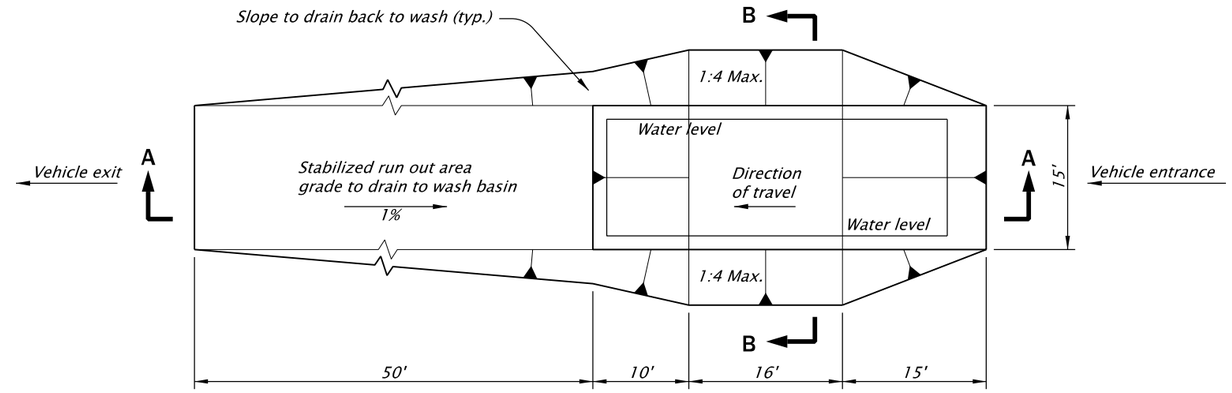

PLAN

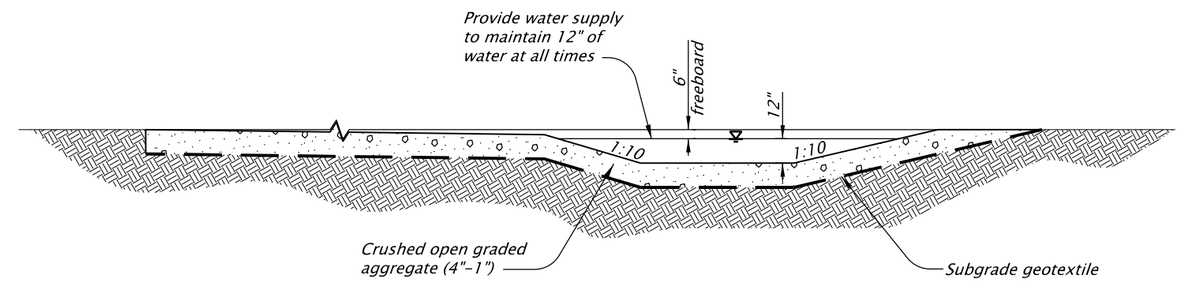

SECTION A-A

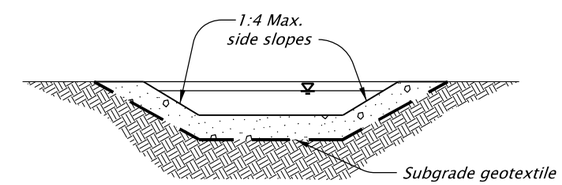

SECTION B-B

TIRE WASH - TYPE 2

NOT TO SCALE

CALC. BOOK NO. 6403, 6404, 6405

SDR DATE July, 2020

NOTE: All material and workmanship shall be in accordance with the current Oregon Standard Specifications

The selection and use of this Standard Drawing, while designed in accordance with generally accepted engineering principles and practices, is the sole responsibility of the user and should not be used without consulting a Registered Professional Engineer.

OREGON STANDARD DRAWINGS

TIRE WASH FACILITY TYPE 1 AND 2

2021

DATE	REVISION DESCRIPTION

rd1060.dgn 07-01-2020

RD1060

Effective Date: December 1, 2020 - May 31, 2021

rd1065.dgn 07-01-2020

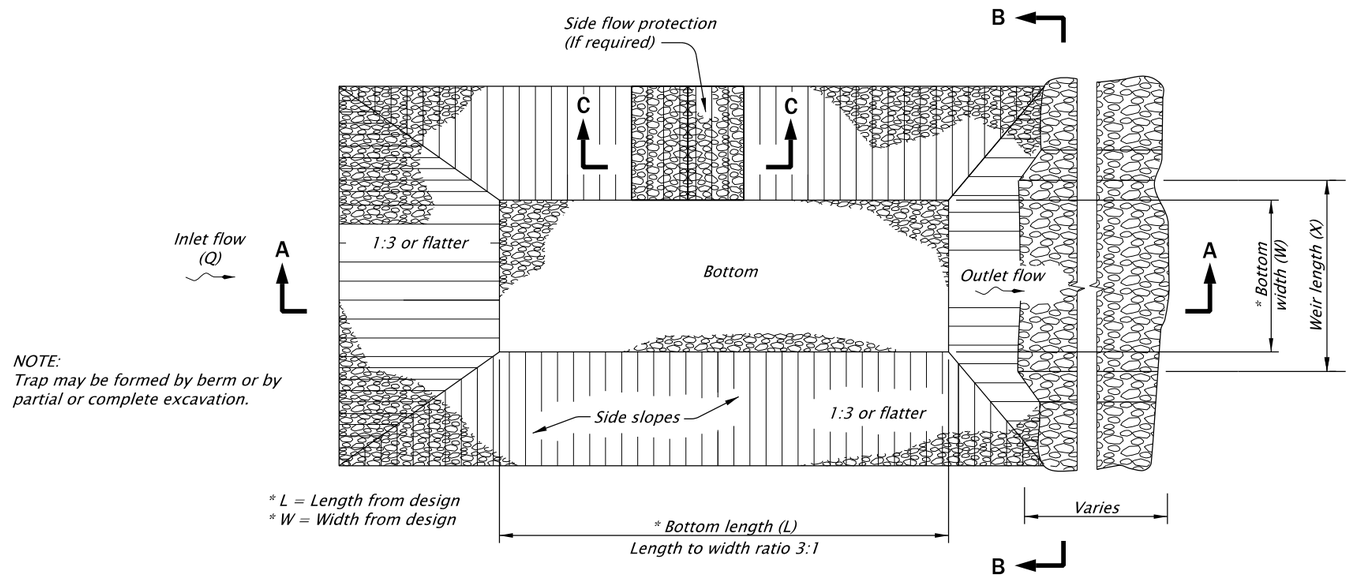

PLAN

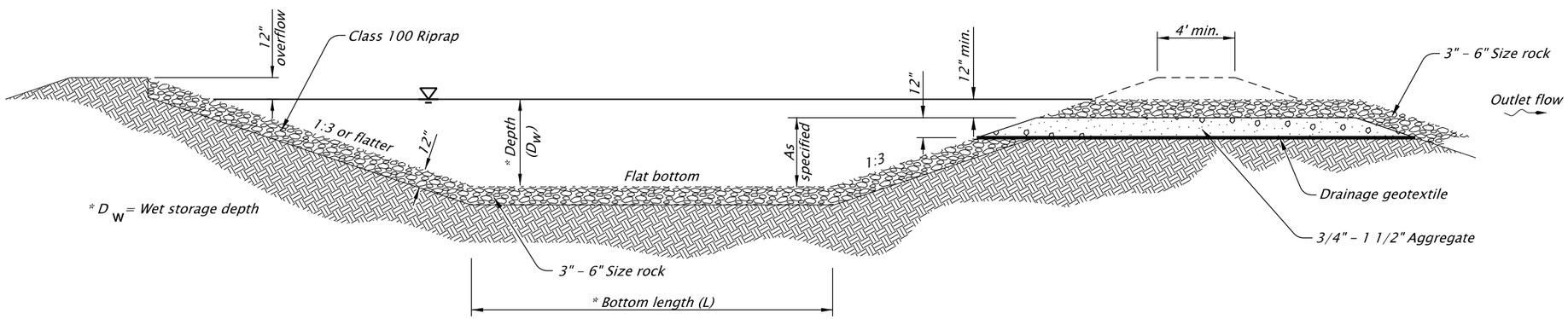

SECTION A-A

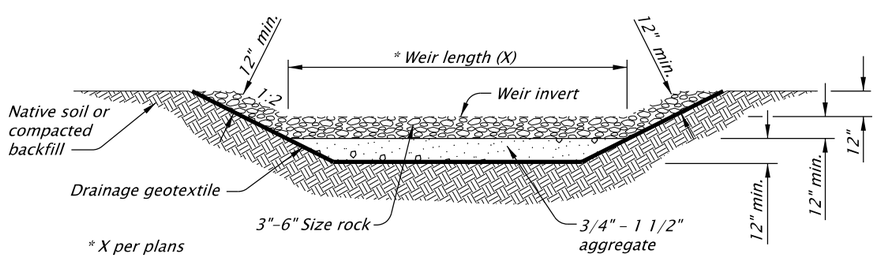

SECTION B-B

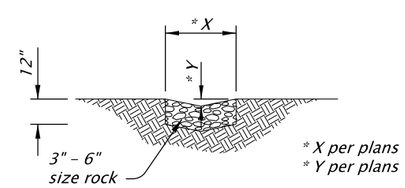

SECTION C-C

SEDIMENT TRAP

NOT TO SCALE

CALC. BOOK NO. 6403, 6404, 6405	SDR DATE July, 2020
The selection and use of this Standard Drawing, while designed in accordance with generally accepted engineering principles and practices, is the sole responsibility of the user and should not be used without consulting a Registered Professional Engineer.	NOTE: All material and workmanship shall be in accordance with the current Oregon Standard Specifications

OREGON STANDARD DRAWINGS

SEDIMENT TRAP

2021

DATE	REVISION DESCRIPTION

RD1065

Effective Date: December 1, 2020 - May 31, 2021

RD1065

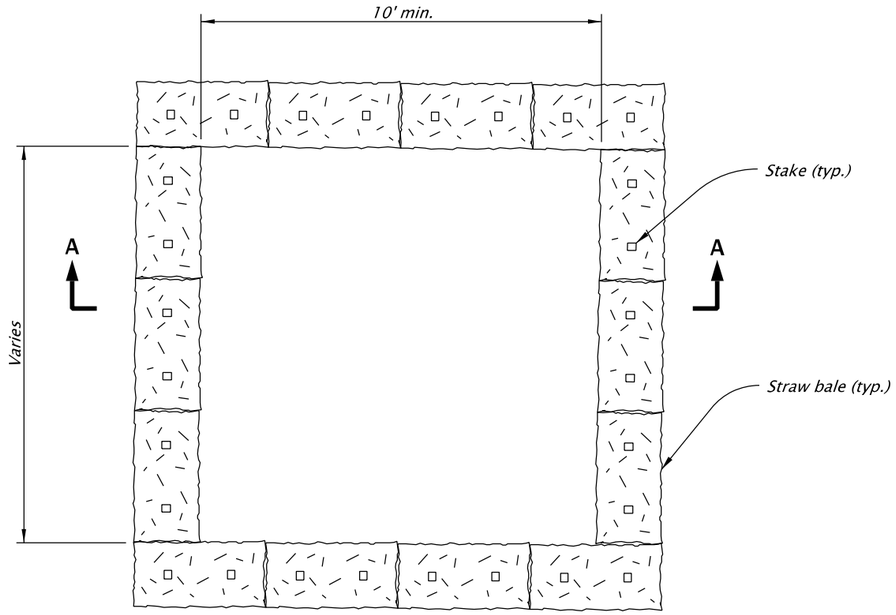

PLAN

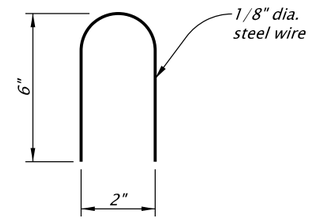

STAPLE DETAIL
NOT TO SCALE

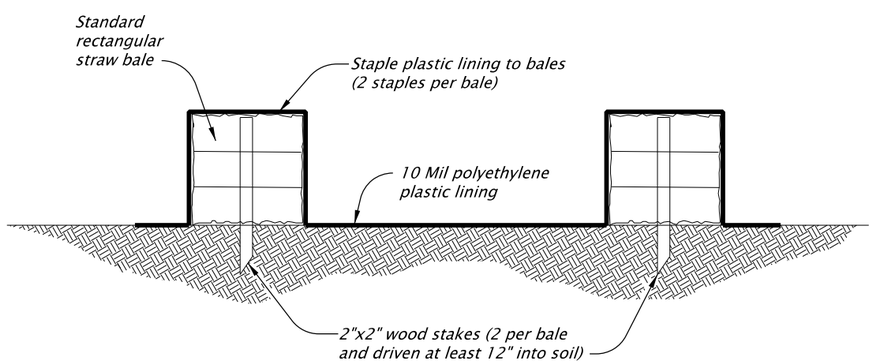

SECTION A-A

CONCRETE TRUCK WASH OUT FACILITY
NOT TO SCALE

CALC. BOOK NO. 6403, 6404, 6405

SDR DATE July, 2020

NOTE: All material and workmanship shall be in accordance with the current Oregon Standard Specifications

The selection and use of this Standard Drawing, while designed in accordance with generally accepted engineering principles and practices, is the sole responsibility of the user and should not be used without consulting a Registered Professional Engineer.

OREGON STANDARD DRAWINGS

CONCRETE TRUCK WASH OUT

2021

DATE	REVISION DESCRIPTION

rd1070.dgn 07-01-2020

RD1070

Effective Date: December 1, 2020 - May 31, 2021

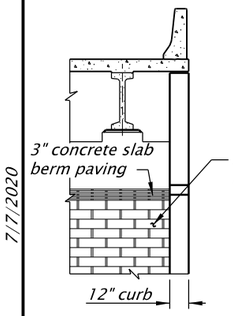

PARTIAL TRANSVERSE ELEVATION

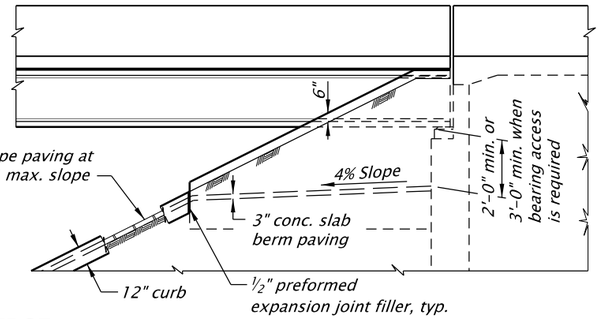

PARTIAL ELEVATION: CASE 1

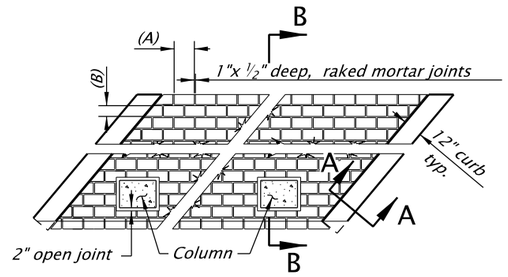

PRECAST BLOCK ALTERNATE PLAN

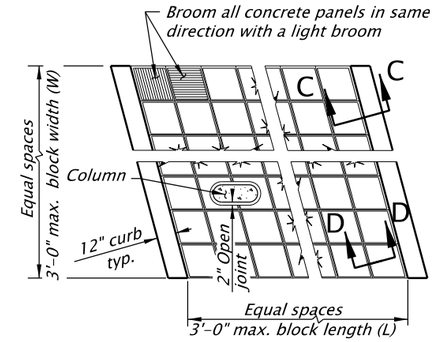

CAST-IN-PLACE ALTERNATE PLAN

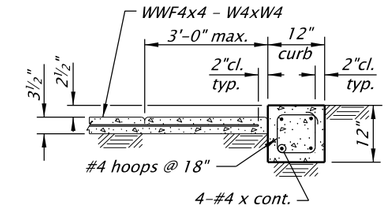

SECTION C-C

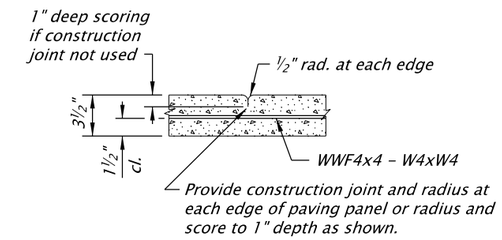

SECTION D-D

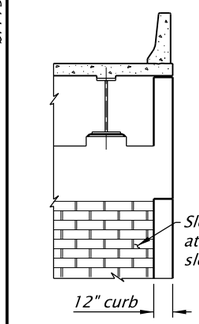

PARTIAL TRANSVERSE ELEVATION

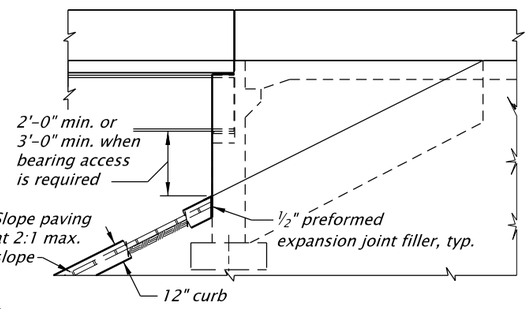

PARTIAL ELEVATION: CASE 2

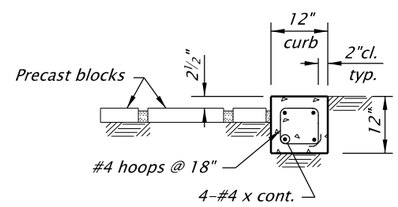

SECTION A-A

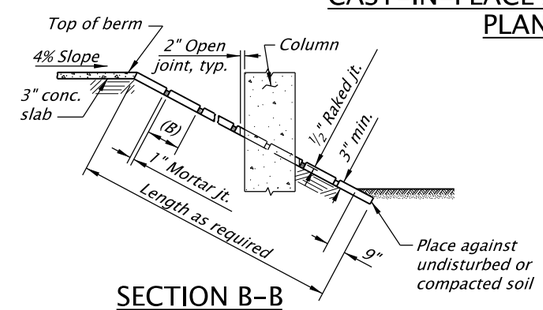

SECTION B-B

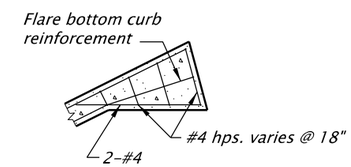

DETAIL "A"

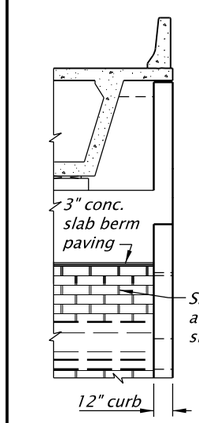

PARTIAL TRANSVERSE ELEVATION

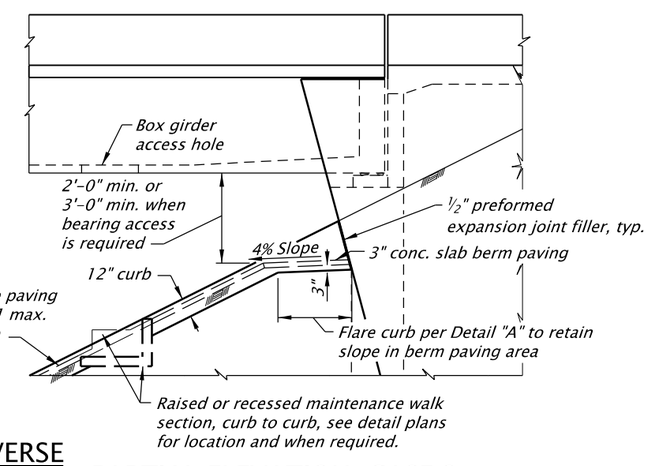

PARTIAL ELEVATION: CASE 3

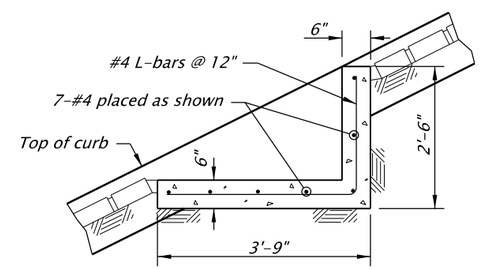

RECESSED MAINTENANCE WALK SECTION

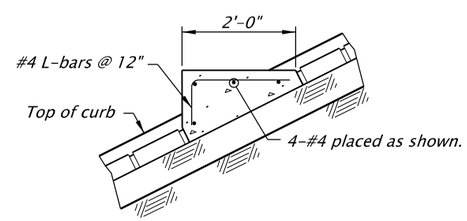

RAISED MAINTENANCE WALK SECTION

GENERAL NOTES

Provide all reinforcing steel according to ASTM Specification A706, or AASHTO M31 (ASTM A615), Grade 60. Use the following splice lengths unless shown otherwise:

Bar Size		#3	#4	#5
Splice Length	Uncoated	1'-0"	1'-4"	1'-8"
	Epoxy Coated	1'-5"	1'-10"	2'-4"

Provide all welded steel wire fabric according to AASHTO M55 (ASTM A185) or AASHTO M221 (ASTM A497). Place all fabric edge laps with no less than one mesh in width.
Place all bars and fabric as shown.
Construct all berm slabs with 3" deep cast-in-place unreinforced concrete.
Provide precast blocks or cast-in-place concrete panels for slope paving.
Use same size blocks at any bridge site.

PRECAST BLOCKS

Blocks may vary in size from 8" to 18" wide (B) by 16" to 36" long (A).
Provide the width to length ratio within the range of B/A = 0.33 to 0.50 with minimum thickness of 3".
Cast or cut odd blocks at job site.
Use hardrock or lightweight concrete. Minimum design strength in 28 days of 1500 psi.

CAST-IN-PLACE BLOCKS

Blocks may vary in size up to a maximum of 3'-0" in length (L) and width (W).
Provide the width to length ratio within the range of W/L = 0.5 to 1.0.
Blocks may be cast-in-place individually, in rows, or all simultaneously.
Each block shall have a full depth construction joint or 1" deep scored joint between each adjacent block or curb.

CALC. BOOK NO. -

SDR DATE 02-July-2020

NOTE: All material and workmanship shall be in accordance with the current Oregon Standard Specifications

The selection and use of this Standard Drawing, while designed in accordance with generally accepted engineering principles and practices, is the sole responsibility of the user and should not be used without consulting a Registered Professional Engineer.

OREGON STANDARD DRAWINGS

SLOPE PAVING

2021

DATE	REVISION DESCRIPTION
-	-
-	-
-	-
-	-
-	-

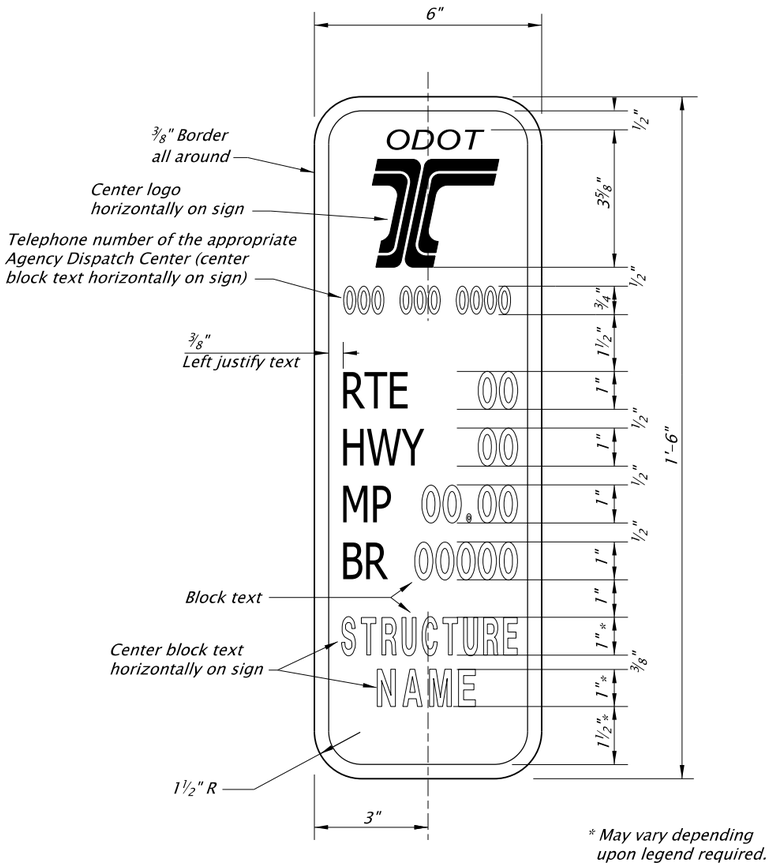

BRIDGE ID MARKER

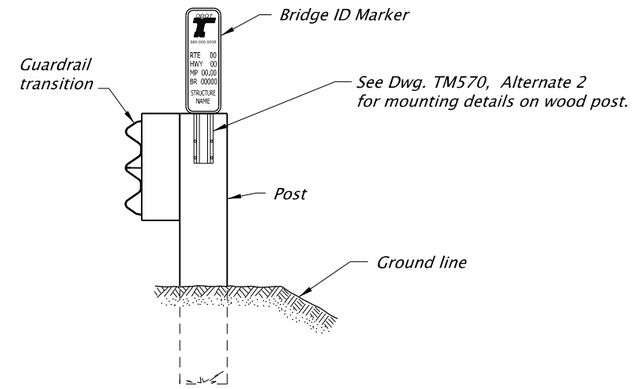

BRIDGE ID MARKER
IN RAIL TRANSITION

GENERAL NOTES

See Special Provision 00842 for materials and mounting requirements not shown.

See bridge contract plans for locations of bridge ID markers.

Fabricate markers from sheet aluminum with nominal thickness of 0.063".

Furnish Type "G" green background with silver-white retroreflective legend according to 02910.

Text and numbers are Type B font.

Provide four 7/32" dia mounting holes, pattern to match post. Use same hole pattern for mounting on concrete surface.

See Bridge ID Marker Chart in Structure Plans for filling out block text.

Accompanied by dwg. TM570

CALC. BOOK NO. -

SDR DATE 02-July-2020

NOTE: All material and workmanship shall be in accordance with the current Oregon Standard Specifications

The selection and use of this Standard Drawing, while designed in accordance with generally accepted engineering principles and practices, is the sole responsibility of the user and should not be used without consulting a Registered Professional Engineer.

OREGON STANDARD DRAWINGS

BRIDGE ID MARKER

2021

DATE	REVISION DESCRIPTION
-	-
-	-
-	-
-	-
-	-

br208.dgn 07-2020

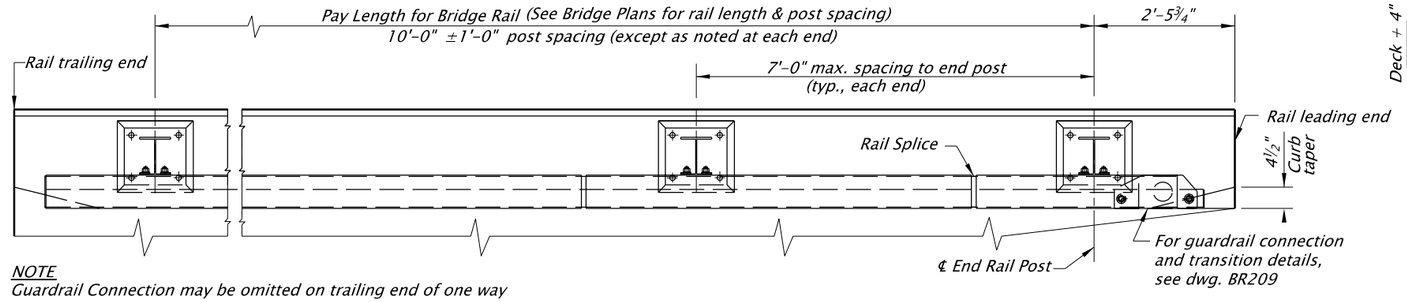

NOTE
Guardrail Connection may be omitted on trailing end of one way structures when omitted on detail plans. When not omitted, use connection details shown on dwg. BR209 for leading end.

PLAN

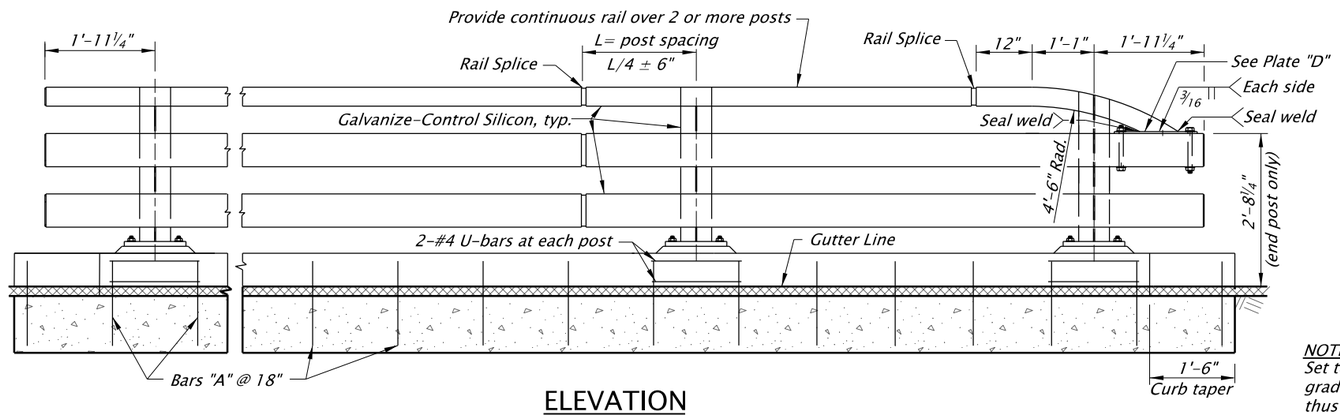

ELEVATION

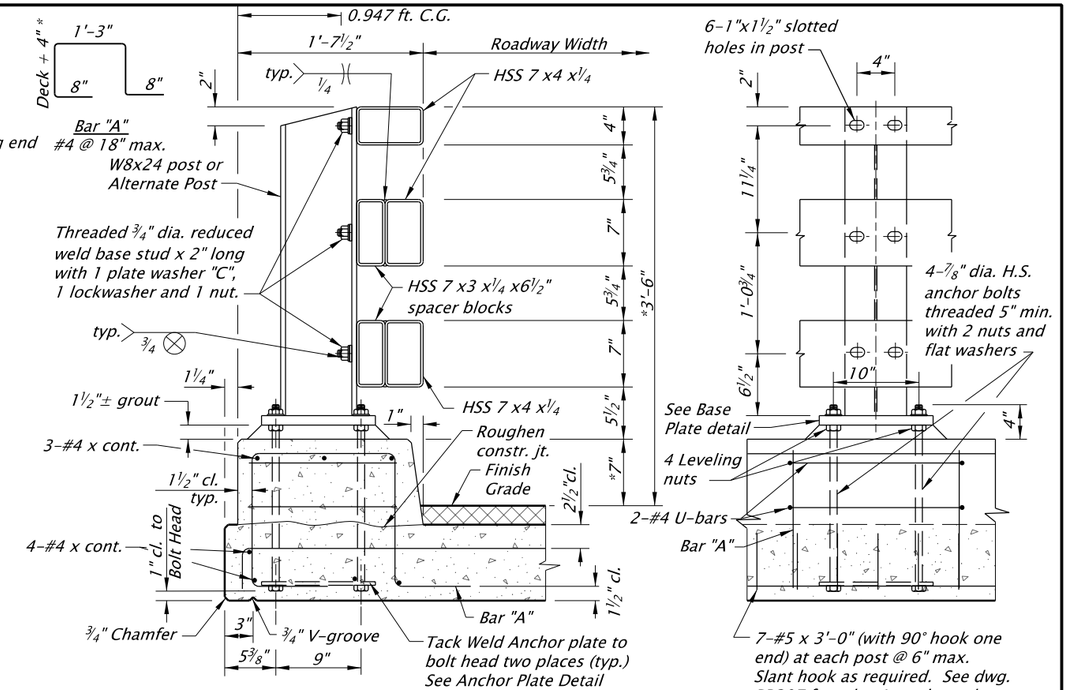

CURB AND POST DETAIL

NOTE
Set top of post 3'-6" above finish grade. Increase dimensions marked thus (*) by depth of ACWS.

GENERAL NOTES:
Rail designed and crash tested to meet MASH TL-4 requirements. Transition designed to meet MASH TL-3.

Provide structural tubing, steel posts and plates according to Oregon Standard Specification 2810.20.

Provide High Strength anchor bolts (Grade 105) according to Oregon Standard Specification 02560.30 (b).

Provide reinforcing steel conforming to ASTM A706 or AASHTO M31 (ASTM A615) Grade 60.

Provide concrete Class 3300 - 1½ or ¾

Construct railing conforming to the horizontal and vertical alignment of the structure. Install posts normal to grade in longitudinal direction and vertical in transverse direction.

Payment for the railing will include compensation for furnishing and installing the necessary guardrail connection plates and terminal connectors.

Hot-dip galvanized structural steel including fasteners after fabrication, except as noted. Provide Galvanize-Control Silicon according to Oregon Standard Specification 02530.70.

Accompanied by dwgs. BR207, BR209

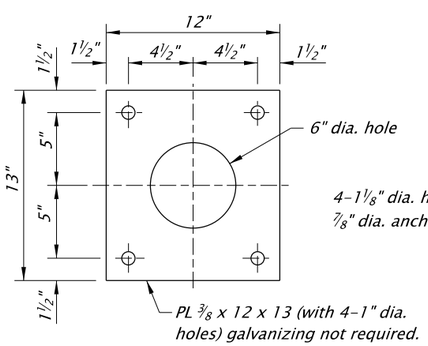

ANCHOR PLATE DETAIL

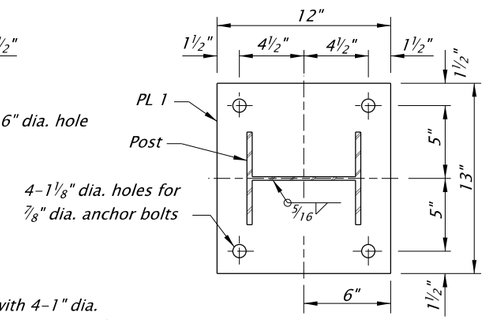

BASE PLATE DETAIL

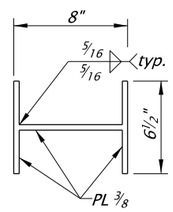

ALTERNATE POST

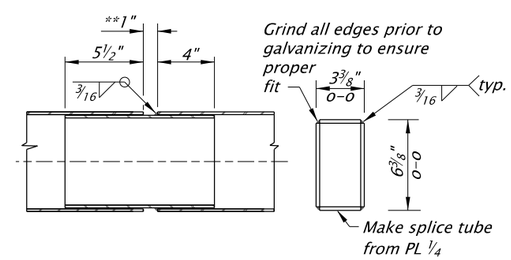

RAIL SPLICE DETAIL

**1" gap unless noted otherwise on detail plans. Provide a Rail Splice in panel that has a deck expansion joint. If more than 2" movement needed, increase length of inner member.

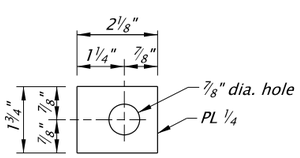

PLATE WASHER "C"

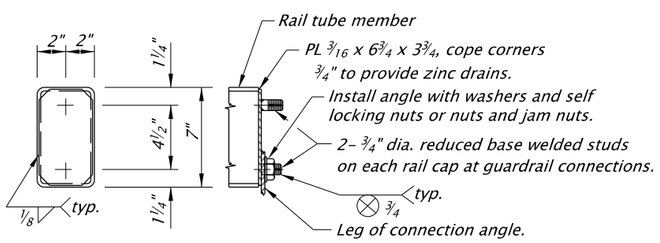

RAIL CAP DETAIL

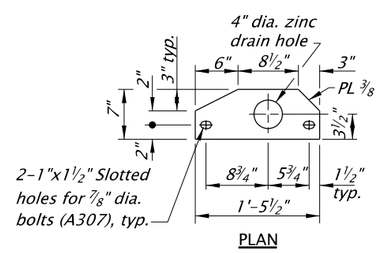

PLAN

PLATE "D"

CALC. BOOK NO. -	SDR DATE 02-July-2020
The selection and use of this Standard Drawing, while designed in accordance with generally accepted engineering principles and practices, is the sole responsibility of the user and should not be used without consulting a Registered Professional Engineer.	NOTE: All material and workmanship shall be in accordance with the current Oregon Standard Specifications

OREGON STANDARD DRAWINGS

3-TUBE CURB MOUNT RAIL

2021

DATE	REVISION DESCRIPTION
July/2020	Updated general notes
-	-
-	-
-	-
-	-

BR208

Effective Date: December 1, 2020 - May 31, 2021

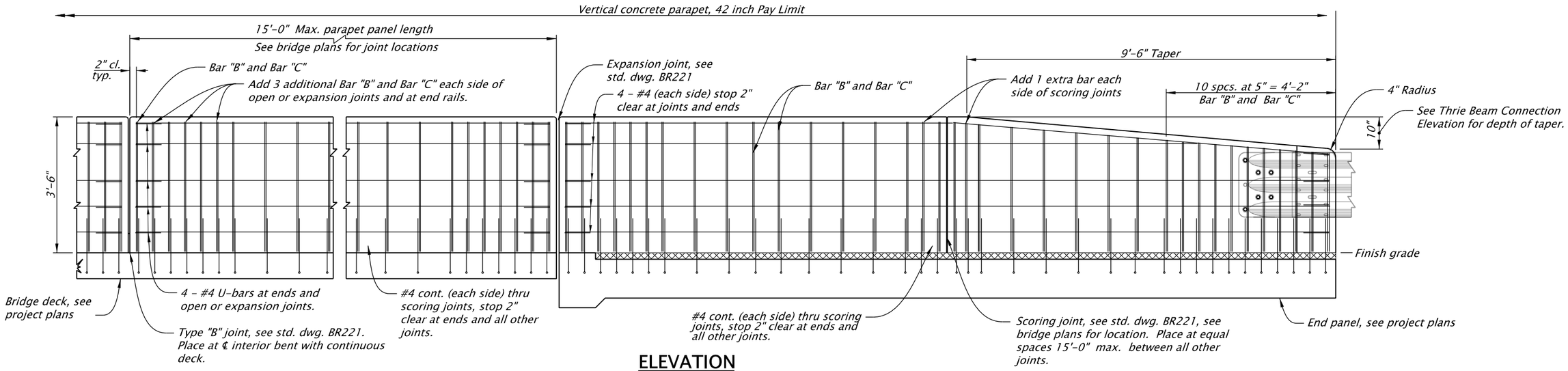

ELEVATION

Scale: 1/4"=1'-0"

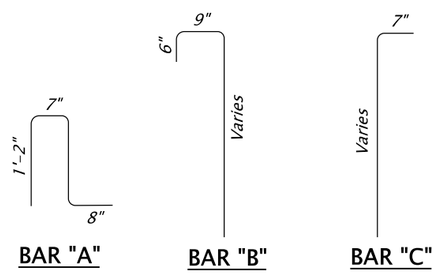

BAR "A" BAR "B" BAR "C"

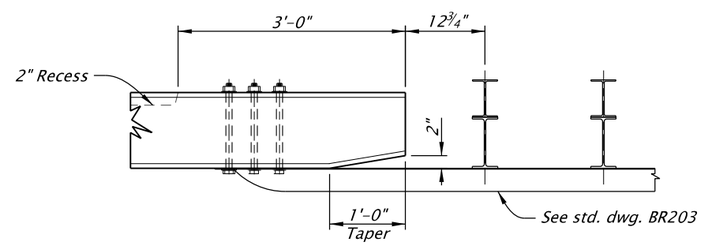

PLAN

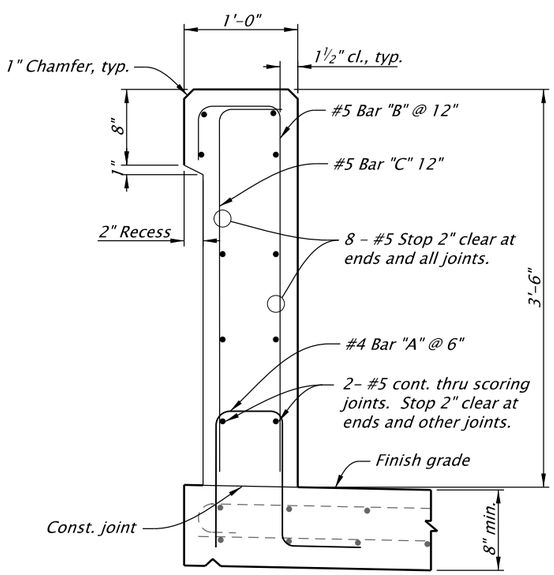

TYPICAL SECTION

Scale: ¾"=1'-0"

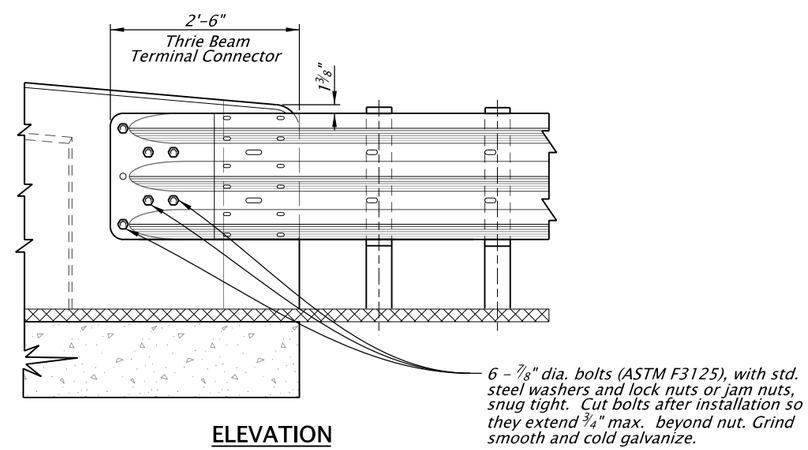

ELEVATION

THRIE BEAM CONNECTION

Scale: ½"=1'-0"

NOTE:
Drill horizontal bolt holes (bolt dia. + ⅛") in hardened concrete with low-impact rotary drill. Cut bolts after installation so they extend ¾" max. beyond nut. Grind smooth and cold galvanize.

GENERAL NOTES

See project plans for spacing, joint locations and details not shown.

Rail evaluated to meet MASH TL-4 requirements. This rail can be used for speeds of 45 mph and greater when a TL-3 rated guardrail transition is used.

Provide all reinforcing steel conforming to AASHTO M31 (ASTM A615), Grade 60 or ASTM A706.

Place all bars 1½" clear of the nearest face of concrete unless shown otherwise.

Provide Class 3300 -1½ or ¾ concrete.

Provide steel cover plates conforming to AASHTO M183 (ASTM A36). Hot dip galvanize after fabrication.

At skewed bents up to 20° make joints parallel to the bent center line.

For skews greater than 20° make joints normal to rail.

Accompanied by dwg. BR203, BR221

CALC. BOOK NO. -	SDR DATE 02-July-2020
The selection and use of this Standard Drawing, while designed in accordance with generally accepted engineering principles and practices, is the sole responsibility of the user and should not be used without consulting a Registered Professional Engineer.	NOTE: All material and workmanship shall be in accordance with the current Oregon Standard Specifications
	OREGON STANDARD DRAWINGS VERTICAL CONCRETE PARAPET, 42 INCH 2021

DATE	REVISION DESCRIPTION
-	-
-	-
-	-
-	-
-	-

BR222

CONSTRUCTION NOTES:
Test adhesive anchors in accordance with Oregon Standard Specification 00535.45. Perform corrective measures to provide adequate capacity if any of the tests do not meet the required test load. Repair damage from testing as directed.

Erect mounting plates square to the top of parapet. Place grout under mounting plate for gaps greater than 1/16". Provide grout according to Oregon Standard Specification 2080.30.

Attach rail section members continuously to a minimum of two mounting plates but not more than four.

One shop splice per panel is permitted with minimum 85% penetration. The weld may be square groove, double vee groove, or single groove. Grind smooth.

Round or chamfer all exposed edges of steel components 1/16" by grinding prior to galvanizing.

Cap all open ends of tubular steel sections.

Field verify rail heights prior to fabrication.

MATERIAL NOTES:
Provide structural tubing according to Oregon Standard Specification 02810.20.

Provide steel mounting plates conforming to ASTM A572 Gr 50 unless otherwise noted.

Anchor rods must be ¾" dia. ASTM F1554 Grade 105 threaded rods with heavy hex nuts, one hardened steel washer, and one (2" O.D.) steel washer each.

Anchor installation, include hole size, drilling, and clean out, must be in accordance with Oregon Standard Specification 00535. Anchor adhesive chosen must be able to achieve a minimum pullout force of 30kips. Use Hilti HIT-HY200-A, or Hilti HIT-RE 500v3, or Red Head C6+ or Ultrabond HS-1CC epoxy adhesive from the QPL. Minimum adhesive anchor embedment depth is 10½".

Hot-dip galvanized structural steel including fasteners after fabrication, except as noted. Provide Galvanize-Control Silicon according to Oregon Standard Specification 02530.70.

GENERAL NOTES:
Rail evaluated to meet MASH TL-4 requirements. This rail retrofit can be used for speeds of 45 mph and greater when a TL-3 rated guardrail transition is used.

Do not use this railing on bridges with expansion joints providing more than 5" movement.

Submit erection drawings showing panel lengths, mounting plate spacing, and anchor rod setting to the Engineer for approval.

NOTE TO DESIGNER:
Check structural capacity of the existing bridge deck overhang and strengthen as required.

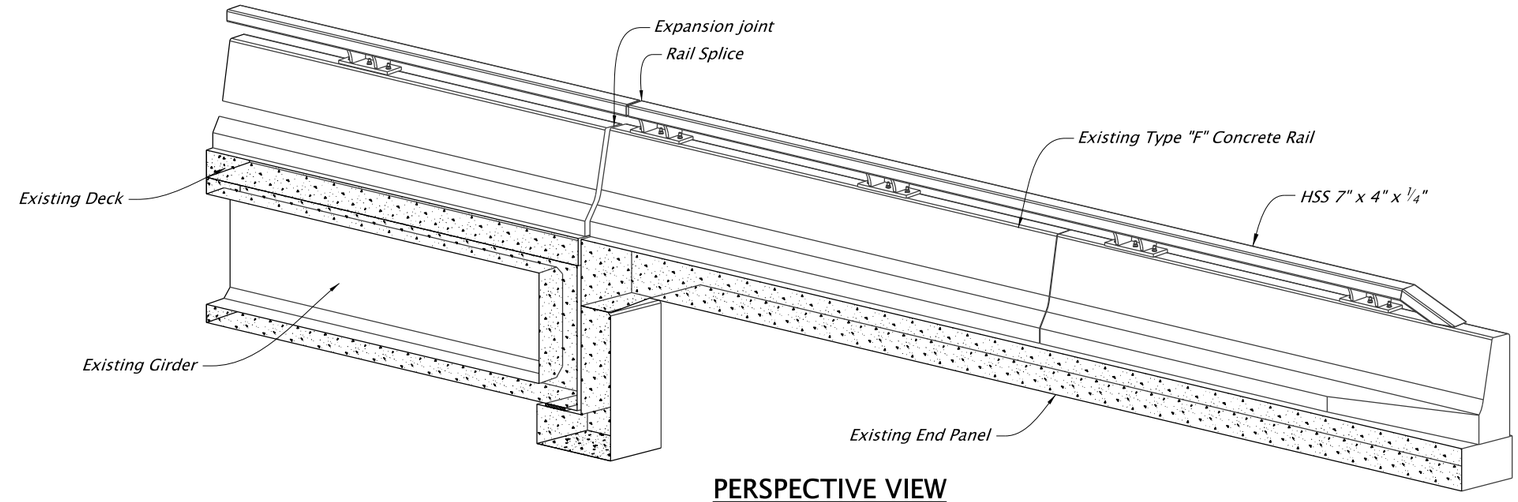

PERSPECTIVE VIEW
Scale: ¼"=1'-0"

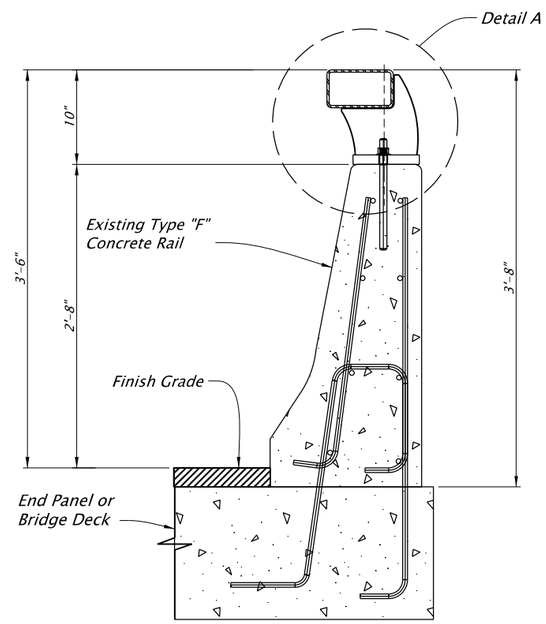

TYPICAL SECTION
Scale: ¾"=1'-0"

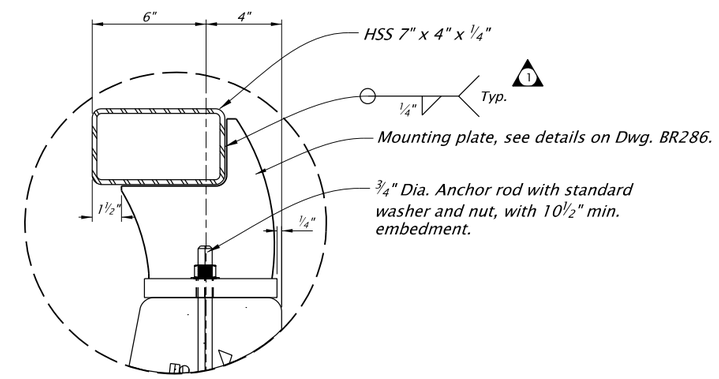

DETAIL A
Scale: 1½"=1'-0"

RAIL DATA FOR HORIZONTAL CURVES			
	RADIUS TO FACE OF RAIL	MAX. CHORD LENGTH	CONSTRUCT OR FABRICATE
Rail Members	Over 2800'	29'-0"	Straight rail sections
	Over 1400' thru 2800'	14'-6"	To required radius
	Over 700' thru 1400'	7'-3"	or to chords shown
	Thru 700'	Zero	To required radius

Accompanied by dwg. BR200, BR203, BR236

CALC. BOOK NO. –

SDR DATE 02-July-2020

NOTE: All material and workmanship shall be in accordance with the current Oregon Standard Specifications

The selection and use of this Standard Drawing, while designed in accordance with generally accepted engineering principles and practices, is the sole responsibility of the user and should not be used without consulting a Registered Professional Engineer.

OREGON STANDARD DRAWINGS

TYPE "F" CONCRETE RAIL RECTANGULAR TUBE RETROFIT SHEET 1 OF 2

2021

DATE	REVISION DESCRIPTION
July/2020	Update section number for adhesive anchor test.
–	Mondify mounting plate to tube weld size, Detail A.
–	–
–	–
–	–

Effective Date: December 1, 2020 - May 31, 2021

BR285

br400.dgn 07-2020

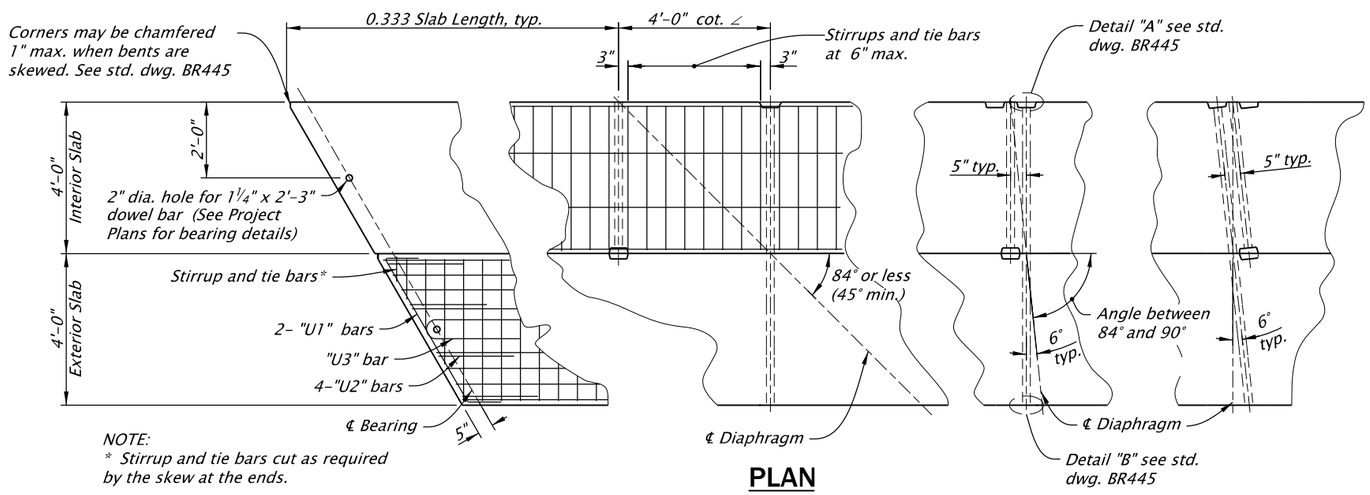

NOTE:
* Stirrup and tie bars cut as required by the skew at the ends.

PLAN

Scale: ¼" = 1'-0"

NOTE "A" (Slab End Bars)
2- #4 x 7'-6", slabs 6, 7 and 8.
Place bars each end of each slab (Epoxy coat).

NOTE:
Grout keyway as specified in General Notes.
Omit keyway on exterior side of exterior slabs.
Keyway is continuous.

SECTION PROPERTIES

Area =	568 in²
c.g. =	5.97 in
I =	6,851 in⁴
St =	1137 in³
Sb =	1147 in³
Weight =	612 lbs/ft
J =	23,400 in⁴
K =	0.59
V/S =	4.74

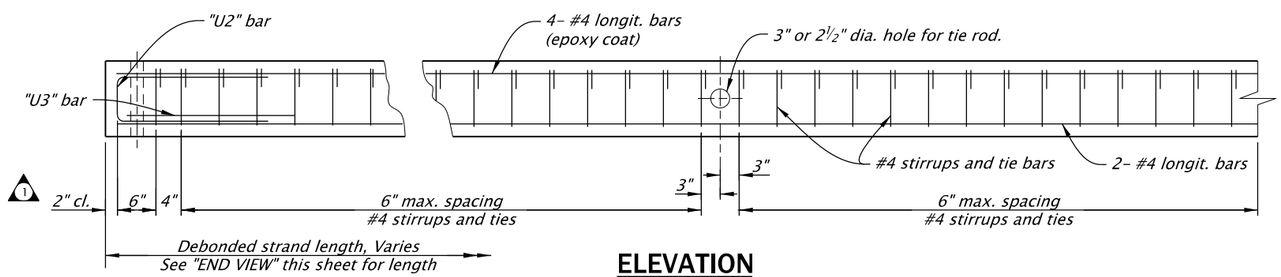

ELEVATION

Scale: ½" = 1'-0"

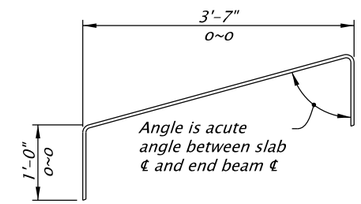

#4 "U1" BAR

(4- required per slab)

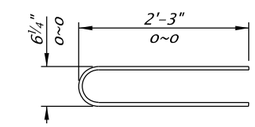

#6 "U3" BAR (A706)

(2- required per slab)

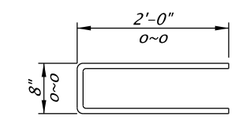

#5 "U2" BAR

(8- required per slab)

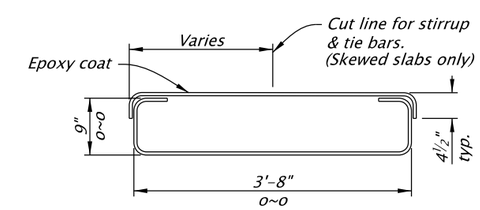

#4 STIRRUP & TIE

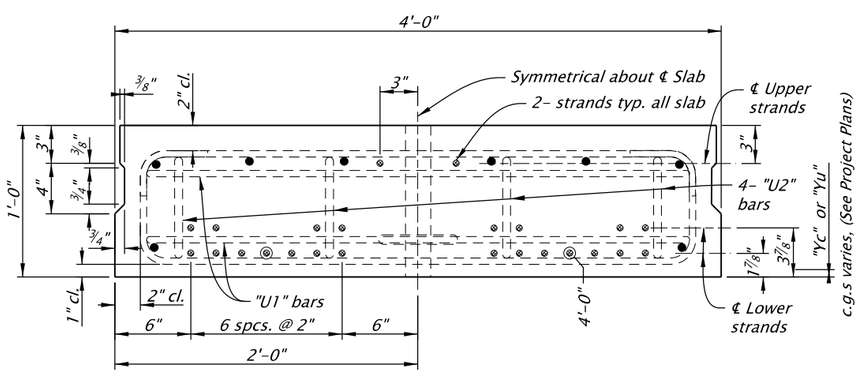

END VIEW

Scale: 1" = 1'-0"

DEBONDED STRANDS:
Dimension shown indicates the length of tube required, at both ends, to debond the indicated strand. See the "PRECAST PRESTRESSED SLAB SCHEDULE" in the project plans for the strand pattern detail.
Detension strands in order of increasing tube length shown.

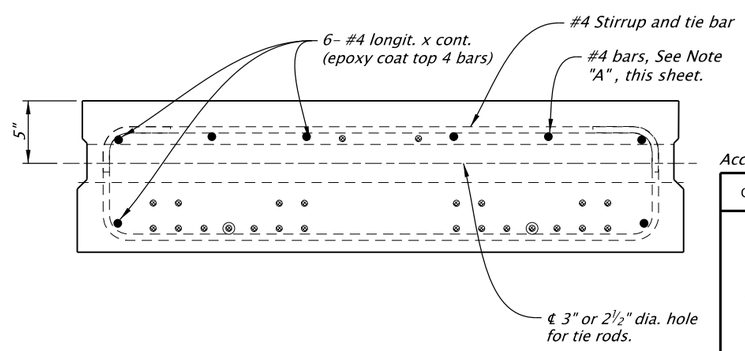

MIDSPAN VIEW

Scale: 1" = 1'-0"

Accompanied by dwg. BR445

CALC. BOOK NO. -

SDR DATE 02-July-2020

NOTE: All material and workmanship shall be in accordance with the current Oregon Standard Specifications

The selection and use of this Standard Drawing, while designed in accordance with generally accepted engineering principles and practices, is the sole responsibility of the user and should not be used without consulting a Registered Professional Engineer.

OREGON STANDARD DRAWINGS

12" PRECAST PRESTRESSED SLAB

2021

DATE	REVISION DESCRIPTION
July/2020	Revised stirrup and tie bar spacing
July/2020	Updated drawing to current stds.
-	-
-	-
-	-

Effective Date: December 1, 2020 – May 31, 2021

br405.dgn 07-2020

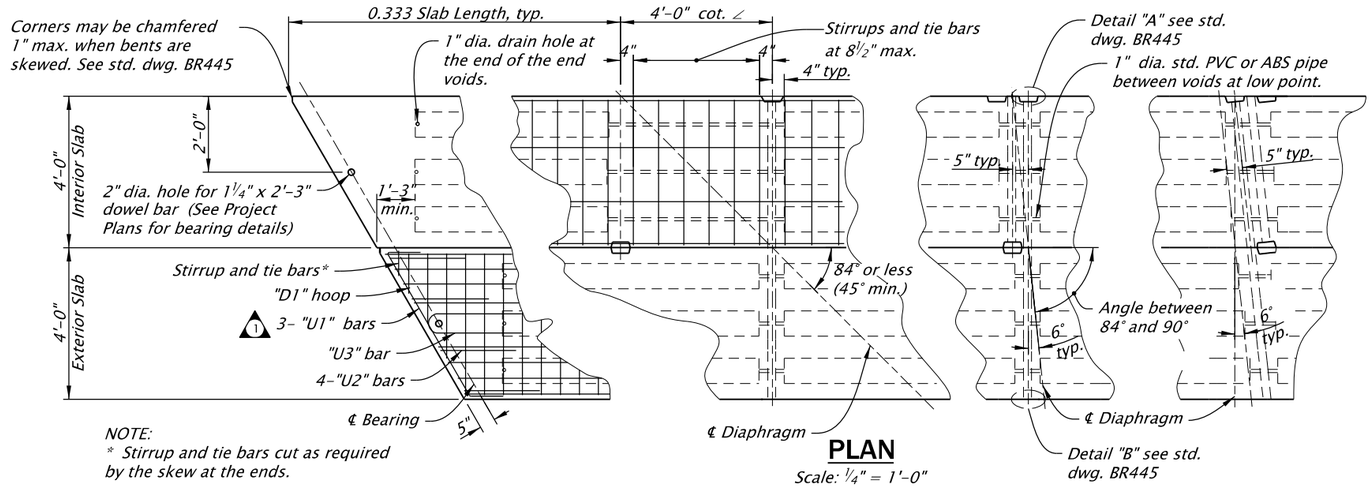

NOTE:
* Stirrup and tie bars cut as required by the skew at the ends.

PLAN

Scale: ¼" = 1'-0"

NOTE "A" (Slab End Bars)
2- #4 x 7'-6", slab 5
2- #4 x 10'-0", slabs 6, 7, and 8
2- #4 x 12'-6", slab 9
Place bars each end of each slab (Epoxy coat).

NOTE:
Grout keyway as specified in General Notes.
Omit keyway on exterior side of exterior slabs.
Keyway is continuous.

SECTION PROPERTIES

Area =	562in²
c.g. =	7.45 in
I =	12,769 in⁴
St =	1691in³
Sb =	1714 in³
Weight =	605 lbs/ft
J =	31,900 in⁴
K =	0.69
V/S =	4.46
Form wt = (tubes)	10 lbs/ft
Total wt w/forms=	615 lbs/ft

Diaphragm Weight

No Skew	170 lb
15° Skew	270 lb
30° Skew	470 lb
45° Skew	750 lb

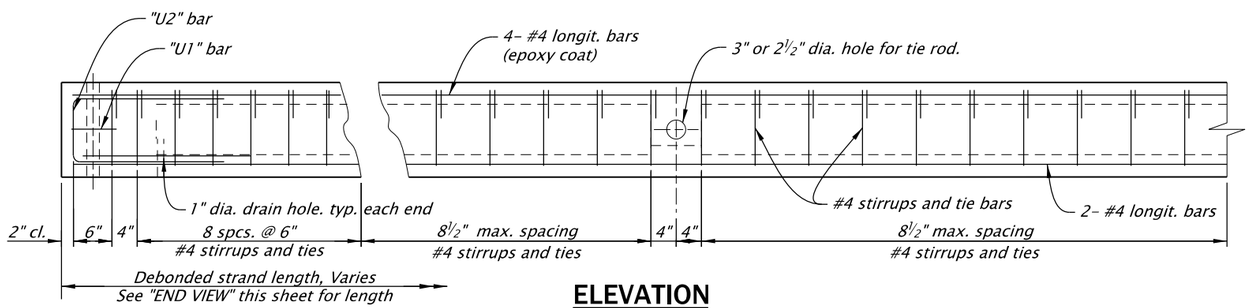

ELEVATION

Scale: ½" = 1'-0"

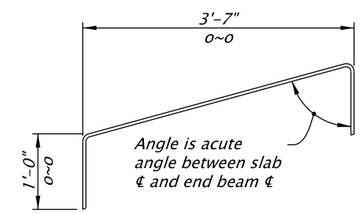

#4 "U1" BAR

(6- required per slab)

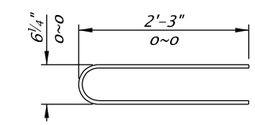

#6 "U3" BAR (A706)

(2- required per slab)

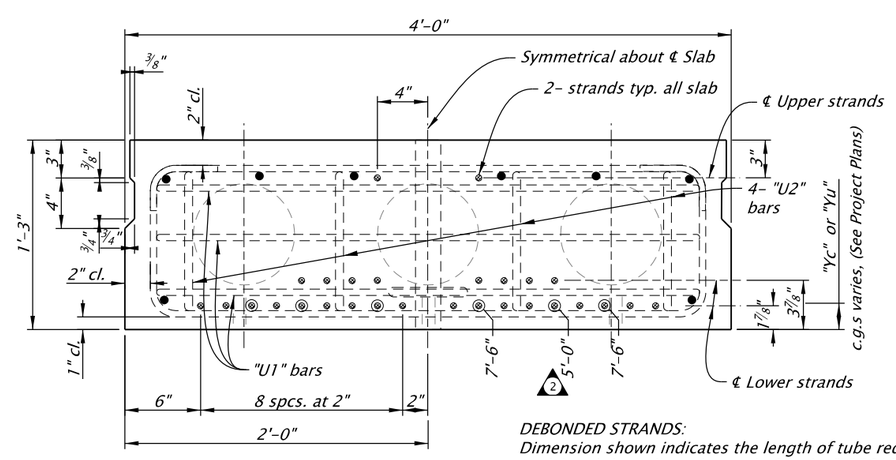

END VIEW

Scale: 1" = 1'-0"

DEBONDED STRANDS:
Dimension shown indicates the length of tube required, at both ends, to debond the indicated strand. See the "PRECAST PRESTRESSED SLAB SCHEDULE" in the project plans for the strand pattern detail.
Detension strands in order of increasing tube length shown.

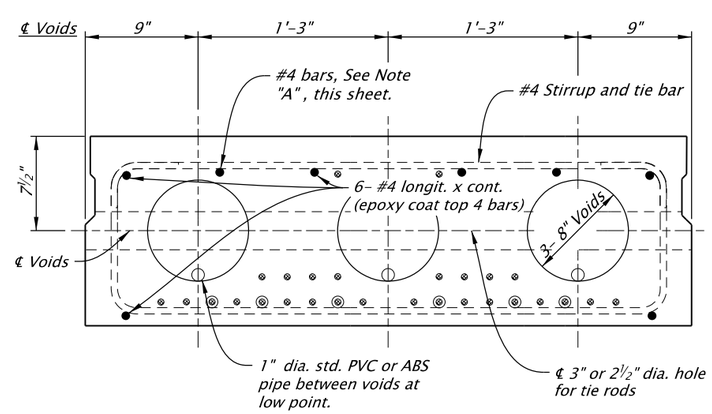

MIDSPAN VIEW

Scale: 1" = 1'-0"

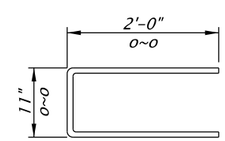

#5 "U2" BAR

(8- required per slab)

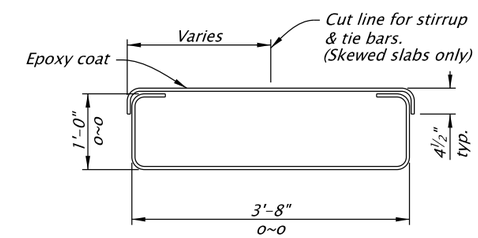

#4 STIRRUP & TIE

Accompanied by dwg. BR445

CALC. BOOK NO. -

SDR DATE 02-July-2020

NOTE: All material and workmanship shall be in accordance with the current Oregon Standard Specifications

The selection and use of this Standard Drawing, while designed in accordance with generally accepted engineering principles and practices, is the sole responsibility of the user and should not be used without consulting a Registered Professional Engineer.

OREGON STANDARD DRAWINGS

15" PRECAST PRESTRESSED SLAB

2021

DATE	REVISION DESCRIPTION
July/2020	Added end zone reinf.
July/2020	Revised debonded lengths
July/2020	Updated drawing to current stds.
-	-
-	-

BR405

Effective Date: December 1, 2020 - May 31, 2021

br410.dgn 07-2020

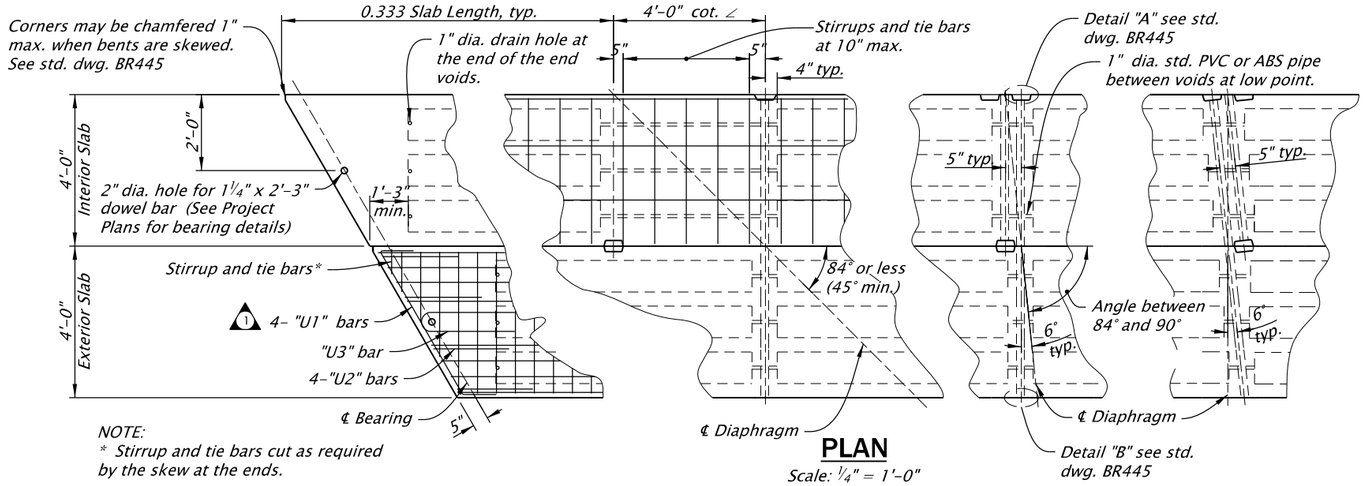

PLAN

Scale: ¼" = 1'-0"

NOTE "A" (Slab End Bars)
2- #4 x 10'-0", slabs 4, 5, and 6
4- #4 x 15'-0", slabs 7, 8 and 9
Place bars each end of each slab (Epoxy coat).

NOTE:
Grout keyway as specified in General Notes.
Omit keyway on exterior side of exterior slabs.
Keyway is continuous.

SECTION PROPERTIES

Area =	621in²
c.g. =	8.94 in
I =	21,626 in⁴
St =	2386 in³
Sb =	2420 in³
Weight =	668 lbs/ft
J =	52,200 in⁴
K =	0.71
V/S =	4.70
Form wt = (tubes)	14 lbs/ft
Total wt w/forms=	682 lbs/ft

Diaphragm Weight

No Skew	260 lb
15° Skew	430 lb
30° Skew	740 lb
45° Skew	1170 lb

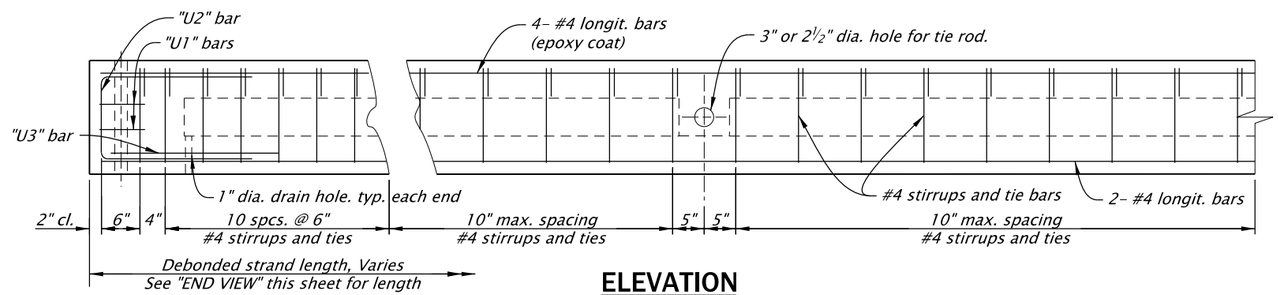

ELEVATION

Scale: ½" =1'-0"

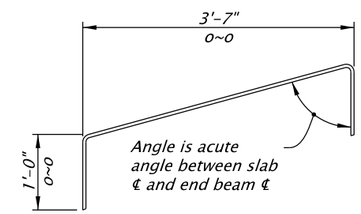

#4 "U1" BAR

(8- required per slab)

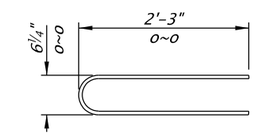

#6 "U3" BAR (A706)

(2- required per slab)

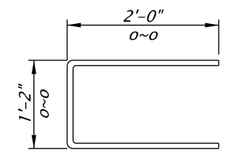

#5 "U2" BAR

(8- required per slab)

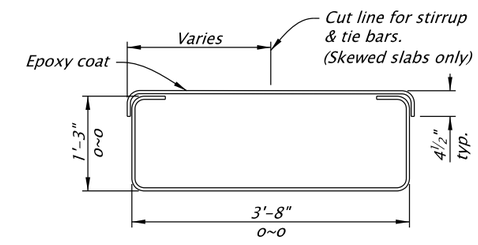

#4 STIRRUP & TIE

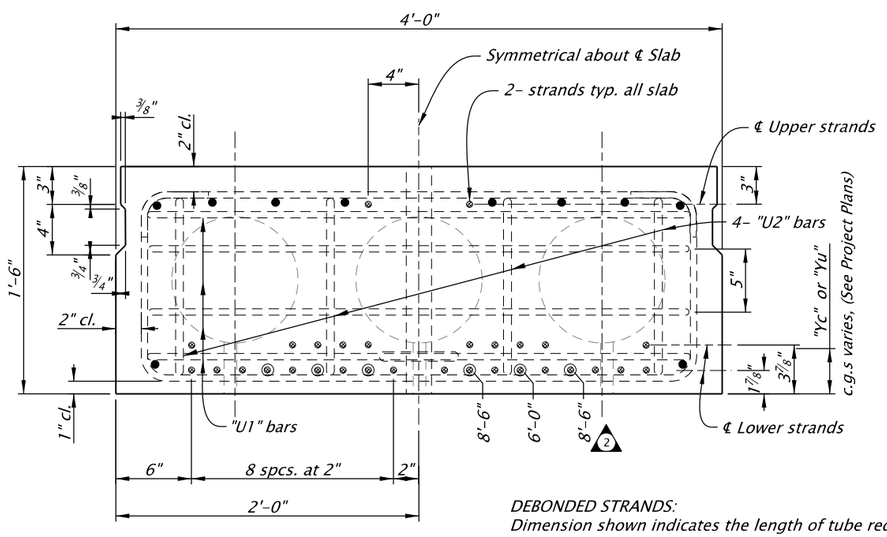

END VIEW

Scale: 1" = 1'-0"

DEBONDED STRANDS:
Dimension shown indicates the length of tube required, at both ends, to debond the indicated strand. See the "PRECAST PRESTRESSED SLAB SCHEDULE" in the project plans for the strand pattern detail.
Detension strands in order of increasing tube length shown.

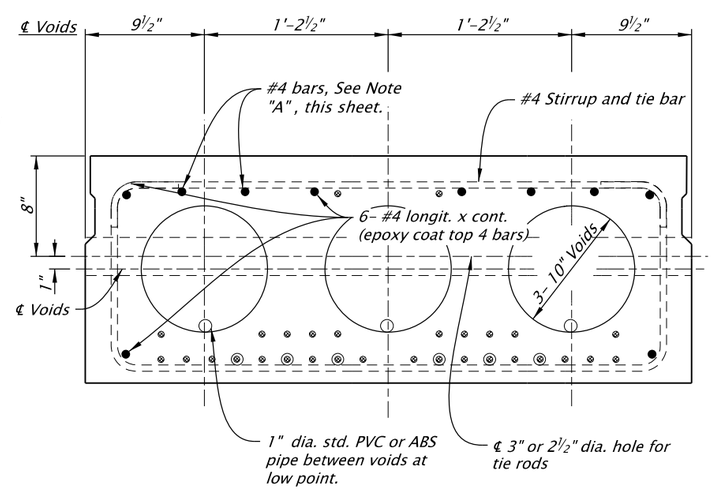

MIDSPAN VIEW

Scale: 1" = 1'-0"

Accompanied by dwg. BR445

CALC. BOOK NO. -

SDR DATE 02-July-2020

NOTE: All material and workmanship shall be in accordance with the current Oregon Standard Specifications

The selection and use of this Standard Drawing, while designed in accordance with generally accepted engineering principles and practices, is the sole responsibility of the user and should not be used without consulting a Registered Professional Engineer.

OREGON STANDARD DRAWINGS

18" PRECAST PRESTRESSED SLAB

2021

DATE	REVISION DESCRIPTION
July/2020	Added end zone reinf.
July/2020	Revised debonded lengths
July/2020	Updated drawing to current stds.
-	-
-	-

BR410

br415.dgn 07-2020

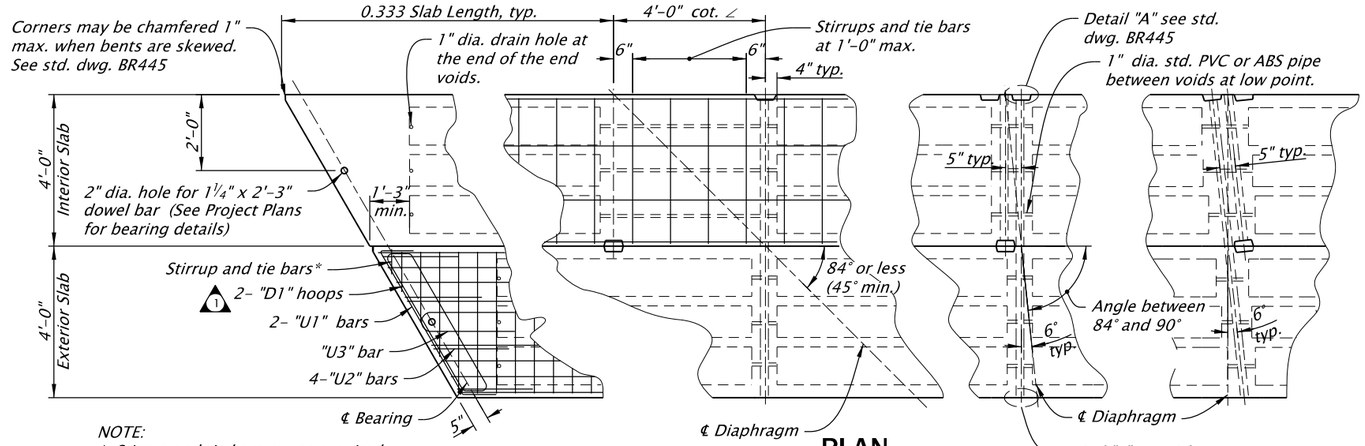

NOTE:
* Stirrup and tie bars cut as required by the skew at the ends.

PLAN
Scale: ¼" = 1'-0"

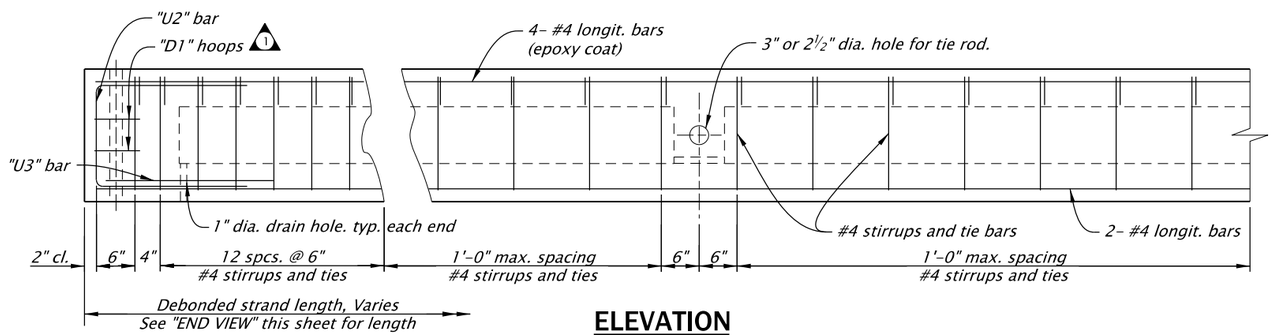

ELEVATION
Scale: ½" = 1'-0"

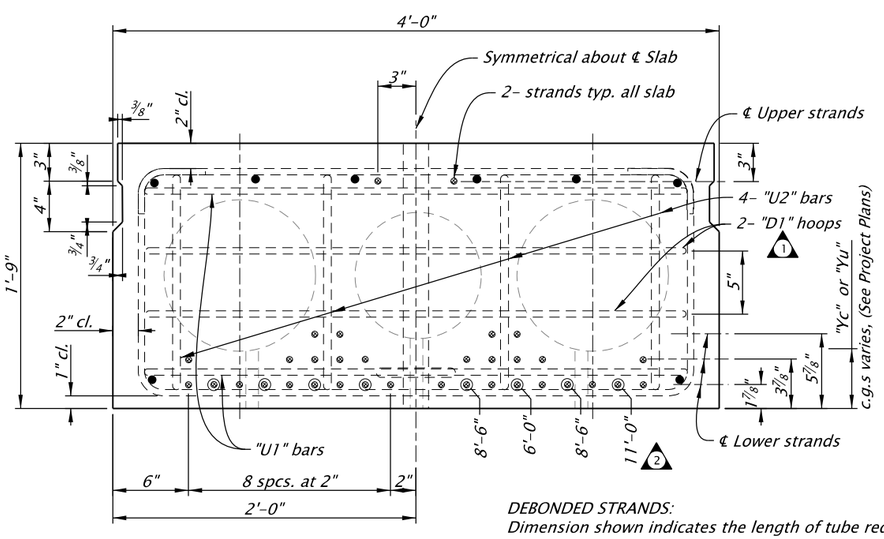

END VIEW
Scale: 1" = 1'-0"

DEBONDED STRANDS:
Dimension shown indicates the length of tube required, at both ends, to debond the indicated strand. See the "PRECAST PRESTRESSED SLAB SCHEDULE" in the project plans for the strand pattern detail.
Detension strands in order of increasing tube length shown.

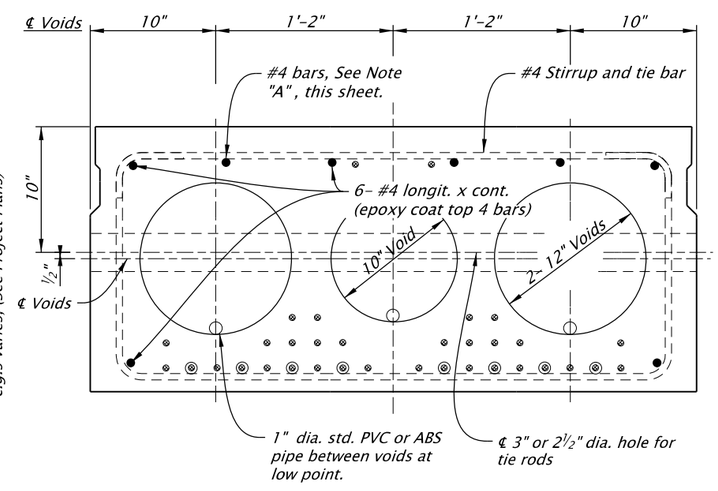

MIDSPAN VIEW
Scale: 1" = 1'-0"

NOTE "A" (Slab End Bars)
2- #4 x 10'-0", slabs 6 and 7
2- #4 x12'-6", slabs 8 and 9
2- #4 x 15'-0", slabs10 and 11
Place bars each end of each slab (Epoxy coat).

NOTE:
Grout keyway as specified in General Notes.
Omit keyway on exterior side of exterior slabs.
Keyway is continuous.

SECTION PROPERTIES

Area =	696in²
c.g. =	10.43 in
I =	34,152 in⁴
St =	3230in³
Sb =	3275in³
Weight =	749 lbs/ft
J =	77,100 in⁴
K =	0.73
V/S =	5.04
Form wt = (tubes)	16 lbs/ft
Total wt w/forms=	765 lbs/ft

Diaphragm Weight

No Skew	340 lb
15° Skew	560 lb
30° Skew	960 lb
45° Skew	1520 lb

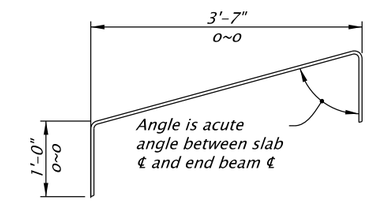

#4 "U1" BAR
(4- required per slab)

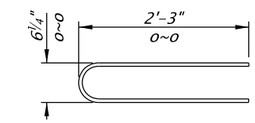

#6 "U3" BAR (A706)
(2- required per slab)

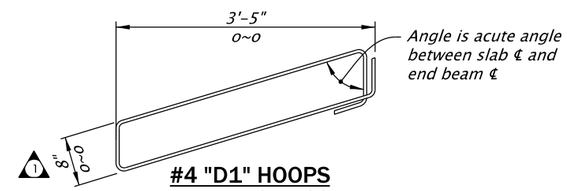

#4 "D1" HOOPS
(4- required per slab)

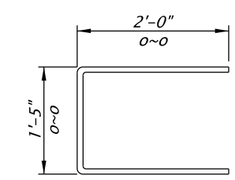

#5 "U2" BAR
(8- required per slab)

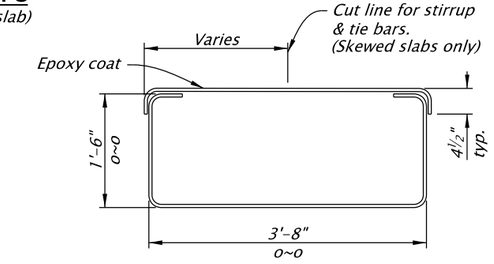

#4 STIRRUP & TIE

Accompanied by dwg. BR445

CALC. BOOK NO. -

SDR DATE 02-July-2020

NOTE: All material and workmanship shall be in accordance with the current Oregon Standard Specifications

The selection and use of this Standard Drawing, while designed in accordance with generally accepted engineering principles and practices, is the sole responsibility of the user and should not be used without consulting a Registered Professional Engineer.

OREGON STANDARD DRAWINGS

21" PRECAST PRESTRESSED SLAB

2021

DATE	REVISION DESCRIPTION
July/2020	Added end zone reinf.
July/2020	Revised debonded length.
July/2020	Updated drawing to current stds.
-	-
-	-

BR415

br420.dgn 07-2020

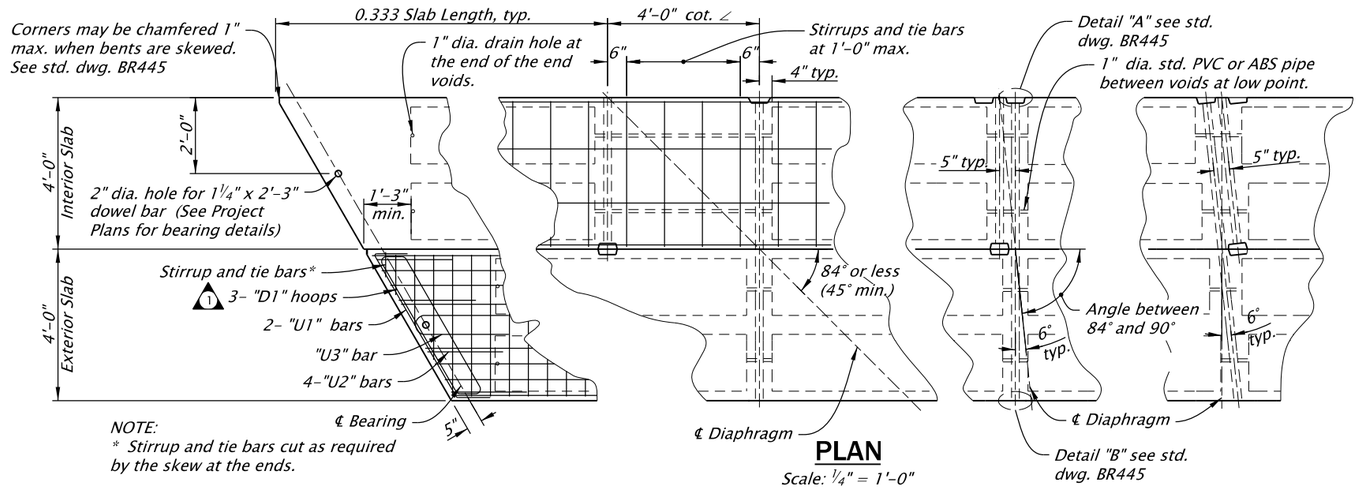

NOTE:
* Stirrup and tie bars cut as required by the skew at the ends.

PLAN
Scale: ¼" = 1'-0"

NOTE "A" (Slab End Bars)
2- #4 x 10'-0", slabs 6 and 7
4- #4 x 12'-6", slabs 8, 9,10, 11, 12 and 13
Place bars each end of each slab (Epoxy coat).

NOTE:
Grout keyway as specified in General Notes.
Omit keyway on exterior side of exterior slabs.
Keyway is continuous.

SECTION PROPERTIES

Area =	851in²
c.g. =	12.92 in
I =	63,596 in⁴
St =	4862in³
Sb =	4923in³
Weight =	916 lbs/ft
J =	128,800 in⁴
K =	0.77
V/S =	5.75
Form wt = (tubes)	20 lbs/ft
Total wt w/forms=	936 lbs/ft

Diaphragm Weight

No Skew	430 lb
15° Skew	710 lb
30° Skew	1230 lb
45° Skew	1940 lb

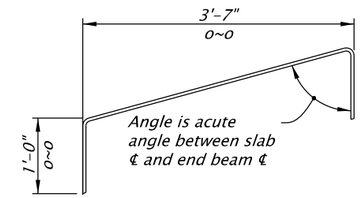

#4 "U1" BAR
(4- required per slab)

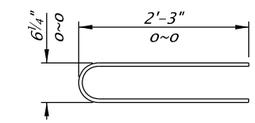

#6 "U3" BAR (A706)
(2- required per slab)

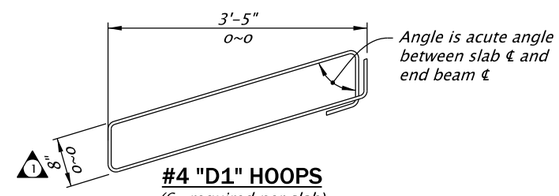

#4 "D1" HOOPS
(6- required per slab)

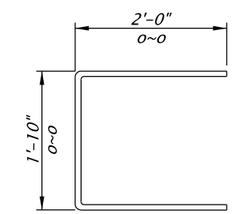

#5 "U2" BAR
(8- required per slab)

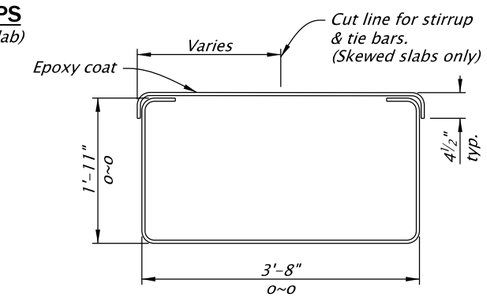

#4 STIRRUP & TIE

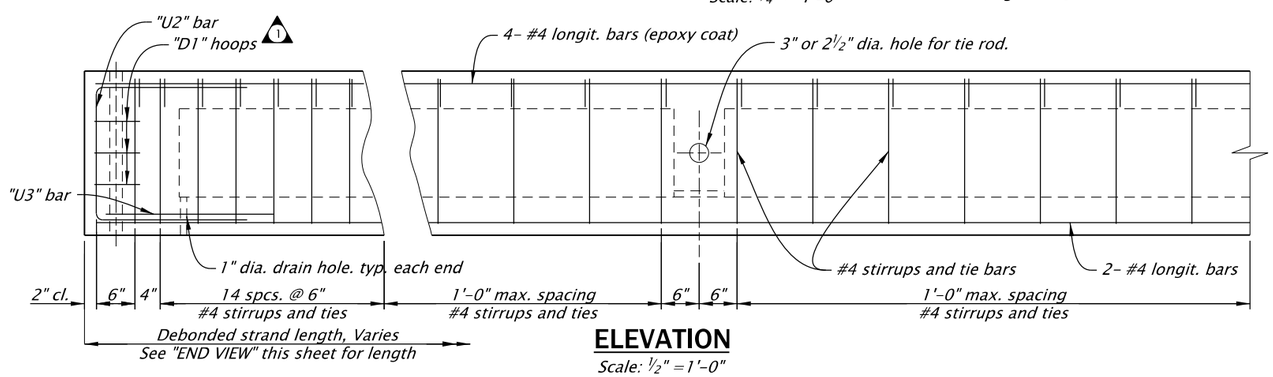

ELEVATION
Scale: ½" = 1'-0"

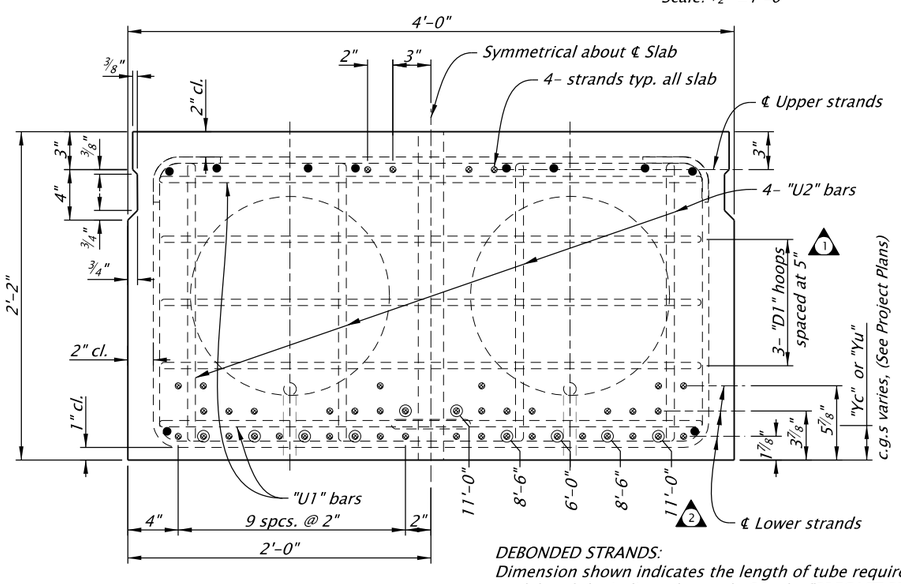

END VIEW
Scale: 1" = 1'-0"

DEBONDED STRANDS:
Dimension shown indicates the length of tube required, at both ends, to debond the indicated strand. See the "PRECAST PRESTRESSED SLAB SCHEDULE" in the project plans for the strand pattern detail.
Detension strands in order of increasing tube length shown.

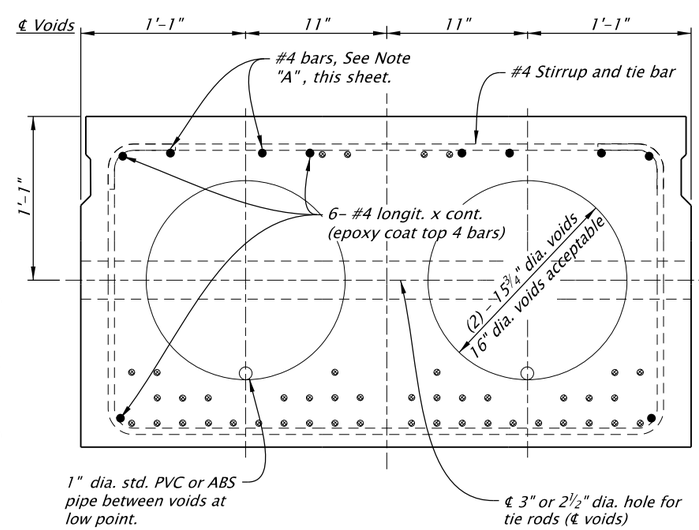

MIDSPAN VIEW
Scale: 1" = 1'-0"

Accompanied by dwg. BR445

CALC. BOOK NO. -

SDR DATE 02-July-2020

NOTE: All material and workmanship shall be in accordance with the current Oregon Standard Specifications

The selection and use of this Standard Drawing, while designed in accordance with generally accepted engineering principles and practices, is the sole responsibility of the user and should not be used without consulting a Registered Professional Engineer.

OREGON STANDARD DRAWINGS

26" PRECAST PRESTRESSED SLAB

2021

	DATE	REVISION DESCRIPTION
1	July/2020	Added end zone reinf.
2	July/2020	Revised debonded length.
	July/2020	Updated drawing to current stds.
	-	-
	-	-

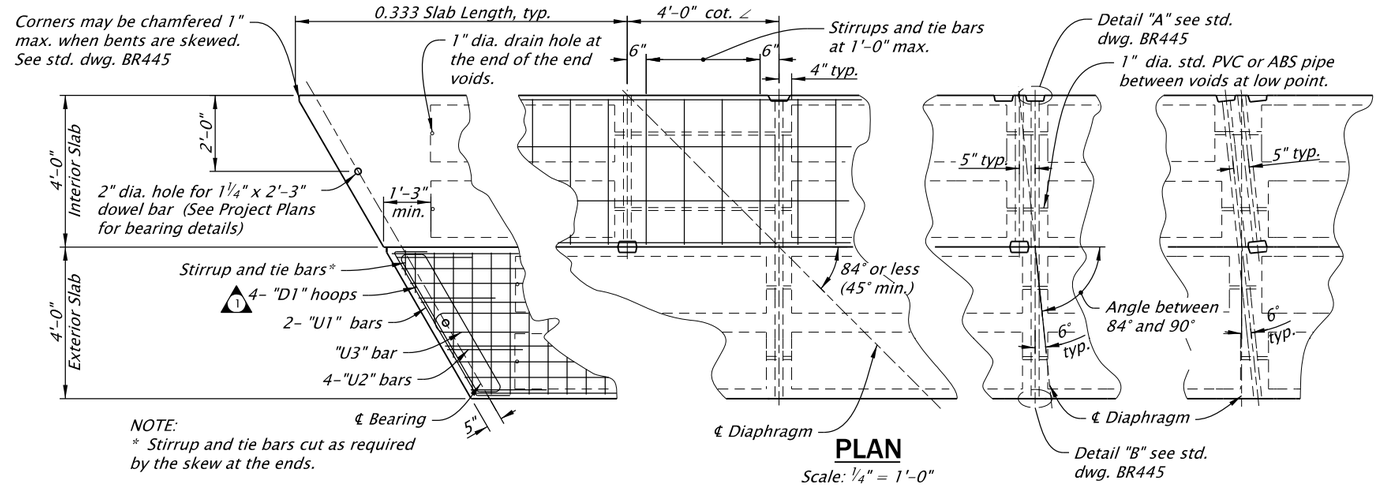

PLAN

Scale: ¼" = 1'-0"

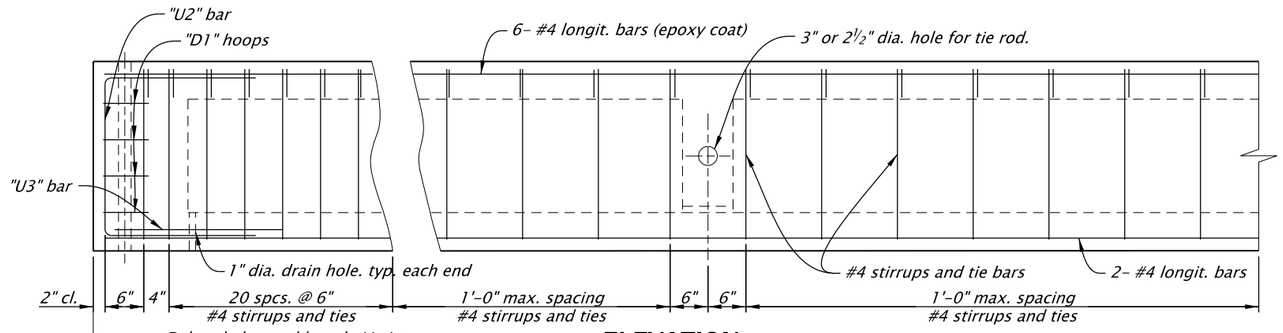

ELEVATION

Scale: ½" = 1'-0"

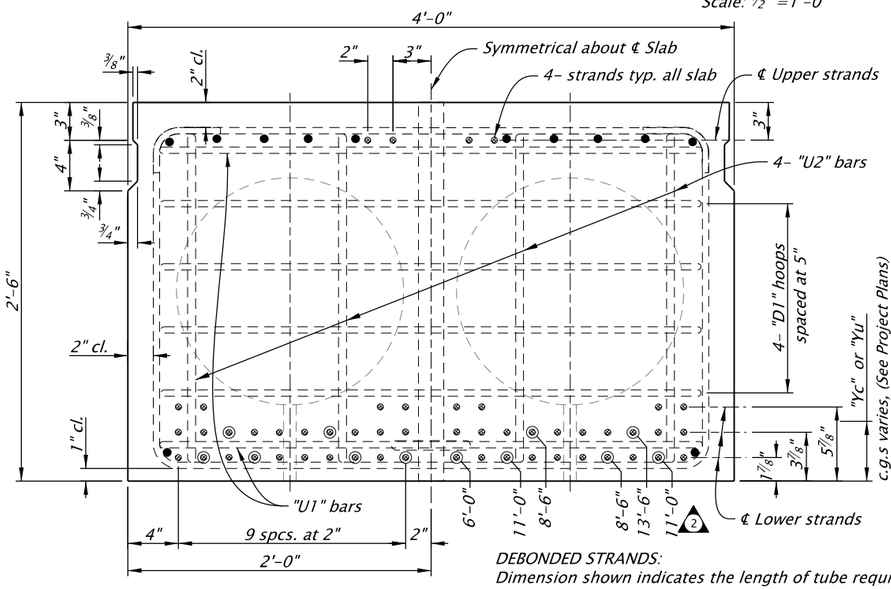

END VIEW

Scale: 1" = 1'-0"

DEBONDED STRANDS:
Dimension shown indicates the length of tube required, at both ends, to debond the indicated strand. See the "PRECAST PRESTRESSED SLAB SCHEDULE" in the project plans for the strand pattern detail.
Detension strands in order of increasing tube length shown.

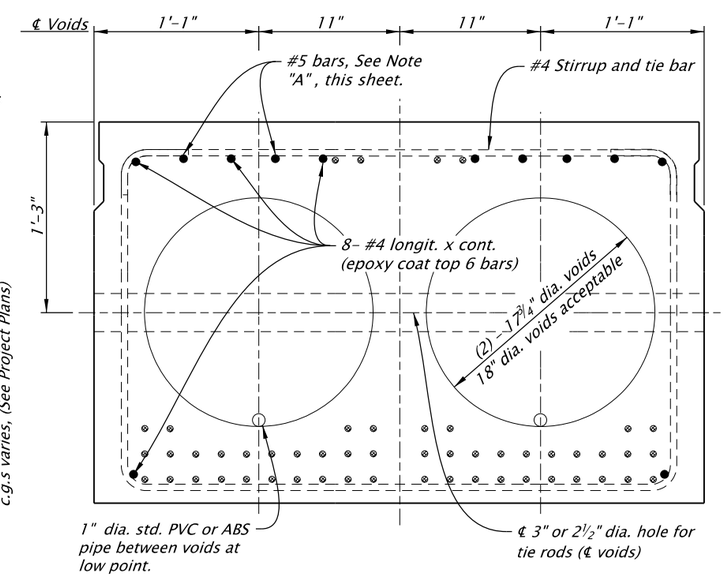

MIDSPAN VIEW

Scale: 1" = 1'-0"

NOTE "A" (Slab End Bars)
2- #5 x 10'-0", slabs 2 and 3
4- #5 x 10'-0", slabs 4, 5 and 6
4- #5 x 12'-6", slabs 7, 8 and 9
4- #5 x 15'-0", slabs 10, 11, 12 and 13
Place bars each end of each slab (Epoxy coat).

NOTE:
Grout keyway as specified in General Notes.
Omit keyway on exterior side of exterior slabs.
Keyway is continuous.

SECTION PROPERTIES

Area =	938 in²
c.g. =	14.91 in
I =	97,278 in⁴
St =	6447 in³
Sb =	6524 in³
Weight =	1009 lbs/ft
J =	180,800 in⁴
K =	0.80
V/S =	6.01
Form wt = (tubes)	27 lbs/ft
Total wt w/forms=	1036 lbs/ft

Diaphragm Weight

No Skew	550 lb
15° Skew	900 lb
30° Skew	1560 lb
45° Skew	2380 lb

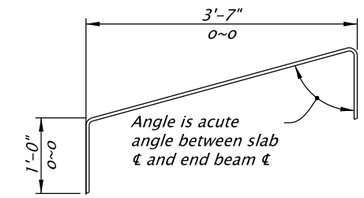

#4 "U1" BAR

(4- required per slab)

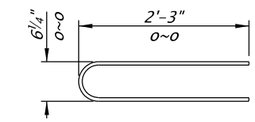

#6 "U3" BAR (A706)

(2- required per slab)

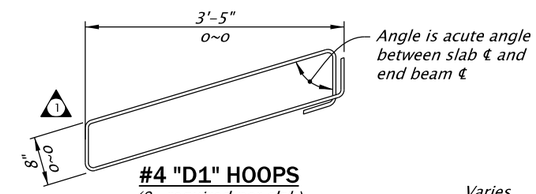

#4 "D1" HOOPS

(8- required per slab)

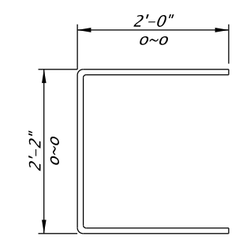

#5 "U2" BAR

(8- required per slab)

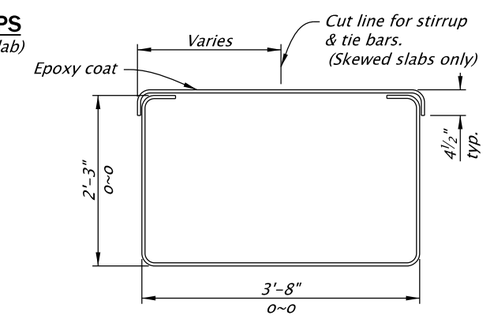

#4 STIRRUP & TIE

Accompanied by dwg. BR445

CALC. BOOK NO. -

SDR DATE 02-July-2020

NOTE: All material and workmanship shall be in accordance with the current Oregon Standard Specifications

The selection and use of this Standard Drawing, while designed in accordance with generally accepted engineering principles and practices, is the sole responsibility of the user and should not be used without consulting a Registered Professional Engineer.

OREGON STANDARD DRAWINGS

30" PRECAST PRESTRESSED SLAB

2021

	DATE	REVISION DESCRIPTION
1	July/2020	Added end zone reinf.
2	July/2020	Revised debonded lengths and locations.
	July/2020	Updated drawing to current stds.
	-	-
	-	-

BR422

Effective Date: December 1, 2020 - May 31, 2021

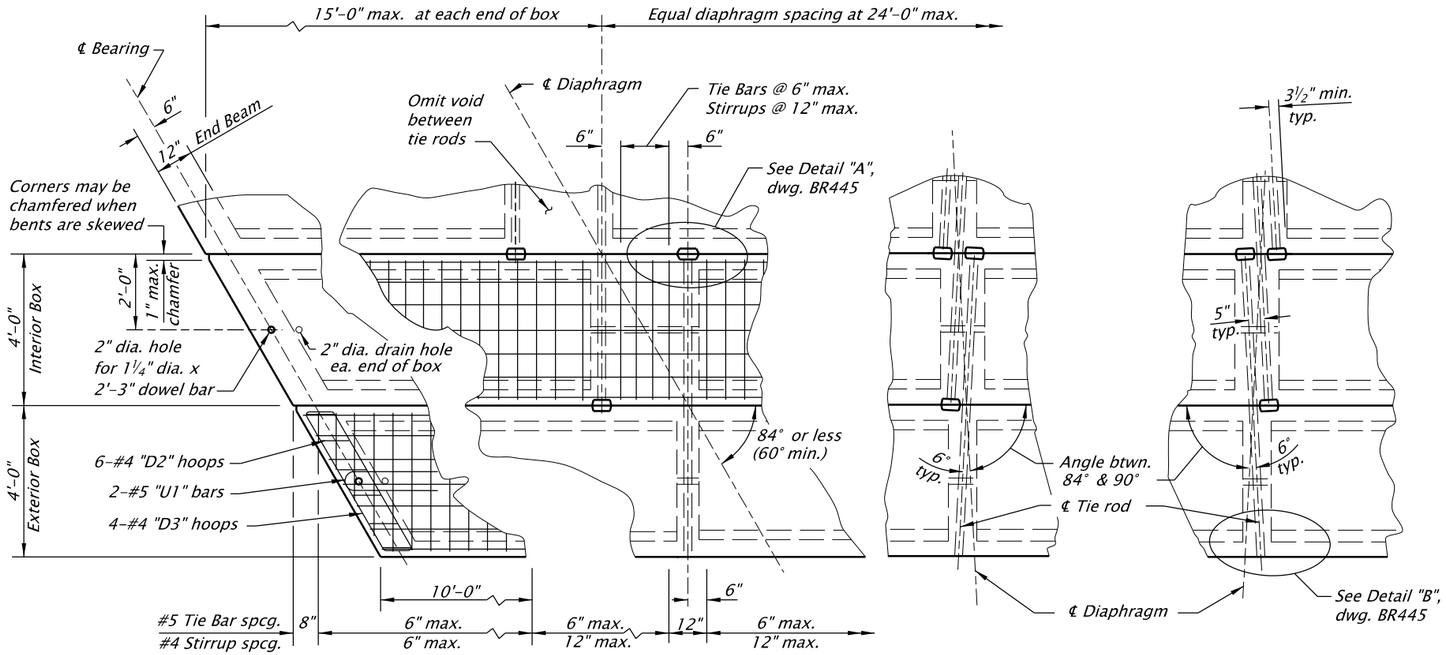

PARTIAL PLAN

Note
Cut transverse bars as required by skew.

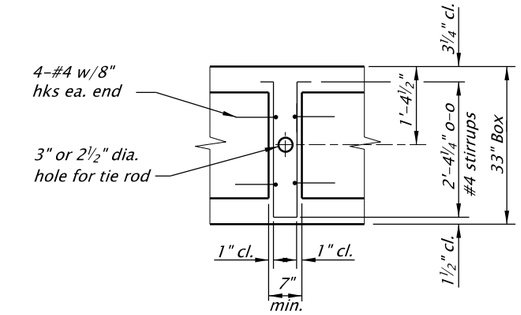

DIAPHRAGM BEAM

SECTION PROPERTIES
Area = 753 in²
c.g.= 16.33 in
I = 110,540 in⁴
St = 6631 in³
Sb = 6770 in³
Weight = 816 lbs/ft
(Box weight of 155 lbs/ft³ plus stay-in-place form weight of 6 lbs/ft)
J = 230,350 in⁴
K = 0.79

Note
St. Venant's torsional inertia is based on a refined section analysis.

Note
Grout keyway as specified in General Notes. Omit keyway on exterior side of exterior boxes. Keyway is continuous.

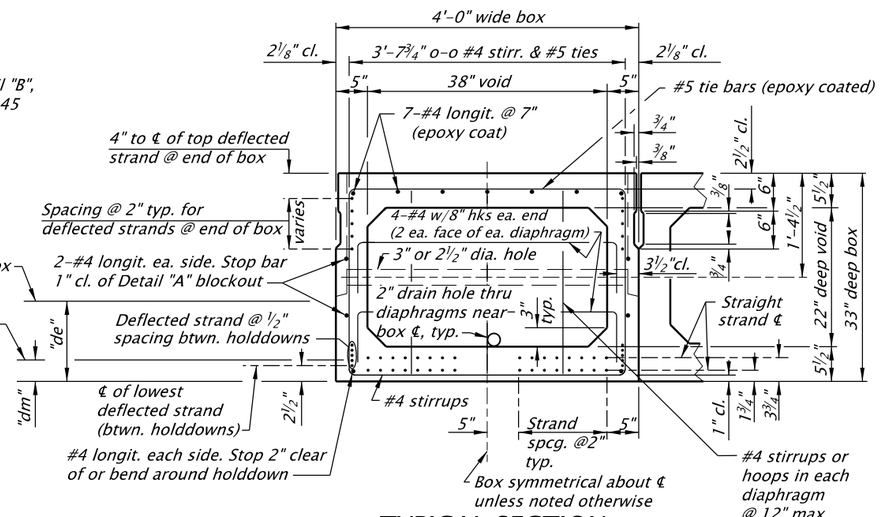

TYPICAL SECTION

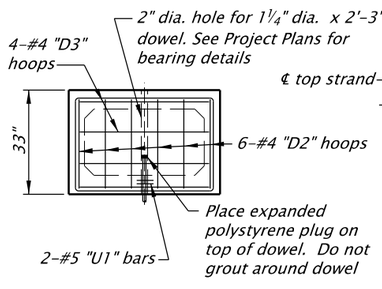

END ELEVATION

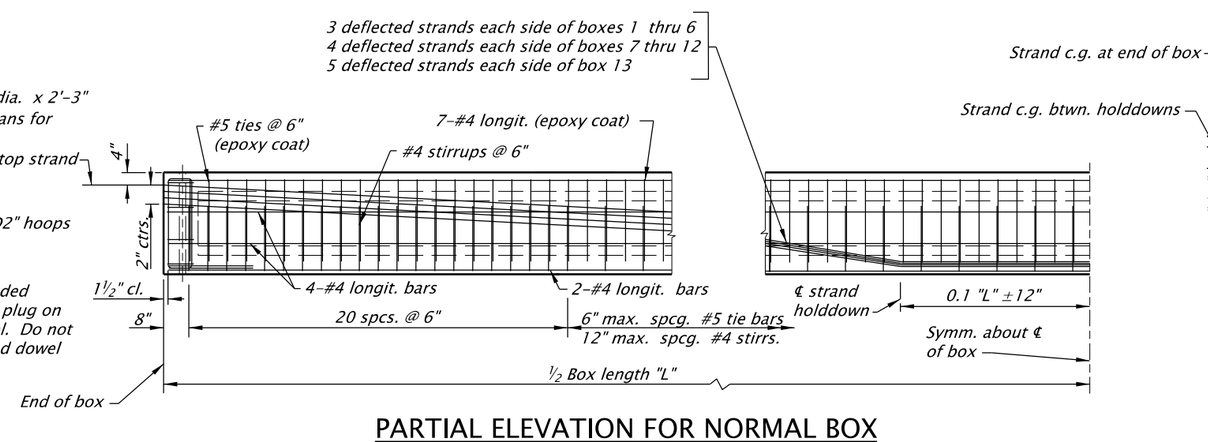

PARTIAL ELEVATION FOR NORMAL BOX

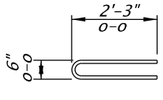

#5 "U1" BAR (A706)
(4-req'd per box)

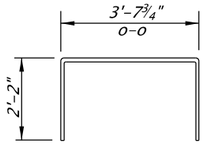

#5 TIE BAR
(epoxy coat)
(Splice w/ #4 Stirrup)

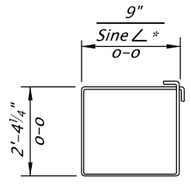

#4 "D2" HOOPS
(12-req'd per box)

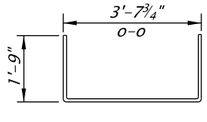

#4 STIRRUP

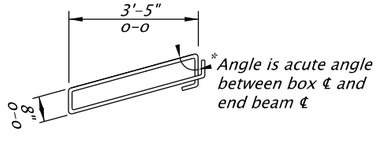

#4 "D3" HOOPS
(8-req'd per box)

Accompanied by dwg. BR445

CALC. BOOK NO. –

SDR DATE 20-April-2018

NOTE: All material and workmanship shall be in accordance with the current Oregon Standard Specifications

The selection and use of this Standard Drawing, while designed in accordance with generally accepted engineering principles and practices, is the sole responsibility of the user and should not be used without consulting a Registered Professional Engineer.

OREGON STANDARD DRAWINGS

33" PRECAST PRESTRESSED BOX

2021

DATE	REVISION DESCRIPTION
–	–
–	–
–	–
–	–
–	–

br425.dgn 06-2017

BR425

br500.dgn 05-2020

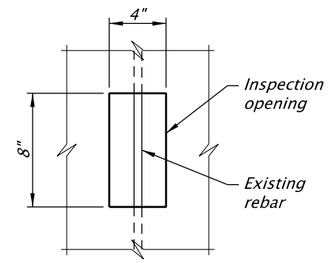

NOTE:
For locations that are questionable to the extent of rebar corrosion damage

EXPLORATION TEST AREA

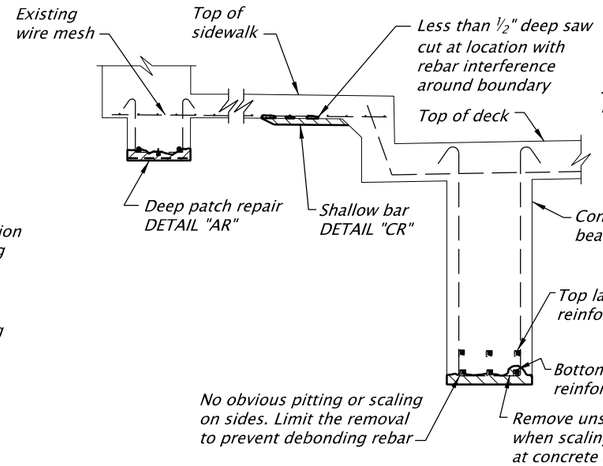

SIDEWALK SECTION

Legend:

- Remove unsound concrete area
- Mortar buildup area

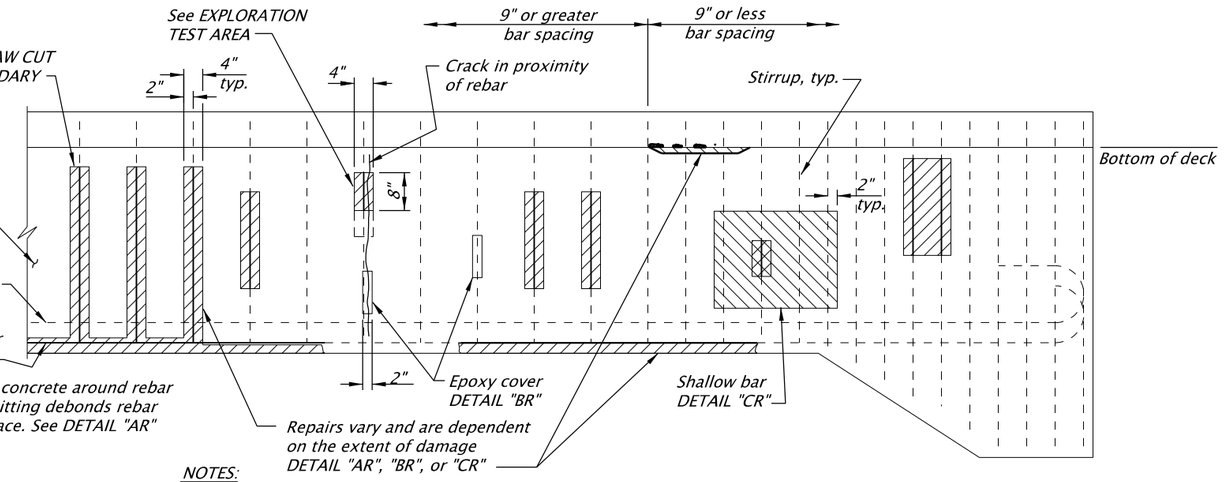

NOTES:

- Elevation and section is representative of the types of repairs and does not show exact locations.
- Bottom of deck or walkway horizontal repairs are similar to representative beam vertical surface repairs.
- Reinforcing bar repair see Standard Drawing BR505.
- Blast clean both concrete surface and rebar per Specification Subsection 00542.46 (1235.43) before restoring concrete cover. Blast clean prior to application for epoxy or mortar buildup.

BEAM ELEVATION

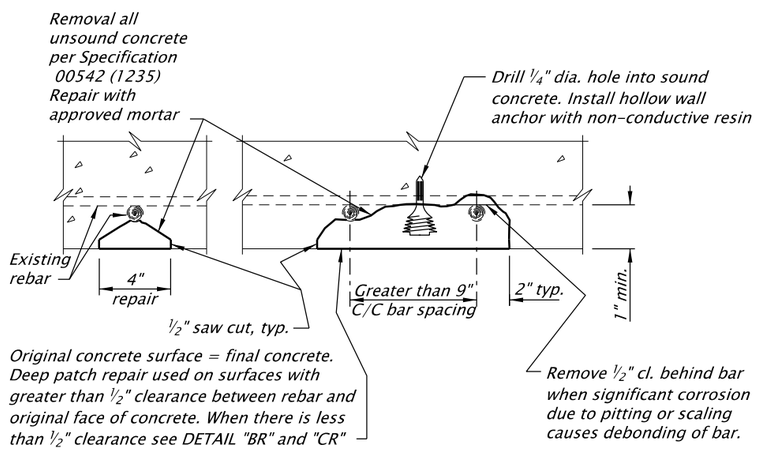

DETAIL "AR" – DEEP PATCH REPAIR

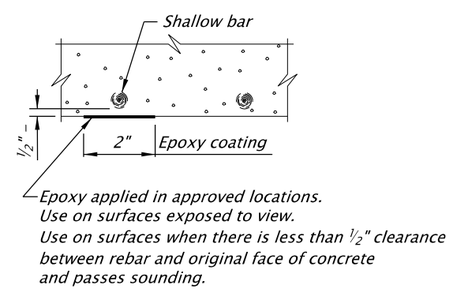

DETAIL "BR" – SHALLOW BAR WITH EPOXY COATING

NOTE:
Blast clean both concrete surface and rebar per Spec. Subs. 00542.46 (1235.43) before restoring concrete cover or buildup. 1

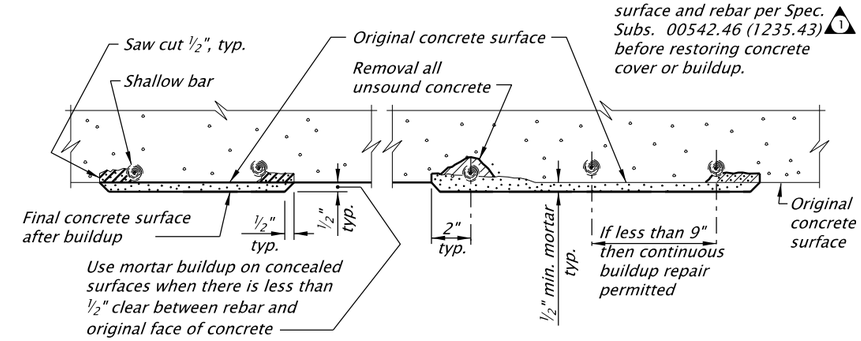

DETAIL "CR" – SHALLOW BAR WITH MORTAR BUILDUP

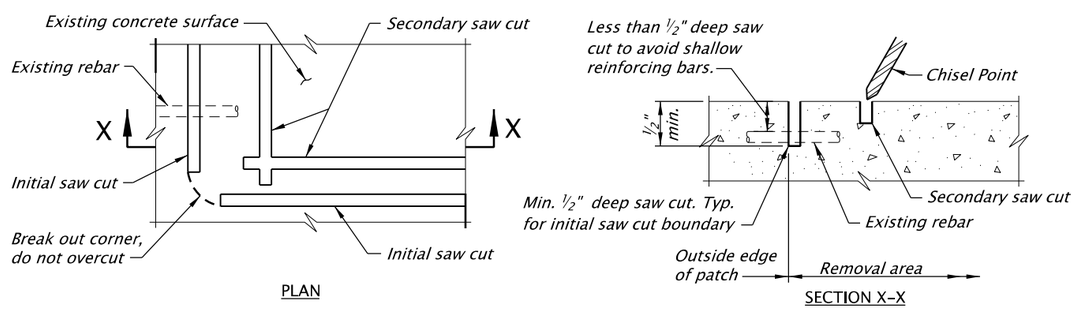

SAW CUT BOUNDARY

NOTE:
Optional saw cut procedure to prevent spalling of sound concrete outside of initial saw cut boundary. See Spec. Subs. 00542.42 (1235.42) 1

Accompanied by dwg. BR505

CALC. BOOK NO. -	SDR DATE 01-July 2020
The selection and use of this Standard Drawing, while designed in accordance with generally accepted engineering principles and practices, is the sole responsibility of the user and should not be used without consulting a Registered Professional Engineer. 1	NOTE: All material and workmanship shall be in accordance with the current Oregon Standard Specifications

OREGON STANDARD DRAWINGS

CONCRETE REPAIR

2021

DATE	REVISION DESCRIPTION
July/2020	Updated Specifications
–	–
–	–
–	–
–	–

BR500

Effective Date: December 1, 2020 - May 31, 2021

ILLUMINATION CONTROL CABINETS

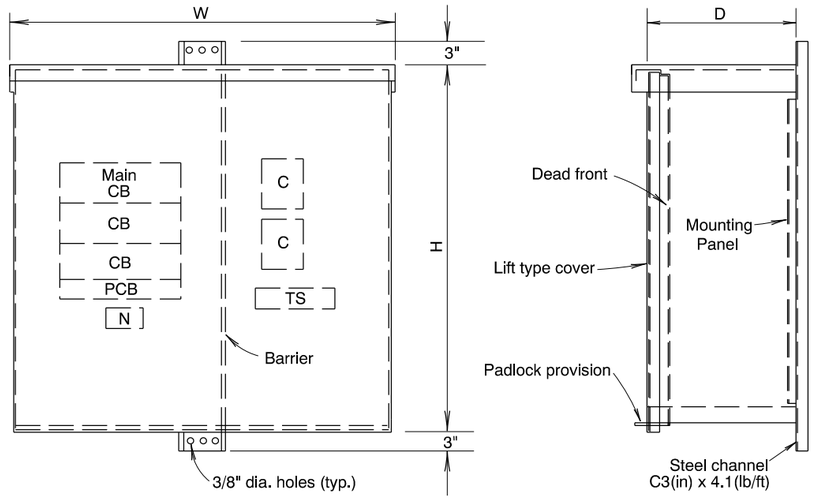

2P or 3 P CB	1P CB	Cont.	Neut.	Test S.W.	W	H	D
2	1	1	1	1	20"	16"	8"
3	1	2	1	1	20"	20"	8"
4	1	3	1	1	20"	24"	8"

- Type "A" cabinet
- Can accomodate 1 to 3 contactors (30 amp max.) Make cabinet depth 10" when 60 or 100 amp contactor is specified.

CABINET NO. 1

No Scale

GENERAL NOTES

- Type "A" cabinet has a top hinged lift cover with provision to hold cover in open position.
- Type "B" cabinet has cover hinged on left or right side with catch and handle.
- All enclosures shown on this drwg. shall bear a U. L. label reading: "CUTOUT BOX" (Raintight)
- Cabinets formed from 10 Gage thick sheet metal. Hot dip galvanized after fabrication or 12 gage type 304 or 306 stainless steel.
- Dimensions are based on the following frame sizes:
  - "TEB" for 240 v. rating
  - "TED" for 277, 480 and 600 v. rating
- All internal wiring, except field wires, shall be done by a U.L. listed facility.
- Deadfronts may be fabricated from code thickness galvanized sheet metal or type 304 or 316 stainless steel.
- For galvanized sheet metal deadfronts:
  - Cut edges shall be treated with zinc-rich paint.
  - They shall be primed with vinyl wash primer and finished with exterior polyurethane enamel.
  - The color shall be Medium Gray that matches Federal Standard 595C color # 26270.
- Install copper buss bars for main and branch circuits.
- Provide 2 (min.) locater studs near top for dead fronts, and handle (finger) on dead front near bottom.

CB = Circuit Breaker
C = Contactor
N = Neutral Block (copper)
TS = Test Switch
PCB = Photocell Circuit Breaker

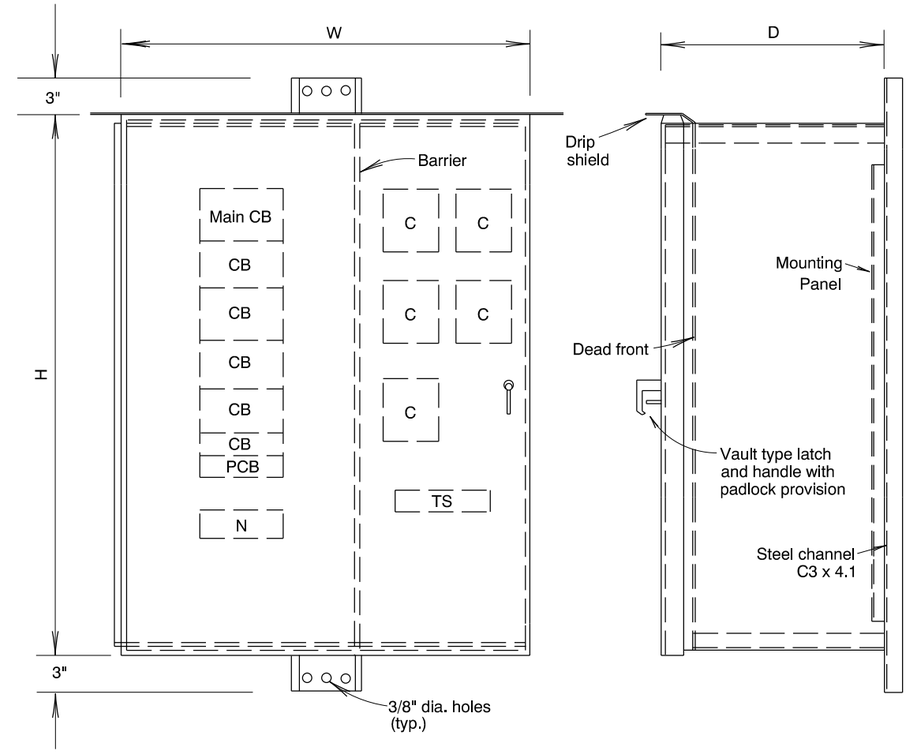

- Type "B" cabinet
- Can accomodate 4 to 6 contactors (30 amp max.) Make cabinet depth 10" when 60 or 100 amp contactor is specified.

2P or 3 P CB	1P CB	Cont.	Neut.	Test S.W.	W	H	D
5	1	4	1	1	24"	28"	8"
6	1	5	1	1	24"	32"	8"
7	1	6	1	1	24"	36"	8"

CABINET NO. 2

No Scale

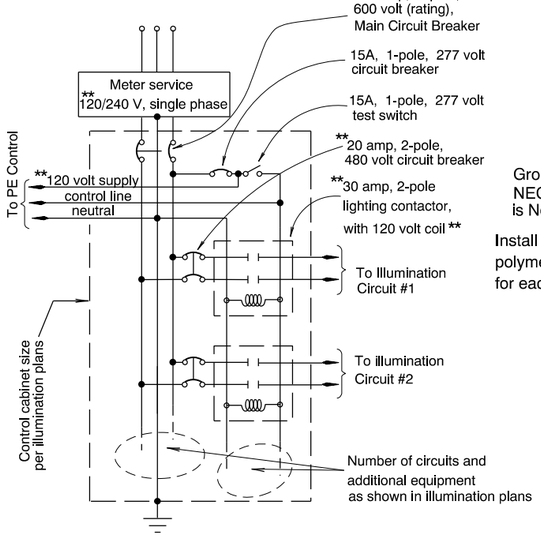

WIRING DIAGRAM
SERVICE & CONTROL CABINETS

** Electrical service voltage, equipment voltage and rating, breaker sizes are per illumination plans. Specific wiring diagram for each cabinet shall be shown in illumination plans and checked by Engineer.

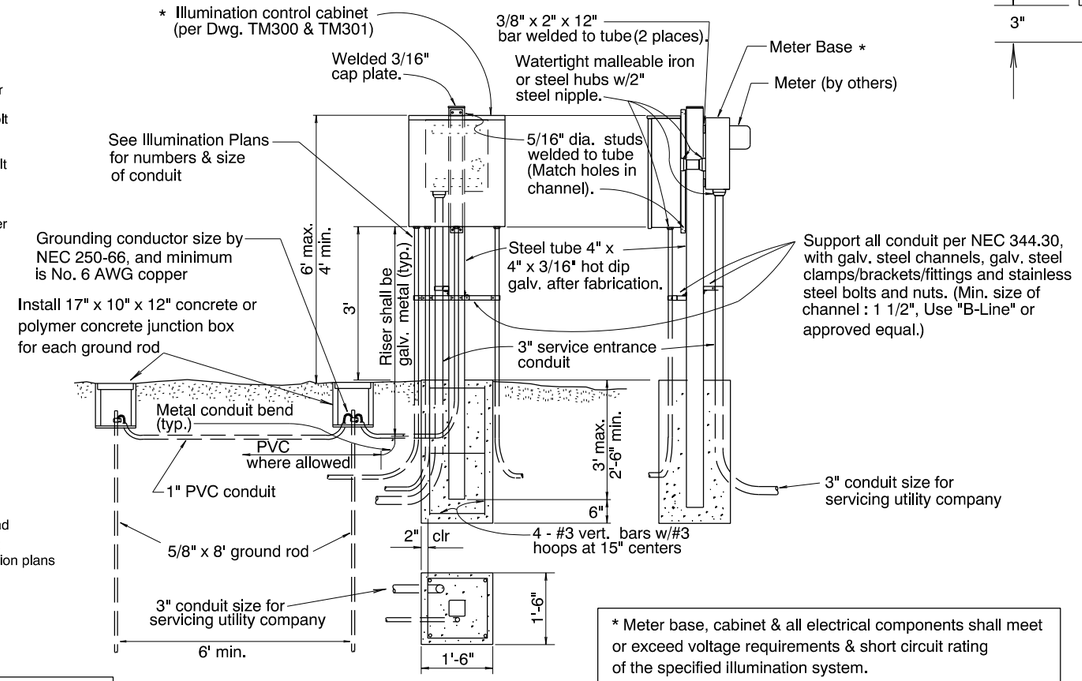

* Meter base, cabinet & all electrical components shall meet or exceed voltage requirements & short circuit rating of the specified illumination system.

POST MOUNT ILLUMINATION CABINET

No Scale

CALC. BOOK NO. N/A	SDR DATE JUN. 16, 2020
The selection and use of this Standard Drawing, while designed in accordance with generally accepted engineering principles and practices, is the sole responsibility of the user and should not be used without consulting a Registered Professional Engineer.	NOTE: All material and workmanship shall be in accordance with the current Oregon Standard Specifications
	OREGON STANDARD DRAWINGS ILLUMINATION CONTROL CABINETS 2021

DATE	REVISION DESCRIPTION

TM 300

tm300.pl1 :: Default 6/30/2020 10:06:23 AM hwye09z

Effective Date: December 1, 2020 - May 31, 2021 1:1200 - 001 TM 300

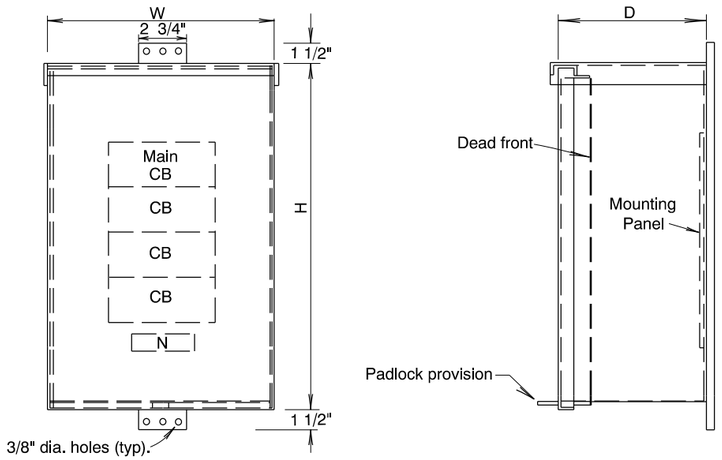

- Type -"A" cabinet (Except as noted in table below)
- Make cabinet width to 18" when Main breaker is over 100 amps (125A through 225A)

240-480 volt			
2P CB	W	H	D
2	12"	12"	8"
3 or 4	12"	18"	8"
5 or 6	12"	24"	8"

600 volt			
3P CB	W	H	D
2	12"	15"	8"
3 or 4	12"	22"	8"
5 or 6	12"	32"	8"

Type "B" Cabinet

CABINET NO. 3
No Scale

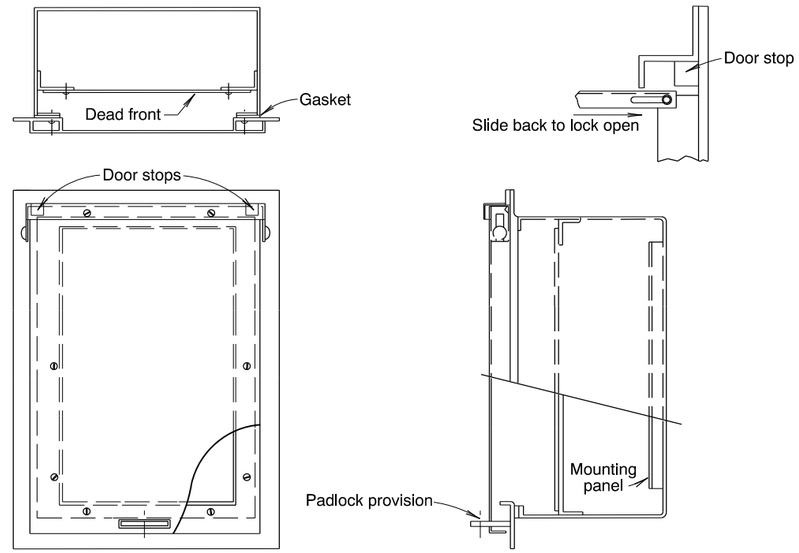

- Type "A" Cabinet
- NEMA 3R construction
- See Cabinet No.1, 3 and 4 for cabinet sizes.

CABINET NO. 5
FLUSH MOUNT CABINET
No Scale

GENERAL NOTES

- Type "A" cabinet has a top hinged lift cover with provision to hold cover in open position.
- Type "B" cabinet has cover hinged on left or right side with catch and handle.
- All enclosures shown on this drwg. shall bear a U. L. label reading: "CUTOUT BOX" (Raintight)
- Cabinets formed from 10 Gage thick sheet metal. Hot dip galvanized after fabrication or 12 Gage thick type 304 or 316 stainless steel
- Dimensions are based on the following frame sizes:
  - "TEB" for 240 v. rating
  - "TED" for 277, 480 and 600 v. rating
- All internal wiring, except field wires, shall be done by a U.L. listed facility.
- Deadfronts may be fabricated from code thickness galvanized sheet metal or type 304 or 316 stainless steel.
- For galvanized sheet metal deadfronts:
  - Cut edges shall be treated with zinc-rich paint.
  - They shall be primed with vinyl wash primer and finished with exterior polyurethane enamel.
  - The color shall be Medium Gray that matches Federal Standard 595C color # 26270.
- Install copper buss bars for main and branch circuits.
- Provide 2 (min.) locater studs near top for dead fronts, and handle (finger) on dead front near bottom.

CB = Circuit Breaker
N = Neutral Block (copper)

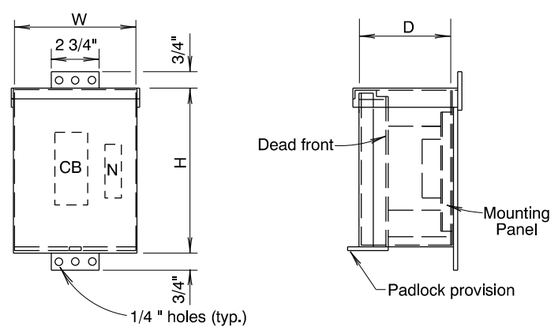

- Type "A" cabinet

CABINET NO. 4
No Scale

240-480 volt or 600 volt				
2P or 3P CB	W	H	D	
1	8"	12"	6"	Not over 100A
1	8"	18"	8"	125A through 225A

CALC. BOOK NO. N/A

SDR DATE JUN. 19, 2020

NOTE: All material and workmanship shall be in accordance with the current Oregon Standard Specifications

The selection and use of this Standard Drawing, while designed in accordance with generally accepted engineering principles and practices, is the sole responsibility of the user and should not be used without consulting a Registered Professional Engineer.

OREGON STANDARD DRAWINGS

ILLUMINATION
CONTROL CABINETS

2021

DATE	REVISION DESCRIPTION

TM 301

PAD-MOUNT ILLUMINATION CONTROL CABINET

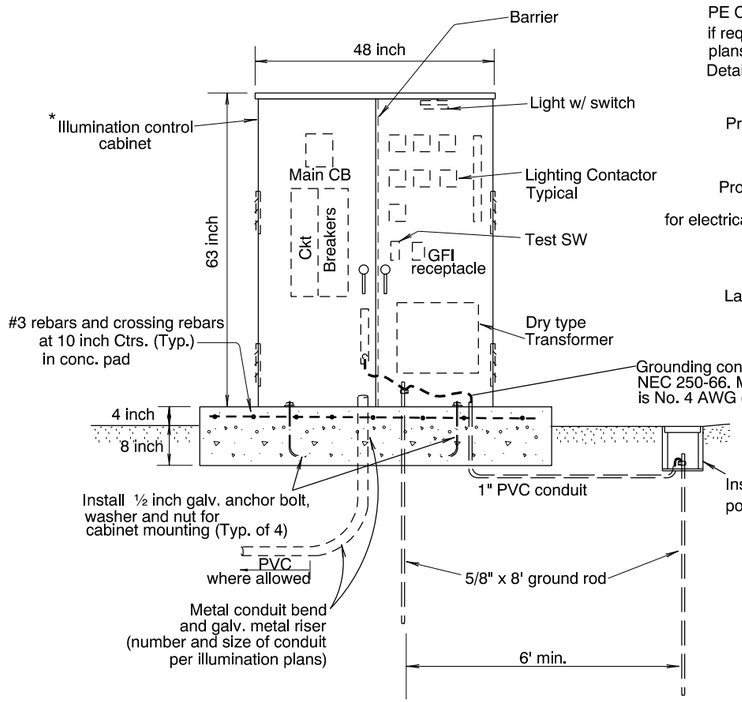

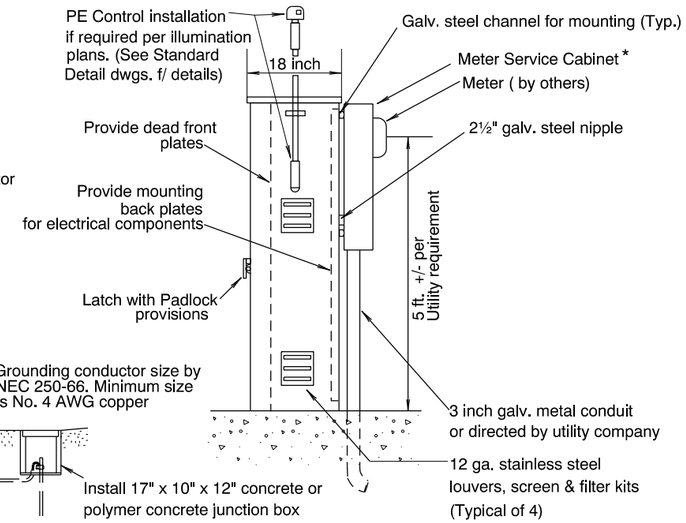

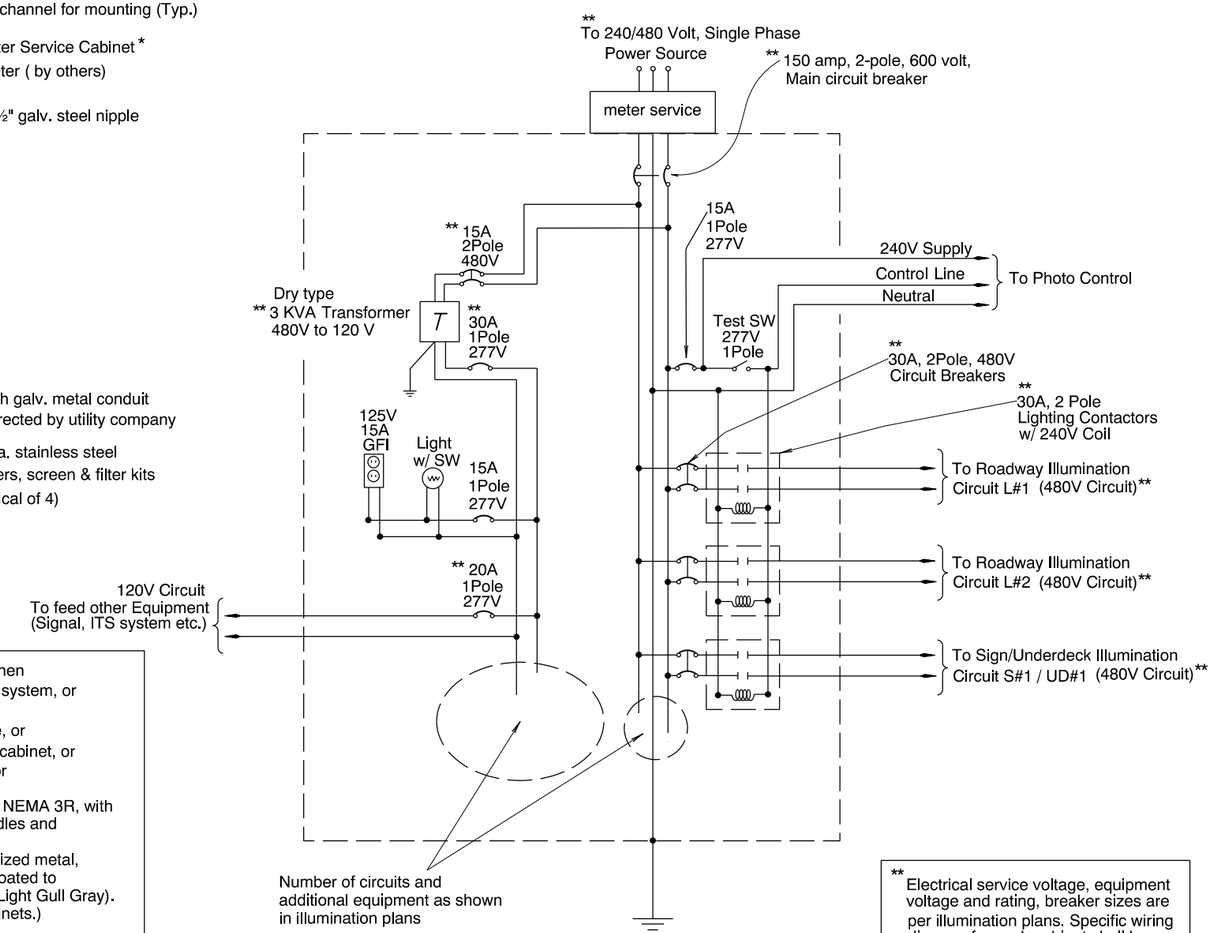

WIRING DIAGRAM
SERVICE & CONTROL CABINETS

** Electrical service voltage, equipment voltage and rating, breaker sizes are per illumination plans. Specific wiring diagram for each cabinet shall be shown in illumination plans and checked by Engineer.

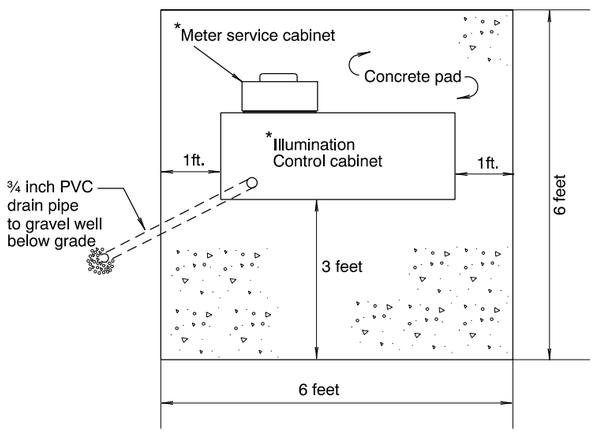

PAD MOUNT ILLUMINATION CABINET
No Scale

* Meter base, cabinet & all electrical components shall meet or exceed voltage requirements & short circuit rating of the specified illumination system.

GENERAL NOTES

- Pad-mount illumination cabinet can be used when
  1. Electrical service has 480 V and/or 3 phase system, or
  2. Main CB is larger than 100 amp, or
  3. The number of branch circuits is six or more, or
  4. Dry type Transformer is installed inside the cabinet, or
  5. More room inside the cabinet is desirable for additional equipment and wiring.
- Pad-mount illumination control cabinet shall be NEMA 3R, with hinged double door, 3 point lockable vault handles and stainless steel hardware.
- Control cabinet formed with 10 gage pregalvanized metal, or 12 gage stainless steel. It shall be powder coated to match Federal Standard 595C color # 26440 (Light Gull Gray). (Painting is not required on stainless steel cabinets.)
- Deadfronts may be fabricated from code thickness galvanized sheet metal or type 304 or 316 stainless steel. Provide stainless steel, turn-and-fold style, dead front latches. (min. 2 per panel)
- All electrical components shall be per ODOT Standards and as shown in illumination plans.
- Install copper buss bars for main and branch circuits.
- All internal wiring, except field wires, shall be done by a U.L. listed facility.
- Cabinet size is nominal. Engineer to verify before ordering.
- For electrical service, coordinate with Utility co. and satisfy all utility requirements.
- Meter service cabinet formed with stainless steel 304, NEMA 3R, UL 67 listed, 600 V, 200 amp with natural finish and test/bypass provision (124 TBSS or approved equal)
- C/T cabinet may be required for bigger electrical service such as 250 amp, 277/480 volt, 3 phase.
- Install cabinet in safe location from vehicle traffic, or provide protection such as barrier, guardrail or (2) 4 ft. metal pole barrier

CB = Circuit Breaker
Ckt = Circuit
GFI = Ground Fault Interupt
SW = Switch
C/T = Current Transformer

CALC. BOOK NO. N/A	SDR DATE JUN. 22, 2020
The selection and use of this Standard Drawing, while designed in accordance with generally accepted engineering principles and practices, is the sole responsibility of the user and should not be used without consulting a Registered Professional Engineer.	NOTE: All material and workmanship shall be in accordance with the current Oregon Standard Specifications
	OREGON STANDARD DRAWINGS PAD-MOUNT ILLUMINATION CONTROL CABINET 2021

DATE	REVISION DESCRIPTION

TM 302

Effective Date: December 1, 2020 - May 31, 2021

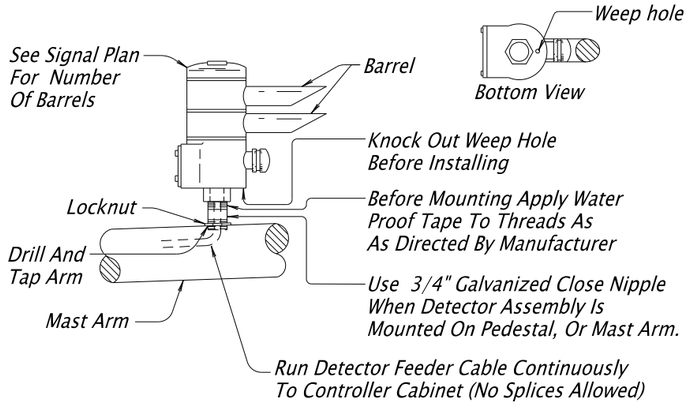

DETAIL "A" FIRE PREEMPTION INSTALLATION

Emitter Units For Vehicles Provided By Others

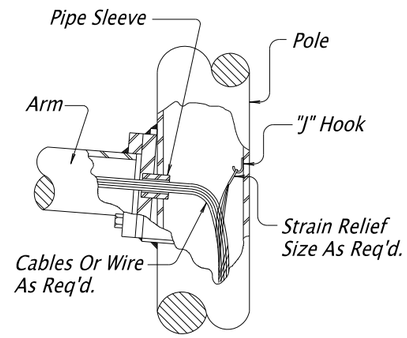

DETAIL "B" MAST ARM CONNECTION

Preinstalled "J" Hooks In Poles For Wire Compression Strain Relief Devices (Cable Grips) At All Access Entrances For Luminaire & Signal Arms.

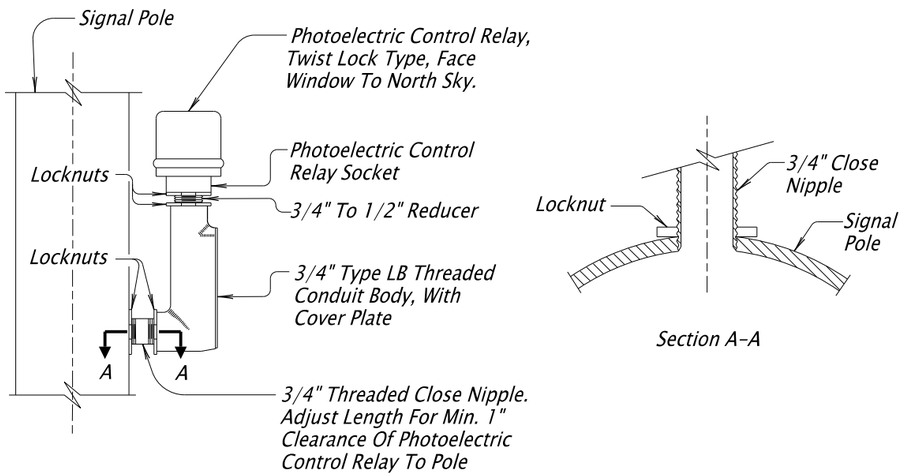

DETAIL "C" PHOTOELECTRIC CONTROL INSTALLATION

General Notes:

1. All Pole Entrances Containing Wiring Shall Be Smooth.
2. All Screws, Bolts, Nuts And Washers Shall Be Type 304 Or 316 Stainless Steel Unless Noted Otherwise.
3. Bolts And Screws Shall Have Square Or Hex Heads. Allen Head Fasteners Not Allowed.

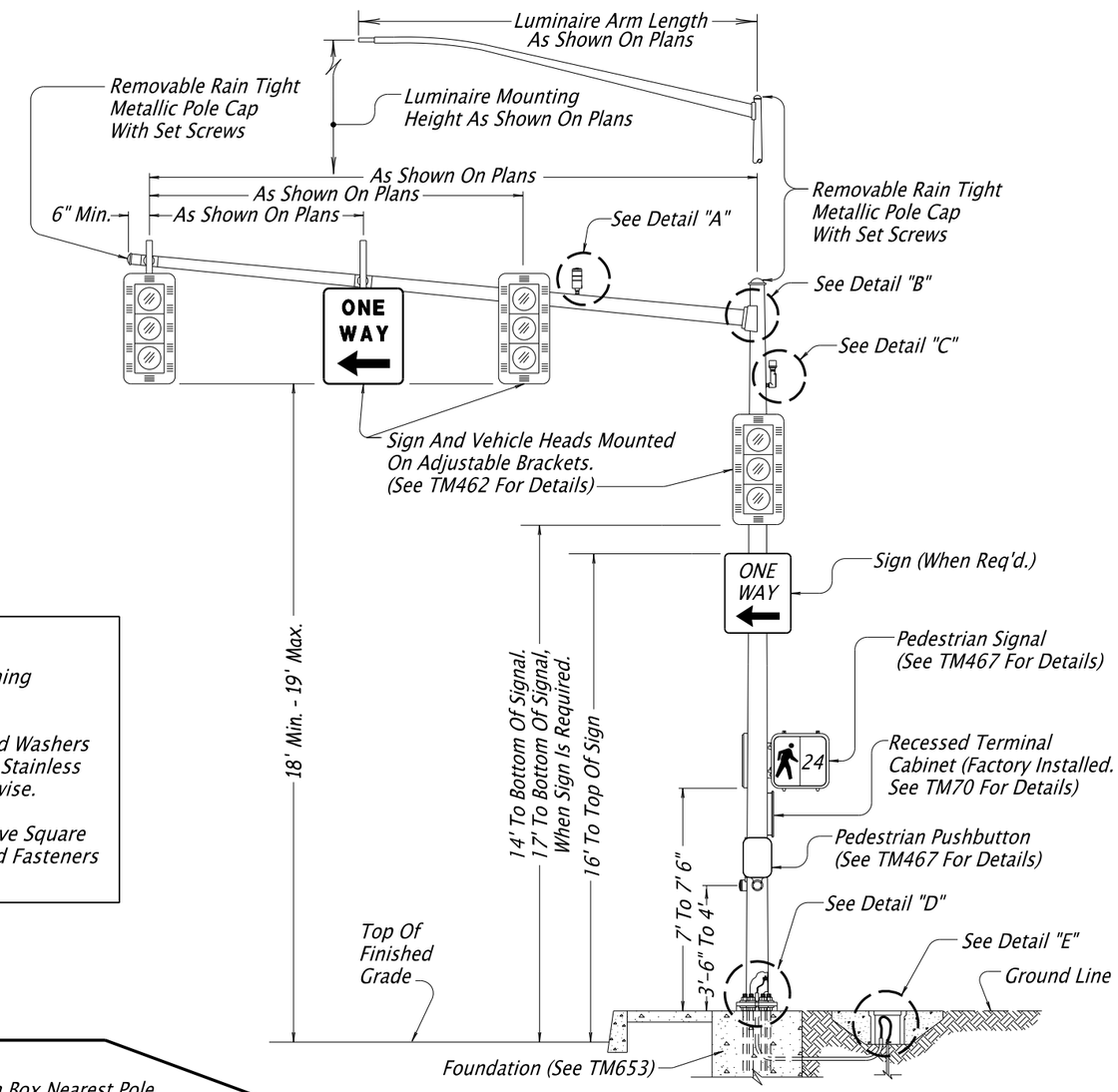

MAST ARM POLE

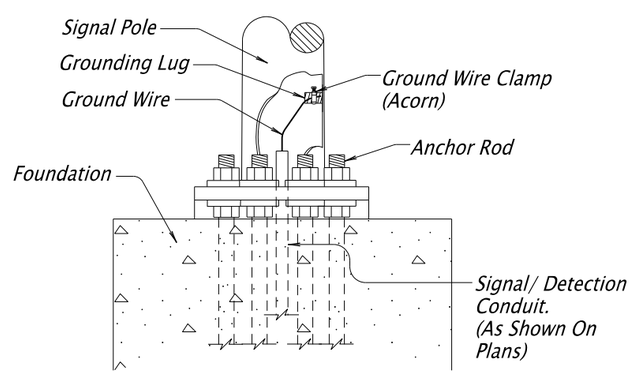

DETAIL "D" INTERIOR GROUND INSTALLATION

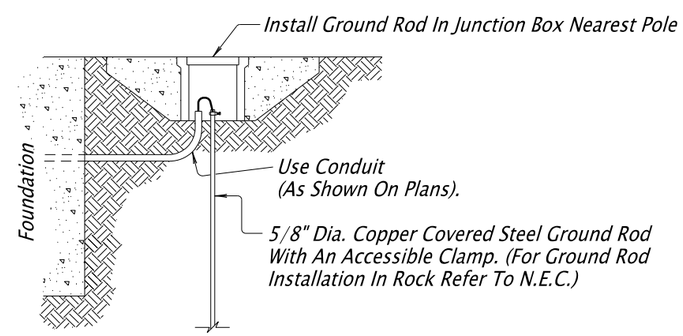

DETAIL "E" GROUND ROD INSTALLATION

Not Applicable For Structure Mounted Poles. See Specifications.

CALC. BOOK NO. N/A

SDR REPORT DATE 2-Jul-2020

NOTE: All material and workmanship shall be in accordance with the current Oregon Standard Specifications

The selection and use of this Standard Drawing, while designed in accordance with generally accepted engineering principles and practices, is the sole responsibility of the user and should not be used without consulting a Registered Professional Engineer.

OREGON STANDARD DRAWINGS

MAST ARM POLE DETAILS

2021

DATE	REVISION DESCRIPTION

TM450

Effective Date: December 1, 2020 - May 31, 2021

General Notes:

1. The Bottom Of Signal Heads Shall Be At The Same Vertical Elevation Above The Roadway. Eyebolts For Span Need Not Be At The Same Elevation.
2. All Screws, Bolts, Nuts And Washers Shall Be Type 304 Or 316 Stainless Steel Unless Noted Otherwise.
3. Bolts And Screws Shall Have Square Or Hex Heads. Allen Head Fasteners Not Allowed.
4. Conduit Mounted On Wood Poles/Posts May Be Liquid Tight Flex Conduit.

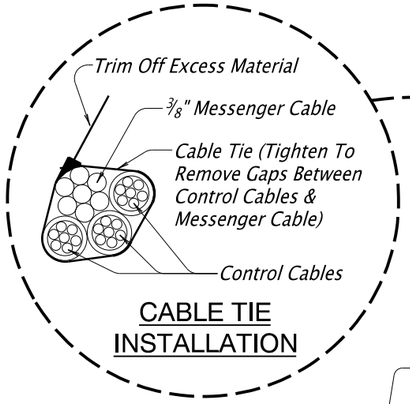

CABLE TIE INSTALLATION

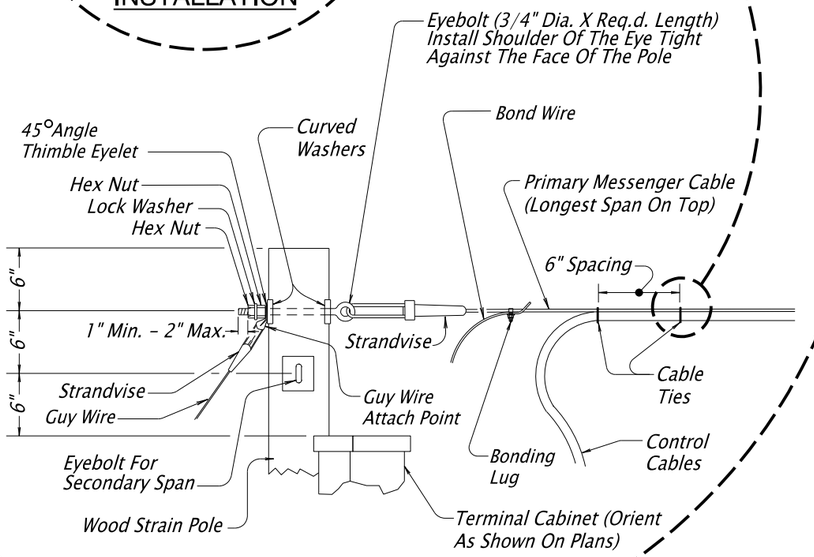

MESSENGER CABLE CONNECTION

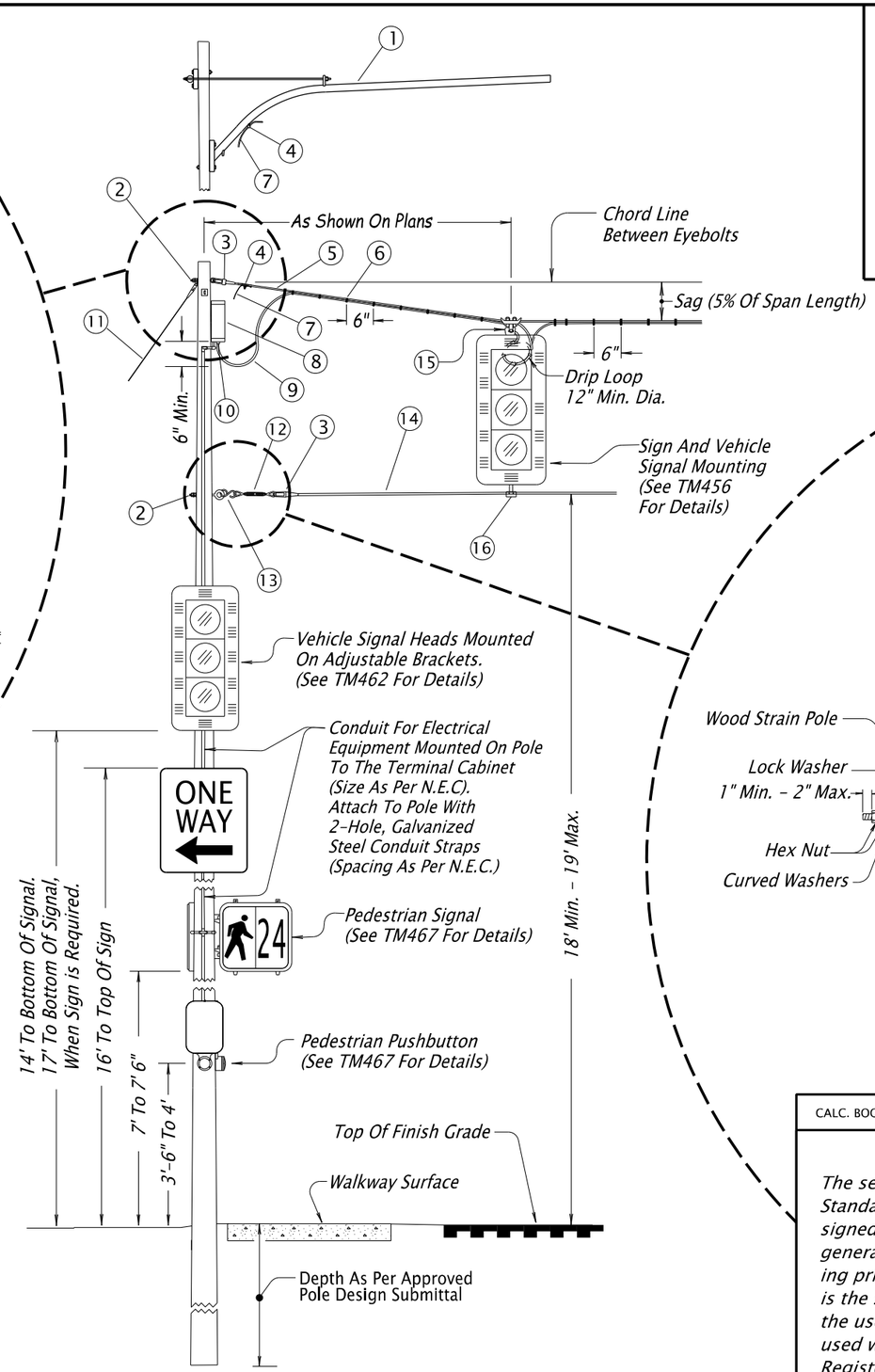

TEMPORARY WOOD STRAIN POLE

TURNBUCKLE

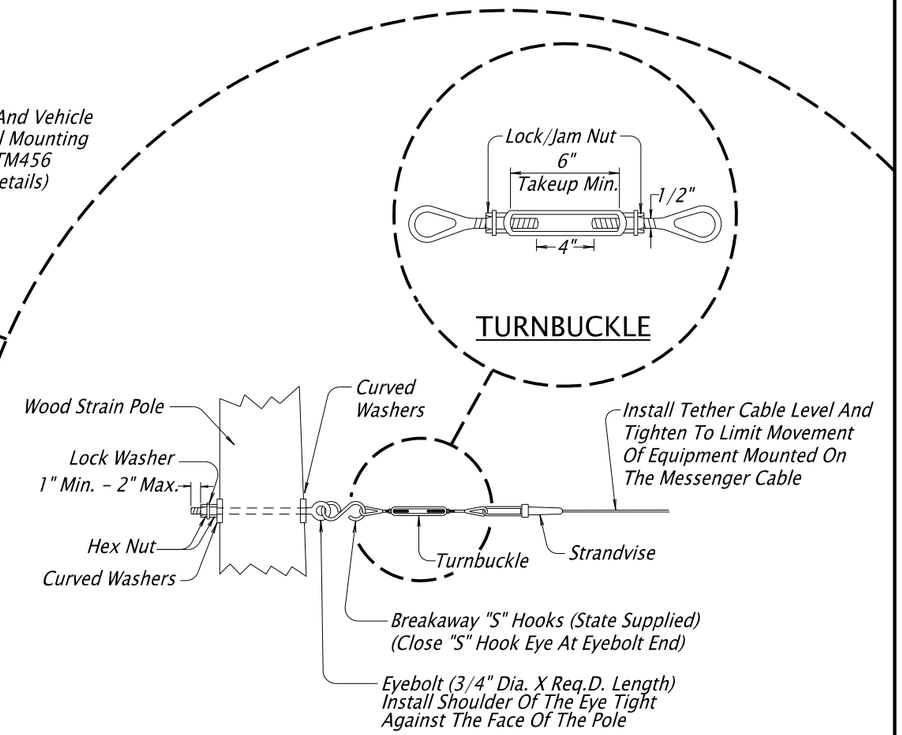

TETHER CABLE CONNECTION

L E G E N D

1. Luminaire Arm (See TM453 For Details)
2. Eyebolt
3. Strandvise
4. Bonding Lug (See TM454 For Details)
5. Messenger cable
6. Cable Ties
7. Bond Wire (See TM454 For Details)
8. Terminal Cabinet (See TM454 For Details)
9. Control Cable
10. Watertight Compression Entrance Fitting
11. Guy Wire (See TM453 For Details)
12. Turnbuckle
13. "S" Hook (State Supplied)
14. Tether Cable
15. Spanwire Hanger (See TM456 For Details)
16. Tether Clamp (See TM456 For Details)

CALC. BOOK NO. N/A

SDR REPORT DATE 2-Jul-2020

NOTE: All material and workmanship shall be in accordance with the current Oregon Standard Specifications

The selection and use of this Standard Drawing, while designed in accordance with generally accepted engineering principles and practices, is the sole responsibility of the user and should not be used without consulting a Registered Professional Engineer.

OREGON STANDARD DRAWINGS

TEMPORARY WOOD STRAIN POLE DETAILS

2021

DATE	REVISION DESCRIPTION

TM452

Effective Date: December 1, 2020 - May 31, 2021

ARM LENGTH	LUM. MAX. WT.	MAX. PROJ. AREA
8' thru 20'	65 lbs.	2 sq. ft.

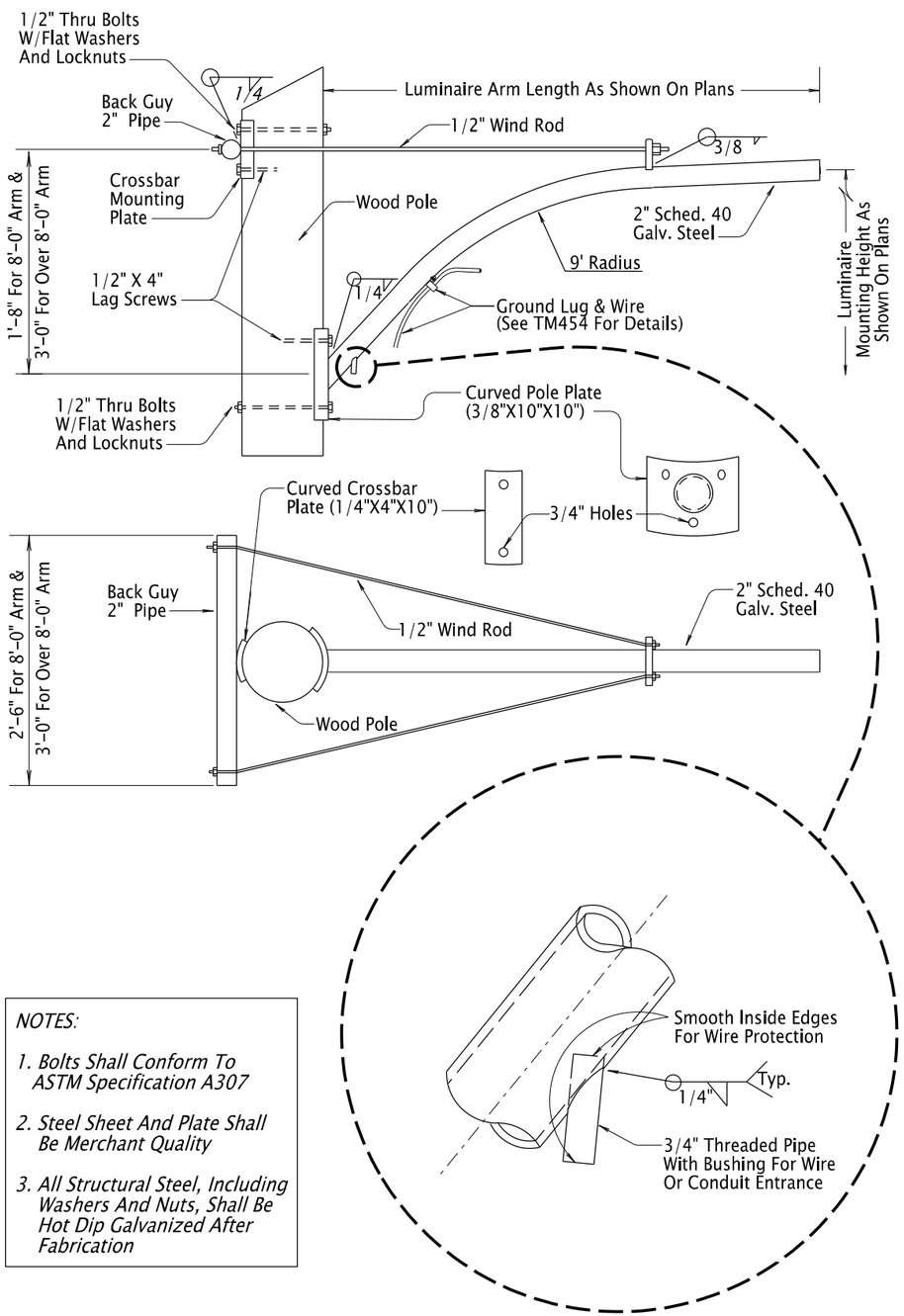

NOTES:

1. *Bolts Shall Conform To ASTM Specification A307*
2. *Steel Sheet And Plate Shall Be Merchant Quality*
3. *All Structural Steel, Including Washers And Nuts, Shall Be Hot Dip Galvanized After Fabrication*

LUMINAIRE ARM INSTALLATION ON WOOD POLE

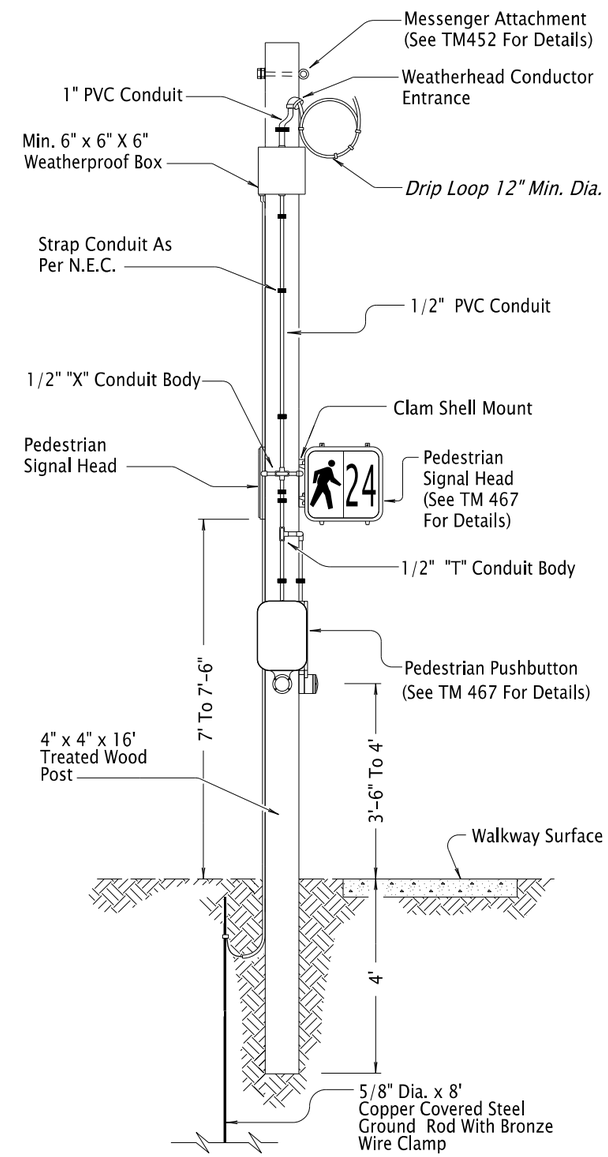

PEDESTRIAN WOOD POST INSTALLATION OVERHEAD CONDUCTORS

GENERAL NOTES:

1. *All Screws, Bolts, Nuts And Washers Shall Be Type 304 or 316 Stainless Steel Unless Noted Otherwise.*
2. *Bolts And Screws Shall Have Hex Or Square Heads. Allen Head Fasteners Not Allowed.*
3. *Conduit Mounted On Wood Poles/Posts May Be Liquid Tight Flex Conduit.*

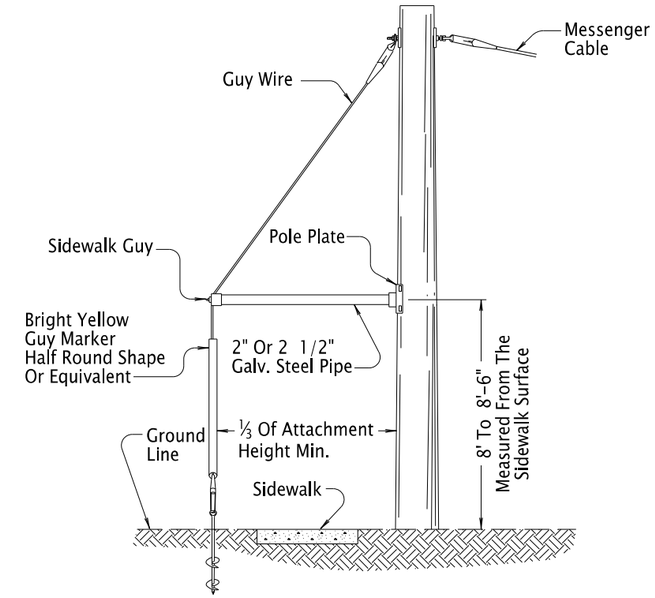

SIDEWALK GUY ANCHOR ASSEMBLY

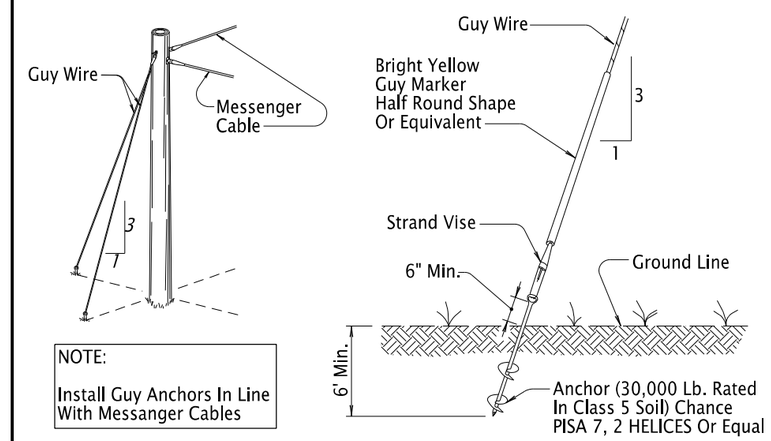

NOTE:

Install Guy Anchors In Line With Messanger Cables

GUY ANCHOR ASSEMBLY

CALC. BOOK NO. N/A

SDR REPORT DATE 2-Jul-2020

NOTE: All material and workmanship shall be in accordance with the current Oregon Standard Specifications

The selection and use of this Standard Drawing, while designed in accordance with generally accepted engineering principles and practices, is the sole responsibility of the user and should not be used without consulting a Registered Professional Engineer.

OREGON STANDARD DRAWINGS

TEMPORARY PEDESTRIAN WOOD POST, GUY WIRE/ANCHOR, & LUMINAIRE ARM DETAILS

2021

DATE	REVISION DESCRIPTION

TM453

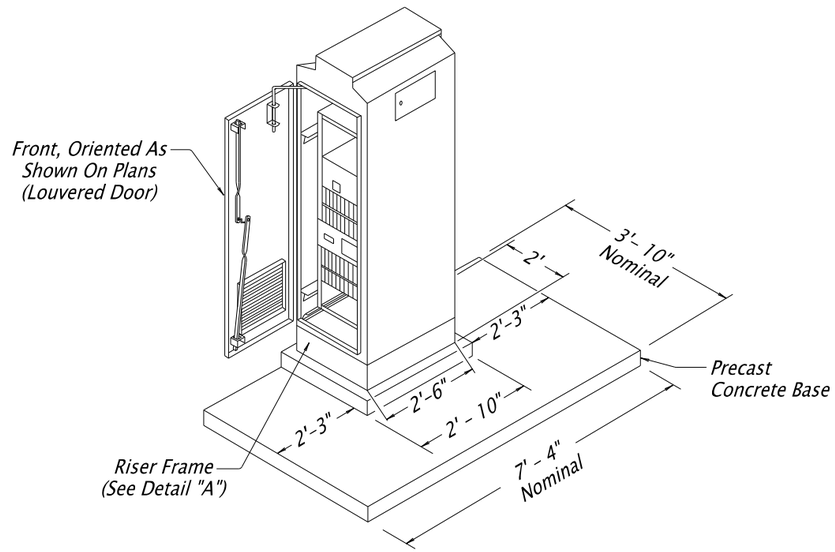

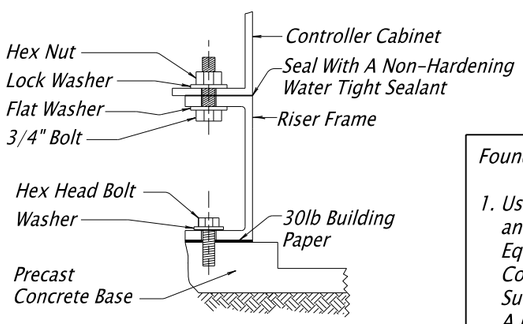

DETAIL "A"
RISER FRAME CONNECTION

Foundation Note:

1. *Use Materials According To 00640.10 and 00640.16. Use Compaction Equipment Suitable For Area And Compact Each Six Inch Layer With Sufficient Coverages To Produce A Firm Unyielding Surface.*

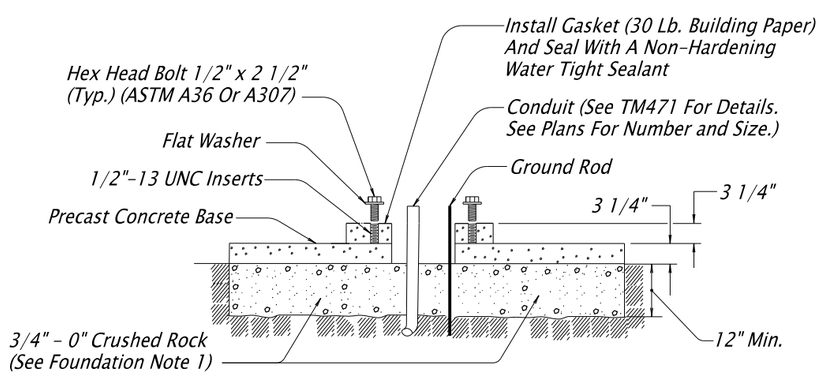

TEMPORARY CONTROLLER CABINET FOUNDATION
(Model 332, 334, And 340 Cabinets)

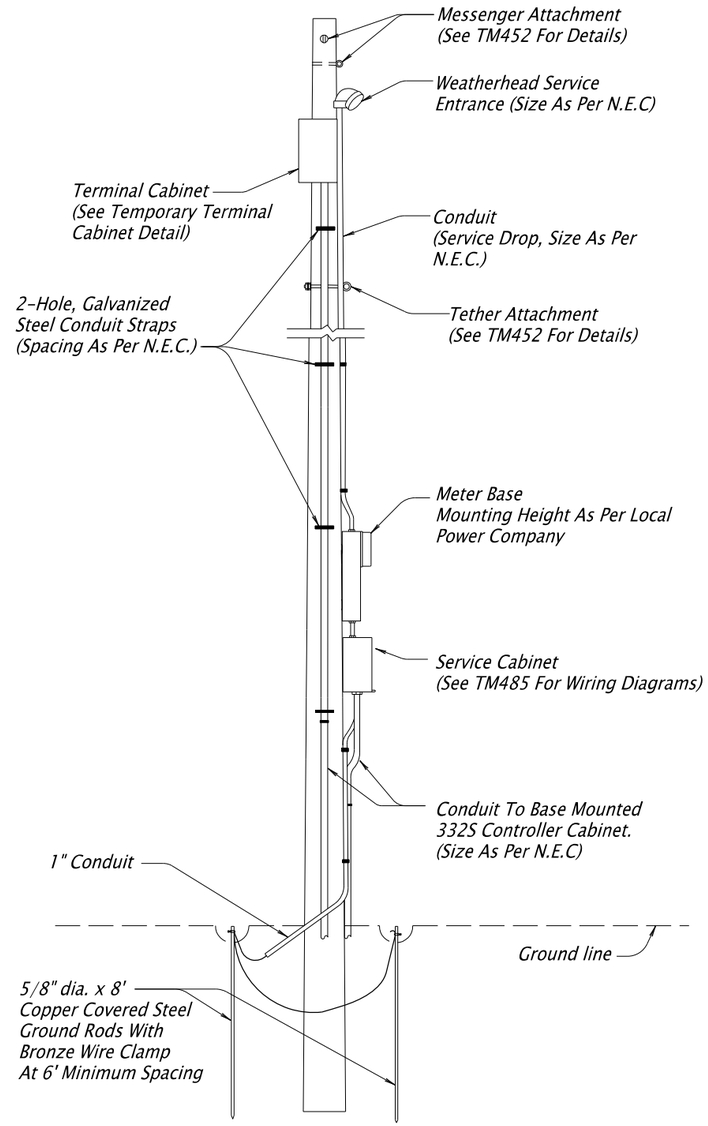

TEMPORARY SERVICE CABINET AND METER BASE

General Notes:

1. *All Screws, Bolts, Nuts And Washers Shall Be Type 304 Or 316 Stainless Steel Unless Noted Otherwise.*
2. *Bolts And Screws Shall Have Hex Or Square Heads. Allen Head Fasteners Not Allowed.*
3. *Conduit Mounted On Wood Poles/Posts May Be Liquid Tight Flex Conduit.*

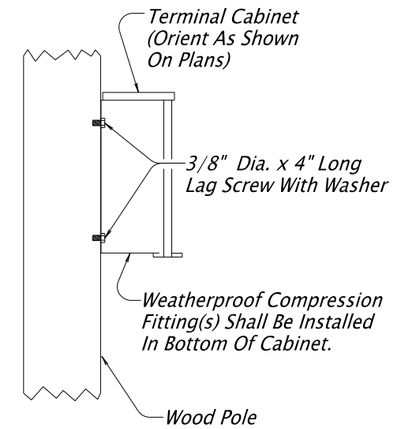

Terminal Cabinet General Notes:

1. *Install The Number Of Terminal Blocks Needed For The Circuits. Evenly Distribute All The Terminal Blocks Among The Mounting Brackets.*
2. *Terminate Only One Wire In Each Termination Point. Use Additional Terminals With A Factory Jumper Between The Terminals If Additional Taps Are Necessary.*
3. *Label The Marking Strip In The Terminal Cabinet With The Wire Number And/Or Letter As Coded In The Controller Cabinet Terminal Block. Use Only Mechanically Printed Labels.*

TEMPORARY TERMINAL CABINET

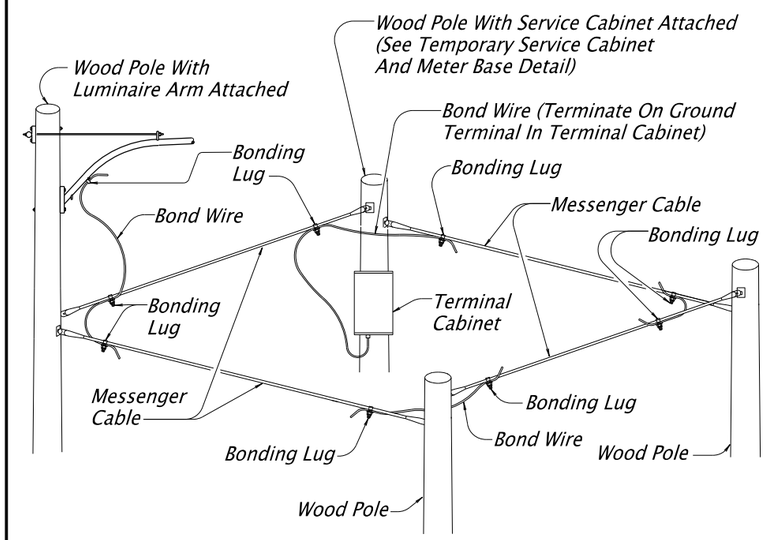

TEMPORARY GROUNDING/BONDING

CALC. BOOK NO. N/A

SDR REPORT DATE 2-Jul-2020

NOTE: All material and workmanship shall be in accordance with the current Oregon Standard Specifications

The selection and use of this Standard Drawing, while designed in accordance with generally accepted engineering principles and practices, is the sole responsibility of the user and should not be used without consulting a Registered Professional Engineer.

OREGON STANDARD DRAWINGS

TEMPORARY CONTROLLER CABINET, SERVICE CABINET, METER BASE, & TERMINAL CABINET

2021

DATE	REVISION DESCRIPTION

TM454

Effective Date: December 1, 2020 - May 31, 2021

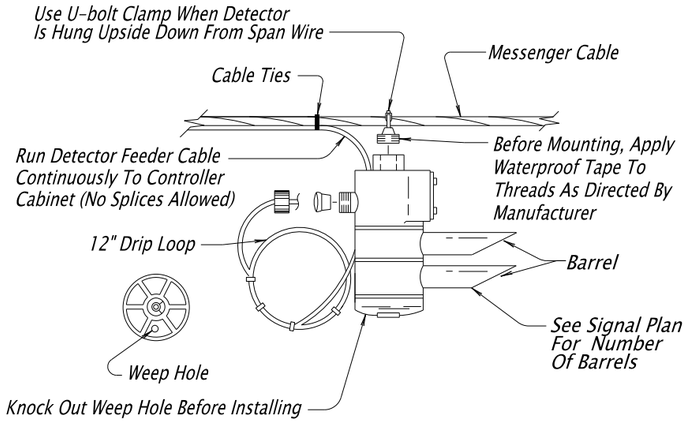

FIRE PREEMPTION INSTALLATION

(Emitter Units For Vehicles Provided By Others)

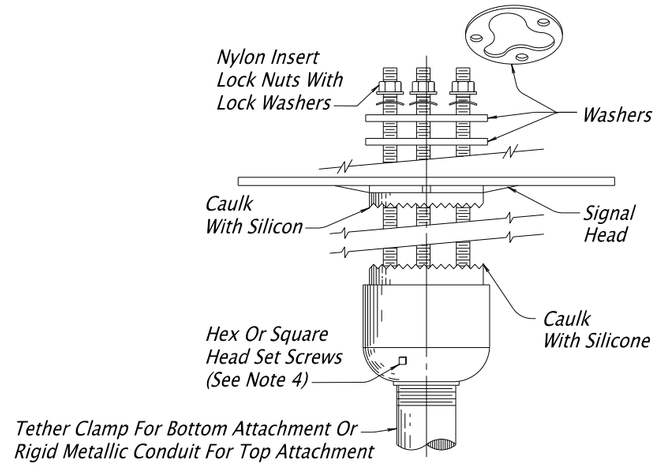

TRI-STUD ADAPTOR DETAIL

(Bottom Attachment Shown, Rotate180 Degrees For Top Attachment)

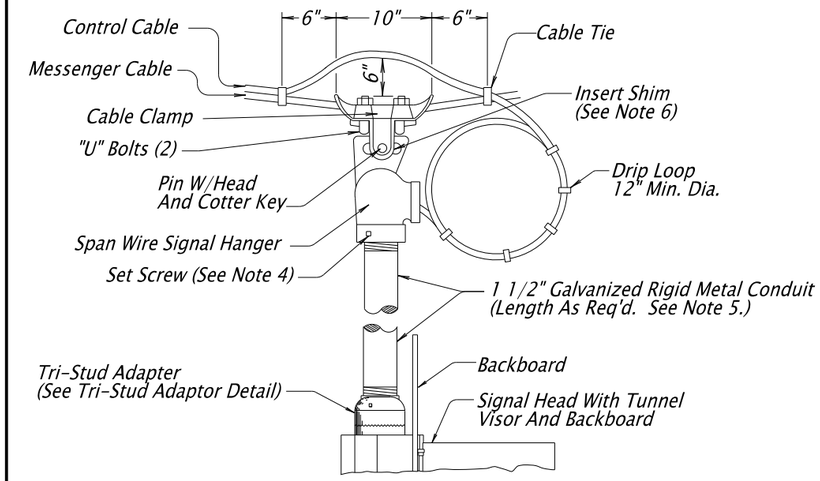

MESSENGER CABLE ATTACHMENT FOR SIGNAL OR SIGNS

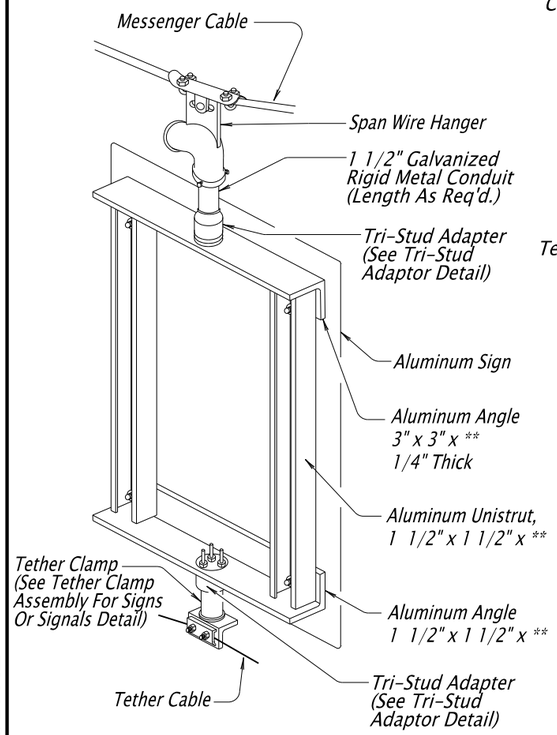

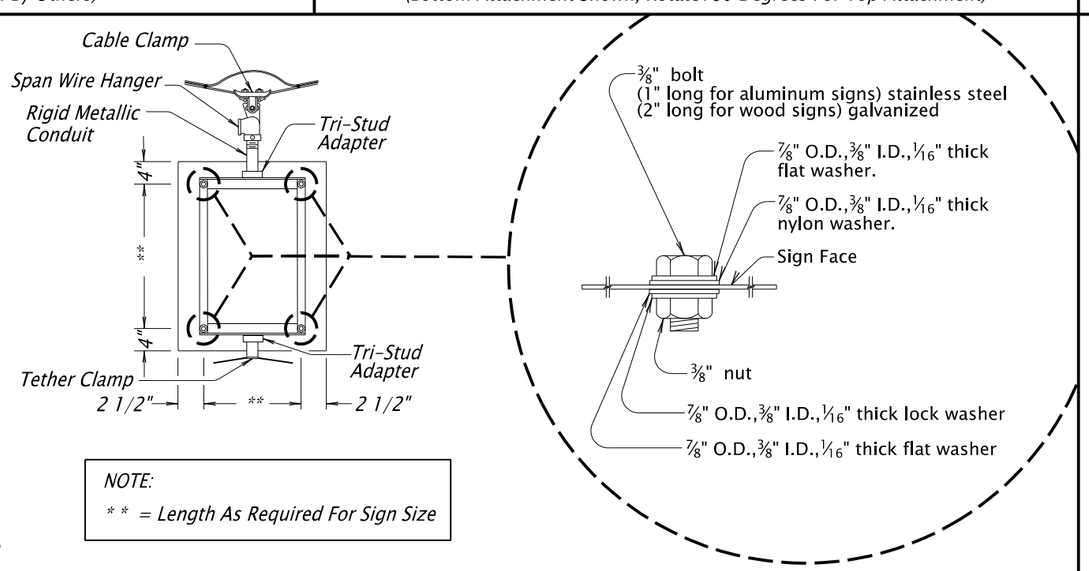

NOTE:

** = Length As Required For Sign Size

SIGN BRACKET (TYPE "A", SPANWIRE INSTALLATION)

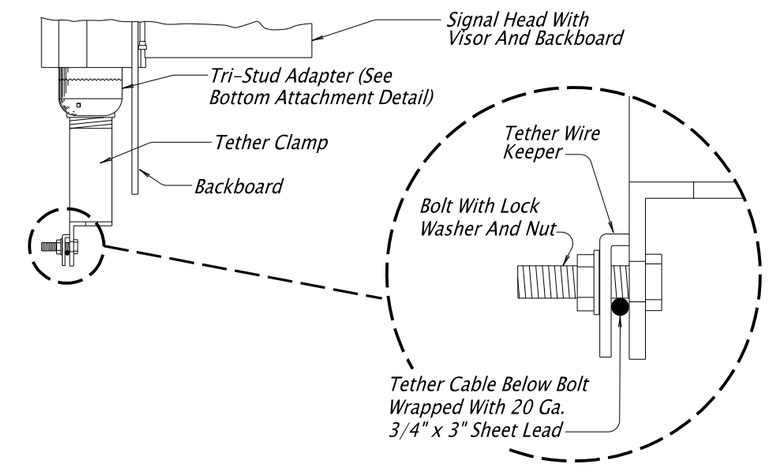

TETHER CLAMP ASSEMBLY FOR SIGNALS OR SIGNS

GENERAL NOTES:

1. *Galvanize All Steel Parts After Fabrication.*
2. *All Screws, Bolts, "U" Bolts, Pins, Nuts And Washers Shall Be Type 304 Or 316 Stainless Steel Unless Noted Otherwise.*
3. *Bolts And Screws Shall Have Square Or Hex Heads. Allen Head Fasteners Not Allowed.*
4. *All Set Screws Shall Be Drilled And Tapped Through The First Wall Of Conduit/Tether Clamp. Set Screw Shall Not Extend More Than 5/8 " Inside Conduit And Be Installed With Anti-Seize Compound.*
5. *Threaded End Of Conduit Shall Extend A Minimum Of 5/8" Into Span Wire Signal Hanger.*
6. *Install Shim Between Cable Clamp And Span Wire Hanger To Eliminate Excess Movement Yet Allow For Moderate Sway.*

The selection and use of this Standard Drawing, while designed in accordance with generally accepted engineering principles and practices, is the sole responsibility of the user and should not be used without consulting a Registered Professional Engineer.

CALC. BOOK NO. N/A

SDR REPORT DATE 2-Jul-2020

NOTE: All material and workmanship shall be in accordance with the current Oregon Standard Specifications

OREGON STANDARD DRAWINGS

TEMPORARY SPANWIRE MOUNTING DETAILS FOR VEHICLE SIGNALS, SIGNS, & FIRE PREEMPTION

2021

DATE	REVISION DESCRIPTION

TM456

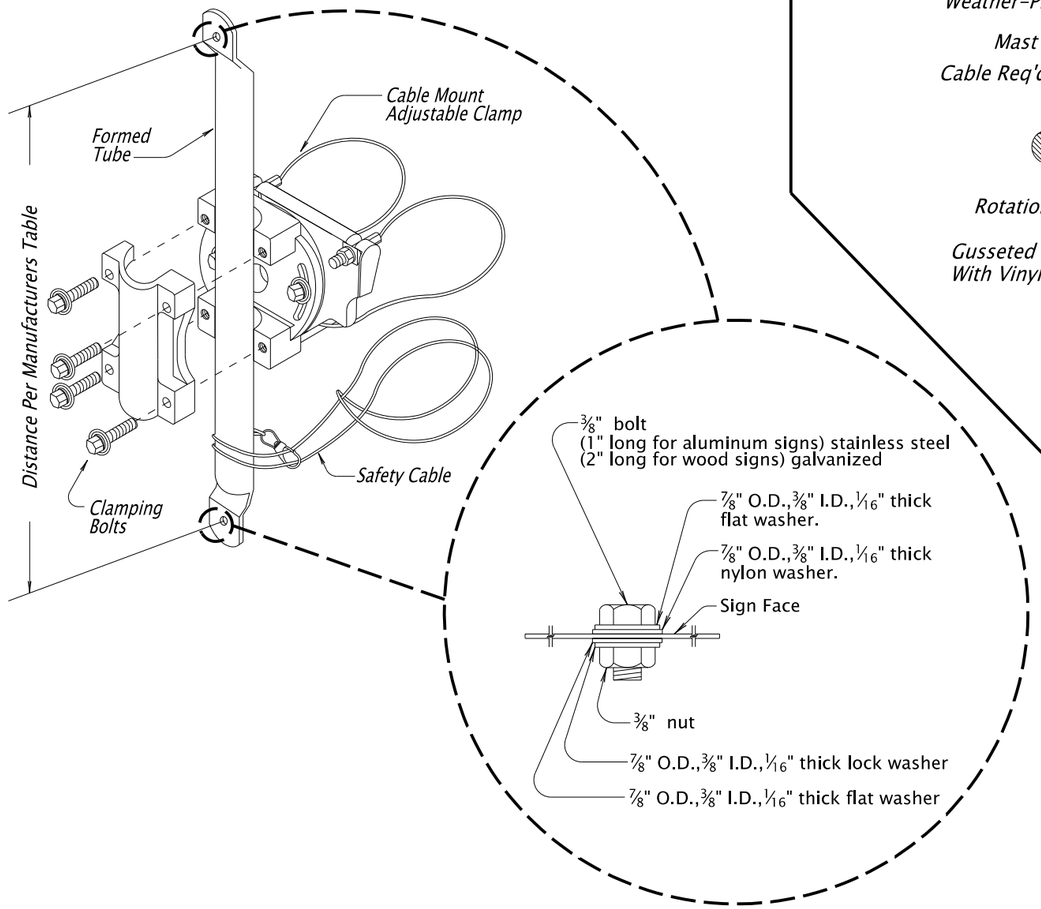

SIGN BRACKET (TYPE "B",MAST ARM/POLE INSTALLATION)

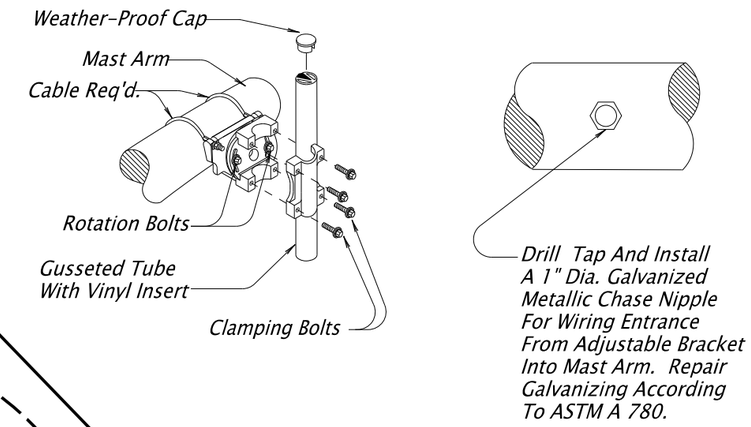

VEHICLE SIGNAL MAST ARM INSTALLATION

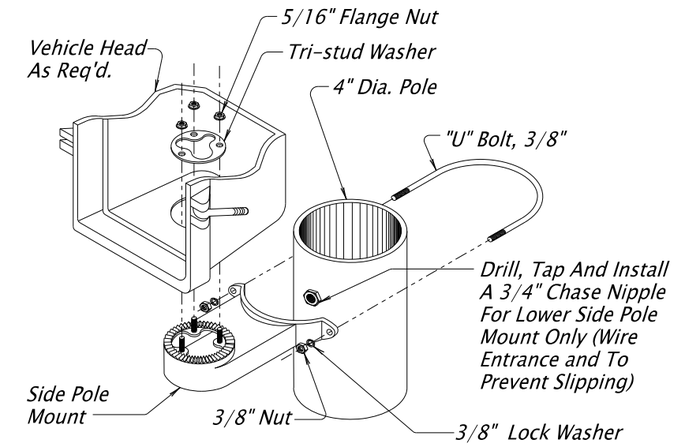

4" SIDE POLE MOUNT INSTALLATION

(For Mounting Signal Heads to Vehicle Pedestals)

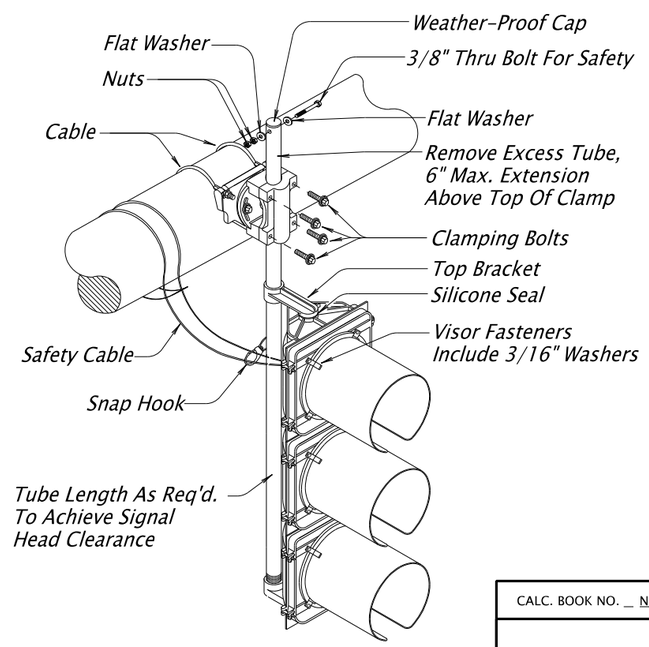

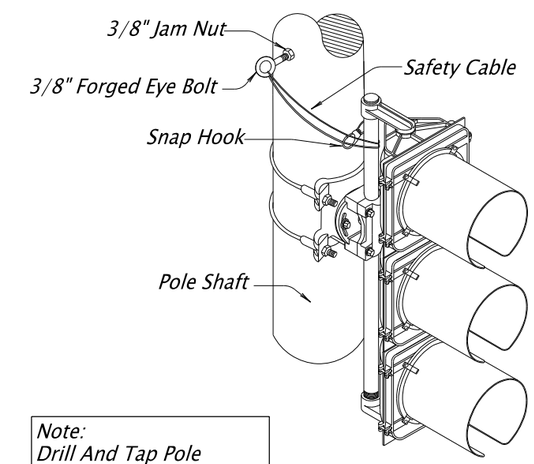

Note:
Drill And Tap Pole
For 3/8" Forged Eye Bolt.

POLE SHAFT INSTALLATION

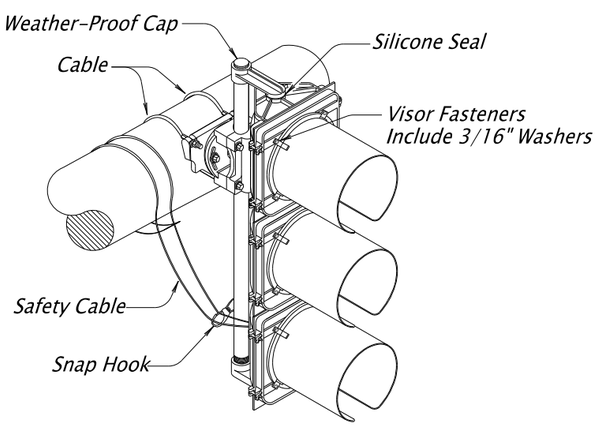

MOUNTING VEHICLE SIGNAL BETWEEN BRACKET ARMS

NOTE:

This Detail Can Be Applied To Any Signal Head Configuration. If The Extension Between The Center Line Of The Mast Arm And The Top Bracket Exceeds 18" Consult Engineer For Guidance.

MOUNTING VEHICLE SIGNAL ABOVE BRACKET ARMS

General Notes:

1. All Screws, Bolts, Nuts And Washers Shall BeType 304 Or 316 Stainless Steel Unless Noted Otherwise.
2. Bolts And Screws Shall Have Square Or Hex Heads. Allen Head Fasteners Not Allowed.
3. Follow Manufacturers Recommendations For Installation.

The selection and use of this Standard Drawing, while designed in accordance with generally accepted engineering principles and practices, is the sole responsibility of the user and should not be used without consulting a Registered Professional Engineer.

CALC. BOOK NO. N/A

SDR REPORT DATE 2-Jul-2020

NOTE: All material and workmanship shall be in accordance with the current Oregon Standard Specifications

OREGON STANDARD DRAWINGS

VEHICLE SIGNAL BRACKET & SIGN BRACKET (TYPE B) DETAILS

2021

DATE	REVISION DESCRIPTION

TM462

Effective Date: December 1, 2020 - May 31, 2021

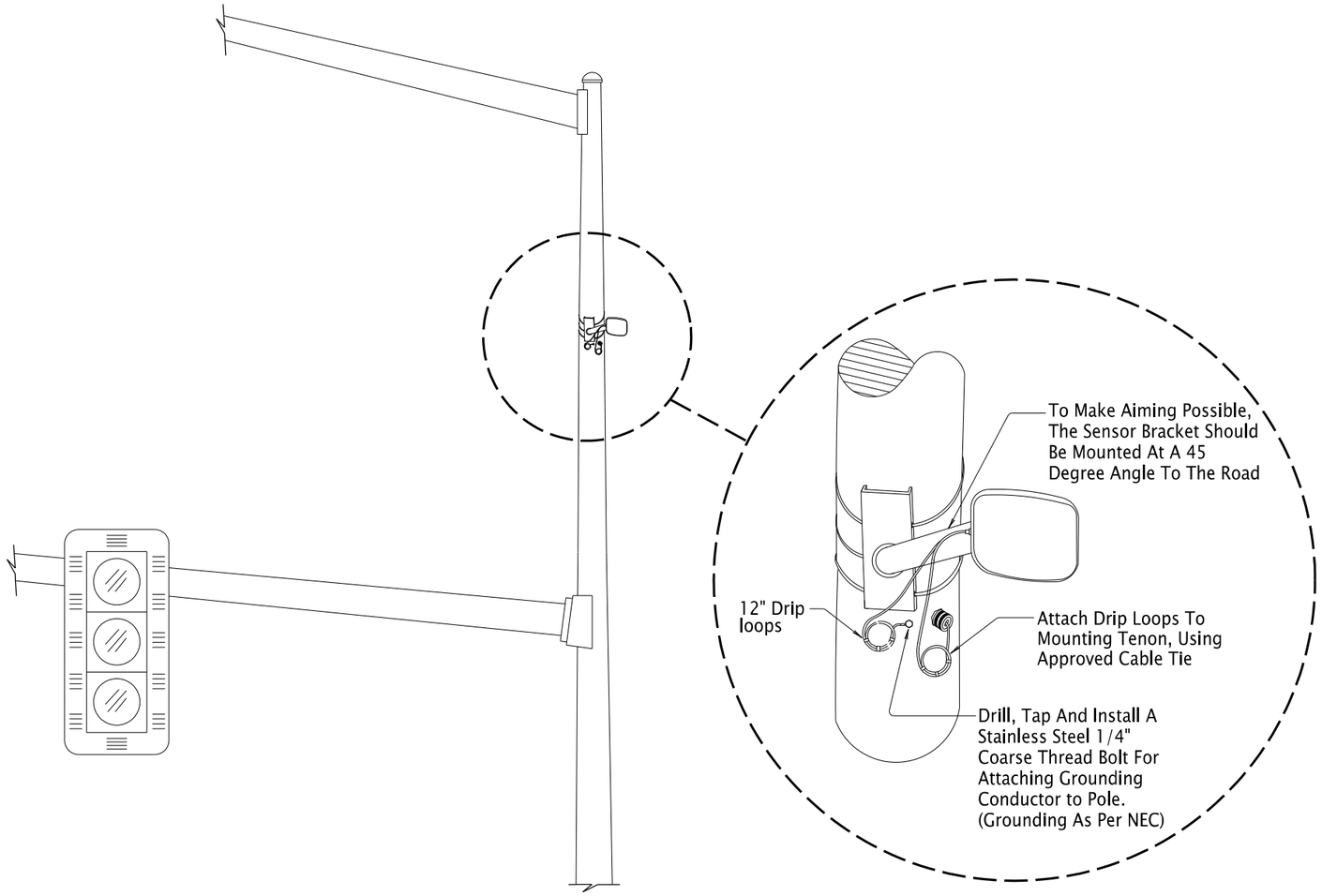

VERTICAL SIGNAL POLE MOUNT

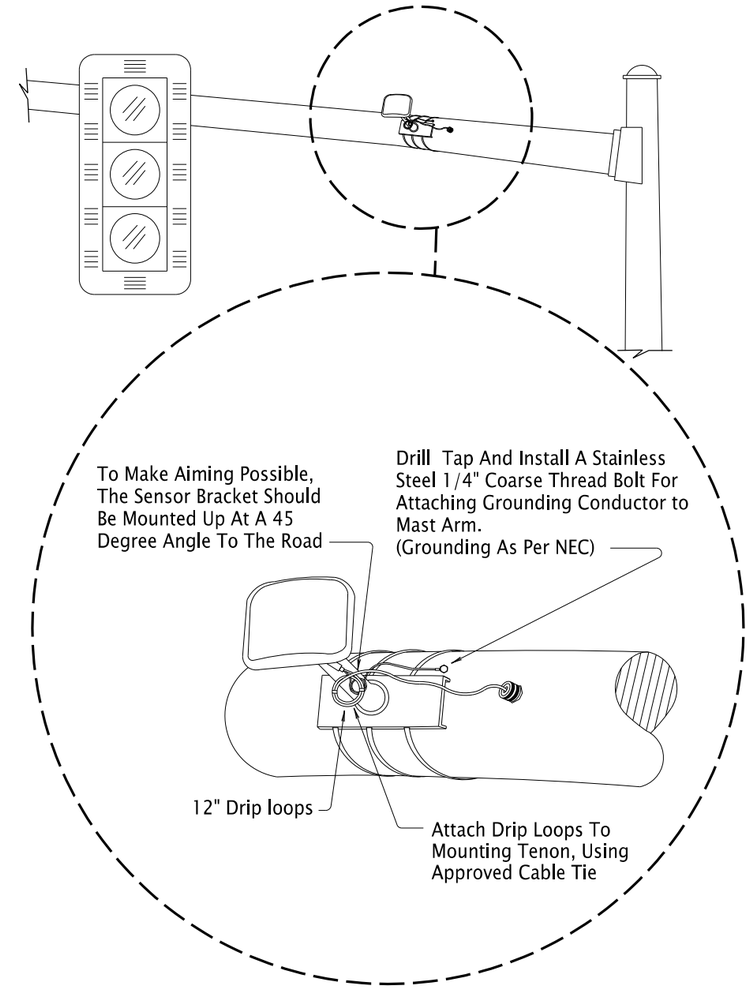

HORIZONTAL MAST ARM MOUNT

GENERAL NOTES:

1. All Bolts, Nuts And Washers Shall Be 304, Or 316 Stainless Steel Unless Noted Otherwise.
2. Mount Radar Detector Assembly As Per Manufacturers Recommendations.

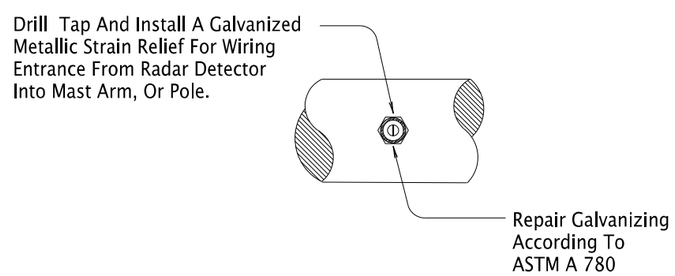

CABLE GRIP

CALC. BOOK NO. N/A

SDR REPORT DATE 2-Jul-2020

NOTE: All material and workmanship shall be in accordance with the current Oregon Standard Specifications

The selection and use of this Standard Drawing, while designed in accordance with generally accepted engineering principles and practices, is the sole responsibility of the user and should not be used without consulting a Registered Professional Engineer.

OREGON STANDARD DRAWINGS

RADAR MOUNTING DETAILS

2021

DATE	REVISION DESCRIPTION

TM466

Effective Date: December 1, 2020 - May 31, 2021

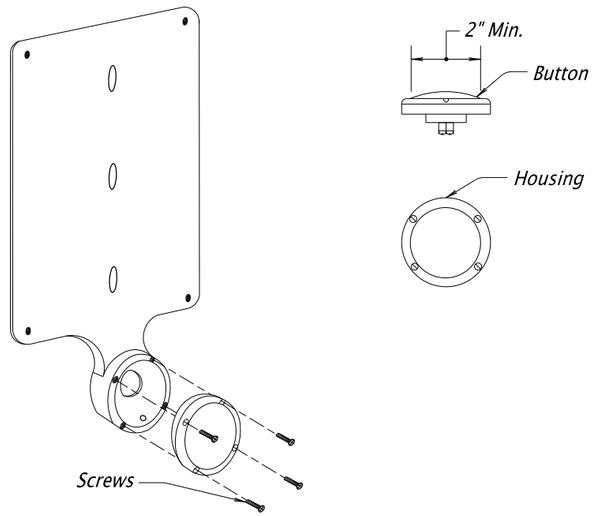

STANDARD PUSHBUTTON

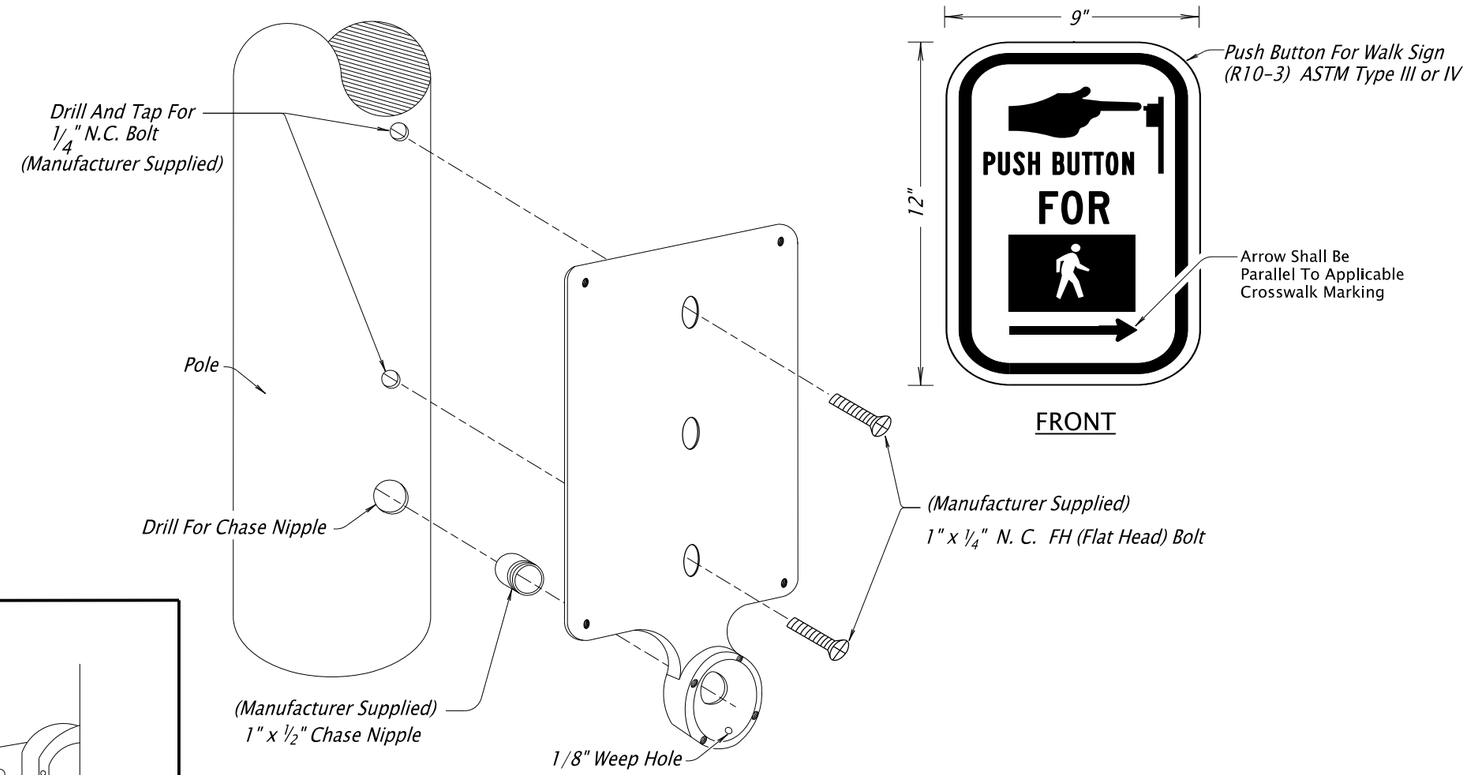

STANDARD PUSHBUTTON STATION AND INSTRUCTION SIGN

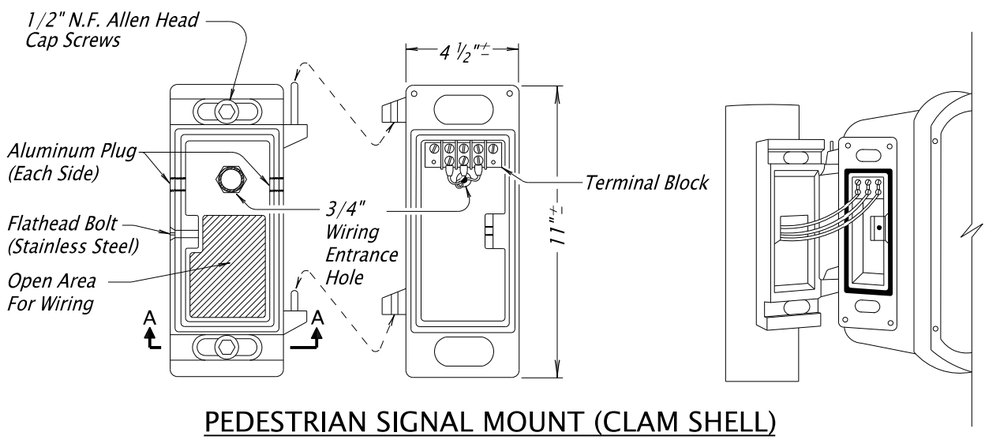

PEDESTRIAN SIGNAL MOUNT (CLAM SHELL)

General Notes:

1. All Screws, Bolts, Nuts And Washers Shall Be Type 304 Or 316 Stainless Steel Unless Noted Otherwise.
2. Bolts And Screws Shall Have Square Or Hex Heads. Allen Head Fasteners Not Allowed.
3. Drill And Tap Pole As Per Orientation Shown On Plans.
4. Horizontal Reach To The Pushbutton Shall Be 10 Inches Maximum. See Plans Or Consult Engineer To Ensure Compliance.

NOTES:

1. Where Two Heads Are Side Mounted On 4" Conduit, Proper Clearance Shall Be Maintained To Allow Legend To Be Fully Visible.
2. Clam Shells To Be Orientated So That The Heads Can Be Opened For Maintenance. (Verify Hinge Placement Of Clamshell).

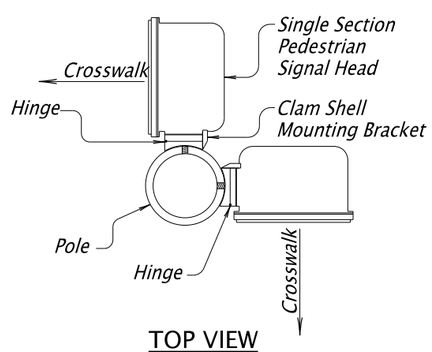

TOP VIEW

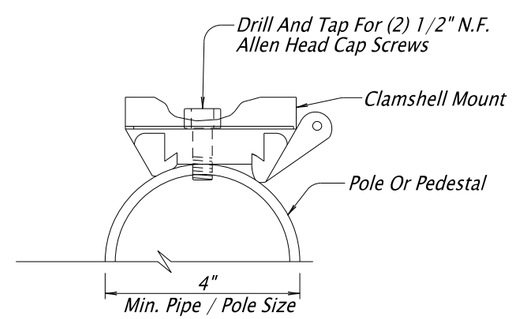

SECTION A-A

CLAM SHELL ORIENTATION

The selection and use of this Standard Drawing, while designed in accordance with generally accepted engineering principles and practices, is the sole responsibility of the user and should not be used without consulting a Registered Professional Engineer.

CALC. BOOK NO. N/A

SDR REPORT DATE 2-Jul-2020

NOTE: All material and workmanship shall be in accordance with the current Oregon Standard Specifications

OREGON STANDARD DRAWINGS

PEDESTRIAN SIGNAL MOUNT AND PEDESTRIAN PUSHBUTTON DETAILS

2021

DATE	REVISION DESCRIPTION

TM467

Effective Date: December 1, 2020 - May 31, 2021

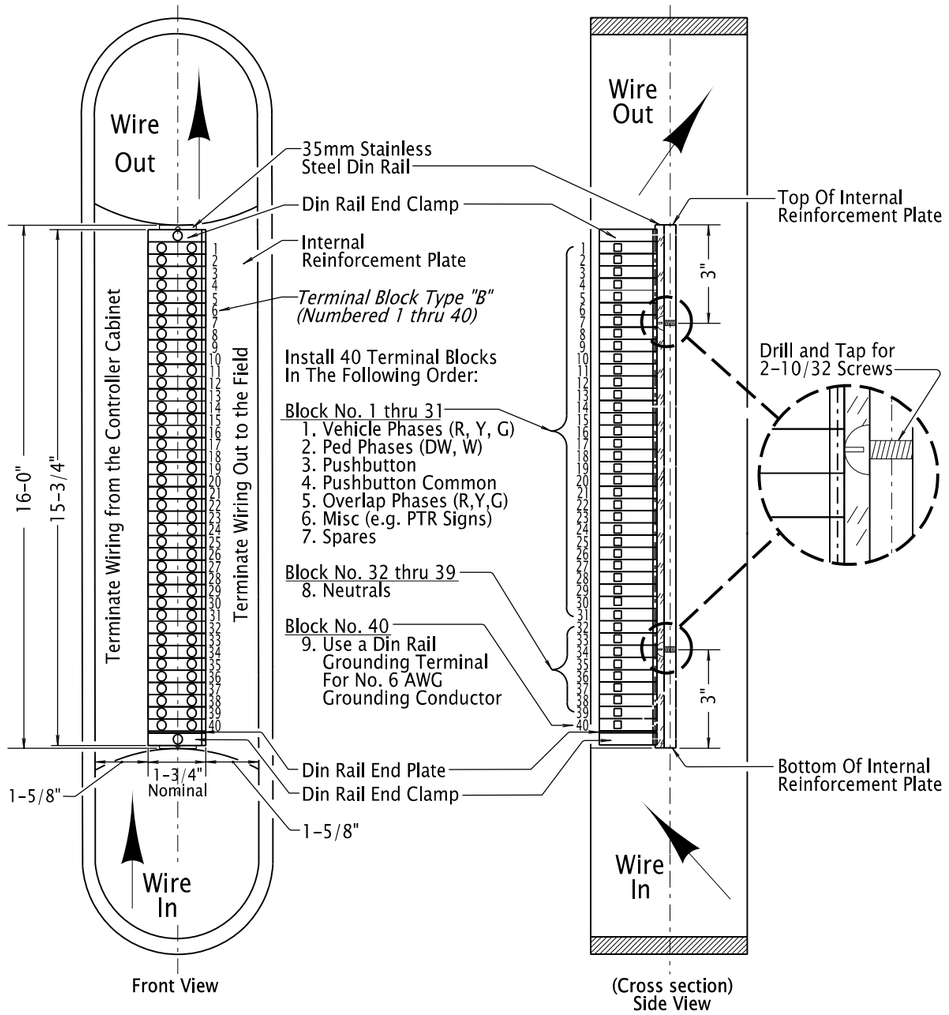

DIN RAIL, TERMINAL BLOCKS, & WIRING IN POLE RECESSED TERMINAL CABINET

7 CONDUCTOR CONTROL CABLE			PEDESTRIAN PHASES	VEHICLE PHASES	SIGNAL HEAD TYPES			
CONDUCTOR NUMBER	BASE COLOR	FIRST TRACER	1 Pedestrian Phase	1 Vehicle Phase	6L, 3LBF	5 or 7	1R, 1Y, 2, 3L, 3LCF, 3R, 4 or 9	10
1	WHITE	—	NEUTRAL	NEUTRAL	NEUTRAL	NEUTRAL	NEUTRAL	NEUTRAL
2	BLACK	—	WALK	YELLOW	YELLOW	YELLOW	YELLOW	YELLOW
3	RED	—	DONT WALK	RED	RED	RED	RED	RED 1
4	ORANGE	—	P.B. COMMON	SPARE	FLASHING YELLOW	TURN YELLOW	SPARE	RED 2
5	GREEN	—	PUSHBUTTON	GREEN	GREEN	GREEN	GREEN	SPARE
6	BLUE	—	SPARE	SPARE	SPARE	TURN GREEN	SPARE	SPARE
7	WHITE	BLACK	SPARE	SPARE	SPARE	SPARE	SPARE	SPARE

COLOR CODE CHART CONTROL CABLE

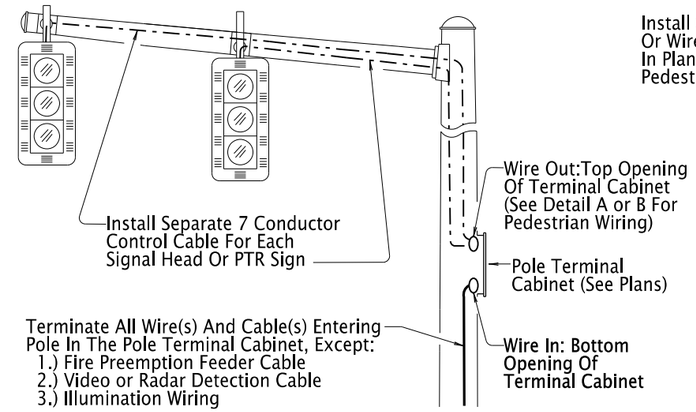

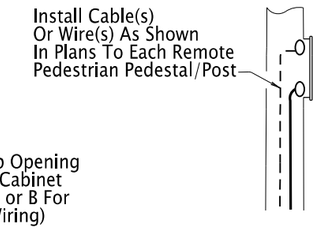

Detail A

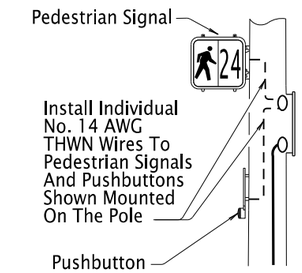

Detail B

WIRE & CABLE IN POLES

General Notes:

1. Install All Wire And Cable Between Terminal Blocks Without Splicing.
2. Mark Phase Number/Identification On All Cable In Junction Boxes, Terminal Cabinets, Service Cabinets, And Controller Cabinets With Permanent Tags. Use Handheld Labeler (Brady IDXPERT With XC-1500-580-WT-BK Tags Or Approved Equal). Wiring For Overlaps Shall Be Labeled (OLA,OLB,OLC,OLD).
3. Install No. 16 AWG TFFN Orange Base With Blue Tracertone Wire In All Conduits As A Locate Wire. Leave Slack As Required In General Note 5 And Install A Wire Nut. Do Not Join Multiple Locate Wires Under A Common Wire Nut Unless Otherwise Shown.
4. Tape The Ends Of Unsued Conductors With Insulated Vinyl Plastic Tape.
5. Leave Slack In Each Wire And Cable As Follows:
   A.) 2 Feet In Junction Boxes And Poles
   B.) 6 Feet In The First Junction Box Nearest The Controller Cabinet
   C.) 6 Feet In Controller Cabinet And Service Cabinet
6. Install Polyethylene Pull Line In All Conduits Noted On The Plans For Future Use (No Wires/Cables In Conduit). Leave 6 Feet Of Slack Pull Line.
7. At Existing Installations The Contractor Is Responsible For the Re-wiring And Re-numbering Of New And Existing Control Cables, In All Junction Boxes, Terminal Cabinets, Service Cabinets, And Controller Cabinets.

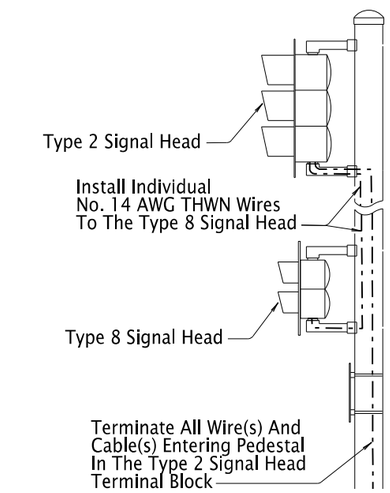

WIRE & CABLE IN RAMP METER PEDESTALS

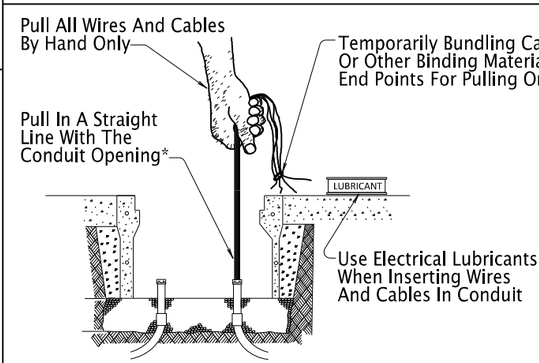

* Use A Pulley Device To Achieve A Straight Line If Pulls Are Made With Poles Or Controller Cabinets In Place

WIRE & CABLE IN CONDUITS

CALC. BOOK NO. N/A

SDR REPORT DATE 2-Jul-2020

NOTE: All material and workmanship shall be in accordance with the current Oregon Standard Specifications

The selection and use of this Standard Drawing, while designed in accordance with generally accepted engineering principles and practices, is the sole responsibility of the user and should not be used without consulting a Registered Professional Engineer.

OREGON STANDARD DRAWINGS

WIRE & CABLE INSTALLATION

2021

DATE	REVISION DESCRIPTION

TM470

Effective Date: December 1, 2020 - May 31, 2021

Type Of Conduit	Minimum Cover From Top of Finished Surface (Use Permit Depth If Greater Than These)	
	Roadway & Shoulders	Other Areas
Metallic	24"	18"
Non-Metallic	30"	18"

MINIMUM COVER FROM FINISHED SURFACE

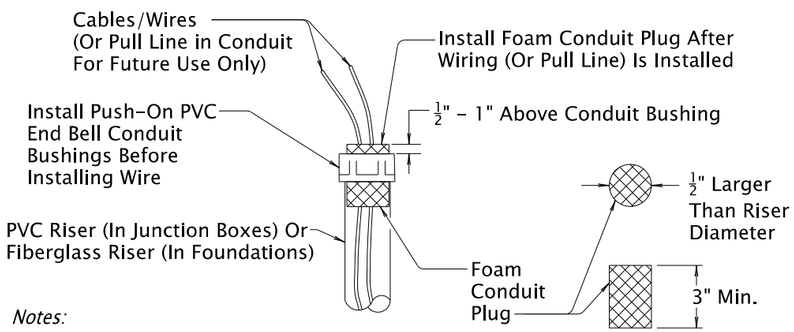

Notes:

1.) Ream Conduit Ends To Remove Rough Edges And Burrs
2.) Temporarily Plug Or Cap Conduit Ends Until Wiring Is Installed To Keep Debris Out

CONDUIT ENDS AND BUSHINGS

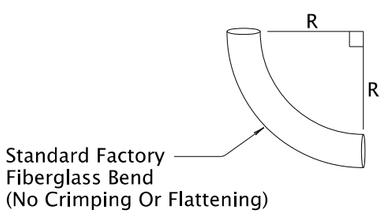

Conduit Diameter	R (min.)
1.5"	10"
2.0"	12"
2.5"	15"
3.0"	18"

CONDUIT ELBOWS

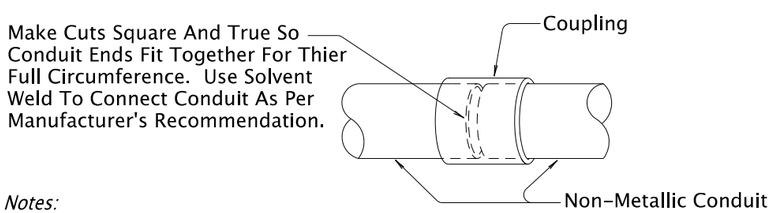

Notes:

1.) Slip Joints, Running Threads Or Reducing Couplings Not Allowed. Use The Same Size Conduit For The Entire Length, Outlet To Outlet.

CONDUIT COUPLINGS

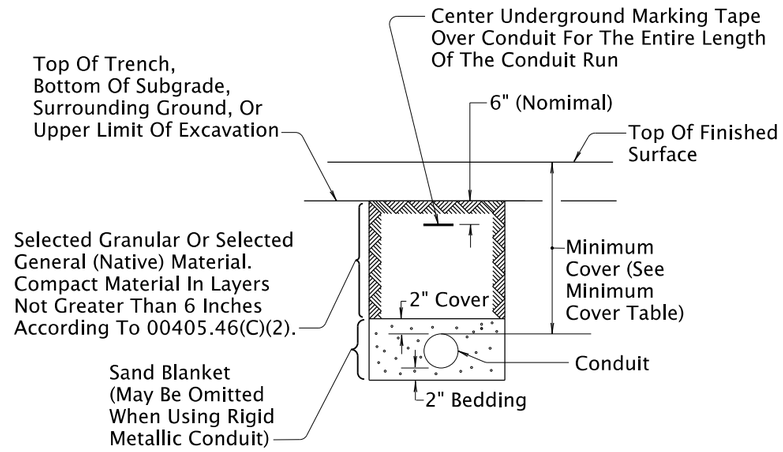

UNSURFACED AREAS
(new roadway prior to paving, shoulders, under sidewalk, landscaped areas, etc.)

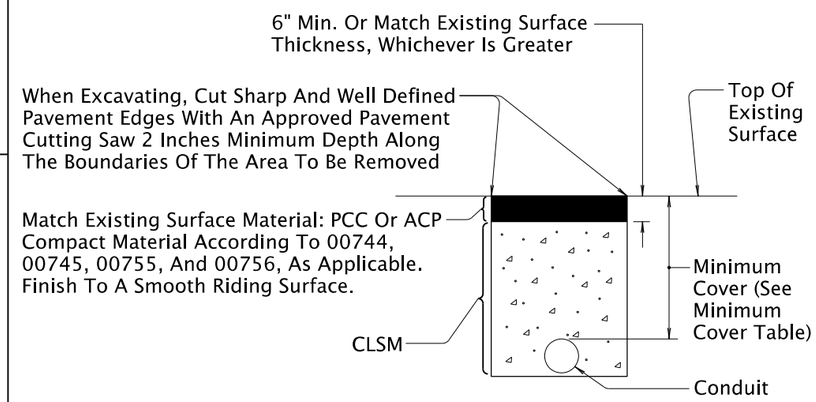

EXISTING PAVED AREAS

Trenching & Backfill Notes:

1. Excavate According To 00960.40. In Areas To Be Paved Or Landscaped, Place All Conduit Before Paving Or Landscaping.

2. Hold Trench Width To A Practical Minimum

3. Do Not Backfill Trenches Until Inspected By The Engineer

4. Furnish Backfill Materials According To 00960.10

CONDUIT OPEN TRENCH EXCAVATION & BACKFILL

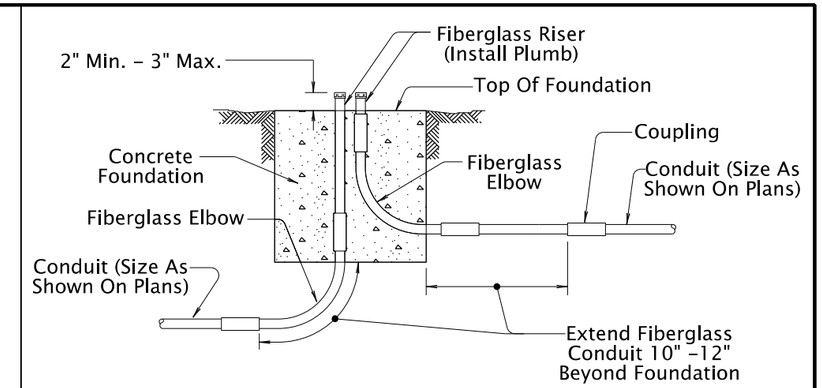

CONDUIT INSTALLATIONS IN FOUNDATIONS

(Applicable for Pole, Pedestal, Post, Service Cabinet and Controller Cabinet Foundations)

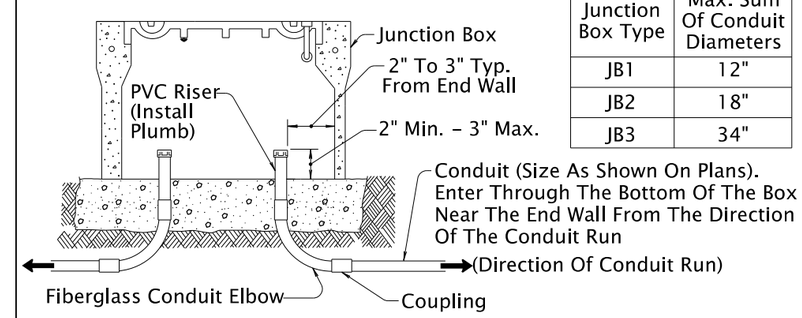

Junction Box Type	Max. Sum Of Conduit Diameters
JB1	12"
JB2	18"
JB3	34"

CONDUIT INSTALLATION IN JUNCTION BOXES

General Notes:

1. Install Non-Metallic Conduit Unless Otherwise Shown. Conduit Runs Shall Be Continous Between Any Pole, Junction Box, Or Cabinet.

2. Install Conduit By Open Trench Method, Horizontal Directional Drilling, Or As Shown

3. Conduit Runs Shown On Plans Are For Bidding Purposes Only. Locations May Be Changed To Avoid Obstructions.

4. Larger Conduit Than Specified May Be Used At The Option And Cost Of The Contractor If Max. Sum Of Conduit Diameters In Junction Box Is Not Exceeded.

CALC. BOOK NO. N/A

SDR REPORT DATE 2-Jul-2020

NOTE: All material and workmanship shall be in accordance with the current Oregon Standard Specifications

The selection and use of this Standard Drawing, while designed in accordance with generally accepted engineering principles and practices, is the sole responsibility of the user and should not be used without consulting a Registered Professional Engineer.

OREGON STANDARD DRAWINGS

TRENCHING & CONDUIT INSTALLATION

2021

DATE	REVISION DESCRIPTION

TM471

Effective Date: December 1, 2020 - May 31, 2021

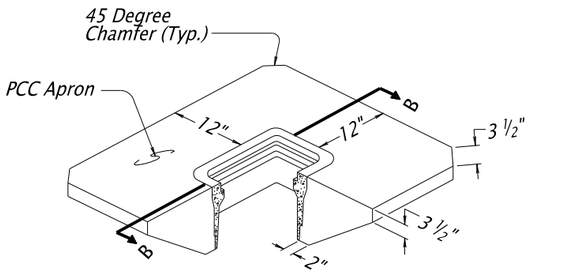

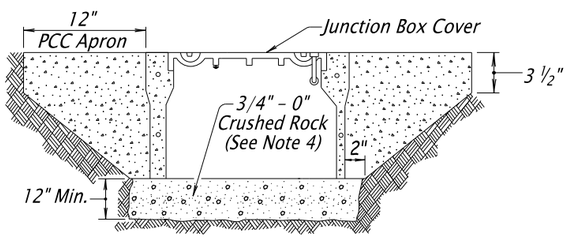

SECTION B-B

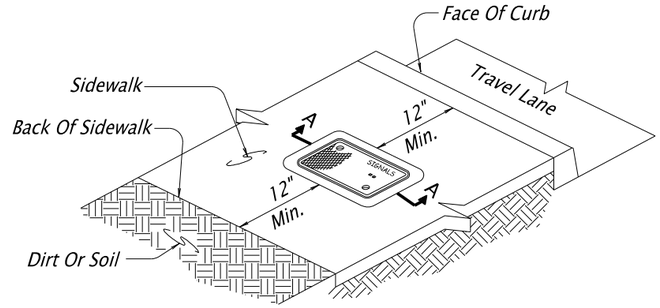

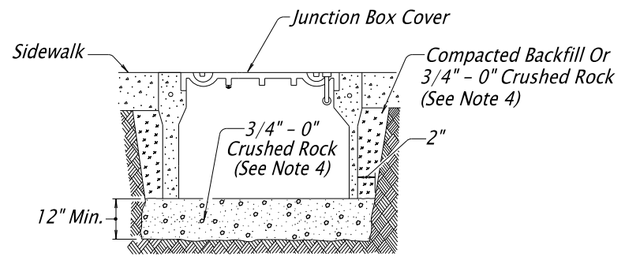

SECTION A-A

JUNCTION BOX INSTALLATION IN PCC SIDEWALK

(This Detail Only Applicable for Junction Boxes Located In Flat Areas Of Sidewalks. Do Not Install In Slopes Of Ramps Or Driveways)

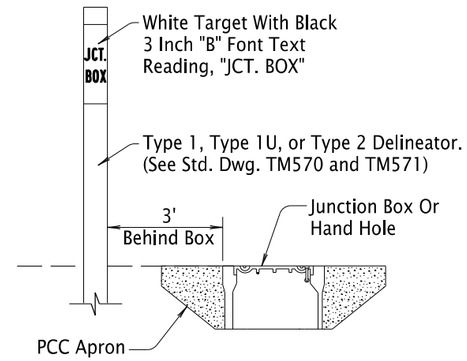

DELINEATION OF JUNCTION BOX & HAND HOLE IN UNSURFACED AREA

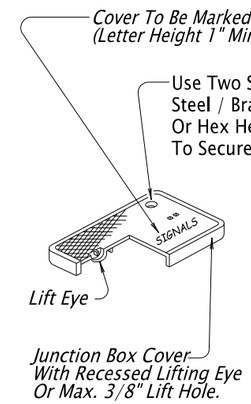

JUNCTION BOX COVER DETAILS

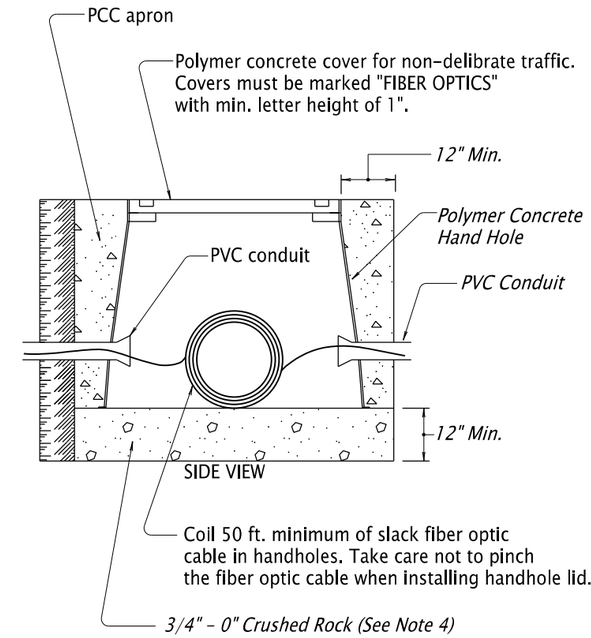

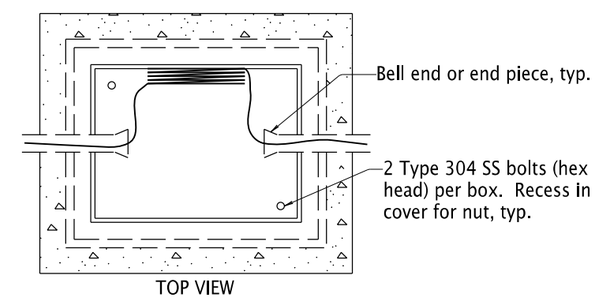

FIBER OPTIC CABLE HAND HOLE INSTALLATION

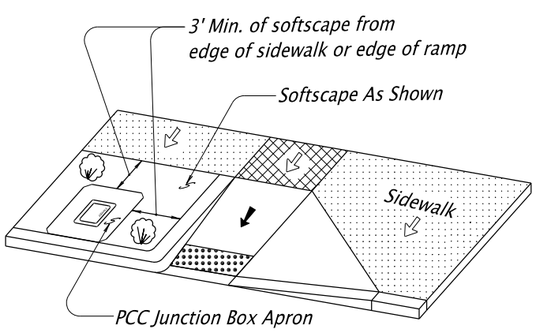

JUNCTION BOX INSTALLATION IN UNSURFACED AREA

(This Detail Only Applicable for Junction Boxes Located In Incidental Travel Areas; Gravel Shoulders, Behind Guardrail, Etc. Do Not Install In Travel Lanes, Paved Shoulders, Or Other Areas Exposed To Traffic.)

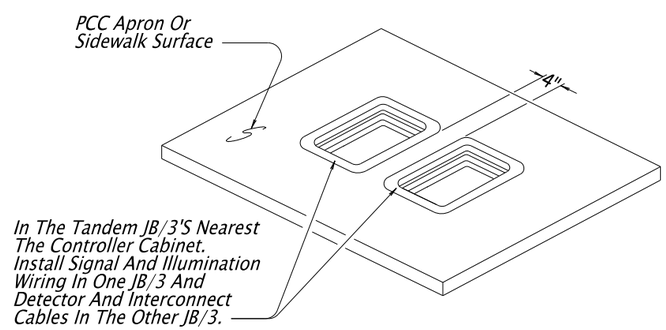

TANDEM JB/3A JUNCTION BOX DETAILS

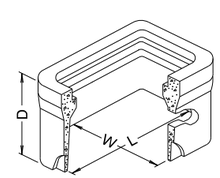

Type*	L	W	D
JB1	17"	10"	12"
JB2	22"	12"	12"
JB3	30"	17"	12"
HH-1	24"	30"	24"
HH-2	30"	48"	24"
HH-3	30"	48"	36"

**Junction Box Or Handhole Type As Shown On Plans*

DIMENSION TABLE

GENERAL NOTES:

1. Install Top of Junction Box And Hand Hole Flush With The Sidewalk, Surrounding Grade, Or Top Of Curb. For Hand Holes Installed In The Roadway Or Shoulder, Leave The Top Of The Hand Hole 1/2" Below The Pavement Surface.
2. Install Junction Boxes And Hand Holes At The Approximate Locations Shown, Or If Not Shown, No More Than 300 Feet Apart For Junction Boxes And No More Than 1000 Feet Apart For Hand Holes.
3. More Junction Boxes And Hand Holes Than Specified May Be Installed To Facilitate The Work At The Option And Cost Of The Contractor
4. Use Materials According To 00640.10 and 00640.16. Use Compaction Equipment Suitable For Area And Compact Each Six Inch Layer With Sufficient Coverages To Produce A Firm Unyielding Surface. Do Not Install Conductors Until Surface Has Been Constructed.

CALC. BOOK NO. N/A

SDR REPORT DATE 2-Jul-2020

NOTE: All material and workmanship shall be in accordance with the current Oregon Standard Specifications

The selection and use of this Standard Drawing, while designed in accordance with generally accepted engineering principles and practices, is the sole responsibility of the user and should not be used without consulting a Registered Professional Engineer.

OREGON STANDARD DRAWINGS

TRAFFIC SIGNAL JUNCTION BOXES/ HAND HOLES

2021

DATE	REVISION DESCRIPTION

TM472

Effective Date: December 1, 2020 - May 31, 2021

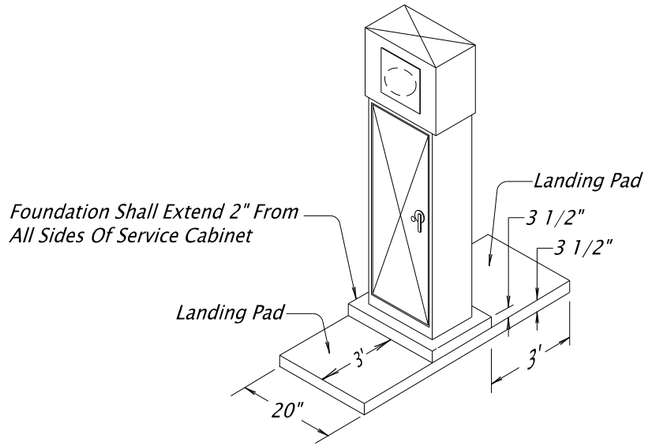

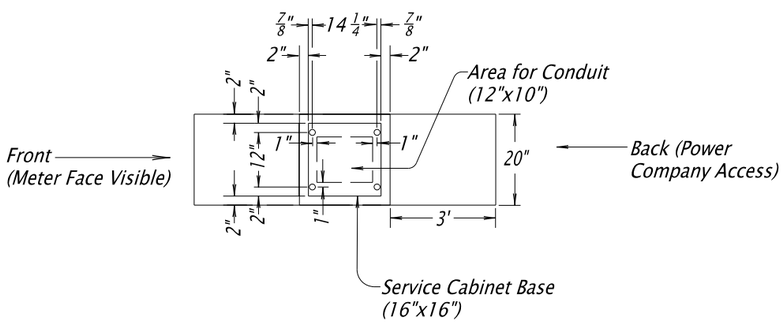

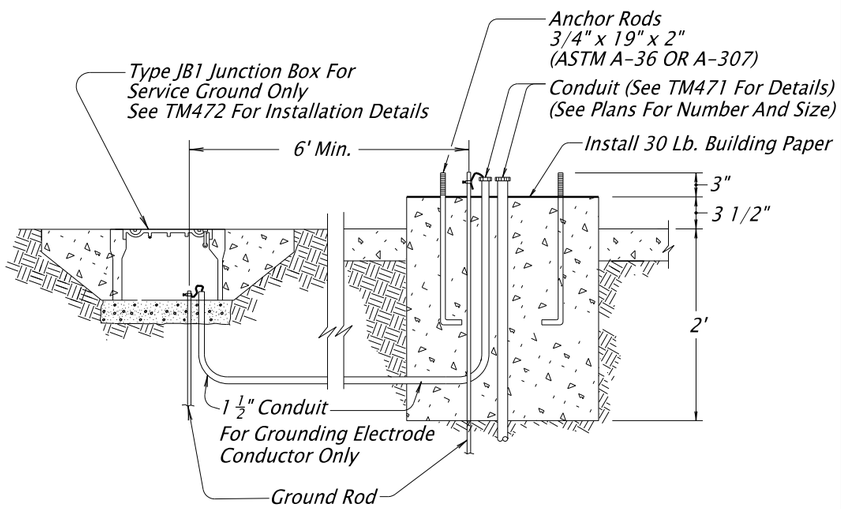

BASE MOUNTED SERVICE CABINET FOUNDATION

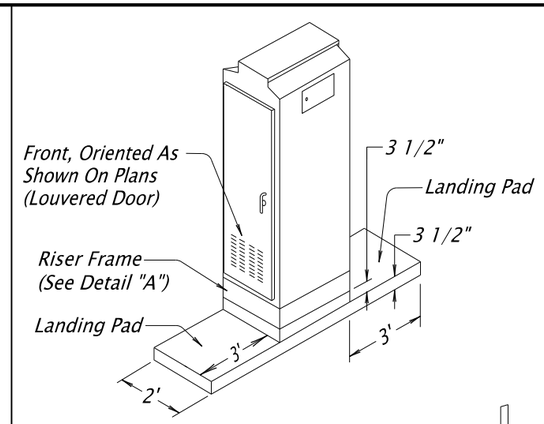

General Notes:

1. All Screws, Bolts, Nuts And Washers Shall Be Galvanized Steel Unless Noted Otherwise.
2. Bolts And Screws Shall Have Square Or Hex Heads. Allen Fasteners Not Allowed.
3. Type 304 Or 316 Stainless Steel Or Galvanized Steel May Be Used For Mounting Cabinet To Riser Frame.

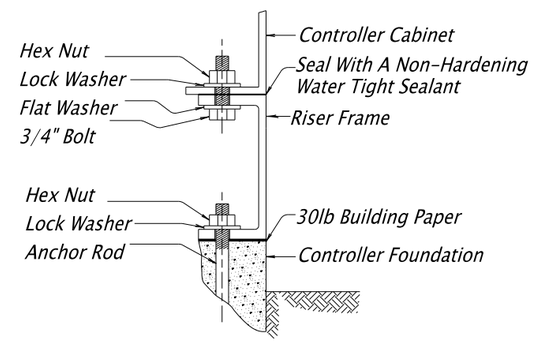

DETAIL "A"
RISER FRAME CONNECTION

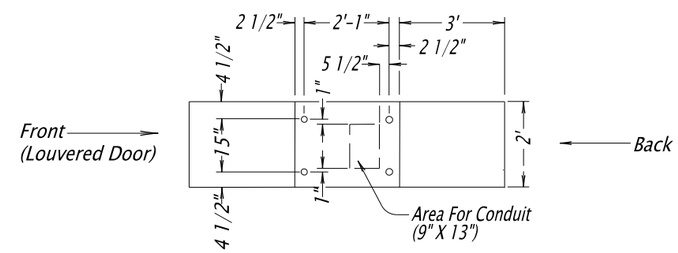

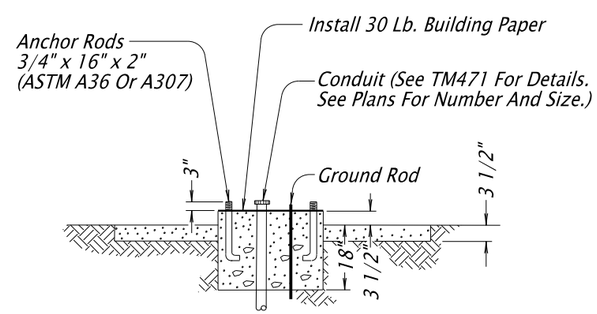

CONTROLLER CABINET FOUNDATION DETAILS

(Model 332S, 332, 334, And 340 Cabinets)

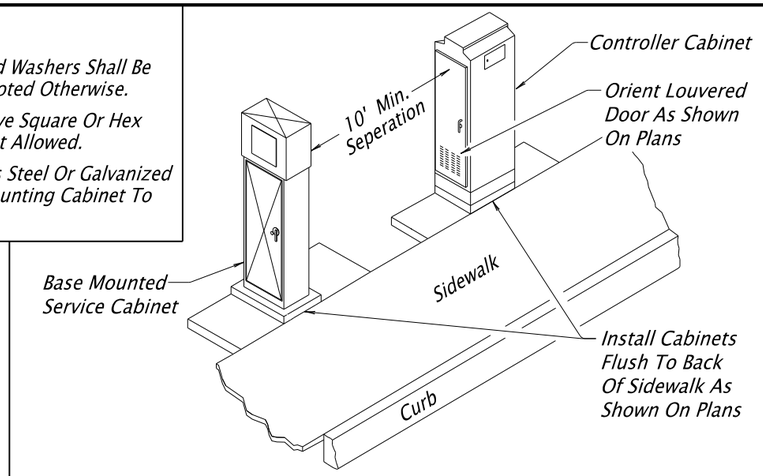

WITH SIDEWALK

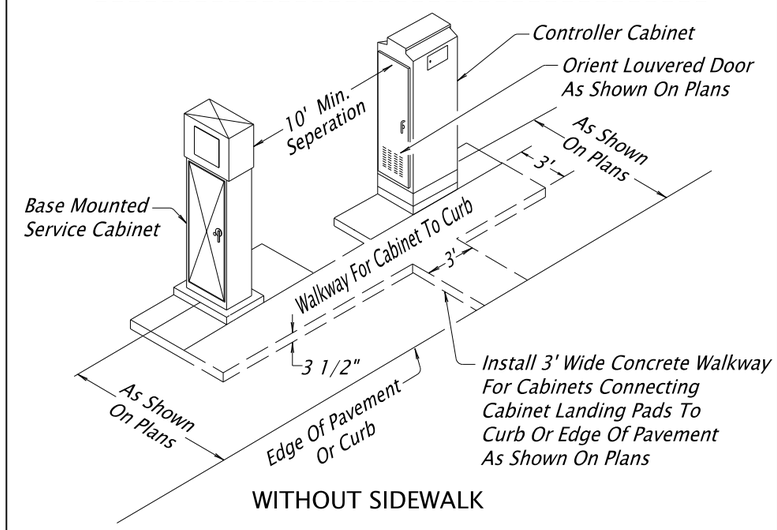

WITHOUT SIDEWALK

CABINET FOUNDATION LOCATIONS

Note: Verify Base Mounted Service Cabinet Location And Meter Placement Is Acceptable To Local Power Company

CALC. BOOK NO. N/A

SDR REPORT DATE 2-Jul-2020

NOTE: All material and workmanship shall be in accordance with the current Oregon Standard Specifications

The selection and use of this Standard Drawing, while designed in accordance with generally accepted engineering principles and practices, is the sole responsibility of the user and should not be used without consulting a Registered Professional Engineer.

OREGON STANDARD DRAWINGS

CONTROLLER CABINET & SERVICE CABINET FOUNDATION DETAILS

2021

DATE	REVISION DESCRIPTION

TM482

Effective Date: December 1, 2020 - May 31, 2021

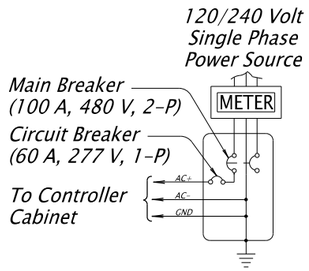

SERVICE CABINET WIRING FOR 120/240 VOLT SIGNAL SERVICE BMC

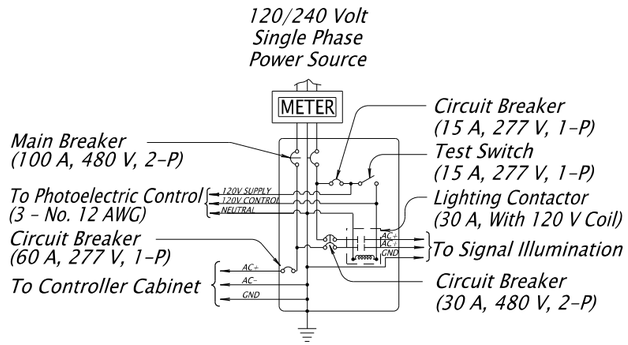

SERVICE CABINET WIRING WITH 240 VOLT ILLUMINATION BMCL

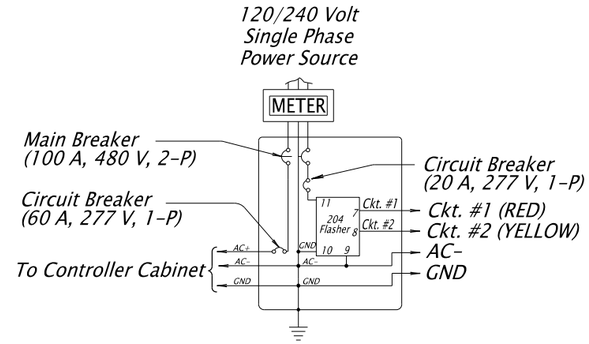

SERVICE CABINET WIRING WITH FLASHER BMCF

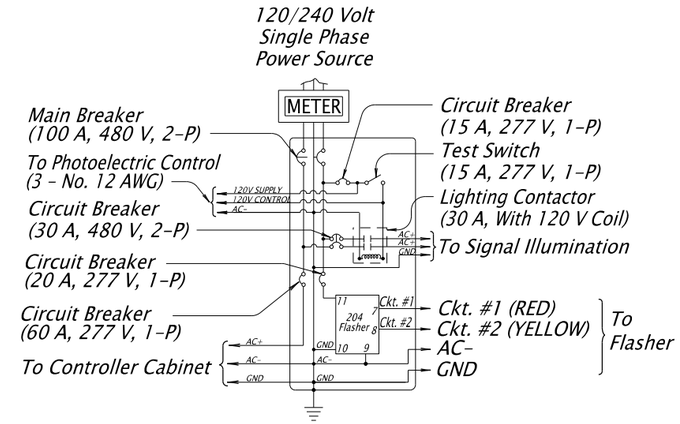

SERVICE CABINET WIRING FOR SIGNAL, FLASHER & 240 VOLT ILLUMINATION BMCFL

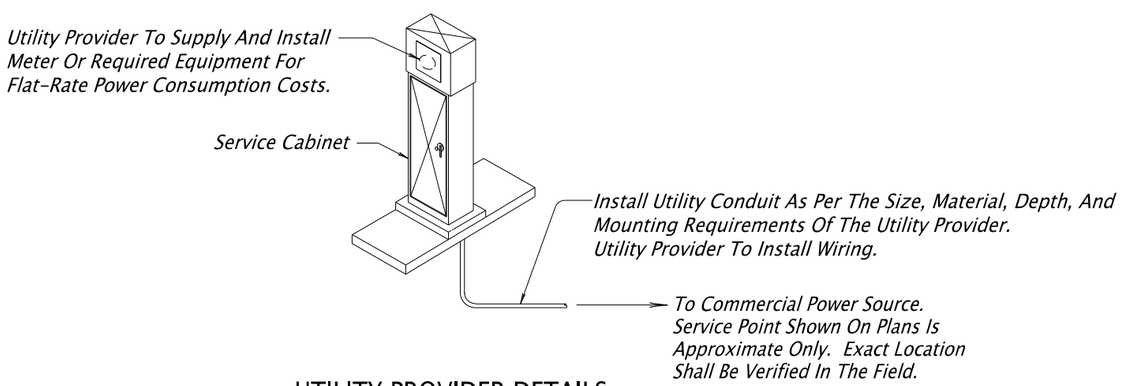

UTILITY PROVIDER DETAILS

General Notes:

1. Notify Utility Before Making Any Connections To Utility Poles.
2. Service Cabinet Shall Have A Solid Copper Neutral Bus And The Number And Size Of Switches Or Circuit Breakers As Shown.
3. Wiring Connections To The Terminal Screws On The Circuit Breakers And Contactors Shall Make Full Contact Under The Screw Head.
4. Circuit Breakers Shall Be UL489 Listed, Unenclosed, Molded Case Bolt-On Type With End Conductor Terminals Suitable For Surface Mounting In The Cabinet On A False Back Or Bracket.
5. Label Circuit Breakers And Equipment With An Engraved Permanent Label On The Dead Front Panel To Indicate The Circuit Controlled.

CALC. BOOK NO. N/A

SDR REPORT DATE 2-Jul-2020

NOTE: All material and workmanship shall be in accordance with the current Oregon Standard Specifications

The selection and use of this Standard Drawing, while designed in accordance with generally accepted engineering principles and practices, is the sole responsibility of the user and should not be used without consulting a Registered Professional Engineer.

OREGON STANDARD DRAWINGS

SERVICE CABINET WIRING DETAILS

2021

DATE	REVISION DESCRIPTION

TM485

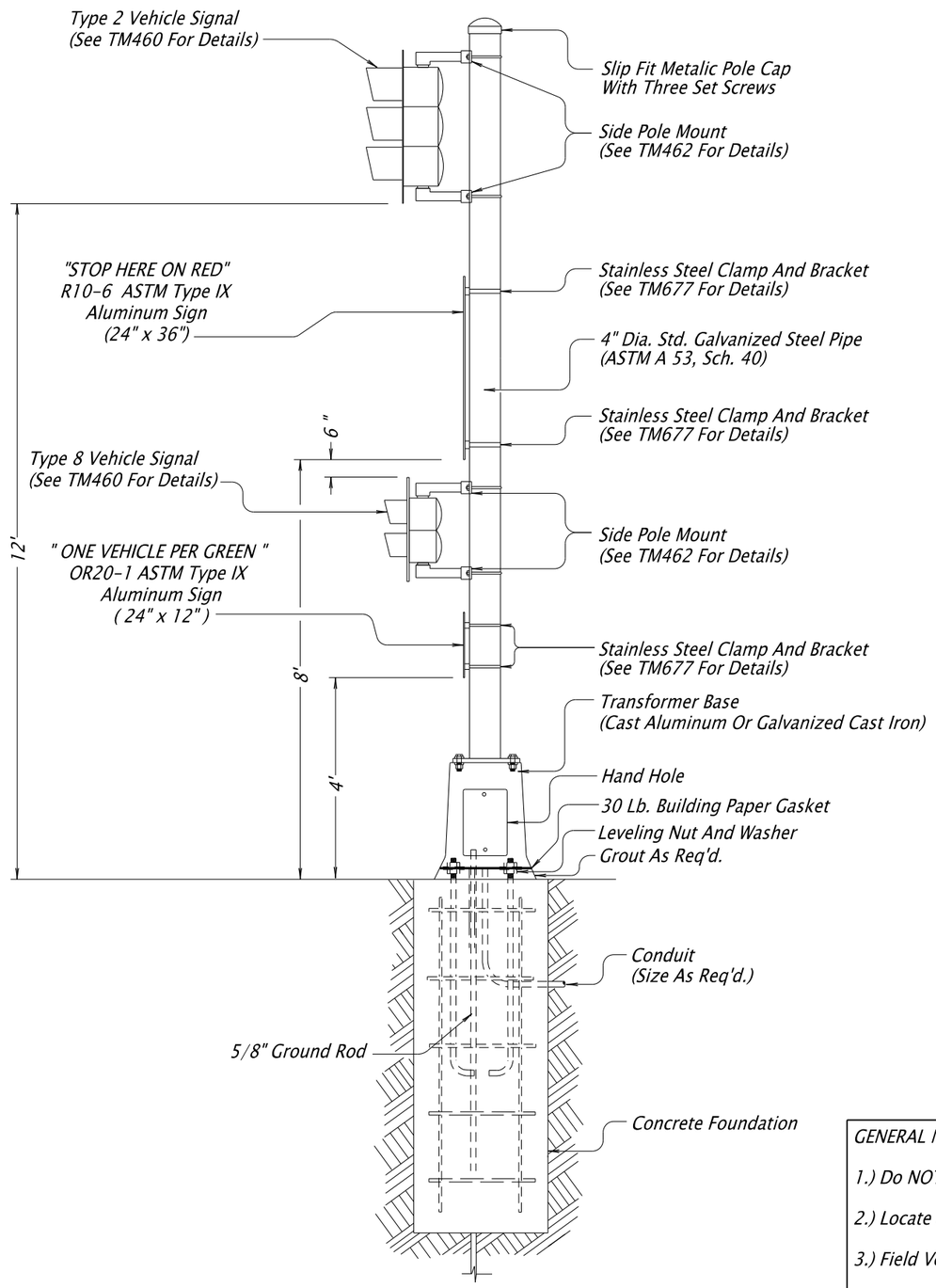

RAMP METER PEDESTAL

(See TM457 (Vehicle Signal Pedestal) For Additional Details)

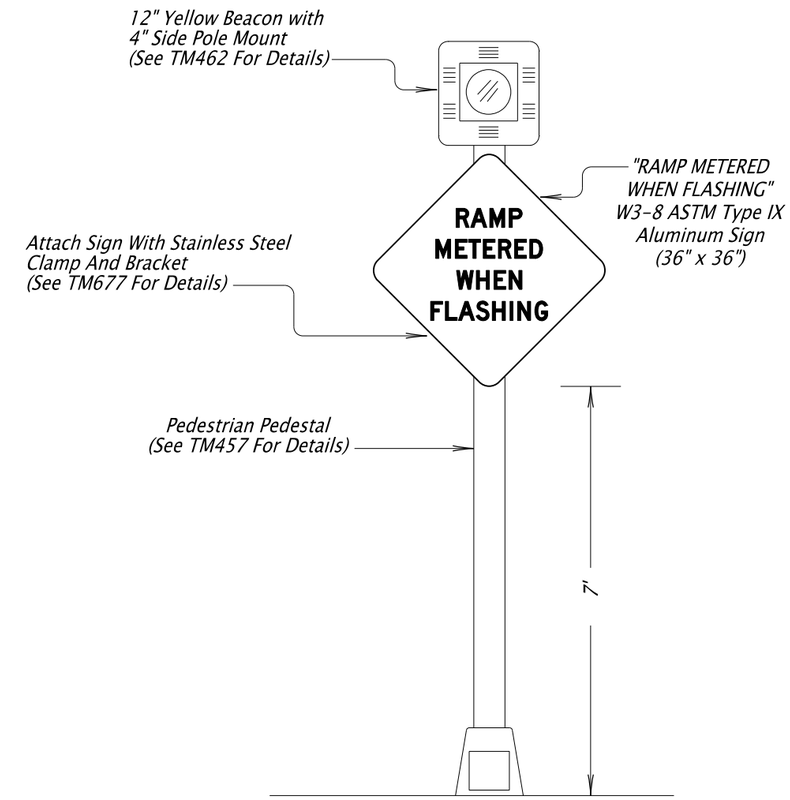

TYPICAL RAMP METER
ADVANCE WARNING SIGNS

GENERAL NOTES:

1.) Do NOT Install Signal Poles Within Paved Gore Area.

2.) Locate Ramp Meter Pedestal 10 Feet Beyond Stop Line.

3.) Field Verify Pole Lengths To Maintain Clearances.

The selection and use of this Standard Drawing, while designed in accordance with generally accepted engineering principles and practices, is the sole responsibility of the user and should not be used without consulting a Registered Professional Engineer.

CALC. BOOK NO. N/A

SDR REPORT DATE 2-Jul-2020

NOTE: All material and workmanship shall be in accordance with the current Oregon Standard Specifications

OREGON STANDARD DRAWINGS

RAMP METER PEDESTAL DETAILS

2021

DATE	REVISION DESCRIPTION

TM492

Effective Date: December 1, 2020 - May 31, 2021

W

4" WHITE LINE

W-2

8" WHITE LINE

Y

4" YELLOW LINE

CH

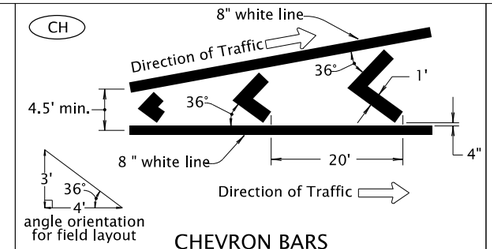

CHEVRON BARS
1' WHITE BARS AT 20' SPACING

TM

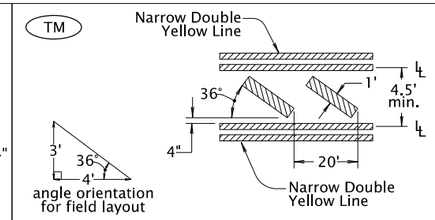

TRANSVERSE MEDIAN BARS
1' YELLOW BARS AT 20' SPACING

WB

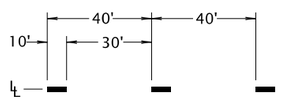

4" WHITE BROKEN LINE

YB

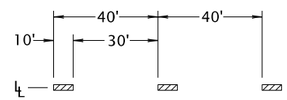

4" YELLOW BROKEN LINE

WD

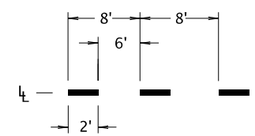

4" WHITE DOTTED LINE
For lane extensions

WD-2

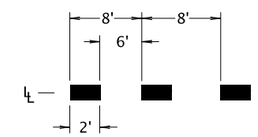

8" WHITE DOTTED LINE
For lane extensions and bike lane extensions

YD

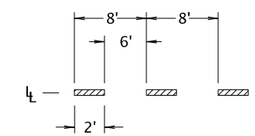

4" YELLOW DOTTED LINE
For lane extensions

DLL

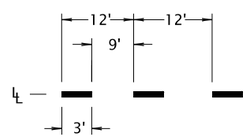

4" WHITE DOTTED LANE LINE
For lane lines in acceleration/deceleration lanes

DLL-2

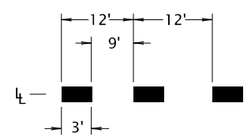

8" WHITE DOTTED LANE LINE
For lane lines in drop lanes

NPR

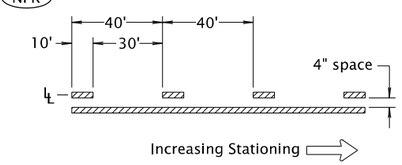

NO-PASS RIGHT
4" YELLOW LINES

NPL

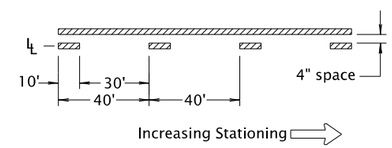

NO-PASS LEFT
4" YELLOW LINES

TWL

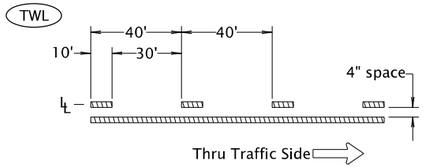

TWO-WAY LEFT TURN
4" YELLOW LINES

TM-40

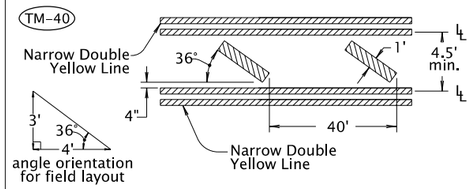

TRANSVERSE MEDIAN BARS
1' YELLOW BARS AT 40' SPACING
For use at painted medians where
distance between left turn refuges exceeds 200'

D

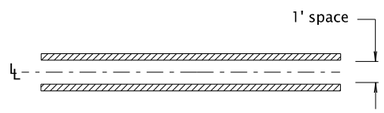

DOUBLE NO-PASS
TWO 4" YELLOW LINES

ND

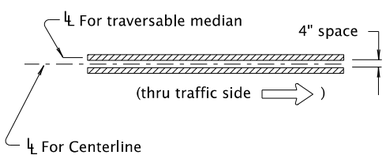

NARROW DOUBLE NO-PASS
TWO 4" YELLOW LINES

NDW

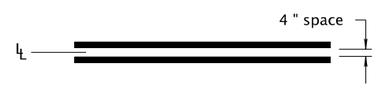

NARROW DOUBLE NO-LANE CHANGE
TWO 4" WHITE LINES

TS

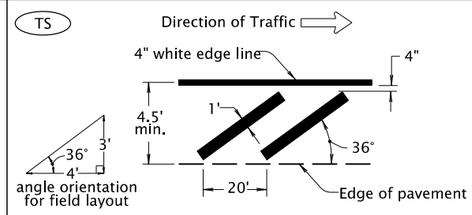

TRANSVERSE SHOULDER BARS
1' WHITE BARS AT 20' SPACING

HC

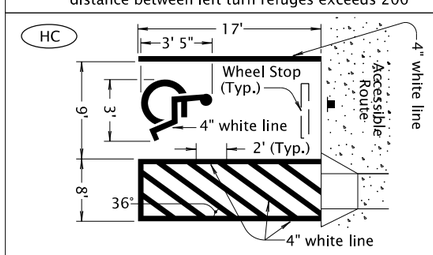

DISABLED PARKING DETAIL (white)

YLD

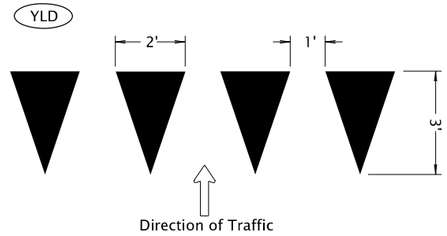

YIELD LINE (white)

BYLD

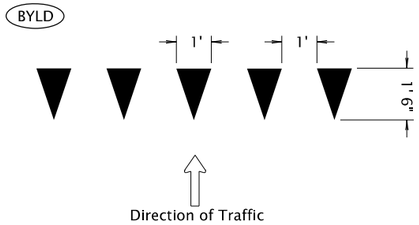

BICYCLE YIELD LINE (white)

LEGEND

Direction Of Traffic, Increasing Stationing
Or Thru Traffic Side

℄ — Lane line dimensions are shown on the
striping plans

CALC. BOOK NO. N/A

SDR DATE 07/01/2020

NOTE: All material and workmanship shall be in accordance with the current Oregon Standard Specifications.

The selection and use of this Standard Drawing, while designed in accordance with generally accepted engineering principles and practices, is the sole responsibility of the user and should not be used without consulting a Registered Professional Engineer.

OREGON STANDARD DRAWINGS

PAVEMENT MARKING STANDARD DETAIL BLOCKS

2021

DATE	REVISION DESCRIPTION
07/2020	Changed Min. widths for CH, TM, TM-40, and TS

TM500

Effective Date: December 01, 2020 - May 31, 2021

SA

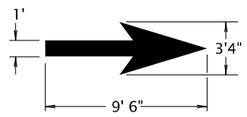

STRAIGHT ARROW (white)

For arrow proportion details, see current version of Standard Highway Signs

LA

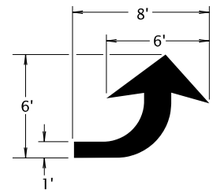

LEFT TURN ARROW (white)

For arrow proportion details, see current version of Standard Highway Signs

RA

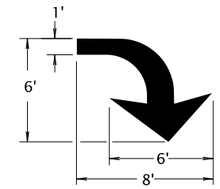

RIGHT TURN ARROW (white)

For arrow proportion details, see current version of Standard Highway Signs

LSA

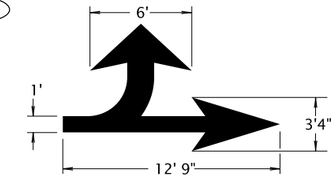

LEFT TURN STRAIGHT ARROW (white)

For arrow proportion details, see current version of Standard Highway Signs

RSA

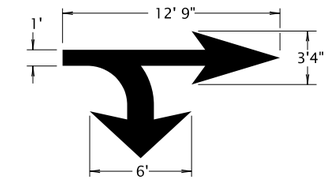

RIGHT TURN STRAIGHT ARROW (white)

For arrow proportion details, see current version of Standard Highway Signs

RALA

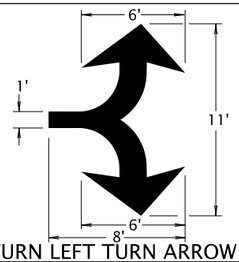

RIGHT TURN LEFT TURN ARROW (white)

For arrow proportion details, see current version of Standard Highway Signs

RSLA

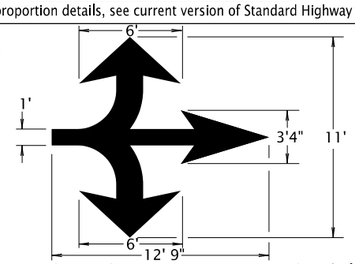

RIGHT TURN STRAIGHT LEFT TURN ARROW (white)

For arrow proportion details, see current version of Standard Highway Signs

E-SA

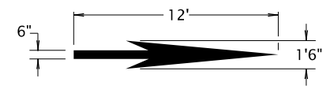

ELONGATED STRAIGHT ARROW (white)

For arrow proportion details, see current version of Standard Highway Signs

E-LA

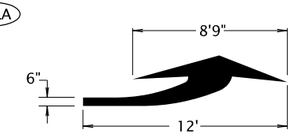

ELONGATED LEFT TURN ARROW (white)

For arrow proportion details, see current version of Standard Highway Signs

E-RA

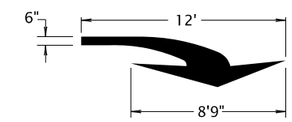

ELONGATED RIGHT TURN ARROW (white)

For arrow proportion details, see current version of Standard Highway Signs

E-LSA

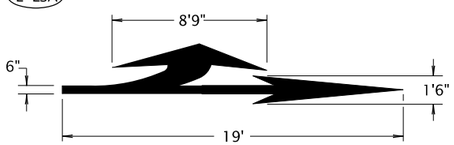

ELONGATED LEFT TURN STRAIGHT ARROW (white)

For arrow proportion details, see current version of Standard Highway Signs

E-RSA

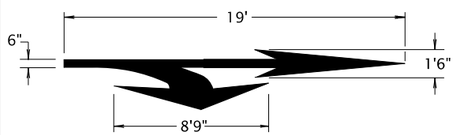

ELONGATED RIGHT TURN STRAIGHT ARROW (white)

For arrow proportion details, see current version of Standard Highway Signs

E-RALA

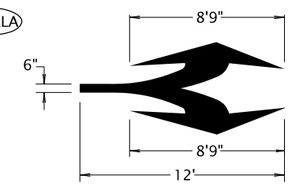

ELONGATED RIGHT TURN LEFT TURN ARROW (white)

For arrow proportion details, see current version of Standard Highway Signs

E-RSLA

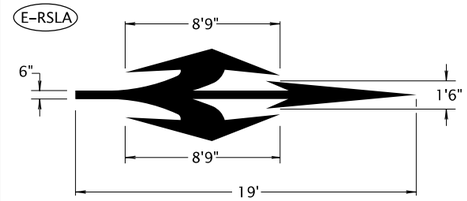

ELONGATED RIGHT TURN STRAIGHT LEFT TURN ARROW (white)

For arrow proportion details, see current version of Standard Highway Signs

F-LA

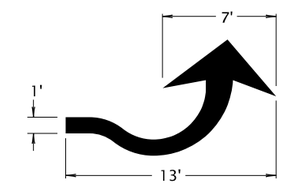

FISH-HOOK LEFT TURN ARROW (white)

For arrow proportion details, see the current ODOT Traffic Line Manual

F-RALA

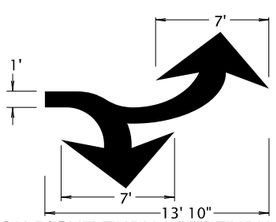

FISH-HOOK RIGHT TURN LEFT TURN ARROW (white)

For arrow proportion details, see the current ODOT Traffic Line Manual

F-SA

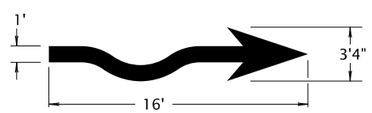

FISH-HOOK STRAIGHT ARROW (white)

For arrow proportion details, see the current ODOT Traffic Line Manual

F-RSA

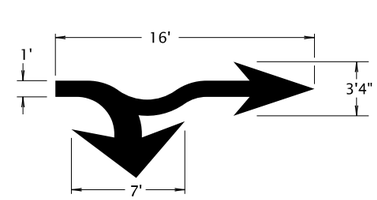

FISH-HOOK RIGHT TURN SRAIGHT ARROW (white)

For arrow proportion details, see the current ODOT Traffic Line Manual

F-LSA

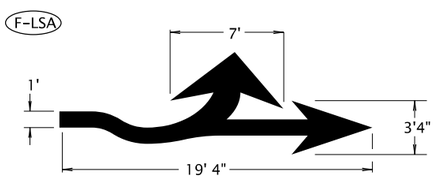

FISH-HOOK LEFT TURN STRAIGHT ARROW (white)

For arrow proportion details, see the current ODOT Traffic Line Manual

F-RSLA

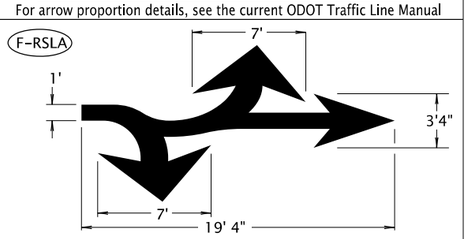

FISH-HOOK RIGHT TURN STRAIGHT LEFT TURN ARROW (white)

For arrow proportion details, see the current ODOT Traffic Line Manual

LRA-R

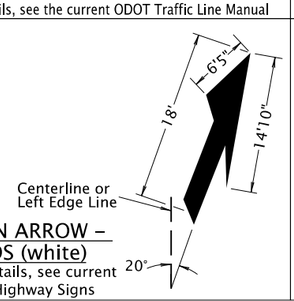

LANE REDUCTION ARROW - LEFT LANE ENDS (white)

For arrow proportion details, see current version of Standard Highway Signs

LRA-R

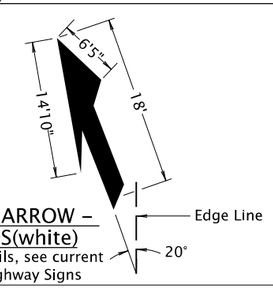

LANE REDUCTION ARROW - RIGHT LANE ENDS(white)

For arrow proportion details, see current version of Standard Highway Signs

WWA

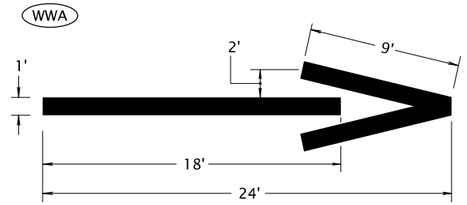

WRONG-WAY ARROW (white)

General Note:

1. Center pavement markings within the lane width.
2. Arrow and letter dimensions nominal, excluding WWA.

CALC. BOOK NO. N/A

SDR DATE 07/01/2020

The selection and use of this Standard Drawing, while designed in accordance with generally accepted engineering principles and practices, is the sole responsibility of the user and should not be used without consulting a Registered Professional Engineer.

NOTE: All material and workmanship shall be in accordance with the current Oregon Standard Specifications.

OREGON STANDARD DRAWINGS

PAVEMENT MARKING STANDARD DETAIL BLOCKS

2021

DATE	REVISION DESCRIPTION
07/2020	Some Detail Blocks moved to new Std. Drawing TM504
	Fish-hook Arrows added, LRA split into LRA-L and LRA-R

TM501

Effective Date: December 01, 2020 - May 31, 2021

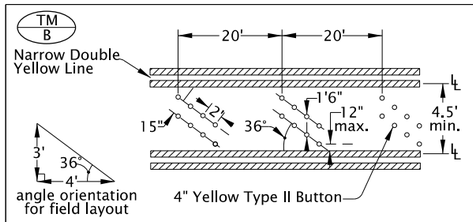

TRANSVERSE MEDIAN BAR SUBSTITUTION BUTTON

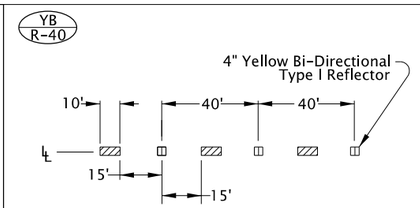

YELLOW BROKEN LINE SUPPLEMENTATION REFLECTORS WITH 4" YELLOW BROKEN LINE

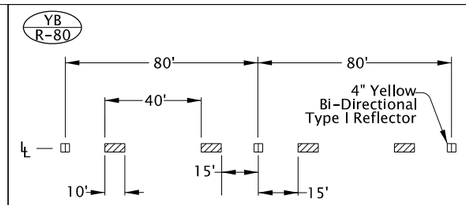

YELLOW BROKEN LINE SUPPLEMENTATION REFLECTORS WITH 4" YELLOW BROKEN LINE

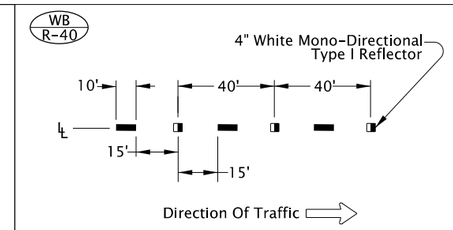

WHITE BROKEN LINE SUPPLEMENTATION REFLECTORS WITH 4" WHITE BROKEN LINE

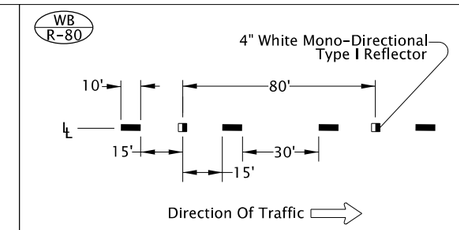

WHITE BROKEN LINE SUPPLEMENTATION REFLECTORS WITH 4" WHITE BROKEN LINE

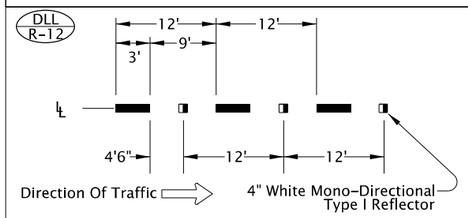

WHITE DOTTED LANE LINE SUPPLEMENTATION REFLECTORS WITH 4" WHITE DOTTED LANE LINE

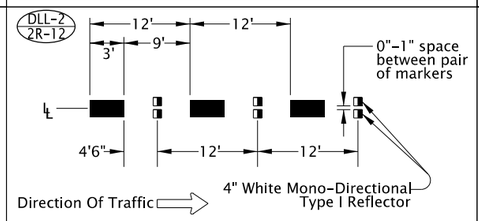

WIDE DOTTED LANE LINE SUPPLEMENTATION REFLECTORS WITH 8" WHITE DOTTED LANE LINE

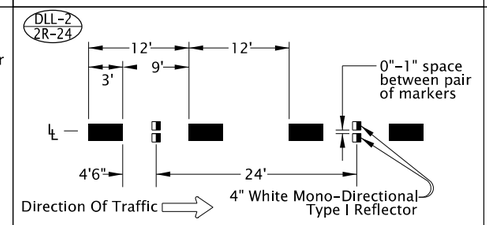

WIDE DOTTED LANE LINE SUPPLEMENTATION REFLECTORS WITH 8" WHITE DOTTED LANE LINE

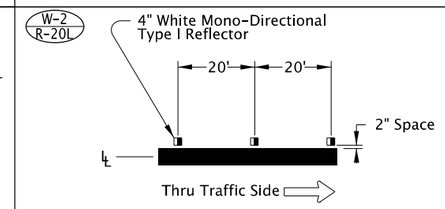

CHANNELIZING LINE POSITIONING GUIDE REFLECTORS WITH 8" WHITE LINE

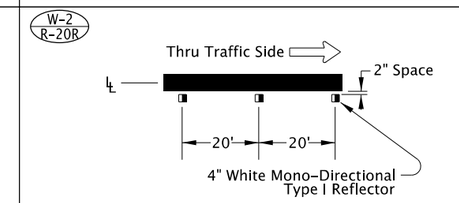

CHANNELIZING LANE LINE POSITIONING GUIDE REFLECTORS WITH 8" WHITE LINE

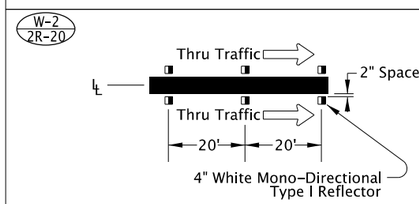

CHANNELIZING LANE LINE POSITIONING GUIDE REFLECTORS WITH 8" WHITE LINE

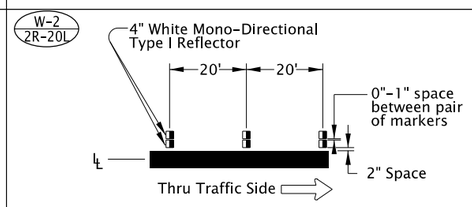

CHANNELIZING LINE SUPPLEMENTATION REFLECTORS WITH 8" WHITE LINE

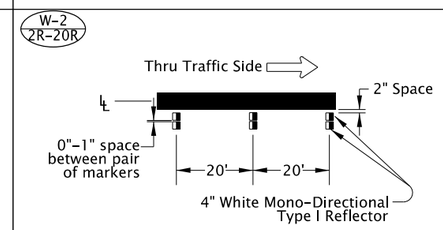

CHANNELIZING LINE SUPPLEMENTATION REFLECTORS WITH 8" WHITE LINE

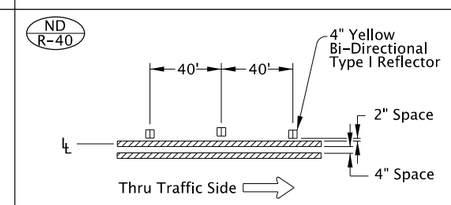

NARROW DOUBLE YELLOW POSITIONING GUIDE REFLECTORS WITH TWO 4" YELLOW LINES

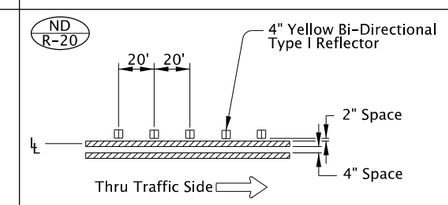

NARROW DOUBLE YELLOW POSITIONING GUIDE REFLECTORS WITH TWO 4" YELLOW LINES

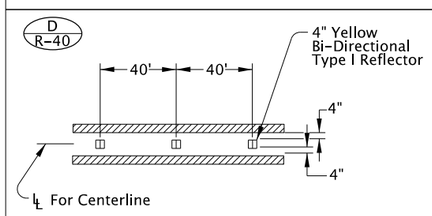

DOUBLE NO-PASS POSITIONING GUIDE REFLECTORS WITH TWO 4" YELLOW LINES

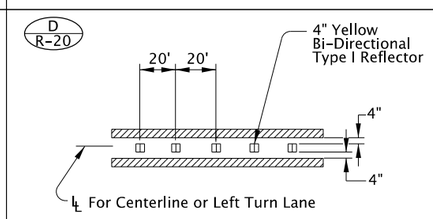

DOUBLE NO-PASS POSITIONING GUIDE REFLECTORS WITH TWO 4" YELLOW LINES

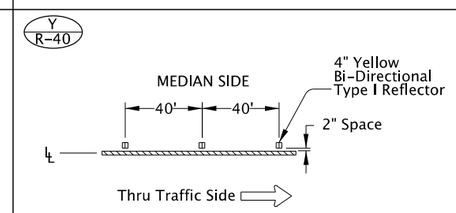

YELLOW LINE POSITIONING GUIDE REFLECTORS WITH 4" YELLOW LINE

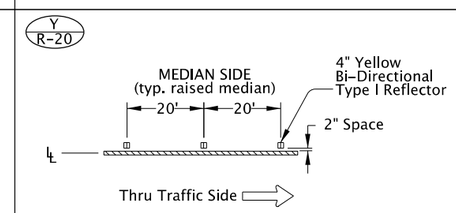

YELLOW LINE POSITIONING GUIDE REFLECTORS WITH 4" YELLOW LINE

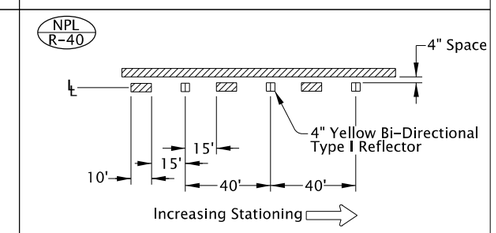

NO-PASS LEFT POSITIONING GUIDE REFLECTORS WITH 4" YELLOW LINES

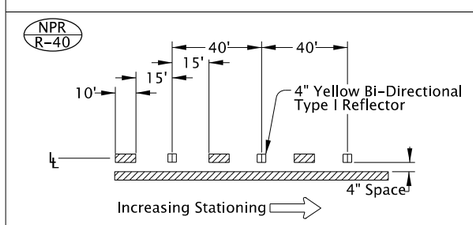

NO-PASS RIGHT POSITIONING GUIDE REFLECTORS WITH 4" YELLOW LINES

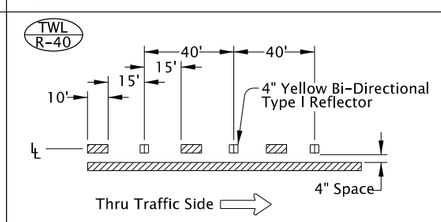

TWO WAY LEFT TURN POSITIONING GUIDE REFLECTORS WITH 4" YELLOW LINES

General note:

1) Surface mount Raised Pavement Markers (RPMs) unless otherwise specified.

LEGEND

- Direction Of Travel, Increasing Stationing or Thru Traffic Side
- Lane line dimensions are shown on the striping plans
- Mono-directional crystal white marker reflects white to the left in this symbol
- Bi-directional yellow marker reflects yellow both left and right in this symbol

CALC. BOOK NO. N/A

SDR DATE 07/01/2020

The selection and use of this Standard Drawing, while designed in accordance with generally accepted engineering principles and practices, is the sole responsibility of the user and should not be used without consulting a Registered Professional Engineer.

NOTE: All material and workmanship shall be in accordance with the current Oregon Standard Specifications.

OREGON STANDARD DRAWINGS

PAVEMENT MARKING STANDARD DETAIL BLOCKS

2021

DATE	REVISION DESCRIPTION
07/2020	*Changed min. width of TM/B from 6' to 4.5'*

TM502

Effective Date: December 01, 2020 - May 31, 2021

RR

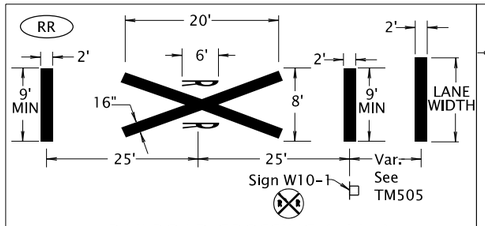

RAILROAD CROSSING (white)

Install per ODOT Rail Crossing Order or as shown.

For letter proportion details, see current version of Standard Highway Signs

NRR

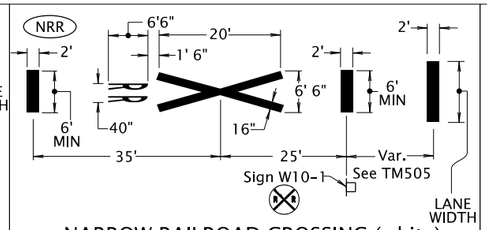

NARROW RAILROAD CROSSING (white)

Install per ODOT Rail Crossing Order or as shown.

For letter proportion details, see current version of Standard Highway Signs

BRR

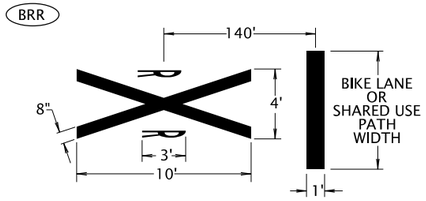

BICYCLE RAILROAD CROSSING (white)

Install per ODOT Rail Crossing Order or as shown.

For letter proportion details, see current version of Standard Highway Signs

HOV

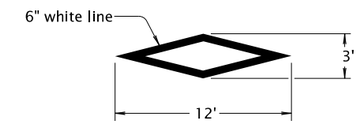

HIGH-OCCUPANCY VEHICLE DIAMOND DETAIL (white)

CG

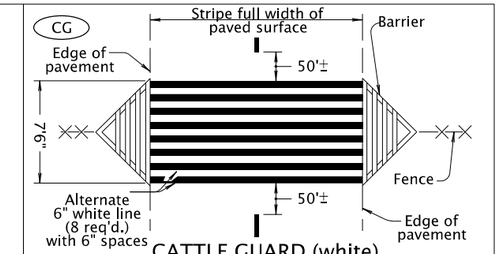

CATTLE GUARD (white)

For barrier and fence details, see Std. Dwg. RD110

LRT

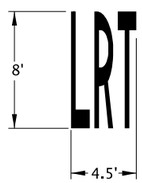

LIGHT RAIL TRANSIT (white)

Center marking within lane width

For letter proportion details, see current version of Standard Highway Signs

YB-SP

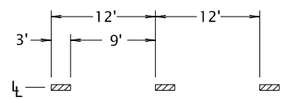

4" YELLOW SHARED PATH BROKEN LINE

CH-BS

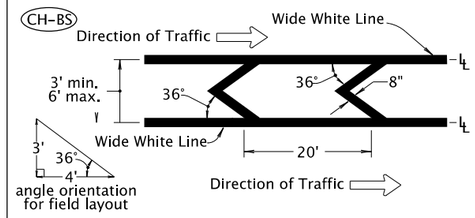

CHEVRON BARS - BUFFER SPACE
8" WHITE BARS AT 20' SPACING

General Note:

1. Center pavement markings within the lane width.
2. Arrow and letter dimensions nominal, excluding WWA.

Direction Of Traffic, Increasing Stationing
Or Thru Traffic Side

CALC. BOOK NO. N/A

SDR DATE 07/01/2020

NOTE: All material and workmanship shall be in accordance with the current Oregon Standard Specifications.

The selection and use of this Standard Drawing, while designed in accordance with generally accepted engineering principles and practices, is the sole responsibility of the user and should not be used without consulting a Registered Professional Engineer.

OREGON STANDARD DRAWINGS

PAVEMENT MARKING STANDARD DETAIL BLOCKS

2021

DATE	REVISION DESCRIPTION
07/2020	*New drawing for additional Detail Blocks*

TM504

Effective Date: December 01, 2020 - May 31, 2021

TM504

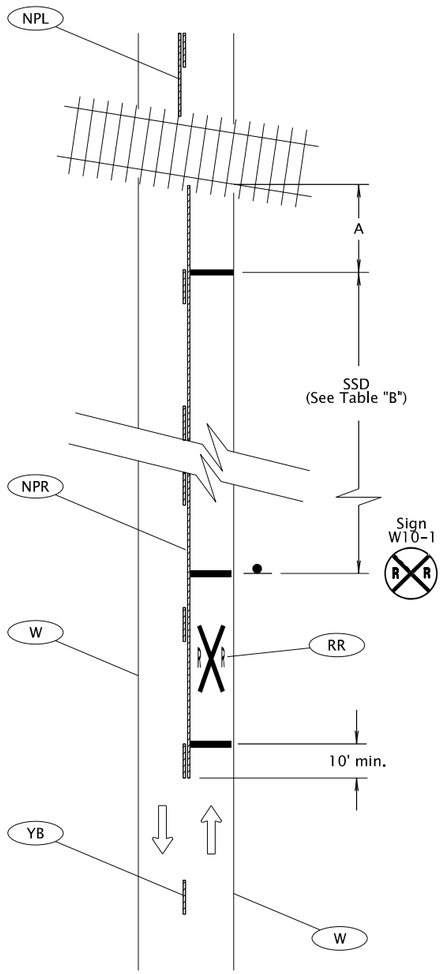

TYPICAL RAILROAD GRADE CROSSING MARKINGS
NO BIKE LANE

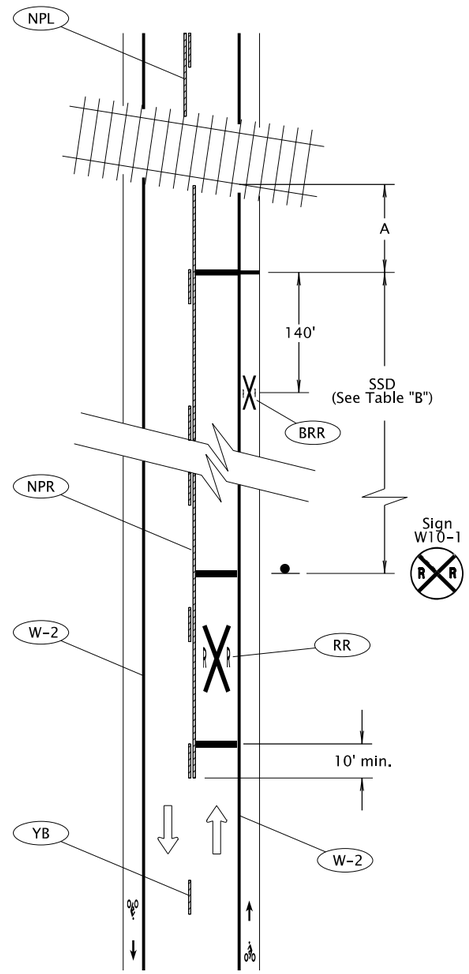

TYPICAL RAILROAD GRADE CROSSING MARKINGS
WITH BIKE LANE

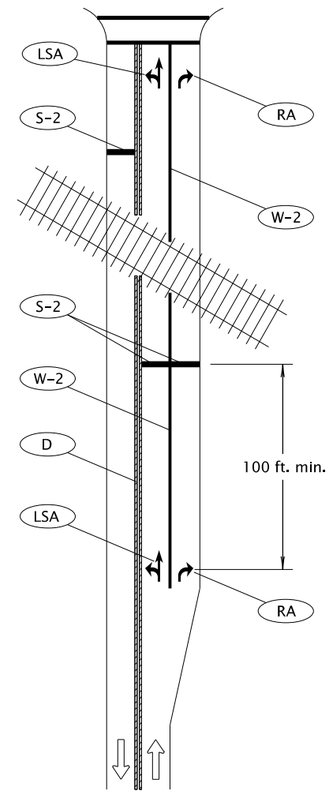

Do not place lane use arrows between the RxR stop bar and the tracks.

Lane use signing required if lane use arrows cannot be installed.

LANE USE ARROW MARKINGS APPROACHING
RAILROAD GRADE CROSSING
AT INTERSECTIONS WITH MULTIPLE LANES

Table "B"

Posted Speed (mph)	Safe Stopping Distance SSD (In feet)
10	50 (100 Standard)
15	80 (100 Standard)
20	115
25	155
30	200
35	250
40	305
45	360
50	425
55	495
60	570
65	645

A = 12' min. from nearest rail or 1' in advance of the location where an automatic gate arm crosses the roadway. Install stop bar perpendicular to roadway.

General Notes:

1) See OAR Chapter 741-110 for details.
2) Install all markings per Crossing Order or as shown.
3) Start and end all longitudinal lines within 2 ft. of the nearest rail.
4) See TM501 for RR and BRR legend dimensions.

LEGEND

Increasing stationing from bottom to top

Direction of Travel

This sheet to be accompanied by Std. Dwg. Nos. TM500 thru TM504

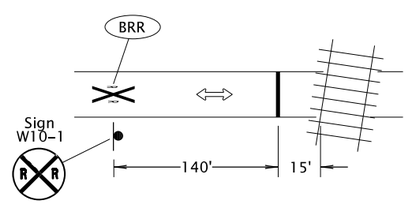

TYPICAL SHARED USE PATH
RAILROAD GRADE CROSSING MARKINGS

CALC. BOOK NO. N/A

SDR DATE 07/01/2020

NOTE: All material and workmanship shall be in accordance with the current Oregon Standard Specifications.

The selection and use of this Standard Drawing, while designed in accordance with generally accepted engineering principles and practices, is the sole responsibility of the user and should not be used without consulting a Registered Professional Engineer.

OREGON STANDARD DRAWINGS

RAIL CROSSING PAVEMENT MARKINGS

2021

DATE	REVISION DESCRIPTION
07/2020	Extended accompanied by drawings to include TM504

TM505

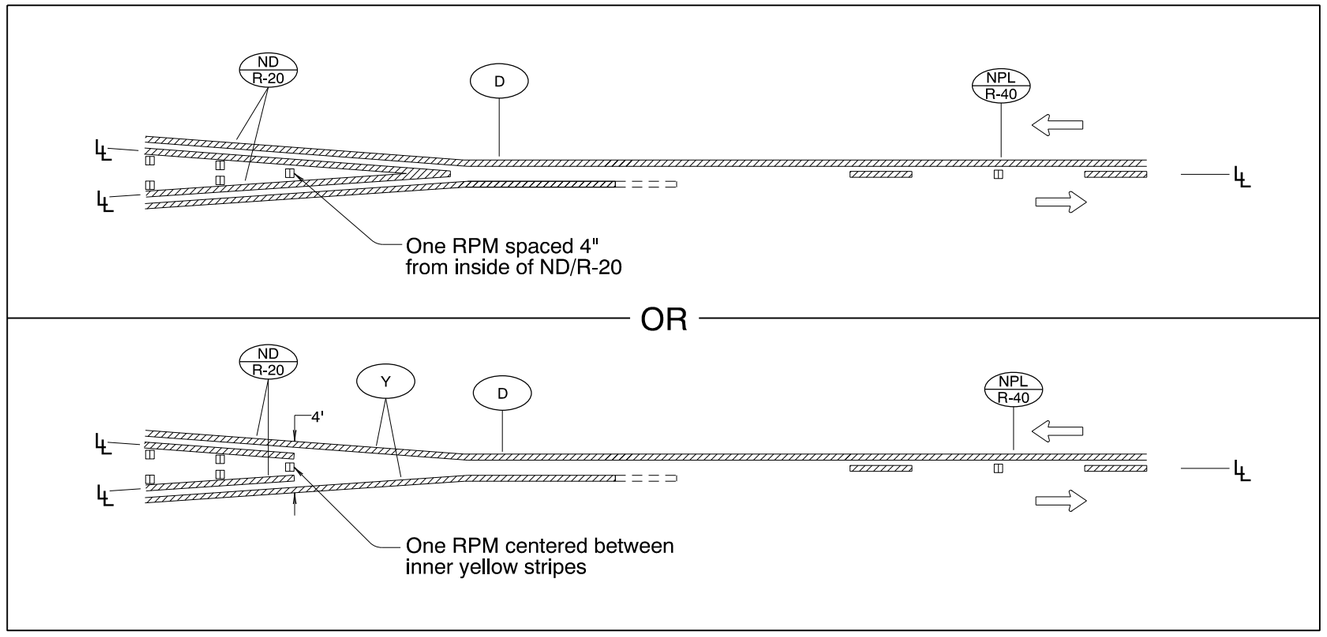

MEDIAN WIDTH TRANSITION

(TWO NARROW DOUBLE YELLOW LINES TO ONE-DIRECTION NO-PASSING LINE)

(Refer to TM539 for additional details)

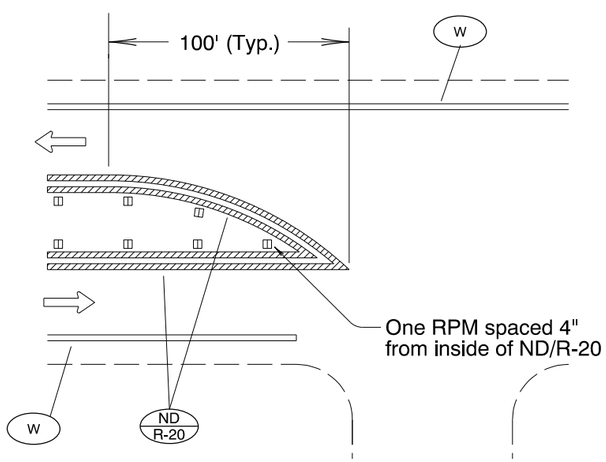

MEDIAN BULLNOSE DETAIL

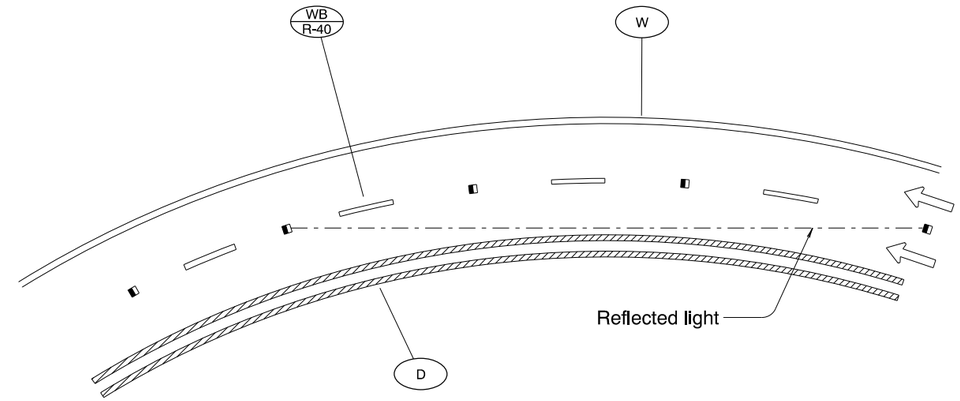

NOTE:

On one way sections the marker shall be installed with the reflective surface aimed to direct the reflected light back three markers.

(a) PAVEMENT MARKER INSTALLATION FOR MONO-DIRECTIONAL RAISED PAVEMENT MARKERS

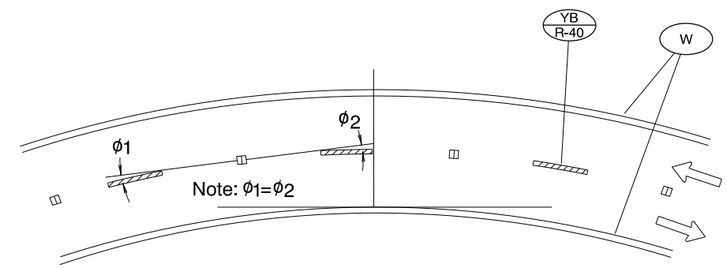

(b) PAVEMENT MARKER INSTALLATION FOR BI-DIRECTIONAL RAISED PAVEMENT MARKERS

PAVEMENT MARKER INSTALLATION ON HORIZONTAL CURVES

LEGEND

- Mono-Directional White (marker reflects white to left in this symbol)
- Bi-Directional Yellow (marker reflects yellow to both the left and right in this symbol)
- Increasing stationing from left to right
- Direction of Travel
- ℄ — Lane line dimensions are shown on the striping plans.

To be accompanied by Standard Dwg. Nos. TM500 thru TM504

CALC. BOOK NO. N/A

SDR DATE July 1, 2015

NOTE: All material and workmanship shall be in accordance with the current Oregon Standard Specifications

The selection and use of this Standard Drawing, while designed in accordance with generally accepted engineering principles and practices, is the sole responsibility of the user and should not be used without consulting a Registered Professional Engineer.

OREGON STANDARD DRAWINGS

PAVEMENT MARKERS

2021

DATE	REVISION DESCRIPTION
7/10/20	Adjusted detail and changed drawing reference

TM515.dgn 1-3-2017

TM515

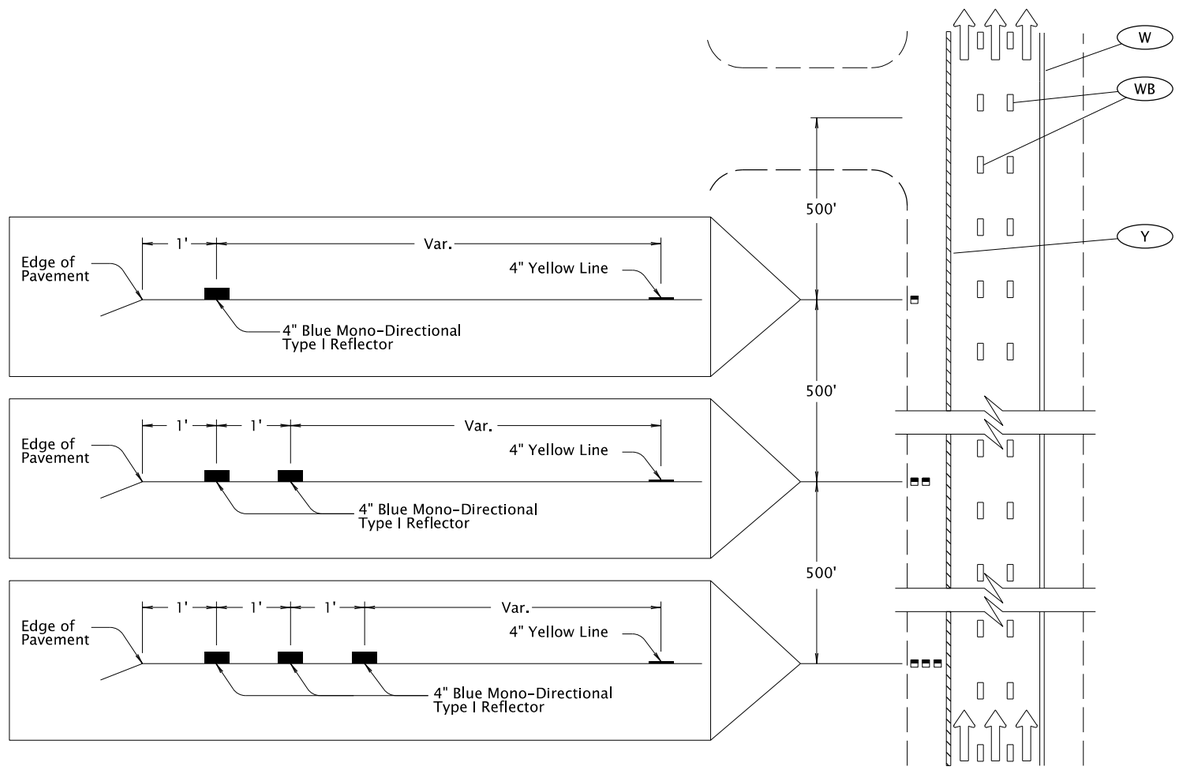

FREEWAY MEDIAN CROSSOVER ADVANCE REFLECTOR MARKER DETAIL

LEGEND

Mono-Directional Blue (marker reflects blue to left in this symbol)

Direction of Travel

To be accompanied by Standard Dwg. Nos. TM500 thru TM504

CALC. BOOK NO. N/A

SDR DATE 07/01/2020

NOTE: All material and workmanship shall be in accordance with the current Oregon Standard Specifications.

The selection and use of this Standard Drawing, while designed in accordance with generally accepted engineering principles and practices, is the sole responsibility of the user and should not be used without consulting a Registered Professional Engineer.

OREGON STANDARD DRAWINGS

RAISED PAVEMENT MARKERS: FREEWAY MEDIAN CROSSOVER

2021

DATE	REVISION DESCRIPTION
07/2020	*Extended accompanied by drawings to include TM504*

TM516

Effective Date: December 01, 2020 - May 31, 2021

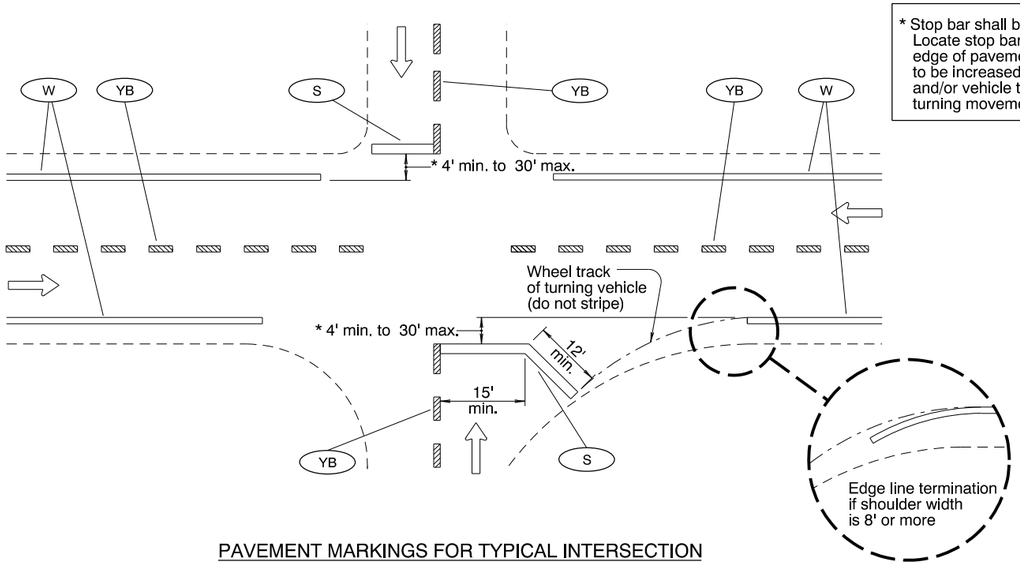

PAVEMENT MARKINGS FOR TYPICAL INTERSECTION

* Stop bar shall be placed as near as possible to the intersecting traveled way. Locate stop bar 4' min. to 30' max. in advance of the extended fog line, edge of pavement, or curb face. Minimum stop bar distance may need to be increased, depending on location of pedestrian ramps (see Detail "A") and/or vehicle turn radii (see Detail "B"). Field verify sight distance and truck turning movements.

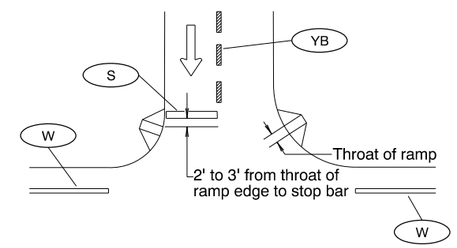

Detail "A"
STOP BAR PLACEMENT WITH
RESPECT TO PEDESTRIAN RAMPS

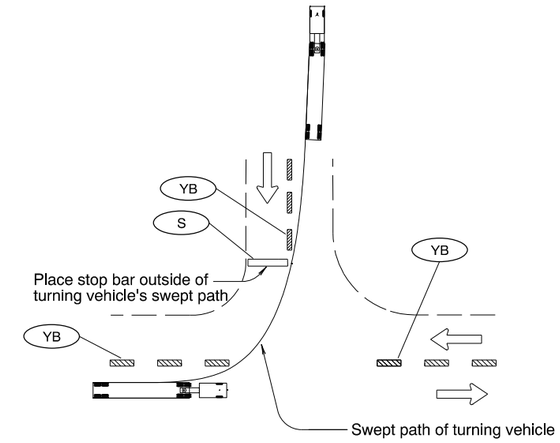

Detail "B"
STOP BAR PLACEMENT WITH
RESPECT TO TURN RADII

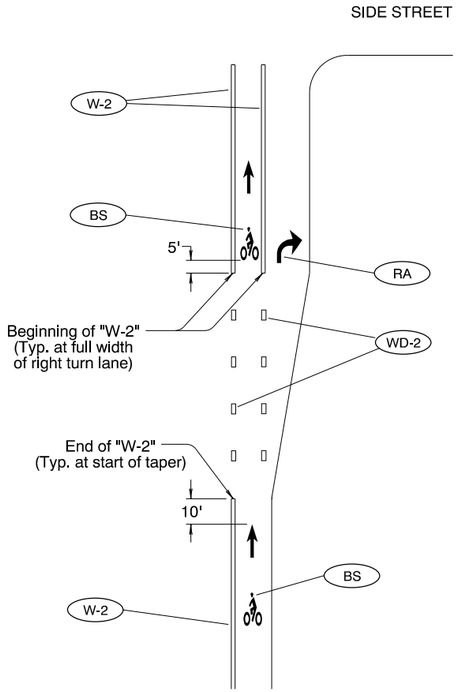

INSTALLATION OF BIKE LANE STENCILS
FOR BIKE LANE SEPARATED BY RIGHT TURN LANE

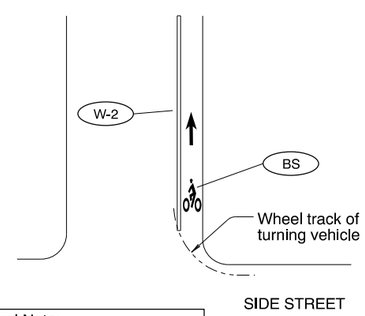

General Note:

Install bike lane stencil to avoid right turning vehicle wheel tracks.

INSTALLATION OF BIKE LANE STENCILS
FOLLOWING INTERSECTIONS

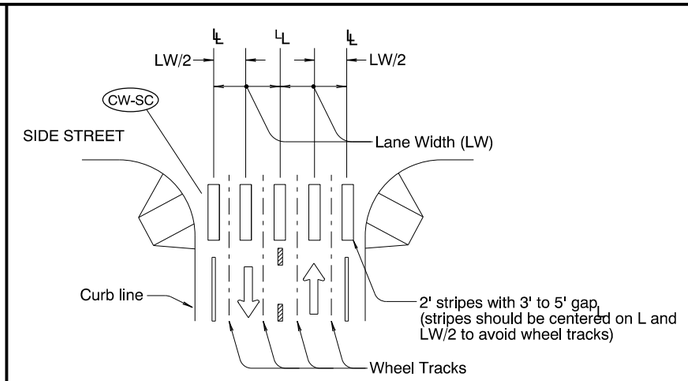

STAGGERED CONTINENTAL LAYOUT

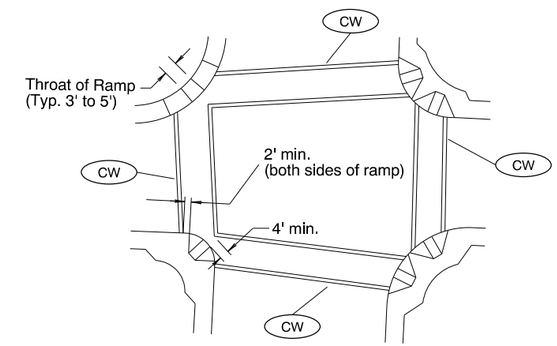

STANDARD CROSSWALK BARS
AT INTERSECTION

To be accompanied by Standard Dwg. Nos. TM500 thru TM504

General Note:

1. Install crosswalk bars such that the throat of the ADA ramp is entirely within crosswalk markings, or 5' back of extended fog line, edge of pavement, or curb face.

LEGEND

Direction of Travel

L - Lane line dimensions are shown on the striping plans

The selection and use of this Standard Drawing, while designed in accordance with generally accepted engineering principles and practices, is the sole responsibility of the user and should not be used without consulting a Registered Professional Engineer.

CALC. BOOK NO. N/A

SDR DATE July 10, 2020

NOTE: All material and workmanship shall be in accordance with the current Oregon Standard Specifications

OREGON STANDARD DRAWINGS

INTERSECTION PAVEMENT MARKINGS (CROSSWALK, STOP BAR & BIKE LANE STENCIL)

2021

DATE	REVISION DESCRIPTION
7/10/20	Changed drawing reference

TM530.dgn 1-3-2017

TM530

plotfile_TM200s_500s.dgn :: Default 7/30/2020 4:09:47 PM hwyr20m

Effective Date: December 1, 2020 - May 31, 2021

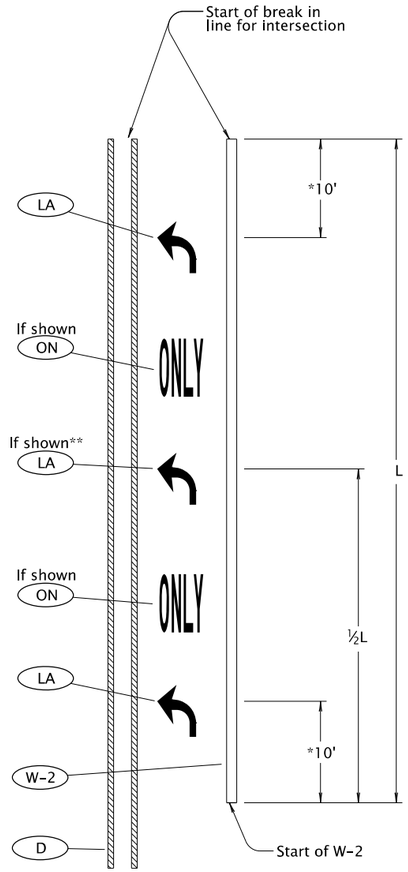

LANE USE ARROW PLACEMENT FOR TURN LANE

DETAIL "A"

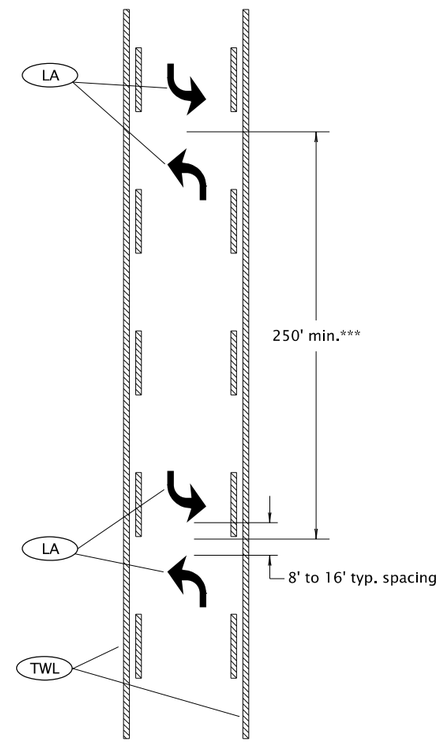

TWO-WAY LEFT TURN LANE ARROW PLACEMENT

DETAIL "B"

General Notes:

1) Center pavement marking legends within the lane.

2) Placement of lane use arrows with respect to the 8" wide white line (W-2) channelization shown in Detail "A" applies to both left and right turn lanes.

3) Center "ONLY" markings between lane use arrows.

* 15' when installing elongated arrows.

** When L is greater than 400', install 3rd lane use arrow at ½ L as shown in Detail "A".

*** Double arrows to be placed at even intervals, proportioned within block or as shown.

To be accompanied by Standard Dwg. Nos. TM500 thru TM504

CALC. BOOK NO. N/A

SDR DATE 07/01/2020

The selection and use of this Standard Drawing, while designed in accordance with generally accepted engineering principles and practices, is the sole responsibility of the user and should not be used without consulting a Registered Professional Engineer.

NOTE: All material and workmanship shall be in accordance with the current Oregon Standard Specifications.

OREGON STANDARD DRAWINGS

TURN ARROW MARKING DETAILS

2021

DATE	REVISION DESCRIPTION
07/2020	Extended accompanied by drawings to include TM504

TM531

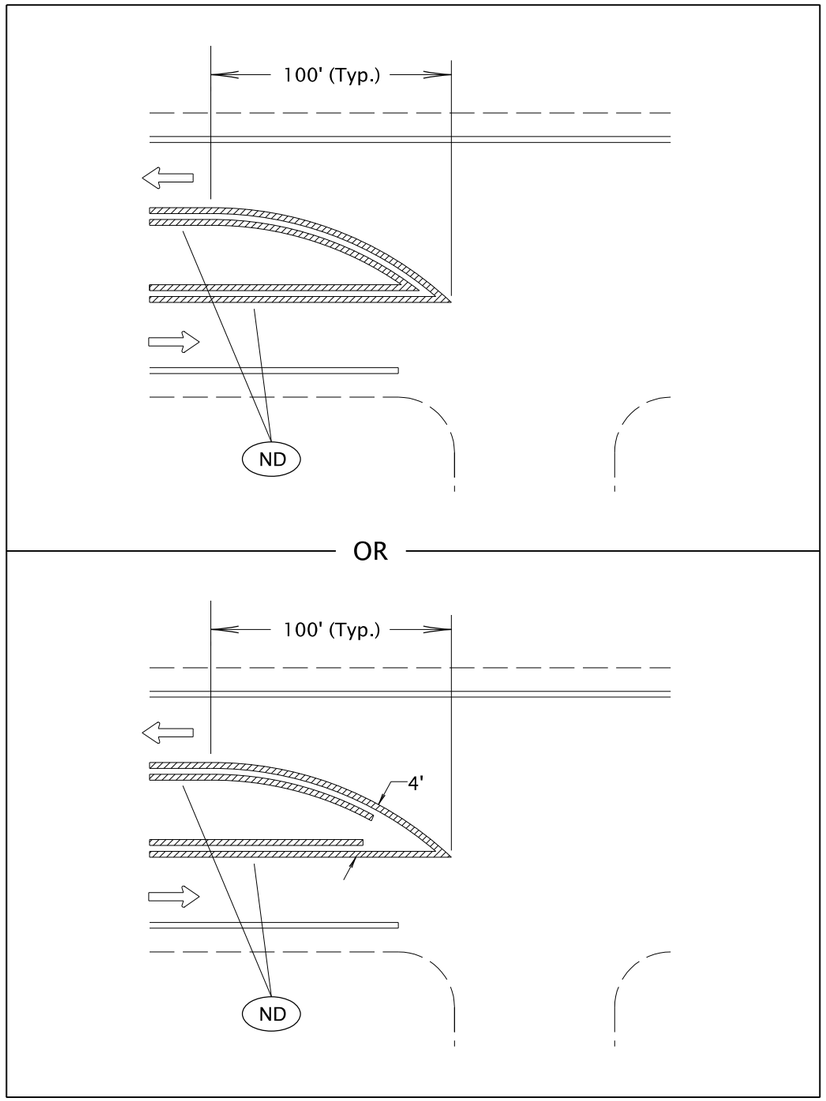

MEDIAN BULLNOSE DETAIL

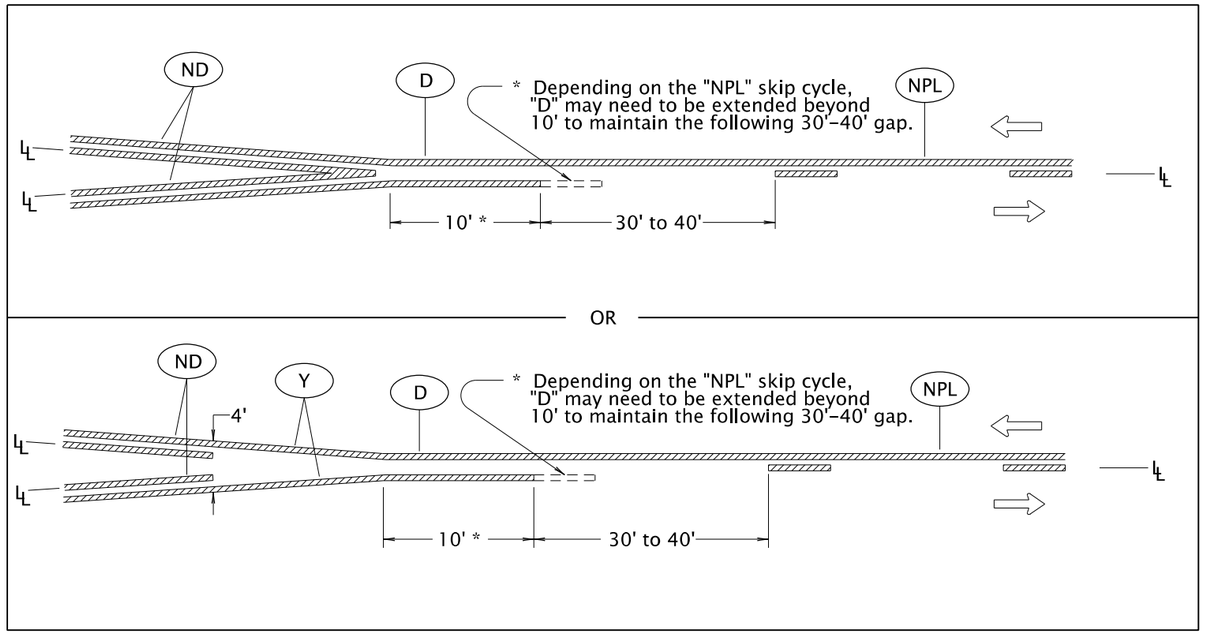

MEDIAN WIDTH TRANSITION
(TWO NARROW DOUBLE YELLOW LINES TO ONE-DIRECTION NO-PASSING LINE)

LEGEND

Increasing stationing from left to right

Direction of Travel

Lane line dimensions are shown on the striping plans

To be accompanied by Standard Dwg. Nos. TM500 thru TM504

CALC. BOOK NO. N/A

SDR DATE 07/01/2020

NOTE: All material and workmanship shall be in accordance with the current Oregon Standard Specifications.

The selection and use of this Standard Drawing, while designed in accordance with generally accepted engineering principles and practices, is the sole responsibility of the user and should not be used without consulting a Registered Professional Engineer.

OREGON STANDARD DRAWINGS

MEDIAN AND LEFT TURN CHANNELIZATION DETAILS

2021

DATE	REVISION DESCRIPTION
07/2020	Extended accompanied by drawings to include TM504

TM539

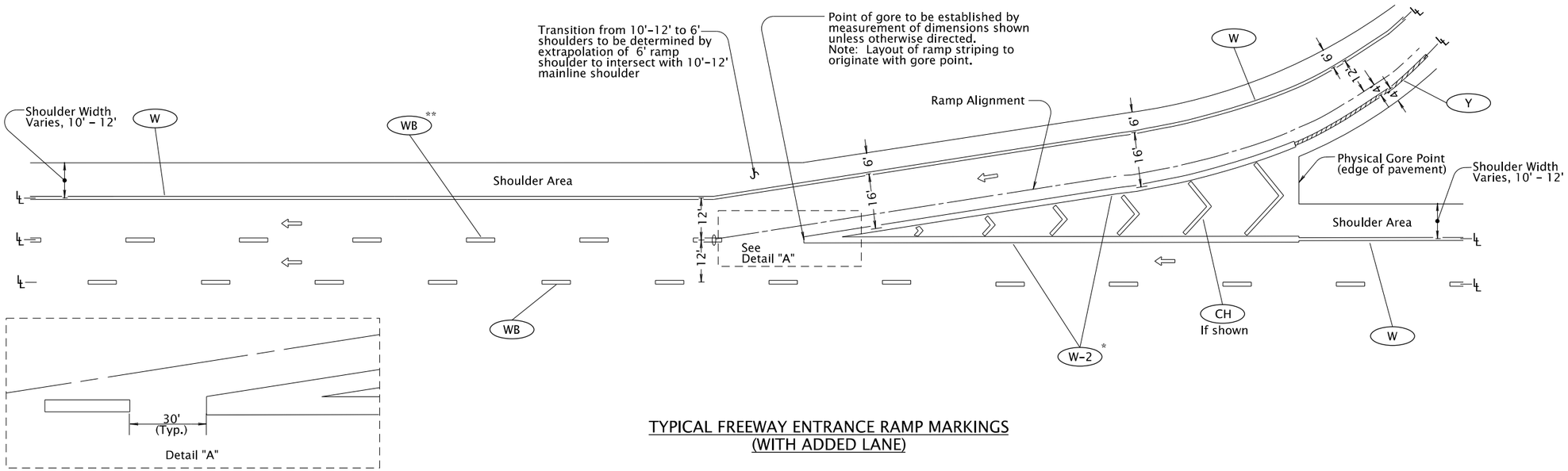

TYPICAL FREEWAY ENTRANCE RAMP MARKINGS
(WITH ADDED LANE)

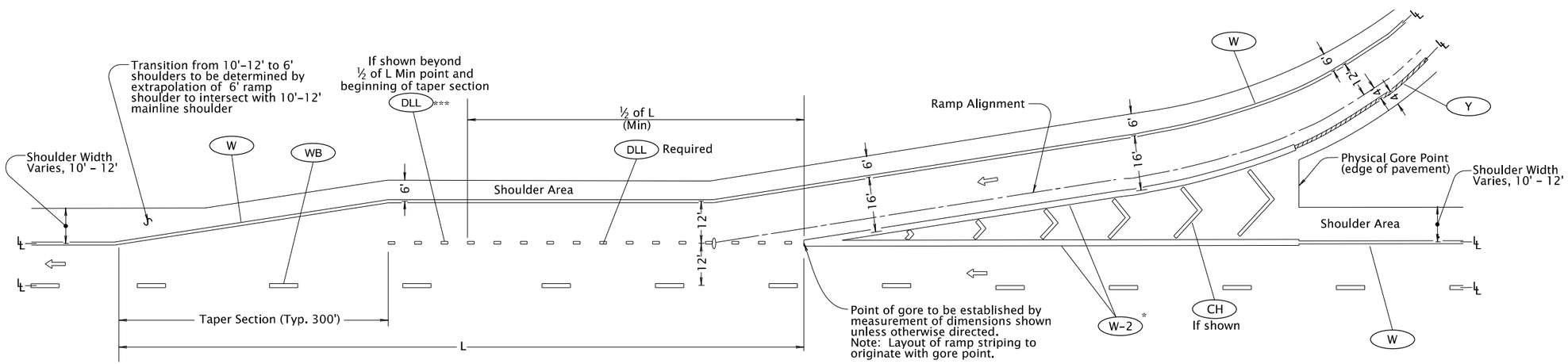

TYPICAL FREEWAY ENTRANCE RAMP MARKINGS
(WITH PARALLEL ACCELERATION LANE)

To be accompanied by Standard Dwg. Nos. TM500 thru TM504

General Notes:

Lane and shoulder widths shown are typical for new construction.
Dimensions may need to be adjusted to conform with other roadway designs.

* "W-2" from physical gore point to painted gore point

** 8" White Dotted Lane Line (DLL-2) shall be used instead of White Broken Line (WB) if the added lane becomes an auxiliary lane that is two miles or less in length

*** White Dotted Line (WD) may be shown instead of White Dotted Lane Line (DLL) between the required White Dotted Lane Line (DLL) and the beginning of the taper

LEGEND

Direction of Travel

Lane line dimensions are shown on the striping plans

CALC. BOOK NO. N/A

SDR DATE 07/01/2020

NOTE: All material and workmanship shall be in accordance with the current Oregon Standard Specifications.

The selection and use of this Standard Drawing, while designed in accordance with generally accepted engineering principles and practices, is the sole responsibility of the user and should not be used without consulting a Registered Professional Engineer.

OREGON STANDARD DRAWINGS

FREEWAY ENTRANCE RAMP PAVEMENT MARKINGS

2021

DATE	REVISION DESCRIPTION
07/2020	Extended accompanied by drawings to include TM504

TM547

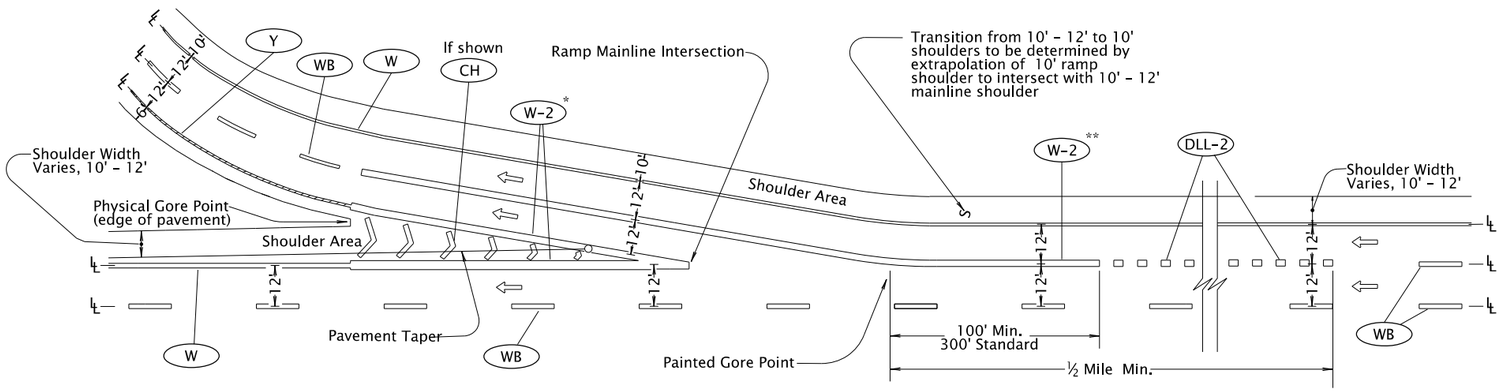

TYPICAL FREEWAY EXIT RAMP MARKINGS
(WITH TWO-LANE EXIT AND SINGLE LANE DROP)

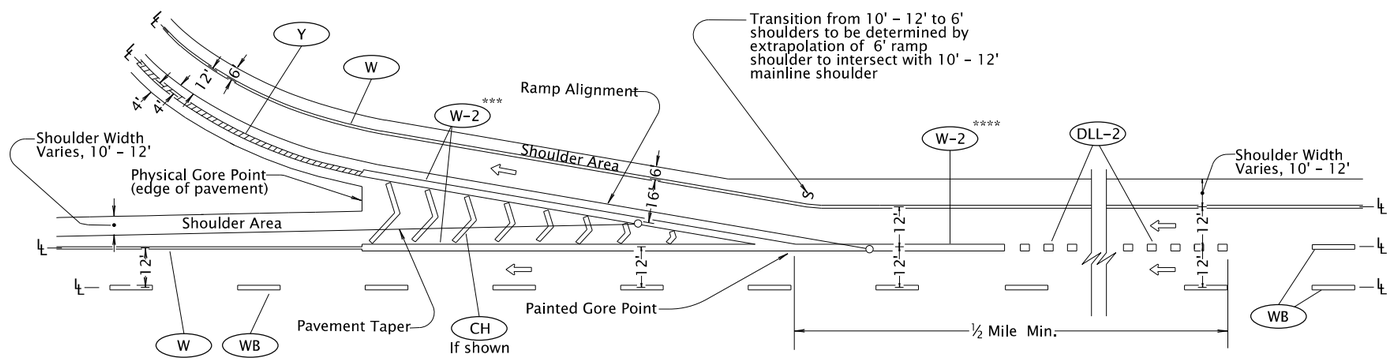

TYPICAL FREEWAY EXIT RAMP MARKINGS
(WITH SINGLE LANE DROP)

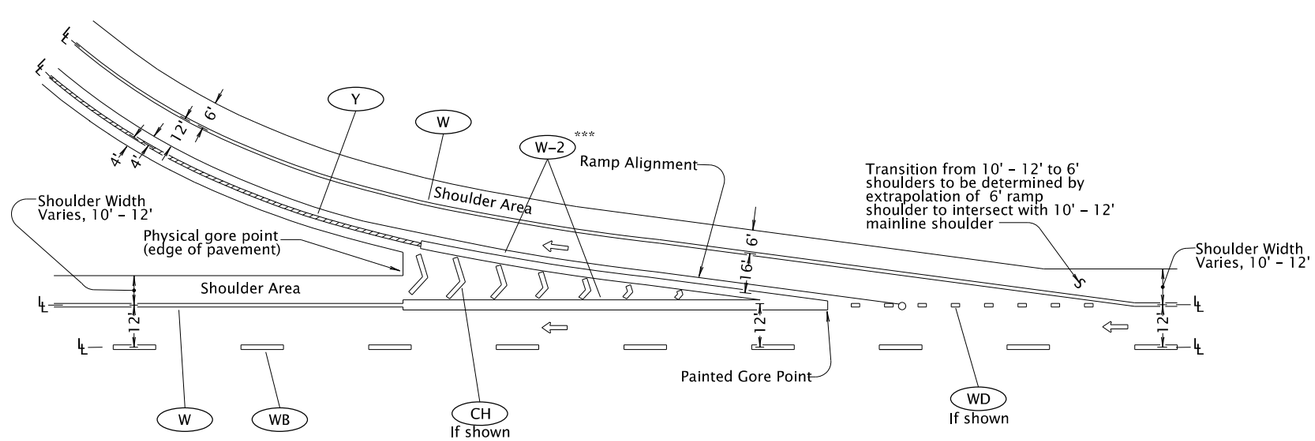

TYPICAL FREEWAY EXIT RAMP MARKINGS
(WITH TAPERED DECELERATION LANE)

General Notes:

Lane and shoulder widths shown are typical for new construction. Dimensions may need to be adjusted to conform with other roadway designs.

* "W-2" from physical gore point to ramp mainline intersection.

** "W-2" from physical gore point to 100' min to 300' standard upstream of painted gore point.

*** "W-2" from physical gore point to painted gore point.

**** "W-2" from painted gore point to 100' min to 300' standard upstream of painted gore point.

LEGEND

Direction of Travel

Lane line dimensions are shown on the striping plans

To be accompanied by Standard Dwg. Nos. TM500 thru TM504

CALC. BOOK NO. N/A

SDR DATE 07/01/2020

NOTE: All material and workmanship shall be in accordance with the current Oregon Standard Specifications.

The selection and use of this Standard Drawing, while designed in accordance with generally accepted engineering principles and practices, is the sole responsibility of the user and should not be used without consulting a Registered Professional Engineer.

OREGON STANDARD DRAWINGS

FREEWAY EXIT RAMP PAVEMENT MARKINGS

2021

DATE	REVISION DESCRIPTION
07/2020	Extended accompanied by drawings to include TM504

TM551

Effective Date: December 01, 2020 - May 31, 2021

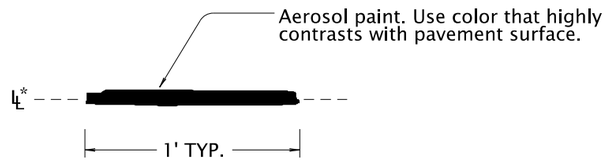

CONTROL POINT

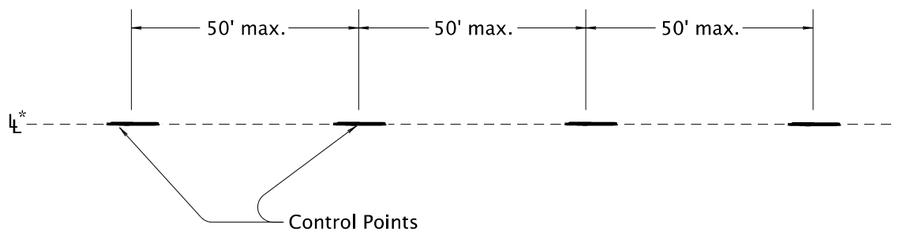

CONTROL POINT LAYOUT – TANGENT SECTIONS

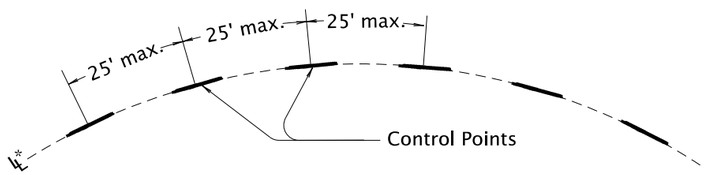

CONTROL POINT LAYOUT – CURVE SECTIONS

General note:

1.) Use control points to make continous narrow guideline as specified.

* Control points are placed along the lane line for all longitudinal lines except the following:

ND For center lines only	A control point layout 4" offset from the lane line is required for a ND line when used as a center line.

LEGEND

℄ — Lane line dimensions are shown on the striping plans.

To be accompanied by Standard Dwg. Nos. TM500 thru TM504

CALC. BOOK NO. N/A

SDR DATE 07/01/2020

NOTE: All material and workmanship shall be in accordance with the current Oregon Standard Specifications.

The selection and use of this Standard Drawing, while designed in accordance with generally accepted engineering principles and practices, is the sole responsibility of the user and should not be used without consulting a Registered Professional Engineer.

OREGON STANDARD DRAWINGS

ALIGNMENT LAYOUT: GENERAL

2021

DATE	REVISION DESCRIPTION
07/2020	*Extended accompanied by drawings to include TM504*

TM560

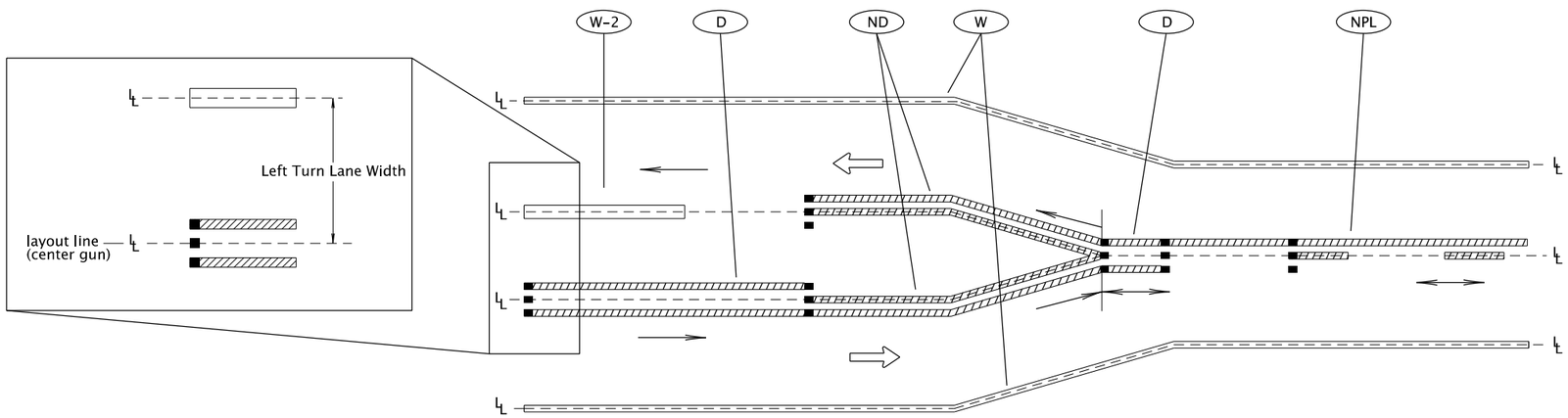

LEFT TURN LANE ALIGNMENT LAYOUT

General note:

1) Install control points for pavement marking alignment layout along the center gun location.
2) Increasing stationing from left to right

LEGEND

- Direction Of Travel and Thru Traffic Side.
- Lane line dimensions are shown on the striping plans.
- Direction of striping truck (may go either direction)
- Direction of striping truck (may go one direction only)
- Three gun installation system (center dot represents center gun)

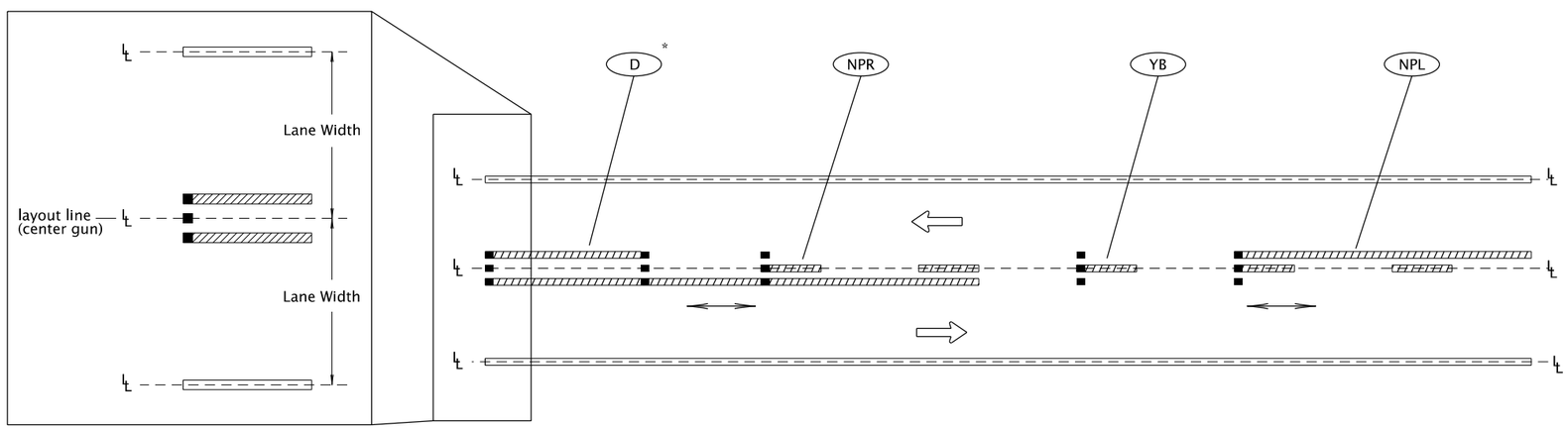

CENTERLINE ALIGNMENT LAYOUT

*When ND is used as centerline markings, a control point layout 4" offset from the lane line is required.

Line Types requiring control points to be 4" offset from lane line:

ND
For centerlines only

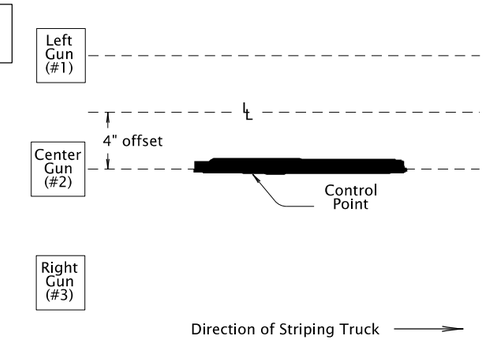

4" Offset of Lane Line and Center Gun

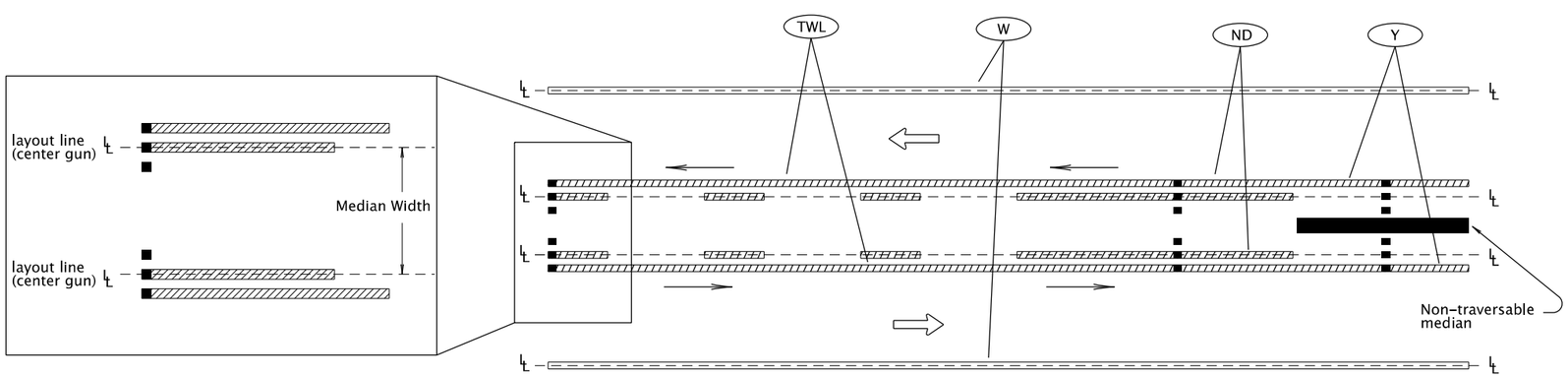

MEDIAN ALIGNMENT LAYOUT

To be accompanied by Standard Dwg. Nos. TM500 thru TM504

CALC. BOOK NO. N/A

SDR DATE 07/01/2020

NOTE: All material and workmanship shall be in accordance with the current Oregon Standard Specifications.

The selection and use of this Standard Drawing, while designed in accordance with generally accepted engineering principles and practices, is the sole responsibility of the user and should not be used without consulting a Registered Professional Engineer.

OREGON STANDARD DRAWINGS

ALIGNMENT LAYOUT: LEFT TURN LANE, CENTERLINE & MEDIANS

2021

DATE	REVISION DESCRIPTION
07/2020	Extended accompanied by drawings to include TM504

TM561

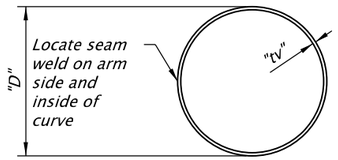

SECTION A–A
(TYPICAL POST SECTION)
No Scale

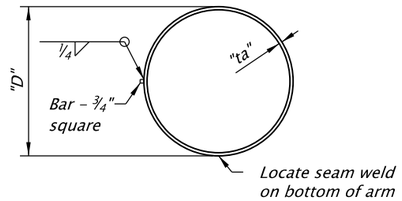

SECTION B–B
(TYPICAL ARM SECTION)
No Scale

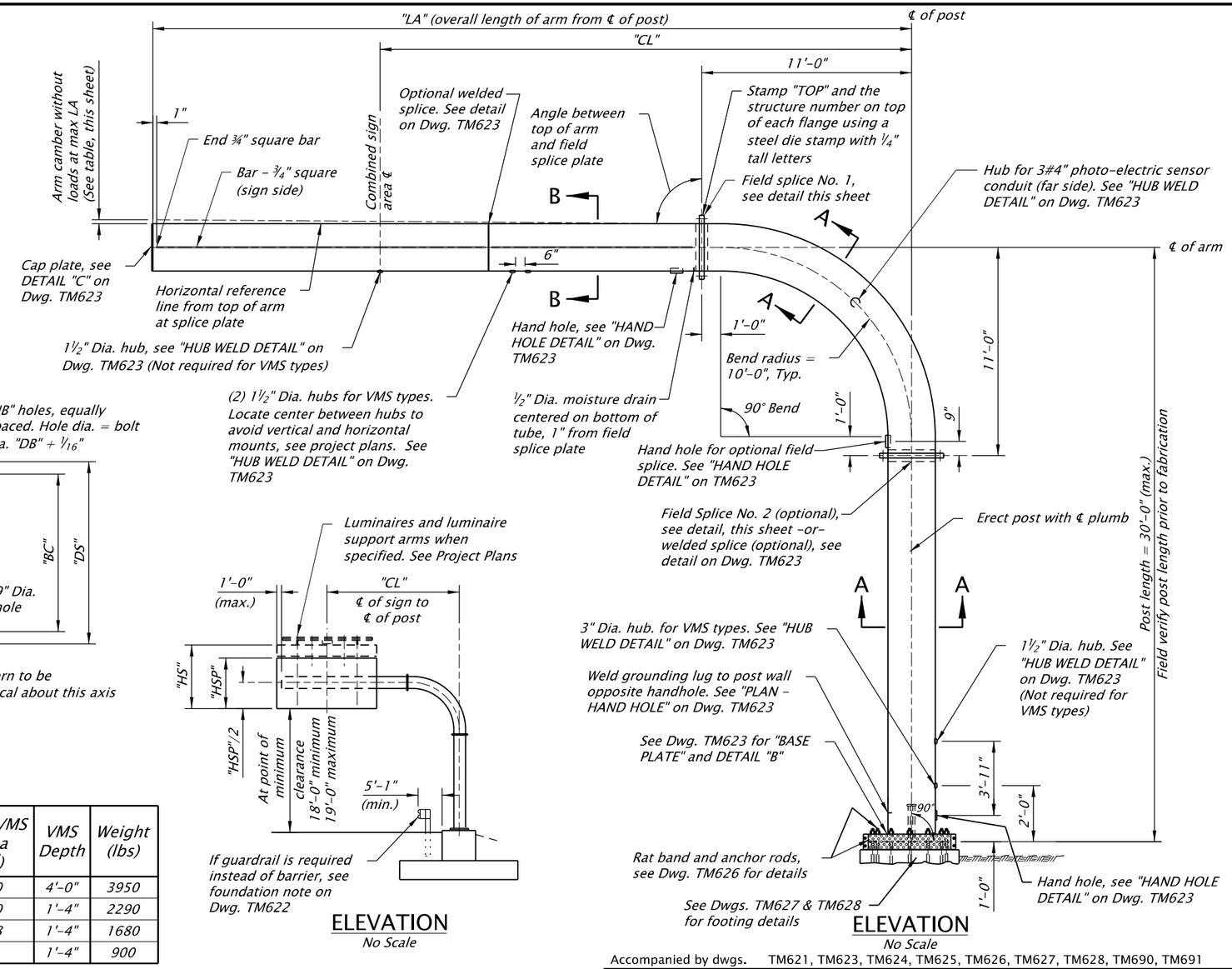

ELEVATION
No Scale

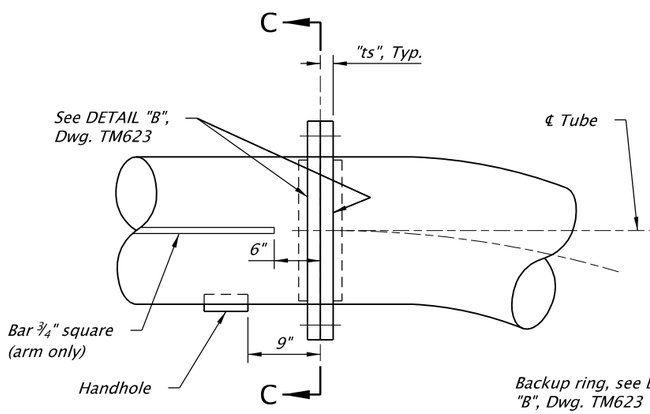

FIELD SPLICE NO. 1
(FIELD SPLICE NO. 2 SIMILAR)
No Scale

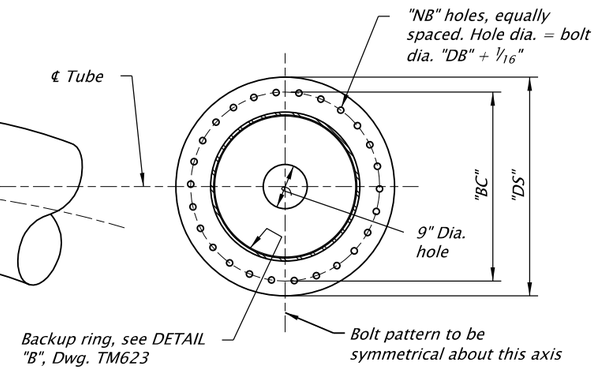

SECTION C–C
No Scale

ELEVATION
No Scale

See Dwgs. TM622 through TM628

Advisory Note: This standard applies only if total sign area is less than or equal to "maximum sign area", and actual arm length, measured from center of sign to centerline of post, is less than or equal to "CL" in the Table and if actual height of post is less than or equal to 30'-0". VMS signs may not exceed the dimensions and weights in the table.

VMS Type	Access	VMS Height (ft)	VMS Length (ft)	Max. VMS Area (ft²)	VMS Depth	Weight (lbs)
1W	Walk-In	8	30	240	4'-0"	3950
2F	Front	8	30	240	1'-4"	2290
3F	Front	8	21	168	1'-4"	1680
4F	Front	6	15	90	1'-4"	900

* Limits do not apply to VMS Signs

** "LA" is limited to 45 ft. for Design No. 4 when a walkway is used.

*** – Arm Camber for VMS types according to Project Plans

Structure Design No.	Max. "LA" (ft)	* Max. "CL"	* Max. Sign Area (ft²)	VMS Type	Arm and Post Dimensions			Field Splice No. 1					Field Splice No. 2 (Optional)					***Arm Camber without walkway	***Arm Camber with walkway
					"D"	"ta"	"tv"	"DB"	"NB"	"DS"	"BC"	"ts"	"DB"	"NB"	"DS"	"BC"	"ts"		
1	42	28'-6"	350	–	2'-6"	1/2"	5/8"	7/8"	26	3'-8"	3'-2"	2 3/4"	1"	24	3'-8"	3'-2"	3"	3 3/4"	4 1/4"
2	50	40'-0"	253	3F, 4F	2'-6"	1/2"	5/8"	7/8"	26	3'-8"	3'-2"	2 3/4"	1"	24	3'-8"	3'-2"	3"	6 1/4"	8 1/4"
3	40	30'-0"	253	–	2'-6"	3/8"	1/2"	7/8"	20	3'-8"	3'-2"	2 1/2"	7/8"	24	3'-8"	3'-2"	2 1/2"	3 1/2"	4 1/2"
4	50 **	42'-6"	153	4F	2'-6"	3/8"	1/2"	7/8"	20	3'-8"	3'-2"	2 1/2"	7/8"	24	3'-8"	3'-2"	2 1/2"	6"	8 1/2"
5	40	32'-6"	153	–	2'-6"	3/8"	1/2"	7/8"	20	3'-8"	3'-2"	2"	7/8"	24	3'-8"	3'-2"	2"	3 1/2"	4 1/2"
6	30	22'-6"	153	–	2'-0"	3/8"	1/2"	7/8"	18	3'-2"	2'-8"	2 1/2"	7/8"	18	3'-2"	2'-8"	2 1/2"	2 3/4"	3 1/4"
7	50	46'-6"	54	–	2'-0"	3/8"	3/8"	7/8"	16	3'-2"	2'-8"	2 1/2"	7/8"	16	3'-2"	2'-8"	2 1/2"	10 1/4"	–
8	30	26'-6"	54	–	1'-6"	3/8"	3/8"	7/8"	12	2'-8"	2'-2"	2 1/2"	7/8"	12	2'-8"	2'-2"	2 1/2"	4 3/4"	–
9	45	–	–	1W, 2F, 3F, 4F	2'-6"	1/2"	5/8"	7/8"	26	3'-8"	3'-2"	2 3/4"	1"	24	3'-8"	3'-2"	3"	–	8 1/2"

Accompanied by dwgs. TM621, TM623, TM624, TM625, TM626, TM627, TM628, TM690, TM691

CALC. BOOK NO. 6921-6930, 6974

SDR DATE 10-JUL-2020

The selection and use of this Standard Drawing, while designed in accordance with generally accepted engineering principles and practices, is the sole responsibility of the user and should not be used without consulting a Registered Professional Engineer.

NOTE: All material and workmanship shall be in accordance with the current Oregon Standard Specifications

OREGON STANDARD DRAWINGS

STD. MONOTUBE SIGN/VMS CANTILEVER GENERAL DESIGN CRITERIA

2021

DATE	REVISION DESCRIPTION
07/20	Hub location was at 2', added VMS camber asterisk, and added camber at max LA.

tm621.dgn 10-JUL-2020

TM621

Effective Date: December 1, 2020 – May 31, 2021

GENERAL NOTES:

Standard Monotube Cantilever Sign Support Structures are designed in accordance with AASHTO LRFD Specifications for Structural Supports for Highway Signs, Luminaires and Traffic Signals 1st edition, 2015 and interim revisions thru 2017.

Basic wind speed (3 second gust) used for Extreme I Limit State is 145 mph. G = 1.14, 1700 year recurrence interval, fatigue importance factor I_f = 1.0 and Exposure C were used for design.

The maximum design sign area for the Standard Monotube Cantilever Sign Support Structure is shown on Dwg. TM621. The design sign panel and mounting members weigh 5 pounds per square foot. The design luminaire including mounting channels weighs 20 pounds per linear foot. The design luminaire wind loading area including mounting channels is 1 square foot per linear foot, has rectangular flat side shapes, is as long as the design sign, and the resulting projected area is not part of the maximum sign area. The sign lengths for structure design 1 is 25 feet, for structure designs 2 and 3 are 22 feet, for structural designs 4 through 6 are 17 feet, and for structural designs 7 through 8 are 9 feet.

The allowable variation from field verified working drawing camber is -0% to +25%, post length is -0" to +3", and overall length "LA" is -1/8" to +1/8". The maximum offset of the arm 3/4" square bar from straight shall be +1/8" to -1/8" on each member. These lengths shall be measured prior to galvanizing using a steel tape or other approved measuring method.

The VMS design loads include 100 pounds per linear foot applied from center of vertical post to end of arm for the weight of a walkway along with a 500 pound concentrated live load. The design walkway wind loading area is 1.0 square feet per linear foot, extends from center of vertical post to end of arm, and the resulting projected area is not part of the maximum sign area. VMS dimensions and design loads are shown on TM621.

Snow and ice loads are not included in the design loads. The Engineer shall evaluate the design in regions of heavy snow or ice accumulations.

The signs are to be positioned horizontally as shown on Project Data for Std. Monotube Cantilever Sign Support Sheet and vertically as shown on Dwg. TM621.

Material for circular tube sections shall be ASTM A53 Grade B; ASTM A500 Grade B or C; ASTM A501 Grade A or B; or API 5L PSL2 Grade B, X42, X42M, X52, and X52M. All other structural steel shall conform to ASTM A572 Grade 50, or A992, unless noted otherwise.

Bend tube using induction heating methods in accordance with TPA-IBS-98, "Recommended Standards for Induction Bending of Pipe and Tube."

Notch toughness of all structural steel members and plates greater than 1/2" thick shall conform to Zone 2 fracture critical requirements of ASTM A709.

High strength bolts shall conform to ASTM A325, Type 1. Nuts for high strength bolts shall be heavy hex and conform to ASTM A563 Grade DH, with supplementary requirements "S1" and "S2". Hardened steel washers shall conform to ASTM F436, Type 1. Use washers under turning element in tightening unless otherwise specified.

Bolts connecting galvanized steel members to aluminum members shall meet the requirements of ASTM A193 Class 2 Grade B8M. Nuts used with A193 bolts shall be heavy hex and shall meet the requirements of ASTM A194 Grade 8M with supplementary requirement "S1". Use a stainless steel flat washer and double nut at each bolt.

Final elevations shall be field verified prior to fabrication of the post members and footing reinforcement.

All fasteners, except mechanically galvanized direct tension indicator (DTI) washers, shall be hot-dip galvanized (except stainless steel and non-ferrous fasteners). All structural steel shall be hot-dip galvanized after fabrication, unless noted otherwise.

The silicon content of the base metal shall be in the ranges of 0.0% to 0.06% or 0.13% to 0.25% for all hot-dip galvanized steel, unless noted otherwise.

All H.S. bolts shall be considered slip critical and tightened according to Section 00930.40(d)(2)a, unless noted otherwise. Design slip resistance for bolts shall conform to the Bolt Specifications for Class C slip coefficient = 0.33.

This Standard Monotube Cantilever Sign Support has been designed for the stated loading only. No additional signs or additional loadings are permitted. Other uses and loadings shall be considered non-standard, and are outside the scope of this design.

Splices in posts or arms and welds connecting posts or arms to base connection plates shall be full penetration welds as shown on Dwg. TM623.

Fabrication drawings shall show the weight of all parts.

Verify that top of pedestal is level and at correct elevation, prior to post installation.

Install sign mounts and sign on fully erected structure. Do not install sign until after support structure erection and bolt tightening is 100% complete.

A preconstruction meeting is recommended to make sure the contractor understands ODOT requirements and that ODOT understands the contractor's plan.

Use self locking nuts on non-high strength (H.S.) bolts, unless otherwise shown or specified.

See Dwg. TM623 for typical high strength bolt connection.

If a 20 minute rolling traffic stop is used to install the overhead sign support arm, the rolling stop shall meet the following requirements:

- *a) Verify (prior to arm lift) adequate crane capacity and boom length to perform complete installation from side of road.*
- *b) Set crane on side of road and do not re-set crane during lift.*
- *c) Verify (prior to lift) that lifting equipment and lifting points meet requirements of plans.*
- *d) Verify (prior to lift) that base plate is level and at the correct elevation.*
- *e) Rig lift before beginning rolling stop.*
- *f) Make sure all required tools and hardware are on site.*
- *g) Do not resume traffic until all arm to post connection bolts are at least snug tight.*
- *h) Support arm with crane until arm connection bolt tightening is 100% complete.*
- *i) Another rolling stop will be required to install the sign onto the arm.*
- *j) Rolling stops shall be at night and shall conform to the Special Provisions.*
- *k) Follow all required safety procedures.*

FOUNDATION NOTES:

Foundation type shall be as shown on Project Plans. Spread footing details are shown on Dwg. TM627 and drilled shaft details are shown on Dwg. TM628.

Provide shoring for the footing if required. Installation of temporary guardrail or barrier should precede any other work involving the construction of the footing.

Top surface of concrete pedestal (including area under base plate and around anchor bolts) shall be floated and troweled to a flat and level surface. This surface shall not vary more than 1/8" from a horizontal plane. Provide a 3/4" chamfer on all exposed edges of the pedestal.

Concrete for spread footings shall be Class 3600 - 3/4" Commercial Grade Concrete classified as a structural item. Concrete for drilled shafts shall be as noted on Dwg. TM628.

Place bars 2" clear of the nearest face of concrete, unless shown otherwise.

Concrete shall be placed using a tremie when free fall exceeds 4'-0". Cold joints shall be cause for rejection of the foundation, except between footing and pedestal and top of drilled shaft.

All reinforcing steel shall conform to ASTM A706 or A615 Gr. 60, unless shown otherwise.

Anchor rods shall conform to ASTM F1554, Gr. 55, with supplementary requirements "S2" that includes grade and manufacturer's identification and "S4". Anchor rod washers shall conform to ASTM F436. Anchor rod nuts shall conform to ASTM A563 Grade DH with supplementary requirements "S1" and "S2".

Anchor rod template, temporary support members, and anchor plate shall conform to ASTM A36.

Anchor rods shall be hot-dip galvanized full length.

Provide 1 -2" dia. rigid electrical conduit as shown on Dwgs. TM627 & TM628 and as directed. Extend sign support end of conduit to the center of the lower hand hole. If luminaires are not required, extend the other end of the conduit into the nearest illumination circuit junction box and identify conduit by attaching a tag which says "future sign lighting". Install "pull string" in conduit for future use. Install conduit cap on each end. When luminaires are required, extend the sign support end of conduit per Project Plans.

The elevation and location of anchor rods are critical. Use survey techniques to verify the elevation, location, and orientation of anchor bolt groups prior to placement of foundation concrete.

Where the footing of a Cantilever Monotube Sign Support interferes with guard rail posts, the depth of footing may be increased to the maximum shown on Dwg. TM627, or concrete barrier may be used instead of guard rail, or guard rail posts may be attached to footing in accordance with Dwg. BR266. All buried steel shall be coated for immersion exposure with an approved product from the qualified products for structural coatings (http://www.odot.state.or.us/tsconstruction/). Prepare and coat surfaces according to Section 00594 of Oregon Std. Specifications for Construction.

CONSTRUCTION PROCEDURE AND SEQUENCE:

1. *Construct foundation according to plans. Verify elevation, location and orientation of anchor bolts. Steel template, shown on Dwg. TM626, shall be used to accurately locate and hold the anchor rods plumb and in proper alignment. This template shall be in place during concrete placement and shall remain in place for a minimum of 24 hours after the concrete placement has been completed. Out of position anchor rods and anchor rods greater than 1:40 out of plumb are cause for rejection of the foundation. Bending of anchor rods to straighten or move them into position, or alterations of the base plate shall not be permitted and are cause for rejection of the foundation and/or post weldment.*
2. *Pedestal pour may begin after spread footing concrete has satisfied Section 00540.52. The post erection may begin after concrete has satisfied Section 00540.52.*
3. *Install bearing nuts on anchor rods. Level the bearing nuts. Install hardened flat washers above bearing nuts.*
4. *Use crane to lift post onto anchor rods. Maintain crane connection as a safety measure until post installation is complete. No grout shall be used under the base plate. Install hardened flat washers above base plate.*
5. *Generously apply an approved lubricant for galvanized fasteners from the QPL to the top nut bearing surface and internal threads, and install nut on anchor rods to snug tight condition. Snug tight is defined as the condition when all plies are in firm contact and can usually be obtained by the full effort of a worker on a 12 inch long wrench or a few impacts of an impact wrench. Several passes may be required to obtain uniform tightness.*
6. *Tighten bearing nuts upward against base plate in a similar manner, to assure a uniform snug tight condition.*
7. *Mark position of each anchor rod and top nut with a felt tip pen so subsequent nut rotation can be verified. Rotate all top nuts an additional 1/6 turn in two passes (1/12 turn per pass).*
8. *Lift the arm into position using a crane. Lubricate arm connection bolts with an approved lubricant for galvanized fasteners from the QPL. Maintain crane support during tightening.*
9. *Evenly tighten arm connection bolts to a snug tight condition, and then fully tension arm connection bolts according to Section 00930.40(d)(2)a.*

LUMINAIRE NOTES:

Hubs, handholes, grounding terminals, hook and foundation conduit shall always be installed for possible future use. Luminaires, luminaire support arms and luminaire support channels noted on Dwgs. TM624 & TM625 should only be provided when luminaires are required (See Project Plans).

Conduit diameters shown on plans are nominal or trade sizes.

WALKWAY NOTES:

Grating shall be welded steel grating with 1 1/2" x 1/8" bearing bars spaced at 1 3/16" centers and 1/4" x 1/4" nominal square cross bars (or equivalent) spaced at 4" centers. Steel plates and bars including grating elements shall conform to ASTM A36 or approved equal.

Rail members and post brackets shall be structural steel tubing conforming to ASTM Specification A500, Grade A or B.

Grating may be spliced at an interior support by welding 1/8" x 1 1/2" bars to ends of bearing bars across full width of grating and bolting bars together with 1/4" dia. bolts at 12 inch maximum centers.

Top of walkway grating shall not be more than 6 inches below the threshold into the VMS cabinet.

Walkway contractor to verify prior to fabrication that walkway, grating and rails do not interfere with VMS door or VMS housing. No gaps greater than 1 inch between walkway rails, grating and toe board, and VMS housing are allowed. Walkways shall be installed on the structure by the manufacturer to verify physical fit and approved before galvanizing.

All bolts, including U-bolts, shall conform to ASTM Specification A307, unless otherwise noted.

Accompanied by dwgs. TM621, TM623, TM624, TM625, TM626, TM627, TM628, TM690, TM691

CALC. BOOK NO. 6921-6930, 6974

SDR DATE 10-JUL-2020

NOTE: All material and workmanship shall be in accordance with the current Oregon Standard Specifications

The selection and use of this Standard Drawing, while designed in accordance with generally accepted engineering principles and practices, is the sole responsibility of the user and should not be used without consulting a Registered Professional Engineer.

OREGON STANDARD DRAWINGS

STD. MONOTUBE SIGN/VMS CANTILEVER NOTES

2021

DATE	REVISION DESCRIPTION
07/20	Added 3/4" bar tolerance, walkway fit-up, X42M, and X52M.

tm622.dgn 10-JUL-2020

TM622

Effective Date: December 1, 2020 – May 31, 2021

SPREAD FOOTING DIMENSIONS AND REINFORCING									REACTIONS AT BASE PLATE (FACTORED)					
Monotube Cantilever Design No.	VMS/Sign Monotube Bridge Design No.	Footing		Pedestal	Reinforcing Steel				Force in vertical axis (lb)	Moment about axis perp. to sign (ft-lb)	Moment about axis parallel to sign (ft-lb)	Moment about vertical axis (ft-lb)	Shear normal to signs (lb)	Shear parallel to signs (lb)
		Length	Width	"D"	"a"	"b"	"c"	"d"						
1	-	27'-0"	13'-6"	5'-0"	18 - #7	26 - #5	18 - #6	26 - #5	22,600	250,000	800,000	672,000	26,200	0
2	-	28'-0"	13'-6"	5'-0"	18 - #7	26 - #5	18 - #6	26 - #5	28,100	469,700	628,000	707,000	20,000	0
3	-	25'-0"	12'-6"	5'-0"	18 - #6	24 - #5	18 - #6	24 - #5	18,400	196,000	590,000	517,000	19,600	0
4	-	25'-0"	12'-6"	5'-0"	16 - #6	24 - #5	16 - #6	24 - #5	21,800	363,000	442,000	496,000	15,400	0
5	-	23'-6"	11'-6"	5'-0"	16 - #6	22 - #5	16 - #6	22 - #5	16,900	173,800	395,000	357,000	13,400	0
6	-	21'-0"	10'-6"	4'-6"	14 - #5	20 - #5	14 - #5	20 - #5	12,800	100,000	367,000	240,000	12,300	0
7	-	20'-0"	10'-6"	4'-6"	14 - #5	20 - #5	14 - #5	20 - #5	13,000	179,000	200,000	222,000	7,200	0
8	-	16'-0"	9'-0"	4'-6"	10 - #5	16 - #5	10 - #5	16 - #5	7,800	65,000	157,000	110,000	5,600	0
9	-	28'-0"	14'-0"	5'-0"	18 - #7	26 - #5	18 - #6	26 - #5	26,900	415,800	780,000	745,000	26,500	0
-	1	28'-0"	16'-0"	5'-0"	20 - #7	28 - #5	20 - #7	28 - #5	36,800	250,800	919,000	396,000	31,000	26,400
-	2	27'-0"	13'-6"	5'-0"	18 - #7	26 - #5	18 - #6	26 - #5	28,500	159,500	737,600	252,000	25,500	16,300
-	3	24'-0"	12'-6"	5'-0"	16 - #6	24 - #5	16 - #6	24 - #5	23,200	96,800	584,300	128,700	20,600	9,900

Advisory Note:
The Standard reactions provided in the table are located at the base of the post and are the total reactions to the foundation due to Extreme I - Case 1 Loading (wind normal to sign). They include the loading from the maximum sign area listed on Dwg. TM622 or Dwg. TM693 or the maximum VMS loadings for the types listed, whichever produces the greatest reactions. Strength I and Extreme I Loadings are summarized in the calculation book.

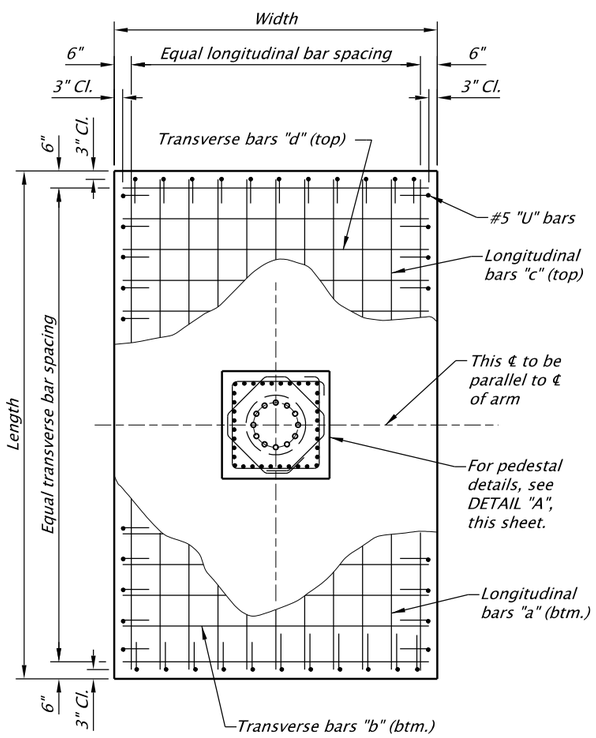

PLAN
No Scale

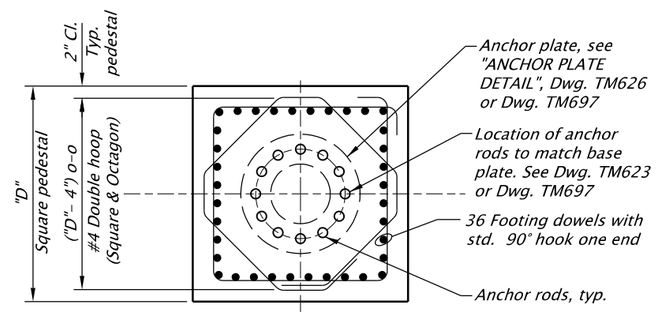

DETAIL "A"
No Scale

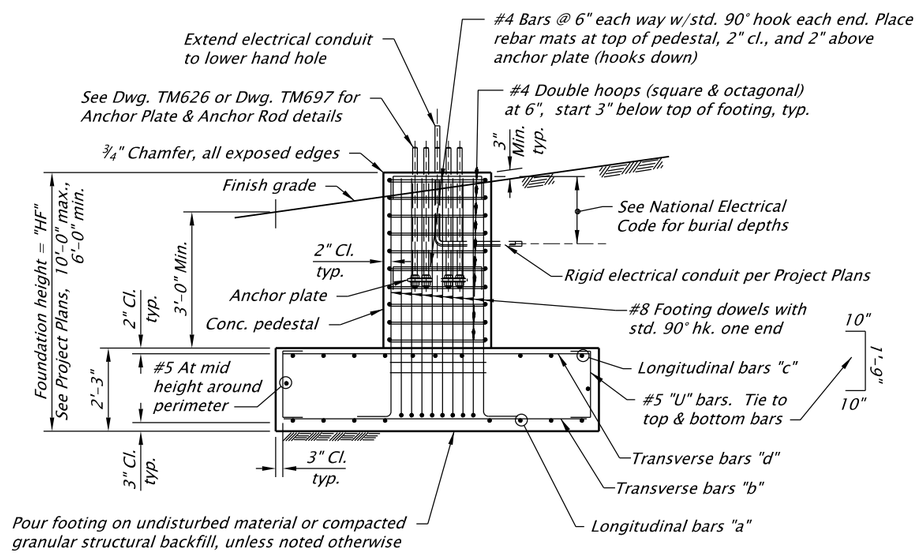

ELEVATION - SPREAD FOOTING
No Scale

The Standard Monotube Spread Footing drawing contains standardized designs based on assumed soil conditions. The assumed soil conditions will be verified by the Engineer of Record before referencing Dwg. TM627 on the Project Plans. Verification of assumed soil conditions will be based on a site-specific geotechnical study. The assumed bearing resistance is based on the methodology described in the references listed below. The standard spread footing designs include consideration of two conditions as follows:

Non-buoyant conditions for stability calculations (compacted soil density of soil over footing = 120 lb/ft^3 , concrete density = 150 lb/ft^3) with resistance factor = 0.45, nominal bearing resistance = 3,000 psf and factored bearing resistance of 1,350 psf.

Buoyant conditions for stability calculations (compacted soil density of soil over footing = 58 lb/ft^3 , concrete density = 88 lb/ft^3) with resistance factor = 0.45, nominal bearing resistance = 3,000 psf and factored bearing resistance of 1,350 psf.

Reference:

1. AASHTO LRFD Bridge Design Specifications, 7th Edition with Interims thru 2016, Section 10.6.3.
2. AASHTO Standard Specifications for Highway Bridges, 17th Edition.

The following uncoated splice lengths are for Class 3600 concrete and shall be used unless shown otherwise:

Bar size	#4	#5	#6	#7	#8	#9
Splice length (in.) (top bars)	2'-2"	2'-9"	3'-3"	3'-9"	4'-4"	4'-10"
Splice length (in.) (all others)	1'-8"	2'-1"	2'-6"	2-11"	3'-4"	3'-9"

Splice reinforcing steel at alternate bars, staggered at least one splice length or as far as possible, unless shown otherwise.

Accompanied by dwgs. TM621, TM622, TM623, TM624, TM625, TM626, TM628

CALC. BOOK NO. 6921-6930, 6969-6972, 6974

SDR DATE 10-JUL-2020

NOTE: All material and workmanship shall be in accordance with the current Oregon Standard Specifications

The selection and use of this Standard Drawing, while designed in accordance with generally accepted engineering principles and practices, is the sole responsibility of the user and should not be used without consulting a Registered Professional Engineer.

OREGON STANDARD DRAWINGS

STD. MONOTUBE SIGN/VMS SUPPORT SPREAD FOOTING FOUNDATION DETAILS

2021

DATE	REVISION DESCRIPTION
07/20	Removed spread footing and added monotube to the design number columns.

tm627.dgn 10-JUL-2020

TM627

Effective Date: December 1, 2020 - May 31, 2021

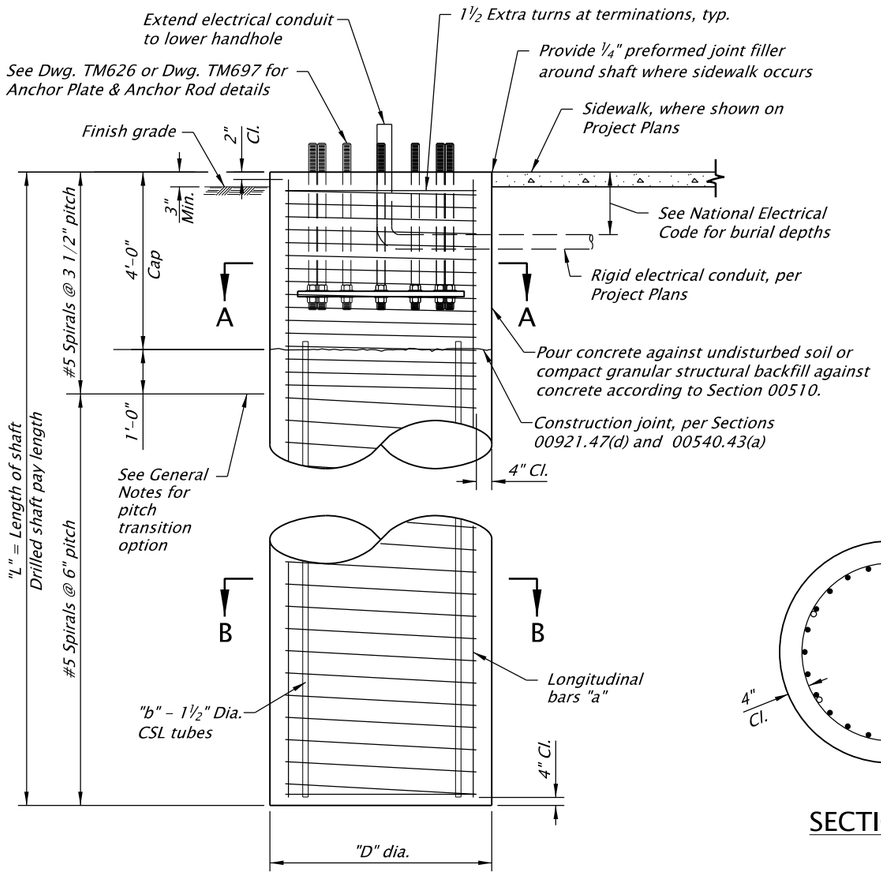

ELEVATION

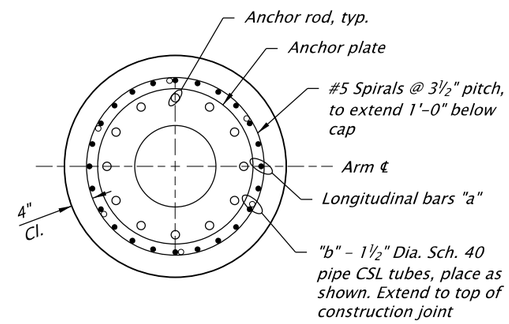

SECTION A-A

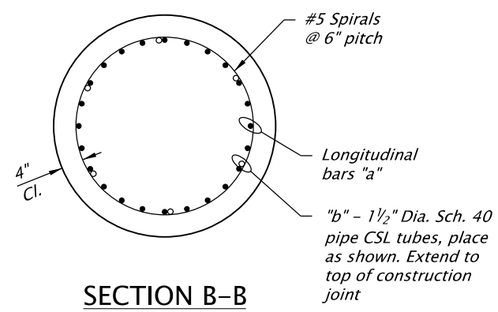

SECTION B-B

DRILLED SHAFT DETAILS

No Scale

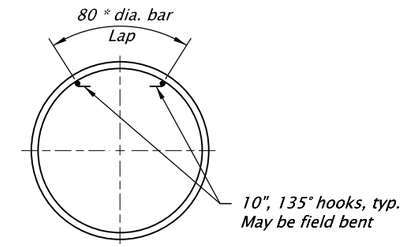

LAPPED SPLICE

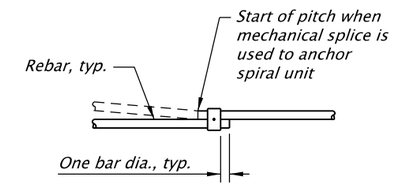

MECHANICAL SPLICE

(Not allowed for ASTM A82 spirals)

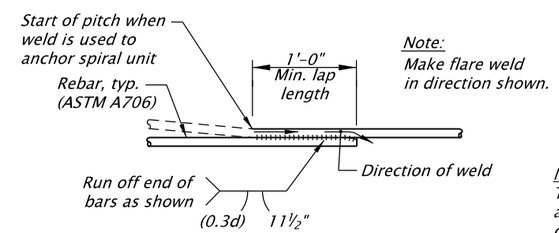

WELDED SPLICE

SPIRAL SPLICE DETAIL

No Scale

GENERAL NOTES:

Use ASTM A706 for all welded splices, except ASTM A615 Grade 60, ASTM A82 or ASTM A496 may be used if copies of the chemical composition analysis are submitted and approved as weldable by the Engineer.

Anchor spirals at each end or discontinuity with one extra turn and a splice to itself as shown. Where permitted on plans, provide closed hoops conforming to the requirements of this detail.

Securely tie CSL tubes to reinforcement.

Use temporary casing as required. Permanent casing not permitted.

Cap concrete shall be Class 3600 - ¾" commercial grade, classified as a structural item. Remainder of shaft shall be Class 4000 - ⅜" without air entrainment and with 8" ± ½" slump.

Contractor shall field verify elevations prior to installation.

The transition between the 3 1/2" to 6" pitches may use two separate spiral cages with 1½ horizontal turns at the start and end of each cage and the lapped splice details between the cages.

Note:
The base plate reactions shown in the table are worst case Extreme I and Service I loads. Engineer of Record to specify shaft depth and confirm shaft design for local soil conditions based on a site specific geotechnical study and loads shown in table. If shaft size or reinforcement shown in table are not adequate for local soil conditions, Engineer of Record must adjust the shaft design accordingly.

The shafts designs shown in table were based on an analysis to encompass worst case soil conditions by applying Extreme I loads to the top of shaft and analyzing below ground shaft forces using Brom's method for two different soil types. The assumed cohesive soil minimum undrained shear strength, c, is 600 psf. The assumed non-cohesive soil friction angle is 25 degrees and bulk weight is 100 pcf.

Monotube Cantilever Design No.	Monotube VMS/Sign Bridge Design No.	Reinf. Steel "a"	Shaft Dia. "D"	No. of CSL Tubes "b"	Reaction At Base Plate (Factored) Axial (lb)	Shear (lb)	Moment (ft-lb)	Torsion (ft-lb)	Reaction At Base Plate (Service) Axial (lb)	Shear (lb)	Moment (ft-lb)	Torsion (ft-lb)
1	-	30 - #9	5'-0"	6	22,600	26,200	839,000	672,000	20,500	10,100	384,000	259,000
2	-	30 - #9	5'-0"	6	28,100	20,000	784,200	707,000	25,500	8,500	501,200	279,000
3	-	30 - #9	5'-0"	6	18,400	19,600	622,000	517,000	16,700	7,700	293,000	204,000
4	-	30 - #9	5'-0"	6	21,800	13,200	500,800	430,000	19,800	5,200	339,200	169,000
5	-	30 - #9	5'-0"	6	16,900	13,400	431,600	357,000	15,300	5,300	222,000	140,000
6	-	24 - #9	4'-6"	5	12,800	12,300	381,000	240,000	11,600	4,900	171,000	94,000
7	-	24 - #9	4'-6"	5	13,000	7,200	268,000	222,000	11,800	2,800	181,000	87,000
8	-	20 - #9	4'-0"	5	7,800	5,600	170,000	110,000	7,100	2,200	86,000	44,000
9	-	30 - #9	5'-0"	6	26,900	26,500	884,000	745,000	24,400	10,500	498,000	294,000
-	1	30 - #9	5'-0"	6	36,800	40,700	952,600	396,000	33,400	27,000	449,600	156,000
-	2	30 - #9	5'-0"	6	28,500	30,300	754,700	252,000	25,900	17,900	343,500	99,500
-	3	30 - #9	5'-0"	6	23,200	22,900	592,300	128,700	21,100	12,100	261,700	51,000

Accompanied by dwgs. TM621, TM622, TM623, TM624, TM625, TM626, TM627

CALC. BOOK NO. 6921-6930, 6969-6972 6974

SDR DATE 10-JUL-2020

NOTE: All material and workmanship shall be in accordance with the current Oregon Standard Specifications

The selection and use of this Standard Drawing, while designed in accordance with generally accepted engineering principles and practices, is the sole responsibility of the user and should not be used without consulting a Registered Professional Engineer.

OREGON STANDARD DRAWINGS

STD. MONOTUBE SIGN/VMS SUPPORT DRILLED SHAFT DETAILS

2021

DATE	REVISION DESCRIPTION
07/20	Added "Monotube" to the design number columns.

tm628.dgn 10-JUL-2020

TM628

Effective Date: December 1, 2020 – May 31, 2021

STANDARD SIGNAL ARM LOADS							
Signal Pole Type	Signal Arm Length	Signals			Sign		DS Max. for S2
		4L Qty.	2 Qty.	5 * Qty.	S1 Qty.	S2 * Qty.	
SM1 or SM1L	15'	1	0	1	2	0	N/A
SM2 or SM2L	20'	1	1	1	3	0	N/A
	25'	1	1	1	3	0	
SM3 or SM3L	30'	1	1	1	3	1	9'-1"
	35'	1	1	1	3	1	
SM4 or SM4L	40'	1	2	1	4	1	11'-1"
	45'	1	2	1	4	1	
SM5 or SM5L	50'	1	2	1	4	1	21'-1"
	55'	1	2	1	4	1	

* - Load location is the closest sign or signal of that type to the vertical post.

SIGNAL ARMS DEFLECTION		
Signal Arm Length "SA"	Allowable Dead Load Deflection	Allowable Total Load Deflection
15' or less	0.01"SA"	0.05"SA"
20'	2½"	12"
25'	3½"	15"
30'	5"	21"
35'	7"	29"
40'	9½"	38"
45'	1'-½"	48"
50'	1'-4"	60"
55'	1'-8"	74"

VERTICAL POST LOADS								
Description	Maximum Centerline Elevation	Height (Each)	Width (Each)	Depth (Each)	Area Front (sq. ft)	Area Side (sq. ft)	Area Bottom (sq. ft)	Weight 0" Ice (lbs)
2-Ped. Push Buttons	3'-6"	7¾"	5"	3⅜"	0.27	0.18	0.12	3.0
Controller Cabinet	5'-9"	46"	24"	22"	7.67	7.03	3.67	300
2-Pedestrian Signals	8'-3½"	18¾"	19"	19"	2.47	2.47	2.51	25.0
Terminal Cabinet	10'-9"	18⅛"	6¾"	8⅞"	0.85	1.05	0.39	25.0
Guide Sign (S3)	15'-0"	72"	120"	8⅜"	60.0	1.00	1.67	395
Photoelectric Cell	38'-4"	2¼"	3¼"	3¼"	0.05	0.05	0.07	5.0

1. Physical fit of the loading must be verified.

1. Camera mounted on 6 ft arm placed at any location on signal arm.
2. Fire Pre-Emption may be placed at any location along the mast arm.
3. Loads stated in the table produce reactions as shown in tables on TM651. Modifications to the loading shown require analysis to verify the structural adequacy of the pole.
4. Physical fit of the loading must be verified.

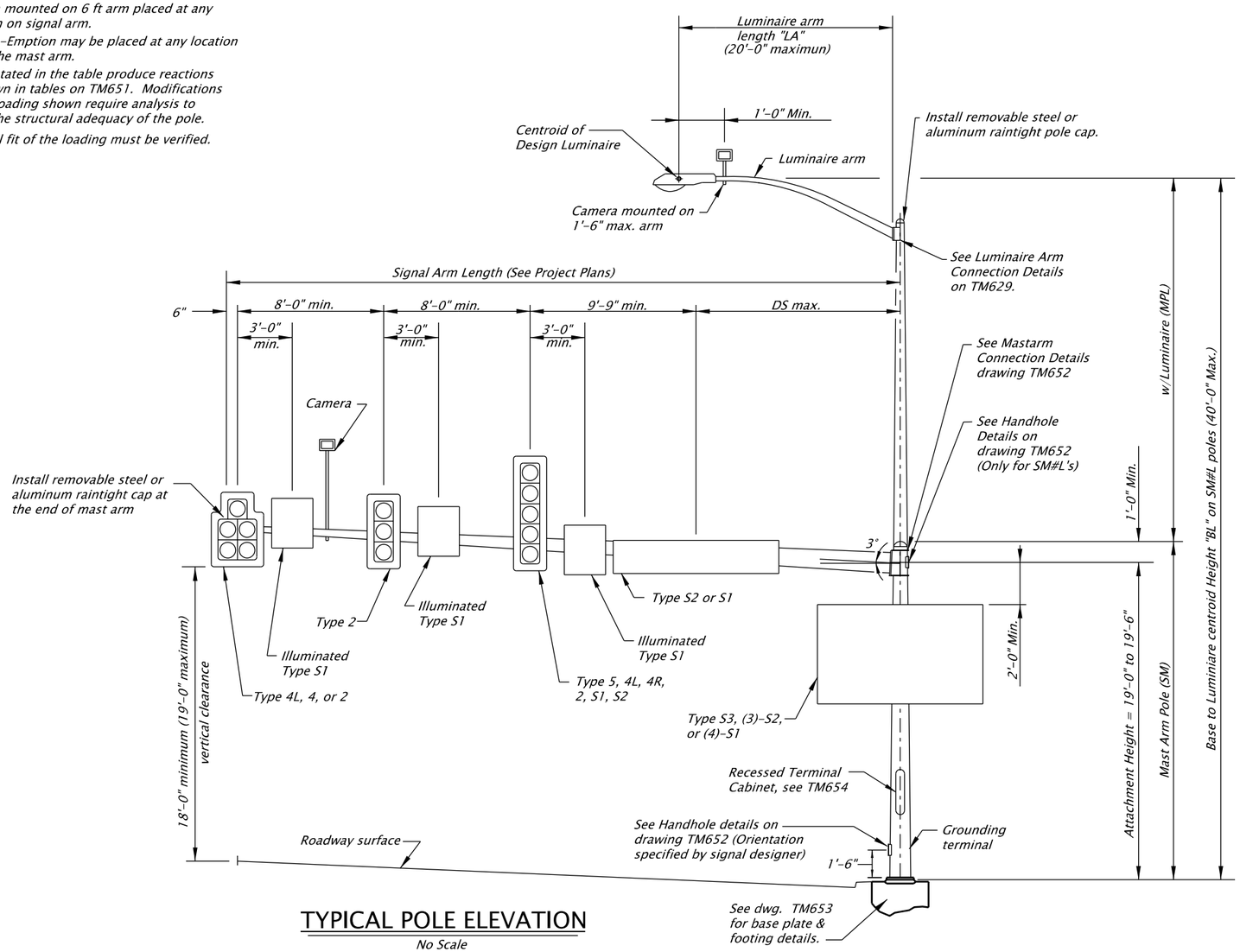

TYPICAL POLE ELEVATION

No Scale

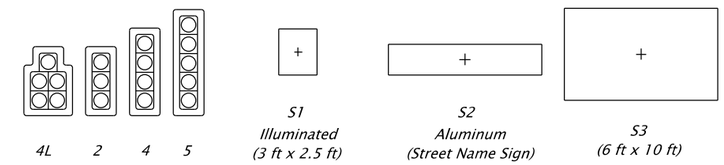

SIGNAL POLE APPURTENANCE TYPES

APPURTENANCE LOADS				
Type	Area Front (sq. ft)	Area Side (sq. ft)	Area Bottom (sq. ft)	Weight 0" Ice (lbs)
4L	12.4	6.61	3.64	145
2	8.67	6.61	1.95	85.0
4	11.0	8.49	1.95	97.0
5	13.3	10.36	1.95	142
S1	7.50	2.38	1.72	71.0
S2	21.0	0.00	1.67	105

Accompanied by dwgs. TM651, TM652, TM653, TM654, TM679

CALC. BOOK NO. 5301

SDR DATE 10-JUL-2020

NOTE: All material and workmanship shall be in accordance with the current Oregon Standard Specifications

The selection and use of this Standard Drawing, while designed in accordance with generally accepted engineering principles and practices, is the sole responsibility of the user and should not be used without consulting a Registered Professional Engineer.

OREGON STANDARD DRAWINGS

TRAFFIC SIGNAL SUPPORT GENERAL DETAILS & DESIGN CRITERIA

2021

DATE	REVISION DESCRIPTION
07/20	Replaced hub with recessed terminal cabinet and added accompanied by dwg TM654.

tm650.dgn 10-JUL-2020

TM650

Effective Date: December 1, 2020 – May 31, 2021

GENERAL NOTES:

1. Signal supports shall be designed in accordance with the AASHTO Standard Specifications for Structural Supports for Highway Signs, Luminaires and Traffic Signals 4th edition, 2001, 2002, and 2003 interim revisions.
2. All traffic signal supports shall conform to the design criteria and details shown on these drawings except as approved by the Engineer.
3. The design basic wind speed (3 second gust) shall be 110 mph, gust factor G = 1.14, Ir = 1.0 (50 yr recurrence interval), Fatigue Category II, no galloping, and truck speed = 55 mph.
4. Signal poles from this standard are not allowed over highways I-5, I-84, I-205, I-405, US 26 (Sunset Hwy) between mile points 64.3 - 73.0, I-105, and I-82. Signal poles on these highways require a Fatigue Category I.
5. Pole and arm shafts may be either round, hexdecagonal, dodecagonal, or octagonal but shapes shall not be mixed on a project. Dimensional tolerances of ASTM A595 shall apply to all tapered steel tubing members. Additionally, the diameter of round tapered steel tubing members or the dimensions across the flats of octagonal tapered steel tubing members shall not vary more than 2% from specified dimension. Two ply and fluted poles or arms are not permitted.
6. Pole taper shall be equal to .0117 in/in.
7. Anchor rods shall conform to ASTM Specification F1554 Gr. 55, Supplemenetary Requirement "S2" that include grade and manufacturer's identification.
8. High strength bolts shall conform to ASTM Specification A325 Type 1.
9. Nuts for high strength bolts shall be heavy hex and conform to ASTM A563 Grade DH with supplmentary requirements "S1" and "S2".
10. Hardened steel washers shall conform to ASTM F436 Type 1.
11. Direct Tension Indicators (DTI) shall be the compressible-washer type, mechanically galvanized, conforming to ASTM F959.
12. Steel sheet for poles and arm shall conform ASTM A595, Grades A or B, ASTM A572 Gr. 50, or approved equal. All other steel sheet and plate shall conform to AASHTO specification M223 (ASTM A572), or approved equal. Supplement S18 of ASTM A6 regarding maximum tensile strength shall apply.
13. All structural steel including fasteners shall be hot dip galvanized after fabrication unless otherwise noted.
14. Galvanize-Control Silicon, typical. Silicon content of the base metal shall be in the range of 0 to 0.04% or 0.15 to 0.25%.
15. Footing concrete shall be Commercial Grade Concrete (fc=3000 psi) per Specification Section 440. Grout in grout pad shall be non-shrink high early strength grout (non-ferrous) with a minimum strength of 5000 psi.
16. Reinforcing steel shall conform to AASHTO M31, Grade 60 (ASTM A615 or A706). A min. lap splice length of 32 bar diameters shall be used unless shown otherwise.
17. Computed deflection of these poles at full design loading shall be limited to 5% of the pole length. Computed dead load deflection of the poles shall be limited to 1% of the pole length. Pole shall be raked to offset the computed dead load deflection. Computed deflection (ignoring pole bending and/or rotation) of signal arms shall not exceed that listed in the Signal Arm Deflection Table on TM650. Additionally, the amplitude (maximum up to maximum down as measured at the tip of the arm) of wind induced vertical oscillations shall not exceed 1.5% of the signal arm length. Luminaire arms and pole extensions to support luminaire arms shall meet requirements of drawing TM629.
18. Hubs for cabinets and/or other appurtenances shall be welded into the pole prior to galvanizing. Poles may be tapped for up to 1" galvanized bolts after pole has been galvanized.
19. Longitudinal seam welds within 6" of a cirumferential weld shall be complete penetration welds. Weld inspection shall be in accordance with AWS D1.1 and the special provisions. Inspect seam welds using cyclically loaded criteria. Hubs shall be 3000# threaded forged carbon steel flat weld hubs by Anvil Products Inc., Phoenix Forging Co., Bonney Forge & Tool Works or approved equal.
20. Grounding terminal shall be ½" UNC x 1½" Type 308, 309 or 310 threaded stainless steel weld studs.
21. Tighten 4 bolt arm connection bolts and tighten anchor rods in accordance with 962.46(j)(2).
22. Tighten 8 bolt arm connection bolts in accordance with 930.40(d).
23. Round and smooth all edges along electrical way.
24. The Minimum arm flange thickness shall be equal to the value where prying action is not included in the bolt calculation.

Standard Maximum Base Reactions

Signal Pole Type	Signal Arm Lengths	Wind Load Case II				Controlling Fatigue		
		Axial (Kips)	Shear (Kips)	Moment (Kip-ft)	Torque (Kip-ft)	Shear (Kips)	Moment (Kip-ft)	Torque (Kip-ft)
SM1	15'	2.10	5.15	80.39	16.95	0.68	10.39	2.13
SM2	20', 25'	2.66	6.23	105.41	42.54	0.82	13.35	5.37
SM3	30', 35'	3.49	7.77	138.43	82.87	1.00	17.10	10.31
SM4	40', 45'	4.51	9.00	173.46	132.72	1.16	20.54	16.50
SM5	50', 55'	5.69	9.23	190.91	181.60	1.18	21.62	22.55
SM1L	15'	2.96	6.09	113.28	23.22	0.79	14.08	2.84
SM2L	20', 25'	3.69	7.23	139.41	48.81	0.94	17.17	6.08
SM3L	30', 35'	4.39	8.80	176.51	87.88	1.14	21.43	11.02
SM4L	40', 45'	5.94	10.14	215.11	136.97	1.31	25.27	17.21
SM5L	50', 55'	7.34	10.56	241.17	187.96	1.34	26.49	23.26

Standard Maximum Mast Arm Reactions

Signal Pole Type	Signal Arm Lengths	Wind Load Case II			Controlling Fatigue	
		Axial (Kips)	Shear (Kips)	Moment (Kip-ft)	Shear (Kips)	Moment (Kip-ft)
SM1, SM1L	15'	0.06	1.98	18.44	0.23	2.18
SM2, SM2L	20', 25'	0.10	3.14	46.20	0.37	5.48
SM3, SM3L	30', 35'	0.15	4.51	89.42	0.53	10.51
SM4, SM4L	40', 45'	0.23	5.91	146.67	0.67	16.82
SM5, SM5L	50', 55'	0.34	6.78	211.94	0.70	22.99

Luminaire Arm Reactions

Arm Lengths	Wind Load Case II			Controlling Fatigue	
	Axial (Kips)	Shear (Kips)	Moment (Kip-ft)	Shear (Kips)	Moment (Kip-ft)
6'	0.03	0.31	1.49	0.03	0.15
10'	0.06	0.38	2.85	0.04	0.29
15'	0.08	0.47	4.96	0.05	0.51
20'	0.05	0.55	7.24	0.06	0.74

Accompanied by dwgs. TM650, TM652, TM653, TM654

CALC. BOOK NO. 5301

SDR DATE 10-JUL-2020

NOTE: All material and workmanship shall be in accordance with the current Oregon Standard Specifications

The selection and use of this Standard Drawing, while designed in accordance with generally accepted engineering principles and practices, is the sole responsibility of the user and should not be used without consulting a Registered Professional Engineer.

OREGON STANDARD DRAWINGS

TRAFFIC SIGNAL SUPPORTS NOTES AND REACTIONS

2021

DATE	REVISION DESCRIPTION
07/20	Added Accompanied by dwg TM654.

tm651.dgn 10-JUL-2020

TM651

Effective Date: December 1, 2020 – May 31, 2021

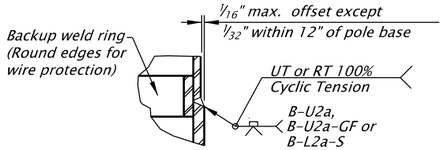

POLE AND ARM SPLICE WELD DETAILS

No Scale

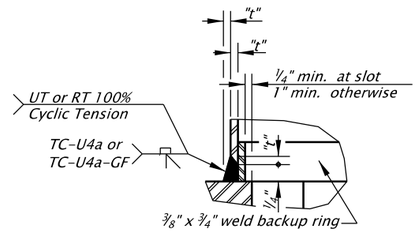

TC-U4a WELD DETAIL

No Scale

Mast arm Connection				
Signal Arm Lengths	N Number	D Bolt Diam.	BC Bolt Circle	V Bolt Spacing
15'	4	1"	9 1/2"	——
20', 25'	4	1 1/4"	14"	——
30', 35'	4	1 1/2"	15 1/2"	——
40', 45'	8	1 "	——	5"
50', 55'	8	1 1/4"	——	6"

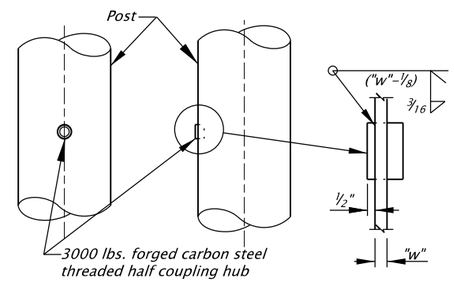

HUB WELD DETAIL

No Scale

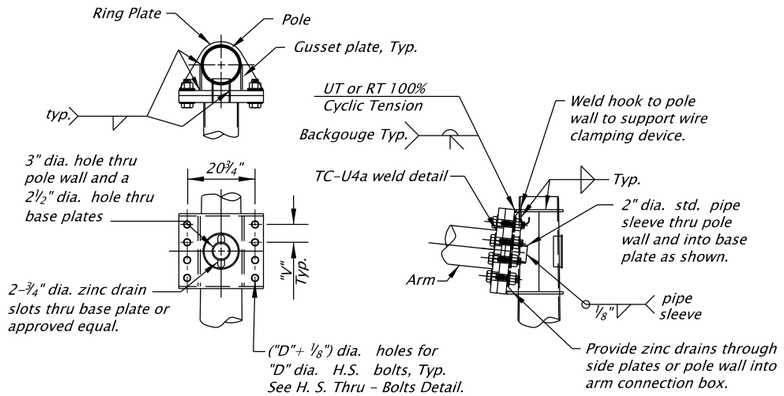

8 BOLT ARM CONNECTION DETAILS

No Scale

ARM CONNECTION NOTES:

Gusset plates are 1/4" min. thickness.
Ring plates are 3/8" min. thickness.
See general notes on TM651 for bolt tightening.

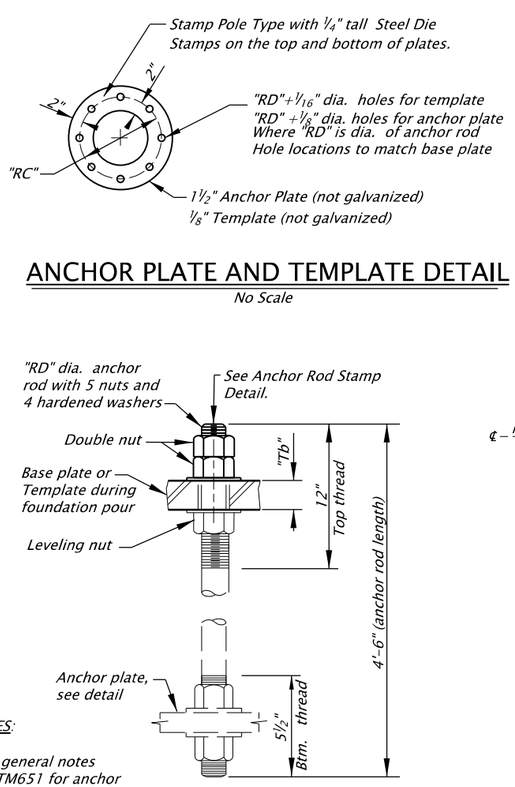

ANCHOR PLATE AND TEMPLATE DETAIL

No Scale

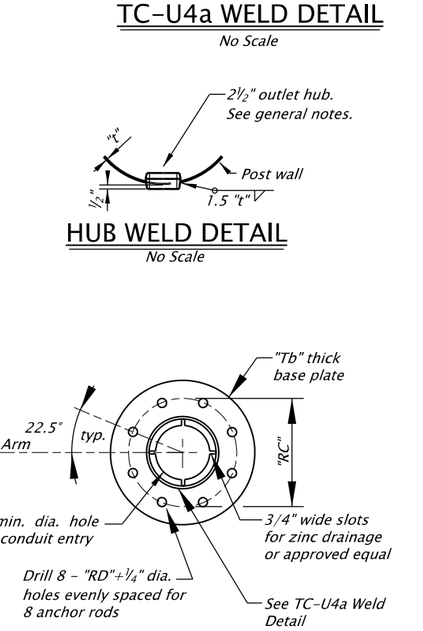

HUB WELD DETAIL

No Scale

NOTES:

- See general notes on TM651 for anchor rod tightening.
- "Tb" determined by manufacturer.

ANCHOR ROD DETAIL

No Scale

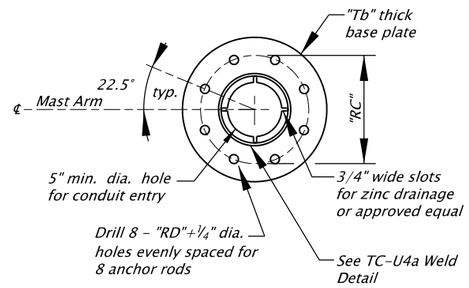

PLAN - BASE PLATE

No Scale

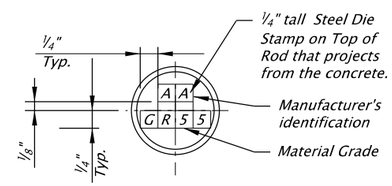

Note: The end of each anchor rod shall be color coded yellow.

ANCHOR ROD STAMP DETAIL

No Scale

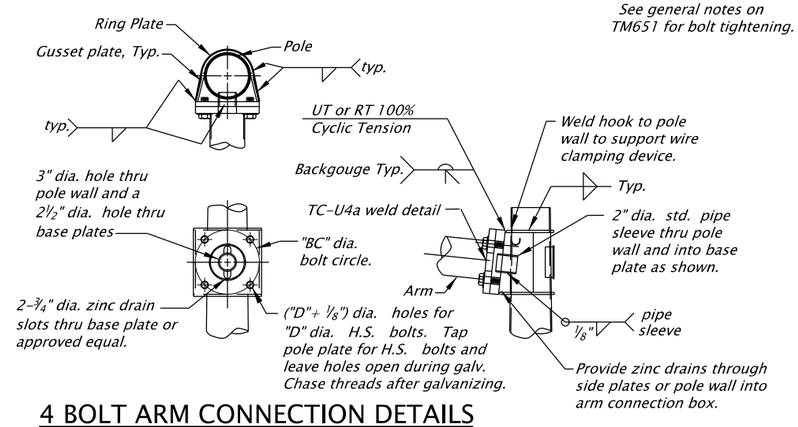

4 BOLT ARM CONNECTION DETAILS

No Scale

Anchor Rods and Base Plate Data			
Mastarm Pole Type	Strain Pole Type	RD Rod Diam.	RC Rod Circle
SM1	-----	1 1/4"	16 1/2"
SM2, SM1L	-----	1 1/2"	17"
SM3, SM2L	STP1, STP1L, STP2, STP2L	1 1/2"	20"
SM4, SM3L	STP3, STP3L, STP4, STP4L	1 3/4"	22"
SM5, SM4L	-----	1 3/4"	23"
SM5L	STP5, STP5L, STP6, STP6L, STP7, STP7L	2"	23 1/2"

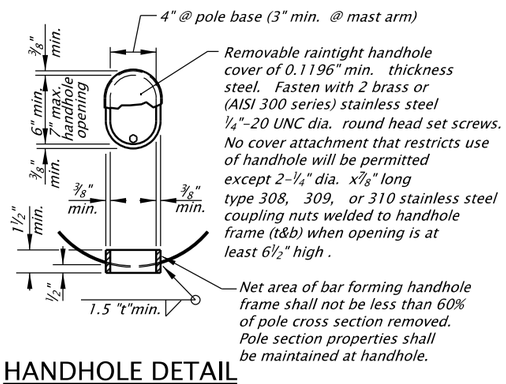

HANDHOLE DETAIL

No Scale

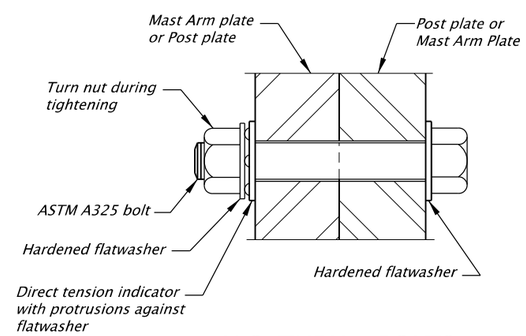

H.S. THRU - BOLTS

No Scale

Accompanied by dwgs. TM650, TM651, TM653, TM654

CALC. BOOK NO. 5301

SDR DATE 10-JUL-2020

NOTE: All material and workmanship shall be in accordance with the current Oregon Standard Specifications

The selection and use of this Standard Drawing, while designed in accordance with generally accepted engineering principles and practices, is the sole responsibility of the user and should not be used without consulting a Registered Professional Engineer.

OREGON STANDARD DRAWINGS

TRAFFIC SIGNAL SUPPORTS STEEL DETAILS

2021

DATE	REVISION DESCRIPTION
07/20	Added Accompanied by dwg TM654.

tm652.dgn 10-JUL-2020

TM652

Effective Date: December 1, 2020 – May 31, 2021

Standard Foundations					
Foundation Number	Mastarm Pole Types	"FD" Diameter Min.	Vertical Rebar	Hoop Size and Spacing	Hoop Lap Length
1	SM1	36"	8-#8	#4 at 6"	18"
2	SM2, SM1L	36"	8-#8	#4 at 6"	18"
3	SM3, SM2L	36"	8-#8	#4 at 6"	18"
4	SM4, SM3L	42"	10-#8	#5 at 6"	21"
5	SM5, SM4L	42"	10-#9	#5 at 6"	21"
6	SM5L	42"	10-#9	#5 at 6"	21"

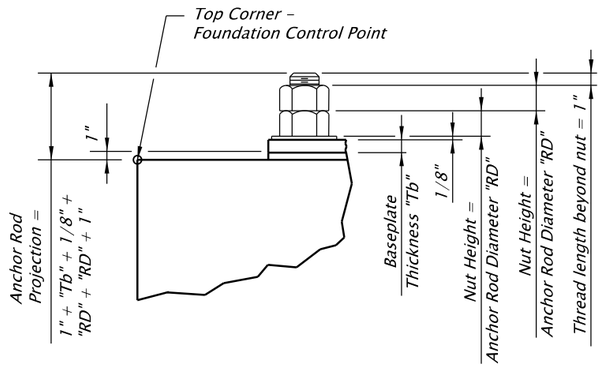

PROJECTION DETAIL

No Scale

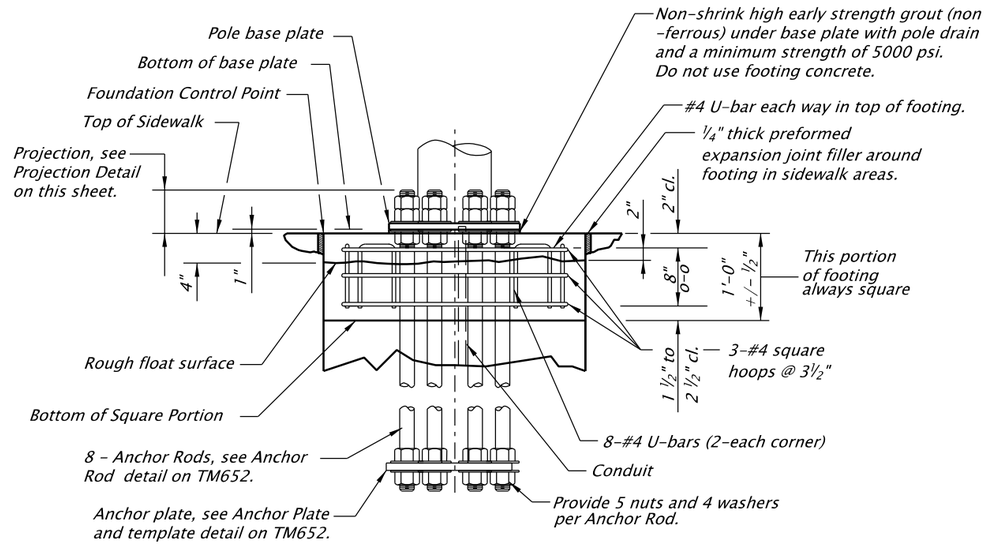

ELEVATION - TOP OF FOOTING

No Scale

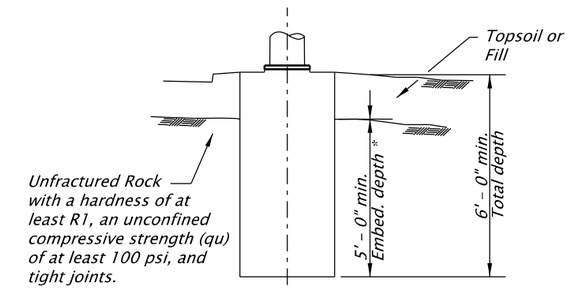

* - or embed to a total depth that is at least equal to the required footing depth.

ROCK INSTALLATION REQUIREMENTS

No Scale

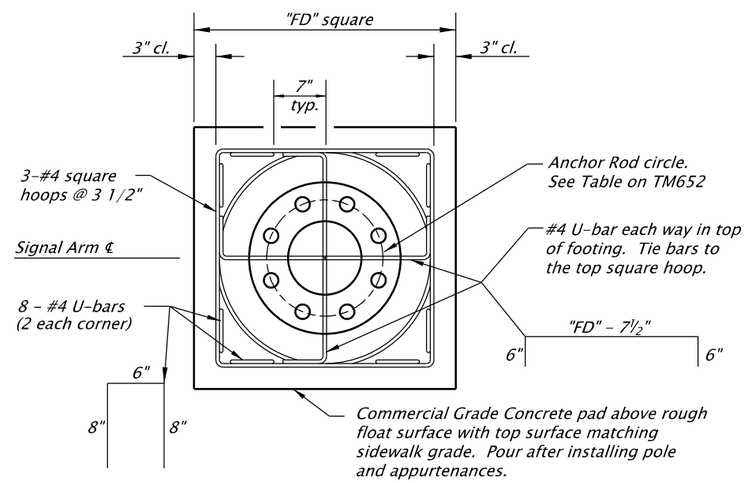

PLAN - TOP OF FOOTING

No Scale

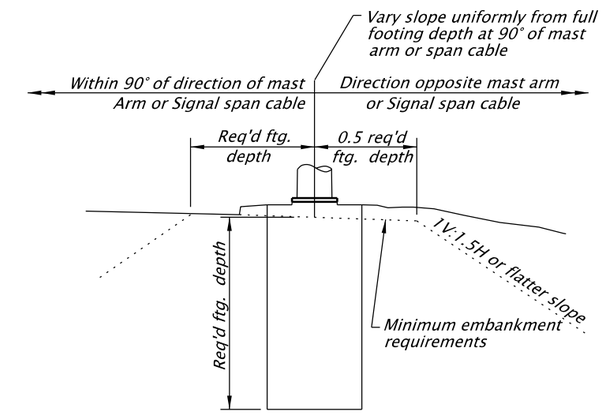

MINIMUM EMBANKMENT REQUIREMENTS

No Scale

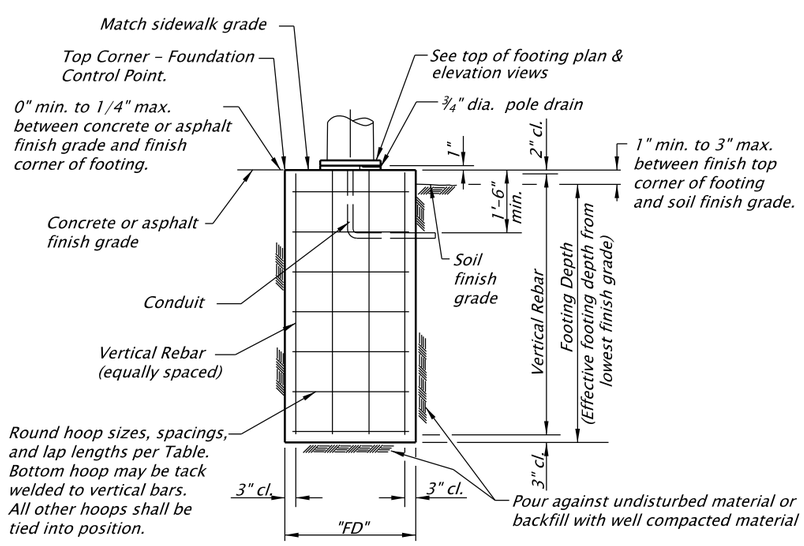

TYPICAL FOOTING ELEVATION

No Scale

NOTES:

See TM651 for general notes.
The pier torsional forces have been designed according to the ACI 318.

Accompanied by dwgs. TM650, TM651, TM652, TM654

CALC. BOOK NO. 5323

SDR DATE 10-JUL-2020

NOTE: All material and workmanship shall be in accordance with the current Oregon Standard Specifications

The selection and use of this Standard Drawing, while designed in accordance with generally accepted engineering principles and practices, is the sole responsibility of the user and should not be used without consulting a Registered Professional Engineer.

OREGON STANDARD DRAWINGS

TRAFFIC SIGNAL SUPPORTS FOUNDATION REQUIREMENTS

2021

DATE	REVISION DESCRIPTION
07/20	Added Accompanied by dwg TM654.

tm653.dgn 10-JUL-2020

TM653

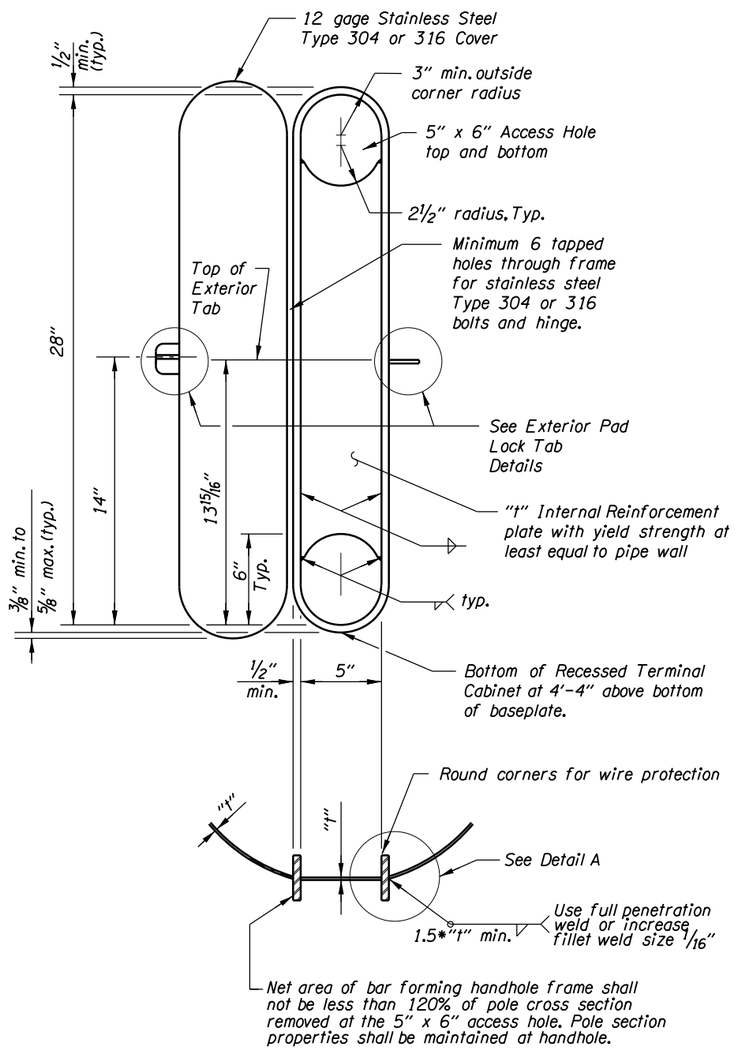

RECESSED TERMINAL CABINET DETAIL

No scale

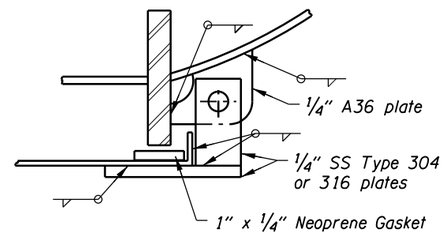

SECTION A-A

No scale

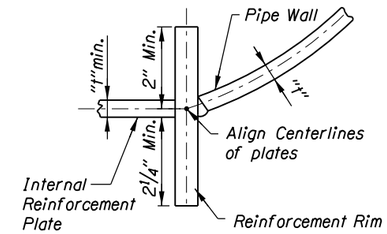

DETAIL A

No scale

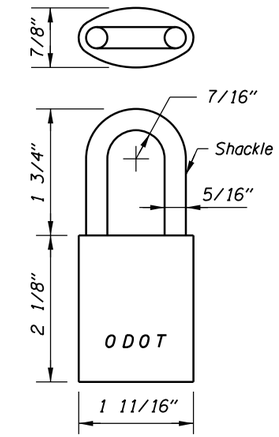

ODOT LOCK DETAILS

No scale
(ODOT Supplied Post Construction)

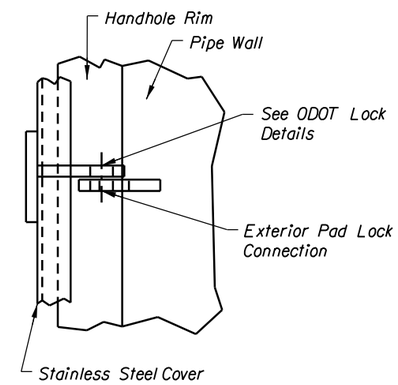

SECTION B-B

No scale

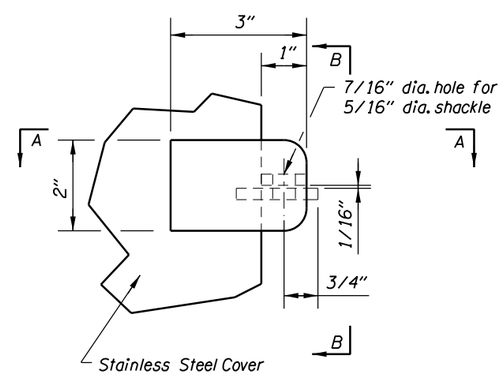

EXTERIOR PAD LOCK DETAILS

No scale

Accompanied by dwgs. TM650, TM651, TM652, TM653, TM655, TM656, TM657, TM658, TM679

CALC. BOOK NO. 5301

SDR DATE 10-JUL-2020

NOTE: All material and workmanship shall be in accordance with the current Oregon Standard Specifications

The selection and use of this Standard Drawing, while designed in accordance with generally accepted engineering principles and practices, is the sole responsibility of the user and should not be used without consulting a Registered Professional Engineer.

OREGON STANDARD DRAWINGS

TRAFFIC SIGNAL POLE RECESSED TERMINAL CABINET

2021

DATE	REVISION DESCRIPTION
07/20	Drawing created.

tm654.dgn 10-JUL-2020

TM654

STANDARD SIGNAL ARM LOADS									DEFLECTIONS
Signal Pole Type	Signal Arm Length	Signals			Sign			DS Max. for S2 *	Estimated "defl" End of Arm
		4L Qty.	2 Qty.	5 * Qty.	S1 Qty.	S2 * Qty.	Horz. Blank		
SM6L	60', 65'	1	2	1	4	1	58'-0"	21'-1"	2'-9"
SM7L	70', 75'	1	2	1	4	1	68'-0"	21'-1"	3'-9"

* - Load location is the closest sign or signal of that type to the vertical post.

1. Camera mounted on 6 ft arm placed at any location on signal arm.
2. Fire Pre-Emption may be placed at any location along the mast arm.
3. Modifications to the loading shown require analysis to verify the structural adequacy of the pole.
4. Physical fit of the loading must be verified.
5. 60' and 70' mast arm lengths use the same design as the longer 65' and 75' lengths with the end 5' removed.

VERTICAL POST LOADS								
Description	Maximum Centerline Elevation	Height (Each)	Width (Each)	Depth (Each)	Area Front (sq. ft)	Area Side (sq. ft)	Area Bottom (sq. ft)	Weight 0" Ice (lbs)
2-Ped. Push Buttons	3'-6"	7 3/4"	5"	3 3/8"	0.27	0.18	0.12	3.0
Controller Cabinet	5'-9"	46"	24"	22"	7.67	7.03	3.67	300
2-Pedestrian Signals	8'-3 1/2"	18 3/4"	19"	19"	2.47	2.47	2.51	25.0
Terminal Cabinet	10'-9"	18 1/8"	6 3/4"	8 3/8"	0.85	1.05	0.39	25.0
Guide Sign (S3)	15'-0"	72"	120"	8 3/8"	60.0	1.00	1.67	395
Photoelectric Cell	38'-4"	2 1/4"	3 1/4"	3 1/4"	0.05	0.05	0.07	5.0

1. Physical fit of the loading must be verified.

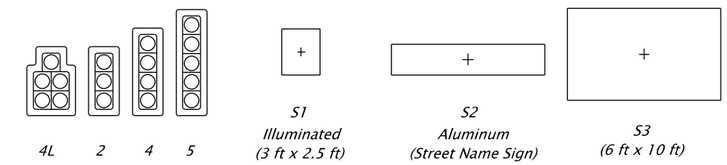

SIGNAL POLE APPURTENANCE TYPES

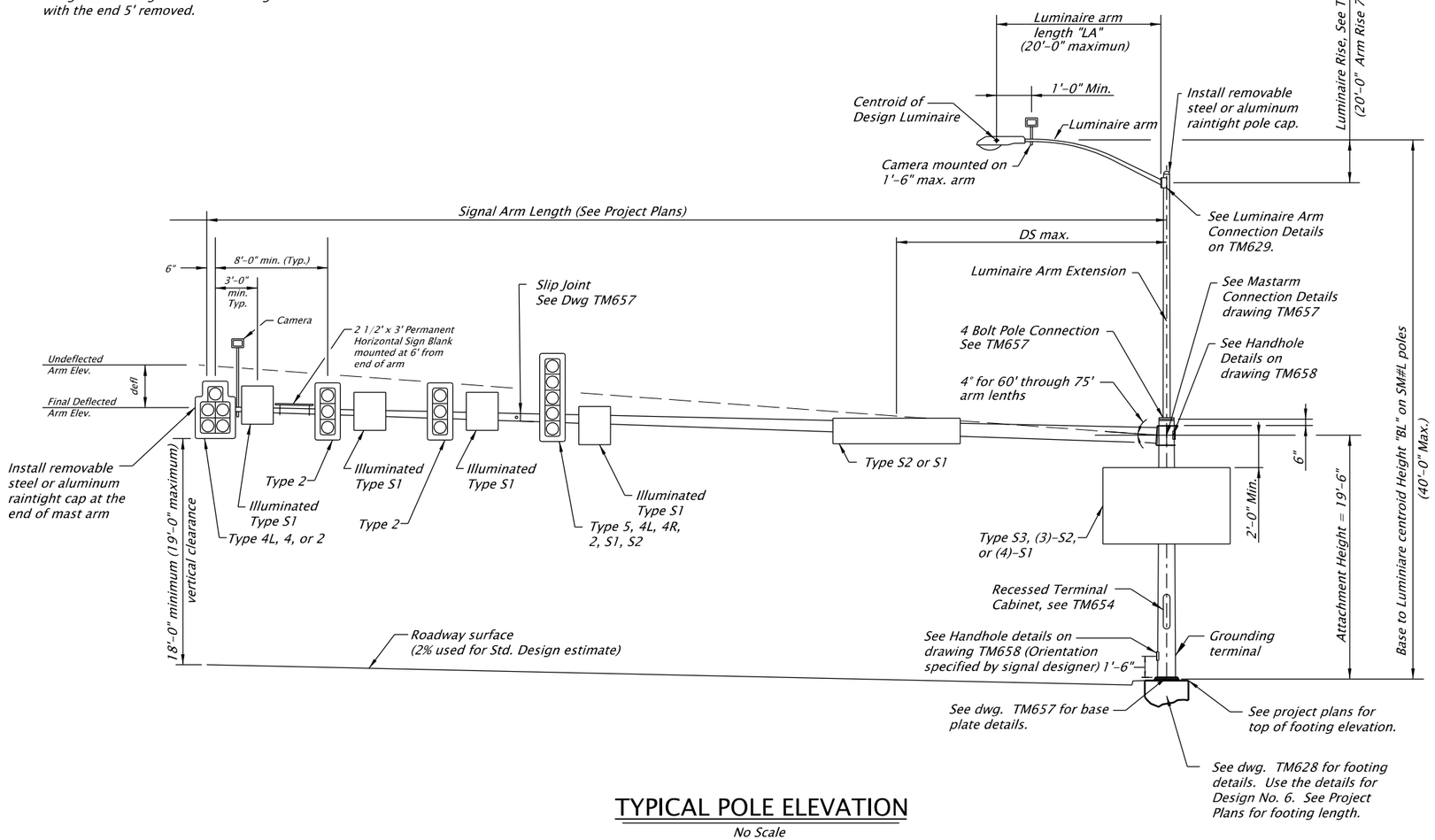

TYPICAL POLE ELEVATION

No Scale

APPURTENANCE LOADS				
Type	Area Front (sq. ft)	Area Side (sq. ft)	Area Bottom (sq. ft)	Weight 0" Ice (lbs)
4L	12.4	6.61	3.64	145
2	8.67	6.61	1.95	85.0
4	11.0	8.49	1.95	97.0
5	13.3	10.36	1.95	142
S1	7.50	2.38	1.72	71.0
S2	21.0	0.00	1.67	105
Horz. Blank	1.72	2.38	7.50	45.0
Signal Camera	1.64	2.55	0	60
Lum. Camera	0.65	1.42	0	25

Accompanied by dwgs. TM654, TM656, TM657, TM658, TM628

CALC. BOOK NO. 7088

SDR DATE 10-JUL-2020

NOTE: All material and workmanship shall be in accordance with the current Oregon Standard Specifications

The selection and use of this Standard Drawing, while designed in accordance with generally accepted engineering principles and practices, is the sole responsibility of the user and should not be used without consulting a Registered Professional Engineer.

OREGON STANDARD DRAWINGS

TRAFFIC SIGNAL 60' THROUGH 75' MAST ARM SUPPORTS GENERAL DETAILS & DESIGN CRITERIA

2021

DATE	REVISION DESCRIPTION
07/20	Replaced hub with recessed terminal cabinet, added accompanied by dwg TM654, and changed sign 7' distance to 6'.

tm655.dgn 10-JUL-2020

TM655

Effective Date: December 1, 2020 – May 31, 2021

GENERAL NOTES:

1. *Signal supports shall be designed in accordance with the AASHTO Standard Specifications for Structural Supports for Highway Signs, Luminaires and Traffic Signals LRFD 1st edition with 2017 and 2018 interim revisions.*
2. *All traffic signal supports shall conform to the design criteria and details shown on these drawings except as approved by the Engineer.*
3. *The design basic wind speed (3 second gust) shall be 145 mph, gust factor G = 1.14, 50 yr recurrence, Fatigue Category I, no galloping, and truck speed = 65 mph.*
4. *The design service basic wind speed (3 second gust) shall be 91 mph.*
5. *Signal poles from this standard are not allowed over highways I-5, I-84, I-205, I-405, US 26 (Sunset Hwy) between mile points 64.3 - 73.0, I-105, and I-82.*
6. *Pole and arm shafts must be round. Dimensional tolerances of ASTM A595 shall apply to all tapered steel tubing members. Additionally, the diameter of round tapered steel tubing members not vary more than 2% from specified dimension. Two ply and fluted poles or arms are not permitted.*
7. *Pole taper shall be equal to .0117 in/in.*
8. *Anchor rods shall conform to ASTM Specification F1554 Gr. 55, Supplemenetary Requirement "S2" that include grade and manufacturer's identification.*
9. *High strength bolts shall conform to ASTM Specification F3125 Grade A325 Type 1.*
10. *Nuts for high strength bolts shall be heavy hex and conform to ASTM A563 Grade DH with supplmentary requirements "S1" and "S2".*
11. *Hardened steel washers shall conform to ASTM F436 Type 1.*
12. *Direct Tension Indicators (DTI) shall be the compressible-washer type, mechanically galvanized, conforming to ASTM F959.*
13. *Steel sheet for poles and arm shall conform ASTM A595, Grades A or B, ASTM A572 Gr. 50, or approved equal. All other steel sheet and plate shall conform to AASHTO specification M223 (ASTM A572), or approved equal. Supplement S18 of ASTM A6 regarding maximum tensile strength shall apply.*
14. *All structural steel including fasteners shall be hot dip galvanized after fabrication unless otherwise noted.*
15. *Galvanize-Control Silicon, typical. Silicon content of the base metal shall be in the range of 0 to 0.06% or 0.13% to 0.25%.*
16. *Footing concrete shall be according to TM628.*
17. *Reinforcing steel shall conform to AASHTO M31, Grade 60 (ASTM A615 or A706). A min. lap splice length of 32 bar diameters shall be used unless shown otherwise.*
18. *Computed deflection of these poles at full design loading shall be limited to 5% of the pole length. Computed dead load deflection of the poles shall be limited to 1% of the pole length. Rake pole, apply mast arm and appurtenance loads, and verify final pole position is plumb.*
19. *Luminaire arms and pole extensions to support luminaire arms shall meet requirements of drawing TM629.*
20. *Hubs for cabinets and/or other appurtenances shall be welded into the pole prior to galvanizing. Poles may be tapped for up to 1" galvanized bolts after pole has been galvanized.*
21. *Longitudinal seam welds within 6" of a cirumferential weld shall be complete penetration welds. Weld inspection shall be in accordance with AWS D1.1 and the special provisions. Inspect seam welds using cyclically loaded criteria. Hubs shall be 3000# threaded forged carbon steel flat weld hubs by Anvil Products Inc., Phoenix Forging Co., Bonney Forge & Tool Works or approved equal.*
22. *Grounding terminal shall be ½" UNC x 1½" Type 308, 309 or 310 threaded stainless steel weld studs.*
23. *Tighten 4 bolt connection bolts in accordance with 962.46(j)(2).*
24. *Tighten 8 bolt arm connection bolts in accordance with 930.40(d).*
25. *Round and smooth all edges along electrical way.*

Accompanied by dwgs. TM654, TM655, TM657, TM658, TM628

CALC. BOOK NO. 7088

SDR DATE 10-JUL-2020

NOTE: All material and workmanship shall be in accordance with the current Oregon Standard Specifications

The selection and use of this Standard Drawing, while designed in accordance with generally accepted engineering principles and practices, is the sole responsibility of the user and should not be used without consulting a Registered Professional Engineer.

OREGON STANDARD DRAWINGS

TRAFFIC SIGNAL 60' THROUGH 75' MAST ARM SUPPORTS NOTES

2021

DATE	REVISION DESCRIPTION
07/20	Added Accompanied by dwg TM654.

tm656.dgn 10-JUL-2020

TM656

Effective Date: December 1, 2020 – May 31, 2021

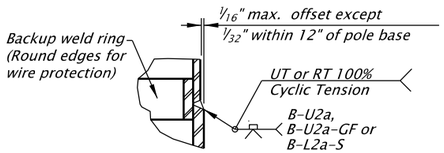

POLE AND ARM SPLICE WELD DETAILS

No Scale

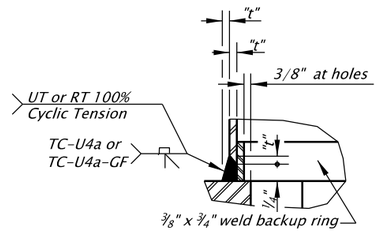

TC-U4a WELD DETAIL

No Scale

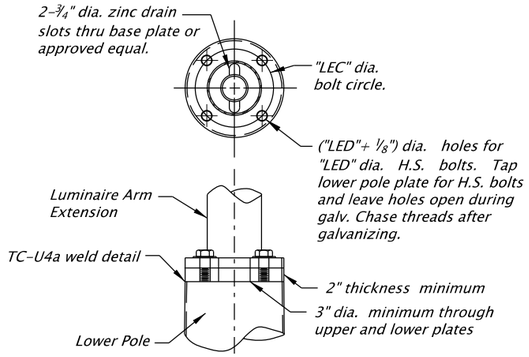

4 BOLT POLE CONNECTION DETAILS

No Scale

Mastarm Pole Type	Anchor Rod			Arm Connection			Luminaire Arm Extension Connection	
	RD Rod Diam.	RC Rod Circle	"PR"	"D"	"H"	"V"	LED Bolt Diam.	LEC Bolt Circle
SM6L	2"	28"	9"	1 1/2"	24"	8"	1"	12"
SM7L	2"	30"	9"	1 1/2"	27"	9"	1"	12"

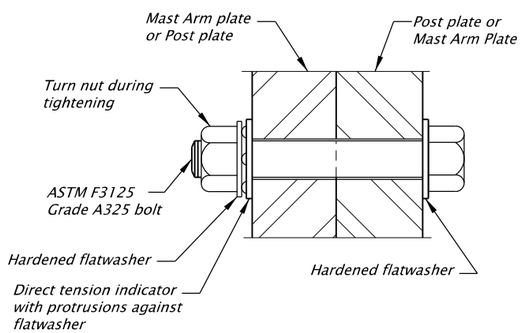

H.S. THRU - BOLTS

No Scale

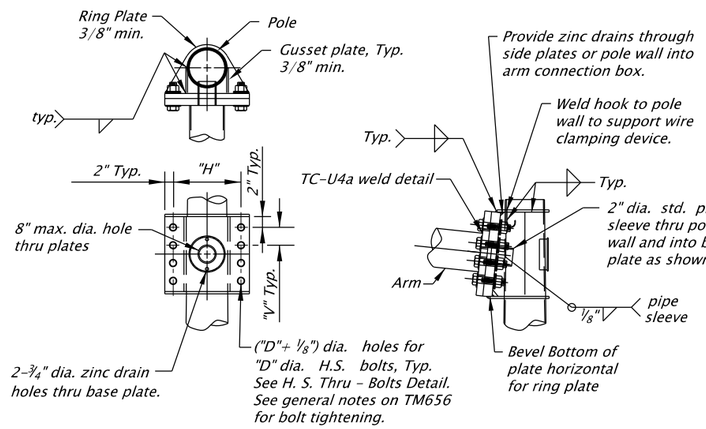

8 BOLT ARM CONNECTION DETAILS

No Scale

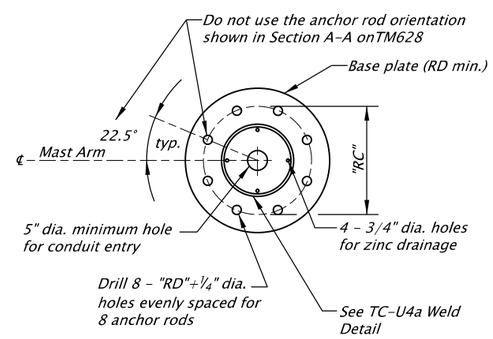

PLAN - BASE PLATE

No Scale

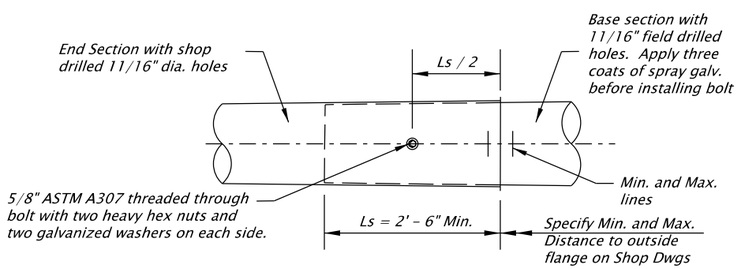

MAST ARM SLIP-JOINT SPLICE DETAILS

No Scale

Accompanied by dwgs. TM654, TM655, TM656, TM658, TM628

CALC. BOOK NO. 7088

SDR DATE 10-JUL-2020

NOTE: All material and workmanship shall be in accordance with the current Oregon Standard Specifications

The selection and use of this Standard Drawing, while designed in accordance with generally accepted engineering principles and practices, is the sole responsibility of the user and should not be used without consulting a Registered Professional Engineer.

OREGON STANDARD DRAWINGS

TRAFFIC SIGNAL 60' THROUGH 75' MAST ARM SUPPORTS STEEL DETAILS (SH. 1)

2021

DATE	REVISION DESCRIPTION
07/20	Added Accompanied by dwg TM654.

tm657.dgn 10-JUL-2020

TM657

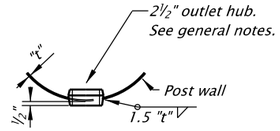

HUB WELD DETAIL

No Scale

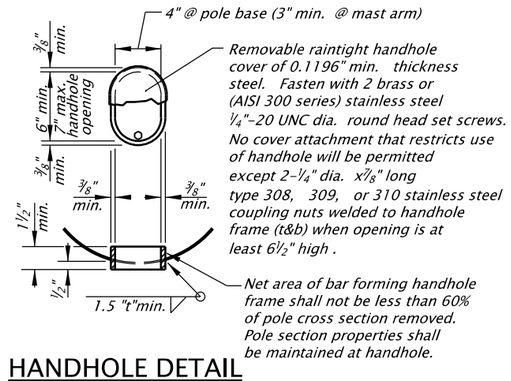

HANDHOLE DETAIL

No Scale

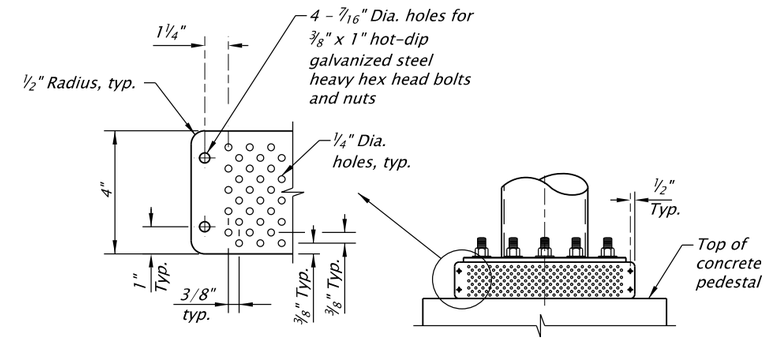

ELEVATION - RAT BAND

No Scale

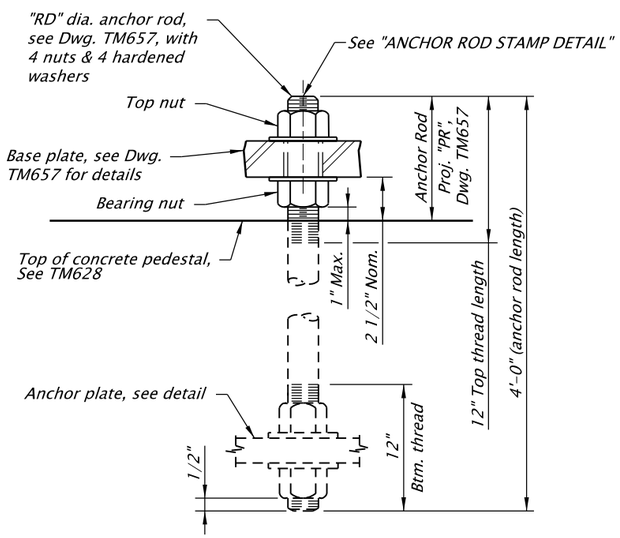

DETAILS @ TOP AND BOTTOM OF ANCHOR ROD

No Scale

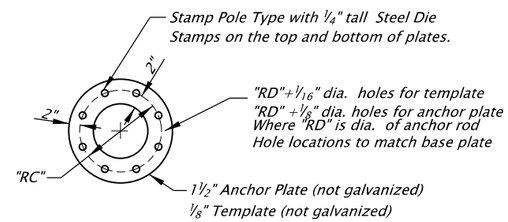

ANCHOR PLATE AND TEMPLATE DETAIL

No Scale

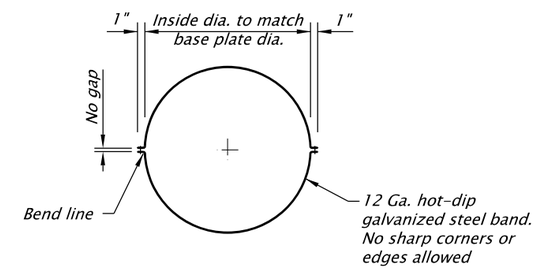

PLAN - RAT BAND

No Scale

Anchor Rod Note: See TM657 for "RC" and "RD" values.

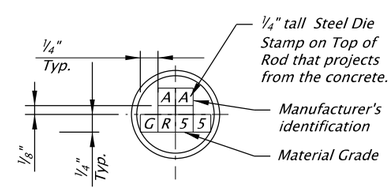

Note: The end of each anchor rod shall be color coded yellow.

ANCHOR ROD STAMP DETAIL

No Scale

Accompanied by dwgs. TM654, TM655, TM656, TM657, TM628

CALC. BOOK NO. 7088

SDR DATE 10-JUL-2020

NOTE: All material and workmanship shall be in accordance with the current Oregon Standard Specifications

The selection and use of this Standard Drawing, while designed in accordance with generally accepted engineering principles and practices, is the sole responsibility of the user and should not be used without consulting a Registered Professional Engineer.

OREGON STANDARD DRAWINGS

TRAFFIC SIGNAL 60' THROUGH 75' MAST ARM SUPPORTS STEEL DETAILS (SH. 2)

2021

DATE	REVISION DESCRIPTION
07/20	Added Accompanied by dwg TM654.

tm658.dgn 10-JUL-2020

TM658

Effective Date: December 1, 2020 – May 31, 2021

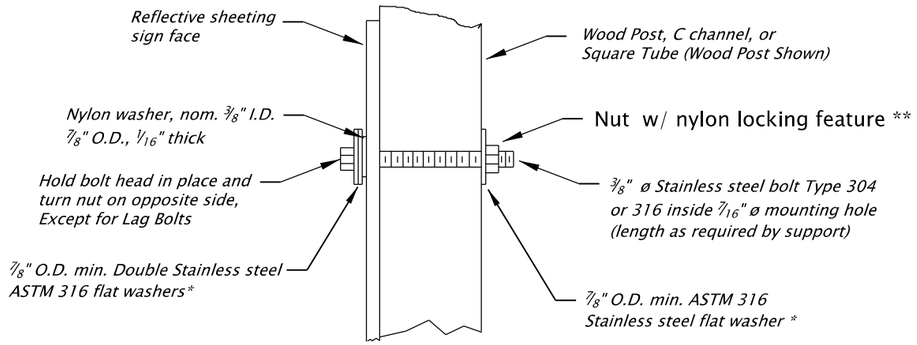

Note:
1)When signs are placed on opposing sides of post, 3/8" x 3" lag screws can be used instead of through bolt.
2) Use nylon and stainless steel washers when signs are placed on both sides of post.
3) Burr threads at junction with nut when locknuts are not used.
4) Post bolts to extend beyond the tightened nuts within the limits of 1/4" to 1".

* Stainless steel bonded sealing washer with neoprene layer is an acceptable substitue

** Acceptable substitute for nylon locking nuts:
ANCO PIN-LOC
TRI-LOC® Top Lock Locknut

SIGN ATTACHMENT DETAIL

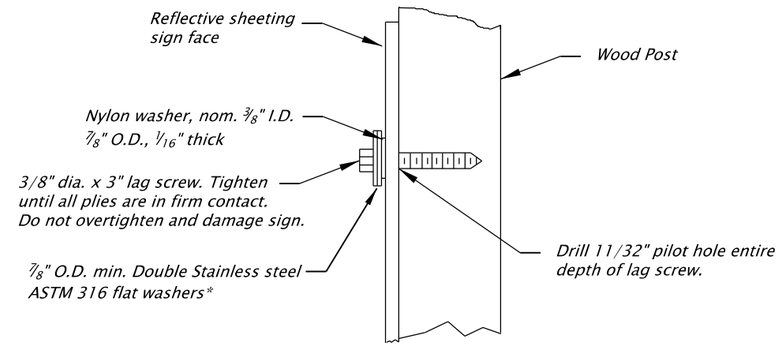

* Stainless steel bonded sealing washer with neoprene layer is an acceptable substitue

Note: This optional detail is to be used only when specified on a project.

OPTIONAL WOOD POST LAG SCREW DETAIL

CALC. BOOK NO. _____

SDR DATE 10-JUL-2020

NOTE: All material and workmanship shall be in accordance with the current Oregon Standard Specifications

The selection and use of this Standard Drawing, while designed in accordance with generally accepted engineering principles and practices, is the sole responsibility of the user and should not be used without consulting a Registered Professional Engineer.

OREGON STANDARD DRAWINGS

SIGN ATTACHMENTS

2021

DATE	REVISION DESCRIPTION
07/20	Added optional lag screw detail.

tm676.dgn 10-JUL-2020

TM676

GENERAL NOTES:

Standard Monotube VMS/Sign Bridge Structures are designed in accordance with AASHTO LRFD Specifications for Structural Supports for Highway Signs, Luminaires and Traffic Signals 1st edition, 2015 and interim revisions thru 2017.

Basic wind speed (3 second gust) used for Extreme I Limit State is 145 mph. G = 1.14, 1700 year recurrence interval, fatigue importance factor I_f = 1.0 and Exposure C were used for design.

The maximum design sign area for the Standard Monotube VMS/Sign Bridge Structure is shown on Dwg. TM693. The design sign panel and mounting members weigh 5 pounds per square foot. The design luminaire including mounting channels weighs 20 pounds per linear foot. The design luminaire wind loading area including mounting channels is 1 square foot per linear foot, has rectangular flat side shapes, is as long as the design sign, and the resulting projected area is not part of the maximum sign area. Drag coeffcient C_d used for signs is 1.20, for a maximum length/width ration of 5.0.

The allowable variation from field verified working drawing camber is -0% to +25%, post length is -0" to +3", top span length "S" is -1/4" to +1/4", span length between centers of base plates is -1/4" to +1/4", and the vertical distance between base plates "DBP" is -1/4" to +1/4". Verify that the span length between base plates is within ± 1/2" of the field surveyed span length between centers of anchor rod clusters. The two opposing diagonal distance tolerances measured from 1'-6" below the start of the bend to 6" above the higher baseplate shall be -1/2" to +1/2". The maximum offset of the arm 3/4" square bar from straight shall be +1/8" to -1/8" on each member. The frame lengths shall be measured prior to galvanizing using a steel tape or other approved measuring method.

Drag coeffcient C_d used for VMS is 1.70, and for the walkway is 1.20. The VMS design loads include 100 pounds per linear foot applied from center to center of vertical posts for the weight of a walkway along with a 500 pound concentrated live load. The design walkway wind loading area is 1.0 square feet per linear foot, extends from center to center of vertical posts, and the resulting projected area is not part of the maximum sign area. VMS dimensions and design loads are shown on TM693. The walkway vertical mounts and the VMS vertical mounts are separate.

Snow and ice loads are not included in the design loads. The Engineer shall evaluate the design in regions of heavy snow or ice accumulations.

The signs are to be positioned horizontally as shown on Project Data for Std. Monotube VMS/Sign Bridge Sheet and vertically as shown on Dwg. TM693.

Material for circular tube sections shall be ASTM A53 Grade B; ASTM A500 Grade B or C; ASTM A501 Grade A or B; or API 5L PSL2 Grade B, X42, X42M, X52, and X52M. All other structural steel shall conform to ASTM A572 Grade 50, or A992, unless noted otherwise.

Bend tube using induction heating methods in accordance with TPA-IBS-98, "Recommended Standards for Induction Bending of Pipe and Tube."

Notch toughness of all structural steel members and plates greater than 1/2" thick shall conform to Zone 2 fracture critical requirements of ASTM A709.

High strength bolts shall conform to ASTM A325, Type 1. Nuts for high strength bolts shall be heavy hex and conform to ASTM A563 Grade DH, with supplementary requirements "S1" and "S2". Hardened steel washers shall conform to ASTM F436, Type 1. Use washers under turning element in tightening unless otherwise specified.

Bolts connecting galvanized steel members to aluminum members shall meet the requirements of ASTM A193 Class 2 Grade B8M. Nuts used with A193 bolts shall be heavy hex and shall meet the requirements of ASTM A194 Grade 8M with supplementary requirement "S1". Use a stainless steel flat washer and double nut at each bolt.

Final elevations shall be field verified prior to fabrication of the post members and footing reinforcement.

All fasteners, except mechanically galvanized direct tension indicator (DTI) washers, shall be hot-dip galvanized (except stainless steel and non-ferrous fasteners). All structural steel shall be hot-dip galvanized after fabrication, unless noted otherwise.

The silicon content of the base metal shall be in the ranges of 0.0% to 0.06% or 0.13% to 0.25% for all hot-dip galvanized steel, unless noted otherwise.

All H.S. bolts shall be considered slip critical and tightened according to Section 00930.40(d)(2)a, unless noted otherwise. Design slip resistance for bolts shall conform to the Bolt Specifications for Class C slip coefficient = 0.33.

This Standard Monotube VMS/Sign Bridge has been designed for the stated loading only. No additional signs or additional loadings are permitted. Other uses and loadings shall be considered non-standard, and are outside the scope of this design.

Splices in posts or arms and welds connecting posts or arms to base connection plates shall be full penetration welds as shown on Dwg. TM623.

Fabrication drawings shall show the weight of all parts.

Verify that top of pedestal is level and at correct elevation, prior to post installation. Install sign mounts and sign on fully erected structure. Do not install sign until after support structure erection and bolt tightening is 100% complete.

A preconstruction meeting is recommended to make sure the contractor understands ODOT requirements and that ODOT understands the contractor's plan.

Use self locking nuts on non-high strength (H.S.) bolts, unless otherwise shown or specified. See Dwg. TM623 for typical high strength bolt connection.

If a 20 minute rolling traffic stop is used to install the overhead sign support arm, the rolling stop shall meet the following requirements:

a) Verify (prior to arm lift) adequate crane capacity and boom length to perform complete installation from side of road.
b) Set crane on side of road and do not re-set crane during lift.
c) Verify (prior to lift) that lifting equipment and lifting points meet requirements of plans.
d) Verify (prior to lift) that vertical end posts are at correct elevations, plumb, and that the distance between the field splices at each post matches the horizontal arm length.
e) Rig lift before beginning rolling stop.
f) Make sure all required tools and hardware are on site.
g) Do not resume traffic until all arm to post connection bolts are at least snug tight.
h) Support arm with crane until arm connection bolt tightening is 100% complete.
i) Another rolling stop will be required to install the sign onto the arm.
j) Rolling stops shall be at night and shall conform to the Special Provisions.
k) Follow all required safety procedures.

FOUNDATION NOTES:

Foundation type shall be as shown on Project Plans. Spread footing details are shown on Dwg. TM627 and drilled shaft details are shown on Dwg. TM628.

Provide shoring for the footing if required. Installation of temporary guardrail or barrier should precede any other work involving the construction of the footing.

Top surface of concrete pedestal (including area under base plate and around anchor bolts) shall be floated and troweled to a flat and level surface. This surface shall not vary more than 1/8" from a horizontal plane. Provide a 3/4" chamfer on all exposed edges of the pedestal.

Concrete for spread footings shall be Class 3600 - 3/4" Commercial Grade Concrete classified as a structural item. Concrete for drilled shafts shall be as noted on Dwg. TM628.

Place bars 2" clear of the nearest face of concrete, unless shown otherwise.

Concrete shall be placed using a tremie when free fall exceeds 4'-0". Cold joints shall be cause for rejection of the foundation, except between footing and pedestal and top of drilled shaft.

All reinforcing steel shall conform to ASTM A706 or A615 Gr. 60, unless shown otherwise.

Anchor rods shall conform to ASTM F1554, Gr. 55, with supplementary requirements "S2" that includes grade and manufacturer's identification and "S4". Anchor rod washers shall conform to ASTM F436. Anchor rod plate washers shall conform to ASTM A572 Grade 50. Anchor rod nuts shall conform to ASTM A563 Grade DH with supplementary requirements "S1" and "S2".

Anchor rod template, temporary support members, and anchor plate shall conform to ASTM A36.

Anchor rods shall be hot-dip galvanized full length.

Provide 1 -2" dia. rigid electrical conduit as shown on Dwgs. TM627 & TM628 and as directed. Extend sign support end of conduit to the center of the lower hand hole. If luminaires are not required, extend the other end of the conduit into the nearest illumination circuit junction box and identify conduit by attaching a tag which says "future sign lighting". Install "pull string" in conduit for future use. Install conduit cap on each end. When luminaires are required, extend the sign support end of conduit per Project Plans.

The elevation and location of anchor rods are critical. Use survey techniques to verify the elevation, location, and orientation of anchor bolt groups prior to placement of foundation concrete.

Where the footing of a Standard Monotube VMS/Sign Bridge Structure interferes with guard rail posts, the depth of footing may be increased to the maximum shown on Dwg. TM627, or concrete barrier may be used instead of guard rail, or guard rail posts may be attached to footing in accordance with Dwg. BR266. All buried steel shall be coated for immersion exposure with an approved product from the qualified products for structural coatings (http://www.odot.state.or.us/tsconstruction/). Prepare and coat surfaces according to Section 00594 of Oregon Std. Specifications for Construction.

CONSTRUCTION PROCEDURE AND SEQUENCE:

1. Construct foundation according to plans. Verify elevation, location and orientation of anchor rods. A steel template, shown on Dwg. TM697, shall be used to accurately locate and hold the anchor rods plumb and in proper alignment. This template shall be in place during concrete placement and shall remain in place for a minimum of 24 hours after the concrete placement has been completed. Submit anchor rod survey information before final fabrication. Out of position anchor rods and anchor rods greater than 1:40 out of plumb are cause for rejection of the foundation. Bending of anchor rods to straighten or move them into position, or alterations of the base plate shall not be permitted and are cause for rejection of the foundation and/or post weldment.
2. Pedestal pour may begin after spread footing concrete has satisfied Section 00540.52. The post erection may begin after concrete has satisfied Section 00540.52.
3. Install bearing nuts on anchor rods. Level the bearing nuts. Install hardened flat washers above bearing nuts.
4. Use crane to lift post onto anchor rods. Maintain crane connection as a safety measure until post installation is complete. No grout shall be used under the base plate. Install hardened flat washers above base plate.
5. Generously apply an approved lubricant for galvanized fasteners from the QPL to the top nut bearing surface and internal threads, and install nut on anchor rods to snug tight condition. Snug tight is defined as the condition when all plies are in firm contact and can usually be obtained by the full effort of a worker on a 12 inch long wrench or a few impacts of an impact wrench. Several passes may be required to obtain uniform tightness.
6. Tighten bearing nuts upward against base plate in a similar manner, to assure a uniform snug tight condition.
7. Lift the arm into position using a crane. Lubricate arm connection bolts with an approved lubricant for galvanized fasteners from the QPL. Maintain crane support during tightening.
8. Evenly tighten arm connection bolts to a snug tight condition, and then fully tension arm connection bolts according to Section 00930.40(d)(2)a.
9. Verify all bearing nuts and top nuts are snug tight. Mark position of each anchor rod and top nut with a felt tip pen so subsequent nut rotation can be verified. Rotate all top nuts an additional 1/6 turn in two passes (1/12 turn per pass).

LUMINAIRE NOTES:

Hubs, handholes, grounding terminals, hook and foundation conduit shall always be installed for possible future use. Luminaires, luminaire support arms and luminaire support channels noted on Dwgs. TM624 & TM625 should only be provided when luminaires are required (See Project Plans).

Conduit diameters shown on plans are nominal or trade sizes.

WALKWAY NOTES:

Grating shall be welded steel grating with 1 1/2" x 1/8" bearing bars spaced at 1 3/16" centers and 1/4" x 1/4" nominal square cross bars (or equivalent) spaced at 4" centers. Steel plates and bars including grating elements shall conform to ASTM A36 or approved equal.

Vertical posts shall be structural steel tubing conforming to ASTM Specification A500, Grade A or B.

Grating may be spliced at an interior support by welding 1/8" x 1 1/2" bars to ends of bearing bars across full width of grating and bolting bars together with 1/4" dia. bolts at 12 inch maximum centers.

All bolts, including U-bolts, shall conform to ASTM Specification A307, unless otherwise noted.

Cable shall be 3/8" dia. zinc coated 7-strand wire rope conforming to A475, Class A, with a minimum breaking strength of 11,500 lbs.

Walkways shall be installed on the structure by the manufacturer to verify physical fit and approved before galvanizing.

Accompanied by dwgs. TM627, TM628, TM693, TM695, TM696, TM697

CALC. BOOK NO. 6969-6972

SDR DATE 10-JUL-2020

NOTE: All material and workmanship shall be in accordance with the current Oregon Standard Specifications

The selection and use of this Standard Drawing, while designed in accordance with generally accepted engineering principles and practices, is the sole responsibility of the user and should not be used without consulting a Registered Professional Engineer.

OREGON STANDARD DRAWINGS

STD. MONOTUBE VMS/SIGN BRIDGE NOTES

2021

DATE	REVISION DESCRIPTION
07/20	Added 3/4" bar tolerance, walkway fit-up, X42M, and X52M.

tm694.dgn 10-JUL-2020

TM694

Effective Date: December 1, 2020 – May 31, 2021

TAPER TYPES & FORMULAS	
TAPER	FORMULA
Merging (Lane Closure)	"L"
Shifting	"L"/2 or ½"L"
Shoulder Closure	"L"/3 or ⅓"L"
Flagging (See Drg. TM850)	50' - 100'
Downstream (Termination)	Varies (See Drawings)

★ Use Pre-Construction Posted Speed to select the Speed from the Tables below:

TEMPORARY BARRIER FLARE RATE TABLE	
★SPEED (mph)	MINIMUM FLARE RATE
≤ 30	8:1
35	9:1
40	10:1
45	12:1
50	14:1
55	16:1
60	18:1
65	19:1
70	20:1

MINIMUM LENGTHS TABLE					
"L" VALUE FOR TAPERS (ft)					BUFFER "B" (ft)
★ SPEED (mph)	W = Lane or Shoulder Width being closed or shifted				
	W ≤ 10	W = 12	W = 14	W = 16	
25	105	125	145	165	75
30	150	180	210	240	100
35	205	245	285	325	125
40	265	320	375	430	150
45	450	540	630	720	180
50	500	600	700	800	210
55	550	660	770	880	250
60	600	720	840	960	285
65	650	780	910	1000	325
70	700	840	980	1000	365
FREEWAYS					
55	1000	1000	1000	1000	250
60	1000	1000	1000	1000	285
65	1000	1000	1000	1000	325
70	1000	1000	1000	1000	365

NOTES:
- For Lane closures where W < 10', use "L" value for W = 10'.
- For Shoulder closures where W < 10', use "L" value for W = 10' or calculate "L" using formula, for Speeds ≥ 45: L = WS, Speeds < 45: L = $S^2W/60$, S = Speed, W=Width

TRAFFIC CONTROL DEVICES (TCD) SPACING TABLE				
★ SPEED (mph)	Sign Spacing (ft)			Max. Channelizing Device Spacing (ft)
	A	B	C	
20 - 30	100	100	100	20
35 - 40	350	350	350	20
45 - 55	500	500	500	40
60 - 70	700	700	700	40
Freeway	1000	1500	2640	40

NOTES:
- Place traffic control devices on 10 ft. spacing for intersection and access radii.
- When necessary, sign spacing may be adjusted to fit site conditions. Limit spacing adjustments to 30% of the "A" dimension for all speeds.

NOTES:
- When paved shoulders adjacent to excavations are less than four feet wide protect longitudinal abrupt edge as shown.
- Use aggregate wedge when abrupt edge is 2 inches or greater.

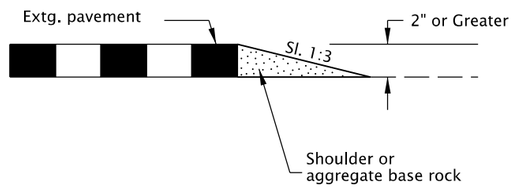

EXCAVATION ABRUPT EDGE

NOTES:
- Install PCMS beyond the outside shoulder, when possible.
- Use the appropriate type of barricade panels for PCMS location. Right shoulder, use Type B(III)R Left shoulder, use Type B(III)L
- Use six drums in shoulder taper on 20' spacing. The drums and barricade may be omitted when PCMS is placed behind a roadside barrier.
- Detail as shown is used for trailered and non-crashworthy components of:
  - Portable Traffic Signals
  - Smart Work Zone Systems

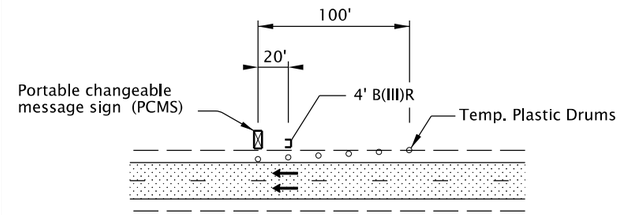

PORTABLE CHANGEABLE MESSAGE SIGN (PCMS) INSTALLATION

NOTES:
- Install Flagger Station Lighting beyond the outside shoulder, where practical.
- Use six tubular markers in shoulder taper on 10' spacing.
- Place cart / generator / power supply off of the shoulder, as far as practical.

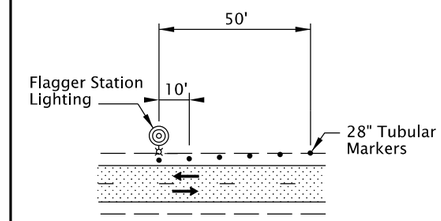

FLAGGER STATION LIGHTING DELINEATION

NOTES:
- Abrupt edges may be created by paving, operations, excavations or other roadway work. Use abrupt edge signing for longitudinal abrupt edges of 1 inch or greater.
- If the excavation is located on left side of traffic, replace the 8' B(III)R barricades with 8' B(III)L barricades and replace the "RIGHT" (CW21-8C) riders with "LEFT" (CW21-8A) riders.
- Continue signing and other traffic control devices throughout excavation area at spacings shown.
- If roll-up signs are used, attach the correct (CW21-9) plaques to the sign face using hook and loop fasteners. Place roll-up signs in advance of barricades.

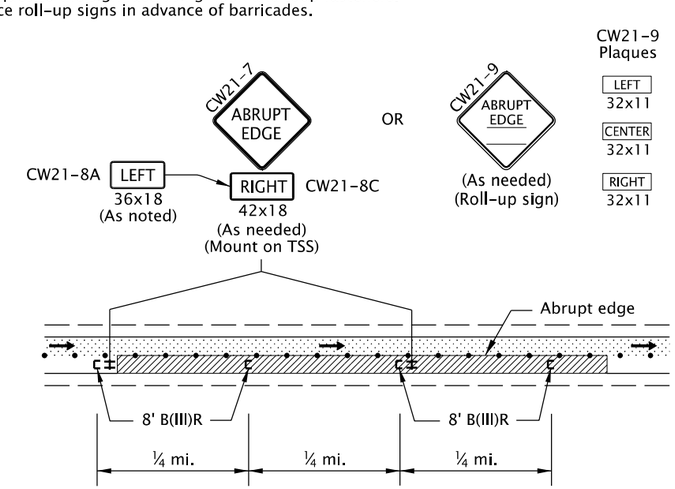

TYPICAL ABRUPT EDGE DELINEATION

GENERAL NOTES FOR ALL TCP DRAWINGS:
- Signs and other Traffic Control Devices (TCD) shown are the minimum required.
- Place a barricade approx. 20' ahead of all sequential arrow boards.
- Arrows shown in roadway are directional arrows to indicate traffic movements.
- All signs are 48" x 48" unless otherwise shown. Use flourescent orange sheeting for the background of all temporary warning signs.
- All diamond shaped warning signs mounted on barrier sign supports shall be 36" by 36". All other signs mounted on barrier sign supports shall not exceed 12 sq. ft. in total sign area.
- Low speed highways have a pre-construction posted speed of 40 mph or less. High speed highways have a pre-construction posted speed of 45 mph or higher.
- Do not locate sign supports in locations designated for bicycle or pedestrian traffic.
- Combine drawing details to complete temporary traffic control for each work activity.
- To be accompanied by Dwg. Nos. TM820 & TM821.

○ ○ ○ Temp. Plastic Drums See TCD Spacing Table for max. spacing.

• • • 28" Tubular Markers See TCD Spacing Table for max. spacing.

UNDER TRAFFIC

UNDER CONSTRUCTION

CALC. BOOK NO. TM09-01

SDR DATE 01-JUL-2020

NOTE: All material and workmanship shall be in accordance with the current Oregon Standard Specifications

The selection and use of this Standard Drawing, while designed in accordance with generally accepted engineering principles and practices, is the sole responsibility of the user and should not be used without consulting a Registered Professional Engineer.

OREGON STANDARD DRAWINGS

TABLES, ABRUBT EDGE AND PCMS DETAILS

2021

DATE	REVISION DESCRIPTION

tm800.dgn 01-JUL-2020

TM800

Effective Date: December 1, 2020 - May 31, 2021

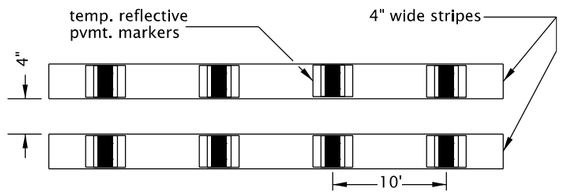

LAYOUT "A"
(Supplemented double solid lines)

TYPICAL APPLICATIONS:

- To prohibit lane changes or passing (include appropriate regulatory signs).
- Freeway or multilane shifts and crossovers.
- For projects in place through winter months.
- Two-lane, two-way centerlines.

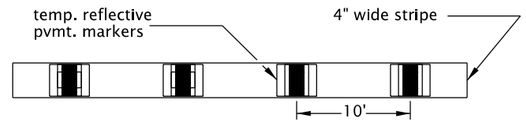

LAYOUT "B"
(Supplemented solid line)

TYPICAL APPLICATIONS:

- Alignment shifts or crossovers.
- To discourage lane changes in multilane sections.
- For projects in place through winter months.

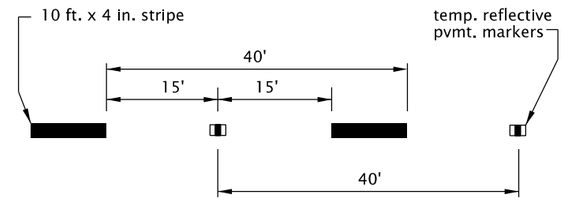

LAYOUT "C"
(Supplemented broken lines)

TYPICAL APPLICATIONS:

- Freeway and multilane broken lines.
- High ADT 2 lane roads (greater than 10,000).
- For projects in place through winter months.

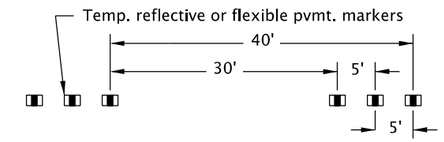

LAYOUT "D"
(Simulated broken lines)

TYPICAL APPLICATIONS:

- During staging on finished/existing surfaces.
- HMAC intermediate surfaces.
- Emulsified asphalt surface treatments (chip seals) where permanent pavement markings cannot be placed within two weeks.

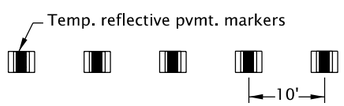

LAYOUT "E"
(Simulated Solid Lines)

TYPICAL APPLICATIONS:

- Alignment shifts or crossovers.
- To discourage lane changes in multilane sections.
- Edge lines for short durations, less than 14 days.

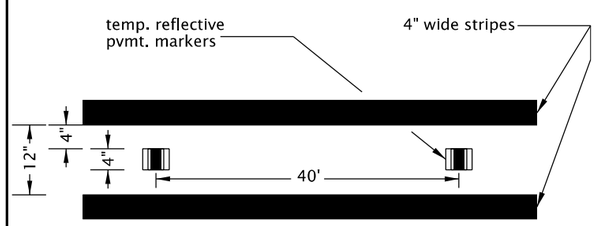

LAYOUT "F"
(Supplemented wide double solid lines)

TYPICAL APPLICATIONS:

- To prohibit lane changes or passing (include appropriate regulatory signs).
- 2 lane, 2 way centerlines.
- 2 lane, 1 way alignments on freeways or multi-lane highways.

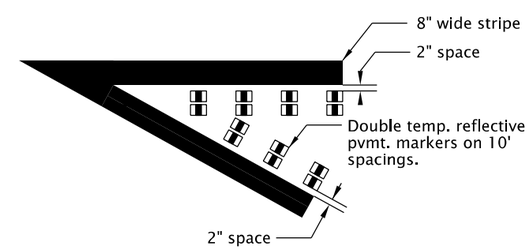

LAYOUT "G"
(Supplemented solid 8" line)

TYPICAL APPLICATIONS:

- Gore areas
- Alignment splits (bifurcations)

GENERAL NOTES FOR ALL DETAILS:

- When using Supplemented or Simulated lines:
  1. Yellow Bi-Directional Pavement Markers are required for Two-Way Traffic.
  2. White Mono-Directional Pavement Markers are required for one-way traffic or edge lines.
- Supplemented lines are painted lines enhanced with Reflective Pavement Markers.
- Simulated lines are Reflective Pavement Markers placed in a pattern to substitute for a painted line.
- Pavement marking colors shall conform to the MUTCD.

CALC. BOOK NO. N/A

SDR DATE 01-JUL-2020

NOTE: All material and workmanship shall be in accordance with the current Oregon Standard Specifications

The selection and use of this Standard Drawing, while designed in accordance with generally accepted engineering principles and practices, is the sole responsibility of the user and should not be used without consulting a Registered Professional Engineer.

OREGON STANDARD DRAWINGS

TEMPORARY PAVEMENT MARKINGS

2021

DATE	REVISION DESCRIPTION

tm810.dgn 01-JUL-2020

TM810

Effective Date: December 1, 2020 - May 31, 2021

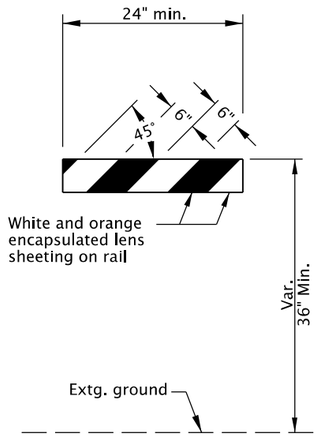

TYPE I

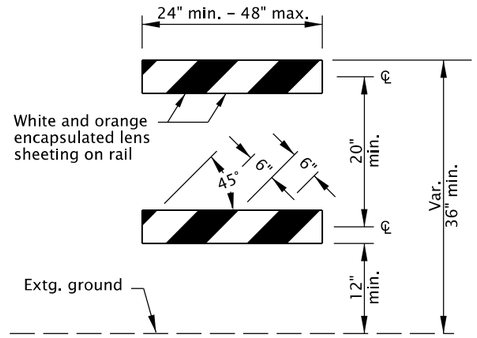

TYPE II

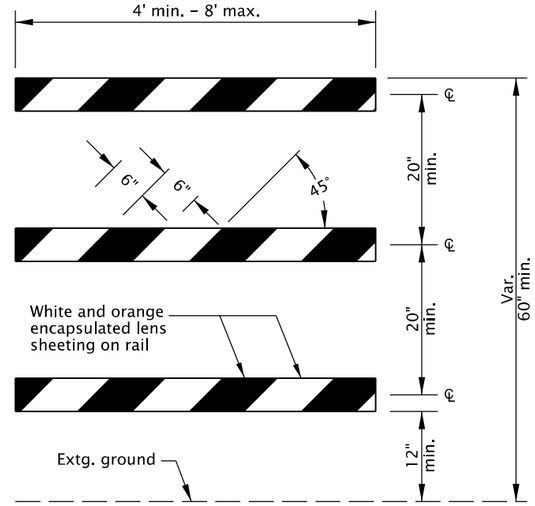

TYPE III

BARRICADE RAIL LAYOUT

GENERAL NOTES FOR ALL DETAILS:

- Sandbags (approximately 25 lb sack filled with sand) may be placed on lower frame to provide additional ballast.
- Ballast shall not extend above bottom rail or be suspended from barricade.
- For rails less than 36" long, 4" wide stripes shall be used.
- Rails must be 8" min. to 12" max. in height.
- Use barricades from ODOT Qualified Products List (QPL).
- Use 4' Type III barricades where horizontal space is limited.
- Do not block bike lanes or shoulders unless the facility is properly closed and signed.
- Do not place barricades in sidewalks unless sidewalk is closed and a temporary pedestrian accessible route (TPAR) is signed according to the TCP. See Dwg. No. TM844.

NOTES:

- Markings for barricade rails shall slope downward at an angle of 45° in the direction traffic is to pass.
- Where a barricade extends entirely across a roadway, it is desirable that the stripes slope downward in the direction toward which traffic must turn in detouring.
- Where both right and left turns are provided for, slope the chevron striping downward in both directions from the center of the barricade.
- For full roadway closures, the C or LR barricade may be used. Extend barricades completely across roadway unless access is required for local road users.

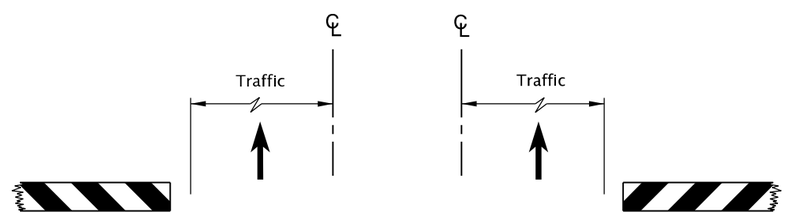

LT. SIDE - L
(For approaching traffic)

RT. SIDE - R
(For approaching traffic)

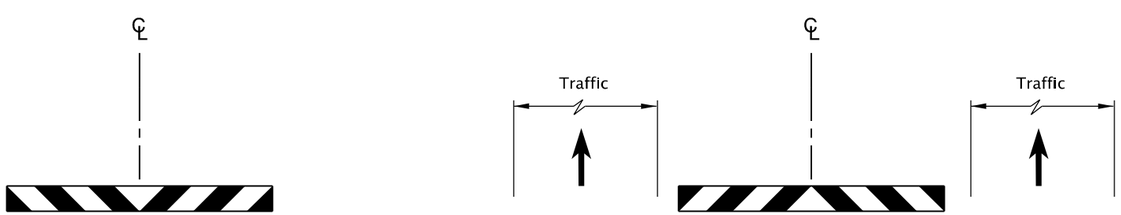

CLOSED - C
(For approaching traffic)

LT. / RT. - LR
(For approaching traffic)

DIAGRAM FOR BARRICADE PLACEMENT AND SLOPE MARKING

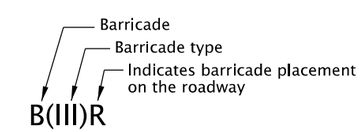

BARRICADE NOTATION

CALC. BOOK NO. N/A

SDR DATE 01-JUL-2020

NOTE: All material and workmanship shall be in accordance with the current Oregon Standard Specifications

The selection and use of this Standard Drawing, while designed in accordance with generally accepted engineering principles and practices, is the sole responsibility of the user and should not be used without consulting a Registered Professional Engineer.

OREGON STANDARD DRAWINGS

TEMPORARY BARRICADES

2021

DATE	REVISION DESCRIPTION

tm820.dgn 01-JUL-2020

TM820

Effective Date: December 1, 2020 - May 31, 2021

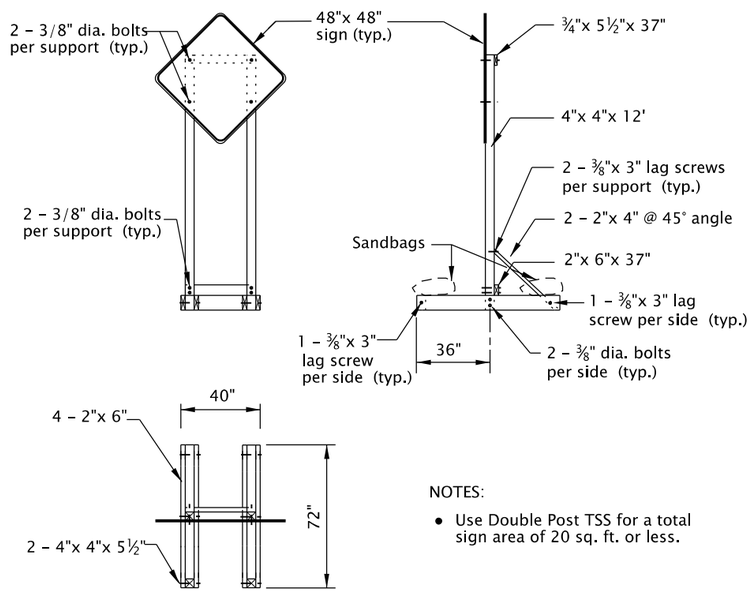

NOTES:

- Use Double Post TSS for a total sign area of 20 sq. ft. or less.

DOUBLE POST DETAIL

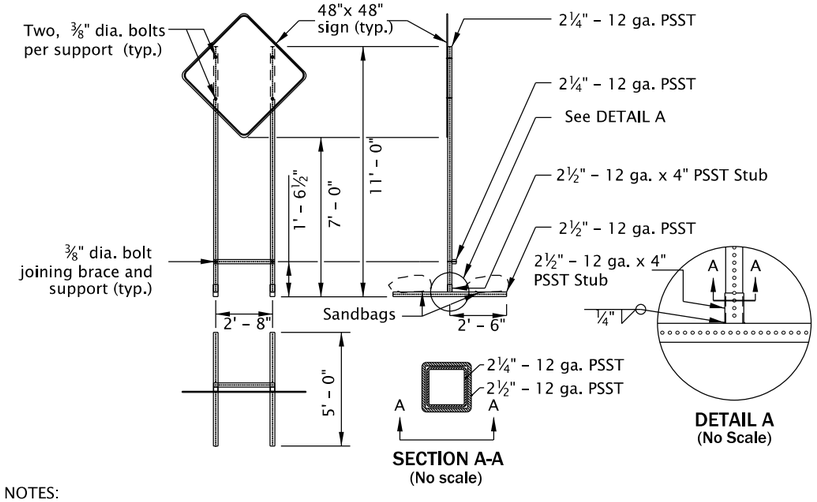

NOTES:

- Use PSST TSS's for a total sign area of 16 sq. ft. or less.
- All members shall have a minimum yield stress of 50 ksi.
- Galvanize steel according to ASTM A653 with coating designation G90. Remove Galvanizing from steel before welding. Repair Galvanizing according to ASTM A780.
- Use A325 Bolts or equivalent.
- 2¼" - 12 ga. PSST to extend entire length inside of the 2½" - 12 ga. x 4" PSST Stub.
- Do not use bolt to secure 2¼" PSST inside of the 2½" - 12 ga. x 4" PSST Stub.
- Weld steel according to American Welding Society (AWS) D.1.1.

PERFORATED STEEL SQUARE TUBE (PSST) DETAIL

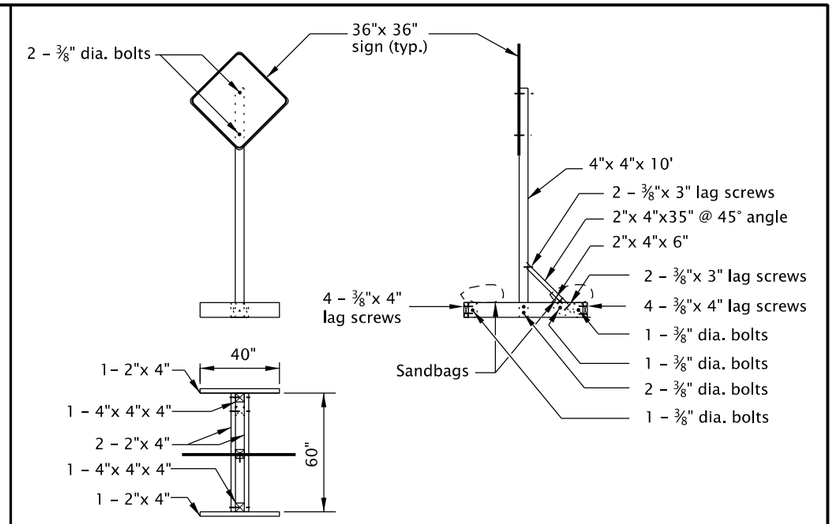

NOTES:

- Use Single Post TSS for a total sign area of 12 sq. ft. or less.
- Use Single Post TSS for mounting "Business Access" (CG20-11) signs. Do not mount signs on Type II or III Barricades.

SINGLE POST DETAIL

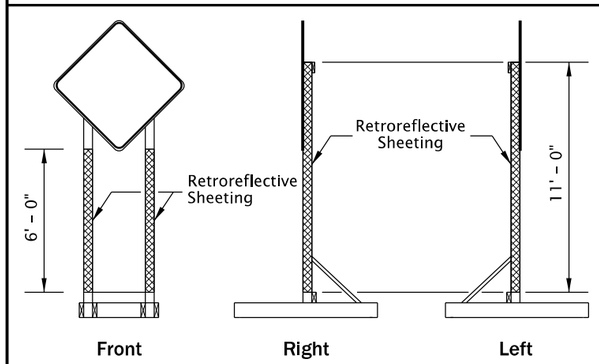

Double Post

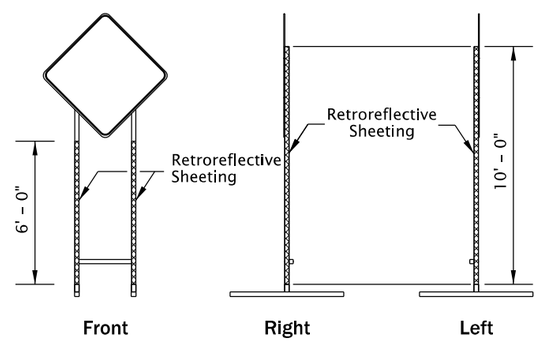

Perforated Steel Square Tube (PSST)

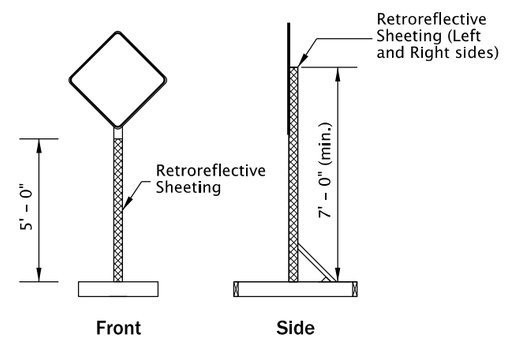

Single Post

TEMPORARY SIGN SUPPORT GENERAL NOTES:

- Do not tip over TSS at any time.
- Do not locate TSS's in locations that block pedestrian or bicycle traffic.
- For wooden TSS's, use either Douglas Fir or Hem Fir, which is surfaced four sides (S4S) and free of heart center (FOHC).
- See "Temporary Sign Placement" detail on TM822 for sign installation heights.
- Do not place or stack ballast more than 24" above the ground.
- When sign is inconsistent with current work zone conditions, cover sign: or turn sign 90 degrees away from approaching traffic. Remove TSS from roadway when signing is not needed for more than 3 days.
- Place a minimum of 50 lbs of sandbags on each of the four TSS supports legs. (25 lb. max per bag) (min. 100 lbs per side of each TSS).
- See Dwg. No. TM204 for flag board mounting detail.

NOTES:

- Apply fluorescent orange, ANSI Type VIII or IX retroreflective sheeting to TSS posts, as shown, for all temporary signs, except "STOP" and "DO NOT ENTER". For "STOP" and "DO NOT ENTER" signs, used red ANSI Type III or IV retroreflective sheeting on the TSS posts.
- Apply sign post retroreflectivity to each TSS post facing front; and to the left and right sides of the TSS, as shown. Use 3" wide sheeting for wood post TSS's. Use 2" wide sheeting for PSST TSS's.
- Sheeting may be applied directly to post material; or applied to a rigid, lightweight substrate, then securely attached to the posts.

SIGN POST REFLECTIVE SHEETING PLACEMENT

CALC. BOOK NO. N/A

SDR DATE 01-JUL-2020

NOTE: All material and workmanship shall be in accordance with the current Oregon Standard Specifications

The selection and use of this Standard Drawing, while designed in accordance with generally accepted engineering principles and practices, is the sole responsibility of the user and should not be used without consulting a Registered Professional Engineer.

OREGON STANDARD DRAWINGS

TEMPORARY SIGN SUPPORTS

2021

DATE	REVISION DESCRIPTION

Effective Date: December 1, 2020 - May 31, 2021

TM821

tm821.dgn 01-JUL-2020

TM821

NOTES:

- Do not block bicycle lanes, sidewalks, or TPAR's with sign supports. Maintain minimum widths for these facilities according TCP Design Manual, MUTCD, ADA, or as directed.
- To be accompanied by Dwg. Nos. TM670, TM671, TM687, TM688 & TM689.

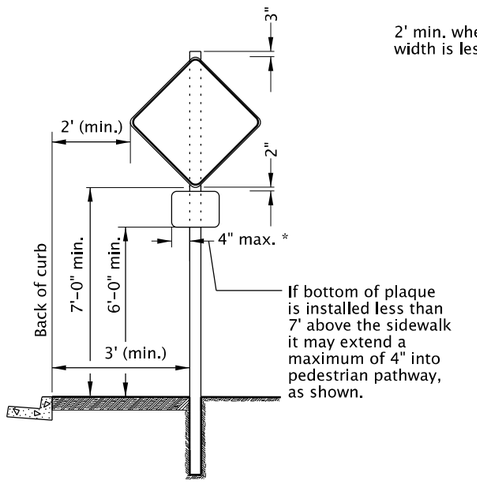

Urban Areas With Curb/Sidewalk

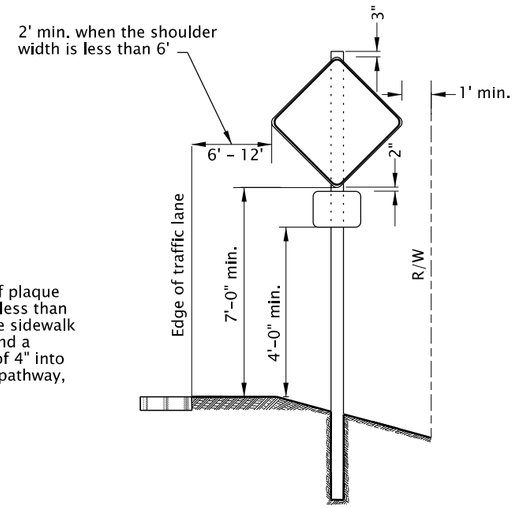

Rural Areas

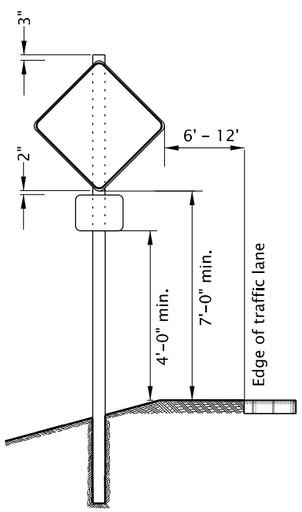

Divided Highway/Freeway Medians
No Curb/Sidewalk

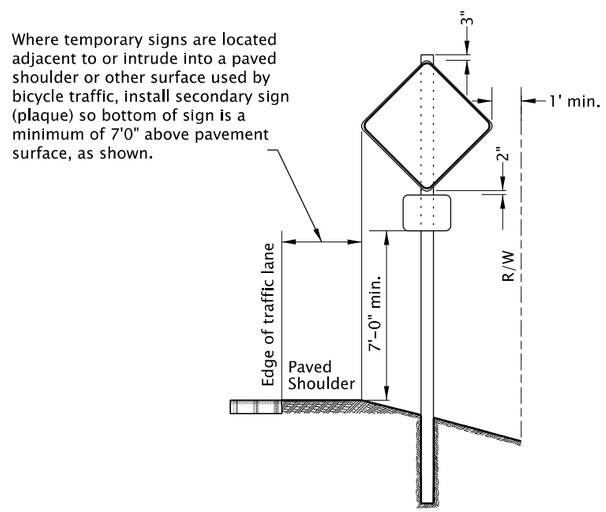

Rural or Urban Areas - Curb or No Curb
Bicycles On Shoulder

TEMPORARY SIGN PLACEMENT

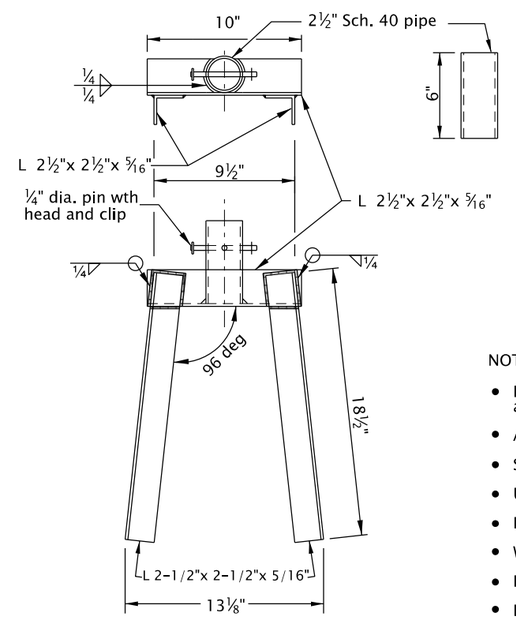

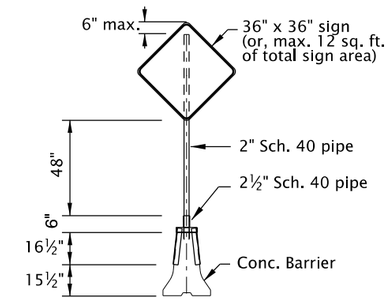

NOTES:

- Drill additional holes so sign can be rotated 90 degrees and pinned when not in use.
- All structural steel shall conform to ASTM A36.
- Support fits both 32" and 42" tall "F" barrier.
- Use for supporting a maximum 12 sq. ft. of total sign area.
- Place support at connection between two concrete barrier sections.
- Weld steel according to American Welding Society (AWS) D.1.1.
- Do not use clipped signs.
- Follow manufacturer recommendation when installing signs on barrier other than concrete.

CONCRETE BARRIER SIGN SUPPORT

CALC. BOOK NO. N/A

SDR DATE 01-JUL-2020

NOTE: All material and workmanship shall be in accordance with the current Oregon Standard Specifications

The selection and use of this Standard Drawing, while designed in accordance with generally accepted engineering principles and practices, is the sole responsibility of the user and should not be used without consulting a Registered Professional Engineer.

OREGON STANDARD DRAWINGS

TEMPORARY SIGN SUPPORTS

2021

DATE	REVISION DESCRIPTION

tm822.dgn 01-JUL-2020

TM822

Effective Date: December 1, 2020 - May 31, 2021

NOTES:

- DO NOT USE ON BRIDGE DECKS. Restrain barrier on bridge decks according to Bridge Design Manual. See Chapter 1.13.1.10
- Predrill pin holes for PCC pavement placement.
- Excavation height greater than 3 feet requires proper backslope based on angle of repose, or shoring as directed.

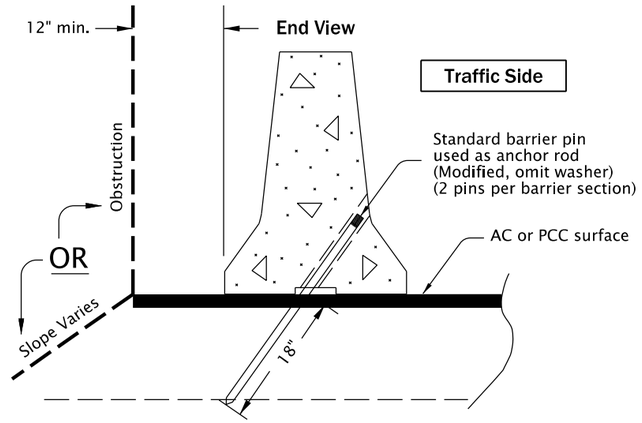

SECURING TEMPORARY CONCRETE BARRIER
(Shoulder Installation)

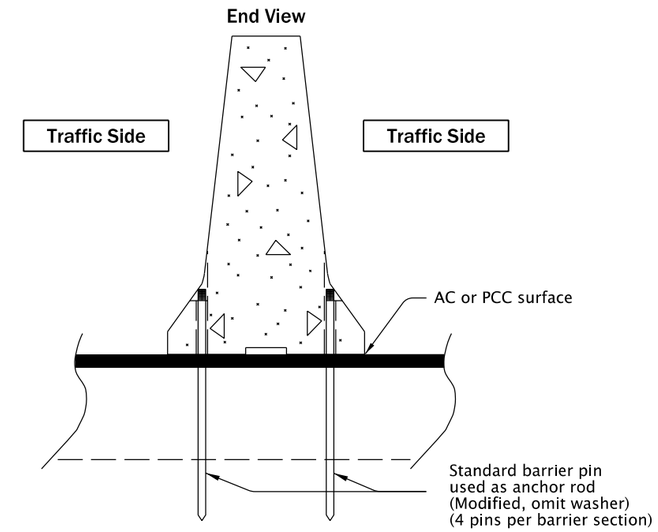

SECURING TEMPORARY TALL CONCRETE BARRIER
(Median Installation)

NOTES:

- CPPR and inlay existing rumble strips prior to staging traffic across the area. Common application is staging for freeway crossovers and lane shifts.
- Remove and replace existing striping as required.

UNDER CONSTRUCTION

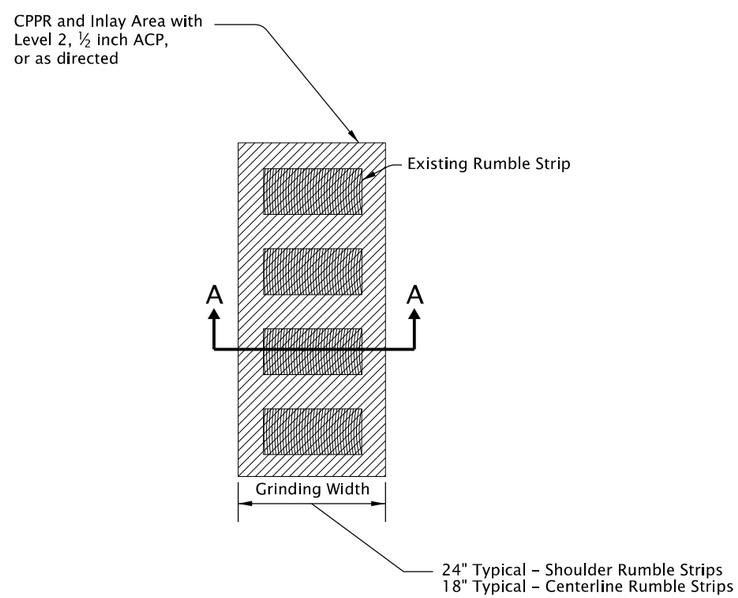

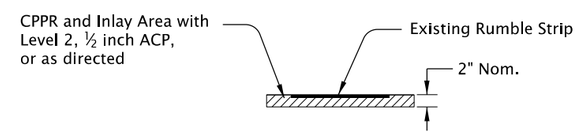

SECTION A-A

EXISTING RUMBLE STRIP REMOVAL

CALC. BOOK NO. N/A	SDR DATE 01-JUL-2020
The selection and use of this Standard Drawing, while designed in accordance with generally accepted engineering principles and practices, is the sole responsibility of the user and should not be used without consulting a Registered Professional Engineer.	NOTE: All material and workmanship shall be in accordance with the current Oregon Standard Specifications
	OREGON STANDARD DRAWINGS
	TEMPORARY CONCRETE BARRIER AND RUMBLE STRIP DETAILS
	2021

DATE	REVISION DESCRIPTION

tm830.dgn 01-JUL-2020

TM830

Effective Date: December 1, 2020 - May 31, 2021

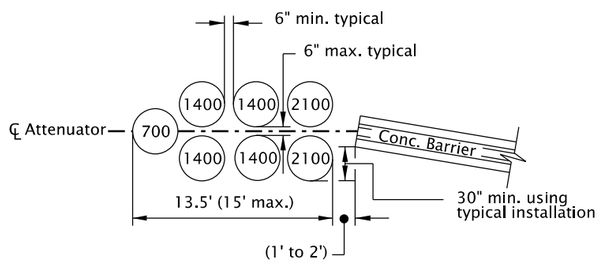

35 mph Layout

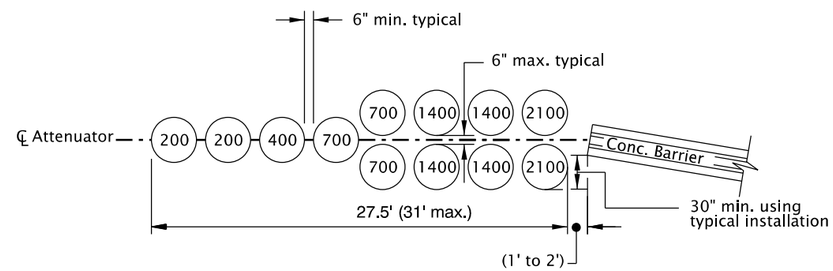

55 mph Layout

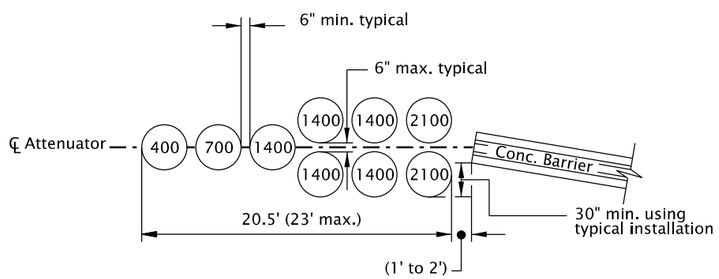

45 mph Layout

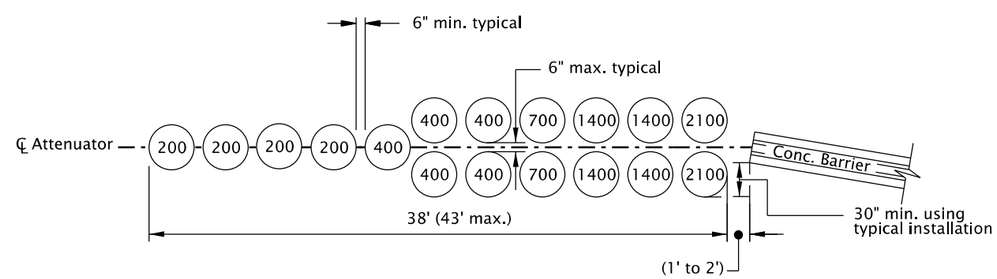

70 mph Layout

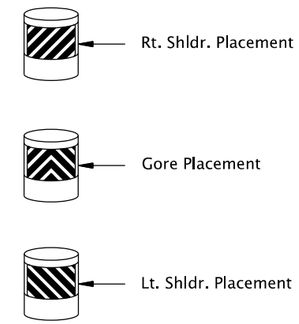

OBJECT MARKERS

GENERAL NOTES FOR ALL DETAILS:

- Use the appropriate layout configuration based on the pre-construction posted speed, as approved by the Engineer.
- For posted speeds not shown, use the next higher speed for attenuator selection.
- Use Temporary Impact Attenuator from the QPL. Typical outside diameter of each module is 36".
- Typical attenuator layouts shown. Layouts may vary by both speed and manufacturer. Number shown within each module is mass of dry sand in pounds.
- Final alignment of attenuator will be established in the field, as directed. At locations where vibrations and surface slopes may cause modules to shift, modules shall be anchored to prevent movement according to manufacturer's instructions and as approved by the engineer.
- The leading module of each attenuator shall be delineated with the appropriate object marker, as shown above.
- The object marker shall be 1/16" thick aluminum sheeting approx. 24" wide, 30" deep, and covered with yellow encapsulated lens sheeting. Black stripes 5" wide shall be silk-screened on the sheeting at a 45° slope and with 4" space between stripes.
- In cold climates, mix sand with 5% rock salt by weight to prevent freezing.
- To be accompanied by Dwg. No. TM833.

CALC. BOOK NO. _ _ _ _ N/A _ _ _ _

SDR DATE _ _ _ _ 01-JUL-2020 _ _ _ _

NOTE: All material and workmanship shall be in accordance with the current Oregon Standard Specifications

The selection and use of this Standard Drawing, while designed in accordance with generally accepted engineering principles and practices, is the sole responsibility of the user and should not be used without consulting a Registered Professional Engineer.

OREGON STANDARD DRAWINGS

TEMPORARY IMPACT ATTENUATORS

2021

DATE	REVISION DESCRIPTION

Single Barrier
TEMPORARY IMPACT ATTENUATOR LAYOUTS

tm831.dgn 01-JUL-2020

TM831

Effective Date: December 1, 2020 - May 31, 2021

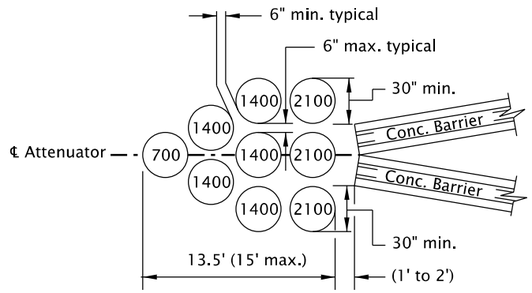

35 mph Layout

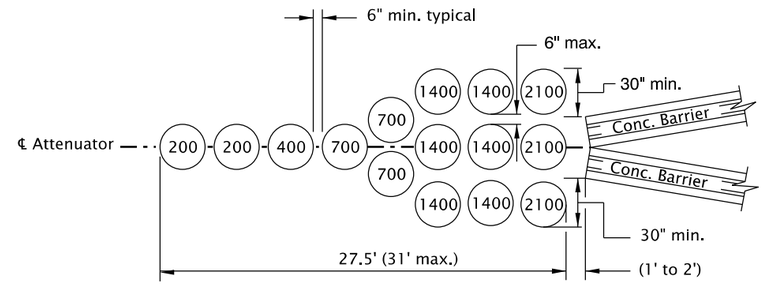

55 mph Layout

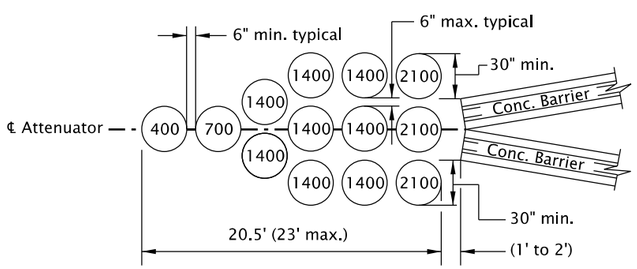

45 mph Layout

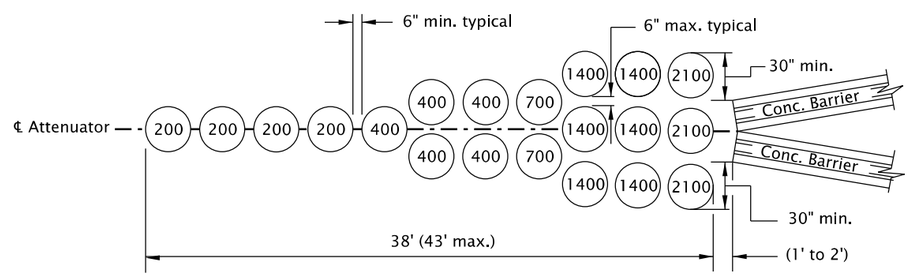

70 mph Layout

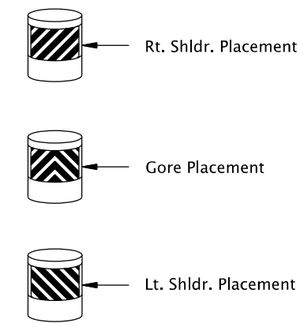

OBJECT MARKERS

GENERAL NOTES FOR ALL DETAILS:

- Use the appropriate layout configuration based on the pre-construction posted speed, as approved by the Engineer.
- For posted speeds not shown, use the next higher speed for attenuator selection.
- Use Temporary Impact Attenuator from the QPL. Typical outside diameter of each module is 36".
- Typical attenuator layouts shown. Layouts may vary by both speed and manufacturer. Number shown within each module is mass of dry sand in pounds.
- Final alignment of attenuator will be established in the field, as directed. At locations where vibrations and surface slopes may cause modules to shift, modules shall be anchored to prevent movement according to manufacturer's instructions and as approved by the engineer.
- The leading module of each attenuator shall be delineated with the appropriate object marker, as shown above.
- The object marker shall be 1/16" thick aluminum sheeting approx. 24" wide, 30" deep, and covered with yellow encapsulated lens sheeting. Black stripes 5" wide shall be silk-screened on the sheeting at a 45° slope and with 4" space between stripes.
- In cold climates, mix sand with 5% rock salt by weight to prevent freezing.
- To be accompanied by Dwg. No. TM833.

CALC. BOOK NO. N/A

SDR DATE 01-JUL-2020

NOTE: All material and workmanship shall be in accordance with the current Oregon Standard Specifications

The selection and use of this Standard Drawing, while designed in accordance with generally accepted engineering principles and practices, is the sole responsibility of the user and should not be used without consulting a Registered Professional Engineer.

OREGON STANDARD DRAWINGS

TEMPORARY IMPACT ATTENUATORS

2021

DATE	REVISION DESCRIPTION

Double Barrier
TEMPORARY IMPACT ATTENUATOR LAYOUTS

tm832.dgn 01-JUL-2020

TM832

Effective Date: December 1, 2020 - May 31, 2021

TM832

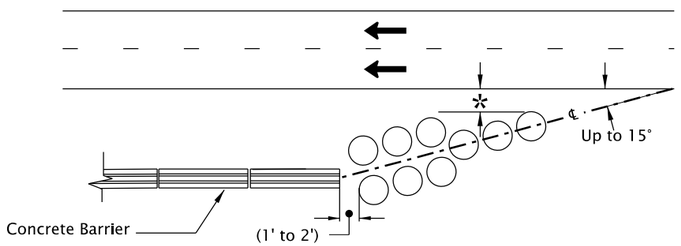

Divided Highway or One-Way Roadway
(Angled Installation)

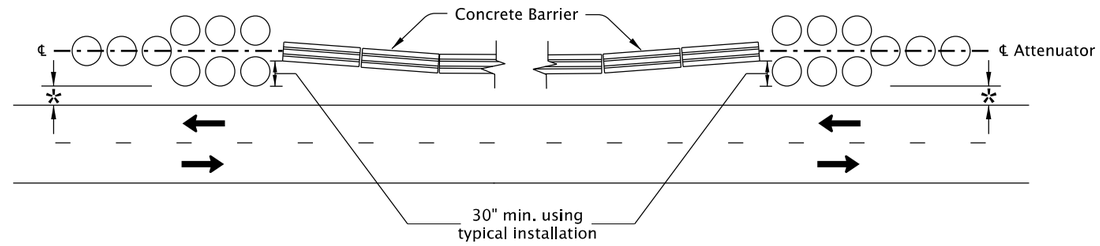

Two-Way Roadway
(Typical Installation)

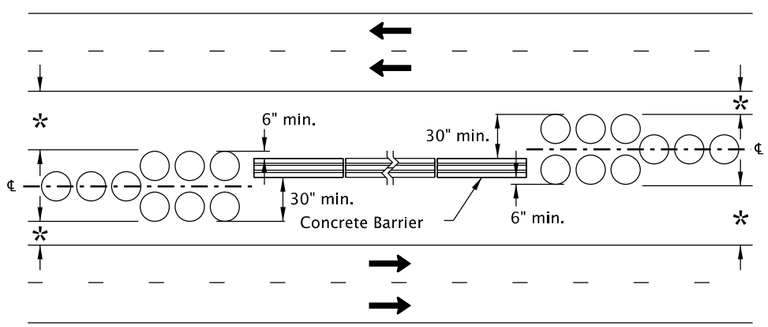

Divided Highway
(Typical Installation)

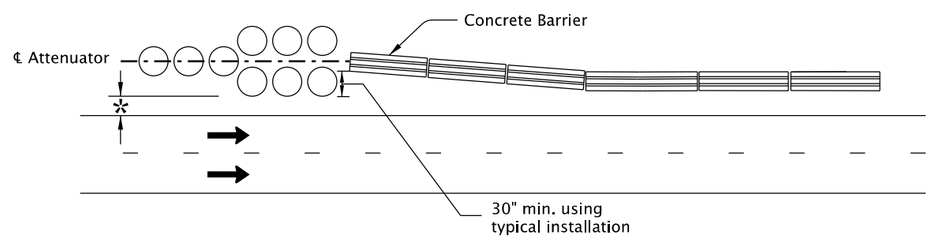

One-Way Roadway
(Typical Installation)

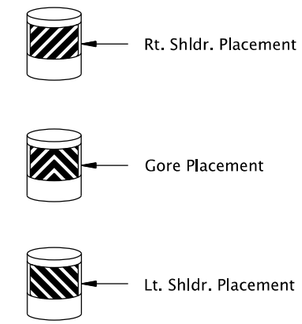

OBJECT MARKERS

GENERAL NOTES FOR ALL DETAILS:

- Use the appropriate layout configuration based on the pre-construction posted speed, as approved by the Engineer.
- Use Temporary Impact Attenuator from the QPL. Typical outside diameter of each module is 36".
- Attenuator layout shown is a typical layout. Layouts may vary by both speed and manufacturer.
- Divided or One-Way Attenuator layouts may be oriented toward oncoming traffic at angles up to 15°.
- Final alignment of attenuator will be established in the field, as directed. At locations where vibrations and surface slopes may cause modules to shift, modules shall be anchored to prevent movement according to manufacturer's instructions and as approved by the engineer.
- In cold climates, mix sand with 5% rock salt by weight to prevent freezing.

NOTES:

- Use the One-Way Roadway Typical Installation for each barrier terminal when the available width in median does not allow for the installation of the Divided Highway Typical Installation.

* Minimum 2', otherwise maximize the distance from the traveled way to the temporary impact attenuator.

Typical Installations
TEMPORARY IMPACT ATTENUATOR

CALC. BOOK NO. N/A

The selection and use of this Standard Drawing, while designed in accordance with generally accepted engineering principles and practices, is the sole responsibility of the user and should not be used without consulting a Registered Professional Engineer.

SDR DATE 01-JUL-2020

NOTE: All material and workmanship shall be in accordance with the current Oregon Standard Specifications

OREGON STANDARD DRAWINGS

TEMPORARY IMPACT ATTENUATORS

2021

DATE	REVISION DESCRIPTION

tm833.dgn 01-JUL-2020

TM833

Effective Date: December 1, 2020 - May 31, 2021

NOTES:
If closure point is less than 1500 ft. from nearest intersection, use a "ROAD CLOSED TO THRU TRAFFIC" (R11-4)sign in place of the "ROAD CLOSED XX MILES AHEAD" sign.

* If the roadway width (between edges of pavement) at the closure point exceeds 24 feet, place one additional 8' B(III)C barricade for every 12 feet of additional roadway width.

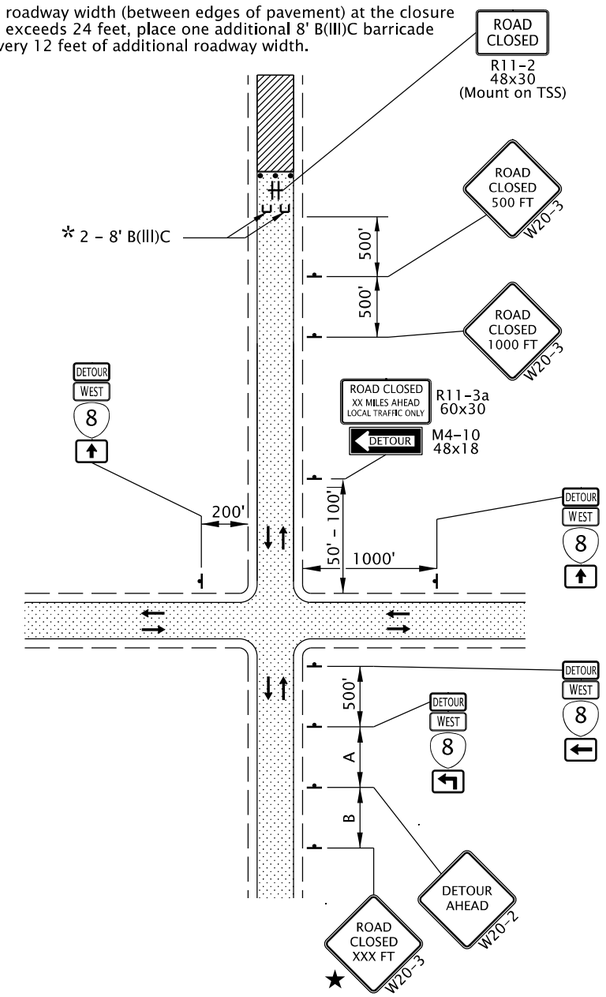

TYPICAL ROAD CLOSURE WITH DETOUR

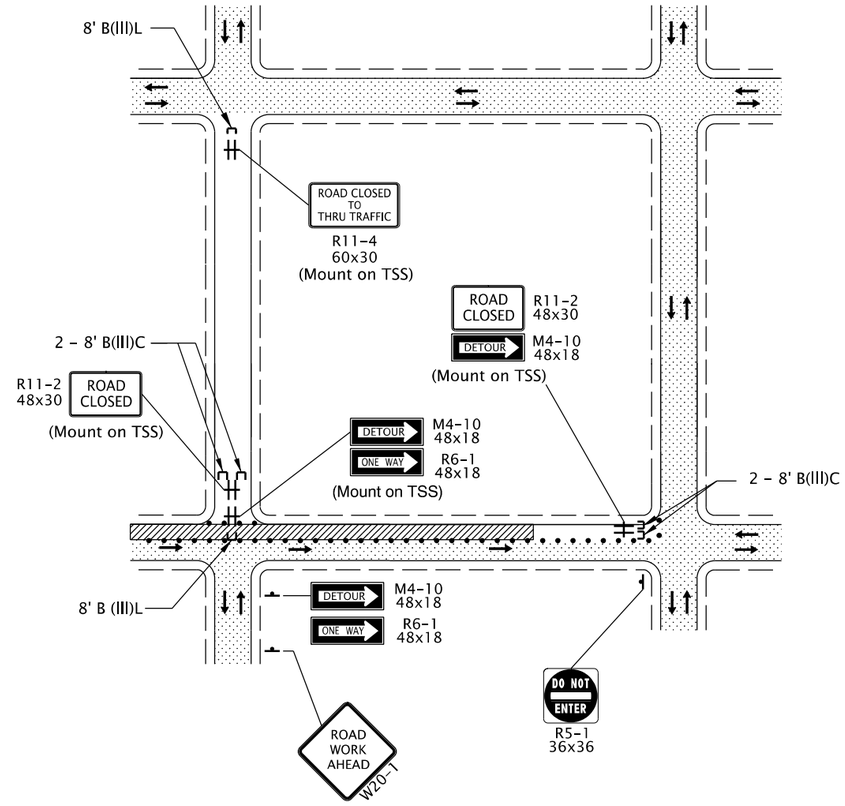

TYPICAL PARTIAL ROAD CLOSURE

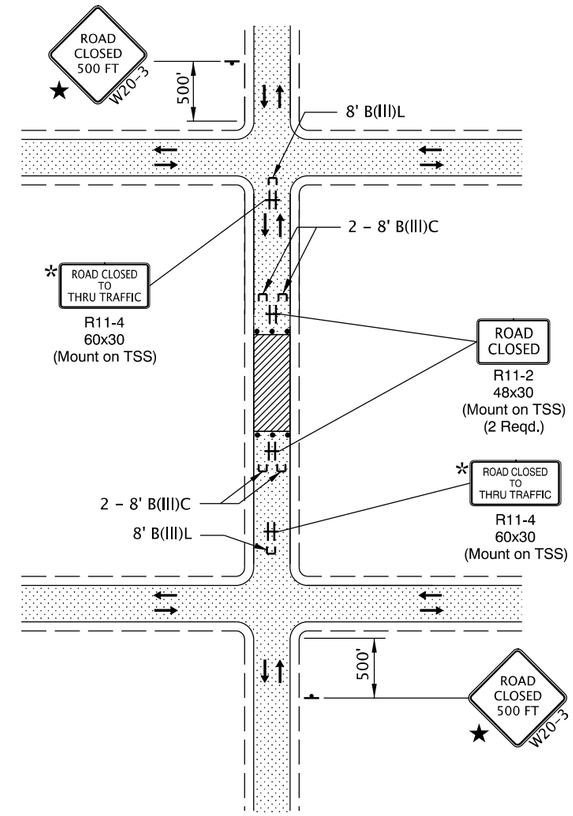

NOTE:
* If accesses exist between intersection and point of closure, install "ROAD CLOSED TO THRU TRAFFIC" sign as shown.

TYPICAL ROAD CLOSURE

GENERAL NOTES FOR ALL DETAILS:

★ A "Street Name" rider may be used to enhance Road Closure signing; or provide a project specific design; or, as shown in the traffic control plan.

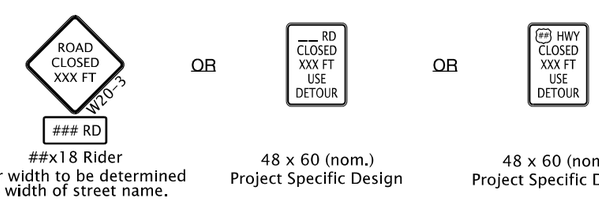

##x18 Rider
Rider width to be determined by width of street name.

48 x 60 (nom.)
Project Specific Design

48 x 60 (nom.)
Project Specific Design

- Use a minimum of two Type III barricades for a road closure. For roads ≥ 36' wide between curbs or edge of pavement, use a minimum of three Type III barricades for the closure point.
- For full road closures, the C or LR barricade may be used.
- Place additional signing as directed.
- To determine sign spacing A, B, & C, use the "TRAFFIC CONTROL DEVICES (TCD) SPACING TABLE" on Dwg. TM800.
- To be accompanied by Dwg. Nos.TM820 & TM821.

• • • • • 28" Tubular Markers See TCD Spacing Table on TM800 for max. spacing.

UNDER TRAFFIC

UNDER CONSTRUCTION

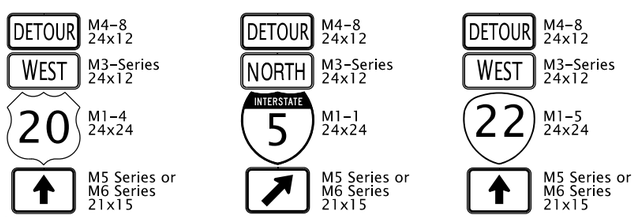

NOTE:
- When detour routes overlap, each Route Shield will include a seperate cardinal direction, detour, and directional arrow auxiliary sign assembly.

TYPICAL TRAILBLAZER ASSEMBLY

CALC. BOOK NO. N/A

SDR DATE 01-JUL-2020

NOTE: All material and workmanship shall be in accordance with the current Oregon Standard Specifications

The selection and use of this Standard Drawing, while designed in accordance with generally accepted engineering principles and practices, is the sole responsibility of the user and should not be used without consulting a Registered Professional Engineer.

OREGON STANDARD DRAWINGS

CLOSURE DETAILS

2021

DATE	REVISION DESCRIPTION

tm840.dgn 01-JUL-2020

TM840

Effective Date: December 1, 2020 - May 31, 2021

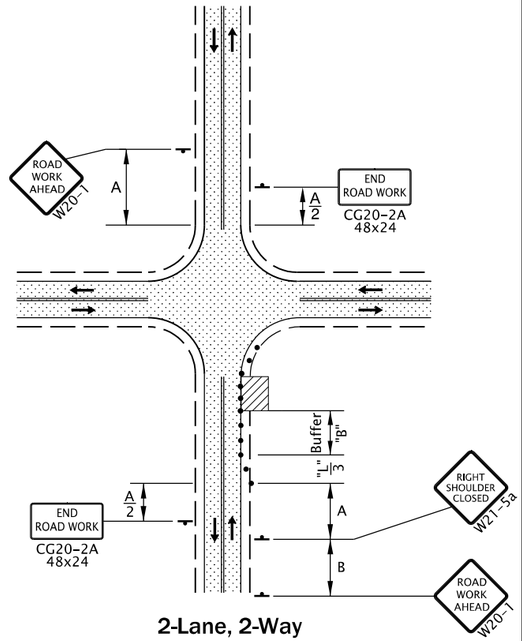

2-Lane, 2-Way
SHOULDER CLOSURE

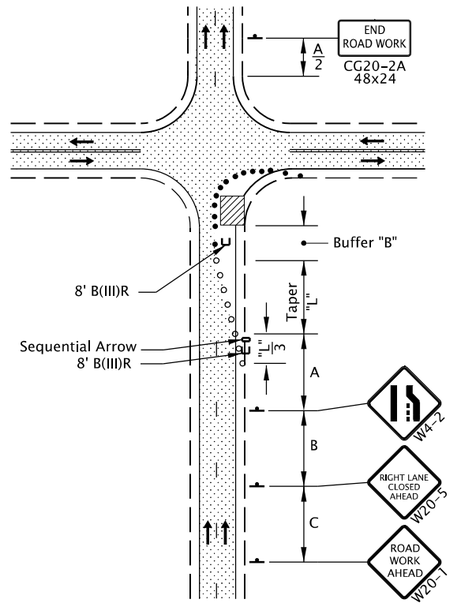

2-LANE, 1-WAY
RIGHT LANE CLOSURE

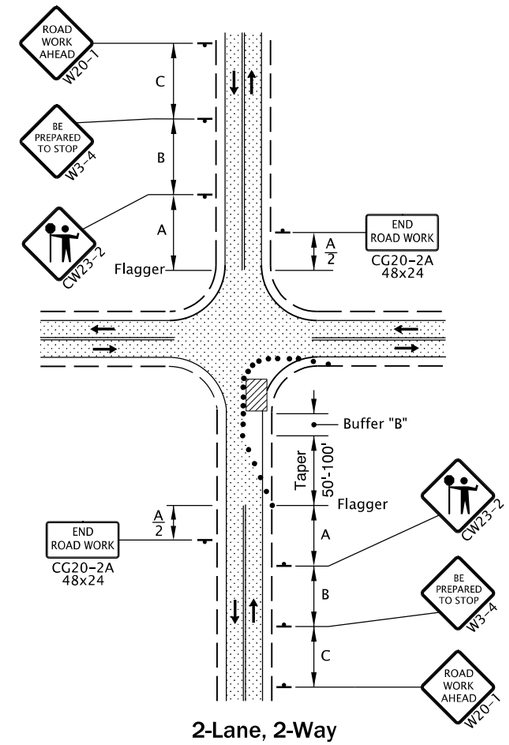

2-Lane, 2-Way
ONE LANE CLOSURE

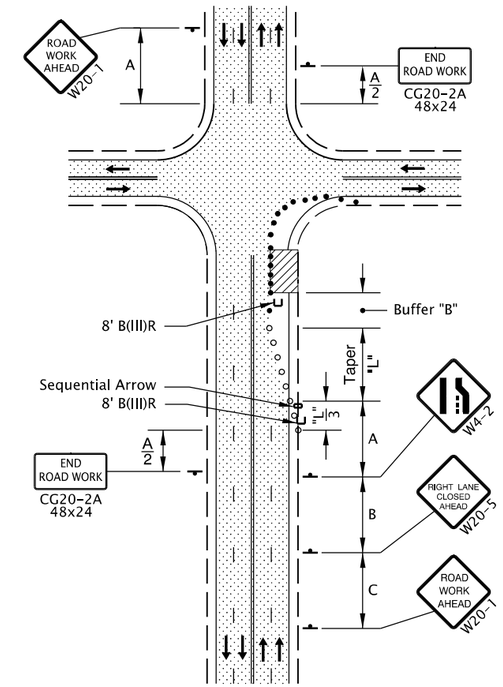

4-Lane, 2-Way
RIGHT LANE CLOSURE, NEAR SIDE

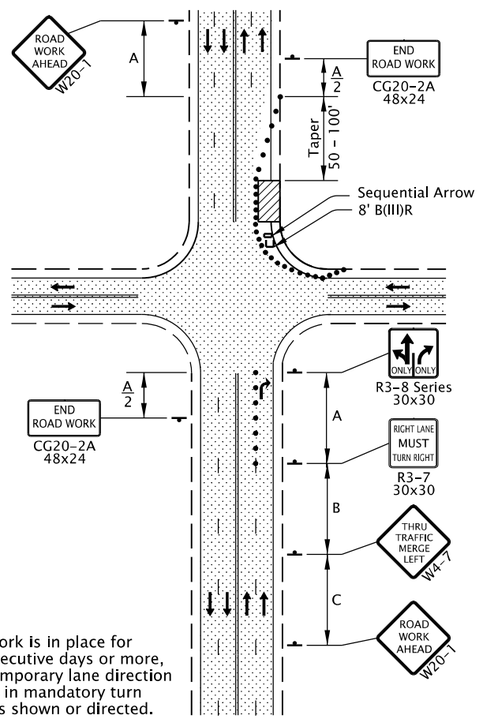

NOTES:

- When work is in place for 14 consecutive days or more, place temporary lane direction legends in mandatory turn lanes, as shown or directed.

4-Lane, 2-Way
RIGHT LANE CLOSURE, FAR SIDE

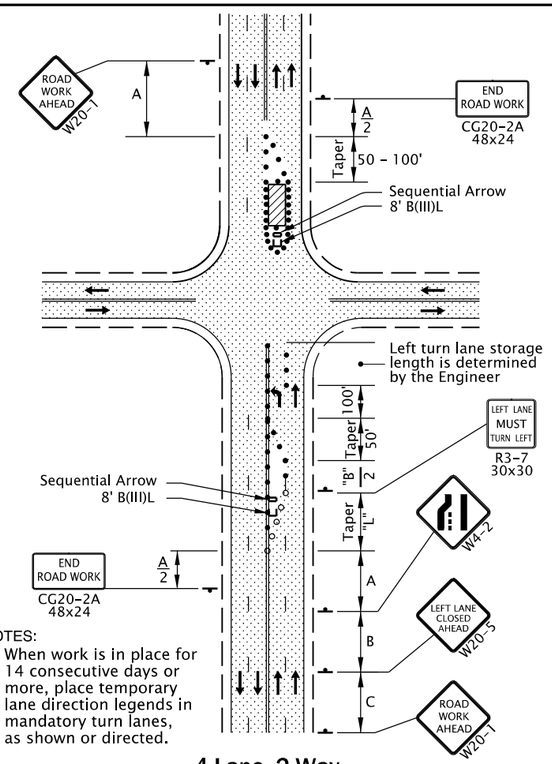

NOTES:

- When work is in place for 14 consecutive days or more, place temporary lane direction legends in mandatory turn lanes, as shown or directed.

4-Lane, 2-Way
LEFT LANE CLOSURE, FAR SIDE

GENERAL NOTES FOR ALL DETAILS:

- Additional Traffic Control Measures (TCM) may be required for all legs of the intersection.
- The "FLAGGER" (CW23-2) symbol sign shall be used only in conjunction with the "BE PREPARED TO STOP" (W3-4) sign.
- To determine Taper Length ("L") and Buffer Length ("B"), use the "MINIMUM LENGTHS TABLE" on Dwg. TM800.
- For left lane or shoulder work, place TCD to close left lane or shoulder. Use "LEFT LANE CLOSED AHEAD" (W20-5) sign, "LEFT LANE ENDS" (W4-2L) symbol sign, or "LEFT SHOULDER CLOSED" (W21-5a) sign, where applicable.
- To determine sign spacing A, B, and C, use "TRAFFIC CONTROL DEVICES (TCD) SPACING TABLE" on Dwg. TM800.
- When a through road intersects within the work zone, place a "ROAD WORK AHEAD" (W20-1) sign in advance of the intersection at sign spacing A.
- Tubular markers may be used in lane closure tapers where posted speed is 40 mph or less.
- Where shoulder width is limited, Sequential Arrow may be placed within the lane closure taper.
- Place channelizing devices around intersection radii, business accesses and driveways at 10' spacing.
- Install a "BICYCLES ON ROADWAY" (CW11-1) sign in advance of the closure when a bike lane is closed, or when the shoulder is closed and bikes are expected.
- To be accompanied by Dwg. Nos. TM820, TM821 & TM840.

• • • • • 28" Tubular Markers
See TCD Spacing Table on TM800 for max. spacing.

○ ○ ○ ○ ○ Temp. Plastic Drums
See TCD Spacing Table on TM800 for max. spacing.

UNDER TRAFFIC

UNDER CONSTRUCTION

CALC. BOOK NO. N/A

SDR DATE 01-JUL-2020

NOTE: All material and workmanship shall be in accordance with the current Oregon Standard Specifications

The selection and use of this Standard Drawing, while designed in accordance with generally accepted engineering principles and practices, is the sole responsibility of the user and should not be used without consulting a Registered Professional Engineer.

OREGON STANDARD DRAWINGS

INTERSECTION WORK ZONE DETAILS

2021

DATE	REVISION DESCRIPTION

tm841.dgn 01-JUL-2020

TM841

Effective Date: December 1, 2020 - May 31, 2021

tm842.dgn 01-JUL-2020

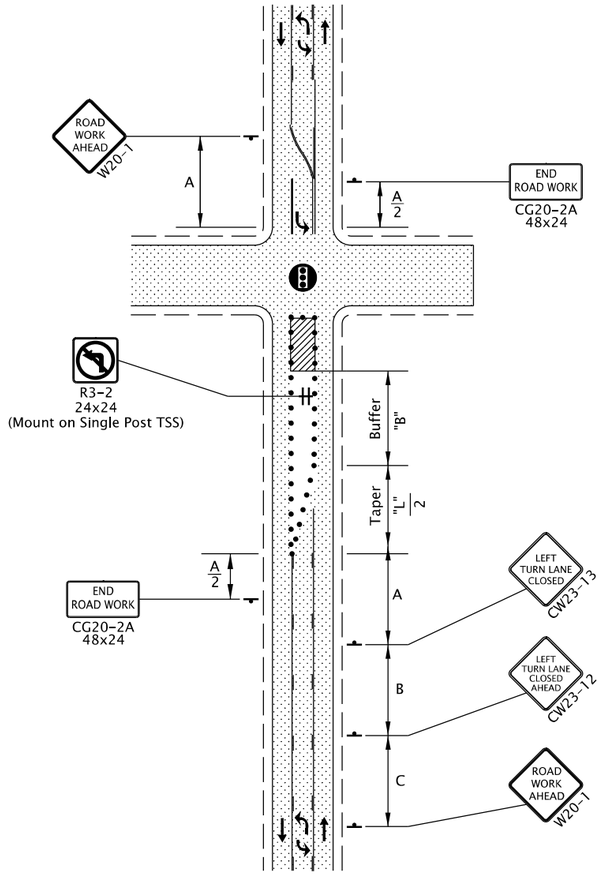

2-Lane, 2-Way Roadway With Left Turn Median

LEFT TURN MEDIAN CLOSURE

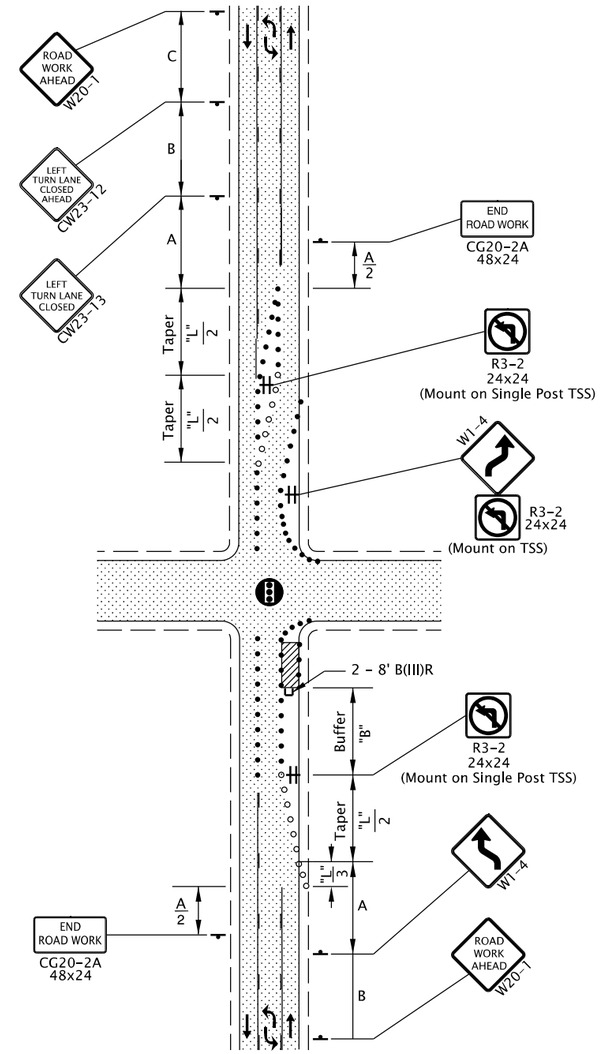

2-Lane, 2-Way Roadway With Left Turn Median

RIGHT LANE CLOSURE, NEAR SIDE

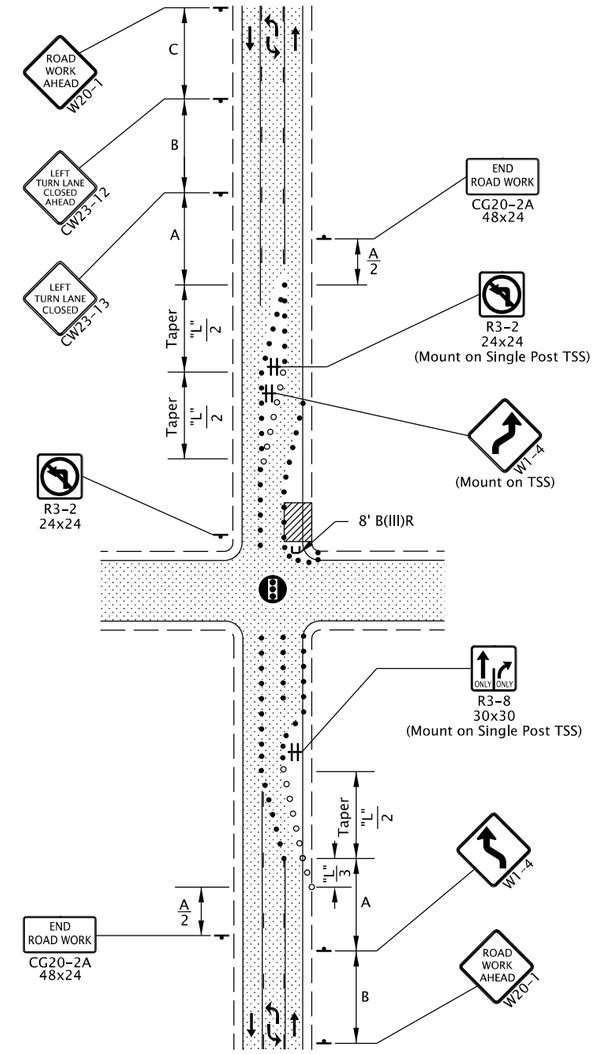

2-Lane, 2-Way Roadway With Left Turn Median

RIGHT LANE CLOSURE, FAR SIDE

GENERAL NOTES FOR ALL DETAILS:

- Additional Traffic Control Measures (TCM) may be required for all legs of the intersection.
- To determine Taper Length ("L") and Buffer Length ("B") shown on this sheet, use the "MINIMUM LENGTHS TABLE" on Dwg. TM800.
- Taper length of "L" for through lane shifting tapers may be used for higher speed roads.
- Taper length of "L"/2 for center turn lane closure may be used in areas with a high number of accesses within the work zone.
- When a through road intersects within the work zone, place a "ROAD WORK AHEAD" (W20-1) sign in advance of the intersection at sign spacing A.
- To determine sign spacing A, B, and C, use "TRAFFIC CONTROL DEVICES (TCD) SPACING TABLE" on Dwg. TM800.
- Place channelizing devices around intersection radii, business accesses, and driveways at 10' spacing.
- Tubular markers may be used in lane closure tapers where the posted speed is 40 mph or less.
- Install a "BICYCLES ON ROADWAY" (CW11-1) sign in advance of the closure when a bike lane is closed, or when the shoulder is closed and bikes are expected.
- Signal timing adjustments determined by Engineer.
- To be accompanied by Dwg. Nos. TM820 & TM821.

Signal

28" Tubular Markers
See TCD Spacing Table on TM800 for max. spacing

Temp. Plastic Drums
See TCD Spacing Table on TM800 for max. spacing

UNDER TRAFFIC

UNDER CONSTRUCTION

CALC. BOOK NO. N/A

SDR DATE 01-JUL-2020

NOTE: All material and workmanship shall be in accordance with the current Oregon Standard Specifications

The selection and use of this Standard Drawing, while designed in accordance with generally accepted engineering principles and practices, is the sole responsibility of the user and should not be used without consulting a Registered Professional Engineer.

OREGON STANDARD DRAWINGS

SIGNALIZED INTERSECTION DETAILS

2021

DATE	REVISION DESCRIPTION

Effective Date: December 1, 2020 - May 31, 2021

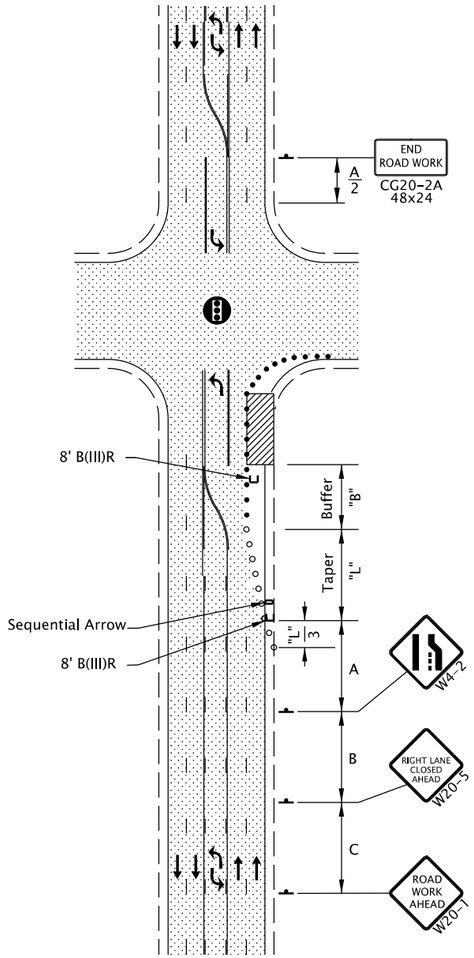

4-Lane, 2-Way Roadway With Left Turn Median
RIGHT LANE CLOSURE

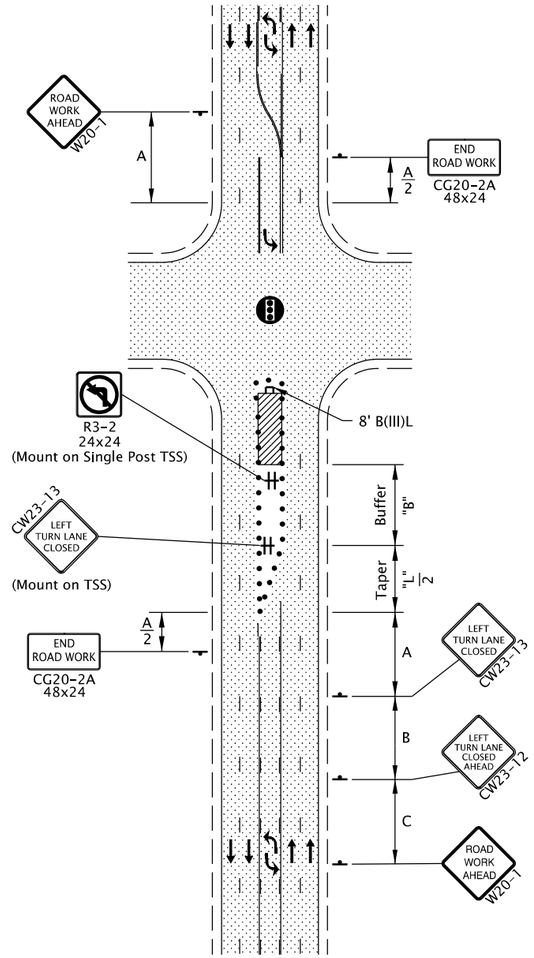

4-Lane, 2-Way Roadway With Left Turn Median
LEFT TURN MEDIAN CLOSURE

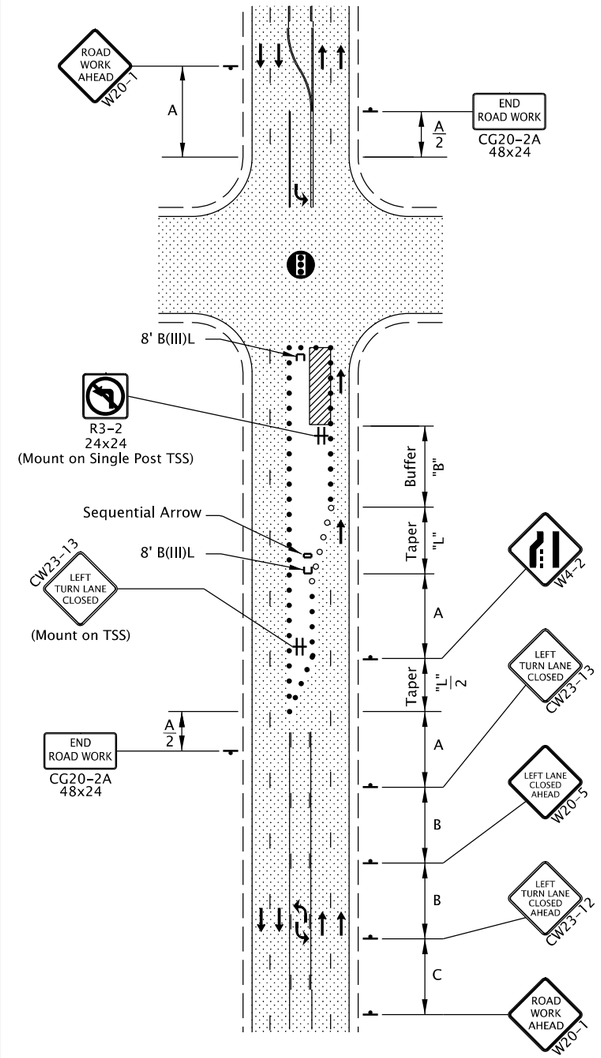

4-Lane, 2-Way Roadway With Left Turn Median
LEFT TURN MEDIAN AND LEFT LANE CLOSURE

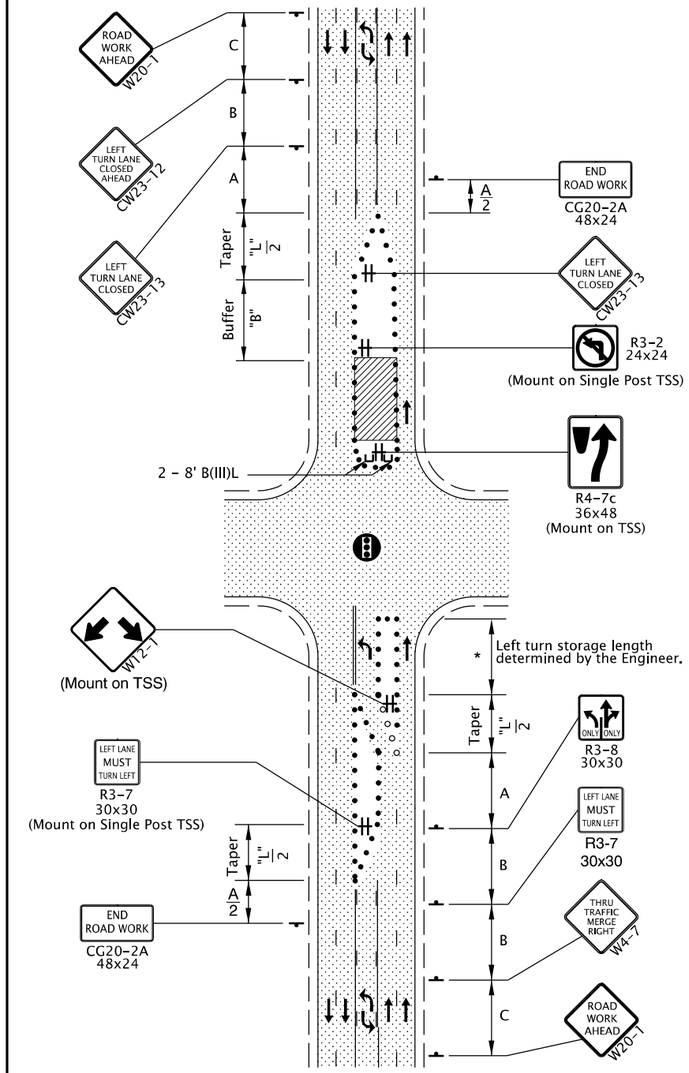

4-Lane, 2-Way Roadway With Left Turn Median
LEFT TURN MEDIAN & LEFT LANE CLOSURE, FAR SIDE

GENERAL NOTES FOR ALL DETAILS:

- Additional Traffic Control Measures (TCM) may be required for all legs of the intersection.
- To determine Taper Length ("L") and Buffer Length ("B") shown on this sheet, use the "MIMIMUM LENGTHS TABLE" on Dwg. TM800.
- When a through road intersects within the work zone, place a "ROAD WORK AHEAD" (W20-1) sign in advance of the intersection at sign spacing A.
- To determine sign spacing A, B, and C, use "TRAFFIC CONTROL DEVICES (TCD) SPACING TABLE" on Dwg. TM800.
- Tubular markers may be used in lane closure tapers where the posted speed is 40 mph or less.
- Taper Length of "L" for the through-lane shifting tapers may be used for higher speed roads.
- Taper Length of "L"/2 for center turn lane closure may be used in areas with high number of accesses within the work zone.
- Place channelizing devices around intersection radii, business accesses and driveways at 10' spacing.
- Install a "BICYCLES ON ROADWAY" (CW11-1) sign in advance of the closure when a bike lane is closed, or when the shoulder is closed and bikes are expected.
- Signal timing adjustments determined by the Engineer.
- To be accompanied by Dwg. Nos. TM820 & TM821.

Signal

28" Tubular Markers
See TCD Spacing Table on TM800 for max. spacing.

Temp. Plastic Drums
See TCD Spacing Table on TM800 for max. spacing.

UNDER TRAFFIC

UNDER CONSTRUCTION

CALC. BOOK NO. N/A

The selection and use of this Standard Drawing, while designed in accordance with generally accepted engineering principles and practices, is the sole responsibility of the user and should not be used without consulting a Registered Professional Engineer.

SDR DATE 01-JUL-2020

NOTE: All material and workmanship shall be in accordance with the current Oregon Standard Specifications

OREGON STANDARD DRAWINGS

MULTI-LANE SIGNALIZED INTERSECTION DETAILS

2021

DATE	REVISION DESCRIPTION

TM843

Effective Date: December 1, 2020 - May 31, 2021

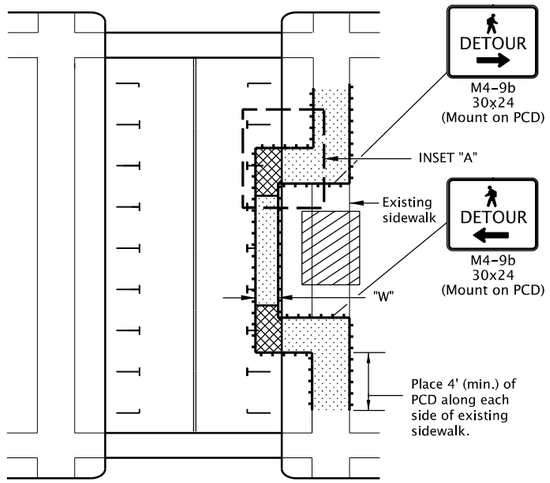

Within Roadway
SIDEWALK DIVERSION

NOTES:

- Place or construct temp. sidewalk ramp, as needed.
- For roadways with a pre-construction posted speed of 40 mph or less.
- See inset "A" for Temp. Sidewalk Ramp details.
- "W" = 60", or, where 60" width cannot be maintained through the entire route, provide 48" min. width with 60" x 60" passing spaces every 200 ft.
- Use temporary ADA compliant surfaces to cross planter strips or other non-traversable surfaces.

NOTES:

- Ramp size will vary. Ramp must meet ADA requirements incl. max design grade of 7.5% and max design cross slope of 1.5%.

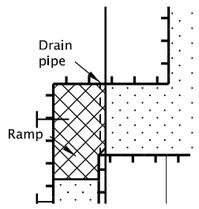

INSET "A"
(Temp. Sidewalk Ramp)

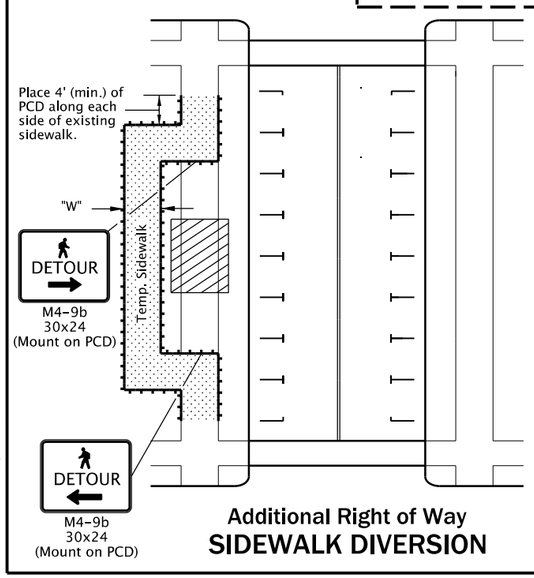

Additional Right of Way
SIDEWALK DIVERSION

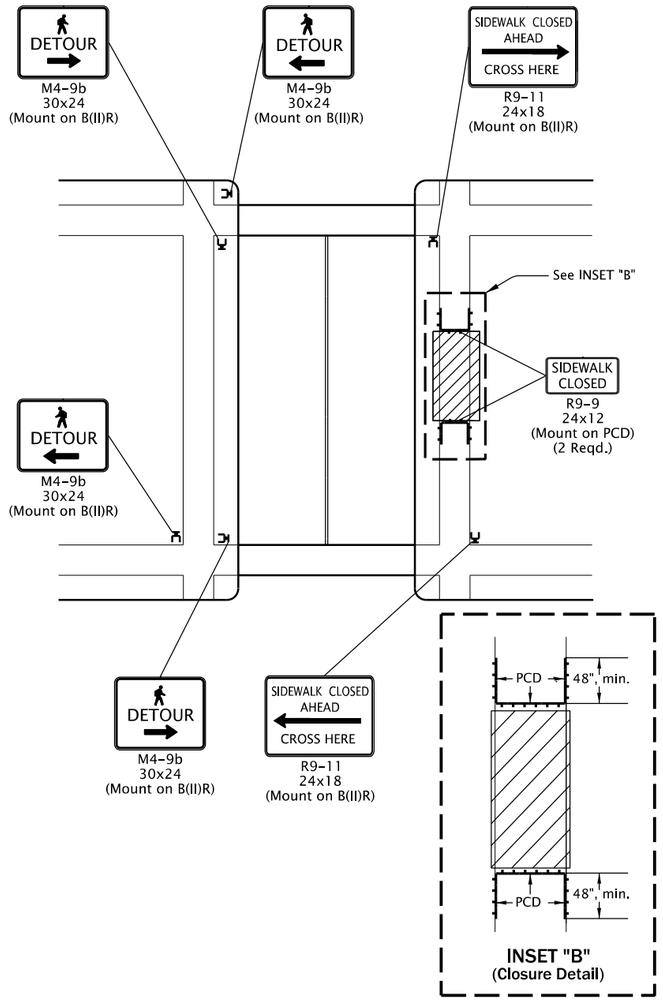

INSET "B"
(Closure Detail)

SIDEWALK CLOSURE, MIDBLOCK

NOTE:

- Limit work to one corner at a time to minimize pedestrian distruption and detour length.

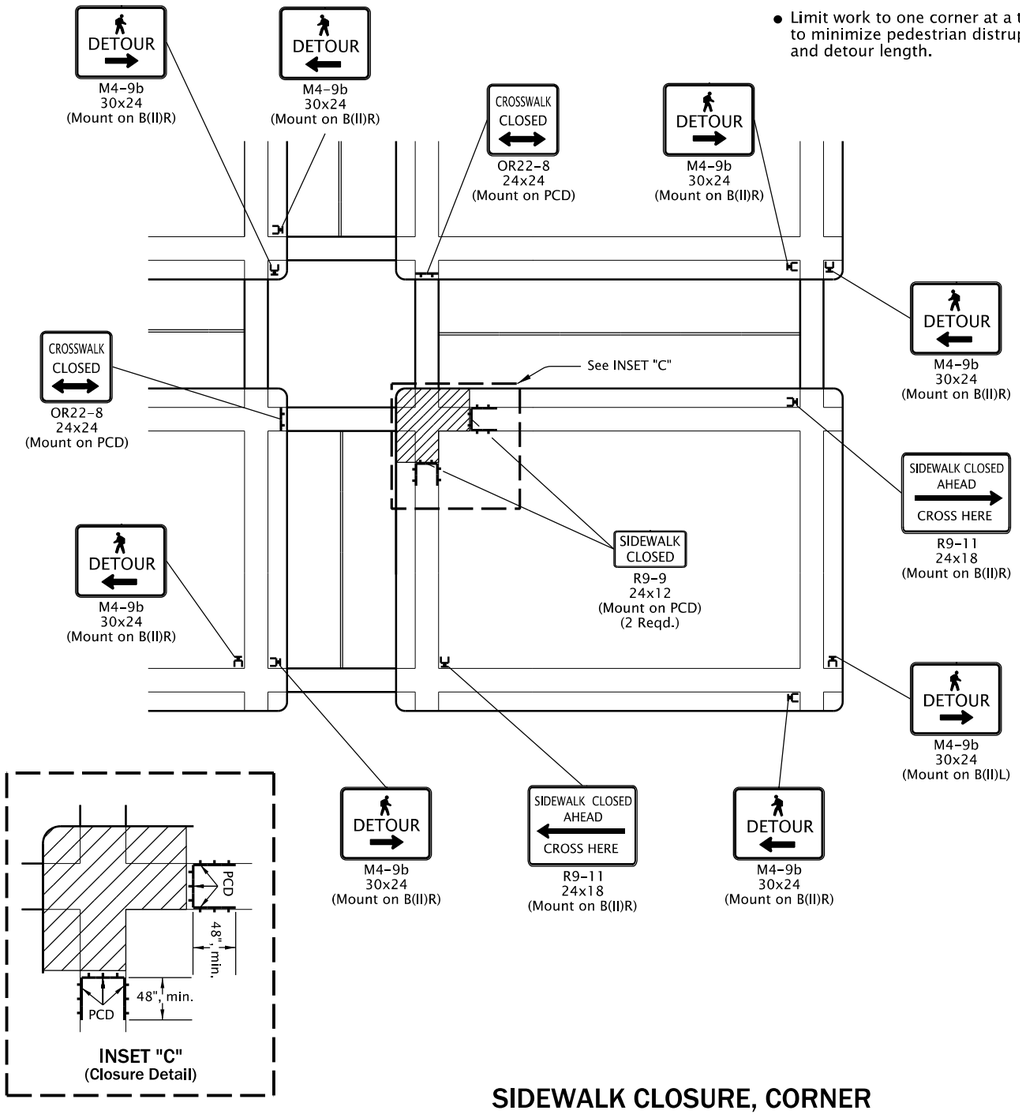

INSET "C"
(Closure Detail)

SIDEWALK CLOSURE, CORNER

GENERAL NOTES FOR ALL DETAILS:

- When closing or relocating crosswalks or other pedestrian facilities provide ADA compliant facilities. Include accessibility features consistent with existing pedestrian facilities by providing adequate slope transitions and surfacing.
- Provide non-slip, 60 inch minimum wide surface through entire pedestrian route. If not possible, provide 48" min. width with 60" x 60" passing spaces every 200 feet along the route.
- Only TCD for pedestrians are shown. Other devices may be necessary to control vehicular traffic.
- Stage work, as necessary, to provide a temporary pedestrian access route at all times. For roadways with no available detours, maintain one open sidewalk at all times.
- Minimize pedestrian out-of-direction travel.
- To be accompanied by Dwg. Nos. TM820 & TM821.

UNDER PEDESTRIAN TRAFFIC

UNDER CONSTRUCTION

PEDESTRIAN CHANNELIZING DEVICE (PCD)

CALC. BOOK NO. N/A

SDR DATE 01-JUL-2020

NOTE: All material and workmanship shall be in accordance with the current Oregon Standard Specifications

The selection and use of this Standard Drawing, while designed in accordance with generally accepted engineering principles and practices, is the sole responsibility of the user and should not be used without consulting a Registered Professional Engineer.

OREGON STANDARD DRAWINGS

TEMPORARY PEDESTRIAN ACCESSIBLE ROUTES

2021

DATE	REVISION DESCRIPTION

tm844.dgn 01-JUL-2020

TM844

Effective Date: December 1, 2020 - May 31, 2021

NOTE:

- Continue "LOOSE GRAVEL" (CW8-7a) and "DO NOT PASS" (R4-1) signing throughout the area at spacing shown.
- Use advisory speed "XX", 15 mph less than the pre-construction posted speed, or as directed. "XX MPH" placard shall not exceed a posted speed of 35 mph.

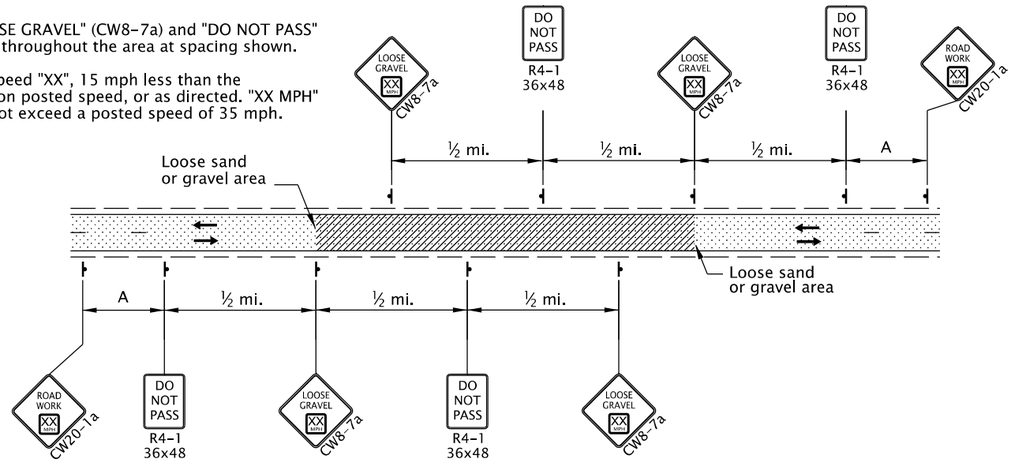

2-Lane, 2-Way Roadway
LOOSE GRAVEL IN ROADWAY SIGNING

NOTE:

- Continue "ABRUPT EDGE" (CW21-(7,9)) and "DO NOT PASS" (R4-1) signing throughout the area at spacing shown.

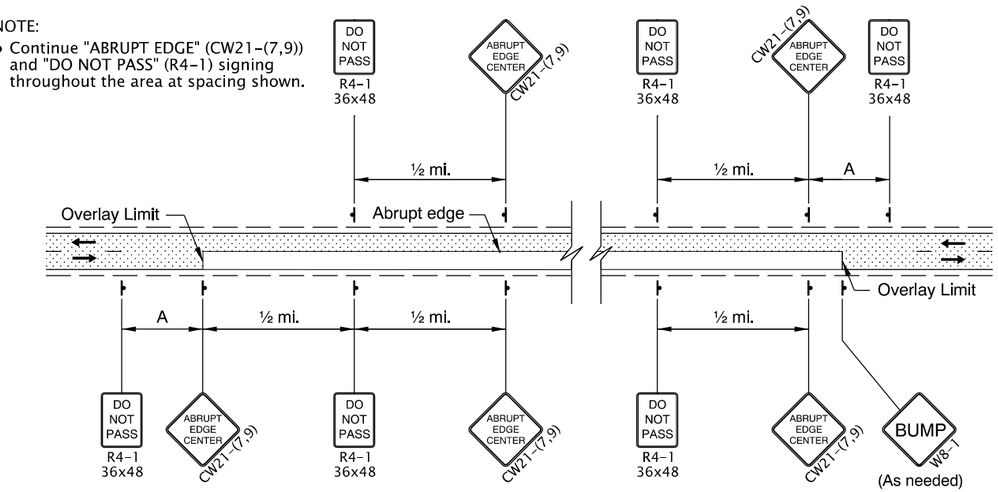

2-Lane, 2-Way Roadway
OVERLAY AREA SIGNING

NOTES:

- Place Advance Flagger and additional signing when traffic queues extend beyond initial warning signing OR when sight distance is restricted.
- Relocate initial "ROAD WORK AHEAD" (W20-1) sign in advance of additional "BE PREPARED TO STOP" (W3-4) and Flagger Ahead (CW23-2) signs, as shown.
- Place additional Tubular Markers for Flagger and Advance Flagger Stations according to FLAGGER STATION DELINEATION detail.

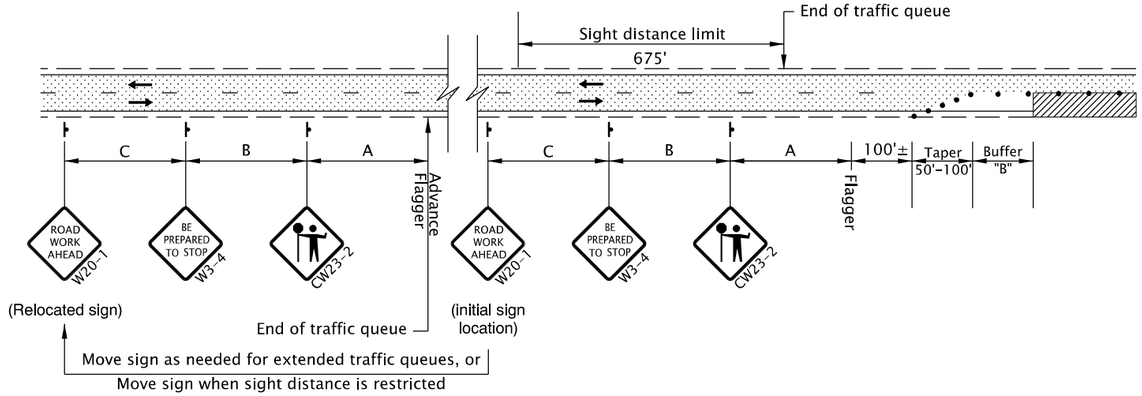

ADVANCE FLAGGER FOR EXTENDED TRAFFIC QUEUES

NOTE:

- When using pilot cars with flaggers to control traffic during paving operations, the Tubular Marker spacing along centerline may be increased to 200' within the Activity Area, as shown or as directed.
- Include "WAIT FOR FLAGGER" (CR4-23) signs mounted on Type II Barricade located approx. 50' before each Flagger.
- Coordinate and control pedestrians movements through the TPAR using Flaggers, other TCM, or as directed. When the existing shoulder is greater than or equal to 4' wide, provide a minimum of 4' of width for the TPAR.

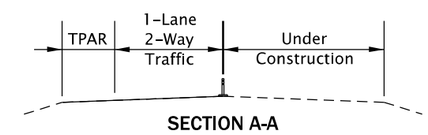

SECTION A-A

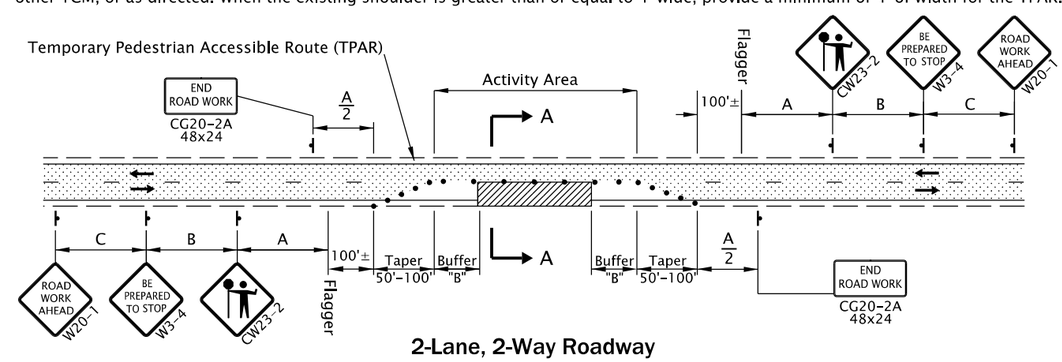

2-Lane, 2-Way Roadway
ONE LANE CLOSURE

GENERAL NOTES FOR ALL DETAILS:

- The "FLAGGER" (CW23-2) symbol sign shall be used only in conjunction with the "BE PREPARED TO STOP" (W3-4) sign.
- Cover existing passing zone signing, as directed.
- Install temporary striping as required.
- To determine Taper Length ("L") and Buffer Length ("B"), use the "MINIMUM LENGTHS TABLE" shown on Dwg. No. TM800.
- To determine sign spacing A, B, and C, use "TRAFFIC CONTROL DEVICES (TCD) SPACING TABLE" on Dwg. No. TM800.
- Install a "BICYCLES ON ROADWAY" (CW11-1) sign in advance of the closure when a bike lane is closed, or when the shoulder is closed and bikes are expected.
- At night, flagger stations shall be illuminated according to the FLAGGER STATION LIGHTING DELINEATION detail on Dwg No. TM800.
- To be accompanied by Dwg. Nos. TM820 & TM821.

• • • • • 28" Tubular Markers on 20' max. spacing for flagger tapers and stations

• • • 28" Tubular Markers See TCD Spacing Table on TM800 for max. spacing.

UNDER TRAFFIC

UNDER CONSTRUCTION

CONSTRUCTION UNDER TRAFFIC

NOTE:

- Use a minimum of 3 tubular markers in shoulder taper on 10' spacing for flagger station delineation.

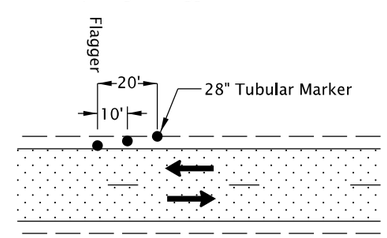

FLAGGER STATION DELINEATION

CALC. BOOK NO. N/A

The selection and use of this Standard Drawing, while designed in accordance with generally accepted engineering principles and practices, is the sole responsibility of the user and should not be used without consulting a Registered Professional Engineer.

SDR DATE 01-JUL-2020

NOTE: All material and workmanship shall be in accordance with the current Oregon Standard Specifications

OREGON STANDARD DRAWINGS

2-LANE, 2-WAY ROADWAYS

2021

DATE	REVISION DESCRIPTION

01-JUL-2020

tm850.dgn

TM850

Effective Date: December 1, 2020 - May 31, 2021

NOTE:
- For left shoulder work, place TCD to close the left shoulder. Use "LEFT SHOULDER CLOSED" (W21-5a) sign.

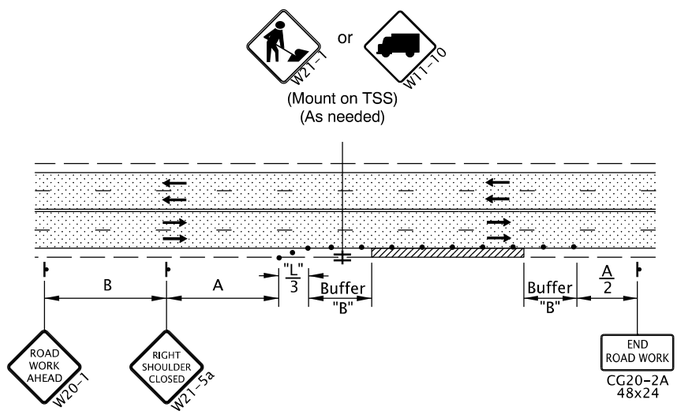

4-Lane, 2-Way Roadway
SHOULDER CLOSURE

NOTE:
- For left lane work, place TCD to close the left lane. Use "LEFT TWO LANES CLOSED AHEAD" (W20-5a), "LEFT LANE CLOSED AHEAD" (W20-5) and "LEFT LANE ENDS" (W4-2) symbol signs.

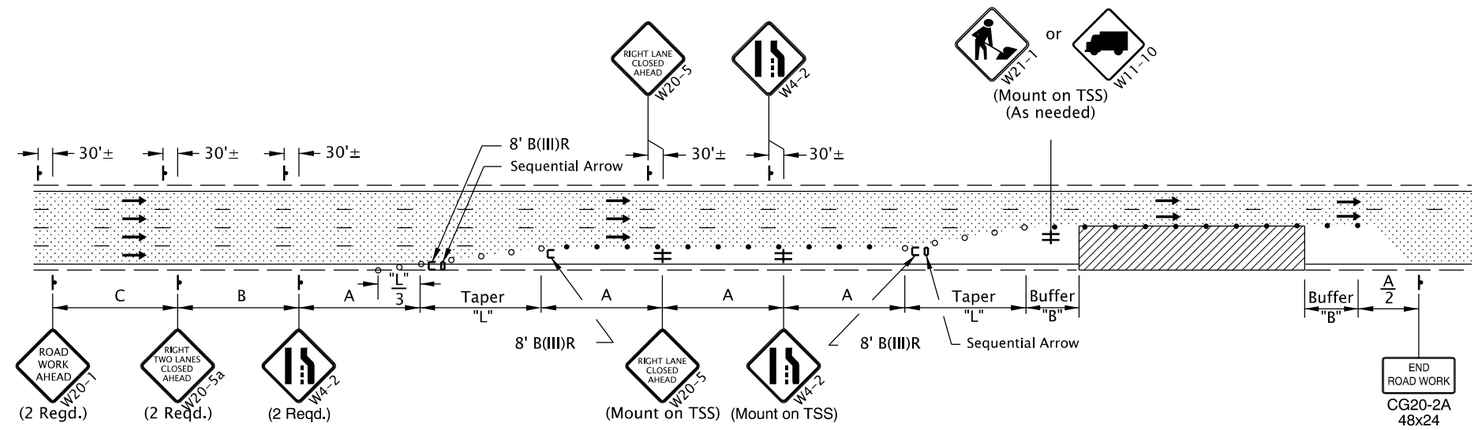

4-Lane, 1-Way Roadway
TWO LANE CLOSURE

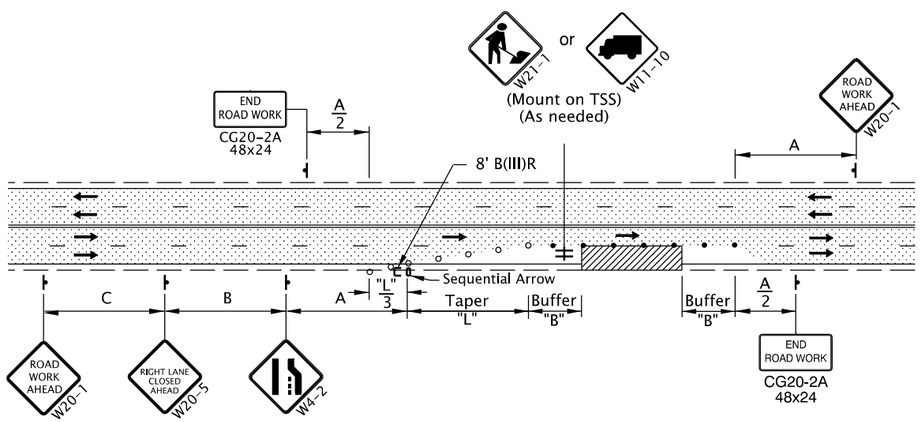

4-Lane, 2-Way Roadway
EXTERIOR LANE CLOSURE

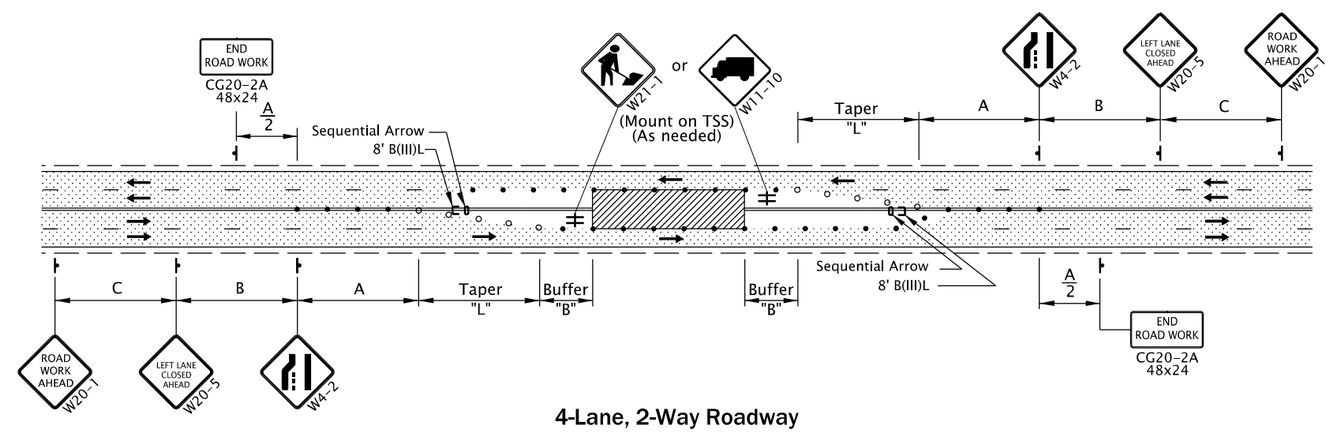

4-Lane, 2-Way Roadway
INTERIOR LANE CLOSURE

GENERAL NOTES FOR ALL DETAILS:

- Install temporary striping as directed.
- Signing and other TCD shown to be installed in conjunction with the work areas, shall move with the work areas.
- To determine Taper Length ("L") and Buffer Length ("B"), use the "MINIMUM LENGTHS TABLE" on Dwg. No. TM800.
- To determine sign spacing A, B, and C, use "TRAFFIC CONTROL DEVICES (TCD) SPACING TABLE" on Dwg. No. TM800.
- Channelization devices may be placed at 10' spacing around the Work Area for emphasis or if the area is exposed to traffic on both sides simultaneously.
- Install a "BICYCLES ON ROADWAY" (CW11-1) sign in advance of the closure when a bike clane is closed, or when the shoulder is closed and bikes are expected.
- To be accompanied by Dwg. Nos. TM820 & TM821.

• • • 28" Tubular Markers
See TCD Spacing Table on TM800 for max. spacing.

○ ○ ○ Temp. Plastic Drums
See TCD Spacing Table on TM800 for max. spacing.

UNDER TRAFFIC

UNDER CONSTRUCTION

CALC. BOOK NO. N/A

SDR DATE 01-JUL-2020

NOTE: All material and workmanship shall be in accordance with the current Oregon Standard Specifications

The selection and use of this Standard Drawing, while designed in accordance with generally accepted engineering principles and practices, is the sole responsibility of the user and should not be used without consulting a Registered Professional Engineer.

OREGON STANDARD DRAWINGS

NON-FREEWAY MULTI-LANE SECTIONS

2021

DATE	REVISION DESCRIPTION

Effective Date: December 1, 2020 - May 31, 2021

tm851.dgn 01-JUL-2020

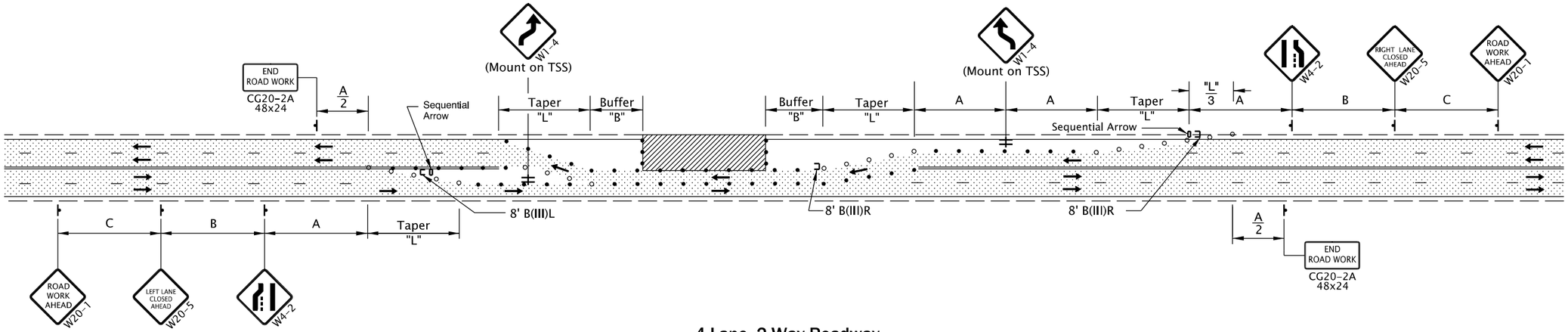

4-Lane, 2-Way Roadway

TWO LANE CLOSURE, CROSSOVER

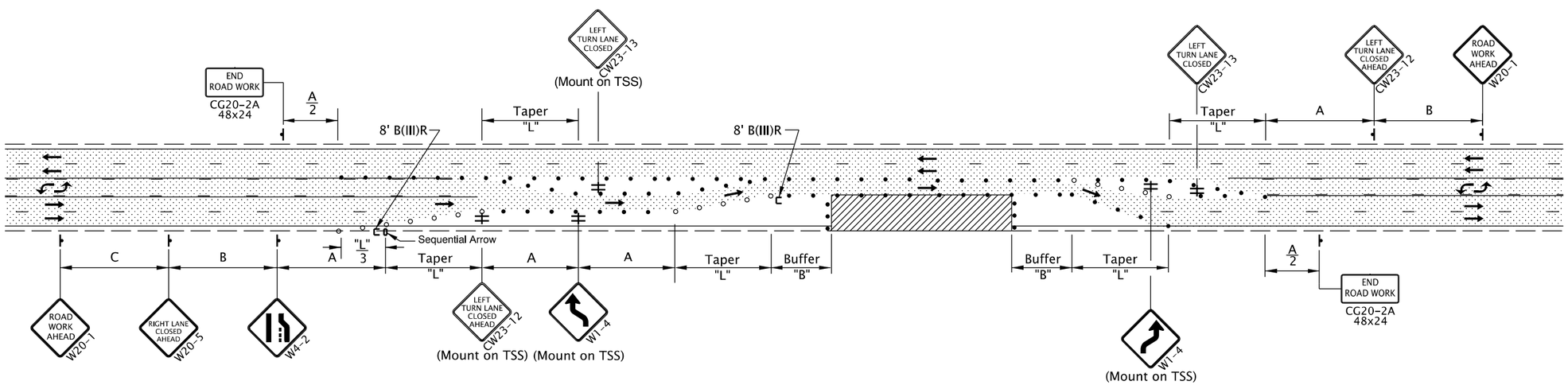

4-Lane, 2-Way Roadway With (TWLTL)

TWO LANE AND MEDIAN CLOSURE

GENERAL NOTES FOR ALL DETAILS:

- Install temporary striping as directed.
- Signing and other TCD shown to be installed in conjunction with the work areas, shall move with the work areas.
- To determine Taper Length ("L") and Buffer Length ("B"), use the "MINIMUM LENGTHS TABLE" on Dwg. No. TM800.
- When the length of the area under construction is less than 600 ft. use a DOUBLE REVERSE CURVE (W24-1) sign in place of the first REVERSE CURVE (W1-4) sign in each direction.
- Install a "BICYCLES ON ROADWAY" (CW11-1) sign in advance of the closure when a bike lane is closed, or when the shoulder is closed and bikes are expected.
- To determine sign spacing A, B, and C, use "TRAFFIC CONTROL DEVICES (TCD) SPACING TABLE" on Dwg. No. TM800.
- Shifting tapers of length "L" recommended for high-speed (>40 mph) roadways; however taper lengths of "L"/2 may be used for low-speed roadways (≤40 mph) or where space is limited.
- Channelization devices may be placed at 10' spacing around the Work Area for emphasis.
- To be accompanied by Dwg. Nos. TM820 & TM821.

• • • 28" Tubular Markers
See TCD Spacing Table on TM800 for max. spacing.

○ ○ ○ Temp. Plastic Drums
See TCD Spacing Table on TM800 for max. spacing.

UNDER TRAFFIC

UNDER CONSTRUCTION

CALC. BOOK NO. N/A

SDR DATE 01-JUL-2020

NOTE: All material and workmanship shall be in accordance with the current Oregon Standard Specifications

The selection and use of this Standard Drawing, while designed in accordance with generally accepted engineering principles and practices, is the sole responsibility of the user and should not be used without consulting a Registered Professional Engineer.

OREGON STANDARD DRAWINGS

NON-FREEWAY MULTI-LANE SECTIONS

2021

DATE	REVISION DESCRIPTION

Effective Date: December 1, 2020 - May 31, 2021

01-JUN-2020
tm852.dgn

TM852

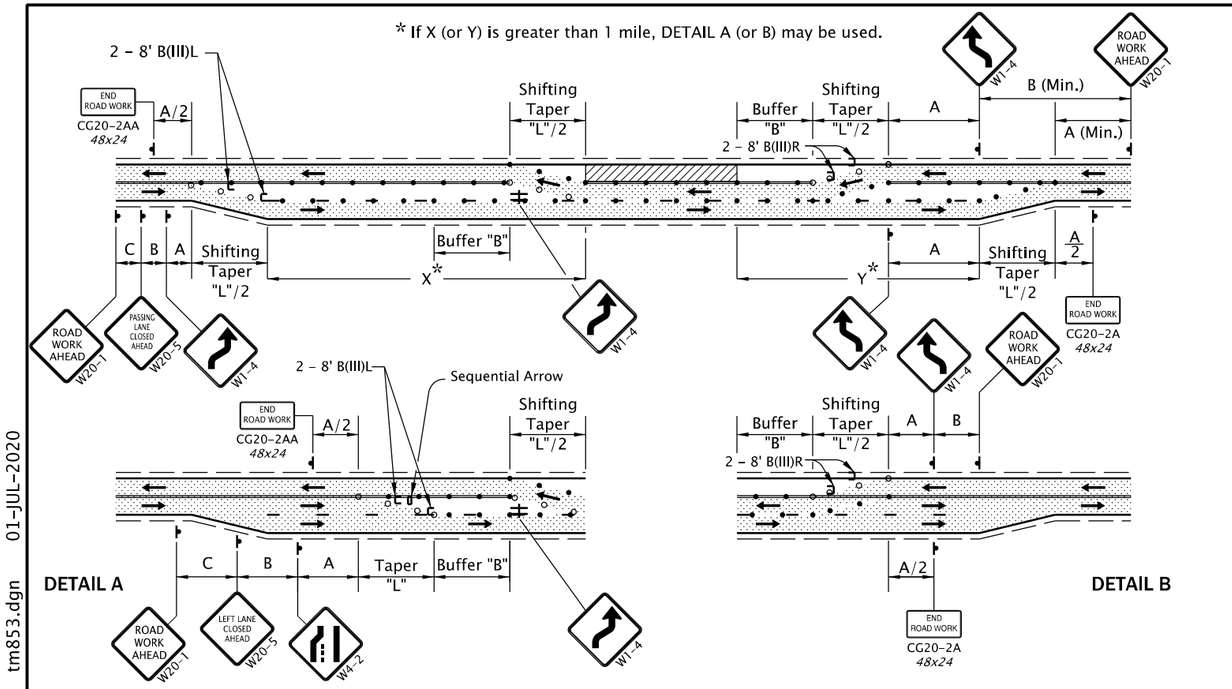

3-Lane, 2-Way Roadway
ONE LANE CLOSURE, CROSSOVER

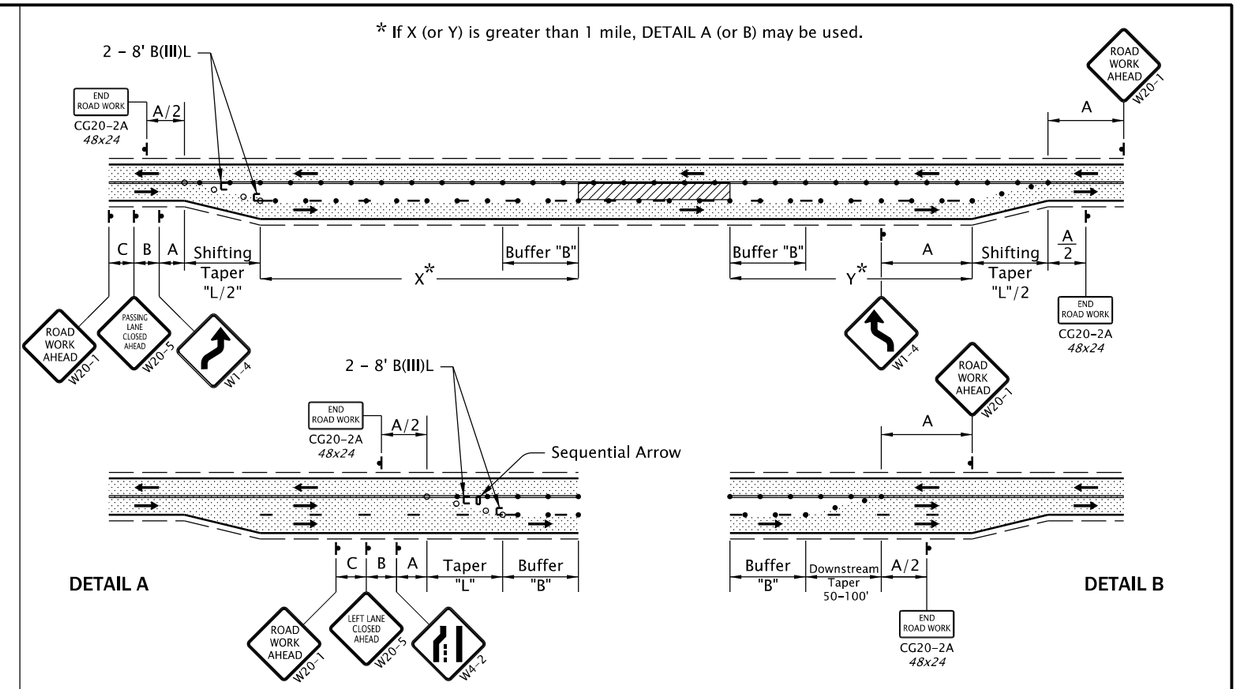

3-Lane, 2-Way Roadway
ONE LANE CLOSURE

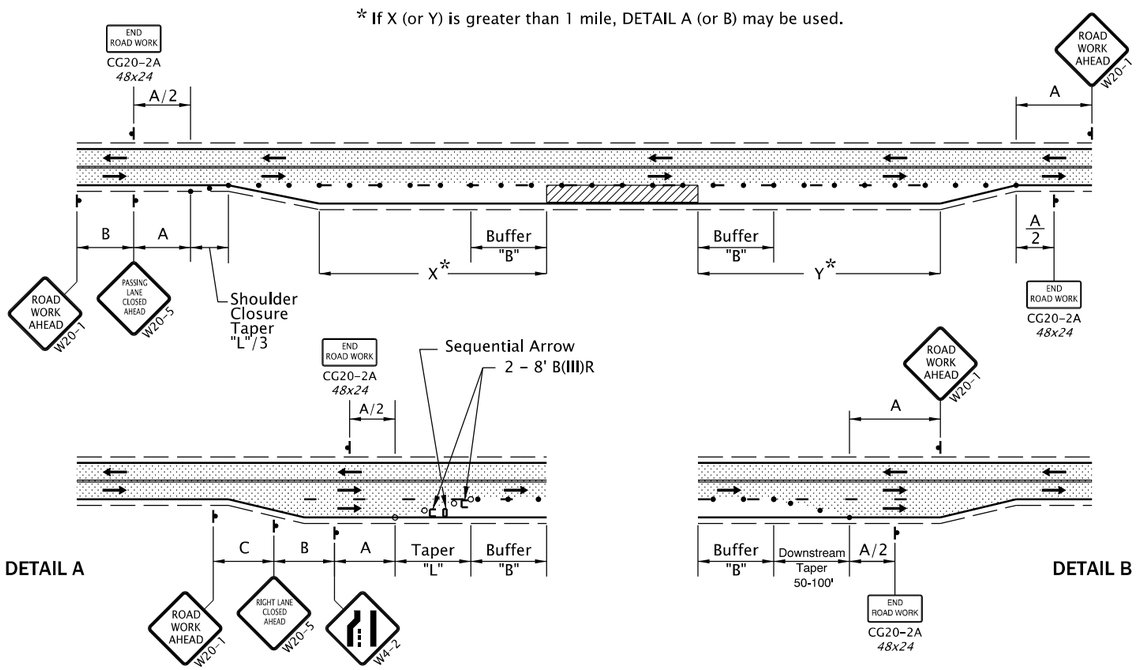

3-Lane, 2-Way Roadway
PASSING LANE CLOSURE

GENERAL NOTES FOR ALL DETAILS:

- Install temporary striping as directed.
- Signing and other TCD shown to be installed in conjuction with the work areas, shall move with the work areas.
- To determine Taper Length ("L") and Buffer Length ("B"), use the "MINIMUM LENGTHS TABLE" on Dwg. No. TM800.
- Cover all applicable existing passing lane signing prior to installing TCD.
- Install Type III barricades in closed lanes at ¼ mile intervals.
- When passing is allowed in opposing lanes, restrict passing with double yellow centerline and appropriate signing as directed.
- Channelization devices may be placed on 10' around the Work Area for emphasis or if the area is to exposed to traffic on both sides simultaneously.
- Install a "BICYCLES ON ROADWAY" (CW11-1) sign in advance of the closure when a bike lane is closed, or when the shoulder is closed and bikes are expected.
- To determine sign spacing A, B, and C, use "TRAFFIC CONTROL DEVICES (TCD) SPACING TABLE" on Dwg. No. TM800.
- When the length of the area under construction is less than 600 ft. use a DOUBLE REVERSE CURVE (W24-1) sign in place of the first REVERSE CURVE (W1-4) sign in each direction.

• • • 28" TUBULAR MARKERS See TCD Spacing Table on TM800 for max. spacing.

○ ○ ○ TEMP. PLASTIC DRUMS See TCD Spacing Table on TM800 for max. spacing.

UNDER TRAFFIC

UNDER CONSTRUCTION

CALC. BOOK NO. N/A

SDR DATE 01-JUL-2020

NOTE: All material and workmanship shall be in accordance with the current Oregon Standard Specifications

The selection and use of this Standard Drawing, while designed in accordance with generally accepted engineering principles and practices, is the sole responsibility of the user and should not be used without consulting a Registered Professional Engineer.

OREGON STANDARD DRAWINGS

NON-FREEWAY MULTI-LANE SECTIONS

2021

DATE	REVISION DESCRIPTION

Effective Date: December 1, 2020 - May 31, 2021

tm853.dgn 01-JUL-2020

TM853

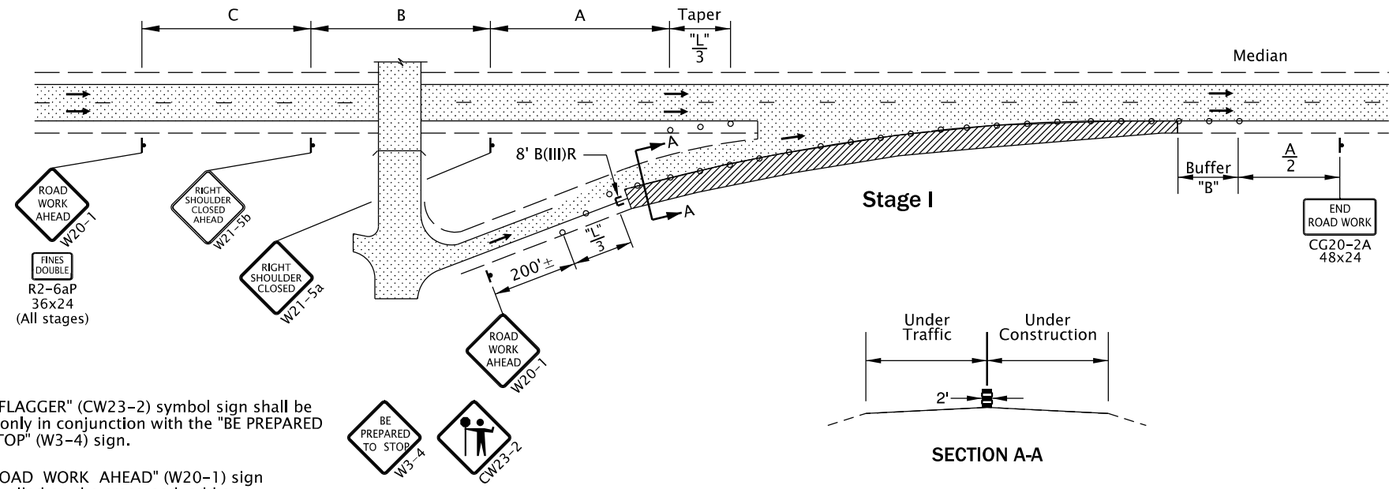

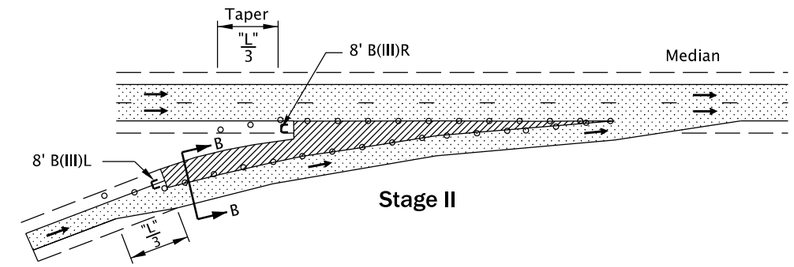

SECTION A-A

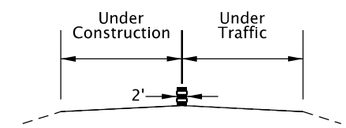

SECTION B-B

NOTES:

- The "FLAGGER" (CW23-2) symbol sign shall be used only in conjunction with the "BE PREPARED TO STOP" (W3-4) sign.
- If "ROAD WORK AHEAD" (W20-1) sign is installed on the crossroad, add an "ON RAMP" (W13-4P) plaque below the sign.

ON-RAMP

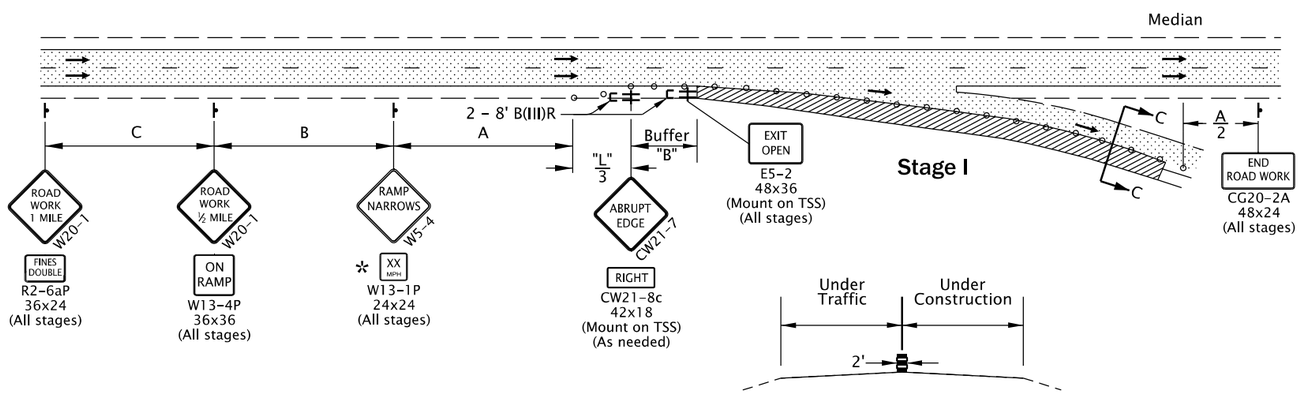

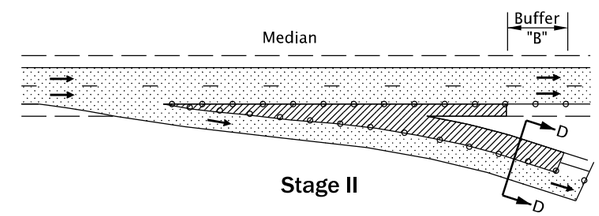

SECTION C-C

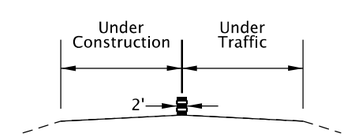

SECTION D-D

✲ Speed designation shall be the comfort speed as required by radii of ramp curve(s) and superelevation rate(s). See Highway Design Manual Comfort Speed Table 3-5.

OFF-RAMP

GENERAL NOTES FOR ALL DETAILS:

- Signing and other TCD shown to be installed in conjunction with the work areas, shall move with the work areas.
- Use Concrete Barrier Sign Supports for mounting signs with a maximum 12 sq. ft. of total sign area. See Dwg. No. TM822 for Concrete Barrier Sign Support Details.
- Unless otherwise shown, use the "MINIMUM LENGTHS TABLE" on Dwg. No. TM800 to determine Taper Length ("L") and Buffer Length ("B").
- Flaggers are not permitted to stop or hold freeway traffic.
- To determine sign spacing A, B, and C, use "TRAFFIC CONTROL DEVICES (TCD) SPACING TABLE" on Dwg. No. TM800.
- Speeds shown on signing shall be in MPH. Distances shown on signing shall be in feet or miles.
- A Truck Mounted Attenuator (TMA) may be used for additional protection at the active work area. Locate TMA per manufacturer's instructions, or as directed.
- During partial ramp closures provide a minimum of 16' of horizontal clearance between channelization devices, or as directed.
- To be accompanied by Dwg. Nos. TM820 & TM821.

Temp. Plastic Drums

Temp. Plastic Drums See TCD Spacing Table on TM800 for max. spacing.

UNDER TRAFFIC

UNDER CONSTRUCTION

CALC. BOOK NO. TM09-01

SDR DATE 01-JUL-2020

NOTE: All material and workmanship shall be in accordance with the current Oregon Standard Specifications

The selection and use of this Standard Drawing, while designed in accordance with generally accepted engineering principles and practices, is the sole responsibility of the user and should not be used without consulting a Registered Professional Engineer.

OREGON STANDARD DRAWINGS

FREEWAY SECTIONS - RAMPS

2021

DATE	REVISION DESCRIPTION

01-JUL-2020

tm860.dgn

TM860

Effective Date: December 1, 2020 - May 31, 2021

NOTES:

- Use "ABRUPT EDGE" (CW21-(7,9)) signing for longitudinal abrupt edges of 1 inch or greater.
- Additional "ABRUPT EDGE"(CW21-(7,9)) signs with appropriate riders to be installed on both sides of highway at ½ mile intervals throughout area under construction where applicable.
- "BUMP" (W8-1) signs to be installed on both sides of highway where applicable.
- If roll-up signs are used, attach the correct (CW21-9) plaques to the sign face using hook and loop fasteners.
- Do not stage traffic across longitudinal shoulder rumble strips. Remove rumble strip according to the plans and Dwg. No. TM830.
- For Freeway preservation work use Dwg. No. TM880, unless otherwise directed.

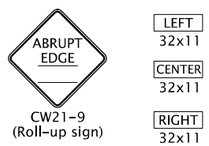

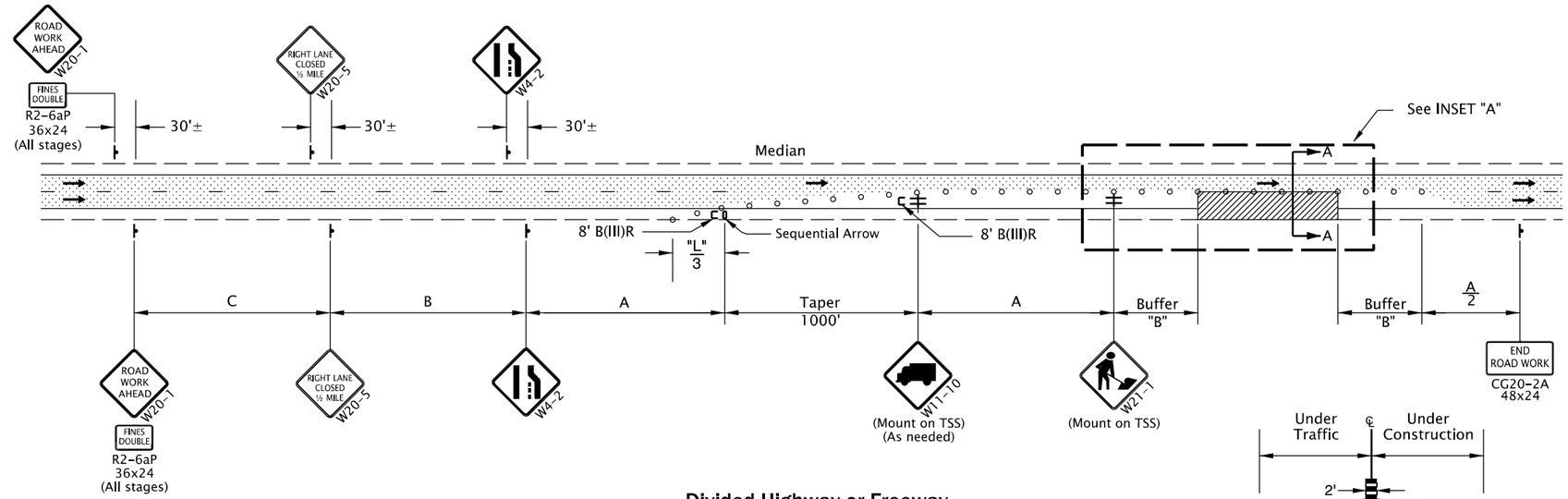

Divided Highway or Freeway
ONE LANE CLOSURE

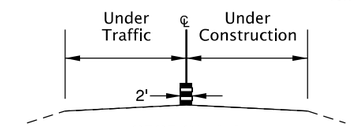

SECTION A-A

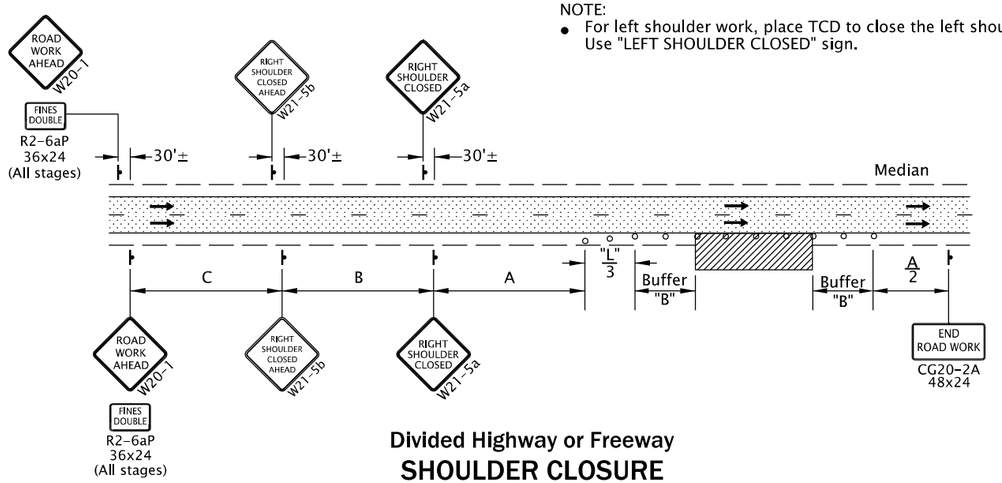

NOTE:
- For left shoulder work, place TCD to close the left shoulder. Use "LEFT SHOULDER CLOSED" sign.

Divided Highway or Freeway
SHOULDER CLOSURE

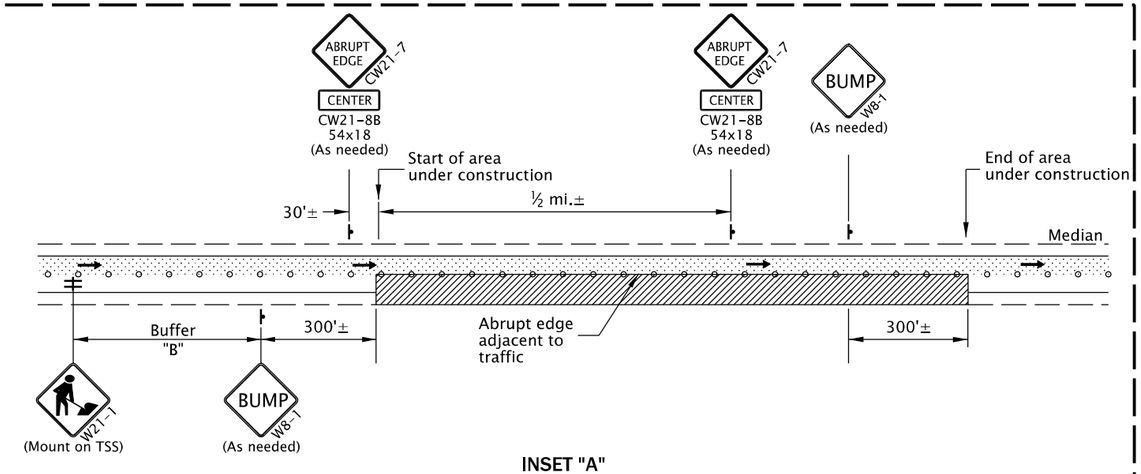

INSET "A"
(Signing Detail)

GENERAL NOTES FOR ALL DETAILS:

- Flaggers are not permitted to stop or hold freeway traffic.
- Signing and other TCD shown to be installed in conjunction with the work areas, shall move with the work areas.
- Use Concrete Barrier Sign Supports for mounting signs with a maximum 12 sq. ft. of total sign area. See Dwg. No. TM822 for Concrete Barrier Sign Support details.
- Unless otherwise shown, use the "MINIMUM LENGTHS TABLE" on Dwg. No. TM800 to determine Taper Length "L" and Buffer Length "B".
- To determine sign spacing A, B, and C, use "TRAFFIC CONTROL DEVICES (TCD) SPACING TABLE" on Dwg. No. TM800.
- For work in the left lane, place TCD to close the left lane. Use "LEFT LANE CLOSED AHEAD" (W20-5) signs and the appropriate "LEFT LANE ENDS" (W4-2) signs.
- Truck Mounted Attenuator (TMA) should be used to protect the active work area. Locate TMA as per manufacturer's instructions, or as directed.
- Additional traffic control devices may be used, as directed, to enhance the work zone, including; PMCS, Radar Speed Trailers, Advisory Speed signing, *Temp. Regulatory Speed Zone Reductions.
  * Regulatory speed reductions on State Highways require a Speed Zone Order signed by the State Traffic Engineer.
- To be accompanied by Dwg. Nos. TM820, & TM821.

o o o Temp. Plastic Drums on 40' max. spacing.

UNDER TRAFFIC

UNDER CONSTRUCTION

CALC. BOOK NO. N/A

SDR DATE 01-JUL-2020

NOTE: All material and workmanship shall be in accordance with the current Oregon Standard Specifications

The selection and use of this Standard Drawing, while designed in accordance with generally accepted engineering principles and practices, is the sole responsibility of the user and should not be used without consulting a Registered Professional Engineer.

OREGON STANDARD DRAWINGS

FREEWAY SECTIONS

2021

DATE	REVISION DESCRIPTION

tm861.dgn 01-JUL-2020

TM861

Effective Date: December 1, 2020 - May 31, 2021

NOTES:

- Use "ABRUPT EDGE" (CW21-(7,9)) signing for longitudinal abrupt edges of 1 inch or greater.
- Additional "ABRUPT EDGE" (CW21-(7,9)) signs with appropriate riders to be installed on both sides of highway at ½ mile intervals throughout area under construciton where applicable.
- "BUMP" (W8-1) signs to be installed on both sides of highway where applicable.
- If roll-up signs are used, attach the correct (CW21-9) plaques to the sign face using hook and loop fasteners.
- Do not stage traffic across longitudinal shoulder rumble strips. Remove rumble according to the plans and Std. Dwg. TM830.
- For Freeway preservation work use Std. Dwg. TM880, unless otherwise directed.

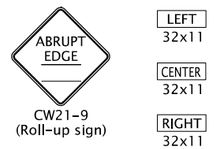

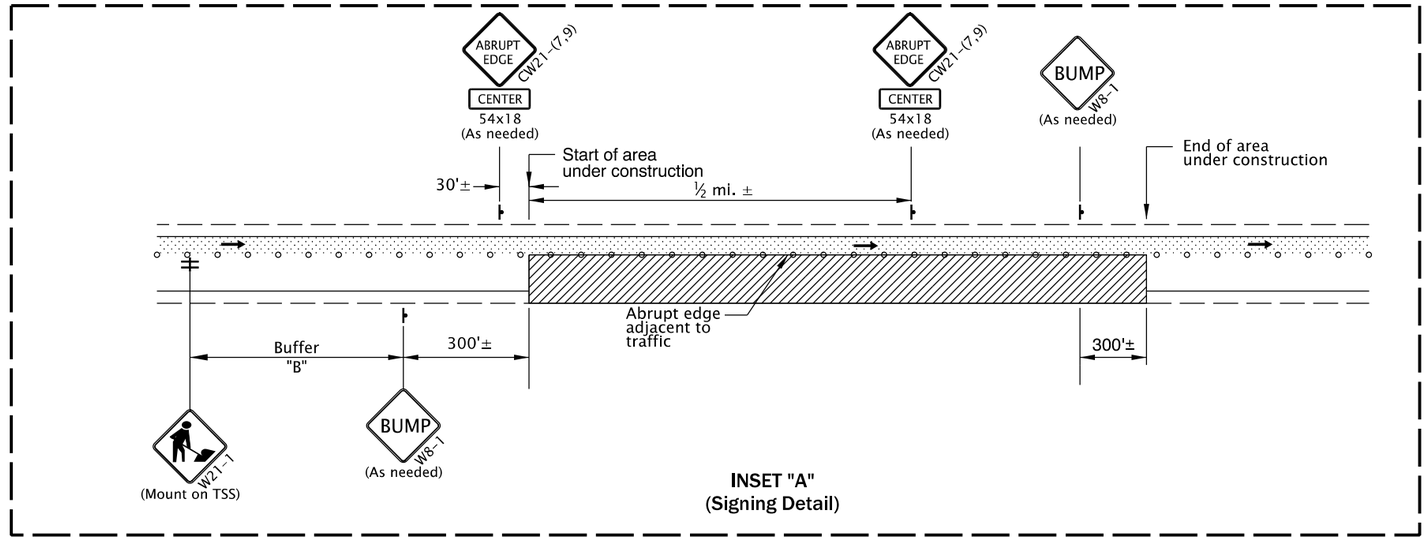

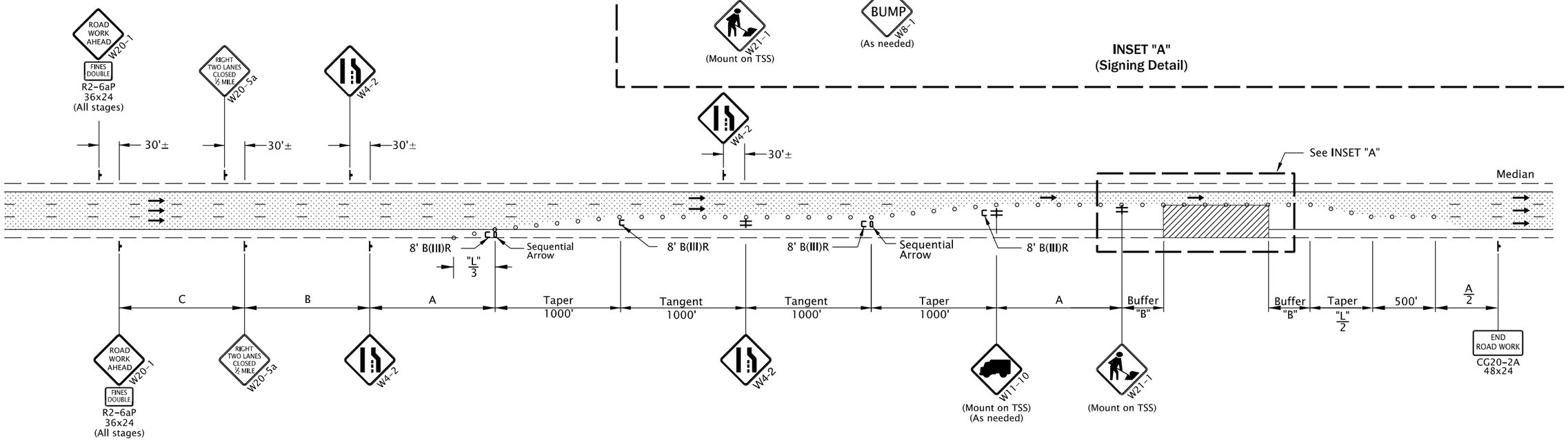

Divided Highway or Freeway

TWO LANE CLOSURE

GENERAL NOTES FOR ALL DETAILS:

- Flaggers are not permitted to stop or hold freeway traffic.
- Signing and other TCD shown to be installed in conjunction with the work areas, shall move with the work areas.
- Use Concrete Barrier Sign Support for mounting signs with a maximum 12 sq. ft. of total sign area. See Dwg. No. TM822 for Concrete Barrier Sign Support details.
- Unless otherwise shown, use the "MINIMUM LENGTHS TABLE" on Dwg. No. TM800 to determine Taper Length "L" and Buffer Length "B".
- To determine sign spacing A, B, and C, use TRAFFIC CONTROL DEVICES (TCD) SPACING TABLE on Dwg. TM800.
- For work in the left lane, place TCD to close the left lane. Use "LEFT TWO LANES CLOSED AHEAD" (W20-5a)signs and the appropriate "LEFT LANE ENDS" (W4-2) signs.
- Truck mounted attenuator (TMA) should be used to protect the active work area. Locate TMA as per manufacturer's instructions, or as directed.
- Additional traffic control devices may be used, as directed, to enhance the work zone, including; PCMS, Radar Speed Trailers, Advisory Speed signing, *Temp. Regulatory Speed Zone Reductions. *Regulatory speed reductions on State Highways require a Speed Zone Order signed by the State Traffic Engineer.
- To be accompanied by Dwg. Nos. TM820 & TM821.

o o o Temp. Plastic Drums 40' max. spacing.

UNDER TRAFFIC

UNDER CONSTRUCTION

CALC. BOOK NO. N/A

SDR DATE 01-JUL-2020

NOTE: All material and workmanship shall be in accordance with the current Oregon Standard Specifications

The selection and use of this Standard Drawing, while designed in accordance with generally accepted engineering principles and practices, is the sole responsibility of the user and should not be used without consulting a Registered Professional Engineer.

OREGON STANDARD DRAWINGS

FREEWAY SECTIONS

2021

DATE	REVISION DESCRIPTION

tm862.dgn 01-JUL-2020

TM862

Effective Date: December 1, 2020 - May 31, 2021

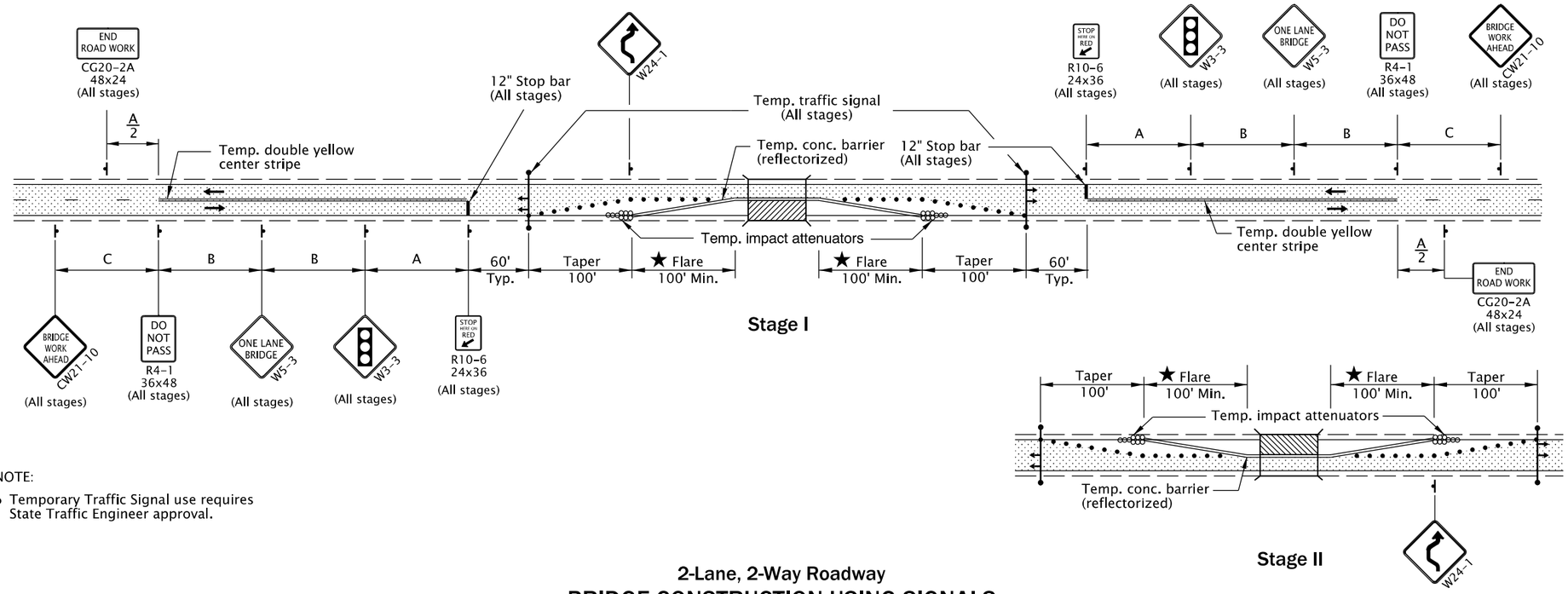

NOTE:

- Temporary Traffic Signal use requires State Traffic Engineer approval.

2-Lane, 2-Way Roadway

BRIDGE CONSTRUCTION USING SIGNALS

GENERAL NOTES FOR ALL DETAILS:

- For single lane operations, maintain 19' minimum horizontal clearance between positive barriers, or as directed. If overwidth loads are diverted, the roadway width may be adjusted, as directed.
- Bridge replacement requires use of positive protection (i.e. temp. barrier) for the work area.
- To determine sign spacing A, B, and C, use "TRAFFIC CONTROL DEVICES (TCD) SPACING TABLE" on Dwg. No. TM800.
- DOUBLE REVERSING CURVE (W24-1) symbol sign may be used for work areas up to 600'. For longer work areas, use "REVERSING CURVE" (W1-4) [L and R] signs.
- Install a "BICYCLES ON ROADWAY" (CW11-10) sign in advance of the closure when a bike lane is closed, or when the shoulder is closed and bikes are expected.

★ See "TEMPORARY BARRIER FLARE RATE TABLE" on Dwg. No. TM800.

- To be accompanied by Dwg. Nos. RD500, TM820, TM821, TM830, & TM831.

• • • • • 28" Tubular Markers on 20' max. spacing

UNDER TRAFFIC

UNDER CONSTRUCTION

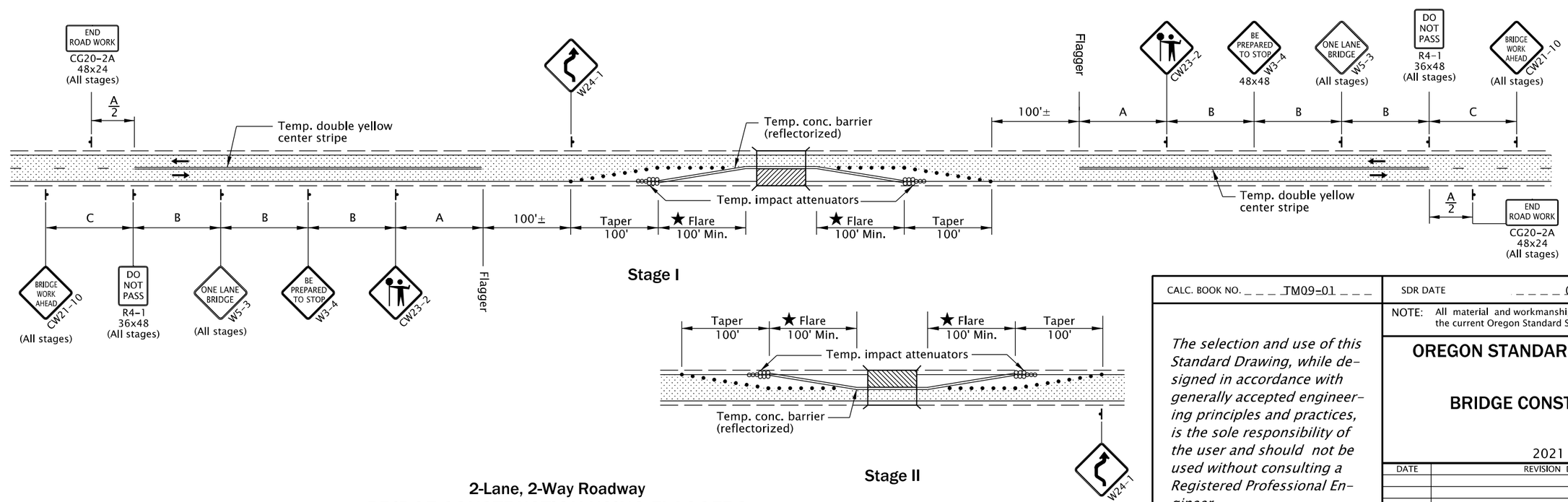

2-Lane, 2-Way Roadway

BRIDGE CONSTRUCTION USING FLAGGERS

CALC. BOOK NO. TM09-01

SDR DATE 01-JUL-2020

NOTE: All material and workmanship shall be in accordance with the current Oregon Standard Specifications

The selection and use of this Standard Drawing, while designed in accordance with generally accepted engineering principles and practices, is the sole responsibility of the user and should not be used without consulting a Registered Professional Engineer.

OREGON STANDARD DRAWINGS

BRIDGE CONSTRUCTION

2021

DATE	REVISION DESCRIPTION

Effective Date: December 1, 2020 - May 31, 2021

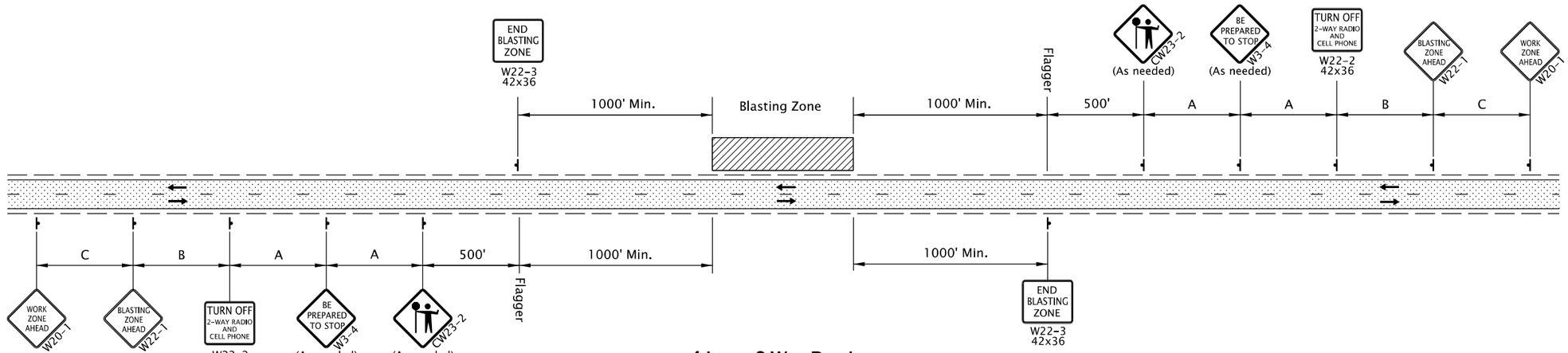

4-Lane, 2-Way Roadway
BLASTING ZONE

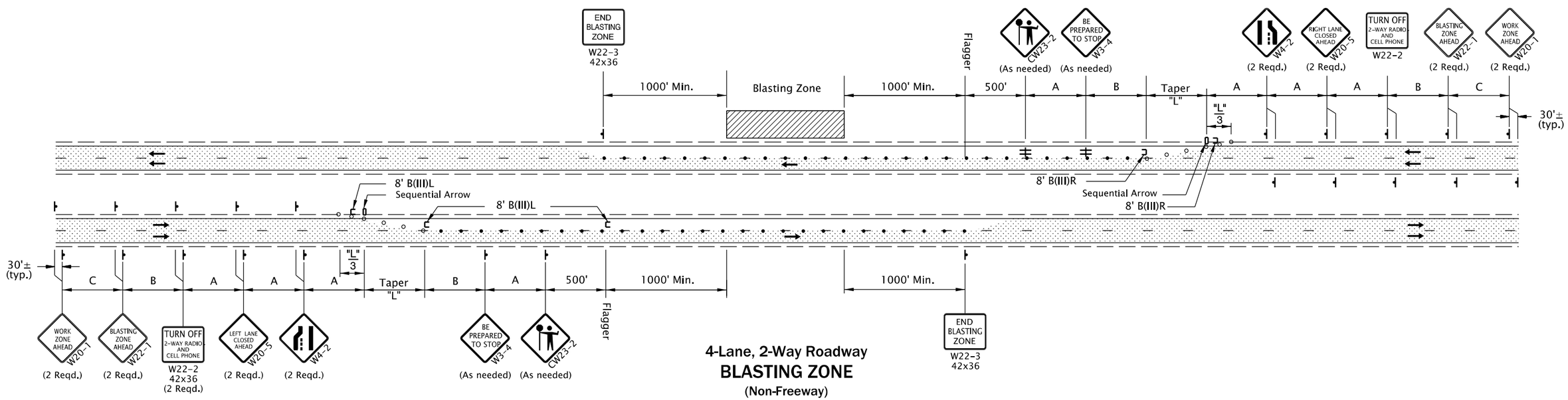

4-Lane, 2-Way Roadway
BLASTING ZONE
(Non-Freeway)

GENERAL NOTES FOR ALL DETAILS:

- Configurations are NOT to be used on freeways. For freeways, a total closure or rolling slowdown should be used for blasting operations, as shown in the plans or directed.
- The signs shall be covered or removed when there are no explosives in the area or when the area is otherwise secure.
- Whenever a side road intersects the roadway between the "BLASTING ZONE AHEAD" (W22-1) sign and the "END BLASTING ZONE" (W22-3)sign, or a side road is within 1000' of any blasting cap, similar signing, as on the mainline, shall be erected on the side road.
- Before blasting, the "Explosives Specialist" shall determine whether highway traffic in the blasting zone will be endangered by the blasting operation. If there is danger, highway traffic shall not be permitted to pass through the blasting zone during blasting operations.
- The "FLAGGER" (CW23-2) symbol sign shall be used only in conjunction with the "BE PREPARED TO STOP" (W3-4) sign.
- Do not stop or hold traffic in excess of 20 minutes including rock and debris clean up.
- All offsets between sign pairs in multi-lane sections are 30' with median signs closest to approaching traffic.
- To determine Taper Length "L" and Buffer Length "B" use the "MINIMUM LENGTHS TABLE" on Dwg. No. TM800.
- To determine sign spacing A, B, and C, use "TRAFFIC CONTROL DEVICES (TCD) SPACING TABLE" on Dwg. No. TM800.
- To be accompanied by Dwg. No. TM820 & TM821.

• • • 28" Tubular Markers See TCD Spacing Table on TM800 for max. spacing.

○ ○ ○ Temp. Plastic Drums See TCD Spacing Table on TM800 for max. spacing.

UNDER TRAFFIC

UNDER CONSTRUCTION

CALC. BOOK NO. N/A

SDR DATE 01-JUL-2020

NOTE: All material and workmanship shall be in accordance with the current Oregon Standard Specifications

The selection and use of this Standard Drawing, while designed in accordance with generally accepted engineering principles and practices, is the sole responsibility of the user and should not be used without consulting a Registered Professional Engineer.

OREGON STANDARD DRAWINGS

BLASTING ZONES

2021

DATE	REVISION DESCRIPTION

tm871.dgn 01-JUL-2020

TM871

Effective Date: December 1, 2020 - May 31, 2021

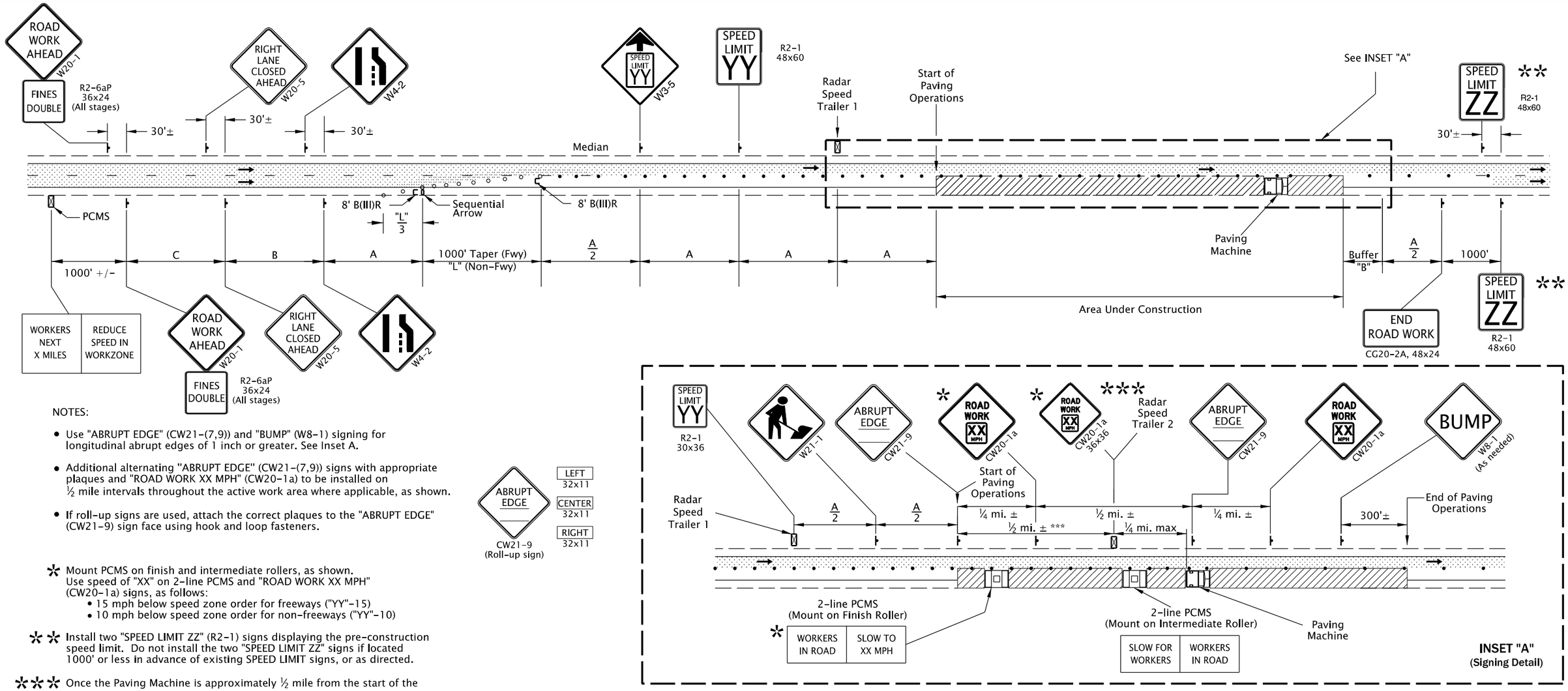

NOTES:

- Use "ABRUPT EDGE" (CW21-(7,9)) and "BUMP" (W8-1) signing for longitudinal abrupt edges of 1 inch or greater. See Inset A.
- Additional alternating "ABRUPT EDGE" (CW21-(7,9)) signs with appropriate plaques and "ROAD WORK XX MPH" (CW20-1a) to be installed on ½ mile intervals throughout the active work area where applicable, as shown.
- If roll-up signs are used, attach the correct plaques to the "ABRUPT EDGE" (CW21-9) sign face using hook and loop fasteners.

* Mount PCMS on finish and intermediate rollers, as shown. Use speed of "XX" on 2-line PCMS and "ROAD WORK XX MPH" (CW20-1a) signs, as follows:
- 15 mph below speed zone order for freeways ("YY"-15)
- 10 mph below speed zone order for non-freeways ("YY"-10)

** Install two "SPEED LIMIT ZZ" (R2-1) signs displaying the pre-construction speed limit. Do not install the two "SPEED LIMIT ZZ" signs if located 1000' or less in advance of existing SPEED LIMIT signs, or as directed.

*** Once the Paving Machine is approximately ½ mile from the start of the paving operations, place the "Radar Speed Trailer 2" and other signing and TCD, as shown. Move "Radar Speed Trailer 2" as work progresses. Maintain "Radar Speed Trailer 2" within a ¼ mile of the paving machine.

Freeway or Divided Highway
ONE LANE CLOSURE WITH SPEED REDUCTION (PAVING OPERATIONS)
(Must be accompanied by an approved Speed Zone Order)

GENERAL NOTES FOR ALL DETAILS:

- Drawing intended for continuous or intermittantly moving paving or pavement preservation activities on freeways or high-speed divided highways.
- Flaggers are not permitted to stop or hold freeway traffic.
- If the inside shoulder in either direction is less than 4' use 36x36 signs, as shown on Dwg. Nos. TM821 and TM822.
- Unless otherwise shown, use the "MINIMUM LENGTHS TABLE" on Dwg. No. TM800 to determine Taper Length "L" and Buffer Length "B".
- Place a Type III barricade in closed lane on ¼ mile spacing, as shown, after rollers have completed compaction.
- Decrease Tubular Marker spacing to 40 ft. behind the paving machine as work progresses.
- To determine sign spacing A, B, and C, use "TRAFFIC CONTROL DEVICES (TCD) SPACING TABLE" on Dwg. TM800.
- For work in the left lane, place TCD to close the left lane. Use "LEFT LANE CLOSED AHEAD" (W20-5) signs and the appropriate "LEFT LANE ENDS" (W4-2) signs.
- Speed Limit of "YY" shown on signs to be determined by an approved Speed Zone Order from the State Traffic Engineer.
- Do not delineate Radar Speed Trailers. Locate trailer as shown, or as directed.
- To be accompanied by Dwg. Nos. TM820 & TM821.

• • 28" Tubular Markers @ 80 ft. max spacing.

• • • 28" Tubular Markers See TCD Spacing Table on TM800 for max. spacing.

○ ○ ○ Temp. Plastic Drums See TCD Spacing Table on TM800 for max. spacing.

UNDER TRAFFIC

UNDER CONSTRUCTION

CALC. BOOK NO. N/A

SDR DATE 01-JUL-2020

NOTE: All material and workmanship shall be in accordance with the current Oregon Standard Specifications

The selection and use of this Standard Drawing, while designed in accordance with generally accepted engineering principles and practices, is the sole responsibility of the user and should not be used without consulting a Registered Professional Engineer.

OREGON STANDARD DRAWINGS

FREEWAY or DIVIDED HIGHWAY SPEED REDUCTION (PAVING OPERATIONS)

2021

DATE	REVISION DESCRIPTION

tm880.dgn 01-JUL-2020

TM880

Effective Date: December 1, 2020 - May 31, 2021