POLICE PANEL
(Side View)

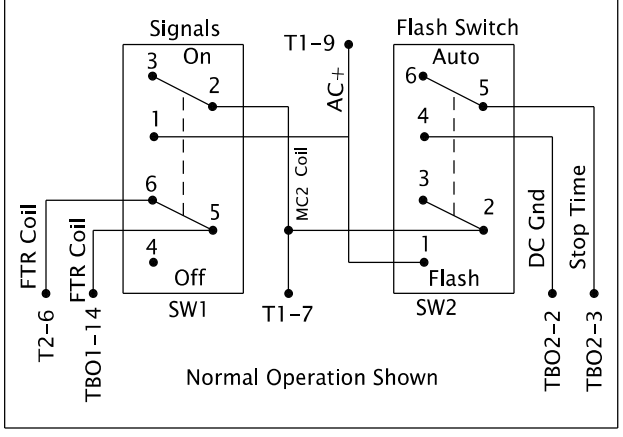

SERVICE PANEL

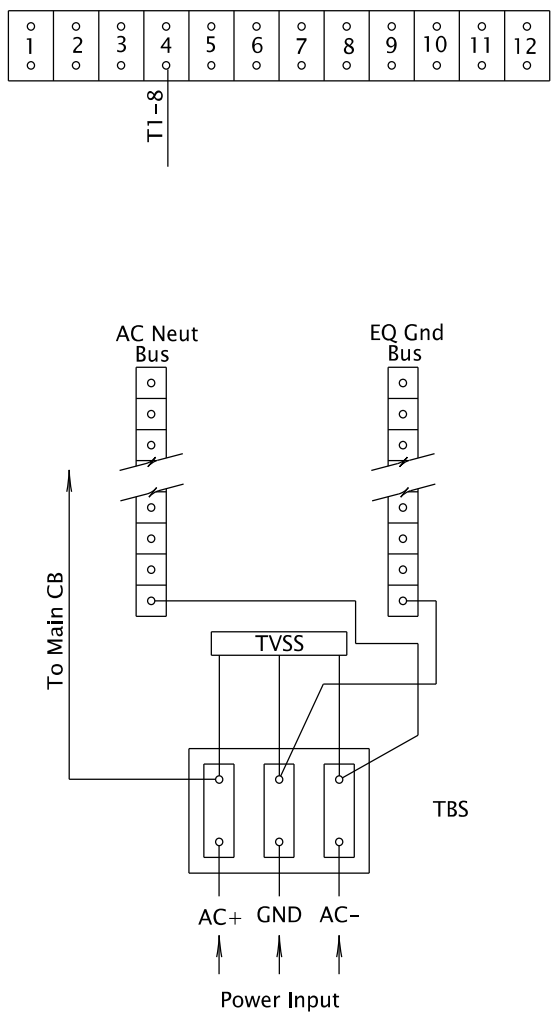

FRONT VIEW (TYPICAL)

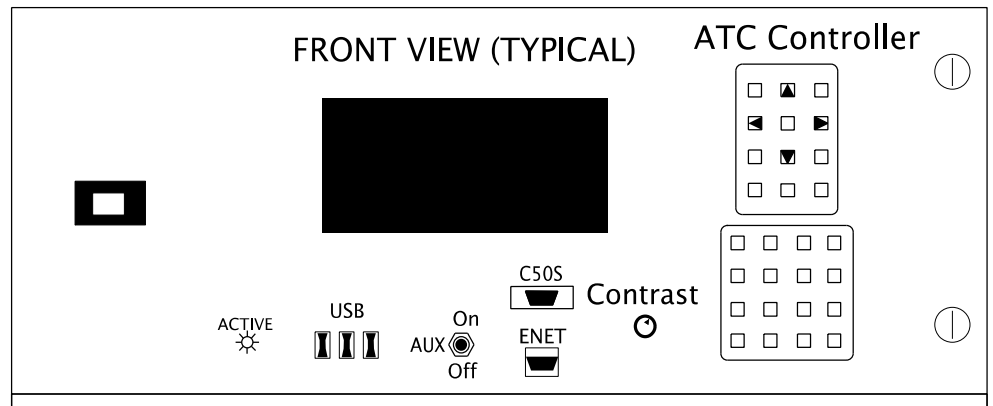

Model ATC Controller

DRAWER

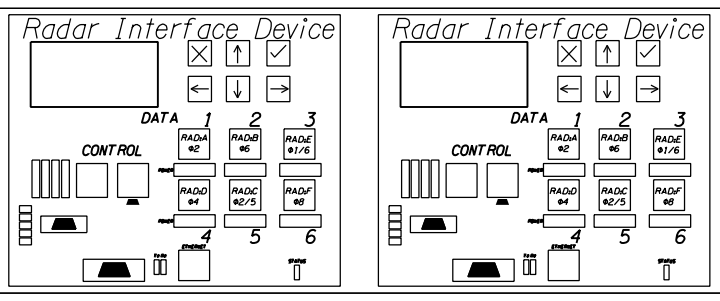

Radar Interface

Channel 1
Input File "I"
Channel 2

IMPORT INPUT FILE USING AXIOM IMPORTER FROM THE DETECTION CONFIGURATION EXCEL FILE AFTER SIGNAL TIMER HAS FINISHED CONFIGURATION - RESIZE TO FIT THIS DASHED AREA

Channel 1
Input File "J"
Channel 2

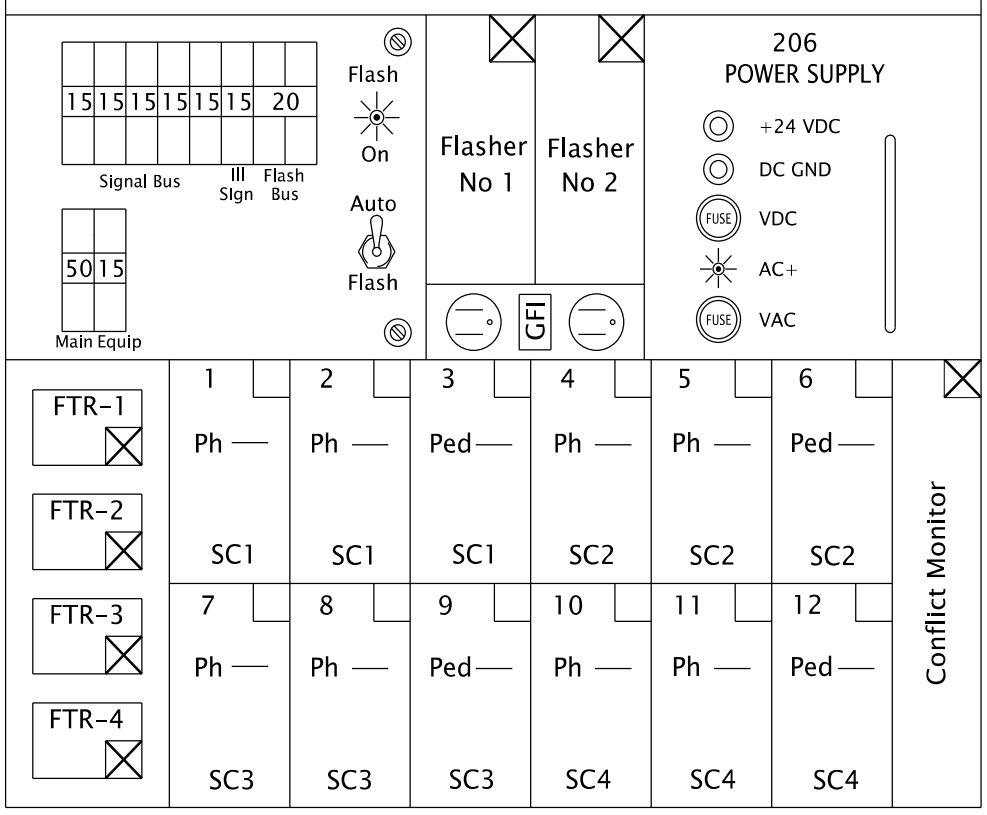

Power Distribution Assembly #2

Output File

SHEET 1

REV. NO.	DATE	INITIAL	REMARKS
1	10/19	JS	Print to be used when using SDLC only.

INTERSECTION: Main Street @ Cross Street Any Town

HWY#: XXX M.P.#: XXX.XX TSSU ID#: XXXXX

OREGON DEPARTMENT OF TRANSPORTATION
TRAFFIC - ROADWAY SECTION

332 CABINET WIRING DIAGRAM

REV 03/18/15

332_SDLC_cabinet_11X17.dgn :: Default 7/16/2020 12:46:56 PM hwym26p

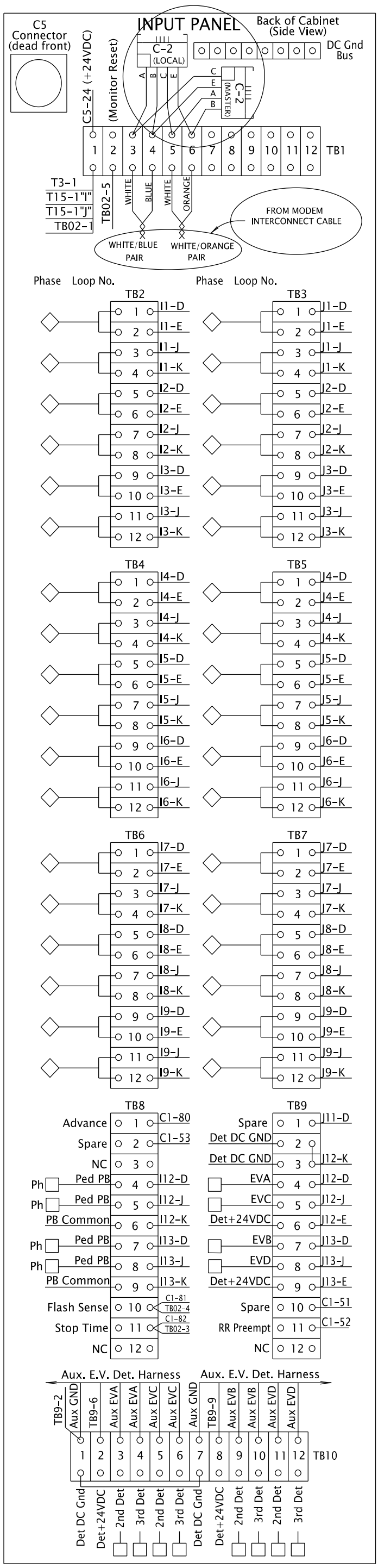

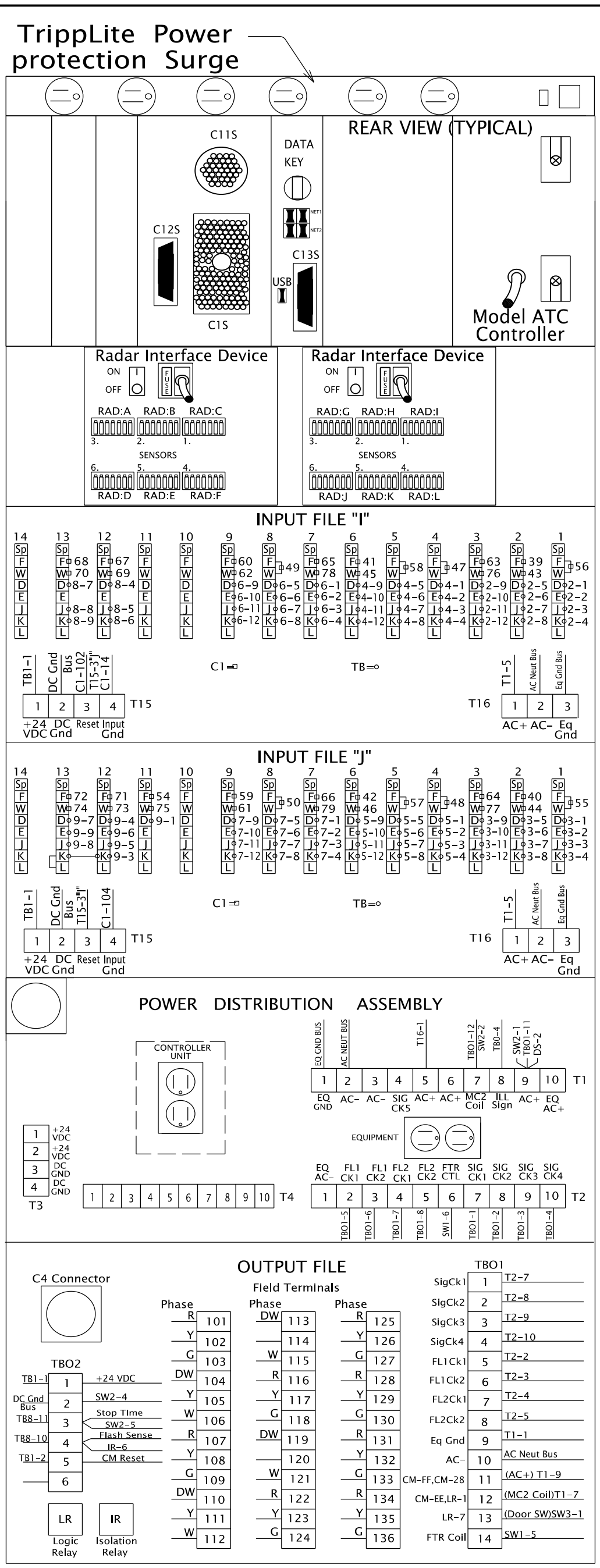

INTERSECTION: Main Street @ Cross Street Any Town

HWY#: XXX M.P.#: XXX.XX TSSU ID#: XXXXX

SHEET 2

332_SDLC_cabinet_11X17.dgn :: Default 7/16/2020 12:46:57 PM hwym26p

PROGRAM PIN ASSIGNMENTS

Program Assigned Functions	C1 Connector		C4 Connector				Field Term.
	Pin	Termination	Pin	Switch Pack			
				In	Position	Out	
DC Gnd	1	DC Gnd Bus	–	–	–	–	–
Ø4 D.WALK	2	C4-1	1	6	6-DW	3	104
Ø4 WALK	3	C4-2	2	10	6-W	7	106
Ø4 RED	4	C4-3	3	6	5-R	3	101
Ø4 YELLOW	5	C4-4	4	8	5-Y	5	102
Ø4 GREEN	6	C4-5	5	10	5-G	7	103
Ø 3 RED	7	C4-6	6	6	4-R	3	116
Ø3 YELLOW	8	C4-7	7	8	4-Y	5	117
Ø3 GREEN	9	C4-8	8	10	4-G	7	118
Ø2 D.WALK	10	C4-9	9	6	3-DW	3	113
Ø2 WALK	11	C4-10	10	10	3-W	7	115
2 RED	12	C4-11	11	6	2-R	3	128
2 YELLOW	13	C4-12	12	8	2-Y	5	129
Input Gnd	14		–	–	–	–	–
Ø2 GREEN	15	C4-13	13	10	2-G	7	130
Ø1 RED	16	C4-14	14	6	1-R	3	125
Ø1 YELLOW	17	C4-15	15	8	1-Y	5	126
Ø1 GREEN	18	C4-16	16	10	1-G	7	127
Ø8 D.WALK	19	C4-17	17	6	12-DW	3	110
Ø 8 WALK	20	C4-18	18	10	12-W	7	112
Ø8 RED	21	C4-19	19	6	11-R	3	107
Ø8 YELLOW	22	C4-20	20	8	11-Y	5	108
Ø 8 GREEN	23	C4-21	21	10	11-G	7	109
Ø 7 RED	24	C4-22	22	6	10-R	3	122
Ø 7 YELLOW	25	C4-23	23	8	10-Y	5	123
Ø 7 GREEN	26	C4-24	24	10	10-G	7	124
Ø6 D.WALK	27	C4-25	25	6	9-DW	3	119
Ø 6 WALK	28	C4-26	26	10	9-W	7	121
Ø 6 RED	29	C4-27	27	6	8-R	3	134
Ø6 YELLOW	30	C4-28	28	8	8-Y	5	135
Ø 6 GREEN	31	C4-29	29	10	8-G	7	136
Ø 5 RED	32	C4-30	30	6	7-R	3	131
Ø5 YELLOW	33	C4-31	31	8	7-Y	5	132
Ø 5 GREEN	34	C4-32	32	10	7-G	7	133
(A) TOD/DOW	35	C4-33	33	8	3-Y	5	114
(B) TOD/DOW	36	C4-34	34	8	9-Y	5	120
(C)TOD/DOW	37	C4-35	35	8	6-Y	5	105
(D)TOD/DOW	38	C4-36	36	8	12-Y	5	111

Program Assigned Functions	C1 Connector		Input Files		
			Terminals		Field Terminals
	Pin	Termination	Out	In	
Ø2 DET,E&C	39	I2-1	F	D&E	TB2-5&6
Ø6 DET,E&C	40	J2-1	F	D&E	TB3-5&6
Ø4 DET,E&C	41	I6-1	F	D&E	TB4-9&10
Ø8 DET,E&C	42	J6-1	F	D&E	TB5-9&10
Ø2 DET,E&C	43	I2-2	W	J&K	TB2-7&8
Ø 6 DET,E&C	44	J2-2	W	J&K	TB3-7&8
Ø4 DET,E&C	45	I6-2	W	J&K	TB4-11&12
Ø8 DET,E&C	46	J6-2	W	J&K	TB5-11&12
Ø2 DET, C	47	I4-1&2	F&W	DE&JK	TB4-1,2&3,4
Ø6DET, C	48	J4-1&2	F&W	DE&JK	TB5-1,2&3,4
Ø4 DET, C	49	I8-1&2	F&W	DE&JK	TB6-5,6&7,8
Ø8 DET, C	50	J8-1&2	F&W	DE&JK	TB7-5,6&7,8
PED INHIBIT	51	–	–	–	TB9-10
RR Preempt	52	–	–	–	TB9-11
ADV ENABLE	53	–	–	–	TB8-2
NOT ASSIGN	54	J11-1	F	D	TB9-1
Ø5 DET,E&C	55	J1-1&2	F&W	DE&JK	TB3-1,2&3,4
Ø 1 DET,E&C	56	I1-1&2	F&W	DE&JK	TB2-1,2&3,4
Ø7 DET,E&C	57	J5-1&2	F&W	DE&JK	TB5-5,6&7,8
Ø3 DET,E&C	58	I5-1&2	F&W	DE&JK	TB4-5,6&7,8
Ø5 DET,E&C	59	J9-1	F	D&E	TB7-9&10
Ø 1 DET,E&C	60	I9-1	F	D&E	TB6-9&10
Ø 7 DET,E&C	61	J9-2	W	J&K	TB7-11&12
Ø 3 DET,E&C	62	I9-2	W	J&K	TB6-11&12
Ø2 DET,E&C	63	I3-1	F	D&E	TB2-9&10
Ø6 DET,E&C	64	J3-1	F	D&E	TB3-9&10
Ø4 DET,E&C	65	I7-1	F	D&E	TB6-1&2
Ø 8 DET,E&C	66	J7-1	F	D&E	TB7-1&2
Ph 2 Ped	67	I12-1	F	D	TB8-4
Ph 6 Ped	68	I13-1	F	D	TB8-7
Ph 4 Ped	69	I12-2	W	J	TB8-5
Ph 8 Ped	70	I13-2	W	J	TB8-8
EVA	71	J12-1	F	D	TB9-4
EVB	72	J13-1	F	D	TB9-7
EVC	73	J12-2	W	J	TB9-5
EVD	74	J13-2	W	J	TB9-8
NOT ASSIGN	75	J11-2	W	J	–
Ø2 DET, E	76	I3-2	W	J&K	TB2-11&12
Ø6 DET, E	77	J3-2	W	J&K	TB3-11&12
Ø4 DET, E	78	I7-2	W	J&K	TB6-3&4
Ø8 DET, E	79	J7-2	W	J&K	TB7-3&4
Advance	80	–	–	–	TB8-1
Flash Sense	81	–	–	–	TB8-10
Stop Time	82	–	–	–	TB8-11

Program Assigned Functions	C1 Connector		C5 Connector				Field Term.
	Pin	Termination	Pin	Switch Pack			
				In	Position	Out	
Ø3 D.WALK	83	C5-1	1	6	A6-DW	3	A104
Ø3 WALK	84	C5-2	2	10	A6-W	7	A106
OLD RED	85	C5-3	3	6	A5-R	3	A101
OLD YELLOW	86	C5-4	4	8	A5-Y	5	A102
OLD GREEN	87	C5-5	5	10	A5-G	7	A103
OLC RED	88	C5-6	6	6	A4-R	3	A114
OLC YELLOW	89	C5-7	7	8	A4-Y	5	A115
OLC GREEN	90	C5-8	8	10	A4-G	7	A116
Ø1 D.WALK	91	C5-9	9	6	A3-DW	3	A111
DC Gnd	92	DC Gnd Bus	–	–	–	–	–
Ø1 WALK	93	C5-10	10	10	A3-W	7	A113
OLB RED	94	C5-11	11	6	A2-R	3	A124
OLB YELLOW	95	C5-12	12	8	A2-Y	5	A125
OLB GREEN	96	C5-13	13	10	A2-G	7	A126
OLA RED	97	C5-14	14	6	A1-R	3	A121
OLA YELLOW	98	C5-15	15	8	A1-Y	5	A122
OLA GREEN	99	C5-16	16	10	A1-G	7	A123
NOT ASSIGN	100	C5-17	17	8	A6-Y	5	A105
NOT ASSIGN	101	C5-18	18	8	A3-Y	5	A112

FLASH OUT	102	T15-3"I"					
Watchdog	103	C4-37	Monitor-Pin 22				
Input Gnd	104	T15-4"J"					
			19	–	NC	–	–
			20	–	NC	–	–
			21	–	NC	–	–
			22	–	NC	–	–
			23	–	NC	–	–
			24	TB1-1	All	9	+24VDC

CONFLICT MONITOR – TYPICAL CONNECTOR PIN ASSIGNMENTS

Term	Function	Pin
130	SP2-G	1
115	SP3-W	2
135	SP8-Y	3
103	SP5-G	4
106	SP6-W	5
108	SP-11Y	6
133	SP7-G	7
114	SP3-Y	8
126	SP1-Y	9
124	SP10-G	10
105	SP6-Y	11
117	SP4-Y	12
A123	ASP1-G	13
–	NC	14
–	T&B	15
–	T&B	16
–	NC	17
–	T&B	18
–	NC	19
TB01-9	EQ Gnd	20
TB01-10	AC-	21
C4-37	Watch Dog	22
TB02-1	+24VDC	23
LRColL	Interlock	24
TB02-2	Interlock	25
–	NC	26
–	NC	27
TB01-11	Norm. Closed	28

CHANNEL ASSIGNMENTS (TYPICAL)

Ch	PH
1	1
2	2
3	3
4	4
5	5
6	6
7	7
8	8
9	OLA, Ø1FYA/YA
10	OLB, Ø3FYA/YA
11	OLC, Ø5FYA/YA
12	OLD, Ø7FYA/YA
13	2PED
14	4PED
15	6PED
16	8PED

T&B= Tied & Bundled

Pin	Function	Term
A	SP2-Y	129
B	SP8-G	136
C	SP9-W	121
D	SP5-Y	102
E	SP11-G	109
F	SP12-W	112
H	SP7-Y	132
J	SP1-G	127
K	SP9-Y	120
L	SP10-Y	123
M	SP4-G	118
N	SP12-Y	111
P	NC	–
R	ASP2-G	A126
S	ASP4-G	A116
T	NC	–
U	T&B	–
V	ASP5-G	A103
W	NC	–
X	NC	–
Y	DC Gnd	TB02-2
Z	Ext. Reset	TB02-5
AA	T&B	–
BB	Stop Time	TB02-3
CC	NC	–
DD	NC	–
EE	Clapper	TB01-12
FF	AC+	TB01-11

CONFLICT MONITOR – TYPICAL WIRING

MODEL 200 LOAD SWITCH (TYPICAL)

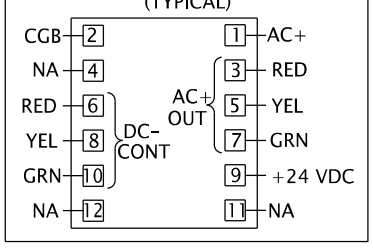

MODEL 204 FLASHER (TYPICAL)

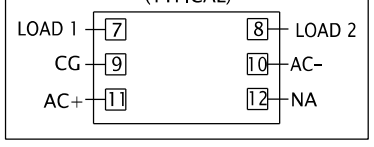

INTERSECTION: Main Street @ Cross Street Any Town

HWY#: XXX M.P.#: XXX.XX TSSU ID#: XXXXX

SHEET 3

332_SDLC_cabinet_11X17.dgn :: Default 7/16/2020 12:46:57 PM hwym26p

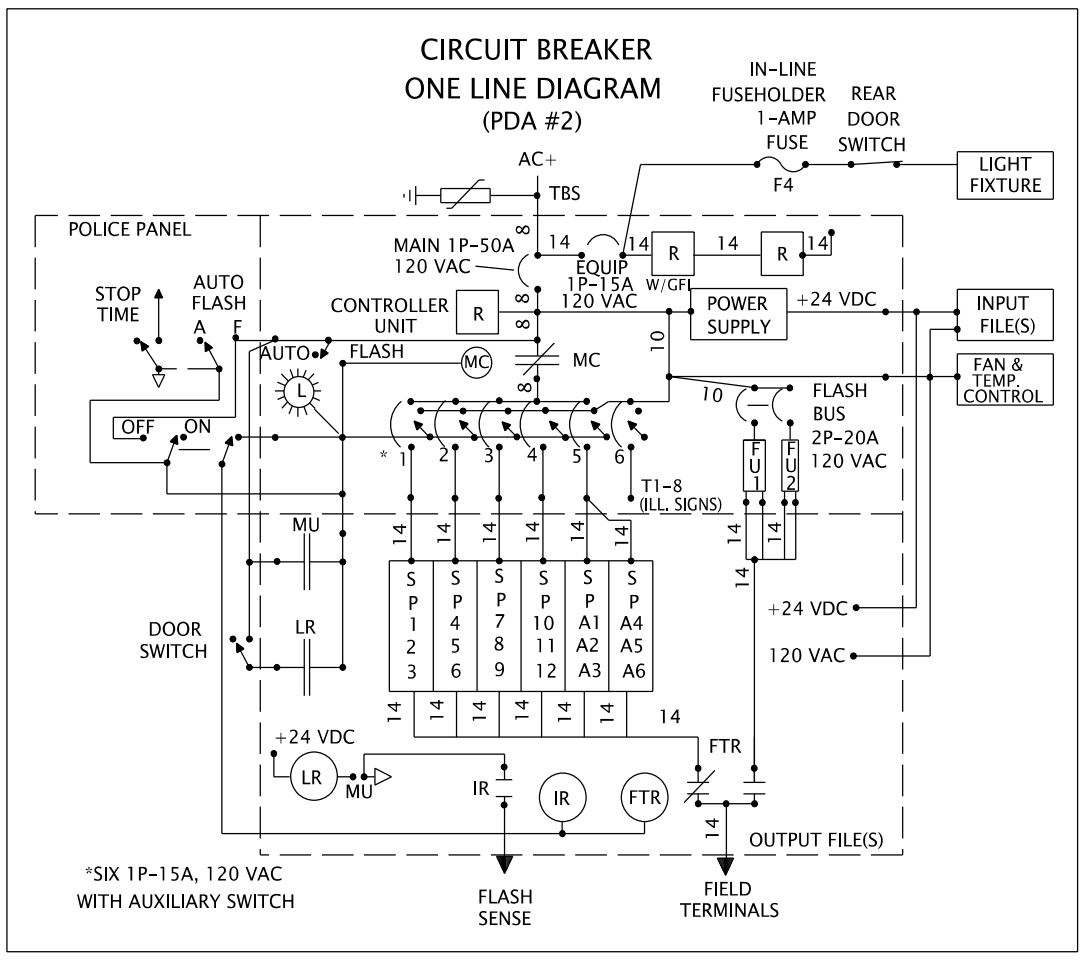

- SURGE PROTECTORS
- TBS — TERMINAL BLOCK-SERVICE
- EQUIPMENT GROUND
- PDA — POWER DISTRIBUTION ASSEMBLY
- 8 — WIRE SIZE, IF NOT INDICATED SHALL BE # 14 AWG
- CIRCUIT BREAKER
- R — DUPLEX RECEPTACLE
- W/GFI — WITH GROUND FAULT INTERRUPTER
- RELAY CONTACT, NORMALLY CLOSED
- RELAY CONTACT, NORMALLY OPEN
- MC — MERCURY CONTACTOR
- RELAY COIL-* RELAY NAME
- DC GROUND
- FU1 — FLASHER UNIT ONE
- FR — FLASH RELAY
- WDT — WATCHDOG TIMER
- FTR — FLASH TRANSFER RELAY
- L — PDA FLASH ON DISPLAY LAMP
- DR SW — DOOR SWITCH, SHOWN WITH DOOR OPEN
- CB-1 — SIGNAL CIRCUIT BREAKER 1 (SECONDARY)
- TR — TRANSFER RELAY
- IR — ISOLATION RELAY
- LR — LOGIC RELAY
- IFI-14D — INPUT FILE "I", TERM BLOCK "14", POSITION "D"

INPUT FILE - TYPICAL WIRING DETAILS

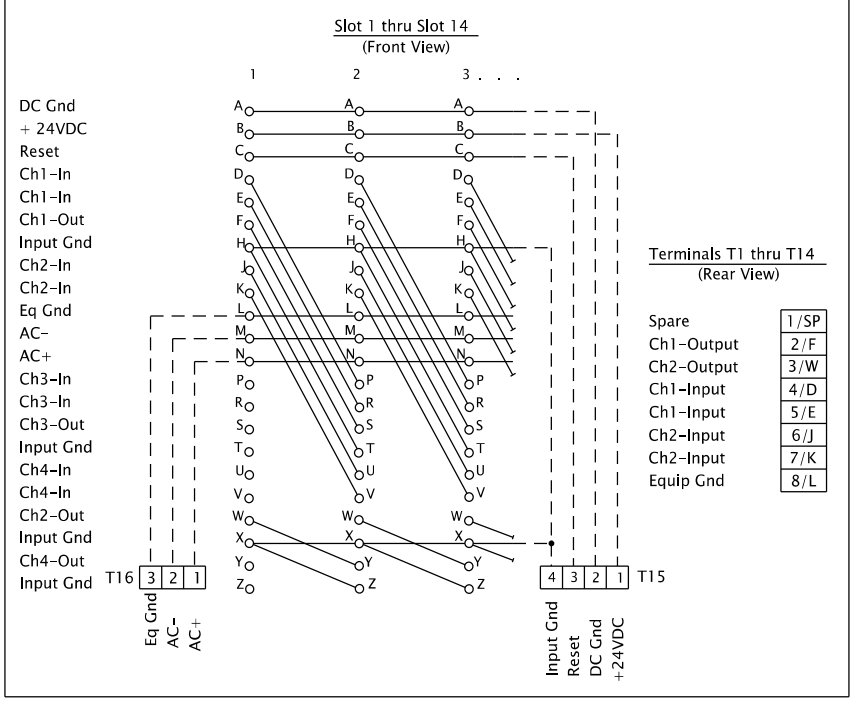

OUTPUT FILE - TYPICAL WIRING DETAILS

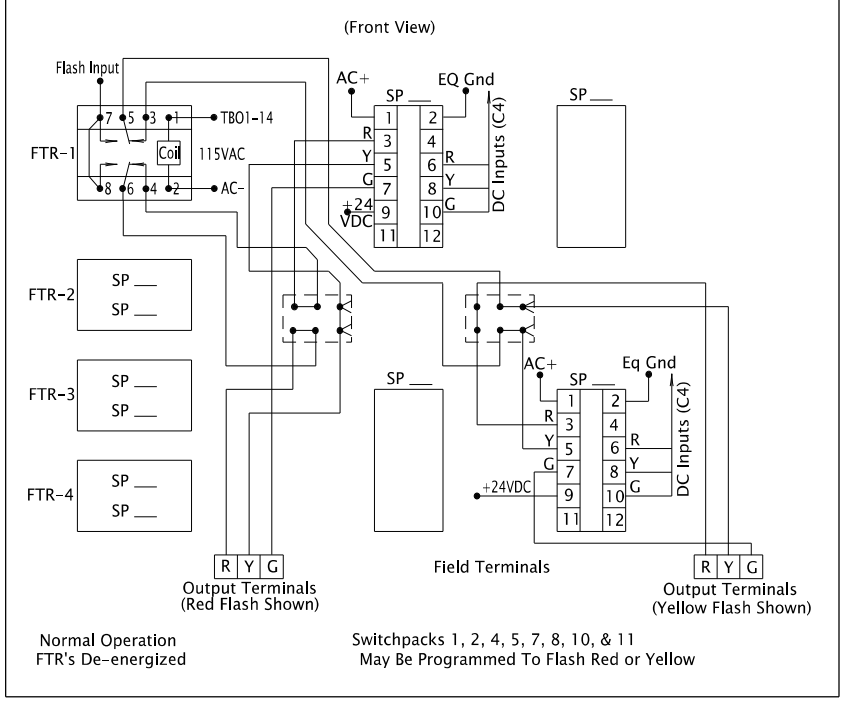

RAILROAD INTERCONNECT WIRING (TYPICAL)

Use #12 AWG wire
for either option

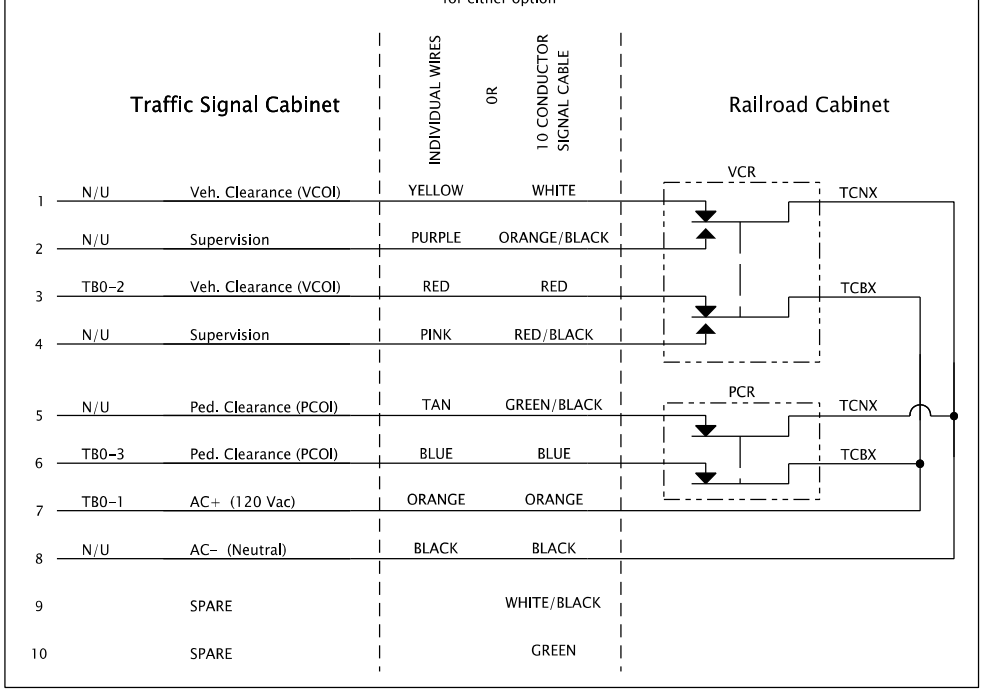

LOGIC RELAY

(Front View)

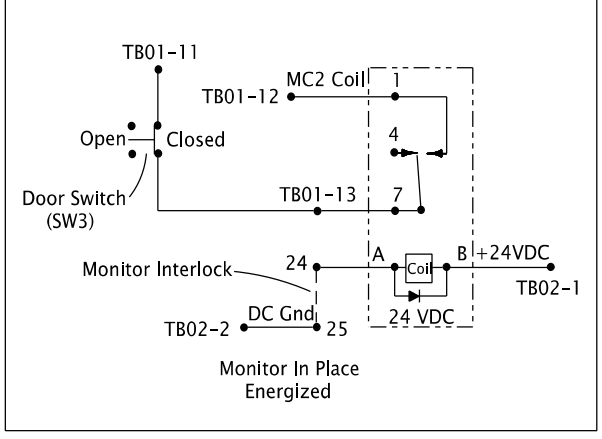

ISOLATION RELAY

(Front View)

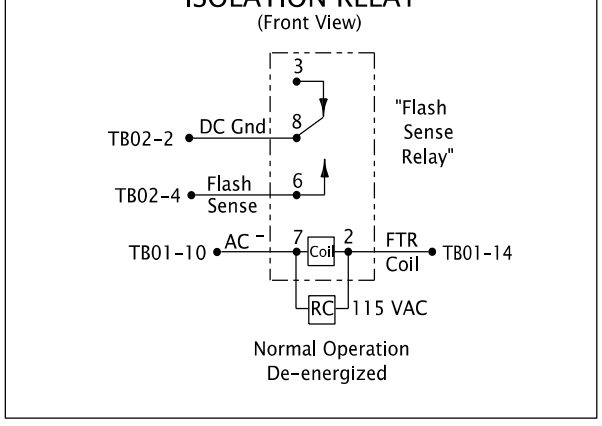

DETECTOR TEST PANEL

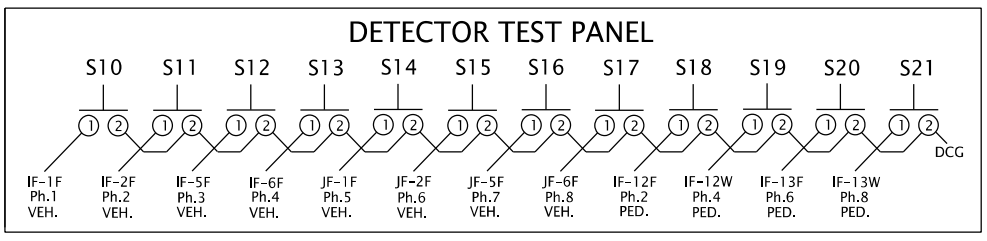

INTERSECTION: Main Street @ Cross Street, Any Town

HWY#: XXX M.P.#: XXX.XX TSSU ID#: XXXXX

SHEET 4

332_SDLC_cabinet_11X17.dgn :: Default 7/16/2020 12:46:57 PM hwym26p

INTERSECTION:

Main Street @

Cross Street

Any Town

HWY#: XXX M.P.#: XXX.XX TSSU ID#: XXXXX

Place Intersection Diagram, phase and Fire rotations,
and any other applicable information on this sheet.
See Examples At Right Of Cabinet Print For Sheet 5.

SHEET 5

Place Detection Diagram Per Instructions. See Examples At Right Of Cabinet Print For Sheet 6. Place any other applicable information on this sheet.

INTERSECTION: Main Street @ Cross Street Any Town

HWY#: XXX M.P.#: XXX.XX TSSU ID#: XXXXX

SHEET 6

Have Agency Signal Techs or Electricians Verify the Diode Card Information If You Are Not Sure.

NOTE:
1. FILL IN CHANNEL ASSIGNMENTS WITH PHASING. Ch.1 Ph 1,Ph 5,OLA,Ped 2,NU
2. REMOVE YELLOW INHIBIT JUMPERS AS NEEDED.
3. REMOVE DIODES FOR ALLOWED PHASING.
4. PLACE CIRCLE AROUND REMOVED DIODES.

CONFLICT MONITOR DIODE CARD

CHANNEL ASSIGNMENT

Ch.1	Ph 1	Ch.5	Ph 5	Ch.9	Ph 3 FYA/YA	Ch.13	Ped 2
Ch.2	Ph 2	Ch.6	Ph 6	Ch.10	NU	Ch.14	Ped 4
Ch.3	Ph 3	Ch.7	Ph 7	Ch.11	NU	Ch.15	Ped 6
Ch.4	Ph 4	Ch.8	Ph 8	Ch.12	PH 7 FYA/YA	Ch.16	Ped8

YELLOW INHIBIT JUMPERS

1	2	3	4	5	6	7	8
9	10	11	12	13	14	15	16

DIODES - Diode Removed Makes Movement Allowable (Diode IN4148)

1-2	2-3	3-4	4-5	5-6	6-7	7-8	8-9
1-3	2-4	3-5	4-6	5-7	6-8	7-9	8-10
1-4	2-5	3-6	4-7	5-8	6-9	7-10	8-11
1-5	2-6	3-7	4-8	5-9	6-10	7-11	8-12
1-6	2-7	3-8	4-9	5-10	6-11	7-12	8-13
1-7	2-8	3-9	4-10	5-11	6-12	7-13	8-14
1-8	2-9	3-10	4-11	5-12	6-13	7-14	8-15
1-9	2-10	3-11	4-12	5-13	6-14	7-15	8-16
1-10	2-11	3-12	4-13	5-14	6-15	7-16	9-16
1-11	2-12	3-13	4-14	5-15	6-16	10-16	9-15
1-12	2-13	3-14	4-15	5-16	11-16	10-15	9-14
1-13	2-14	3-15	4-16	12-16	11-15	10-14	9-13
1-14	2-15	3-16	13-16	12-15	11-14	10-13	9-12
1-15	2-16	14-16	13-15	12-14	11-13	10-12	9-11
1-16	15-16	14-15	13-14	12-13	11-12	10-11	9-10

INTERSECTION: Main Street @ Cross Street Any Town
HWY#: XXX M.P.#: XXX.XX TSSU ID#: XXXXX

SHEET 7