## POLICE PANEL
(Side View)

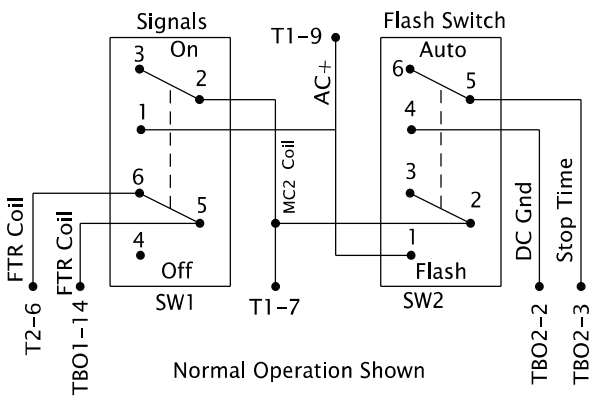


## SERVICE PANEL

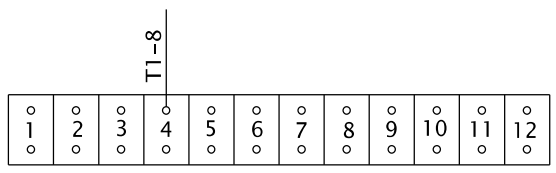


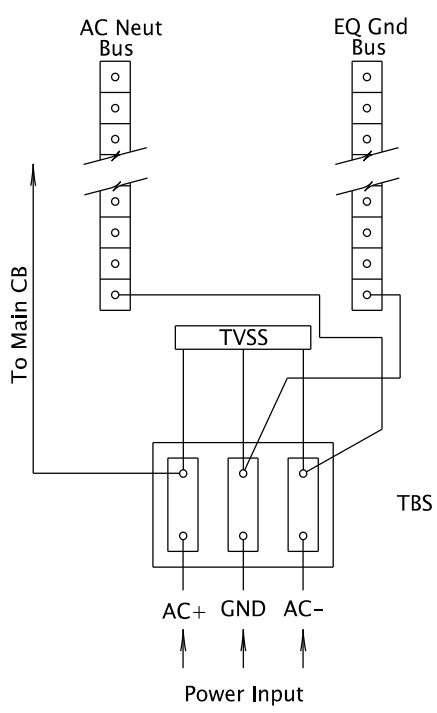


## FRONT VIEW (TYPICAL)

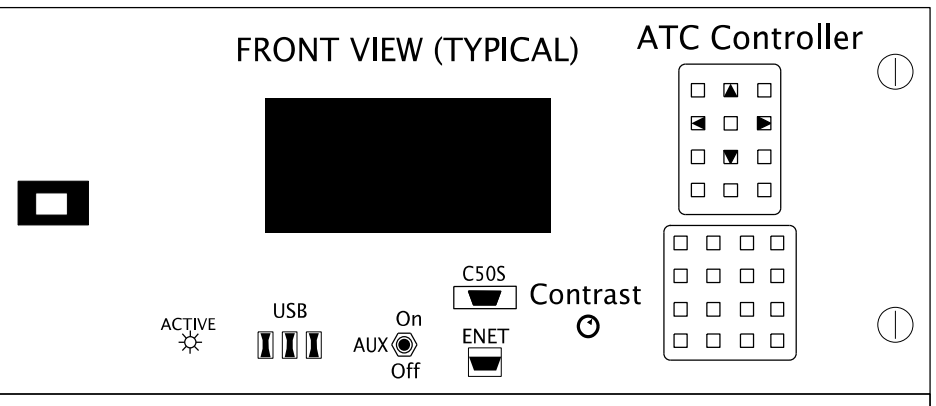


Model ATC Controller

## DRAWER

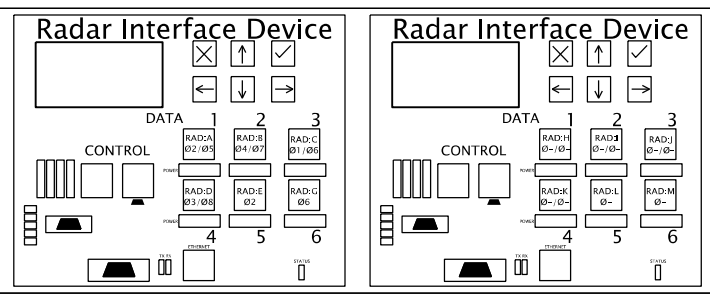


Radar Interface

Channel 1
Input File "I"
Channel 2

IMPORT INPUT FILE FROM THE DETECTION CONFIGURATION EXCEL FILE AFTER SIGNAL TIMER HAS FINISHED CONFIGURATION – RESIZE TO FIT THIS DASHED AREA

Channel 1
Input File "J"
Channel 2

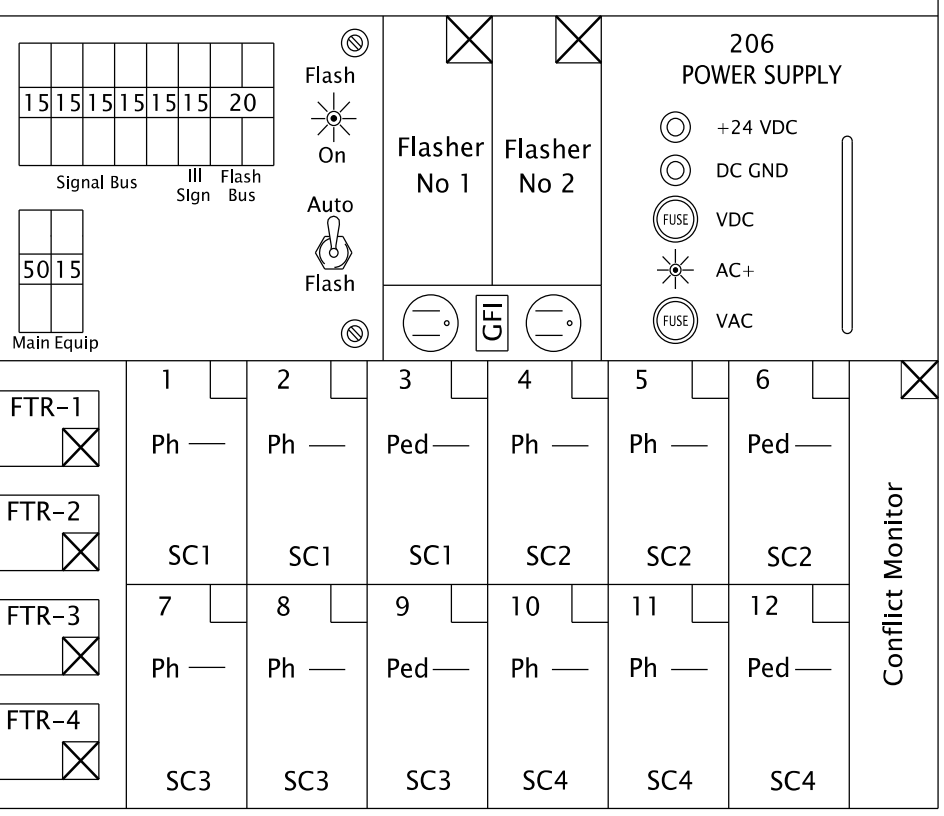


Power Distribution Assembly #2

Output File

SHEET 1

| REV. NO. | DATE | INITIAL | REMARKS |
|---|---|---|---|
| 1 | 03/22 | JS | UPDATED 752'S TO 762'S |
| | 01/23 | JS | ADD AUX. FILE YELLOW ASSIGN. TO CMU. |
| 2 | 05/24 | BG | ADDED FLIR POWER SUPPLY LEVEL |
| 3 | | | |

INTERSECTION: Main Street @ Cross Street Any Town

HWY#: XXX M.P.#: XXX.XX TSSU ID#: XXXXX

OREGON DEPARTMENT OF TRANSPORTATION
TRAFFIC – ROADWAY SECTION

332 CABINET WIRING DIAGRAM

REV 05/17/24

Rotation: 90° Scale: 1"=100'

332_SDLC_cabinet_11X17.dgn :: Default 5/17/2024 11:04:25 AM hwyr23w

# TrippLite Power Protection Surge

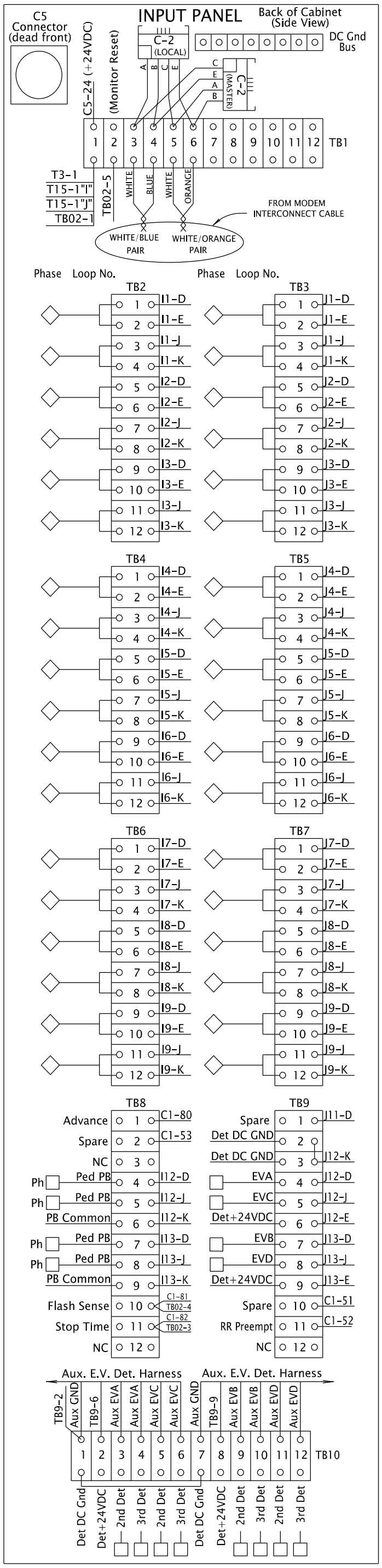


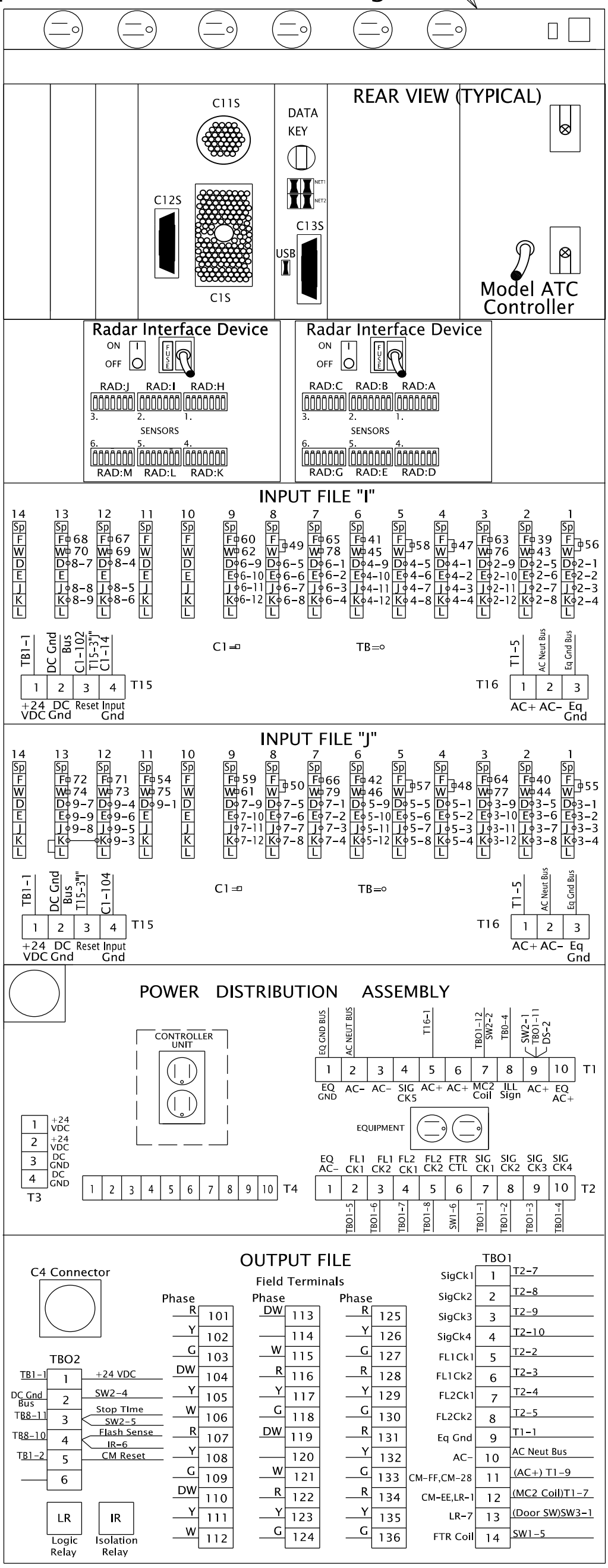


INTERSECTION: Main Street @ Cross Street Any Town

HWY#: XXX M.P.#: XXX.XX TSSU ID#: XXXXX

SHEET 2

Rotation: 90° Scale: 1"=100'

332_SDLC_cabinet_11X17.dgn :: Default 5/17/2024 11:04:26 AM hwyr23w

# PROGRAM PIN ASSIGNMENTS

| Program Assigned Functions | C1 Connector | | C4 Connector | | | | Field Term. |
|---|---|---|---|---|---|---|---|
| | Pin | Termination | Pin | Switch Pack | | | |
| | | | | In | Position | Out | |
| DC Gnd | 1 | DC Gnd Bus | – | – | – | – | – |
| Ø4 D.WALK | 2 | C4-1 | 1 | 6 | 6-DW | 3 | 104 |
| Ø4 WALK | 3 | C4-2 | 2 | 10 | 6-W | 7 | 106 |
| Ø4 RED | 4 | C4-3 | 3 | 6 | 5-R | 3 | 101 |
| Ø4 YELLOW | 5 | C4-4 | 4 | 8 | 5-Y | 5 | 102 |
| Ø4 GREEN | 6 | C4-5 | 5 | 10 | 5-G | 7 | 103 |
| Ø 3 RED | 7 | C4-6 | 6 | 6 | 4-R | 3 | 116 |
| Ø3 YELLOW | 8 | C4-7 | 7 | 8 | 4-Y | 5 | 117 |
| Ø3 GREEN | 9 | C4-8 | 8 | 10 | 4-G | 7 | 118 |
| Ø2 D.WALK | 10 | C4-9 | 9 | 6 | 3-DW | 3 | 113 |
| Ø2 WALK | 11 | C4-10 | 10 | 10 | 3-W | 7 | 115 |
| 2 RED | 12 | C4-11 | 11 | 6 | 2-R | 3 | 128 |
| 2 YELLOW | 13 | C4-12 | 12 | 8 | 2-Y | 5 | 129 |
| Input Gnd | 14 | | – | – | – | – | – |
| Ø2 GREEN | 15 | C4-13 | 13 | 10 | 2-G | 7 | 130 |
| Ø1 RED | 16 | C4-14 | 14 | 6 | 1-R | 3 | 125 |
| Ø1 YELLOW | 17 | C4-15 | 15 | 8 | 1-Y | 5 | 126 |
| Ø1 GREEN | 18 | C4-16 | 16 | 10 | 1-G | 7 | 127 |
| Ø8 D.WALK | 19 | C4-17 | 17 | 6 | 12-DW | 3 | 110 |
| Ø 8 WALK | 20 | C4-18 | 18 | 10 | 12-W | 7 | 112 |
| Ø8 RED | 21 | C4-19 | 19 | 6 | 11-R | 3 | 107 |
| Ø8 YELLOW | 22 | C4-20 | 20 | 8 | 11-Y | 5 | 108 |
| Ø 8 GREEN | 23 | C4-21 | 21 | 10 | 11-G | 7 | 109 |
| Ø 7 RED | 24 | C4-22 | 22 | 6 | 10-R | 3 | 122 |
| Ø 7 YELLOW | 25 | C4-23 | 23 | 8 | 10-Y | 5 | 123 |
| Ø 7 GREEN | 26 | C4-24 | 24 | 10 | 10-G | 7 | 124 |
| Ø6 D.WALK | 27 | C4-25 | 25 | 6 | 9-DW | 3 | 119 |
| Ø 6 WALK | 28 | C4-26 | 26 | 10 | 9-W | 7 | 121 |
| Ø 6 RED | 29 | C4-27 | 27 | 6 | 8-R | 3 | 134 |
| Ø6 YELLOW | 30 | C4-28 | 28 | 8 | 8-Y | 5 | 135 |
| Ø 6 GREEN | 31 | C4-29 | 29 | 10 | 8-G | 7 | 136 |
| Ø 5 RED | 32 | C4-30 | 30 | 6 | 7-R | 3 | 131 |
| Ø5 YELLOW | 33 | C4-31 | 31 | 8 | 7-Y | 5 | 132 |
| Ø 5 GREEN | 34 | C4-32 | 32 | 10 | 7-G | 7 | 133 |
| (A) TOD/DOW | 35 | C4-33 | 33 | 8 | 3-Y | 5 | 114 |
| (B) TOD/DOW | 36 | C4-34 | 34 | 8 | 9-Y | 5 | 120 |
| (C)TOD/DOW | 37 | C4-35 | 35 | 8 | 6-Y | 5 | 105 |
| (D)TOD/DOW | 38 | C4-36 | 36 | 8 | 12-Y | 5 | 111 |

| Program Assigned Functions | C1 Connector | | Input Files | | |
|---|---|---|---|---|---|
| | | | Terminals | | Field Terminals |
| | Pin | Termination | Out | In | |
| Ø2 DET,E&C | 39 | I2-1 | F | D&E | TB2-5&6 |
| Ø6 DET,E&C | 40 | J2-1 | F | D&E | TB3-5&6 |
| Ø4 DET,E&C | 41 | I6-1 | F | D&E | TB4-9&10 |
| Ø8 DET,E&C | 42 | J6-1 | F | D&E | TB5-9&10 |
| Ø2 DET,E&C | 43 | I2-2 | W | J&K | TB2-7&8 |
| Ø 6 DET,E&C | 44 | J2-2 | W | J&K | TB3-7&8 |
| Ø4 DET,E&C | 45 | I6-2 | W | J&K | TB4-11&12 |
| Ø8 DET,E&C | 46 | J6-2 | W | J&K | TB5-11&12 |
| Ø2 DET, C | 47 | I4-1&2 | F&W | DE&JK | TB4-1,2&3,4 |
| Ø6DET, C | 48 | J4-1&2 | F&W | DE&JK | TB5-1,2&3,4 |
| Ø4 DET, C | 49 | I8-1&2 | F&W | DE&JK | TB6-5,6&7,8 |
| Ø8 DET, C | 50 | J8-1&2 | F&W | DE&JK | TB7-5,6&7,8 |
| PED INHIBIT | 51 | – | – | – | TB9-10 |
| RR Preempt | 52 | – | – | – | TB9-11 |
| ADV ENABLE | 53 | – | – | – | TB8-2 |
| NOT ASSIGN | 54 | J11-1 | F | D | TB9-1 |
| Ø5 DET,E&C | 55 | J1-1&2 | F&W | DE&JK | TB3-1,2&3,4 |
| Ø1 DET,E&C | 56 | I1-1&2 | F&W | DE&JK | TB2-1,2&3,4 |
| Ø7 DET,E&C | 57 | J5-1&2 | F&W | DE&JK | TB5-5,6&7,8 |
| Ø3 DET,E&C | 58 | I5-1&2 | F&W | DE&JK | TB4-5,6&7,8 |
| Ø5 DET,E&C | 59 | J9-1 | F | D&E | TB7-9&10 |
| Ø1 DET,E&C | 60 | I9-1 | F | D&E | TB6-9&10 |
| Ø7 DET,E&C | 61 | J9-2 | W | J&K | TB7-11&12 |
| Ø 3 DET,E&C | 62 | I9-2 | W | J&K | TB6-11&12 |
| Ø2 DET,E&C | 63 | I3-1 | F | D&E | TB2-9&10 |
| Ø6 DET,E&C | 64 | J3-1 | F | D&E | TB3-9&10 |
| Ø4 DET,E&C | 65 | I7-1 | F | D&E | TB6-1&2 |
| Ø 8 DET,E&C | 66 | J7-1 | F | D&E | TB7-1&2 |
| Ph 2 Ped | 67 | I12-1 | F | D | TB8-4 |
| Ph 6 Ped | 68 | I13-1 | F | D | TB8-7 |
| Ph 4 Ped | 69 | I12-2 | W | J | TB8-5 |
| Ph 8 Ped | 70 | I13-2 | W | J | TB8-8 |
| EVA | 71 | J12-1 | F | D | TB9-4 |
| EVB | 72 | J13-1 | F | D | TB9-7 |
| EVC | 73 | J12-2 | W | J | TB9-5 |
| EVD | 74 | J13-2 | W | J | TB9-8 |
| NOT ASSIGN | 75 | J11-2 | W | J | – |
| Ø2 DET, E | 76 | I3-2 | W | J&K | TB2-11&12 |
| Ø6 DET, E | 77 | J3-2 | W | J&K | TB3-11&12 |
| Ø4 DET, E | 78 | I7-2 | W | J&K | TB6-3&4 |
| Ø8 DET, E | 79 | J7-2 | W | J&K | TB7-3&4 |
| Advance | 80 | – | – | – | TB8-1 |
| Flash Sense | 81 | – | – | – | TB8-10 |
| Stop Time | 82 | – | – | – | TB8-11 |

| Program Assigned Functions | C1 Connector | | C5 Connector | | | | Field Term. |
|---|---|---|---|---|---|---|---|
| | Pin | Termination | Pin | Switch Pack | | | |
| | | | | In | Position | Out | |
| Ø3 D.WALK | 83 | C5-1 | 1 | 6 | A6-DW | 3 | A104 |
| Ø3 WALK | 84 | C5-2 | 2 | 10 | A6-W | 7 | A106 |
| OLD RED | 85 | C5-3 | 3 | 6 | A5-R | 3 | A101 |
| OLD YELLOW | 86 | C5-4 | 4 | 8 | A5-Y | 5 | A102 |
| OLD GREEN | 87 | C5-5 | 5 | 10 | A5-G | 7 | A103 |
| OLC RED | 88 | C5-6 | 6 | 6 | A4-R | 3 | A114 |
| OLC YELLOW | 89 | C5-7 | 7 | 8 | A4-Y | 5 | A115 |
| OLC GREEN | 90 | C5-8 | 8 | 10 | A4-G | 7 | A116 |
| Ø1 D.WALK | 91 | C5-9 | 9 | 6 | A3-DW | 3 | A111 |
| DC Gnd | 92 | DC Gnd Bus | – | – | – | – | – |
| Ø1 WALK | 93 | C5-10 | 10 | 10 | A3-W | 7 | A113 |
| OLB RED | 94 | C5-11 | 11 | 6 | A2-R | 3 | A124 |
| OLB YELLOW | 95 | C5-12 | 12 | 8 | A2-Y | 5 | A125 |
| OLB GREEN | 96 | C5-13 | 13 | 10 | A2-G | 7 | A126 |
| OLA RED | 97 | C5-14 | 14 | 6 | A1-R | 3 | A121 |
| OLA YELLOW | 98 | C5-15 | 15 | 8 | A1-Y | 5 | A122 |
| OLA GREEN | 99 | C5-16 | 16 | 10 | A1-G | 7 | A123 |
| NOT ASSIGN | 100 | C5-17 | 17 | 8 | A6-Y | 5 | A105 |
| NOT ASSIGN | 101 | C5-18 | 18 | 8 | A3-Y | 5 | A112 |

| | | | | | | | |
|---|---|---|---|---|---|---|---|
| FLASH OUT | 102 | T15-3"I" | | | | | |
| Watchdog | 103 | C4-37 | Monitor-Pin 22 | | | | |
| Input Gnd | 104 | T15-4"J" | | | | | |
| | | | 19 | – | NC | – | – |
| | | | 20 | – | NC | – | – |
| | | | 21 | – | NC | – | – |
| | | | 22 | – | NC | – | – |
| | | | 23 | – | NC | – | – |
| | | | 24 | TB1-1 | All | 9 | +24VDC |

## CONFLICT MONITOR – TYPICAL CONNECTOR PIN ASSIGNMENTS

| Term | Function | Pin |
|---|---|---|
| 130 | SP2-G | 1 |
| 115 | SP3-W | 2 |
| 135 | SP8-Y | 3 |
| 103 | SP5-G | 4 |
| 106 | SP6-W | 5 |
| 108 | SP-11Y | 6 |
| 133 | SP7-G | 7 |
| 114 | SP3-Y | 8 |
| 126 | SP1-Y | 9 |
| 124 | SP10-G | 10 |
| 105 | SP6-Y | 11 |
| 117 | SP4-Y | 12 |
| A123 | ASP1-G | 13 |
| – | NC | 14 |
| A115 | ASP4-Y | 15 |
| A122 | ASP1-Y | 16 |
| – | NC | 17 |
| A102 | ASP5-Y | 18 |
| – | NC | 19 |
| TB01-9 | EQ Gnd | 20 |
| TB01-10 | AC- | 21 |
| C4-37 | Watch Dog | 22 |
| TB02-1 | +24VDC | 23 |
| LRCoIL | Interlock | 24 |
| TB02-2 | Interlock | 25 |
| – | NC | 26 |
| – | NC | 27 |
| TB01-11 | Norm. Closed | 28 |

CHANNEL ASSIGNMENTS (TYPICAL)

| Ch | PH |
|---|---|
| 1 | 1 |
| 2 | 2 |
| 3 | 3 |
| 4 | 4 |
| 5 | 5 |
| 6 | 6 |
| 7 | 7 |
| 8 | 8 |
| 9 | OLA, Ø1FYA/YA |
| 10 | OLB, Ø3FYA/YA |
| 11 | OLC, Ø5FYA/YA |
| 12 | OLD, Ø7FYA/YA |
| 13 | 2PED |
| 14 | 4PED |
| 15 | 6PED |
| 16 | 8PED |

T&B= Tied & Bundled

| Pin | Function | Term |
|---|---|---|
| A | SP2-Y | 129 |
| B | SP8-G | 136 |
| C | SP9-W | 121 |
| D | SP5-Y | 102 |
| E | SP11-G | 109 |
| F | SP12-W | 112 |
| H | SP7-Y | 132 |
| J | SP1-G | 127 |
| K | SP9-Y | 120 |
| L | SP10-Y | 123 |
| M | SP4-G | 118 |
| N | SP12-Y | 111 |
| P | NC | – |
| R | ASP2-G | A126 |
| S | ASP4-G | A116 |
| T | NC | – |
| U | ASP2-Y | A125 |
| V | ASP5-G | A103 |
| W | NC | – |
| X | NC | – |
| Y | DC Gnd | TB02-2 |
| Z | Ext. Reset | TB02-5 |
| AA | T&B | – |
| BB | Stop Time | TB02-3 |
| CC | NC | – |
| DD | NC | – |
| EE | Clapper | TB01-12 |
| FF | AC+ | TB01-11 |

## CONFLICT MONITOR – TYPICAL WIRING

MODEL 200 LOAD SWITCH (TYPICAL)

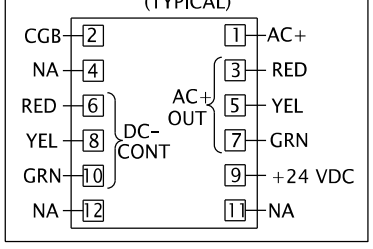


MODEL 204 FLASHER (TYPICAL)

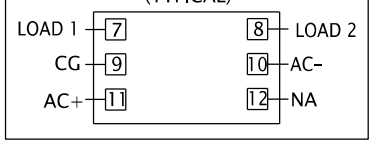


INTERSECTION: Main Street @ Cross Street Any Town

HWY#: XXX M.P.#: XXX.XX TSSU ID#: XXXXX

SHEET 3

Rotation: 90° Scale: 1"=100'
332_SDLC_cabinet_11X17.dgn :: Default 5/17/2024 11:04:26 AM hwyr23w

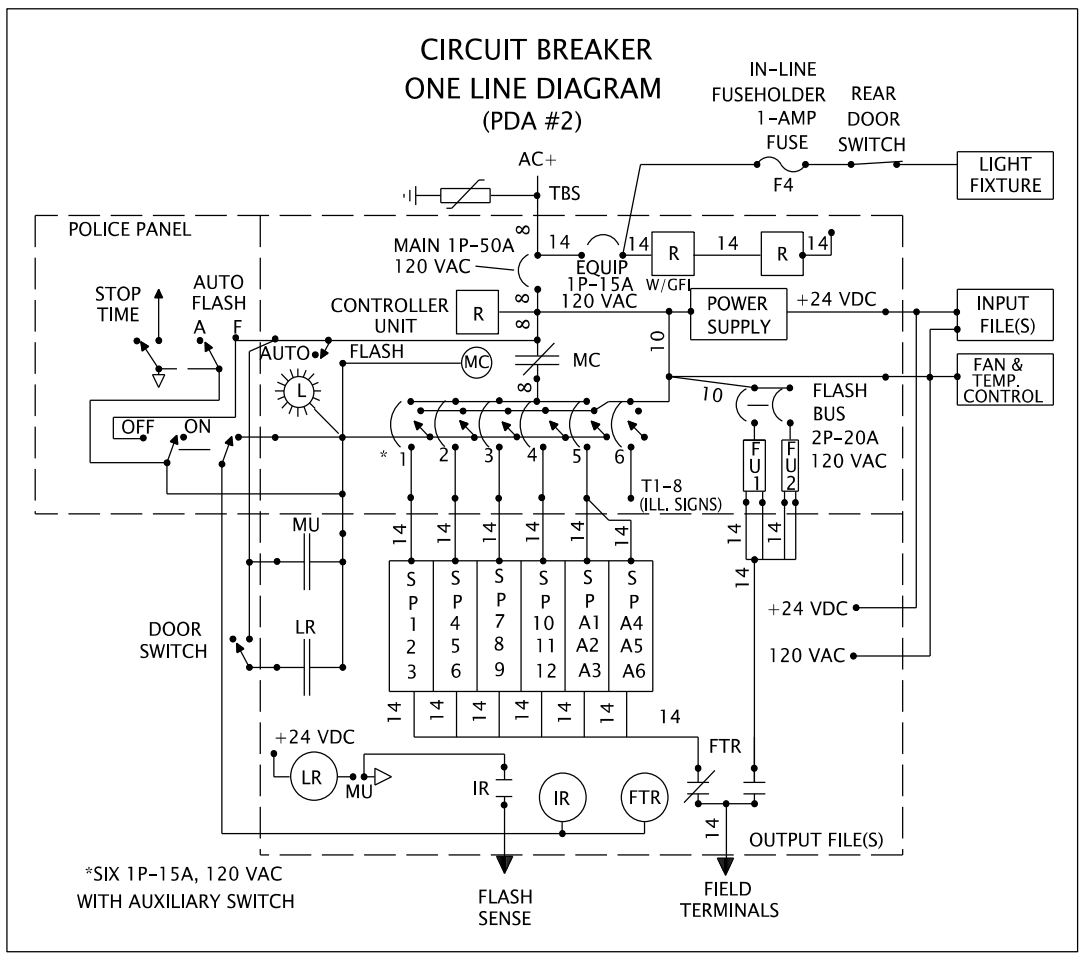


| | |
|---|---|
| | SURGE PROTECTORS |
| TBS | TERMINAL BLOCK-SERVICE |
| | EQUIPMENT GROUND |
| PDA | POWER DISTRIBUTION ASSEMBLY |
| 8 | WIRE SIZE, IF NOT INDICATED SHALL BE # 14 AWG |
| | CIRCUIT BREAKER |
| R | DUPLEX RECEPTACLE |
| W/GFI | WITH GROUND FAULT INTERRUPTER |
| | RELAY CONTACT, NORMALLY CLOSED |
| | RELAY CONTACT, NORMALLY OPEN |
| MC | MERCURY CONTACTOR |
| * | RELAY COIL-* RELAY NAME |
| | DC GROUND |
| FU1 | FLASHER UNIT ONE |
| FR | FLASH RELAY |
| WDT | WATCHDOG TIMER |
| FTR | FLASH TRANSFER RELAY |
| L | PDA FLASH ON DISPLAY LAMP |
| DR SW | DOOR SWITCH, SHOWN WITH DOOR OPEN |
| CB-1 | SIGNAL CIRCUIT BREAKER 1 (SECONDARY) |
| TR | TRANSFER RELAY |
| IR | ISOLATION RELAY |
| LR | LOGIC RELAY |
| IFI-14D | INPUT FILE "I", TERM BLOCK "14", POSITION "D" |

## INPUT FILE - TYPICAL WIRING DETAILS

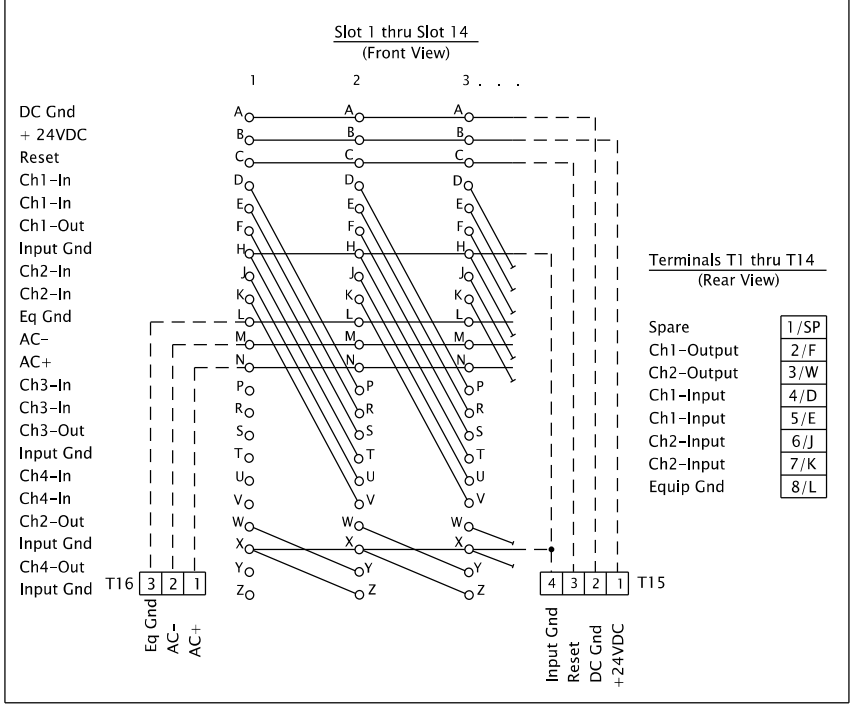


## OUTPUT FILE - TYPICAL WIRING DETAILS

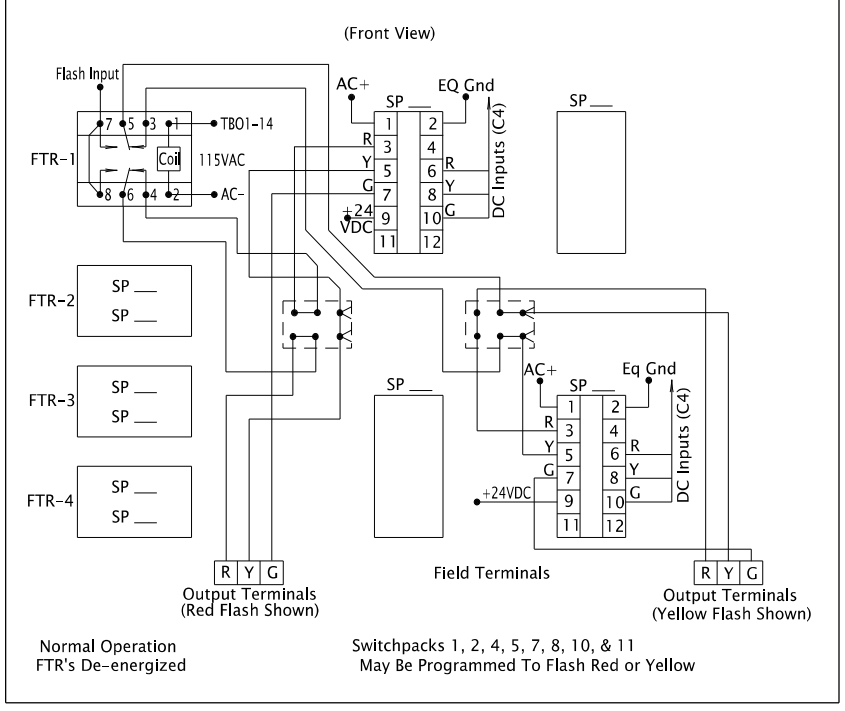


## RAILROAD INTERCONNECT WIRING (TYPICAL)

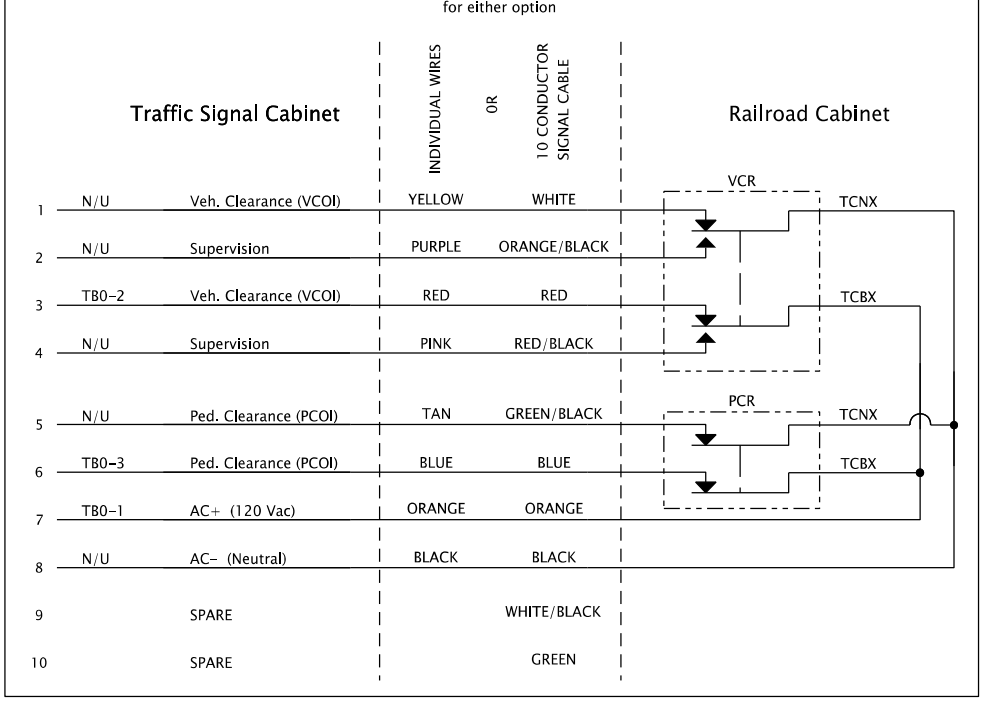


## LOGIC RELAY

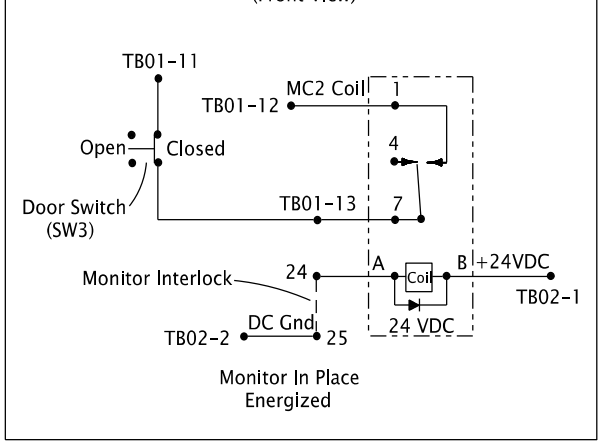


## ISOLATION RELAY

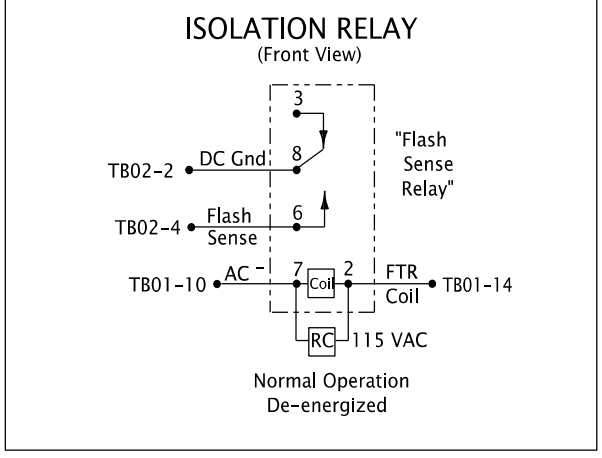


## DETECTOR TEST PANEL

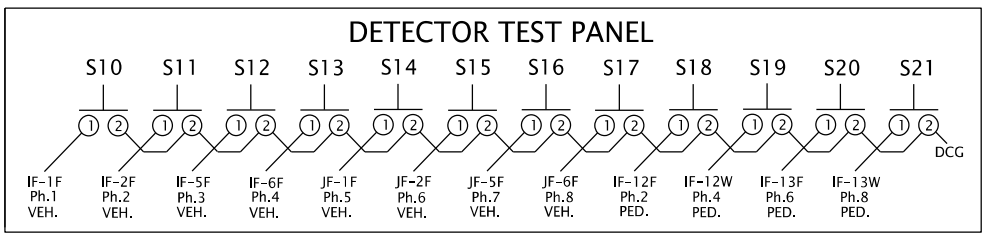


INTERSECTION: Main Street @ Cross Street Any Town

HWY#: XXX M.P.#: XXX.XX TSSU ID#: XXXXX

SHEET 4

Rotation: 90° Scale: 1"=100'

332_SDLC_cabinet_11X17.dgn :: Default 5/17/2024 11:04:26 AM hwyr23w

INTERSECTION: Main Street @ Cross Street Any Town

HWY#: XXX M.P.#: XXX.XX TSSU ID#: XXXXX

Place Intersection Diagram, phase and Fire rotations, and any other applicable information on this sheet. See Examples At Right Of Cabinet Print For Sheet 5.

SHEET 5

INTERSECTION: Main Street @ Cross Street Any Town

HWY#: XXX M.P.#: XXX.XX TSSU ID#: XXXXX

Place Detection Diagram Per Instructions. See Examples At Right Of Cabinet Print For Sheet 6. Place any other applicable information on this sheet.

SHEET 6

# Have Agency Signal Techs or Electricians Verify the Diode Card Information If You Are Not Sure.

REMOVE ALL INFORMATION
ABOVE DIODE CARD WHEN
PRINT IS COMPLETED

NOTE:
1. FILL IN CHANNEL ASSIGNMENTS WITH PHASING.
2. REMOVE YELLOW INHIBIT JUMPERS AS NEEDED.
3. REMOVE DIODES FOR ALLOWED PHASING.
4. PLACE SHAPE AROUND REMOVED DIODES.

Ch.1 Ph 1,Ph 5,OLA,Ped 2,NU

## CONFLICT MONITOR DIODE CARD

### CHANNEL ASSIGNMENT

| | | | |
|---|---|---|---|
| Ch.1 Ph 1 | Ch.5 Ph 5 | Ch.9 Ph 1 FYA/YA | Ch.13 Ped 2 |
| Ch.2 Ph 2 | Ch.6 Ph 6 | Ch.10 Ph 3 FYA/YA | Ch.14 Ped 4 |
| Ch.3 Ph 3 | Ch.7 Ph 7 | Ch.11 Ph 5 FYA/YA | Ch.15 Ped 6 |
| Ch.4 Ph 4 | Ch.8 Ph 8 | Ch.12 PH 7 FYA/YA | Ch.16 Ped8 |

### YELLOW INHIBIT JUMPERS

| | | | | | | | |
|---|---|---|---|---|---|---|---|
| 1 | 2 | 3 | 4 | 5 | 6 | 7 | 8 |
| 9 | 10 | 11 | 12 | 13 | 14 | 15 | 16 |

### DIODES - Diode Removed Makes Movement Allowable (Diode IN4148)

| | | | | | | | |
|---|---|---|---|---|---|---|---|
| 1-2 | 2-3 | 3-4 | 4-5 | 5-6 | 6-7 | 7-8 | 8-9 |
| 1-3 | 2-4 | 3-5 | 4-6 | 5-7 | 6-8 | 7-9 | 8-10 |
| 1-4 | 2-5 | 3-6 | 4-7 | 5-8 | 6-9 | 7-10 | 8-11 |
| 1-5 | 2-6 | 3-7 | 4-8 | 5-9 | 6-10 | 7-11 | 8-12 |
| 1-6 | 2-7 | 3-8 | 4-9 | 5-10 | 6-11 | 7-12 | 8-13 |
| 1-7 | 2-8 | 3-9 | 4-10 | 5-11 | 6-12 | 7-13 | 8-14 |
| 1-8 | 2-9 | 3-10 | 4-11 | 5-12 | 6-13 | 7-14 | 8-15 |
| 1-9 | 2-10 | 3-11 | 4-12 | 5-13 | 6-14 | 7-15 | 8-16 |
| 1-10 | 2-11 | 3-12 | 4-13 | 5-14 | 6-15 | 7-16 | 9-16 |
| 1-11 | 2-12 | 3-13 | 4-14 | 5-15 | 6-16 | 10-16 | 9-15 |
| 1-12 | 2-13 | 3-14 | 4-15 | 5-16 | 11-16 | 10-15 | 9-14 |
| 1-13 | 2-14 | 3-15 | 4-16 | 12-16 | 11-15 | 10-14 | 9-13 |
| 1-14 | 2-15 | 3-16 | 13-16 | 12-15 | 11-14 | 10-13 | 9-12 |
| 1-15 | 2-16 | 14-16 | 13-15 | 12-14 | 11-13 | 10-12 | 9-11 |
| 1-16 | 15-16 | 14-15 | 13-14 | 12-13 | 11-12 | 10-11 | 9-10 |

INTERSECTION: Main Street @ Cross Street Any Town
HWY#: XXX M.P.#: XXX.XX TSSU ID#: XXXXX

SHEET 7

Rotation: 90° Scale: 1"=100'
332_SDLC_cabinet_11X17.dgn :: Default 5/17/2024 11:04:27 AM hwyr23w