Powder Valley Water Control District
Preliminary Construction Cost Estimate
Powder Valley Connector
(2016 Cost)

NO.	ITEM	UNIT	UNIT PRICE	ESTIMATED QUANTITY	TOTAL PRICE	IN-KIND MATCH	CASH MATCH FUNDS	OWRD FUNDS	TOTAL COST
1	Mobilization/Demobilization (5%)	LS	$ 59,700	All Req'd	$ 59,700	$ -	$ 59,700	$ -	$ 59,700
2	Project Safety and Erosion Control	LS	4,000	All Req'd	4,000	-	4,000	-	4,000
3	Job Photos	EA	10	30	300	-	300	-	300
4	36-inch DR 32.5 High Density Polyethylene (HDPE) Pipe	LF	74	7,000	518,000	-	-	518,000	518,000
5	Pipe Installation	LF	20	7,000	140,000	-	-	140,000	140,000
6	Bedding Material	LF	14	7,000	98,000	98,000	-	-	98,000
7	Fill Existing Ditch	LF	16	5,000	80,000	80,000	-	-	80,000
8	Connection to Existing 30-inch Pipe	LS	20,000	All Req'd	20,000	-	20,000	-	20,000
9	Control Valve Vault	LS	40,000	All Req'd	40,000	-	40,000	-	40,000
10	Steel Manifold, Control Valves, Flowmeter, and Miscellaneous Fittings	LS	150,000	All Req'd	150,000	-	-	150,000	150,000
11	Existing P-2 Pipeline Inlet Vault Removal and Ditch Piping	LS	20,000	All Req'd	20,000			20,000	20,000
12	Air/Vacuum Valve Assembly	EA	7,500	4	30,000	-	-	30,000	30,000
13	Pipe Drain Assembly	EA	6,000	3	18,000	-	1,150	16,850	18,000
14	Irrigation Outlet Assembly	EA	7,000	2	14,000	-	-	14,000	14,000
				Subtotal Construction Costs	**$ 1,192,000**	**$ 178,000**	**$ 125,150**	**$ 888,850**	**$ 1,192,000**
				Contingency at 10%	119,200			119,200	119,200
	TOTAL ESTIMATED CONSTRUCTION COST (2016)				**$ 1,311,200**	**$ 178,000**	**$ 125,150**	**$ 1,008,050**	**$ 1,311,200**
15	Staff Time (Secure Funding)	HR	100	10	$ 1,000	$ 1,000	$ -	$ -	$ 1,000
16	Staff Time (Secure Permits)	HR	100	100	10,000	-	-	10,000	10,000
17	Staff Time (Complete Bid Documents)	HR	100	126	12,600	-	4,000	8,600	12,600
18	Staff Time (Bid Project/Secure Contract)	HR	100	110	11,000	1,000	5,000	5,000	11,000
19	Staff Time (Construction Administration)	HR	100	400	40,000	15,000	-	25,000	40,000
20	Staff Time (Project Closeout)	HR	100	100	10,000	5,000	-	5,000	10,000
21	Staff Time (Project Management)	HR	100	440	44,000	30,000	-	14,000	44,000
	TOTAL ESTIMATED LABOR COST (2016)				**$ 128,600**	**$ 52,000**	**$ 9,000**	**$ 67,600**	**$ 128,600**
	TOTAL ESTIMATED COST (2016)				**$ 1,440,000**	**$ 230,000**	**$ 134,000**	**$ 1,076,000**	**$ 1,440,000**
	Total for Section B					$ 230,000	$ 134,000	$1,076,000	$ 1,440,000
	Percentage for Section B					16%	9%	75%	100%

T. 6 S., R. 38E., W.M.

SCALE IN FEET

2500 0 2500

POWDER VALLEY CONNECTOR LOCATION

PROJECT LOCATION

VICINITY MAP

POWDER VALLEY WATER CONTROL DISTRICT

POWDER VALLEY CONNECTOR

OWRD WATER SUPPLY DEVELOPMENT ACCOUNT GRANT APPLICATION

LOCATION AND VICINITY MAPS

FIGURE 1

anderson perry & associates, inc.

Job# 162-00-030 Dec. 21, 2015 lbauer

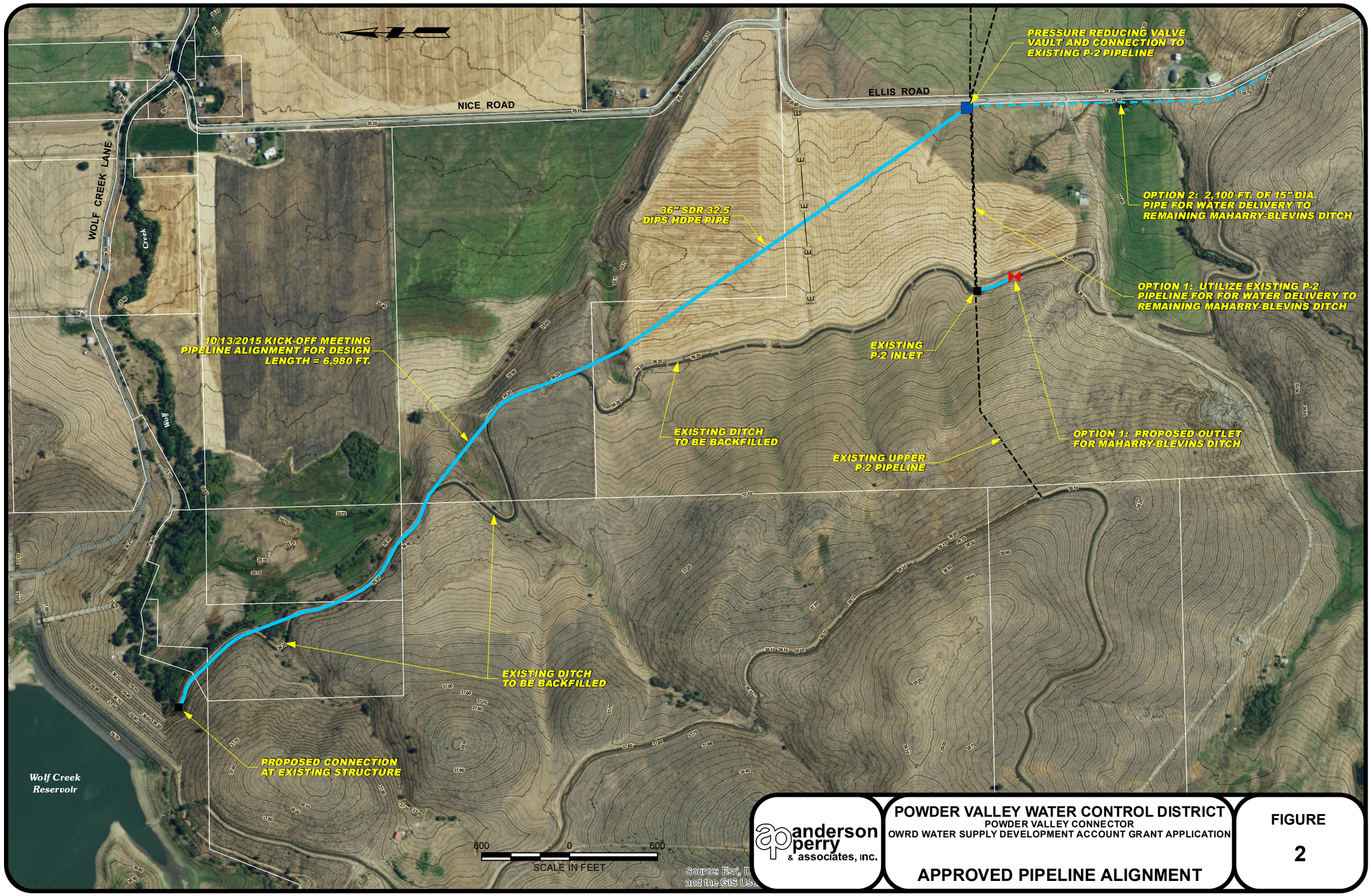

anderson perry & associates, inc.

POWDER VALLEY WATER CONTROL DISTRICT
POWDER VALLEY CONNECTOR
OWRD WATER SUPPLY DEVELOPMENT ACCOUNT GRANT APPLICATION

APPROVED PIPELINE ALIGNMENT

FIGURE 2

\\LGSVR6\gisprojects\PowderValleyWCD\162-00_WaterSupplyGrantApp\Fig_ApprovedAlignment.mxd, 12/21/2015, 11:15:46 AM, DMC

The following four landowners are the owners of the parcels of property that are currently crossed by the MaHarry-Blevins ditch, and will be crossed by the Powder Valley Connector if this project is constructed. These landowners are members of the Powder Valley Water Control District.

Jim Newman
14386 Muddy Creek Lane
Haines, OR 97833
541-805-8503

Myron Miles
70440 Miles Ranch Road
North Powder, OR 97867
541-898-2140
541-519-4628

William Todd Issac
2081 Kramer Road
Chewelah, WA 99109-0455

Richer Family Land & Timber
P.O. Box 3230
La Grande, OR 97850-7230

December 16, 2015

Jon Unger, Water Resources Grant Administrator
Oregon Water Resources Department
725 Summer Street N.E., Suite A
Salem, Oregon 97301

RE: Water Supply Development Account: Powder Valley Connector

Dear Oregon Water Resources Department Review Team:

I, JAMES E. & ELSIE D. NEWMAN, support the Powder Valley Water Control District's (PVWCD) application for funding to construct the Powder Valley Connector. This project involves upgrading a 1.5-mile stretch of the MaHarry-Blevins Ditch from an open-ditch, manually operated system to a fully enclosed pipeline with automated water control features. By upgrading this system, there will be a decrease in water lost through evaporation, irrigation inefficiency, power failures, and human error. This project will allow more water to remain in the Wolf Creek Reservoir for native fish use and recreation.

This ditch crosses my property, and I will allow construction efforts for this project to take place on my land.

The PVWCD's office is located in Union County, Oregon, within the community of North Powder. The PVWCD projects consist of two reservoirs, three ditches, and five pipelines. The Carnes Ditch and Coughanour Ditch are diversions directly from Anthony Creek in the Elkhorn Mountains and carry water to both Pilcher Creek Reservoir and Wolf Creek Reservoir. Wolf Creek Reservoir is located approximately seven miles from North Powder and provides water for 36 landowners through the W-1 pipeline, W-3 pipeline, and the MaHarry-Blevins Ditch. The 1.5-mile stretch of the MaHarry-Blevins Ditch from Wolf Creek Reservoir to the P-2 pipeline inlet is the portion that has been designed for a pipeline. The PVWCD identified the need to reduce water loss from the existing open ditch structure of the MaHarry-Blevins Ditch by replacing it with an enclosed pipeline. An Oregon Watershed Enhancement Board grant provided funding for a water optimization study and the project design, which is nearing completion, and the PVWCD hopes to construct the project in 2016.

I, JAMES E. & ELSIE D. NEWMAN, support this project and will continue to participate in the planning process as this project moves forward.

Sincerely,

James E Newman Family Trust

cc: OWRD, Jon.J.Unger@wrd.state.or.us
G:\Clients\Powder Valley Water Control District\162-00 Powder Valley Connector\Correspondence\Letter of Support-Landowner.doc

James Newman family trust
14386 Muddy Cr. Ln.
Haines, OR 97833

Replacement of the Maharry-Blevins ditch with a conduit will have many benefits.

1. No seepage loss.
2. No evaporation.
3. Increase in crop quality.
4. More efficient distribution of Water.

Seepage

It is very difficult to measure the seepage loss. Observation of the land below the open cannel show wet lands that are imposable to farm or use for pasture. On my place (one ownership) I have had to install drainage tile to decrease the wet areas. These wet areas were not evident prior to the installation of the Maharry-Blevins ditch. There has to be channels to carry this excess water away from the wet areas. The excess water is not likely to be used down stream do to the fact the majority of the land is covered by closed conduits directly from the storage dam. The loss of water.

Evaporation and water loss

Evaporation is equally hard to measure. Pan evaporation is one method which takes much time and effort. The Agimet station in the Baker Valley gives an idea of the amount of evaporation. For the period July1 to 5, 2025 the evaporation was 0.37, 0.40, 0.39, 0.32and 0.35 inches per day. This does not take into consideration of the Plant transpiration along the channel. The transpiration for alfalfa for the same period was 0.33, 0.36, 0.37, 0.29 and 0.32. Some idea of the loss from vegetation along the channel. A lot of the vegetation is trees and brush which use tremendous amounts of water. Not to mention the water used by the grass growing in the channel.

Crop Quality and quantity

Land that is constantly kept wet from the seepage cannot produce a top quality forage. Wetland grasses cut for hay may only bring $60 to $80 per ton where a good crop of alfalfa would bring possibly $190 to 220 per ton. If used for pasture it is very poor and will not be grazed until there is nothing else to graze. The quantity of forage is greater where the moisture in the soil is of a desirable level for the better forage.

Efficiency of distribution

The control of the distribution of irrigation water is extremely easy and immediate. In the enclosed conduit flow is easily stopped when not need or changing irrigation equipment. Unlike the open flow where it is not feasible to stop the flow while changing irrigation equipment. The loss from timing of turning on and off will be eliminated.

December 16, 2015

Jon Unger, Water Resources Grant Administrator
Oregon Water Resources Department
725 Summer Street N.E., Suite A
Salem, Oregon 97301

RE: Water Supply Development Account: Powder Valley Connector

Dear Oregon Water Resources Department Review Team:

I, WILLIAM TODD ISAAC, support the Powder Valley Water Control District's (PVWCD) application for funding to construct the Powder Valley Connector. This project involves upgrading a 1.5-mile stretch of the MaHarry-Blevins Ditch from an open-ditch, manually operated system to a fully enclosed pipeline with automated water control features. By upgrading this system, there will be a decrease in water lost through evaporation, irrigation inefficiency, power failures, and human error. This project will allow more water to remain in the Wolf Creek Reservoir for native fish use and recreation.

This ditch crosses my property, and I will allow construction efforts for this project to take place on my land.

The PVWCD's office is located in Union County, Oregon, within the community of North Powder. The PVWCD projects consist of two reservoirs, three ditches, and five pipelines. The Carnes Ditch and Coughanour Ditch are diversions directly from Anthony Creek in the Elkhorn Mountains and carry water to both Pilcher Creek Reservoir and Wolf Creek Reservoir. Wolf Creek Reservoir is located approximately seven miles from North Powder and provides water for 36 landowners through the W-1 pipeline, W-3 pipeline, and the MaHarry-Blevins Ditch. The 1.5-mile stretch of the MaHarry-Blevins Ditch from Wolf Creek Reservoir to the P-2 pipeline inlet is the portion that has been designed for a pipeline. The PVWCD identified the need to reduce water loss from the existing open ditch structure of the MaHarry-Blevins Ditch by replacing it with an enclosed pipeline. An Oregon Watershed Enhancement Board grant provided funding for a water optimization study and the project design, which is nearing completion, and the PVWCD hopes to construct the project in 2016.

I, WILLIAM TODD ISAAC, support this project and will continue to participate in the planning process as this project moves forward.

Sincerely,

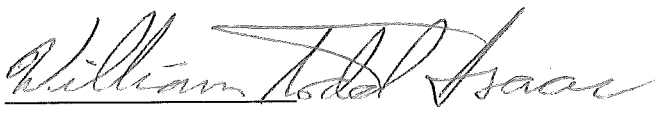

cc: OWRD, Jon.J.Unger@wrd.state.or.us
G:\Clients\Powder Valley Water Control District\162-00 Powder Valley Connector\Correspondence\Letter of Support-Landowner.doc

December 16, 2015

Jon Unger, Water Resources Grant Administrator
Oregon Water Resources Department
725 Summer Street N.E., Suite A
Salem, Oregon 97301

RE: Water Supply Development Account: Powder Valley Connector

Dear Oregon Water Resources Department Review Team:

I, Mr. and Mrs. Miles, support the Powder Valley Water Control District's (PVWCD) application for funding to construct the Powder Valley Connector. This project involves upgrading a 1.5-mile stretch of the MaHarry-Blevins Ditch from an open-ditch, manually operated system to a fully enclosed pipeline with automated water control features. By upgrading this system, there will be a decrease in water lost through evaporation, irrigation inefficiency, power failures, and human error. This project will allow more water to remain in the Wolf Creek Reservoir for native fish use and recreation.

This ditch crosses my property, and I will allow construction efforts for this project to take place on my land.

The PVWCD's office is located in Union County, Oregon, within the community of North Powder. The PVWCD projects consist of two reservoirs, three ditches, and five pipelines. The Carnes Ditch and Coughanour Ditch are diversions directly from Anthony Creek in the Elkhorn Mountains and carry water to both Pilcher Creek Reservoir and Wolf Creek Reservoir. Wolf Creek Reservoir is located approximately seven miles from North Powder and provides water for 36 landowners through the W-1 pipeline, W-3 pipeline, and the MaHarry-Blevins Ditch. The 1.5-mile stretch of the MaHarry-Blevins Ditch from Wolf Creek Reservoir to the P-2 pipeline inlet is the portion that has been designed for a pipeline. The PVWCD identified the need to reduce water loss from the existing open ditch structure of the MaHarry-Blevins Ditch by replacing it with an enclosed pipeline. An Oregon Watershed Enhancement Board grant provided funding for a water optimization study and the project design, which is nearing completion, and the PVWCD hopes to construct the project in 2016.

I, Mr. and Mrs. Miles, support this project and will continue to participate in the planning process as this project moves forward.

Sincerely,

Myron Miles
Dorothy L. Miles

cc: OWRD, Jon.J.Unger@wrd.state.or.us
G:\Clients\Powder Valley Water Control District\162-00 Powder Valley Connector\Correspondence\Letter of Support-Landowner.doc

Meeting Summary for the Powder Valley Connector Kickoff Meeting
Clients: Powder Valley Water Control District (PVWCD) and Baker Valley SWCD

Meeting Date: October 13, 2015

Landowners Present: Curt Martin, Jerry Gray, Bill Browne, Myron Miles, Greg Miles, James Newman

Others Present: Andrew Umpleby – PVWCD Manager, Brett Moore – Anderson Perry, Lyle Umpleby – Anderson Perry

The meeting started at 1:05 with introductions.

Anderson Perry distributed some aerial maps with proposed pipeline alignments shown for the Powder Valley Connector pipeline.

Project Design Criteria

Brett Moore discussed pipeline capacity that will be needed to provide water for all of the water rights under the pipeline and also the rights downstream of the connection to the P-2 Pipeline in the MaHarry Blevins ditch. After discussion of the amount of water required by the water rights and also the amount of water that has been historically delivered through the ditch, it was agreed that the pipeline should be designed to carry a flow of 40 cfs when the pool at Wolf Creek Dam is above one-half full. A 36-inch diameter pipe will be large enough to supply the required 40 cfs when the reservoir is above one half full.

Pipeline Alignment

The different pipeline alignment options were discussed. The alignment agreed to by the landowners present is to connect the new pipeline to the pipe from the outlet structure of Wolf Creek Dam at the location where currently the water is released into the MaHarry Blevins ditch and then follow the existing ditch, except at locations where corners could be cut to shorten the length of the pipeline. The alignment for the last approximately 3,250 feet of pipe is to go in a straight line from the ditch to a point in the field along Ellis road where the existing P-2 Pipeline crosses the road. The pipeline alignment agreed to is shown on the attached aerial photograph. The total length for the approved alignment is approximately 6,980 feet.

There was a discussion of new easements being required for the new pipeline route. The old ditch easements could be used where the pipe is installed in the existing ditch. Where no pipe is to be installed in the ditch the ditch easements can be cancelled and new easements given for the new pipeline alignment. James Newman and Myron Miles both gave verbal indication that there wouldn't be any problem changing the location of the easements.

As part of the project the existing MaHarry Blevins ditch will be filled in over the pipeline and also where no pipe is installed in the ditch.

The approved alignment will move the connection point of the Connector pipeline to the P-2 Pipeline to a location in the field along Ellis Road where the P-2 Pipeline currently crosses the road. The existing pipeline will be used to provide water to the MaHarry Blevins ditch for use by landowners further down the ditch.

Operation

The pressure at the connection to the P-2 Pipeline will be controlled with the use of pressure reducing valves. The pressure will be reduced as low as possible in order to prevent over pressurizing the existing pipeline. Once the reservoir water level drops to a point where the pressure reducing valves will no longer operate, a bypass valve will be opened. The system will be an on demand system similar to the existing W-1 Pipeline.

A valve will be installed to provide water to the remaining MaHarry Blevins Ditch water users.

Future Expansion

There was discussion of the installation of a new pipeline along Ellis Road to deliver water to the remaining MaHarry Blevins ditch. This pipeline could be a potential future project that could eliminate approximately 4,370 feet of open ditch. The design of this pipeline will not be part of this project.

With no further discussion the meeting was ended at 2:50 p.m.

Minutes provided by Lyle Umpleby of Anderson Perry and Associates

POWDER VALLEY WATER CONTROL DISTRICT

P.O. Box 189 - 690 E Street, North Powder, OR 97867 Tele: (541) 898-2366
FAX (541) 898-2548 Email: pvwater@eoni.com
Hearing Impaired – Call 711

Minutes of January 11, 2016 Regular Board Meeting

Board Members Present: Curt Martin, Chris Colton, Lyle Umpleby, Jerry Gray, Tom Pierce, Alan Maxwell, Bill Browne, and Dennis Axness

Others Present: Janelle Umpleby (SWCD), Brett Moore (AP), Myron Miles, Greg Miles, and Andrew Umpleby Manager

President Curt Martin called the meeting to order at 7:00 pm.

Changes or Additions to the Agenda:
None

Minutes:
Chris moved to accept the minutes of the December 14, 2015 Regular Board Meeting as presented, Dennis seconded the motion. Motion passed unanimously.

Accounts Payable: Andrew presented the bills due and they were reviewed and discussed.
Chris moved to pay checks numbered **5289 – 5306 & EFT 01-16 & 01-16A** in the total amount of **$32,598.96**; Alan seconded the motion, passed unanimously.

OLD BUSINESS & VISITORS

P-2 Connector Preliminary Design:
Brett Moore from Anderson Perry presented the board with a draft of the design and cost estimate for the P-2 Connector. After much discussion the board was very pleased with how thought out and developed the Connector has become.

P-2 Grant Update:
Andrew presented the board with a copy of the grant application. Discussion was held where Andrew and Brett answering numerous questions the board had about the application. After much discussion Jerry made the motion to approve the application as presented, Chris seconded passed unanimously.

Instream Water Right Protest Update:
The discussion started with Jerry, Curt, and Andrew giving an update on the districts group meeting. The board discussed the group's decision to draft a water management plan. The board appointed Lyle, Bill, Dennis, and Jerry to serve on a committee to draft a water management plan for PV Water. The board also addressed the current bill from the attorney. Discussion was held. Dennis made the motion to pay the attorney the recommended amount from the group of $2,500, Jerry seconded. Discussion was held. Curt called for a vote, passed unanimously. Andrew also presented the board with a request from Wes Morgan and the Burnt River irrigation district which requested $300.00 from PV Water to help with the attorney fees in the process of renewing the reservations. Tom made the motion that the district help Burnt River in the process of renewing the reservations for the requested amount of $300.00, Bill seconded passed unanimously.

District Records:
This Item was tabled until the next meeting.

NEW BUSINESS

Manager Report:
Andrew presented his activities report and discussed as needed. The board approved the report by consensus.

OTHER BUSINESS
With no further business the meeting was adjourned at 9:00 pm.
Minutes submitted by Andrew Umpleby, Manager

Oregon
Kate Brown, Governor

Department of Environmental Quality
Eastern Region - Pendleton Office
800 SE Emigrant Ave, Suite 330
Pendleton, OR 97801
Phone: (541) 276-4063
Fax: (541) 278-0168
Relay Service: 711

December 18, 2015

Jon Unger, Water Resources Grant Administrator
Oregon Water Resources Department
725 Summer Street N.E., Suite A
Salem, Oregon 97301

RE: Water Supply Development Account: Powder Valley Connector

Dear Oregon Water Resources Department Review Team:

The Department of Environmental Quality (DEQ) supports the Powder Valley Water Control District's (PVWCD) application for funding to construct the Powder Valley Connector. This project involves upgrading a 1.5-mile stretch of the MaHarry-Blevins Ditch from an open-ditch, manually operated system to a fully enclosed pipeline with automated water control features. By upgrading this system, there will be a decrease in water lost through evaporation, irrigation inefficiency, power failures, and human error. This project will allow more water to remain in the Wolf Creek Reservoir for native fish use and recreation. DEQ supports piping projects such as this one due to the water quality benefits resulting from reductions in sediment from erosion of open ditches, and bacteria and nutrient loading reductions from the lack of access to the ditch by livestock.

The PVWCD's office is located in Union County, Oregon, within the community of North Powder. The PVWCD projects consist of two reservoirs, three ditches, and five pipelines. The Carnes Ditch and Coughanour Ditch are diversions directly from Anthony Creek in the Elkhorn Mountains and carry water to both Pilcher Creek Reservoir and Wolf Creek Reservoir. Wolf Creek Reservoir is located approximately seven miles from North Powder and provides water for 36 landowners through the W-1 pipeline, W-3 pipeline, and the MaHarry-Blevins Ditch. The 1.5-mile stretch of the MaHarry-Blevins Ditch from Wolf Creek Reservoir to the P-2 pipeline inlet is the portion that has been designed for a pipeline. The PVWCD identified the need to reduce water loss from the existing open ditch structure of the MaHarry-Blevins Ditch by replacing it with an enclosed pipeline. An Oregon Watershed Enhancement Board grant provided funding for a water optimization study and the project design, which is nearing completion, and the PVWCD hopes to construct the project in 2016.

DEQ supports this project and will continue to participate in the planning process as this project moves forward.

Sincerely,

John P. Dadoly

John P. Dadoly
DEQ Basin Coordinator
Eastern Region, Pendleton

cc: OWRD, Jon.J.Unger@wrd.state.or.us

Oregon
Kate Brown, Governor

Water Resources Department
725 Summer St NE, Suite A
Salem, OR 97301
(503) 986-0900
Fax (503) 986-0904

December 17, 2015

Jon Unger, Water Resources Grant Administrator
Oregon Water Resources Department
725 Summer Street N.E., Suite A
Salem, Oregon 97301

RE: Water Supply Development Account: Powder Valley Connector

Dear Oregon Water Resources Department Review Team:

The District 8 Watermaster office supports the Powder Valley Water Control District's (PVWCD) application for funding to construct the Powder Valley Connector. This project involves upgrading a 1.5-mile stretch of the MaHarry-Blevins Ditch from an open-ditch, manually operated system to a fully enclosed pipeline with automated water control features. By upgrading this system, there will be a decrease in water lost through evaporation, irrigation inefficiency, power failures, and human error. This project will allow more water to remain in the Wolf Creek Reservoir for native fish use and recreation.

The PVWCD's office is located in Union County, Oregon, within the community of North Powder. The PVWCD projects consist of two reservoirs, three ditches, and five pipelines. The Carnes Ditch and Coughanour Ditch are diversions directly from Anthony Creek in the Elkhorn Mountains and carry water to both Pilcher Creek Reservoir and Wolf Creek Reservoir. Wolf Creek Reservoir is located approximately seven miles from North Powder and provides water for 36 landowners through the W-1 pipeline, W-3 pipeline, and the MaHarry-Blevins Ditch. The 1.5-mile stretch of the MaHarry-Blevins Ditch from Wolf Creek Reservoir to the P-2 pipeline inlet is the portion that has been designed for a pipeline. The PVWCD identified the need to reduce water loss from the existing open ditch structure of the MaHarry-Blevins Ditch by replacing it with an enclosed pipeline. An Oregon Watershed Enhancement Board grant provided funding for a water optimization study and the project design, which is nearing completion, and the PVWCD hopes to construct the project in 2016.

The District 8 Watermaster office supports this project and will continue to participate in the planning process as this project moves forward.

Sincerely,

Richard M. Lusk

Rick Lusk
Assistant Manager, ER
Watermaster District 8
1995 3rd Street, Suite 180
Baker City, OR 97814
541-523-8224
Rick.M.LUSK@wrd.state.or.us

January 13, 2016

Jon Unger, Water Resources Grant Administrator
Oregon Water Resources Department
725 Summer Street N.E., Suite A
Salem, Oregon 97301

RE: Water Supply Development Account: Powder Valley Connector

Dear Oregon Water Resources Department Review Team:

The Baker Valley Soil & Water Conservation District supports the Powder Valley Water Control District's (PVWCD) application for funding to construct the Powder Valley Connector. This project involves upgrading a 1.5-mile stretch of the MaHarry-Blevins Ditch from an open-ditch, manually operated system to a fully enclosed pipeline with automated water control features. By upgrading this system, there will be a decrease in water lost through evaporation, irrigation inefficiency, power failures, and human error. This project will allow more water to remain in the Wolf Creek Reservoir for native fish use and recreation.

The PVWCD's office is located in Union County, Oregon, within the community of North Powder. The PVWCD projects consist of two reservoirs, three ditches, and five pipelines. The Carnes Ditch and Coughanour Ditch are diversions directly from Anthony Creek in the Elkhorn Mountains and carry water to both Pilcher Creek Reservoir and Wolf Creek Reservoir. Wolf Creek Reservoir is located approximately seven miles from North Powder and provides water for 36 landowners through the W-1 pipeline, W-3 pipeline, and the MaHarry-Blevins Ditch. The 1.5-mile stretch of the MaHarry-Blevins Ditch from Wolf Creek Reservoir to the P-2 pipeline inlet is the portion that has been designed for a pipeline. The PVWCD identified the need to reduce water loss from the existing open ditch structure of the MaHarry-Blevins Ditch by replacing it with an enclosed pipeline. An Oregon Watershed Enhancement Board grant provided funding for a water optimization study and the project design, which is nearing completion, and the PVWCD hopes to construct the project in 2016.

The Baker Valley Soil & Water Conservation District supports this project and will continue to participate in the planning process as this project moves forward.

Sincerely,

cc: OWRD, Jon.J.Unger@wrd.state.or.us

G:\Clients\Powder Valley Water Control District\162-00 Powder Valley Connector\Correspondence\Letter of Support-Agency.doc

Bill Harvey
Commission Chair
bharvey@bakercounty.org

Tim L. Kerns
Commissioner
tkerns@bakercounty.org

Mark Bennett
Commissioner
mbennett@bakercounty.org

January 5, 2016

Jon Unger, Water Resources Grant Administrator
Oregon Water Resources Department
725 Summer Street N.E., Suite A
Salem, Oregon 97301

RE: Water Supply Development Account: Powder Valley Connector

Dear Oregon Water Resources Department Review Team:

The Baker County, Board of Commissioners supports the Powder Valley Water Control District's (PVWCD) application for funding to construct the Powder Valley Connector. This project involves upgrading a 1.5-mile stretch of the MaHarry-Blevins Ditch from an open-ditch, manually operated system to a fully enclosed pipeline with automated water control features. By upgrading this system, there will be a decrease in water lost through evaporation, irrigation inefficiency, power failures, and human error. This project will allow more water to remain in the Wolf Creek Reservoir for native fish use and recreation.

The PVWCD's office is located in Union County, Oregon, within the community of North Powder, serving agricultural producers in both Baker and Union Counties. The PVWCD projects consist of two reservoirs, three ditches, and five pipelines. The Carnes Ditch and Coughanour Ditch are diversions directly from Anthony Creek in the Elkhorn Mountains and carry water to both Pilcher Creek Reservoir and Wolf Creek Reservoir. Wolf Creek Reservoir is located approximately seven miles from North Powder and provides water for 36 landowners through the W-1 pipeline, W-3 pipeline, and the MaHarry-Blevins Ditch. The 1.5-mile stretch of the MaHarry-Blevins Ditch from Wolf Creek Reservoir to the P-2 pipeline inlet is the portion that has been designed for a pipeline. The PVWCD identified the need to reduce water loss from the existing open ditch structure of the MaHarry-Blevins Ditch by replacing it with an enclosed pipeline. An Oregon Watershed Enhancement Board grant provided funding for a water optimization study and the project design, which is nearing completion, and the PVWCD hopes to construct the project in 2016.

Baker County strongly supports this water conservation project and will continue to participate in the planning process as this project moves forward.

Sincerely,

Mark Bennett, Commissioner
Baker County

Cc: Andrew Umpleby, Mgr. PVWC

UNION COUNTY
BOARD OF COMMISSIONERS

Steve McClure Commissioner
Mark D. Davidson, Commissioner
Jack Howard, Commissioner

1106 K Avenue La Grande, OR 97850 PHONE (541)963-1001 FAX (541)963-1079 TTY 1-800-735-2900

January 14, 2016

Jon Unger, Water Resources Grant Administrator
Oregon Water Resources Department
725 Summer Street N.E., Suite A
Salem, Oregon 97301

RE: Water Supply Development Account: Powder Valley Connector

Dear OWRD Review Team:

Union County supports the Powder Valley Water Control District's (PVWCD) application for funding to construct the Powder Valley Connector. This project involves upgrading a 1.5-mile stretch of the MaHarry-Blevins Ditch from an open-ditch, manually operated system to a fully enclosed pipeline with automated water control features. By upgrading this system, there will be a decrease in water lost through evaporation, irrigation inefficiency, power failures, and human error. This project will allow more water to remain in the Wolf Creek Reservoir for native fish use and recreation.

The PVWCD's office is located in Union County, Oregon, within the community of North Powder. The PVWCD projects consist of two reservoirs, three ditches, and five pipelines. The Carnes Ditch and Coughanour Ditch are diversions directly from Anthony Creek in the Elkhorn Mountains and carry water to both Pilcher Creek Reservoir and Wolf Creek Reservoir. Wolf Creek Reservoir is located approximately seven miles from North Powder and provides water for 36 landowners through the W-1 pipeline, W-3 pipeline, and the MaHarry-Blevins Ditch. The 1.5-mile stretch of the MaHarry-Blevins Ditch from Wolf Creek Reservoir to the P-2 pipeline inlet is the portion that has been designed for a pipeline. The PVWCD identified the need to reduce water loss from the existing open ditch structure of the MaHarry-Blevins Ditch by replacing it with an enclosed pipeline. An Oregon Watershed Enhancement Board grant provided funding for a water optimization study and the project design, which is nearing completion, and the PVWCD hopes to construct the project in 2016.

Union County supports this project and encourages your favorable consideration of the funding request.

Sincerely,

Mark D. Davidson
Commissioner

Oregon
Kate Brown, Governor

Oregon Watershed Enhancement Board
775 Summer Street NE, Suite 360
Salem, OR 97301-1290
(503) 986-0178
FAX (503) 986-0199
www.oregon.gov/OWEB

January 5, 2016

Jon Unger, Water Resources Grant Administrator
Oregon Water Resources Department
725 Summer Street N.E., Suite A
Salem, Oregon 97301

Dear Mr. Unger:

The Oregon Watershed Enhancement Board invests funding from Oregon's lottery and other sources to support healthy watersheds and native fish and wildlife habitats through grants to locally based organizations such as watershed councils, soil and water conservation districts, land trusts, and others. The Powder Valley Water Control District (PVWCD) has been a recipient of OWEB funds in the past.

The PVWCD projects consist of two reservoirs, three ditches, and five pipelines. The PVWCD has identified the need to reduce water loss from the existing open ditch structure of the MaHarry-Blevins Ditch by replacing it with an enclosed pipeline

The partners involved in the PVWCD Water Supply Development Account proposal have been collaborating to promote irrigation efficiency and water quality projects in the Powder Valley for many years. The partners have successfully competed for OWEB funding on numerous small and large restoration grants, including most recently a $34,000 technical assistance grant for a water optimization study and project design specifically for this section of the MaHarry-Blevins Ditch.

If you have questions about OWEB's grant programs and investment priorities in the Powder Valley, please contact me.

Sincerely,

Meta Loftsgaarden
Executive Director

January 5, 2016

Jon Unger, Water Resources Grant Administrator
Oregon Water Resources Department
725 Summer Street N.E., Suite A
Salem, Oregon 97301

RE: Water Supply Development Account: Powder Valley Connector

Dear Oregon Water Resources Department Review Team:

The Oregon Department of Agriculture (ODA) supports the Powder Valley Water Control District's (PVWCD) application for funding to construct the Powder Valley Connector. This project involves upgrading a 1.5-mile stretch of the MaHarry-Blevins Ditch from an open-ditch, manually operated system to a fully enclosed pipeline with automated water control features. By upgrading this system, there will be a decrease in water lost through evaporation, irrigation inefficiency, power failures, and human error. This project will allow more water to remain in the Wolf Creek Reservoir for native fish use and recreation.

The 1.5-mile stretch of the MaHarry-Blevins Ditch from Wolf Creek Reservoir to the P-2 pipeline inlet is the portion that has been designed for a pipeline. Measurable water quality benefits should result from replacement of the current open ditch system. The open ditch allows access by livestock that introduces manure and sediment to the irrigation water as well as aquatic weeds and weed seeds. Water savings from eliminating ditch losses will reduce the amount of water diverted from Wolf Creek Reservoir therefore leaving water in the reservoir for other uses. ODA would encourage further on-farm water savings by conversion from flood irrigation to sprinkler irrigation, where appropriate, to reduce ponded areas and return flows back to area streams.

The ODA supports this project and will continue to participate in the planning process as this project moves forward.

Sincerely,

Tom Straughan
Regional Water Quality Specialist

cc: Andrew Umpleby, PVWCD

Dana Kurtz

From: Quigley Karen M <karen.m.quigley@state.or.us>
Sent: Friday, December 11, 2015 2:56 PM
To: Dana Kurtz
Subject: Re: Tribes potentially affected by Powder Valley project

Hello Dana,
I would suggest you touch base with Warm Springs, Umatilla and Burns Paiute.
Thanks,
Karen

Sent from my Verizon Wireless 4G LTE DROID

Dana Kurtz <dkurtz@andersonperry.com> wrote:

Hi Karen,

The Powder Valley Water Control District is applying for an OWRD Water Supply Development Grant in the Powder Valley, Union County Oregon. I've attached a project map of the project area (in blue MaHarry-Blevins ditch). The project will involve piping this open ditch to support water conservation and efficiency goals.

Can you let us know what tribes could potentially be affected by this project?

Thank you very much for your help, and feel free to contact me if you have additional questions about the project.

Thanks,

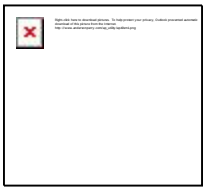

Dana Kurtz
Environmental Scientist
Anderson Perry & Associates, Inc.
1901 N Fir Street/PO Box 1107
La Grande, OR 97850
541-963-8309 office / 541-963-5456 fax
509-953-1804 cell

Web Facebook

Powder Valley Water Control District

System Optimization Study

anderson perry & associates, inc.
engineering · surveying · natural resources

1901 N. Fir Street
La Grande, Oregon 97850
(541) 963-8309
www.andersonperry.com

2013

POWDER VALLEY WATER CONTROL DISTRICT

SYSTEM OPTIMIZATION STUDY

November 2013

ANDERSON PERRY & ASSOCIATES, INC.

Civil Engineers

La Grande, Oregon
Walla Walla, Washington

Copyright 2013 by Anderson Perry & Associates, Inc.

Job No. 1199-475

TABLE OF CONTENTS

Page

Background 1
Coughanour Ditch 2
MaHarry Ditch 3
Carnes Ditch 3
Study Summary 4

Tables
- 1 - Coughanour Ditch
- 2 - MaHarry Ditch
- 3 - Carnes Ditch

Figure
- 1 - Location and Vicinity Maps

HEC-RAS Model Results
- Coughanour Ditch
- MaHarry Ditch
- Carnes Ditch

Map
- Water Conveyance System

POWDER VALLEY WATER CONTROL DISTRICT
SYSTEM OPTIMIZATION STUDY

BACKGROUND

The Powder Valley Water Control District (District) manages irrigation water for the participating landowners of the District. The District's reservoirs and ditches are shown on Figure 1, Location and Vicinity Maps. Wolf Creek and Pilcher Creek Reservoirs are included in the system, along with three major ditches that deliver water to the reservoirs and/or to the irrigators. The three ditches are the Coughanour, MaHarry, and Carnes Ditches. These ditches, along with the flow measurement locations, are shown on the Water Conveyance System Map located at the end of this Study.

In an effort to determine the efficiency of the ditches, the District pursued and received an Oregon Water Enhancement Board (OWEB) grant to conduct a System Optimization Study of the conveyance system. The District contracted with Anderson Perry & Associates, Inc., to conduct the Study to help identify areas that could be improved to optimize the use of the water diverted from the streams and system reservoirs. This Study was conducted to quantify the approximate amount of water loss in each of the ditches. Sections 150 feet long, in each ditch, were surveyed to obtain cross sections at locations selected by the District Manager. The inlet and outlet invert elevations of culverts in the ditches were also surveyed. The District Manager, using HOBO depth recording devices placed in the middle of surveyed sections, recorded the depth of the water at each site. The ditch survey locations, and culverts that were surveyed on each ditch, are shown on the Water Conveyance System Map.

The survey information was reduced for use in the Hydrologic Engineering Centers River Analysis System (HEC-RAS) stream modeling program. HEC-RAS performs open channel one-dimensional steady flow, unsteady flow, sediment transport/mobile bed computations, and water temperature modeling. The basic computational procedure is based on the solution of the one-dimensional energy equation. Energy losses are evaluated by friction (Manning's equation) and contraction/expansion (coefficient multiplied by the change in velocity head). The momentum equation may be used in situations where the water surface profile is rapidly varied. During the process of modeling the ditch sections to determine the flows at each section, it was determined that in order to obtain more accurate flow calculations, water velocity measurements were needed for each of the surveyed locations. The velocity measurements were required in order to calibrate the HEC-RAS model at a known velocity and depth of water. After the model was calibrated, the depth measurements taken from the HOBO recorders could then be used to determine the flow in the ditches at a given time. Once calibrated, the HEC-RAS model could then be used to help determine the flow in the ditches at different water depths.

It should also be noted that physical evidence of ditch water loss is apparent by observation at several locations along the length of the ditch. Aerial photos show green areas below the ditch where water is leaking from the ditch and, in many areas, water is

flowing below the ditch where there is no other source for the water except from ditch seepage. These areas can be seen on the Water Conveyance System Map located at the back of this report.

COUGHANOUR DITCH

Flow measurements for the Coughanour Ditch are shown in three columns on Table 1. Information in the June 17, 2012, column shows that 23 cubic feet per second (cfs) was diverted from Anthony Creek at the Coughanour head gate, 4 cfs was released into the Pratt Ditch, and the final amount of water reaching the siphon at Pilcher Creek Dam was 9 cfs. The total loss for the upper reach of the Coughanour Ditch, according to these measurements, is approximately 10 cfs. The upper reach is approximately 3.3 miles long. The approximate ditch loss for the upper reach is 3 cfs per mile of ditch.

The next column in Table 1 shows the flow in the middle reach of the Coughanour Ditch, between Pilcher Creek Dam and the inlet to the P-2 pipeline. The combined flow into the Coughanour Ditch from the siphon and the water released from the dam was 45 cfs. Withdrawals from the ditch between the dam and the P-2 inlet were as follows:

- 0.7 cfs for the Wilson Cabin.
- 18.5 cfs for the Pine Ditch/North Powder River.
- 1.0 cfs (conservative estimate) for the Hennings' pumps.
- 4.8 cfs for the Martin Ditch.

With 45 cfs in the ditch at Pilcher Creek Dam and a total of 25 cfs being removed from the ditch at the various locations, the amount of water at the upper P-2 pipeline inlet should be 20 cfs. As shown on Table 1, the measured water at the P-2 inlet was 8 cfs, indicating that the total ditch loss from the dam to the pipeline inlet was approximately 12 cfs. The Coughanour Ditch is approximately 5 miles long from the dam to the pipeline inlet. The calculated ditch loss from the dam to the P-2 inlet is approximately 2.4 cfs per mile of ditch.

The quantity of ditch loss is related to the amount of water in the ditch at the time the measurements were taken. Although the relationship of water loss in the ditch to the amount of water in the ditch may not be linear, it is assumed that as the amount of water in the ditch increases or decreases, the water loss from the ditch will also increase and decrease. Overall, the loss in the Coughanour Ditch using the stated flow is approximately 2.7 cfs per mile of ditch.

The ditch reach from the Upper P-2 inlet to the Wolf Creek Reservoir was not part of the Study, although a proportional amount of water could be assumed to be lost in this reach as well. Based on losses in the upper and middle reaches, the water loss from the system amounts to approximately 22 cfs, or 44 Acre-Feet (Ac-Ft) per day. Based on a conservative number of 90 days of flow in the Coughanour Ditch, that calculates to be a loss to the system of approximately 4,000 Ac-Ft of water in one season.

The information in the third column of Table 1 shows the amount of flow in the ditch on June 7, 2013, when velocity measurements were taken. The velocity measurements were used in the calibration of the HEC-RAS model in order to determine the flows at the various depths given in the HOBO depth data.

MaHarry Ditch

As shown on Table 2, the same is true for the MaHarry Ditch as for the Coughanour Ditch. There are many locations where physical evidence of ditch leakage is present. These areas can be identified from aerial photos or on-site observation.

The flow measurements for the MaHarry Ditch are shown in two columns on Table 2. The information in the June 7, 2013, column is a result of velocity measurements taken on that date. The velocity measurements were used to calibrate the HEC-RAS model, in order to determine the flows from the depths given by the HOBO depth data. Using the data in the June 7, 2013, column, the amount of water loss is approximately 2 to 3 cfs per mile of ditch.

The information in the July 12, 2012, column shows the initial flow in the ditch to be approximately 39 cfs, with the flow decreasing at each surveyed location. At MB 3, the surveyed section in the Miles' property, the flow has decreased to 30 cfs. Allowing 1.0 cfs for the Newman irrigation outlet would make the loss from the beginning of the MaHarry Ditch to the P-2 pipeline inlet to be approximately 7 cfs. The distance from Wolf Creek Dam to the P-2 pipeline inlet is 1.5 miles. The ditch loss at the calculated flow is approximately 5 cfs per mile of ditch.

The calculated ditch water loss flows in the MaHarry Ditch vary between the two columns in Table 2. Using the more conservative loss of 2.0 cfs per mile indicates that the potential loss in the MaHarry Ditch, between Wolf Creek Dam and the lower 2-P pipeline intake, is 6 Ac-Ft per day or more. The average ditch loss in terms of percentage of water in the ditch is approximately 14 percent of the water released from Wolf Creek Reservoir.

Carnes Ditch

There are also many locations at which physical evidence of ditch leakage is present on the Carnes Ditch. These areas may again be identified from aerial photos or personal observation. One of the easier locations at which to verify seepage from the ditch is on the access road to the Coughanour head gate. There is a continual flow of water along this road as long as there is water in the Carnes Ditch.

Flow measurements for the Carnes Ditch are shown in three columns on Table 3. The information given in the June 12, 2012, column has many unknown variables that could affect the accuracy of the measurement. A trend shows water loss between the head gate and the diversion out of the Carnes Ditch into Pilcher Creek Reservoir, but the information is not reliable enough to put a number to the volume of loss.

The second column flow measurement shows a more consistent trend in water loss, although there are some questionable numbers. Water measured at the Dutch Creek Parshall flume and the flow at CNS 5 at Tucker Flat Road are the same, while flow measured between the two sites, at CNS 4, shows a decrease in flow. When taking the measurement at Dutch Creek and then the measurement where the water is diverted to Pilcher Creek Reservoir, the loss is significant. The total loss between the two points is shown as 7 cfs, which translates into 2.5 cfs per mile of ditch.

The third column, June 7, 2013, shows the flows calculated using the measured velocities. There are several questionable measurements, since the flow numbers show a gain in water in some reaches of the ditch. On the day the velocity measurements were taken, water was being diverted to Anthony Creek at Dutch Creek; however, there is no flow measurement to determine an amount that was being diverted. Using the velocity measurement below the flume at Dutch Creek and then the velocity at the diversion to Pilcher Creek Reservoir to calculate the flow, the calculations show a loss of 7 cfs. Six cfs loss is 2.5 cfs per mile of ditch, or approximately a 13 percent loss in flow from Dutch Creek to the Pilcher Creek Reservoir diversion.

The trend shows that there is a significant amount of water loss from the Carnes Ditch. Based on a conservative number of 45 days of water in the Carnes Ditch and a flow of 45 cfs for those 45 days, the amount of water loss, using a 12 percent loss from the head gate to the diversion from the ditch to Pilcher Creek Reservoir, would be approximately 500 Ac-Ft.

STUDY SUMMARY

Coughanour Ditch

- The Coughanour Ditch is approximately 9 miles long from the diversion headgate at Anthony Creek, and the ditch loss may be as much as 2.5 cfs per mile of ditch. Assuming water will flow in the ditch for an average of 60 days during the irrigation season, the ditch loss could be up to 2,700 Ac-Ft per irrigation season.
- 2,700 Ac-Ft is approximately 26 percent of the irrigation storage capacity of Wolf Creek Reservoir.

MaHarry Ditch

- The MaHarry Ditch is approximately 1.5 miles long from Wolf Creek Reservoir to the P-2 Pipeline inlet. The ditch loss may be as much as 2 cfs per mile of ditch. Assuming water will flow in the ditch for an average of 150 days during the irrigation season, the ditch loss could be up to 1,350 Ac-Ft per irrigation season.
- 1,350 Ac-Ft is approximately 13 percent of the irrigation storage capacity of Wolf Creek Reservoir.

Carnes Ditch

- The Carnes Ditch is approximately 4.3 miles long from the diversion headgate on Anthony Creek to the diversion sending the water to Pilcher

Creek Reservoir. The ditch loss may be as high as 2.5 cfs per mile of ditch. Assuming water will flow in the Carnes Ditch for an average of 45 days during the irrigation season, the ditch loss could be up to 970 Ac-Ft per irrigation season.

- 970 Ac-Ft is approximately 16 percent of the irrigation storage in Pilcher Creek Reservoir.

Value of Combined Water Loss

- Using 50 percent of the total potential water loss for the water conveyance system, the amount of water loss in all systems may be 2,500 Ac-Ft per year. 2,500 Ac-Ft of water, valued at $10 per Ac-Ft, is a potential loss to District patrons of over $25,000 per year in stored water that they pay for but do not receive. A conservative estimate for the annual gross value of the crops that 2,500 Ac-Ft of water may help produce is approximately $1,000,000.

TABLES

POWDER VALLEY WATER CONTROL DISTRICT
SYSTEM OPTIMIZATION STUDY - 2013

COUGHANOUR DITCH

Location Identifier		Description	Approximate Distance Between Sections (feet)	Flow (cfs) Using HOBO Depth June 17, 2012 12:00	Flow (cfs) Using HOBO Depth June 19, 2012 12:00	Flow (cfs) Measured Depth and Velocity June 7, 2013
COG 1		5-foot Parshall Flume at Head Gate		23		
		Ditch Length - COG 1 to COG 2	5,270			
COG 2		ODFW Fence Line Above Tucker Flat Road		16		4
		Ditch Length - COG 2 to COG 3	8,540			
COG 3		Pratt Ditch Diversion Culvert at Tucker Flat Road		-4 12 [1]		
		Ditch Length - COG 3 to COG 4	3,520			
COG 4		At Pilcher Creek Reservoir Before Siphon		9		
		Ditch Length - Headgate to Pilcher Creek Dam **Miles**	**17,330** **3.3**			
COG 5		At Pilcher Creek Reservoir After Siphon and Release from the Reservoir			45 [2]	39
		Ditch Length - COG 5 to COG 6	5,880			
COG 6		Wilson Cabin Release Between PC Dam and the Parshall Flumes After Release to Wilson Cabin			-0.7 35	0 28
		Ditch Length - COG 6 to COG 7	6,540			
COG 7		West Parshall Flume at Drop to Pine Ditch and North Powder River			35	
		Ditch Length - COG 7 to Pine Ditch and NP River	50			
		Diverted to Pine Ditch and North Powder River			18.5	-4
		Ditch Length - Pine Ditch and NP River to COG 8	150			
COG 8		East Parshall Flume Below Drop to Pine Ditch and North Powder River			17	
		Ditch Length - COG 8 to COG 9	3,100			

anderson perry & associates, inc.

POWDER VALLEY
WATER CONTROL DISTRICT
SYSTEM OPTIMIZATION STUDY - 2013

COUGHANOUR DITCH

TABLE
1

		Release to Martin Ditch			-4.8	-4
		Hennings' Pumps			-1.0 [3]	
COG 9		Culvert at Driveway Crossing			11.1 [4]	19
		Ditch Length COG 9 to COG 10	6,690			
COG 10		At Upper P-2 Pipeline Inlet Structure			8.1	
		Ditch Length - Pilcher Creek Dam to Upper P-2 Inlet **Miles**	**22,410** **4.2**			
		Ditch Length COG 10 to COG 11	50			
COG 11		6-foot Parshall Flume after P-2 Inlet			2	
		Drop into Wolf Creek Reservoir	7,580			
		Ditch Length - Upper P-2 to Wolf Creek Reservoir **Miles**	**7,630** **1.4**			
		Total Ditch Length (feet):	**47,370**			
		Total Ditch Length (miles):	**9.0**			

Notes:
[1] The maximum water available assuming no water loss between COG 2 and COG 3. There is a depth measurement in the culvert but, due to the lack of a velocity measurement, a flow could not be calculated.

[2] The change in date to June 19 is due to the HOBO depth meters being moved downstream, below the PC Dam outlet.

[3] An estimated flow of 1.0 cfs was removed from the ditch for the Hennings' property pumps.

[4] Assuming no loss other than the diversion to the Martin Ditch and the Hennings' pumps.

anderson perry & associates, inc.

POWDER VALLEY
WATER CONTROL DISTRICT
SYSTEM OPTIMIZATION STUDY - 2013

COUGHANOUR DITCH

TABLE
1
CONT'D

POWDER VALLEY WATER CONTROL DISTRICT
SYSTEM OPTIMIZATION STUDY - 2013

MaHARRY DITCH

Location Identifier		Description	Approximate Distance Between Sections (feet)	Flow (cfs) Using HOBO Depth July 12, 2012 8:00	Flow (cfs) Measured Depth and Velocity June 7, 2013
		Meter Reading			24
MB 1		After Release From Wolf Creek Dam into MaHarry Ditch		38.5	24.5
		Ditch Length - Meter Reading to Release from Wolf Creek Dam	3,700		
MB 2		Surveyed Ditch Section on Newman's Property		32.0	27.5 [1]
		Ditch Length - MB 1 to MB 2	3,640		
MB 3		Surveyed Ditch Section on Miles' Property		30	21
		Ditch Length - MB 2 to MB 3	650		
		Ditch Length - Wolf Creek Dam to P-2 Inlet	**8,090**		
MB 4		HOBO Depth After P-2 Inlet		8	
		Ditch Length - MB 3 to MB 4	8,300		
MB 5		Culvert Above Confluence of MaHarry Ditch and Pine Ditch		[2]	
		Total Ditch Length (Feet)	**16,390**		
		Total Ditch Length (Miles)	**3.1**		

Notes:
[1] Velocity measurements questionalbe due to shallow water.
[2] There were no velocity measurements to correlate with the HOBO depths measured. Without velocity measurements, accurate flows could not be determined.

anderson perry & associates, inc.

POWDER VALLEY
WATER CONTROL DISTRICT
SYSTEM OPTIMIZATION STUDY - 2013

MaHARRY DITCH

TABLE
2

POWDER VALLEY WATER CONTROL DISTRICT
SYSTEM OPTIMIZATION STUDY - 2013

CARNES DITCH

Location Identifier		Description	Approximate Distance Between Sections (feet)	Flow (cfs) Using HOBO Depth June 12, 2012 8:00	Flow (cfs) Using HOBO Depth July 12, 2012 8:00	Flow (cfs) Measured Depth and Velocity June 7, 2013
CNS 1		Ditch Section Below Anthony Creek Head Gate		86.5 [1]	26	54
		Ditch Length - CNS 1 to CNS 2	4,160			
CNS 2		Ditch Section Between Head Gate and Dutch Creek		33	18	58 [2]
		Ditch Length - CNS 2 to CNS 3	3,540			
CNS 3		Dutch Creek 6-foot Parshall Flume		43 [3]	24 [3]	45 [3,4]
		Ditch Length - CNS 3 to CNS 4	3,620			
CNS 4		Between Dutch Creek and Tucker Flat Road [5]		29	21.5	35
		Ditch Length - CNS 4 to CNS 5	5,730			
CNS 5		Tucker Flat Road Culvert [6]		10 [7]	24 [8]	37 [8]
		Ditch Length - CNS 5 to CNS 6	5,650			
CNS 6		Just Above Where the Water is Diverted to Pilcher Creek Reservoir		51 [1]	17	38
		Total Ditch Length (Feet)	**22,700**			
		Total Ditch Length (Miles)	**4.3**			

Notes:
[1] Apparent measurement error.
[2] Velocity measurement questionable.
[3] The actual flow into or out of the Carnes Ditch at Dutch Creek is not known.
[4] Approximately 12 cfs is being diverted to Anthony Creek.
[5] There is known ditch loss between Dutch Creek and CNS 4. Water can be seen flowing below the ditch, just below the Parshall flume at Dutch Creek.
[6] There is known water loss between CNS 4 and CNS 5. The access road to the Coughanour head gate collects water from water running down the hillside from the Carnes Ditch.
[7] Some of the water is diverted around the main culvert in the bypass channel.
[8] Bypass channel is plugged.

FIGURE

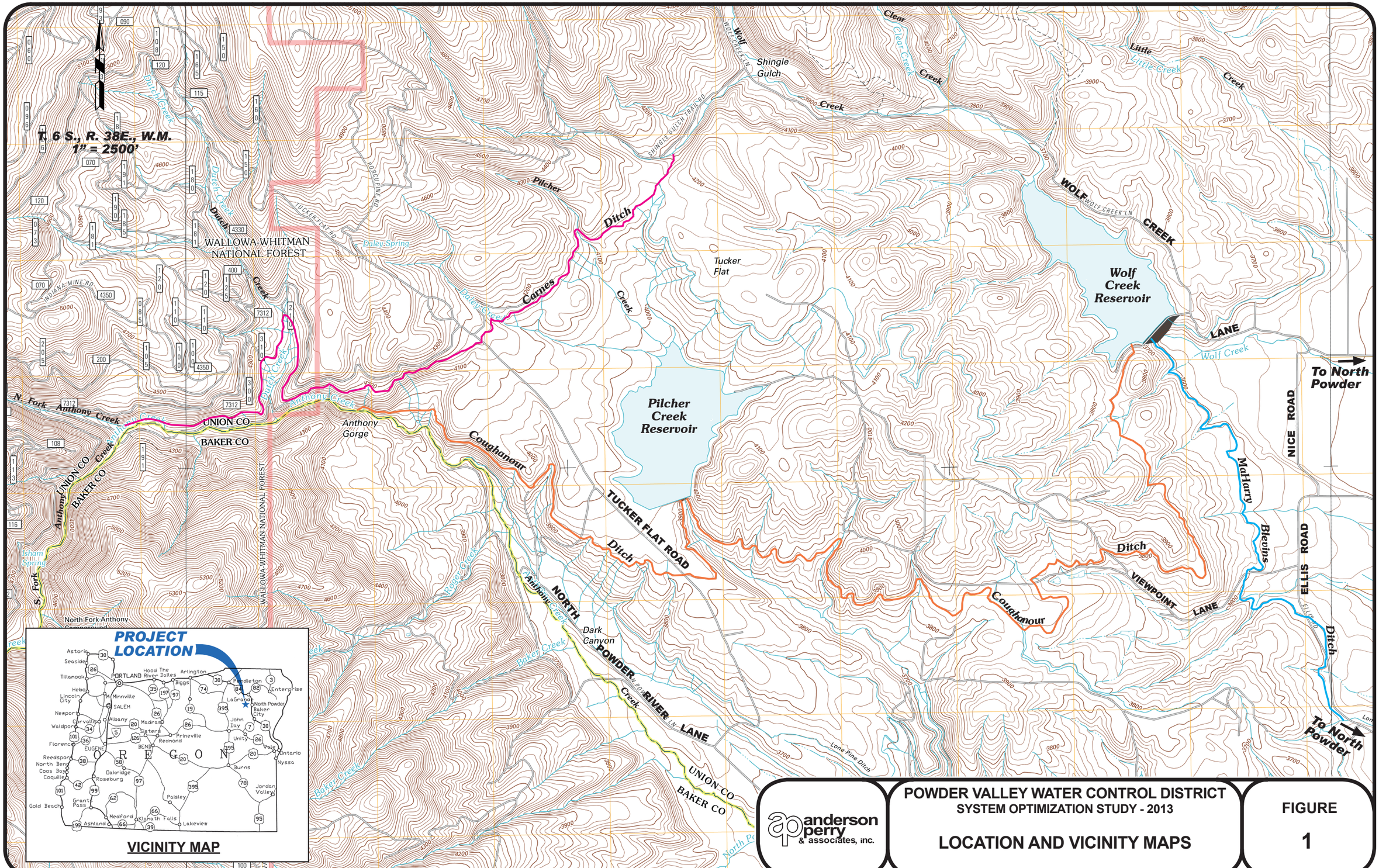

anderson perry & associates, inc.

POWDER VALLEY WATER CONTROL DISTRICT
SYSTEM OPTIMIZATION STUDY - 2013

LOCATION AND VICINITY MAPS

FIGURE 1

Job# 1199-475-020 Aug. 12, 2013 lbauer

MAP

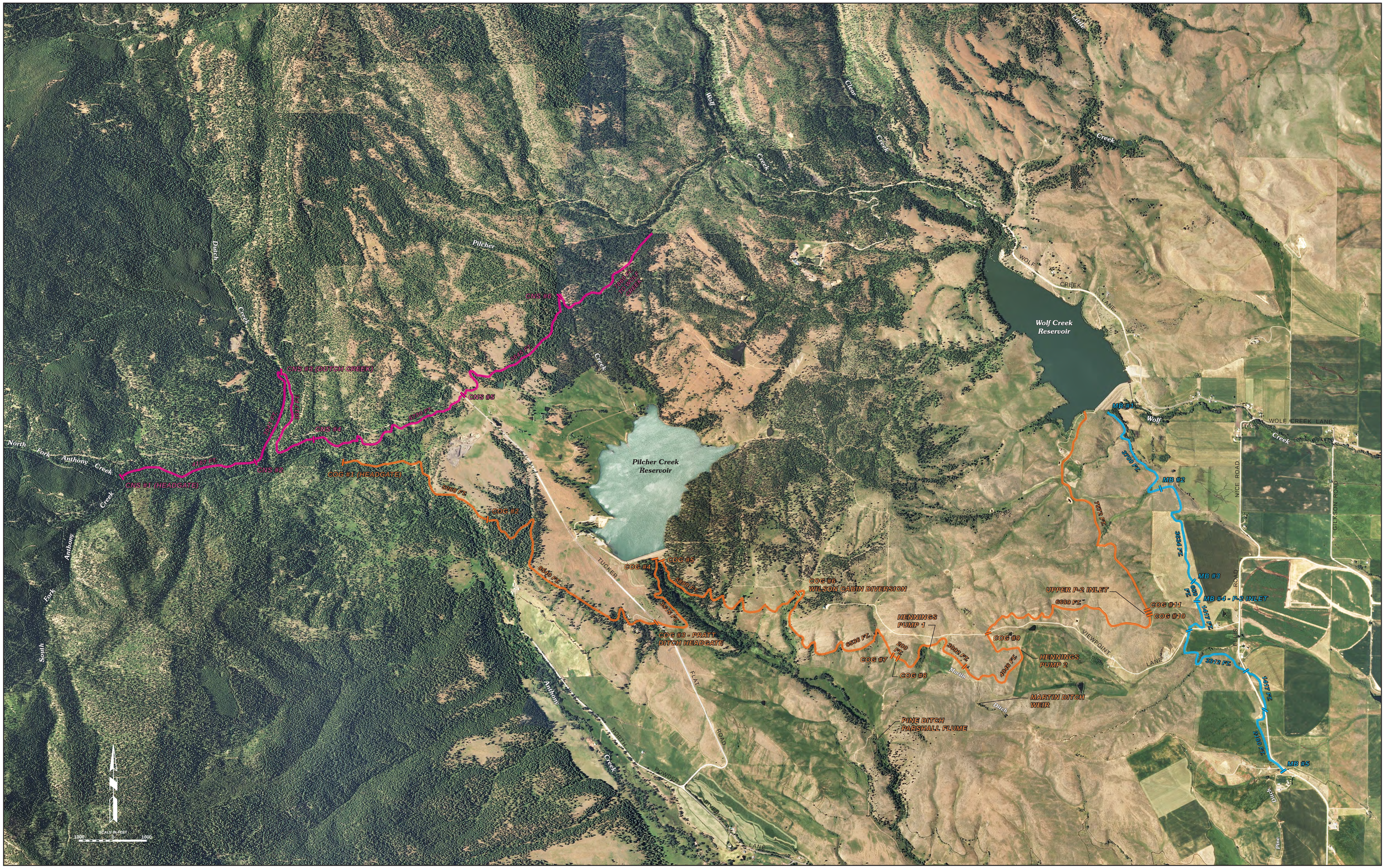

LEGEND

- MaHARRY-BLEVINS DITCH (MB)
- COUGHANOUR DITCH (COG)
- CARNES DITCH (CNS)
- MEASUREMENT LOCATION IDENTIFIERS

POWDER VALLEY WATER CONTROL DISTRICT

SYSTEM OPTIMIZATION STUDY - 2013

WATER CONVEYANCE SYSTEM

anderson perry & associates, inc.
engineering · surveying · natural resources

HEC-RAS MODELS

COUGHANOUR DITCH

HEC-RAS Plan: Plan 01 River: COG2 Reach: COG2

Reach	River Sta	Profile	Q Total	Min Ch El	W.S. Elev	Crit W.S.	E.G. Elev	E.G. Slope	Vel Chnl	Flow Area	Top Width	Froude # Chl
			(cfs)	(ft)	(ft)	(ft)	(ft)	(ft/ft)	(ft/s)	(sq ft)	(ft)	
COG2	71.63228	PF 1	5.00	3938.33	3938.98		3939.01	0.001665	1.28	3.91	10.03	0.36
COG2	71.63228	PF 2	5.50	3938.33	3939.01		3939.03	0.001611	1.31	4.19	10.10	0.36
COG2	71.63228	PF 3	6.00	3938.33	3939.04		3939.06	0.001568	1.34	4.47	10.16	0.36
COG2	71.63228	PF 4	6.50	3938.33	3939.06		3939.09	0.001535	1.37	4.73	10.21	0.36
COG2	71.63228	PF 5	7.00	3938.33	3939.09		3939.12	0.001502	1.40	4.99	10.27	0.35
COG2	71.63228	PF 6	7.50	3938.33	3939.11		3939.14	0.001473	1.43	5.25	10.32	0.35
COG2	71.63228	PF 7	8.00	3938.33	3939.13		3939.17	0.001457	1.46	5.49	10.38	0.35
COG2	71.63228	PF 8	8.50	3938.33	3939.16		3939.19	0.001451	1.49	5.71	10.42	0.35
COG2	71.63228	PF 9	9.00	3938.33	3939.18		3939.21	0.001446	1.52	5.93	10.47	0.36
COG2	71.63228	PF 10	9.50	3938.33	3939.20		3939.24	0.001440	1.54	6.15	10.52	0.36
COG2	71.63228	PF 11	10.00	3938.33	3939.22		3939.26	0.001435	1.57	6.36	10.56	0.36
COG2	71.63228	PF 12	10.50	3938.33	3939.24		3939.28	0.001430	1.60	6.57	10.60	0.36
COG2	71.63228	PF 13	11.00	3938.33	3939.26		3939.30	0.001430	1.62	6.77	10.65	0.36
COG2	71.63228	PF 14	11.50	3938.33	3939.28		3939.32	0.001427	1.65	6.98	10.69	0.36
COG2	71.63228	PF 15	12.00	3938.33	3939.29		3939.34	0.001424	1.67	7.17	10.73	0.36
COG2	71.63228	PF 16	12.50	3938.33	3939.31		3939.36	0.001421	1.70	7.37	10.77	0.36
COG2	71.63228	PF 17	13.00	3938.33	3939.33		3939.38	0.001417	1.72	7.57	10.81	0.36
COG2	71.63228	PF 18	13.50	3938.33	3939.35		3939.40	0.001414	1.74	7.76	10.85	0.36
COG2	71.63228	PF 19	14.00	3938.33	3939.37		3939.41	0.001412	1.76	7.95	10.89	0.36
COG2	71.63228	PF 20	14.50	3938.33	3939.38		3939.43	0.001409	1.78	8.14	10.93	0.36
COG2	71.63228	PF 21	15.00	3938.33	3939.40		3939.45	0.001407	1.80	8.33	10.96	0.36
COG2	71.63228	PF 22	15.50	3938.33	3939.42		3939.47	0.001404	1.82	8.51	11.00	0.36
COG2	71.63228	PF 23	16.00	3938.33	3939.43		3939.49	0.001404	1.84	8.69	11.04	0.37
COG2	71.63228	PF 24	16.50	3938.33	3939.45		3939.50	0.001401	1.86	8.87	11.07	0.37
COG2	71.63228	PF 25	17.00	3938.33	3939.47		3939.52	0.001401	1.88	9.05	11.11	0.37
COG2	71.63228	PF 26	17.50	3938.33	3939.48		3939.54	0.001399	1.90	9.23	11.14	0.37
COG2	71.63228	PF 27	18.00	3938.33	3939.50		3939.55	0.001396	1.91	9.41	11.18	0.37
COG2	71.63228	PF 28	18.50	3938.33	3939.51		3939.57	0.001394	1.93	9.58	11.21	0.37
COG2	71.63228	PF 29	19.00	3938.33	3939.53		3939.59	0.001392	1.95	9.75	11.25	0.37
COG2	71.63228	PF 30	19.50	3938.33	3939.54		3939.60	0.001393	1.97	9.92	11.28	0.37
COG2	71.63228	PF 31	20.00	3938.33	3939.56		3939.62	0.001391	1.98	10.09	11.32	0.37
COG2	71.63228	PF 32	20.50	3938.33	3939.57		3939.64	0.001390	2.00	10.26	11.35	0.37
COG2	71.63228	PF 33	21.00	3938.33	3939.59		3939.65	0.001387	2.01	10.43	11.38	0.37
COG2	71.63228	PF 34	21.50	3938.33	3939.60		3939.67	0.001385	2.03	10.60	11.41	0.37
COG2	71.63228	PF 35	22.00	3938.33	3939.62		3939.68	0.001383	2.04	10.77	11.45	0.37
COG2	71.63228	PF 36	22.50	3938.33	3939.63		3939.70	0.001384	2.06	10.93	11.48	0.37
COG2	71.63228	PF 37	23.00	3938.33	3939.65		3939.71	0.001383	2.07	11.09	11.51	0.37
COG2	71.63228	PF 38	23.50	3938.33	3939.66		3939.73	0.001383	2.09	11.25	11.54	0.37

HEC-RAS Plan: Plan 01 River: COG2 Reach: COG2 (Continued)

Reach	River Sta	Profile	Q Total	Min Ch El	W.S. Elev	Crit W.S.	E.G. Elev	E.G. Slope	Vel Chnl	Flow Area	Top Width	Froude # Chl
			(cfs)	(ft)	(ft)	(ft)	(ft)	(ft/ft)	(ft/s)	(sq ft)	(ft)	
COG2	71.63228	PF 39	24.00	3938.33	3939.67		3939.74	0.001381	2.10	11.41	11.57	0.37
COG2	71.63228	PF 40	24.50	3938.33	3939.69		3939.76	0.001379	2.12	11.57	11.60	0.37
COG2	71.63228	PF 41	25.00	3938.33	3939.70		3939.77	0.001380	2.13	11.73	11.63	0.37
COG2	71.63228	PF 42	25.50	3938.33	3939.72		3939.79	0.001377	2.14	11.89	11.66	0.37
COG2	71.63228	PF 43	26.00	3938.33	3939.73		3939.80	0.001379	2.16	12.04	11.69	0.37
COG2	71.63228	PF 44	26.50	3938.33	3939.74		3939.82	0.001378	2.17	12.20	11.72	0.38
COG2	71.63228	PF 45	27.00	3938.33	3939.76		3939.83	0.001377	2.19	12.36	11.75	0.38
COG2	71.63228	PF 46	27.50	3938.33	3939.77		3939.84	0.001375	2.20	12.51	11.78	0.38
COG2	71.63228	PF 47	28.00	3938.33	3939.78		3939.86	0.001375	2.21	12.67	11.81	0.38
COG2	71.63228	PF 48	28.50	3938.33	3939.79		3939.87	0.001373	2.22	12.82	11.84	0.38
COG2	71.63228	PF 49	29.00	3938.33	3939.81		3939.89	0.001373	2.24	12.97	11.87	0.38
COG2	71.63228	PF 50	29.50	3938.33	3939.82		3939.90	0.001372	2.25	13.13	11.89	0.38
COG2	71.63228	PF 51	30.00	3938.33	3939.83		3939.91	0.001371	2.26	13.28	11.92	0.38
COG2	71.63228	PF 52	30.50	3938.33	3939.85		3939.93	0.001371	2.27	13.43	11.95	0.38
COG2	71.63228	PF 53	31.00	3938.33	3939.86		3939.94	0.001370	2.28	13.57	11.98	0.38
COG2	71.63228	PF 54	31.50	3938.33	3939.87		3939.95	0.001369	2.29	13.73	12.01	0.38
COG2	71.63228	PF 55	32.00	3938.33	3939.88		3939.97	0.001368	2.31	13.87	12.03	0.38
COG2	71.63228	PF 56	32.50	3938.33	3939.90		3939.98	0.001369	2.32	14.02	12.06	0.38
COG2	71.63228	PF 57	33.00	3938.33	3939.91		3939.99	0.001368	2.33	14.17	12.09	0.38
COG2	71.63228	PF 58	33.50	3938.33	3939.92		3940.00	0.001367	2.34	14.31	12.11	0.38
COG2	71.63228	PF 59	34.00	3938.33	3939.93		3940.02	0.001367	2.35	14.46	12.14	0.38
COG2	71.63228	PF 60	34.50	3938.33	3939.94		3940.03	0.001365	2.36	14.61	12.17	0.38
COG2	71.63228	PF 61	4.50	3938.33	3938.95		3938.97	0.001758	1.25	3.60	9.96	0.37
COG2	71.63228	PF 62	4.00	3938.33	3938.92		3938.94	0.001843	1.22	3.28	9.80	0.37
COG2	71.63228	PF 63	3.50	3938.33	3938.88		3938.90	0.001913	1.19	2.95	9.48	0.37
COG2	71.63228	PF 64	3.00	3938.33	3938.85		3938.87	0.002000	1.15	2.62	9.13	0.38
COG2	71.63228	PF 65	2.50	3938.33	3938.81		3938.83	0.002099	1.10	2.27	8.77	0.38
COG2	71.63228	PF 66	2.00	3938.33	3938.77		3938.78	0.002218	1.04	1.92	8.38	0.38
COG2	71.63228	PF 67	1.50	3938.33	3938.72		3938.74	0.002346	0.97	1.55	7.95	0.39
COG2	71.63228	PF 68	1.00	3938.33	3938.67		3938.68	0.002268	0.86	1.16	6.87	0.37
COG2	71.63228	PF 69	0.50	3938.33	3938.61		3938.61	0.001690	0.65	0.77	5.60	0.31
COG2	71.63228	PF 70	0.25	3938.33	3938.56		3938.56	0.001247	0.49	0.51	4.57	0.26

HEC-RAS Plan:

Reach	River Sta	Profile	Q Total	Min Ch El	W.S. Elev	Crit W.S.	E.G. Elev	E.G. Slope	Vel Chnl	Flow Area	Top Width	Froude # Chl
			(cfs)	(ft)	(ft)	(ft)	(ft)	(ft/ft)	(ft/s)	(sq ft)	(ft)	
COG4	73.44897	PF 1	5.00	3892.07	3893.03		3893.03	0.000100	0.42	11.84	14.49	0.08
COG4	73.44897	PF 2	5.50	3892.07	3893.05		3893.05	0.000112	0.45	12.11	14.55	0.09
COG4	73.44897	PF 3	6.00	3892.07	3893.07		3893.07	0.000125	0.48	12.37	14.60	0.09
COG4	73.44897	PF 4	6.50	3892.07	3893.08		3893.09	0.000138	0.51	12.64	14.65	0.10
COG4	73.44897	PF 5	7.00	3892.07	3893.10		3893.11	0.000150	0.54	12.91	14.71	0.10
COG4	73.44897	PF 6	7.50	3892.07	3893.12		3893.13	0.000161	0.57	13.18	14.76	0.11
COG4	73.44897	PF 7	8.00	3892.07	3893.14		3893.14	0.000173	0.60	13.44	14.81	0.11
COG4	73.44897	PF 8	8.50	3892.07	3893.15		3893.16	0.000186	0.62	13.67	14.86	0.11
COG4	73.44897	PF 9	9.00	3892.07	3893.17		3893.18	0.000197	0.65	13.92	14.91	0.12
COG4	73.44897	PF 10	9.50	3892.07	3893.19		3893.20	0.000207	0.67	14.18	14.96	0.12
COG4	73.44897	PF 11	10.00	3892.07	3893.20		3893.21	0.000219	0.69	14.40	15.00	0.12
COG4	73.44897	PF 12	10.50	3892.07	3893.22		3893.23	0.000230	0.72	14.63	15.05	0.13
COG4	73.44897	PF 13	11.00	3892.07	3893.24		3893.24	0.000239	0.74	14.89	15.10	0.13
COG4	73.44897	PF 14	11.50	3892.07	3893.25		3893.26	0.000248	0.76	15.15	15.15	0.13
COG4	73.44897	PF 15	12.00	3892.07	3893.26		3893.27	0.000261	0.78	15.32	15.19	0.14
COG4	73.44897	PF 16	12.50	3892.07	3893.28		3893.29	0.000271	0.80	15.55	15.23	0.14
COG4	73.44897	PF 17	13.00	3892.07	3893.29		3893.30	0.000281	0.82	15.78	15.27	0.14
COG4	73.44897	PF 18	13.50	3892.07	3893.31		3893.32	0.000289	0.84	16.02	15.32	0.15
COG4	73.44897	PF 19	14.00	3892.07	3893.33		3893.34	0.000296	0.86	16.28	15.37	0.15
COG4	73.44897	PF 20	14.50	3892.07	3893.34		3893.35	0.000308	0.88	16.44	15.40	0.15
COG4	73.44897	PF 21	15.00	3892.07	3893.35		3893.36	0.000318	0.90	16.64	15.44	0.15
COG4	73.44897	PF 22	15.50	3892.07	3893.36		3893.38	0.000327	0.92	16.85	15.48	0.16
COG4	73.44897	PF 23	16.00	3892.07	3893.38		3893.39	0.000336	0.94	17.06	15.52	0.16
COG4	73.44897	PF 24	16.50	3892.07	3893.39		3893.40	0.000344	0.96	17.26	15.56	0.16
COG4	73.44897	PF 25	17.00	3892.07	3893.40		3893.42	0.000353	0.97	17.47	15.60	0.16
COG4	73.44897	PF 26	17.50	3892.07	3893.42		3893.43	0.000361	0.99	17.67	15.64	0.16
COG4	73.44897	PF 27	18.00	3892.07	3893.43		3893.45	0.000370	1.01	17.87	15.67	0.17
COG4	73.44897	PF 28	18.50	3892.07	3893.44		3893.46	0.000377	1.02	18.08	15.71	0.17
COG4	73.44897	PF 29	19.00	3892.07	3893.46		3893.47	0.000385	1.04	18.27	15.75	0.17
COG4	73.44897	PF 30	19.50	3892.07	3893.47		3893.48	0.000393	1.06	18.47	15.79	0.17
COG4	73.44897	PF 31	20.00	3892.07	3893.48		3893.50	0.000400	1.07	18.67	15.82	0.17
COG4	73.44897	PF 32	20.50	3892.07	3893.49		3893.51	0.000407	1.09	18.87	15.86	0.18
COG4	73.44897	PF 33	21.00	3892.07	3893.51		3893.52	0.000414	1.10	19.06	15.90	0.18
COG4	73.44897	PF 34	21.50	3892.07	3893.52		3893.54	0.000417	1.11	19.33	15.95	0.18
COG4	73.44897	PF 35	22.00	3892.07	3893.53		3893.55	0.000425	1.13	19.50	15.98	0.18
COG4	73.44897	PF 36	22.50	3892.07	3893.54		3893.56	0.000436	1.15	19.63	16.00	0.18
COG4	73.44897	PF 37	23.00	3892.07	3893.55		3893.57	0.000441	1.16	19.84	16.04	0.18
COG4	73.44897	PF 38	23.50	3892.07	3893.56		3893.59	0.000449	1.17	20.01	16.07	0.19

HEC-RAS Plan: (Continued)

Reach	River Sta	Profile	Q Total	Min Ch El	W.S. Elev	Crit W.S.	E.G. Elev	E.G. Slope	Vel Chnl	Flow Area	Top Width	Froude # Chl
			(cfs)	(ft)	(ft)	(ft)	(ft)	(ft/ft)	(ft/s)	(sq ft)	(ft)	
COG4	73.44897	PF 39	24.00	3892.07	3893.58		3893.60	0.000455	1.19	20.20	16.11	0.19
COG4	73.44897	PF 40	24.50	3892.07	3893.59		3893.61	0.000462	1.20	20.39	16.14	0.19

HEC-RAS Plan: Plan 01 River: Coughanour Reach: COG5

Reach	River Sta	Profile	Q Total	Min Ch El	W.S. Elev	Crit W.S.	E.G. Elev	E.G. Slope	Vel Chnl	Flow Area	Top Width	Froude # Chl
			(cfs)	(ft)	(ft)	(ft)	(ft)	(ft/ft)	(ft/s)	(sq ft)	(ft)	
COG5	73.96736	PF 1	16.50	3879.94	3881.29		3881.36	0.002847	2.16	7.65	11.17	0.46
COG5	73.96736	PF 2	17.00	3879.94	3881.31		3881.38	0.002822	2.17	7.83	11.26	0.46
COG5	73.96736	PF 3	17.50	3879.94	3881.32		3881.40	0.002799	2.18	8.02	11.35	0.46
COG5	73.96736	PF 4	18.00	3879.94	3881.34		3881.41	0.002779	2.20	8.20	11.44	0.46
COG5	73.96736	PF 5	18.50	3879.94	3881.35		3881.43	0.002761	2.21	8.38	11.53	0.46
COG5	73.96736	PF 6	19.00	3879.94	3881.37		3881.45	0.002744	2.22	8.56	11.62	0.46
COG5	73.96736	PF 7	19.50	3879.94	3881.38		3881.46	0.002726	2.23	8.74	11.71	0.46
COG5	73.96736	PF 8	20.00	3879.94	3881.40		3881.48	0.002708	2.24	8.91	11.79	0.45
COG5	73.96736	PF 9	20.50	3879.94	3881.41		3881.49	0.002690	2.25	9.09	11.88	0.45
COG5	73.96736	PF 10	21.00	3879.94	3881.43		3881.51	0.002673	2.27	9.27	11.97	0.45
COG5	73.96736	PF 11	21.50	3879.94	3881.44		3881.52	0.002655	2.28	9.45	12.05	0.45
COG5	73.96736	PF 12	22.00	3879.94	3881.46		3881.54	0.002640	2.29	9.62	12.13	0.45
COG5	73.96736	PF 13	22.50	3879.94	3881.47		3881.55	0.002617	2.30	9.80	12.17	0.45
COG5	73.96736	PF 14	23.00	3879.94	3881.49		3881.57	0.002592	2.31	9.97	12.21	0.45
COG5	73.96736	PF 15	23.50	3879.94	3881.50		3881.58	0.002565	2.32	10.14	12.24	0.45
COG5	73.96736	PF 16	24.00	3879.94	3881.52		3881.60	0.002539	2.33	10.32	12.27	0.45
COG5	73.96736	PF 17	24.50	3879.94	3881.53		3881.61	0.002518	2.34	10.49	12.30	0.45
COG5	73.96736	PF 18	25.00	3879.94	3881.54		3881.63	0.002497	2.35	10.65	12.33	0.44
COG5	73.96736	PF 19	25.50	3879.94	3881.56		3881.64	0.002476	2.36	10.82	12.36	0.44
COG5	73.96736	PF 20	26.00	3879.94	3881.57		3881.66	0.002452	2.36	11.00	12.39	0.44
COG5	73.96736	PF 21	26.50	3879.94	3881.58		3881.67	0.002439	2.38	11.15	12.42	0.44
COG5	73.96736	PF 22	27.00	3879.94	3881.60		3881.68	0.002422	2.39	11.32	12.45	0.44
COG5	73.96736	PF 23	27.50	3879.94	3881.61		3881.70	0.002398	2.39	11.49	12.48	0.44
COG5	73.96736	PF 24	28.00	3879.94	3881.62		3881.71	0.002380	2.40	11.66	12.51	0.44
COG5	73.96736	PF 25	28.50	3879.94	3881.64		3881.73	0.002365	2.41	11.82	12.53	0.44
COG5	73.96736	PF 26	29.00	3879.94	3881.65		3881.74	0.002347	2.42	11.98	12.56	0.44
COG5	73.96736	PF 27	29.50	3879.94	3881.66		3881.75	0.002329	2.43	12.15	12.59	0.44
COG5	73.96736	PF 28	30.00	3879.94	3881.68		3881.77	0.002313	2.44	12.31	12.62	0.43
COG5	73.96736	PF 29	30.50	3879.94	3881.69		3881.78	0.002298	2.45	12.47	12.65	0.43
COG5	73.96736	PF 30	31.00	3879.94	3881.70		3881.79	0.002284	2.45	12.63	12.67	0.43
COG5	73.96736	PF 31	31.50	3879.94	3881.71		3881.81	0.002269	2.46	12.79	12.70	0.43
COG5	73.96736	PF 32	32.00	3879.94	3881.73		3881.82	0.002256	2.47	12.95	12.73	0.43
COG5	73.96736	PF 33	32.50	3879.94	3881.74		3881.83	0.002243	2.48	13.11	12.76	0.43
COG5	73.96736	PF 34	33.00	3879.94	3881.75		3881.85	0.002228	2.49	13.27	12.78	0.43
COG5	73.96736	PF 35	33.50	3879.94	3881.76		3881.86	0.002219	2.50	13.42	12.81	0.43
COG5	73.96736	PF 36	34.00	3879.94	3881.78		3881.87	0.002202	2.50	13.59	12.84	0.43
COG5	73.96736	PF 37	34.50	3879.94	3881.79		3881.89	0.002195	2.51	13.74	12.86	0.43
COG5	73.96736	PF 38	35.00	3879.94	3881.80		3881.90	0.002183	2.52	13.89	12.89	0.43

HEC-RAS Plan: Plan 01 River: Coughanour Reach: COG5 (Continued)

Reach	River Sta	Profile	Q Total	Min Ch El	W.S. Elev	Crit W.S.	E.G. Elev	E.G. Slope	Vel Chnl	Flow Area	Top Width	Froude # Chl
			(cfs)	(ft)	(ft)	(ft)	(ft)	(ft/ft)	(ft/s)	(sq ft)	(ft)	
COG5	73.96736	PF 39	35.50	3879.94	3881.81		3881.91	0.002170	2.53	14.05	12.91	0.43
COG5	73.96736	PF 40	36.00	3879.94	3881.82		3881.92	0.002162	2.54	14.20	12.94	0.43
COG5	73.96736	PF 41	36.50	3879.94	3881.83		3881.94	0.002151	2.54	14.35	12.96	0.43
COG5	73.96736	PF 42	37.00	3879.94	3881.85		3881.95	0.002142	2.55	14.51	12.99	0.43
COG5	73.96736	PF 43	37.50	3879.94	3881.86		3881.96	0.002129	2.56	14.66	13.02	0.42
COG5	73.96736	PF 44	38.00	3879.94	3881.87		3881.97	0.002120	2.57	14.81	13.04	0.42
COG5	73.96736	PF 45	38.50	3879.94	3881.88		3881.98	0.002110	2.57	14.97	13.07	0.42
COG5	73.96736	PF 46	39.00	3879.94	3881.89		3882.00	0.002102	2.58	15.12	13.09	0.42
COG5	73.96736	PF 47	39.50	3879.94	3881.91		3882.01	0.002093	2.59	15.27	13.12	0.42
COG5	73.96736	PF 48	40.00	3879.94	3881.92		3882.02	0.002082	2.59	15.42	13.14	0.42
COG5	73.96736	PF 49	40.50	3879.94	3881.93		3882.03	0.002073	2.60	15.57	13.17	0.42
COG5	73.96736	PF 50	41.00	3879.94	3881.94		3882.05	0.002064	2.61	15.72	13.19	0.42
COG5	73.96736	PF 51	41.50	3879.94	3881.95		3882.06	0.002057	2.62	15.87	13.22	0.42
COG5	73.96736	PF 52	42.00	3879.94	3881.96		3882.07	0.002049	2.62	16.02	13.24	0.42
COG5	73.96736	PF 53	42.50	3879.94	3881.97		3882.08	0.002044	2.63	16.16	13.26	0.42
COG5	73.96736	PF 54	43.00	3879.94	3881.98		3882.09	0.002035	2.64	16.31	13.29	0.42
COG5	73.96736	PF 55	43.50	3879.94	3882.00		3882.10	0.002027	2.64	16.46	13.31	0.42
COG5	73.96736	PF 56	44.00	3879.94	3882.01		3882.12	0.002019	2.65	16.61	13.34	0.42
COG5	73.96736	PF 57	44.50	3879.94	3882.02		3882.13	0.002012	2.66	16.75	13.36	0.42
COG5	73.96736	PF 58	45.00	3879.94	3882.03		3882.14	0.002005	2.66	16.90	13.38	0.42
COG5	73.96736	PF 59	45.50	3879.94	3882.04		3882.15	0.001997	2.67	17.05	13.41	0.42
COG5	73.96736	PF 60	50.00	3879.94	3882.13		3882.25	0.001945	2.73	18.33	13.61	0.41
COG5	73.96736	PF 61	50.50	3879.94	3882.14		3882.26	0.001938	2.73	18.47	13.64	0.41
COG5	73.96736	PF 62	51.00	3879.94	3882.15		3882.27	0.001934	2.74	18.61	13.66	0.41
COG5	73.96736	PF 63	51.50	3879.94	3882.16		3882.28	0.001928	2.75	18.75	13.68	0.41
COG5	73.96736	PF 64	52.00	3879.94	3882.18		3882.29	0.001923	2.75	18.89	13.70	0.41
COG5	73.96736	PF 65	52.50	3879.94	3882.19		3882.30	0.001918	2.76	19.03	13.72	0.41
COG5	73.96736	PF 66	53.00	3879.94	3882.20		3882.31	0.001913	2.77	19.17	13.75	0.41
COG5	73.96736	PF 67	53.50	3879.94	3882.21		3882.32	0.001908	2.77	19.30	13.77	0.41
COG5	73.96736	PF 68	54.00	3879.94	3882.22		3882.34	0.001903	2.78	19.45	13.79	0.41
COG5	73.96736	PF 69	54.50	3879.94	3882.23		3882.35	0.001899	2.78	19.58	13.81	0.41
COG5	73.96736	PF 70	55.00	3879.94	3882.24		3882.36	0.001893	2.79	19.72	13.83	0.41
COG5	73.96736	PF 71	55.50	3879.94	3882.25		3882.37	0.001889	2.79	19.86	13.85	0.41
COG5	73.96736	PF 72	56.00	3879.94	3882.26		3882.38	0.001884	2.80	20.00	13.88	0.41
COG5	73.96736	PF 73	56.50	3879.94	3882.27		3882.39	0.001879	2.81	20.14	13.90	0.41
COG5	73.96736	PF 74	57.00	3879.94	3882.27		3882.40	0.001880	2.81	20.25	13.92	0.41
COG5	73.96736	PF 75	57.50	3879.94	3882.28		3882.41	0.001874	2.82	20.40	13.94	0.41
COG5	73.96736	PF 76	58.00	3879.94	3882.29		3882.42	0.001870	2.83	20.53	13.96	0.41

HEC-RAS Plan: Plan 01 River: Coughanour Reach: COG5 (Continued)

Reach	River Sta	Profile	Q Total	Min Ch El	W.S. Elev	Crit W.S.	E.G. Elev	E.G. Slope	Vel Chnl	Flow Area	Top Width	Froude # Chl
			(cfs)	(ft)	(ft)	(ft)	(ft)	(ft/ft)	(ft/s)	(sq ft)	(ft)	
COG5	73.96736	PF 77	58.50	3879.94	3882.30		3882.43	0.001867	2.83	20.66	13.98	0.41
COG5	73.96736	PF 78	59.00	3879.94	3882.31		3882.44	0.001862	2.84	20.80	14.00	0.41
COG5	73.96736	PF 79	59.50	3879.94	3882.32		3882.45	0.001859	2.84	20.93	14.02	0.41
COG5	73.96736	PF 80	60.00	3879.94	3882.33		3882.46	0.001854	2.85	21.07	14.04	0.41

HEC-RAS Plan: COG6 River: Coughanour Reach: COG6

Reach	River Sta	Profile	Q Total	Min Ch El	W.S. Elev	Crit W.S.	E.G. Elev	E.G. Slope	Vel Chnl	Flow Area	Top Width	Culv Vel DS	Culv WS Outlet
			(cfs)	(ft)	(ft)	(ft)	(ft)	(ft/ft)	(ft/s)	(sq ft)	(ft)	(ft/s)	(ft)
COG6	70 Culvert #1	PF 1	10.00									1.90	3865.77
COG6	70 Culvert #1	PF 2	10.50									1.95	3865.80
COG6	70 Culvert #1	PF 3	11.00									2.00	3865.82
COG6	70 Culvert #1	PF 4	11.50									2.05	3865.85
COG6	70 Culvert #1	PF 5	12.00									2.09	3865.87
COG6	70 Culvert #1	PF 6	12.50									2.14	3865.90
COG6	70 Culvert #1	PF 7	13.00									2.18	3865.92
COG6	70 Culvert #1	PF 8	13.50									2.23	3865.95
COG6	70 Culvert #1	PF 9	14.00									2.27	3865.97
COG6	70 Culvert #1	PF 10	14.50									2.31	3866.00
COG6	70 Culvert #1	PF 11	15.00									2.35	3866.02
COG6	70 Culvert #1	PF 12	15.50									2.39	3866.04
COG6	70 Culvert #1	PF 13	16.00									2.43	3866.06
COG6	70 Culvert #1	PF 14	16.50									2.47	3866.09
COG6	70 Culvert #1	PF 15	17.00									2.51	3866.11
COG6	70 Culvert #1	PF 16	17.50									2.55	3866.13
COG6	70 Culvert #1	PF 17	18.00									2.58	3866.15
COG6	70 Culvert #1	PF 18	18.50									2.62	3866.17
COG6	70 Culvert #1	PF 19	19.00									2.66	3866.19
COG6	70 Culvert #1	PF 20	19.50									2.69	3866.21
COG6	70 Culvert #1	PF 21	20.00									2.73	3866.23
COG6	70 Culvert #1	PF 22	20.50									2.76	3866.25
COG6	70 Culvert #1	PF 23	21.00									2.80	3866.27
COG6	70 Culvert #1	PF 24	21.50									2.83	3866.29
COG6	70 Culvert #1	PF 25	22.00									2.86	3866.31
COG6	70 Culvert #1	PF 26	22.50									2.89	3866.33
COG6	70 Culvert #1	PF 27	23.00									2.93	3866.35
COG6	70 Culvert #1	PF 28	23.50									2.96	3866.37
COG6	70 Culvert #1	PF 29	24.00									2.99	3866.39
COG6	70 Culvert #1	PF 30	24.50									3.02	3866.41
COG6	70 Culvert #1	PF 31	25.00									3.05	3866.42
COG6	70 Culvert #1	PF 32	25.50									3.08	3866.44
COG6	70 Culvert #1	PF 33	26.00									3.11	3866.46
COG6	70 Culvert #1	PF 34	26.50									3.14	3866.48
COG6	70 Culvert #1	PF 35	27.00									3.17	3866.49
COG6	70 Culvert #1	PF 36	27.50									3.20	3866.51
COG6	70 Culvert #1	PF 37	28.00									3.23	3866.53
COG6	70 Culvert #1	PF 38	28.50									3.26	3866.55
COG6	70 Culvert #1	PF 39	29.00									3.29	3866.56
COG6	70 Culvert #1	PF 40	29.50									3.32	3866.58
COG6	70 Culvert #1	PF 41	30.00									3.35	3866.60
COG6	70 Culvert #1	PF 42	30.50									3.37	3866.61
COG6	70 Culvert #1	PF 43	31.00									3.40	3866.63
COG6	70 Culvert #1	PF 44	31.50									3.43	3866.65
COG6	70 Culvert #1	PF 45	32.00									3.46	3866.66
COG6	70 Culvert #1	PF 46	32.50									3.48	3866.68

HEC-RAS Plan: COG6 River: Coughanour Reach: COG6 (Continued)

Reach	River Sta	Profile	Q Total	Min Ch El	W.S. Elev	Crit W.S.	E.G. Elev	E.G. Slope	Vel Chnl	Flow Area	Top Width	Culv Vel DS	Culv WS Outlet
			(cfs)	(ft)	(ft)	(ft)	(ft)	(ft/ft)	(ft/s)	(sq ft)	(ft)	(ft/s)	(ft)
COG6	70 Culvert #1	PF 47	33.00									3.51	3866.69
COG6	70 Culvert #1	PF 48	33.50									3.54	3866.71
COG6	70 Culvert #1	PF 49	34.00									3.56	3866.72
COG6	70 Culvert #1	PF 50	34.50									3.59	3866.74
COG6	70 Culvert #1	PF 51	35.00									3.62	3866.76
COG6	70 Culvert #1	PF 52	35.50									3.64	3866.77
COG6	70 Culvert #1	PF 53	36.00									3.67	3866.79
COG6	70 Culvert #1	PF 54	36.50									3.70	3866.80
COG6	70 Culvert #1	PF 55	37.00									3.72	3866.82
COG6	70 Culvert #1	PF 56	37.50									3.75	3866.83
COG6	70 Culvert #1	PF 57	38.00									3.77	3866.84
COG6	70 Culvert #1	PF 58	38.50									3.80	3866.86
COG6	70 Culvert #1	PF 59	39.00									3.83	3866.87
COG6	70 Culvert #1	PF 60	39.50									3.85	3866.89
COG6	70 Culvert #1	PF 61	40.00									3.87	3866.90
COG6	70 Culvert #1	PF 62	40.50									3.90	3866.92
COG6	70 Culvert #1	PF 63	41.00									3.92	3866.93
COG6	70 Culvert #1	PF 64	41.50									3.95	3866.94
COG6	70 Culvert #1	PF 65	42.00									3.93	3866.99
COG6	70 Culvert #1	PF 66	42.50									3.95	3867.00
COG6	70 Culvert #1	PF 67	43.00									3.98	3867.02
COG6	70 Culvert #1	PF 68	43.50									4.00	3867.03
COG6	70 Culvert #1	PF 69	44.00									4.02	3867.04
COG6	70 Culvert #1	PF 70	44.50									4.05	3867.06

HEC-RAS Plan: Plan 04 River: Coughanour Reach: COG9

Reach	River Sta	Profile	Q Total	Min Ch El	W.S. Elev	Crit W.S.	E.G. Elev	E.G. Slope	Vel Chnl	Flow Area	Top Width	Culv Vel DS	Culv WS Outlet
			(cfs)	(ft)	(ft)	(ft)	(ft)	(ft/ft)	(ft/s)	(sq ft)	(ft)	(ft/s)	(ft)
COG9	70 Culvert #1	PF 1	10.00									3.78	3822.06
COG9	70 Culvert #1	PF 2	10.50									3.84	3822.07
COG9	70 Culvert #1	PF 3	11.00									3.90	3822.09
COG9	70 Culvert #1	PF 4	11.50									3.96	3822.10
COG9	70 Culvert #1	PF 5	12.00									4.01	3822.11
COG9	70 Culvert #1	PF 6	12.50									4.06	3822.13
COG9	70 Culvert #1	PF 7	13.00									4.07	3822.15
COG9	70 Culvert #1	PF 8	13.50									4.08	3822.17
COG9	70 Culvert #1	PF 9	14.00									4.10	3822.19
COG9	70 Culvert #1	PF 10	14.50									4.11	3822.20
COG9	70 Culvert #1	PF 11	15.00									4.13	3822.22
COG9	70 Culvert #1	PF 12	15.50									4.14	3822.24
COG9	70 Culvert #1	PF 13	16.00									4.16	3822.26
COG9	70 Culvert #1	PF 14	16.50									4.17	3822.27
COG9	70 Culvert #1	PF 15	17.00									4.19	3822.29
COG9	70 Culvert #1	PF 16	17.50									4.20	3822.31
COG9	70 Culvert #1	PF 17	18.00									4.21	3822.33
COG9	70 Culvert #1	PF 18	18.50									4.22	3822.34
COG9	70 Culvert #1	PF 19	19.00									4.23	3822.36
COG9	70 Culvert #1	PF 20	19.50									4.24	3822.37
COG9	70 Culvert #1	PF 21	20.00									4.25	3822.39
COG9	70 Culvert #1	PF 22	20.50									4.27	3822.41
COG9	70 Culvert #1	PF 23	21.00									4.28	3822.42
COG9	70 Culvert #1	PF 24	21.50									4.30	3822.44
COG9	70 Culvert #1	PF 25	22.00									4.31	3822.45
COG9	70 Culvert #1	PF 26	22.50									4.32	3822.47
COG9	70 Culvert #1	PF 27	23.00									4.34	3822.48
COG9	70 Culvert #1	PF 28	23.50									4.35	3822.50
COG9	70 Culvert #1	PF 29	24.00									4.37	3822.51
COG9	70 Culvert #1	PF 30	24.50									4.38	3822.53
COG9	70 Culvert #1	PF 31	25.00									4.40	3822.54
COG9	70 Culvert #1	PF 32	25.50									4.42	3822.56
COG9	70 Culvert #1	PF 33	26.00									4.43	3822.57
COG9	70 Culvert #1	PF 34	26.50									4.45	3822.58
COG9	70 Culvert #1	PF 35	27.00									4.46	3822.60
COG9	70 Culvert #1	PF 36	27.50									4.48	3822.61
COG9	70 Culvert #1	PF 37	28.00									4.50	3822.63
COG9	70 Culvert #1	PF 38	28.50									4.51	3822.64
COG9	70 Culvert #1	PF 39	29.00									4.53	3822.65
COG9	70 Culvert #1	PF 40	29.50									4.55	3822.67
COG9	70 Culvert #1	PF 41	30.00									4.56	3822.68
COG9	70 Culvert #1	PF 42	30.50									4.58	3822.69
COG9	70 Culvert #1	PF 43	31.00									4.60	3822.71
COG9	70 Culvert #1	PF 44	31.50									4.62	3822.72
COG9	70 Culvert #1	PF 45	32.00									4.65	3822.73
COG9	70 Culvert #1	PF 46	32.50									4.67	3822.75

HEC-RAS Plan: Plan 04 River: Coughanour Reach: COG9 (Continued)

Reach	River Sta	Profile	Q Total	Min Ch El	W.S. Elev	Crit W.S.	E.G. Elev	E.G. Slope	Vel Chnl	Flow Area	Top Width	Culv Vel DS	Culv WS Outlet
			(cfs)	(ft)	(ft)	(ft)	(ft)	(ft/ft)	(ft/s)	(sq ft)	(ft)	(ft/s)	(ft)
COG9	70 Culvert #1	PF 47	33.00									4.69	3822.76
COG9	70 Culvert #1	PF 48	33.50									4.71	3822.77
COG9	70 Culvert #1	PF 49	34.00									4.73	3822.78
COG9	70 Culvert #1	PF 50	34.50									4.75	3822.80
COG9	70 Culvert #1	PF 51	35.00									4.77	3822.81
COG9	70 Culvert #1	PF 52	35.50									4.79	3822.82
COG9	70 Culvert #1	PF 53	36.00									4.81	3822.83
COG9	70 Culvert #1	PF 54	36.50									4.83	3822.84
COG9	70 Culvert #1	PF 55	37.00									4.85	3822.86
COG9	70 Culvert #1	PF 56	37.50									4.87	3822.87
COG9	70 Culvert #1	PF 57	38.00									4.89	3822.88
COG9	70 Culvert #1	PF 58	38.50									4.91	3822.89
COG9	70 Culvert #1	PF 59	39.00									4.93	3822.90
COG9	70 Culvert #1	PF 60	39.50									4.95	3822.92
COG9	70 Culvert #1	PF 61	40.00									4.97	3822.93
COG9	70 Culvert #1	PF 62	40.50									4.99	3822.94
COG9	70 Culvert #1	PF 63	41.00									5.01	3822.95
COG9	70 Culvert #1	PF 64	41.50									5.03	3822.96
COG9	70 Culvert #1	PF 65	42.00									5.05	3822.97
COG9	70 Culvert #1	PF 66	42.50									5.07	3822.98
COG9	70 Culvert #1	PF 67	43.00									5.09	3822.99
COG9	70 Culvert #1	PF 68	43.50									5.10	3823.01
COG9	70 Culvert #1	PF 69	44.00									5.12	3823.02
COG9	70 Culvert #1	PF 70	44.50									5.14	3823.03

MaHARRY DITCH

HEC-RAS Plan: Plan 03 River: MaHarry Reach: MB1

Reach	River Sta	Profile	Q Total	Min Ch El	W.S. Elev	Crit W.S.	E.G. Elev	E.G. Slope	Vel Chnl	Flow Area	Top Width	Froude # Chl
			(cfs)	(ft)	(ft)	(ft)	(ft)	(ft/ft)	(ft/s)	(sq ft)	(ft)	
MB1	75.12576	PF 1	15.00	3620.69	3622.20		3622.24	0.001046	1.68	8.95	8.39	0.29
MB1	75.12576	PF 2	15.50	3620.69	3622.22		3622.27	0.001034	1.69	9.19	8.46	0.29
MB1	75.12576	PF 3	16.00	3620.69	3622.25		3622.30	0.001022	1.70	9.43	8.52	0.28
MB1	75.12576	PF 4	16.50	3620.69	3622.28		3622.33	0.001012	1.71	9.67	8.59	0.28
MB1	75.12576	PF 5	17.00	3620.69	3622.31		3622.35	0.001001	1.71	9.91	8.65	0.28
MB1	75.12576	PF 6	17.50	3620.69	3622.34		3622.38	0.000993	1.72	10.15	8.71	0.28
MB1	75.12576	PF 7	18.00	3620.69	3622.36		3622.41	0.000983	1.73	10.39	8.77	0.28
MB1	75.12576	PF 8	18.50	3620.69	3622.39		3622.44	0.000974	1.74	10.62	8.83	0.28
MB1	75.12576	PF 9	19.00	3620.69	3622.42		3622.46	0.000967	1.75	10.85	8.89	0.28
MB1	75.12576	PF 10	19.50	3620.69	3622.44		3622.49	0.000959	1.76	11.09	8.95	0.28
MB1	75.12576	PF 11	20.00	3620.69	3622.47		3622.52	0.000953	1.77	11.31	9.01	0.28
MB1	75.12576	PF 12	20.50	3620.69	3622.49		3622.54	0.000947	1.78	11.54	9.07	0.28
MB1	75.12576	PF 13	21.00	3620.69	3622.52		3622.57	0.000939	1.78	11.77	9.12	0.28
MB1	75.12576	PF 14	21.50	3620.69	3622.54		3622.59	0.000933	1.79	12.00	9.18	0.28
MB1	75.12576	PF 15	22.00	3620.69	3622.57		3622.62	0.000926	1.80	12.22	9.24	0.28
MB1	75.12576	PF 16	22.50	3620.69	3622.59		3622.64	0.000920	1.81	12.45	9.29	0.28
MB1	75.12576	PF 17	23.00	3620.69	3622.62		3622.67	0.000915	1.81	12.67	9.35	0.27
MB1	75.12576	PF 18	23.50	3620.69	3622.64		3622.69	0.000909	1.82	12.90	9.40	0.27
MB1	75.12576	PF 19	24.00	3620.69	3622.66		3622.72	0.000903	1.83	13.12	9.46	0.27
MB1	75.12576	PF 20	24.50	3620.69	3622.69		3622.74	0.000897	1.84	13.35	9.51	0.27
MB1	75.12576	PF 21	25.00	3620.69	3622.71		3622.76	0.000893	1.84	13.56	9.56	0.27
MB1	75.12576	PF 22	25.50	3620.69	3622.73		3622.79	0.000887	1.85	13.79	9.62	0.27
MB1	75.12576	PF 23	26.00	3620.69	3622.76		3622.81	0.000883	1.86	14.00	9.67	0.27
MB1	75.12576	PF 24	26.50	3620.69	3622.78		3622.83	0.000879	1.86	14.22	9.72	0.27
MB1	75.12576	PF 25	27.00	3620.69	3622.80		3622.85	0.000875	1.87	14.44	9.77	0.27
MB1	75.12576	PF 26	27.50	3620.69	3622.82		3622.88	0.000870	1.88	14.66	9.82	0.27
MB1	75.12576	PF 27	28.00	3620.69	3622.84		3622.90	0.000866	1.88	14.87	9.87	0.27
MB1	75.12576	PF 28	28.50	3620.69	3622.87		3622.92	0.000862	1.89	15.09	9.92	0.27
MB1	75.12576	PF 29	29.00	3620.69	3622.89		3622.94	0.000858	1.90	15.30	9.97	0.27
MB1	75.12576	PF 30	29.50	3620.69	3622.91		3622.96	0.000855	1.90	15.51	10.02	0.27
MB1	75.12576	PF 31	30.00	3620.69	3622.93		3622.99	0.000851	1.91	15.72	10.06	0.27
MB1	75.12576	PF 32	30.50	3620.69	3622.95		3623.01	0.000847	1.91	15.94	10.11	0.27
MB1	75.12576	PF 33	31.00	3620.69	3622.97		3623.03	0.000844	1.92	16.15	10.16	0.27
MB1	75.12576	PF 34	31.50	3620.69	3622.99		3623.05	0.000842	1.93	16.35	10.21	0.27
MB1	75.12576	PF 35	32.00	3620.69	3623.01		3623.07	0.000838	1.93	16.56	10.25	0.27
MB1	75.12576	PF 36	32.50	3620.69	3623.03		3623.09	0.000835	1.94	16.77	10.30	0.27
MB1	75.12576	PF 37	33.00	3620.69	3623.05		3623.11	0.000832	1.94	16.98	10.34	0.27
MB1	75.12576	PF 38	33.50	3620.69	3623.07		3623.13	0.000828	1.95	17.19	10.39	0.27

HEC-RAS Plan: Plan 03 River: MaHarry Reach: MB1 (Continued)

Reach	River Sta	Profile	Q Total	Min Ch El	W.S. Elev	Crit W.S.	E.G. Elev	E.G. Slope	Vel Chnl	Flow Area	Top Width	Froude # Chl
			(cfs)	(ft)	(ft)	(ft)	(ft)	(ft/ft)	(ft/s)	(sq ft)	(ft)	
MB1	75.12576	PF 39	34.00	3620.69	3623.09		3623.15	0.000825	1.95	17.40	10.44	0.27
MB1	75.12576	PF 40	34.50	3620.69	3623.11		3623.17	0.000823	1.96	17.60	10.48	0.27
MB1	75.12576	PF 41	35.00	3620.69	3623.13		3623.19	0.000819	1.96	17.81	10.53	0.27
MB1	75.12576	PF 42	35.50	3620.69	3623.15		3623.21	0.000817	1.97	18.02	10.57	0.27
MB1	75.12576	PF 43	36.00	3620.69	3623.17		3623.23	0.000814	1.98	18.22	10.62	0.27
MB1	75.12576	PF 44	36.50	3620.69	3623.19		3623.25	0.000811	1.98	18.43	10.66	0.27
MB1	75.12576	PF 45	37.00	3620.69	3623.21		3623.27	0.000809	1.99	18.63	10.70	0.27
MB1	75.12576	PF 46	37.50	3620.69	3623.23		3623.29	0.000806	1.99	18.83	10.75	0.27
MB1	75.12576	PF 47	38.00	3620.69	3623.25		3623.31	0.000805	2.00	19.02	10.79	0.27
MB1	75.12576	PF 48	38.50	3620.69	3623.27		3623.33	0.000802	2.00	19.23	10.83	0.26
MB1	75.12576	PF 49	39.00	3620.69	3623.28		3623.35	0.000800	2.01	19.43	10.87	0.26
MB1	75.12576	PF 50	39.50	3620.69	3623.30		3623.37	0.000797	2.01	19.63	10.91	0.26

HEC-RAS Plan: MB2 River: MB Reach: MB2

Reach	River Sta	Profile	Q Total	Min Ch El	W.S. Elev	Crit W.S.	E.G. Elev	E.G. Slope	Vel Chnl	Flow Area	Top Width	Froude # Chl
			(cfs)	(ft)	(ft)	(ft)	(ft)	(ft/ft)	(ft/s)	(sq ft)	(ft)	
MB2	78.15044	PF 1	15.00	3617.58	3618.33		3618.42	0.006254	2.30	6.53	12.98	0.57
MB2	78.15044	PF 2	15.50	3617.58	3618.35		3618.43	0.005975	2.29	6.77	13.05	0.56
MB2	78.15044	PF 3	16.00	3617.58	3618.37		3618.45	0.005708	2.28	7.01	13.13	0.55
MB2	78.15044	PF 4	16.50	3617.58	3618.39		3618.47	0.005491	2.28	7.24	13.20	0.54
MB2	78.15044	PF 5	17.00	3617.58	3618.41		3618.49	0.005266	2.27	7.48	13.27	0.53
MB2	78.15044	PF 6	17.50	3617.58	3618.43		3618.51	0.005069	2.27	7.72	13.34	0.53
MB2	78.15044	PF 7	18.00	3617.58	3618.44		3618.52	0.004903	2.26	7.95	13.41	0.52
MB2	78.15044	PF 8	18.50	3617.58	3618.46		3618.54	0.004734	2.26	8.19	13.48	0.51
MB2	78.15044	PF 9	19.00	3617.58	3618.48		3618.56	0.004579	2.26	8.42	13.55	0.50
MB2	78.15044	PF 10	19.50	3617.58	3618.49		3618.57	0.004433	2.25	8.66	13.62	0.50
MB2	78.15044	PF 11	20.00	3617.58	3618.51		3618.59	0.004299	2.25	8.89	13.69	0.49
MB2	78.15044	PF 12	20.50	3617.58	3618.53		3618.61	0.004176	2.25	9.12	13.76	0.49
MB2	78.15044	PF 13	21.00	3617.58	3618.55		3618.62	0.004059	2.25	9.35	13.83	0.48
MB2	78.15044	PF 14	21.50	3617.58	3618.56		3618.64	0.003947	2.24	9.59	13.89	0.48
MB2	78.15044	PF 15	22.00	3617.58	3618.58		3618.66	0.003853	2.24	9.81	13.96	0.47
MB2	78.15044	PF 16	22.50	3617.58	3618.59		3618.67	0.003761	2.24	10.04	14.02	0.47
MB2	78.15044	PF 17	23.00	3617.58	3618.61		3618.69	0.003669	2.24	10.27	14.09	0.46
MB2	78.15044	PF 18	23.50	3617.58	3618.63		3618.70	0.003588	2.24	10.49	14.15	0.46
MB2	78.15044	PF 19	24.00	3617.58	3618.64		3618.72	0.003507	2.24	10.72	14.22	0.45
MB2	78.15044	PF 20	24.50	3617.58	3618.66		3618.74	0.003431	2.24	10.95	14.28	0.45
MB2	78.15044	PF 21	25.00	3617.58	3618.67		3618.75	0.003361	2.24	11.17	14.34	0.45
MB2	78.15044	PF 22	25.50	3617.58	3618.69		3618.77	0.003293	2.24	11.39	14.40	0.44
MB2	78.15044	PF 23	26.00	3617.58	3618.71		3618.78	0.003236	2.24	11.61	14.46	0.44
MB2	78.15044	PF 24	26.50	3617.58	3618.72		3618.80	0.003178	2.24	11.83	14.52	0.44
MB2	78.15044	PF 25	27.00	3617.58	3618.74		3618.81	0.003119	2.24	12.05	14.59	0.43
MB2	78.15044	PF 26	27.50	3617.58	3618.75		3618.83	0.003063	2.24	12.27	14.65	0.43
MB2	78.15044	PF 27	28.00	3617.58	3618.77		3618.84	0.003010	2.24	12.50	14.71	0.43
MB2	78.15044	PF 28	28.50	3617.58	3618.78		3618.86	0.002960	2.24	12.71	14.77	0.43
MB2	78.15044	PF 29	29.00	3617.58	3618.80		3618.87	0.002911	2.24	12.94	14.83	0.42
MB2	78.15044	PF 30	29.50	3617.58	3618.81		3618.89	0.002868	2.24	13.15	14.88	0.42
MB2	78.15044	PF 31	30.00	3617.58	3618.82		3618.90	0.002824	2.24	13.37	14.94	0.42
MB2	78.15044	PF 32	30.50	3617.58	3618.84		3618.92	0.002783	2.25	13.58	15.00	0.42
MB2	78.15044	PF 33	31.00	3617.58	3618.85		3618.93	0.002745	2.25	13.80	15.06	0.41
MB2	78.15044	PF 34	31.50	3617.58	3618.87		3618.95	0.002707	2.25	14.01	15.11	0.41
MB2	78.15044	PF 35	32.00	3617.58	3618.88		3618.96	0.002670	2.25	14.22	15.17	0.41
MB2	78.15044	PF 36	32.50	3617.58	3618.90		3618.97	0.002634	2.25	14.44	15.23	0.41
MB2	78.15044	PF 37	33.00	3617.58	3618.91		3618.99	0.002591	2.25	14.67	15.29	0.40
MB2	78.15044	PF 38	33.50	3617.58	3618.93		3619.00	0.002547	2.25	14.91	15.35	0.40

HEC-RAS Plan: MB2 River: MB Reach: MB2 (Continued)

Reach	River Sta	Profile	Q Total	Min Ch El	W.S. Elev	Crit W.S.	E.G. Elev	E.G. Slope	Vel Chnl	Flow Area	Top Width	Froude # Chl
			(cfs)	(ft)	(ft)	(ft)	(ft)	(ft/ft)	(ft/s)	(sq ft)	(ft)	
MB2	78.15044	PF 39	34.00	3617.58	3618.94		3619.02	0.002509	2.25	15.13	15.41	0.40
MB2	78.15044	PF 40	34.50	3617.58	3618.96		3619.03	0.002471	2.25	15.36	15.47	0.40
MB2	78.15044	PF 41	0.50	3617.58	3617.73	3617.73	3617.77	0.034932	1.55	0.32	4.25	0.99
MB2	78.15044	PF 42	35.50	3617.58	3618.99		3619.06	0.002398	2.24	15.82	15.59	0.39
MB2	78.15044	PF 43	36.00	3617.58	3619.00		3619.08	0.002364	2.24	16.05	15.65	0.39
MB2	78.15044	PF 44	36.50	3617.58	3619.01		3619.09	0.002329	2.24	16.28	15.70	0.39
MB2	78.15044	PF 45	37.00	3617.58	3619.03		3619.11	0.002293	2.24	16.52	15.77	0.39
MB2	78.15044	PF 46	37.50	3617.58	3619.05		3619.12	0.002257	2.24	16.76	15.83	0.38
MB2	78.15044	PF 47	38.00	3617.58	3619.06		3619.14	0.002227	2.24	16.99	15.88	0.38
MB2	78.15044	PF 48	38.50	3617.58	3619.07		3619.15	0.002204	2.24	17.20	15.94	0.38
MB2	78.15044	PF 49	39.00	3617.58	3619.09		3619.16	0.002179	2.24	17.42	15.99	0.38
MB2	78.15044	PF 50	39.50	3617.58	3619.10		3619.18	0.002155	2.24	17.64	16.05	0.38

HEC-RAS Plan: MB3 River: MB Reach: MB3

Reach	River Sta	Profile	Q Total	Min Ch El	W.S. Elev	Crit W.S.	E.G. Elev	E.G. Slope	Vel Chnl	Flow Area	Top Width	Froude # Chl
			(cfs)	(ft)	(ft)	(ft)	(ft)	(ft/ft)	(ft/s)	(sq ft)	(ft)	
MB3	76.10429	PF 1	15.00	3612.62	3613.92		3613.95	0.001004	1.30	11.58	10.84	0.22
MB3	76.10429	PF 2	15.50	3612.62	3613.95		3613.97	0.000995	1.31	11.87	10.90	0.22
MB3	76.10429	PF 3	16.00	3612.62	3613.97		3614.00	0.000988	1.32	12.16	10.96	0.22
MB3	76.10429	PF 4	16.50	3612.62	3614.00		3614.03	0.000980	1.33	12.45	11.02	0.22
MB3	76.10429	PF 5	17.00	3612.62	3614.03		3614.05	0.000973	1.33	12.73	11.08	0.22
MB3	76.10429	PF 6	17.50	3612.62	3614.05		3614.08	0.000966	1.34	13.02	11.13	0.22
MB3	76.10429	PF 7	18.00	3612.62	3614.08		3614.10	0.000961	1.35	13.29	11.19	0.22
MB3	76.10429	PF 8	18.50	3612.62	3614.10		3614.13	0.000954	1.36	13.58	11.24	0.22
MB3	76.10429	PF 9	19.00	3612.62	3614.13		3614.15	0.000950	1.37	13.85	11.30	0.22
MB3	76.10429	PF 10	19.50	3612.62	3614.15		3614.18	0.000944	1.38	14.12	11.35	0.22
MB3	76.10429	PF 11	20.00	3612.62	3614.17		3614.20	0.000939	1.39	14.39	11.40	0.22
MB3	76.10429	PF 12	20.50	3612.62	3614.20		3614.23	0.000934	1.40	14.67	11.45	0.22
MB3	76.10429	PF 13	21.00	3612.62	3614.22		3614.25	0.000931	1.41	14.93	11.50	0.22
MB3	76.10429	PF 14	21.50	3612.62	3614.24		3614.27	0.000926	1.42	15.19	11.56	0.22
MB3	76.10429	PF 15	22.00	3612.62	3614.27		3614.30	0.000923	1.42	15.46	11.61	0.22
MB3	76.10429	PF 16	22.50	3612.62	3614.29		3614.32	0.000918	1.43	15.73	11.66	0.22
MB3	76.10429	PF 17	23.00	3612.62	3614.31		3614.34	0.000915	1.44	15.98	11.70	0.22
MB3	76.10429	PF 18	23.50	3612.62	3614.33		3614.37	0.000912	1.45	16.24	11.76	0.22
MB3	76.10429	PF 19	24.00	3612.62	3614.35		3614.39	0.000910	1.45	16.50	11.82	0.22
MB3	76.10429	PF 20	24.50	3612.62	3614.38		3614.41	0.000909	1.46	16.75	11.89	0.22
MB3	76.10429	PF 21	25.00	3612.62	3614.40		3614.43	0.000906	1.47	17.01	11.96	0.22
MB3	76.10429	PF 22	25.50	3612.62	3614.42		3614.45	0.000905	1.48	17.26	12.02	0.22
MB3	76.10429	PF 23	26.00	3612.62	3614.44		3614.47	0.000903	1.48	17.52	12.09	0.22
MB3	76.10429	PF 24	26.50	3612.62	3614.46		3614.50	0.000901	1.49	17.77	12.16	0.22
MB3	76.10429	PF 25	27.00	3612.62	3614.48		3614.52	0.000900	1.50	18.02	12.22	0.22
MB3	76.10429	PF 26	27.50	3612.62	3614.50		3614.54	0.000898	1.51	18.27	12.28	0.22
MB3	76.10429	PF 27	28.00	3612.62	3614.52		3614.56	0.000896	1.51	18.52	12.35	0.22
MB3	76.10429	PF 28	28.50	3612.62	3614.54		3614.58	0.000895	1.52	18.77	12.41	0.22
MB3	76.10429	PF 29	29.00	3612.62	3614.56		3614.60	0.000893	1.52	19.02	12.47	0.22
MB3	76.10429	PF 30	29.50	3612.62	3614.58		3614.62	0.000891	1.53	19.26	12.54	0.22
MB3	76.10429	PF 31	30.00	3612.62	3614.60		3614.64	0.000890	1.54	19.51	12.60	0.22
MB3	76.10429	PF 32	30.50	3612.62	3614.62		3614.66	0.000889	1.54	19.75	12.66	0.22
MB3	76.10429	PF 33	31.00	3612.62	3614.64		3614.68	0.000887	1.55	20.00	12.72	0.22
MB3	76.10429	PF 34	31.50	3612.62	3614.66		3614.70	0.000885	1.56	20.24	12.78	0.22
MB3	76.10429	PF 35	32.00	3612.62	3614.68		3614.72	0.000884	1.56	20.49	12.84	0.22
MB3	76.10429	PF 36	32.50	3612.62	3614.70		3614.74	0.000882	1.57	20.73	12.90	0.22
MB3	76.10429	PF 37	33.00	3612.62	3614.72		3614.75	0.000881	1.57	20.97	12.95	0.22
MB3	76.10429	PF 38	33.50	3612.62	3614.73		3614.77	0.000879	1.58	21.21	13.01	0.22

HEC-RAS Plan: MB3 River: MB Reach: MB3 (Continued)

Reach	River Sta	Profile	Q Total	Min Ch El	W.S. Elev	Crit W.S.	E.G. Elev	E.G. Slope	Vel Chnl	Flow Area	Top Width	Froude # Chl
			(cfs)	(ft)	(ft)	(ft)	(ft)	(ft/ft)	(ft/s)	(sq ft)	(ft)	
MB3	76.10429	PF 39	34.00	3612.62	3614.75		3614.79	0.000878	1.58	21.46	13.07	0.22
MB3	76.10429	PF 40	34.50	3612.62	3614.77		3614.81	0.000876	1.59	21.70	13.13	0.22
MB3	76.10429	PF 41	35.00	3612.62	3614.79		3614.83	0.000875	1.60	21.94	13.19	0.22
MB3	76.10429	PF 42	35.50	3612.62	3614.81		3614.85	0.000873	1.60	22.18	13.24	0.22
MB3	76.10429	PF 43	36.00	3612.62	3614.83		3614.87	0.000872	1.61	22.41	13.30	0.22
MB3	76.10429	PF 44	36.50	3612.62	3614.84		3614.88	0.000871	1.61	22.65	13.35	0.22
MB3	76.10429	PF 45	37.00	3612.62	3614.86		3614.90	0.000869	1.62	22.89	13.41	0.22
MB3	76.10429	PF 46	37.50	3612.62	3614.88		3614.92	0.000868	1.62	23.12	13.47	0.22
MB3	76.10429	PF 47	38.00	3612.62	3614.90		3614.94	0.000867	1.63	23.36	13.52	0.22
MB3	76.10429	PF 48	38.50	3612.62	3614.91		3614.95	0.000865	1.63	23.59	13.57	0.22
MB3	76.10429	PF 49	39.00	3612.62	3614.93		3614.97	0.000864	1.64	23.83	13.63	0.22
MB3	76.10429	PF 50	39.50	3612.62	3614.95		3614.99	0.000863	1.64	24.06	13.68	0.22

CARNES DITCH

HEC-RAS Plan: Plan 01 River: Carnes Reach: CNS1

Reach	River Sta	Profile	Q Total	Min Ch El	W.S. Elev	Crit W.S.	E.G. Elev	E.G. Slope	Vel Chnl	Flow Area	Top Width	Froude # Chl
			(cfs)	(ft)	(ft)	(ft)	(ft)	(ft/ft)	(ft/s)	(sq ft)	(ft)	
CNS1	71.13422	PF 1	20.00	997.29	997.88	997.88	998.10	0.014429	3.72	5.38	12.55	1.00
CNS1	71.13422	PF 2	20.50	997.29	997.89	997.89	998.11	0.014280	3.74	5.49	12.57	1.00
CNS1	71.13422	PF 3	21.00	997.29	997.90	997.89	998.12	0.014138	3.76	5.59	12.60	0.99
CNS1	71.13422	PF 4	21.50	997.29	997.91	997.90	998.13	0.013633	3.75	5.74	12.63	0.98
CNS1	71.13422	PF 5	22.00	997.29	997.92	997.91	998.14	0.013181	3.74	5.88	12.66	0.97
CNS1	71.13422	PF 6	22.50	997.29	997.93	997.92	998.15	0.012733	3.73	6.03	12.69	0.95
CNS1	71.13422	PF 7	23.00	997.29	997.94	997.92	998.16	0.012326	3.72	6.18	12.72	0.94
CNS1	71.13422	PF 8	23.50	997.29	997.96	997.93	998.17	0.011941	3.72	6.33	12.75	0.93
CNS1	71.13422	PF 9	24.00	997.29	997.97	997.94	998.18	0.011567	3.71	6.47	12.78	0.92
CNS1	71.13422	PF 10	24.50	997.29	997.98	997.94	998.19	0.011226	3.70	6.62	12.81	0.91
CNS1	71.13422	PF 11	25.00	997.29	997.99	997.95	998.20	0.010878	3.69	6.78	12.84	0.90
CNS1	71.13422	PF 12	25.50	997.29	998.00	997.96	998.21	0.010570	3.68	6.92	12.87	0.88
CNS1	71.13422	PF 13	26.00	997.29	998.01	997.96	998.22	0.010274	3.68	7.07	12.90	0.87
CNS1	71.13422	PF 14	26.50	997.29	998.03	997.97	998.24	0.009995	3.67	7.22	12.93	0.87
CNS1	71.13422	PF 15	27.00	997.29	998.04		998.25	0.009736	3.66	7.37	12.96	0.86
CNS1	71.13422	PF 16	27.50	997.29	998.05		998.26	0.009488	3.66	7.52	12.99	0.85
CNS1	71.13422	PF 17	28.00	997.29	998.06		998.27	0.009251	3.65	7.67	13.02	0.84
CNS1	71.13422	PF 18	28.50	997.29	998.07		998.28	0.009026	3.65	7.81	13.05	0.83
CNS1	71.13422	PF 19	29.00	997.29	998.08		998.29	0.008814	3.64	7.96	13.08	0.82
CNS1	71.13422	PF 20	29.50	997.29	998.09		998.30	0.008610	3.64	8.11	13.11	0.82
CNS1	71.13422	PF 21	30.00	997.29	998.11		998.31	0.008417	3.63	8.26	13.14	0.81
CNS1	71.13422	PF 22	30.50	997.29	998.12		998.32	0.008235	3.63	8.40	13.17	0.80
CNS1	71.13422	PF 23	31.00	997.29	998.13		998.33	0.008058	3.63	8.55	13.20	0.79
CNS1	71.13422	PF 24	31.50	997.29	998.14		998.34	0.007890	3.62	8.70	13.23	0.79
CNS1	71.13422	PF 25	32.00	997.29	998.15		998.35	0.007732	3.62	8.84	13.25	0.78
CNS1	71.13422	PF 26	32.50	997.29	998.16		998.36	0.007582	3.62	8.99	13.28	0.77
CNS1	71.13422	PF 27	33.00	997.29	998.17		998.37	0.007432	3.61	9.13	13.31	0.77
CNS1	71.13422	PF 28	33.50	997.29	998.18		998.39	0.007296	3.61	9.28	13.34	0.76
CNS1	71.13422	PF 29	34.00	997.29	998.19		998.40	0.007160	3.61	9.42	13.37	0.76
CNS1	71.13422	PF 30	34.50	997.29	998.20		998.41	0.007031	3.61	9.57	13.40	0.75
CNS1	71.13422	PF 31	35.00	997.29	998.22		998.42	0.006909	3.60	9.71	13.43	0.75
CNS1	71.13422	PF 32	35.50	997.29	998.23		998.43	0.006802	3.60	9.85	13.45	0.74
CNS1	71.13422	PF 33	36.00	997.29	998.24		998.44	0.006686	3.60	10.00	13.48	0.74
CNS1	71.13422	PF 34	36.50	997.29	998.25		998.45	0.006577	3.60	10.14	13.51	0.73
CNS1	71.13422	PF 35	37.00	997.29	998.26		998.46	0.006472	3.60	10.28	13.54	0.73
CNS1	71.13422	PF 36	37.50	997.29	998.27		998.47	0.006370	3.60	10.43	13.56	0.72
CNS1	71.13422	PF 37	38.00	997.29	998.28		998.48	0.006276	3.60	10.57	13.59	0.72
CNS1	71.13422	PF 38	38.50	997.29	998.29		998.49	0.006183	3.60	10.71	13.62	0.71

HEC-RAS Plan: Plan 01 River: Carnes Reach: CNS1 (Continued)

Reach	River Sta	Profile	Q Total	Min Ch El	W.S. Elev	Crit W.S.	E.G. Elev	E.G. Slope	Vel Chnl	Flow Area	Top Width	Froude # Chl
			(cfs)	(ft)	(ft)	(ft)	(ft)	(ft/ft)	(ft/s)	(sq ft)	(ft)	
CNS1	71.13422	PF 39	39.00	997.29	998.30		998.50	0.006092	3.59	10.85	13.65	0.71
CNS1	71.13422	PF 40	39.50	997.29	998.31		998.51	0.006004	3.59	10.99	13.67	0.71
CNS1	71.13422	PF 41	40.00	997.29	998.32		998.52	0.005921	3.59	11.13	13.70	0.70
CNS1	71.13422	PF 42	40.50	997.29	998.33		998.53	0.005842	3.59	11.27	13.73	0.70
CNS1	71.13422	PF 43	41.00	997.29	998.34		998.54	0.005762	3.59	11.41	13.75	0.70
CNS1	71.13422	PF 44	41.50	997.29	998.35		998.55	0.005686	3.59	11.55	13.78	0.69
CNS1	71.13422	PF 45	42.00	997.29	998.36		998.56	0.005613	3.59	11.69	13.81	0.69
CNS1	71.13422	PF 46	42.50	997.29	998.37		998.57	0.005542	3.59	11.83	13.83	0.68
CNS1	71.13422	PF 47	43.00	997.29	998.38		998.58	0.005475	3.59	11.97	13.86	0.68
CNS1	71.13422	PF 48	43.50	997.29	998.39		998.59	0.005412	3.59	12.11	13.88	0.68
CNS1	71.13422	PF 49	44.00	997.29	998.40		998.60	0.005346	3.59	12.24	13.91	0.67
CNS1	71.13422	PF 50	44.50	997.29	998.41		998.61	0.005283	3.59	12.38	13.94	0.67
CNS1	71.13422	PF 51	45.00	997.29	998.42		998.62	0.005225	3.59	12.52	13.96	0.67
CNS1	71.13422	PF 52	45.50	997.29	998.43		998.63	0.005167	3.60	12.66	13.99	0.67
CNS1	71.13422	PF 53	46.00	997.29	998.44		998.64	0.005111	3.60	12.79	14.01	0.66
CNS1	71.13422	PF 54	46.50	997.29	998.45		998.65	0.005057	3.60	12.93	14.04	0.66
CNS1	71.13422	PF 55	47.00	997.29	998.46		998.66	0.005002	3.60	13.07	14.06	0.66
CNS1	71.13422	PF 56	47.50	997.29	998.47		998.67	0.004950	3.60	13.20	14.09	0.66
CNS1	71.13422	PF 57	48.00	997.29	998.48		998.68	0.004902	3.60	13.34	14.11	0.65
CNS1	71.13422	PF 58	48.50	997.29	998.49		998.69	0.004853	3.60	13.47	14.14	0.65
CNS1	71.13422	PF 59	49.00	997.29	998.50		998.70	0.004805	3.60	13.61	14.16	0.65
CNS1	71.13422	PF 60	49.50	997.29	998.51		998.71	0.004760	3.60	13.74	14.19	0.65
CNS1	71.13422	PF 61	50.00	997.29	998.52		998.72	0.004715	3.60	13.87	14.21	0.64
CNS1	71.13422	PF 62	50.50	997.29	998.53		998.73	0.004673	3.61	14.01	14.24	0.64
CNS1	71.13422	PF 63	51.00	997.29	998.54		998.74	0.004629	3.61	14.14	14.26	0.64
CNS1	71.13422	PF 64	51.50	997.29	998.54		998.75	0.004589	3.61	14.27	14.29	0.64
CNS1	71.13422	PF 65	52.00	997.29	998.55		998.76	0.004548	3.61	14.41	14.31	0.63
CNS1	71.13422	PF 66	52.50	997.29	998.56		998.77	0.004510	3.61	14.54	14.34	0.63
CNS1	71.13422	PF 67	53.00	997.29	998.57		998.77	0.004472	3.61	14.67	14.36	0.63
CNS1	71.13422	PF 68	53.50	997.29	998.58		998.78	0.004434	3.61	14.80	14.38	0.63
CNS1	71.13422	PF 69	54.00	997.29	998.59		998.79	0.004398	3.62	14.93	14.41	0.63
CNS1	71.13422	PF 70	54.50	997.29	998.60		998.80	0.004363	3.62	15.07	14.43	0.62
CNS1	71.13422	PF 71	55.00	997.29	998.61		998.81	0.004328	3.62	15.20	14.46	0.62
CNS1	71.13422	PF 72	55.50	997.29	998.62		998.82	0.004294	3.62	15.33	14.48	0.62
CNS1	71.13422	PF 73	56.00	997.29	998.63		998.83	0.004262	3.62	15.46	14.50	0.62
CNS1	71.13422	PF 74	56.50	997.29	998.64		998.84	0.004229	3.62	15.59	14.53	0.62
CNS1	71.13422	PF 75	57.00	997.29	998.64		998.85	0.004198	3.63	15.72	14.55	0.61
CNS1	71.13422	PF 76	57.50	997.29	998.65		998.86	0.004166	3.63	15.85	14.57	0.61

HEC-RAS Plan: Plan 01 River: Carnes Reach: CNS1 (Continued)

Reach	River Sta	Profile	Q Total	Min Ch El	W.S. Elev	Crit W.S.	E.G. Elev	E.G. Slope	Vel Chnl	Flow Area	Top Width	Froude # Chl
			(cfs)	(ft)	(ft)	(ft)	(ft)	(ft/ft)	(ft/s)	(sq ft)	(ft)	
CNS1	71.13422	PF 77	58.00	997.29	998.66		998.87	0.004138	3.63	15.98	14.60	0.61
CNS1	71.13422	PF 78	58.50	997.29	998.67		998.88	0.004108	3.63	16.11	14.62	0.61
CNS1	71.13422	PF 79	59.00	997.29	998.68		998.89	0.004079	3.63	16.24	14.64	0.61
CNS1	71.13422	PF 80	59.50	997.29	998.69		998.89	0.004051	3.64	16.36	14.67	0.61
CNS1	71.13422	PF 81	60.00	997.29	998.70		998.90	0.004024	3.64	16.49	14.69	0.61
CNS1	71.13422	PF 82	60.50	997.29	998.71		998.91	0.004005	3.64	16.61	14.71	0.60
CNS1	71.13422	PF 83	61.00	997.29	998.71		998.92	0.003978	3.64	16.74	14.73	0.60
CNS1	71.13422	PF 84	61.50	997.29	998.72		998.93	0.003952	3.65	16.87	14.76	0.60
CNS1	71.13422	PF 85	62.00	997.29	998.73		998.94	0.003928	3.65	16.99	14.78	0.60
CNS1	71.13422	PF 86	62.50	997.29	998.74		998.95	0.003903	3.65	17.12	14.80	0.60
CNS1	71.13422	PF 87	63.00	997.29	998.75		998.96	0.003878	3.65	17.25	14.82	0.60
CNS1	71.13422	PF 88	63.50	997.29	998.76		998.96	0.003855	3.66	17.37	14.84	0.60
CNS1	71.13422	PF 89	64.00	997.29	998.77		998.97	0.003831	3.66	17.50	14.87	0.59
CNS1	71.13422	PF 90	64.50	997.29	998.77		998.98	0.003808	3.66	17.63	14.89	0.59
CNS1	71.13422	PF 91	65.00	997.29	998.78		998.99	0.003785	3.66	17.75	14.91	0.59
CNS1	71.13422	PF 92	65.50	997.29	998.79		999.00	0.003763	3.66	17.88	14.93	0.59
CNS1	71.13422	PF 93	66.00	997.29	998.80		999.01	0.003742	3.67	18.00	14.96	0.59
CNS1	71.13422	PF 94	66.50	997.29	998.81		999.02	0.003721	3.67	18.13	14.98	0.59
CNS1	71.13422	PF 95	67.00	997.29	998.82		999.03	0.003701	3.67	18.25	15.00	0.59
CNS1	71.13422	PF 96	67.50	997.29	998.82		999.03	0.003679	3.67	18.38	15.02	0.59
CNS1	71.13422	PF 97	68.00	997.29	998.83		999.04	0.003660	3.68	18.50	15.04	0.58
CNS1	71.13422	PF 98	68.50	997.29	998.84		999.05	0.003640	3.68	18.63	15.06	0.58
CNS1	71.13422	PF 99	69.00	997.29	998.85		999.06	0.003622	3.68	18.75	15.09	0.58
CNS1	71.13422	PF 100	69.50	997.29	998.86		999.07	0.003602	3.68	18.88	15.11	0.58
CNS1	71.13422	PF 101	70.00	997.29	998.87		999.08	0.003584	3.68	19.00	15.13	0.58
CNS1	71.13422	PF 102	70.50	997.29	998.87		999.08	0.003566	3.69	19.12	15.15	0.58
CNS1	71.13422	PF 103	71.00	997.29	998.88		999.09	0.003548	3.69	19.24	15.17	0.58
CNS1	71.13422	PF 104	71.50	997.29	998.89		999.10	0.003531	3.69	19.37	15.19	0.58
CNS1	71.13422	PF 105	72.00	997.29	998.90		999.11	0.003514	3.69	19.49	15.21	0.58
CNS1	71.13422	PF 106	72.50	997.29	998.91		999.12	0.003497	3.70	19.61	15.23	0.57
CNS1	71.13422	PF 107	73.00	997.29	998.91		999.13	0.003481	3.70	19.73	15.26	0.57
CNS1	71.13422	PF 108	73.50	997.29	998.92		999.13	0.003466	3.70	19.85	15.28	0.57
CNS1	71.13422	PF 109	74.00	997.29	998.93		999.14	0.003449	3.70	19.98	15.30	0.57
CNS1	71.13422	PF 110	74.50	997.29	998.94		999.15	0.003434	3.71	20.10	15.32	0.57
CNS1	71.13422	PF 111	75.00	997.29	998.95		999.16	0.003418	3.71	20.22	15.34	0.57
CNS1	71.13422	PF 112	75.50	997.29	998.95		999.17	0.003403	3.71	20.34	15.36	0.57
CNS1	71.13422	PF 113	76.00	997.29	998.96		999.18	0.003388	3.71	20.46	15.38	0.57
CNS1	71.13422	PF 114	76.50	997.29	998.97		999.18	0.003374	3.72	20.58	15.40	0.57

HEC-RAS Plan: Plan 01 River: Carnes Reach: CNS1 (Continued)

Reach	River Sta	Profile	Q Total	Min Ch El	W.S. Elev	Crit W.S.	E.G. Elev	E.G. Slope	Vel Chnl	Flow Area	Top Width	Froude # Chl
			(cfs)	(ft)	(ft)	(ft)	(ft)	(ft/ft)	(ft/s)	(sq ft)	(ft)	
CNS1	71.13422	PF 115	77.00	997.29	998.98		999.19	0.003360	3.72	20.70	15.42	0.57
CNS1	71.13422	PF 116	77.50	997.29	998.98		999.20	0.003345	3.72	20.82	15.44	0.56
CNS1	71.13422	PF 117	78.00	997.29	998.99		999.21	0.003331	3.73	20.94	15.46	0.56
CNS1	71.13422	PF 118	78.50	997.29	999.00		999.22	0.003317	3.73	21.06	15.48	0.56
CNS1	71.13422	PF 119	79.00	997.29	999.01		999.22	0.003304	3.73	21.18	15.50	0.56
CNS1	71.13422	PF 120	79.50	997.29	999.02		999.23	0.003291	3.73	21.30	15.52	0.56
CNS1	71.13422	PF 121	80.00	997.29	999.02		999.24	0.003278	3.74	21.42	15.54	0.56
CNS1	71.13422	PF 122	80.50	997.29	999.03		999.25	0.003266	3.74	21.53	15.56	0.56
CNS1	71.13422	PF 123	81.00	997.29	999.04		999.26	0.003258	3.74	21.64	15.58	0.56
CNS1	71.13422	PF 124	81.50	997.29	999.05		999.26	0.003237	3.74	21.78	15.60	0.56
CNS1	71.13422	PF 125	82.00	997.29	999.05		999.27	0.003230	3.75	21.89	15.62	0.56
CNS1	71.13422	PF 126	82.50	997.29	999.06		999.28	0.003221	3.75	21.99	15.64	0.56
CNS1	71.13422	PF 127	83.00	997.29	999.07		999.29	0.003205	3.75	22.12	15.66	0.56
CNS1	71.13422	PF 128	83.50	997.29	999.08		999.29	0.003195	3.75	22.24	15.68	0.56
CNS1	71.13422	PF 129	84.00	997.29	999.08		999.30	0.003183	3.76	22.35	15.70	0.55
CNS1	71.13422	PF 130	84.50	997.29	999.09		999.31	0.003173	3.76	22.47	15.72	0.55
CNS1	71.13422	PF 131	85.00	997.29	999.10		999.32	0.003162	3.76	22.58	15.74	0.55
CNS1	71.13422	PF 132	85.50	997.29	999.11		999.33	0.003152	3.77	22.70	15.75	0.55
CNS1	71.13422	PF 133	86.00	997.29	999.11		999.33	0.003140	3.77	22.82	15.77	0.55
CNS1	71.13422	PF 134	86.50	997.29	999.12		999.34	0.003128	3.77	22.94	15.79	0.55
CNS1	71.13422	PF 135	87.00	997.29	999.13		999.35	0.003117	3.77	23.06	15.81	0.55
CNS1	71.13422	PF 136	87.50	997.29	999.14		999.36	0.003106	3.78	23.17	15.83	0.55
CNS1	71.13422	PF 137	88.00	997.29	999.14		999.36	0.003095	3.78	23.29	15.85	0.55
CNS1	71.13422	PF 138	88.50	997.29	999.15		999.37	0.003085	3.78	23.41	15.87	0.55
CNS1	71.13422	PF 139	89.00	997.29	999.16		999.38	0.003076	3.78	23.52	15.89	0.55
CNS1	71.13422	PF 140	89.50	997.29	999.16		999.39	0.003066	3.79	23.64	15.91	0.55
CNS1	71.13422	PF 141	90.00	997.29	999.17		999.39	0.003056	3.79	23.75	15.93	0.55
CNS1	71.13422	PF 142	90.50	997.29	999.18		999.40	0.003046	3.79	23.87	15.95	0.55
CNS1	71.13422	PF 143	91.00	997.29	999.19		999.41	0.003037	3.80	23.98	15.96	0.55
CNS1	71.13422	PF 144	91.50	997.29	999.19		999.42	0.003028	3.80	24.09	15.98	0.55
CNS1	71.13422	PF 145	92.00	997.29	999.20		999.42	0.003019	3.80	24.21	16.00	0.54
CNS1	71.13422	PF 146	92.50	997.29	999.21		999.43	0.003010	3.80	24.32	16.02	0.54
CNS1	71.13422	PF 147	93.00	997.29	999.21		999.44	0.003000	3.81	24.44	16.04	0.54
CNS1	71.13422	PF 148	93.50	997.29	999.22		999.45	0.002993	3.81	24.55	16.06	0.54
CNS1	71.13422	PF 149	94.00	997.29	999.23		999.45	0.002983	3.81	24.66	16.08	0.54
CNS1	71.13422	PF 150	94.50	997.29	999.24		999.46	0.002975	3.81	24.78	16.09	0.54

HEC-RAS Plan: Plan 02 River: Carnes Reach: CNS2

Reach	River Sta	Profile	Q Total	Min Ch El	W.S. Elev	Crit W.S.	E.G. Elev	E.G. Slope	Vel Chnl	Flow Area	Top Width	Froude # Chl
			(cfs)	(ft)	(ft)	(ft)	(ft)	(ft/ft)	(ft/s)	(sq ft)	(ft)	
CNS2	69.9567	PF 1	20.00	996.65	997.98		998.01	0.000614	1.35	14.80	14.23	0.23
CNS2	69.9567	PF 2	20.50	996.65	998.00		998.03	0.000619	1.37	15.00	14.26	0.23
CNS2	69.9567	PF 3	21.00	996.65	998.01		998.04	0.000624	1.38	15.19	14.29	0.24
CNS2	69.9567	PF 4	21.50	996.65	998.03		998.06	0.000629	1.40	15.39	14.32	0.24
CNS2	69.9567	PF 5	22.00	996.65	998.04		998.07	0.000634	1.41	15.58	14.35	0.24
CNS2	69.9567	PF 6	22.50	996.65	998.05		998.08	0.000639	1.43	15.78	14.38	0.24
CNS2	69.9567	PF 7	23.00	996.65	998.07		998.10	0.000644	1.44	15.97	14.41	0.24
CNS2	69.9567	PF 8	23.50	996.65	998.08		998.11	0.000648	1.45	16.16	14.43	0.24
CNS2	69.9567	PF 9	24.00	996.65	998.09		998.12	0.000653	1.47	16.34	14.46	0.24
CNS2	69.9567	PF 10	24.50	996.65	998.10		998.14	0.000657	1.48	16.53	14.49	0.24
CNS2	69.9567	PF 11	25.00	996.65	998.12		998.15	0.000661	1.50	16.72	14.52	0.25
CNS2	69.9567	PF 12	25.50	996.65	998.13		998.17	0.000665	1.51	16.90	14.55	0.25
CNS2	69.9567	PF 13	26.00	996.65	998.14		998.18	0.000670	1.52	17.08	14.57	0.25
CNS2	69.9567	PF 14	26.50	996.65	998.15		998.19	0.000674	1.53	17.26	14.60	0.25
CNS2	69.9567	PF 15	27.00	996.65	998.17		998.20	0.000678	1.55	17.44	14.63	0.25
CNS2	69.9567	PF 16	27.50	996.65	998.18		998.22	0.000682	1.56	17.63	14.65	0.25
CNS2	69.9567	PF 17	28.00	996.65	998.19		998.23	0.000685	1.57	17.81	14.68	0.25
CNS2	69.9567	PF 18	28.50	996.65	998.20		998.24	0.000689	1.58	17.98	14.71	0.25
CNS2	69.9567	PF 19	29.00	996.65	998.22		998.26	0.000692	1.60	18.16	14.73	0.25
CNS2	69.9567	PF 20	29.50	996.65	998.23		998.27	0.000696	1.61	18.34	14.76	0.25
CNS2	69.9567	PF 21	30.00	996.65	998.24		998.28	0.000699	1.62	18.51	14.78	0.26
CNS2	69.9567	PF 22	30.50	996.65	998.25		998.29	0.000703	1.63	18.69	14.81	0.26
CNS2	69.9567	PF 23	31.00	996.65	998.26		998.31	0.000706	1.64	18.86	14.83	0.26
CNS2	69.9567	PF 24	31.50	996.65	998.27		998.32	0.000709	1.66	19.03	14.86	0.26
CNS2	69.9567	PF 25	32.00	996.65	998.29		998.33	0.000712	1.67	19.20	14.88	0.26
CNS2	69.9567	PF 26	32.50	996.65	998.30		998.34	0.000715	1.68	19.37	14.91	0.26
CNS2	69.9567	PF 27	33.00	996.65	998.31		998.35	0.000719	1.69	19.54	14.93	0.26
CNS2	69.9567	PF 28	33.50	996.65	998.32		998.37	0.000722	1.70	19.71	14.96	0.26
CNS2	69.9567	PF 29	34.00	996.65	998.33		998.38	0.000724	1.71	19.88	14.98	0.26
CNS2	69.9567	PF 30	34.50	996.65	998.34		998.39	0.000728	1.72	20.04	15.00	0.26
CNS2	69.9567	PF 31	35.00	996.65	998.35		998.40	0.000731	1.73	20.21	15.03	0.26
CNS2	69.9567	PF 32	35.50	996.65	998.36		998.41	0.000734	1.74	20.37	15.05	0.26
CNS2	69.9567	PF 33	36.00	996.65	998.38		998.42	0.000737	1.75	20.54	15.08	0.26
CNS2	69.9567	PF 34	36.50	996.65	998.39		998.43	0.000740	1.76	20.70	15.10	0.27
CNS2	69.9567	PF 35	37.00	996.65	998.40		998.45	0.000743	1.77	20.86	15.12	0.27
CNS2	69.9567	PF 36	37.50	996.65	998.41		998.46	0.000745	1.78	21.02	15.14	0.27
CNS2	69.9567	PF 37	38.00	996.65	998.42		998.47	0.000748	1.79	21.18	15.17	0.27
CNS2	69.9567	PF 38	38.50	996.65	998.43		998.48	0.000750	1.80	21.35	15.19	0.27

HEC-RAS Plan: Plan 02 River: Carnes Reach: CNS2 (Continued)

Reach	River Sta	Profile	Q Total	Min Ch El	W.S. Elev	Crit W.S.	E.G. Elev	E.G. Slope	Vel Chnl	Flow Area	Top Width	Froude # Chl
			(cfs)	(ft)	(ft)	(ft)	(ft)	(ft/ft)	(ft/s)	(sq ft)	(ft)	
CNS2	69.9567	PF 39	39.00	996.65	998.44		998.49	0.000753	1.81	21.51	15.21	0.27
CNS2	69.9567	PF 40	39.50	996.65	998.45		998.50	0.000755	1.82	21.67	15.24	0.27
CNS2	69.9567	PF 41	40.00	996.65	998.46		998.51	0.000758	1.83	21.83	15.26	0.27
CNS2	69.9567	PF 42	40.50	996.65	998.47		998.52	0.000760	1.84	21.98	15.28	0.27
CNS2	69.9567	PF 43	41.00	996.65	998.48		998.53	0.000763	1.85	22.14	15.30	0.27
CNS2	69.9567	PF 44	41.50	996.65	998.49		998.55	0.000765	1.86	22.30	15.33	0.27
CNS2	69.9567	PF 45	42.00	996.65	998.50		998.56	0.000768	1.87	22.45	15.35	0.27
CNS2	69.9567	PF 46	42.50	996.65	998.51		998.57	0.000770	1.88	22.61	15.37	0.27
CNS2	69.9567	PF 47	43.00	996.65	998.52		998.58	0.000772	1.89	22.77	15.39	0.27
CNS2	69.9567	PF 48	43.50	996.65	998.53		998.59	0.000774	1.90	22.92	15.41	0.27
CNS2	69.9567	PF 49	44.00	996.65	998.54		998.60	0.000777	1.91	23.07	15.43	0.27
CNS2	69.9567	PF 50	44.50	996.65	998.55		998.61	0.000779	1.92	23.22	15.46	0.28
CNS2	69.9567	PF 51	45.00	996.65	998.56		998.62	0.000781	1.92	23.38	15.48	0.28
CNS2	69.9567	PF 52	45.50	996.65	998.57		998.63	0.000783	1.93	23.53	15.50	0.28
CNS2	69.9567	PF 53	46.00	996.65	998.58		998.64	0.000786	1.94	23.68	15.52	0.28
CNS2	69.9567	PF 54	46.50	996.65	998.59		998.65	0.000788	1.95	23.83	15.54	0.28
CNS2	69.9567	PF 55	47.00	996.65	998.60		998.66	0.000790	1.96	23.98	15.56	0.28
CNS2	69.9567	PF 56	47.50	996.65	998.61		998.67	0.000792	1.97	24.13	15.58	0.28
CNS2	69.9567	PF 57	48.00	996.65	998.62		998.68	0.000794	1.98	24.28	15.60	0.28
CNS2	69.9567	PF 58	48.50	996.65	998.63		998.69	0.000796	1.99	24.43	15.62	0.28
CNS2	69.9567	PF 59	49.00	996.65	998.64		998.70	0.000798	1.99	24.58	15.64	0.28
CNS2	69.9567	PF 60	49.50	996.65	998.65		998.71	0.000800	2.00	24.73	15.66	0.28
CNS2	69.9567	PF 61	50.00	996.65	998.66		998.72	0.000802	2.01	24.87	15.68	0.28
CNS2	69.9567	PF 62	50.50	996.65	998.67		998.73	0.000804	2.02	25.02	15.70	0.28
CNS2	69.9567	PF 63	51.00	996.65	998.68		998.74	0.000806	2.03	25.17	15.72	0.28
CNS2	69.9567	PF 64	51.50	996.65	998.69		998.75	0.000808	2.03	25.31	15.74	0.28
CNS2	69.9567	PF 65	52.00	996.65	998.70		998.76	0.000809	2.04	25.47	15.77	0.28
CNS2	69.9567	PF 66	52.50	996.65	998.70		998.77	0.000812	2.05	25.60	15.78	0.28
CNS2	69.9567	PF 67	53.00	996.65	998.71		998.78	0.000813	2.06	25.75	15.80	0.28
CNS2	69.9567	PF 68	53.50	996.65	998.72		998.79	0.000816	2.07	25.89	15.82	0.28
CNS2	69.9567	PF 69	54.00	996.65	998.73		998.80	0.000817	2.07	26.04	15.84	0.29
CNS2	69.9567	PF 70	54.50	996.65	998.74		998.81	0.000819	2.08	26.18	15.86	0.29
CNS2	69.9567	PF 71	55.00	996.65	998.75		998.82	0.000820	2.09	26.33	15.88	0.29
CNS2	69.9567	PF 72	55.50	996.65	998.76		998.83	0.000822	2.10	26.47	15.90	0.29
CNS2	69.9567	PF 73	56.00	996.65	998.77		998.84	0.000824	2.10	26.61	15.92	0.29
CNS2	69.9567	PF 74	56.50	996.65	998.78		998.85	0.000825	2.11	26.76	15.94	0.29
CNS2	69.9567	PF 75	57.00	996.65	998.79		998.85	0.000827	2.12	26.90	15.96	0.29
CNS2	69.9567	PF 76	57.50	996.65	998.79		998.86	0.000829	2.13	27.04	15.98	0.29

HEC-RAS Plan: Plan 02 River: Carnes Reach: CNS2 (Continued)

Reach	River Sta	Profile	Q Total	Min Ch El	W.S. Elev	Crit W.S.	E.G. Elev	E.G. Slope	Vel Chnl	Flow Area	Top Width	Froude # Chl
			(cfs)	(ft)	(ft)	(ft)	(ft)	(ft/ft)	(ft/s)	(sq ft)	(ft)	
CNS2	69.9567	PF 77	58.00	996.65	998.80		998.87	0.000831	2.13	27.18	16.00	0.29
CNS2	69.9567	PF 78	58.50	996.65	998.81		998.88	0.000832	2.14	27.32	16.02	0.29
CNS2	69.9567	PF 79	59.00	996.65	998.82		998.89	0.000834	2.15	27.46	16.04	0.29
CNS2	69.9567	PF 80	59.50	996.65	998.83		998.90	0.000835	2.16	27.60	16.05	0.29
CNS2	69.9567	PF 81	60.00	996.65	998.84		998.91	0.000837	2.16	27.74	16.07	0.29
CNS2	69.9567	PF 82	60.50	996.65	998.85		998.92	0.000838	2.17	27.88	16.09	0.29
CNS2	69.9567	PF 83	61.00	996.65	998.86		998.93	0.000840	2.18	28.02	16.11	0.29
CNS2	69.9567	PF 84	61.50	996.65	998.86		998.94	0.000842	2.18	28.16	16.13	0.29
CNS2	69.9567	PF 85	62.00	996.65	998.87		998.95	0.000843	2.19	28.29	16.15	0.29
CNS2	69.9567	PF 86	62.50	996.65	998.88		998.96	0.000845	2.20	28.43	16.17	0.29
CNS2	69.9567	PF 87	63.00	996.65	998.89		998.96	0.000846	2.21	28.57	16.18	0.29
CNS2	69.9567	PF 88	63.50	996.65	998.90		998.97	0.000848	2.21	28.70	16.20	0.29
CNS2	69.9567	PF 89	64.00	996.65	998.91		998.98	0.000849	2.22	28.84	16.22	0.29
CNS2	69.9567	PF 90	64.50	996.65	998.91		998.99	0.000851	2.23	28.98	16.24	0.29
CNS2	69.9567	PF 91	65.00	996.65	998.92		999.00	0.000852	2.23	29.11	16.26	0.29
CNS2	69.9567	PF 92	65.50	996.65	998.93		999.01	0.000853	2.24	29.25	16.27	0.29
CNS2	69.9567	PF 93	66.00	996.65	998.94		999.02	0.000855	2.25	29.39	16.29	0.29
CNS2	69.9567	PF 94	66.50	996.65	998.95		999.03	0.000856	2.25	29.52	16.31	0.30
CNS2	69.9567	PF 95	67.00	996.65	998.96		999.04	0.000858	2.26	29.65	16.33	0.30
CNS2	69.9567	PF 96	67.50	996.65	998.96		999.04	0.000859	2.27	29.79	16.35	0.30
CNS2	69.9567	PF 97	68.00	996.65	998.97		999.05	0.000861	2.27	29.92	16.36	0.30
CNS2	69.9567	PF 98	68.50	996.65	998.98		999.06	0.000862	2.28	30.06	16.38	0.30
CNS2	69.9567	PF 99	69.00	996.65	998.99		999.07	0.000863	2.29	30.19	16.40	0.30
CNS2	69.9567	PF 100	69.50	996.65	999.00		999.08	0.000865	2.29	30.32	16.42	0.30
CNS2	69.9567	PF 101	19.50	996.65	997.97		998.00	0.000608	1.34	14.60	14.20	0.23
CNS2	69.9567	PF 102	19.00	996.65	997.96		997.98	0.000603	1.32	14.39	14.17	0.23
CNS2	69.9567	PF 103	18.50	996.65	997.94		997.97	0.000597	1.30	14.19	14.14	0.23
CNS2	69.9567	PF 104	18.00	996.65	997.93		997.95	0.000592	1.29	13.98	14.11	0.23
CNS2	69.9567	PF 105	17.50	996.65	997.91		997.94	0.000585	1.27	13.78	14.07	0.23
CNS2	69.9567	PF 106	17.00	996.65	997.90		997.92	0.000579	1.25	13.56	14.04	0.22
CNS2	69.9567	PF 107	16.50	996.65	997.88		997.90	0.000573	1.24	13.35	14.01	0.22
CNS2	69.9567	PF 108	16.00	996.65	997.87		997.89	0.000566	1.22	13.14	13.98	0.22
CNS2	69.9567	PF 109	15.50	996.65	997.85		997.87	0.000559	1.20	12.92	13.94	0.22
CNS2	69.9567	PF 110	15.00	996.65	997.83		997.86	0.000552	1.18	12.70	13.91	0.22
CNS2	69.9567	PF 111	14.50	996.65	997.82		997.84	0.000545	1.16	12.48	13.87	0.22
CNS2	69.9567	PF 112	14.00	996.65	997.80		997.82	0.000538	1.14	12.25	13.84	0.21
CNS2	69.9567	PF 113	13.50	996.65	997.79		997.81	0.000530	1.12	12.02	13.80	0.21
CNS2	69.9567	PF 114	13.00	996.65	997.77		997.79	0.000522	1.10	11.79	13.77	0.21

HEC-RAS Plan: Plan 02 River: Carnes Reach: CNS2 (Continued)

Reach	River Sta	Profile	Q Total	Min Ch El	W.S. Elev	Crit W.S.	E.G. Elev	E.G. Slope	Vel Chnl	Flow Area	Top Width	Froude # Chl
			(cfs)	(ft)	(ft)	(ft)	(ft)	(ft/ft)	(ft/s)	(sq ft)	(ft)	
CNS2	69.9567	PF 115	12.50	996.65	997.75		997.77	0.000513	1.08	11.56	13.73	0.21
CNS2	69.9567	PF 116	12.00	996.65	997.73		997.75	0.000505	1.06	11.32	13.69	0.21
CNS2	69.9567	PF 117	11.50	996.65	997.72		997.73	0.000496	1.04	11.08	13.65	0.20
CNS2	69.9567	PF 118	11.00	996.65	997.70		997.71	0.000487	1.02	10.83	13.62	0.20
CNS2	69.9567	PF 119	10.50	996.65	997.68		997.70	0.000477	0.99	10.58	13.58	0.20
CNS2	69.9567	PF 120	10.00	996.65	997.66		997.68	0.000466	0.97	10.33	13.54	0.20

HEC-RAS Plan: Plan 01 River: Carnes Reach: CNS4

Reach	River Sta	Profile	Q Total	Min Ch El	W.S. Elev	Crit W.S.	E.G. Elev	E.G. Slope	Vel Chnl	Flow Area	Top Width	Froude # Chl
			(cfs)	(ft)	(ft)	(ft)	(ft)	(ft/ft)	(ft/s)	(sq ft)	(ft)	
CNS4	72.70597	PF 1	20.00	4182.90	4183.94		4184.07	0.006206	2.87	6.97	12.75	0.68
CNS4	72.70597	PF 2	20.50	4182.90	4183.96		4184.08	0.005949	2.86	7.18	12.79	0.67
CNS4	72.70597	PF 3	21.00	4182.90	4183.97		4184.10	0.005695	2.84	7.39	12.83	0.66
CNS4	72.70597	PF 4	21.50	4182.90	4183.99		4184.11	0.005472	2.83	7.60	12.87	0.65
CNS4	72.70597	PF 5	22.00	4182.90	4184.01		4184.13	0.005264	2.82	7.80	12.91	0.64
CNS4	72.70597	PF 6	22.50	4182.90	4184.02		4184.14	0.005093	2.81	8.00	12.94	0.63
CNS4	72.70597	PF 7	23.00	4182.90	4184.04		4184.16	0.004908	2.80	8.21	12.98	0.62
CNS4	72.70597	PF 8	23.50	4182.90	4184.05		4184.17	0.004768	2.80	8.40	13.01	0.61
CNS4	72.70597	PF 9	24.00	4182.90	4184.07		4184.19	0.004613	2.79	8.60	13.05	0.61
CNS4	72.70597	PF 10	24.50	4182.90	4184.08		4184.20	0.004456	2.78	8.81	13.08	0.60
CNS4	72.70597	PF 11	25.00	4182.90	4184.10		4184.22	0.004328	2.77	9.01	13.12	0.59
CNS4	72.70597	PF 12	25.50	4182.90	4184.11		4184.23	0.004215	2.77	9.20	13.15	0.58
CNS4	72.70597	PF 13	26.00	4182.90	4184.13		4184.25	0.004098	2.76	9.40	13.18	0.58
CNS4	72.70597	PF 14	26.50	4182.90	4184.14		4184.26	0.003996	2.76	9.60	13.21	0.57
CNS4	72.70597	PF 15	27.00	4182.90	4184.16		4184.28	0.003905	2.76	9.78	13.25	0.57
CNS4	72.70597	PF 16	27.50	4182.90	4184.17		4184.29	0.003803	2.75	9.99	13.28	0.56
CNS4	72.70597	PF 17	28.00	4182.90	4184.19		4184.30	0.003720	2.75	10.17	13.31	0.55
CNS4	72.70597	PF 18	28.50	4182.90	4184.20		4184.32	0.003640	2.75	10.36	13.34	0.55
CNS4	72.70597	PF 19	29.00	4182.90	4184.22		4184.33	0.003556	2.75	10.56	13.37	0.54
CNS4	72.70597	PF 20	29.50	4182.90	4184.23		4184.35	0.003482	2.74	10.75	13.41	0.54
CNS4	72.70597	PF 21	30.00	4182.90	4184.24		4184.36	0.003411	2.74	10.94	13.44	0.54
CNS4	72.70597	PF 22	30.50	4182.90	4184.26		4184.37	0.003348	2.74	11.12	13.47	0.53
CNS4	72.70597	PF 23	31.00	4182.90	4184.27		4184.39	0.003287	2.74	11.31	13.50	0.53
CNS4	72.70597	PF 24	31.50	4182.90	4184.29		4184.40	0.003217	2.74	11.50	13.53	0.52
CNS4	72.70597	PF 25	32.00	4182.90	4184.30		4184.42	0.003160	2.74	11.69	13.56	0.52
CNS4	72.70597	PF 26	32.50	4182.90	4184.31		4184.43	0.003110	2.74	11.87	13.59	0.52
CNS4	72.70597	PF 27	33.00	4182.90	4184.33		4184.44	0.003057	2.74	12.05	13.62	0.51
CNS4	72.70597	PF 28	33.50	4182.90	4184.34		4184.46	0.003005	2.74	12.24	13.65	0.51
CNS4	72.70597	PF 29	34.00	4182.90	4184.35		4184.47	0.002959	2.74	12.42	13.68	0.51
CNS4	72.70597	PF 30	34.50	4182.90	4184.37		4184.48	0.002914	2.74	12.60	13.71	0.50
CNS4	72.70597	PF 31	35.00	4182.90	4184.38		4184.50	0.002866	2.74	12.79	13.74	0.50
CNS4	72.70597	PF 32	35.50	4182.90	4184.39		4184.51	0.002824	2.74	12.97	13.77	0.50
CNS4	72.70597	PF 33	36.00	4182.90	4184.41		4184.52	0.002787	2.74	13.14	13.79	0.49
CNS4	72.70597	PF 34	36.50	4182.90	4184.42		4184.54	0.002747	2.74	13.33	13.82	0.49
CNS4	72.70597	PF 35	37.00	4182.90	4184.43		4184.55	0.002711	2.74	13.50	13.85	0.49
CNS4	72.70597	PF 36	37.50	4182.90	4184.44		4184.56	0.002673	2.74	13.69	13.88	0.49
CNS4	72.70597	PF 37	38.00	4182.90	4184.46		4184.57	0.002647	2.74	13.85	13.91	0.48
CNS4	72.70597	PF 38	38.50	4182.90	4184.47		4184.59	0.002610	2.74	14.03	13.94	0.48

HEC-RAS Plan: Plan 01 River: Carnes Reach: CNS4 (Continued)

Reach	River Sta	Profile	Q Total	Min Ch El	W.S. Elev	Crit W.S.	E.G. Elev	E.G. Slope	Vel Chnl	Flow Area	Top Width	Froude # Chl
			(cfs)	(ft)	(ft)	(ft)	(ft)	(ft/ft)	(ft/s)	(sq ft)	(ft)	
CNS4	72.70597	PF 39	39.00	4182.90	4184.48		4184.60	0.002581	2.75	14.20	13.96	0.48
CNS4	72.70597	PF 40	39.50	4182.90	4184.50		4184.61	0.002546	2.75	14.39	13.99	0.48
CNS4	72.70597	PF 41	40.00	4182.90	4184.51		4184.63	0.002515	2.75	14.56	14.02	0.47
CNS4	72.70597	PF 42	40.50	4182.90	4184.52		4184.64	0.002491	2.75	14.73	14.05	0.47
CNS4	72.70597	PF 43	41.00	4182.90	4184.53		4184.65	0.002465	2.75	14.90	14.07	0.47
CNS4	72.70597	PF 44	41.50	4182.90	4184.54		4184.66	0.002432	2.75	15.09	14.10	0.47
CNS4	72.70597	PF 45	42.00	4182.90	4184.56		4184.67	0.002413	2.76	15.24	14.13	0.47
CNS4	72.70597	PF 46	42.50	4182.90	4184.57		4184.69	0.002384	2.76	15.42	14.16	0.47
CNS4	72.70597	PF 47	43.00	4182.90	4184.58		4184.70	0.002359	2.76	15.60	14.18	0.46
CNS4	72.70597	PF 48	43.50	4182.90	4184.59		4184.71	0.002335	2.76	15.77	14.21	0.46
CNS4	72.70597	PF 49	44.00	4182.90	4184.61		4184.72	0.002311	2.76	15.94	14.24	0.46
CNS4	72.70597	PF 50	44.50	4182.90	4184.62		4184.74	0.002287	2.76	16.12	14.26	0.46
CNS4	72.70597	PF 51	45.00	4182.90	4184.63		4184.75	0.002267	2.76	16.28	14.29	0.46
CNS4	72.70597	PF 52	45.50	4182.90	4184.64		4184.76	0.002244	2.76	16.46	14.32	0.45
CNS4	72.70597	PF 53	46.00	4182.90	4184.65		4184.77	0.002227	2.77	16.62	14.34	0.45
CNS4	72.70597	PF 54	46.50	4182.90	4184.66		4184.78	0.002207	2.77	16.79	14.37	0.45
CNS4	72.70597	PF 55	47.00	4182.90	4184.68		4184.80	0.002185	2.77	16.96	14.39	0.45
CNS4	72.70597	PF 56	47.50	4182.90	4184.69		4184.81	0.002171	2.77	17.12	14.42	0.45
CNS4	72.70597	PF 57	48.00	4182.90	4184.70		4184.82	0.002150	2.78	17.30	14.44	0.45
CNS4	72.70597	PF 58	48.50	4182.90	4184.71		4184.83	0.002134	2.78	17.46	14.47	0.45
CNS4	72.70597	PF 59	49.00	4182.90	4184.72		4184.84	0.002115	2.78	17.63	14.50	0.44
CNS4	72.70597	PF 60	49.50	4182.90	4184.73		4184.85	0.002095	2.78	17.80	14.52	0.44
CNS4	72.70597	PF 61	50.00	4182.90	4184.74		4184.87	0.002087	2.79	17.95	14.54	0.44
CNS4	72.70597	PF 62	50.50	4182.90	4184.76		4184.88	0.002071	2.79	18.11	14.57	0.44
CNS4	72.70597	PF 63	51.00	4182.90	4184.77		4184.89	0.002051	2.79	18.29	14.60	0.44
CNS4	72.70597	PF 64	51.50	4182.90	4184.78		4184.90	0.002043	2.79	18.43	14.62	0.44
CNS4	72.70597	PF 65	52.00	4182.90	4184.79		4184.91	0.002026	2.80	18.60	14.64	0.44
CNS4	72.70597	PF 66	52.50	4182.90	4184.80		4184.92	0.002011	2.80	18.77	14.67	0.44
CNS4	72.70597	PF 67	53.00	4182.90	4184.81		4184.93	0.001997	2.80	18.93	14.69	0.43
CNS4	72.70597	PF 68	53.50	4182.90	4184.82		4184.94	0.001984	2.80	19.09	14.72	0.43
CNS4	72.70597	PF 69	54.00	4182.90	4184.83		4184.96	0.001975	2.81	19.24	14.74	0.43
CNS4	72.70597	PF 70	54.50	4182.90	4184.84		4184.97	0.001958	2.81	19.41	14.76	0.43
CNS4	72.70597	PF 71	55.00	4182.90	4184.86		4184.98	0.001944	2.81	19.58	14.79	0.43
CNS4	72.70597	PF 72	55.50	4182.90	4184.87		4184.99	0.001932	2.81	19.74	14.81	0.43
CNS4	72.70597	PF 73	56.00	4182.90	4184.88		4185.00	0.001920	2.81	19.90	14.84	0.43
CNS4	72.70597	PF 74	56.50	4182.90	4184.89		4185.01	0.001911	2.82	20.05	14.86	0.43
CNS4	72.70597	PF 75	57.00	4182.90	4184.90		4185.02	0.001897	2.82	20.22	14.88	0.43
CNS4	72.70597	PF 76	57.50	4182.90	4184.91		4185.03	0.001887	2.82	20.37	14.91	0.43

HEC-RAS Plan: Plan 01 River: Carnes Reach: CNS4 (Continued)

Reach	River Sta	Profile	Q Total	Min Ch El	W.S. Elev	Crit W.S.	E.G. Elev	E.G. Slope	Vel Chnl	Flow Area	Top Width	Froude # Chl
			(cfs)	(ft)	(ft)	(ft)	(ft)	(ft/ft)	(ft/s)	(sq ft)	(ft)	
CNS4	72.70597	PF 77	58.00	4182.90	4184.92		4185.04	0.001874	2.82	20.54	14.93	0.42
CNS4	72.70597	PF 78	58.50	4182.90	4184.93		4185.05	0.001867	2.83	20.68	14.96	0.42
CNS4	72.70597	PF 79	59.00	4182.90	4184.94		4185.07	0.001856	2.83	20.84	14.98	0.42
CNS4	72.70597	PF 80	59.50	4182.90	4184.95		4185.08	0.001846	2.83	21.00	15.01	0.42
CNS4	72.70597	PF 81	60.00	4182.90	4184.96		4185.09	0.001839	2.84	21.14	15.03	0.42
CNS4	72.70597	PF 82	60.50	4182.90	4184.97		4185.10	0.001828	2.84	21.31	15.05	0.42
CNS4	72.70597	PF 83	61.00	4182.90	4184.98		4185.11	0.001815	2.84	21.47	15.08	0.42
CNS4	72.70597	PF 84	61.50	4182.90	4184.99		4185.12	0.001806	2.84	21.63	15.10	0.42
CNS4	72.70597	PF 85	62.00	4182.90	4185.00		4185.13	0.001797	2.85	21.78	15.13	0.42
CNS4	72.70597	PF 86	62.50	4182.90	4185.01		4185.14	0.001790	2.85	21.93	15.15	0.42
CNS4	72.70597	PF 87	63.00	4182.90	4185.02		4185.15	0.001781	2.85	22.09	15.17	0.42
CNS4	72.70597	PF 88	63.50	4182.90	4185.03		4185.16	0.001772	2.85	22.24	15.20	0.42
CNS4	72.70597	PF 89	64.00	4182.90	4185.04		4185.17	0.001764	2.86	22.40	15.22	0.42
CNS4	72.70597	PF 90	64.50	4182.90	4185.05		4185.18	0.001756	2.86	22.55	15.25	0.41
CNS4	72.70597	PF 91	65.00	4182.90	4185.06		4185.19	0.001749	2.86	22.70	15.27	0.41
CNS4	72.70597	PF 92	65.50	4182.90	4185.07		4185.20	0.001741	2.87	22.85	15.29	0.41
CNS4	72.70597	PF 93	66.00	4182.90	4185.08		4185.21	0.001732	2.87	23.01	15.32	0.41
CNS4	72.70597	PF 94	66.50	4182.90	4185.09		4185.22	0.001726	2.87	23.15	15.34	0.41
CNS4	72.70597	PF 95	67.00	4182.90	4185.10		4185.23	0.001718	2.87	23.31	15.36	0.41
CNS4	72.70597	PF 96	67.50	4182.90	4185.11		4185.24	0.001706	2.87	23.48	15.39	0.41
CNS4	72.70597	PF 97	68.00	4182.90	4185.12		4185.25	0.001701	2.88	23.63	15.41	0.41
CNS4	72.70597	PF 98	68.50	4182.90	4185.13		4185.26	0.001694	2.88	23.78	15.43	0.41
CNS4	72.70597	PF 99	69.00	4182.90	4185.14		4185.27	0.001685	2.88	23.93	15.46	0.41
CNS4	72.70597	PF 100	69.50	4182.90	4185.15		4185.28	0.001678	2.89	24.09	15.48	0.41

HEC-RAS Plan: Plan 05 River: Cames Reach: CNS 5

Reach	River Sta	Profile	Q Total	Min Ch El	W.S. Elev	Crit W.S.	E.G. Elev	E.G. Slope	Vel Chnl	Flow Area	Top Width	Culv Vel DS	Culv WS Outlet
			(cfs)	(ft)	(ft)	(ft)	(ft)	(ft/ft)	(ft/s)	(sq ft)	(ft)	(ft/s)	(ft)
CNS 5	70 Culvert #1	PF 1	10.00									3.90	4165.77
CNS 5	70 Culvert #1	PF 2	10.50									4.02	4165.78
CNS 5	70 Culvert #1	PF 3	11.00									4.09	4165.79
CNS 5	70 Culvert #1	PF 4	11.50									4.18	4165.81
CNS 5	70 Culvert #1	PF 5	12.00									4.26	4165.82
CNS 5	70 Culvert #1	PF 6	12.50									4.32	4165.83
CNS 5	70 Culvert #1	PF 7	13.00									4.36	4165.85
CNS 5	70 Culvert #1	PF 8	13.50									4.40	4165.87
CNS 5	70 Culvert #1	PF 9	14.00									4.43	4165.89
CNS 5	70 Culvert #1	PF 10	14.50									4.45	4165.91
CNS 5	70 Culvert #1	PF 11	15.00									4.47	4165.93
CNS 5	70 Culvert #1	PF 12	15.50									4.48	4165.95
CNS 5	70 Culvert #1	PF 13	16.00									4.49	4165.97
CNS 5	70 Culvert #1	PF 14	16.50									4.50	4165.99
CNS 5	70 Culvert #1	PF 15	17.00									4.50	4166.01
CNS 5	70 Culvert #1	PF 16	17.50									4.51	4166.04
CNS 5	70 Culvert #1	PF 17	18.00									4.52	4166.06
CNS 5	70 Culvert #1	PF 18	18.50									4.53	4166.08
CNS 5	70 Culvert #1	PF 19	19.00									4.53	4166.10
CNS 5	70 Culvert #1	PF 20	19.50									4.54	4166.13
CNS 5	70 Culvert #1	PF 21	20.00									4.54	4166.15
CNS 5	70 Culvert #1	PF 22	20.50									4.55	4166.17
CNS 5	70 Culvert #1	PF 23	21.00									4.55	4166.20
CNS 5	70 Culvert #1	PF 24	21.50									4.56	4166.22
CNS 5	70 Culvert #1	PF 25	22.00									4.56	4166.24
CNS 5	70 Culvert #1	PF 26	22.50									4.57	4166.27
CNS 5	70 Culvert #1	PF 27	23.00									4.57	4166.29
CNS 5	70 Culvert #1	PF 28	23.50									4.58	4166.31
CNS 5	70 Culvert #1	PF 29	24.00									4.57	4166.33
CNS 5	70 Culvert #1	PF 30	24.50									4.57	4166.36
CNS 5	70 Culvert #1	PF 31	25.00									4.57	4166.38
CNS 5	70 Culvert #1	PF 32	25.50									4.57	4166.40
CNS 5	70 Culvert #1	PF 33	26.00									4.57	4166.42
CNS 5	70 Culvert #1	PF 34	26.50									4.56	4166.45
CNS 5	70 Culvert #1	PF 35	27.00									4.56	4166.47
CNS 5	70 Culvert #1	PF 36	27.50									4.56	4166.49
CNS 5	70 Culvert #1	PF 37	28.00									4.56	4166.52
CNS 5	70 Culvert #1	PF 38	28.50									4.55	4166.54
CNS 5	70 Culvert #1	PF 39	29.00									4.55	4166.56
CNS 5	70 Culvert #1	PF 40	29.50									4.55	4166.58
CNS 5	70 Culvert #1	PF 41	30.00									4.55	4166.61
CNS 5	70 Culvert #1	PF 42	30.50									4.56	4166.63
CNS 5	70 Culvert #1	PF 43	31.00									4.57	4166.65
CNS 5	70 Culvert #1	PF 44	31.50									4.58	4166.67
CNS 5	70 Culvert #1	PF 45	32.00									4.60	4166.69
CNS 5	70 Culvert #1	PF 46	32.50									4.61	4166.72

HEC-RAS Plan: Plan 05 River: Carnes Reach: CNS 5 (Continued)

Reach	River Sta	Profile	Q Total	Min Ch El	W.S. Elev	Crit W.S.	E.G. Elev	E.G. Slope	Vel Chnl	Flow Area	Top Width	Culv Vel DS	Culv WS Outlet
			(cfs)	(ft)	(ft)	(ft)	(ft)	(ft/ft)	(ft/s)	(sq ft)	(ft)	(ft/s)	(ft)
CNS 5	70 Culvert #1	PF 47	33.00									4.62	4166.74
CNS 5	70 Culvert #1	PF 48	33.50									4.63	4166.76
CNS 5	70 Culvert #1	PF 49	34.00									4.64	4166.78
CNS 5	70 Culvert #1	PF 50	34.50									4.65	4166.80
CNS 5	70 Culvert #1	PF 51	35.00									4.67	4166.82
CNS 5	70 Culvert #1	PF 52	35.50									4.68	4166.84
CNS 5	70 Culvert #1	PF 53	36.00									4.69	4166.86
CNS 5	70 Culvert #1	PF 54	36.50									4.71	4166.88
CNS 5	70 Culvert #1	PF 55	37.00									4.72	4166.91
CNS 5	70 Culvert #1	PF 56	37.50									4.73	4166.93
CNS 5	70 Culvert #1	PF 57	38.00									4.75	4166.95
CNS 5	70 Culvert #1	PF 58	38.50									4.77	4166.97
CNS 5	70 Culvert #1	PF 59	39.00									4.78	4166.99
CNS 5	70 Culvert #1	PF 60	39.50									4.80	4167.01
CNS 5	70 Culvert #1	PF 61	40.00									4.82	4167.03
CNS 5	70 Culvert #1	PF 62	40.50									4.83	4167.04
CNS 5	70 Culvert #1	PF 63	41.00									4.41	4167.29
CNS 5	70 Culvert #1	PF 64	41.50									4.45	4167.31
CNS 5	70 Culvert #1	PF 65	42.00									4.48	4167.32
CNS 5	70 Culvert #1	PF 66	42.50									4.51	4167.34
CNS 5	70 Culvert #1	PF 67	43.00									4.54	4167.35
CNS 5	70 Culvert #1	PF 68	43.50									4.57	4167.36
CNS 5	70 Culvert #1	PF 69	44.00									4.60	4167.38
CNS 5	70 Culvert #1	PF 70	44.50									4.63	4167.39

HEC-RAS Plan: CNS6 River: Carnes Reach: CNS6

Reach	River Sta	Profile	Q Total	Min Ch El	W.S. Elev	Crit W.S.	E.G. Elev	E.G. Slope	Vel Chnl	Flow Area	Top Width	Froude # Chl
			(cfs)	(ft)	(ft)	(ft)	(ft)	(ft/ft)	(ft/s)	(sq ft)	(ft)	
CNS6	62.01086	PF 1	10.00	4144.13	4145.53		4145.54	0.000344	0.90	11.05	12.83	0.17
CNS6	62.01086	PF 2	10.50	4144.13	4145.55		4145.56	0.000355	0.93	11.31	12.91	0.17
CNS6	62.01086	PF 3	11.00	4144.13	4145.57		4145.58	0.000365	0.95	11.56	12.98	0.18
CNS6	62.01086	PF 4	11.50	4144.13	4145.59		4145.60	0.000376	0.97	11.80	13.05	0.18
CNS6	62.01086	PF 5	12.00	4144.13	4145.61		4145.62	0.000385	1.00	12.04	13.13	0.18
CNS6	62.01086	PF 6	12.50	4144.13	4145.62		4145.64	0.000395	1.02	12.28	13.20	0.19
CNS6	62.01086	PF 7	13.00	4144.13	4145.64		4145.66	0.000403	1.04	12.53	13.27	0.19
CNS6	62.01086	PF 8	13.50	4144.13	4145.66		4145.68	0.000413	1.06	12.75	13.33	0.19
CNS6	62.01086	PF 9	14.00	4144.13	4145.68		4145.70	0.000420	1.08	12.99	13.40	0.19
CNS6	62.01086	PF 10	14.50	4144.13	4145.69		4145.71	0.000429	1.10	13.21	13.46	0.20
CNS6	62.01086	PF 11	15.00	4144.13	4145.71		4145.73	0.000436	1.12	13.45	13.53	0.20
CNS6	62.01086	PF 12	15.50	4144.13	4145.73		4145.75	0.000444	1.13	13.66	13.59	0.20
CNS6	62.01086	PF 13	16.00	4144.13	4145.74		4145.77	0.000451	1.15	13.89	13.66	0.20
CNS6	62.01086	PF 14	16.50	4144.13	4145.76		4145.78	0.000460	1.17	14.09	13.71	0.20
CNS6	62.01086	PF 15	17.00	4144.13	4145.78		4145.80	0.000465	1.19	14.33	13.78	0.21
CNS6	62.01086	PF 16	17.50	4144.13	4145.79		4145.81	0.000472	1.20	14.54	13.84	0.21
CNS6	62.01086	PF 17	18.00	4144.13	4145.81		4145.83	0.000480	1.22	14.75	13.90	0.21
CNS6	62.01086	PF 18	18.50	4144.13	4145.82		4145.85	0.000485	1.24	14.96	13.96	0.21
CNS6	62.01086	PF 19	19.00	4144.13	4145.84		4145.86	0.000492	1.25	15.18	14.01	0.21
CNS6	62.01086	PF 20	19.50	4144.13	4145.85		4145.88	0.000498	1.27	15.38	14.07	0.21
CNS6	62.01086	PF 21	20.00	4144.13	4145.87		4145.89	0.000503	1.28	15.60	14.13	0.22
CNS6	62.01086	PF 22	20.50	4144.13	4145.88		4145.91	0.000509	1.30	15.80	14.19	0.22
CNS6	62.01086	PF 23	21.00	4144.13	4145.90		4145.92	0.000516	1.31	16.00	14.24	0.22
CNS6	62.01086	PF 24	21.50	4144.13	4145.91		4145.94	0.000520	1.33	16.21	14.30	0.22
CNS6	62.01086	PF 25	22.00	4144.13	4145.92		4145.95	0.000526	1.34	16.40	14.35	0.22
CNS6	62.01086	PF 26	22.50	4144.13	4145.94		4145.97	0.000532	1.36	16.60	14.40	0.22
CNS6	62.01086	PF 27	23.00	4144.13	4145.95		4145.98	0.000535	1.37	16.82	14.46	0.22
CNS6	62.01086	PF 28	23.50	4144.13	4145.97		4146.00	0.000540	1.38	17.02	14.51	0.22
CNS6	62.01086	PF 29	24.00	4144.13	4145.98		4146.01	0.000545	1.39	17.21	14.56	0.23
CNS6	62.01086	PF 30	24.50	4144.13	4145.99		4146.02	0.000551	1.41	17.40	14.61	0.23
CNS6	62.01086	PF 31	25.00	4144.13	4146.01		4146.04	0.000556	1.42	17.59	14.66	0.23
CNS6	62.01086	PF 32	25.50	4144.13	4146.02		4146.05	0.000559	1.43	17.79	14.72	0.23
CNS6	62.01086	PF 33	26.00	4144.13	4146.03		4146.06	0.000564	1.45	17.98	14.76	0.23
CNS6	62.01086	PF 34	26.50	4144.13	4146.05		4146.08	0.000568	1.46	18.18	14.82	0.23
CNS6	62.01086	PF 35	27.00	4144.13	4146.06		4146.09	0.000572	1.47	18.37	14.87	0.23
CNS6	62.01086	PF 36	27.50	4144.13	4146.07		4146.10	0.000578	1.48	18.55	14.91	0.23
CNS6	62.01086	PF 37	28.00	4144.13	4146.08		4146.12	0.000581	1.49	18.74	14.96	0.24
CNS6	62.01086	PF 38	28.50	4144.13	4146.10		4146.13	0.000585	1.51	18.93	15.01	0.24

HEC-RAS Plan: CNS6 River: Carnes Reach: CNS6 (Continued)

Reach	River Sta	Profile	Q Total	Min Ch El	W.S. Elev	Crit W.S.	E.G. Elev	E.G. Slope	Vel Chnl	Flow Area	Top Width	Froude # Chl
			(cfs)	(ft)	(ft)	(ft)	(ft)	(ft/ft)	(ft/s)	(sq ft)	(ft)	
CNS6	62.01086	PF 39	29.00	4144.13	4146.11		4146.14	0.000588	1.52	19.12	15.06	0.24
CNS6	62.01086	PF 40	29.50	4144.13	4146.12		4146.16	0.000592	1.53	19.31	15.11	0.24
CNS6	62.01086	PF 41	30.00	4144.13	4146.13		4146.17	0.000596	1.54	19.49	15.15	0.24
CNS6	62.01086	PF 42	30.50	4144.13	4146.15		4146.18	0.000600	1.55	19.68	15.20	0.24
CNS6	62.01086	PF 43	31.00	4144.13	4146.16		4146.19	0.000604	1.56	19.85	15.24	0.24
CNS6	62.01086	PF 44	31.50	4144.13	4146.17		4146.21	0.000606	1.57	20.05	15.29	0.24
CNS6	62.01086	PF 45	32.00	4144.13	4146.18		4146.22	0.000610	1.58	20.23	15.34	0.24
CNS6	62.01086	PF 46	32.50	4144.13	4146.19		4146.23	0.000614	1.59	20.41	15.38	0.24
CNS6	62.01086	PF 47	33.00	4144.13	4146.20		4146.24	0.000618	1.60	20.58	15.43	0.24
CNS6	62.01086	PF 48	33.50	4144.13	4146.22		4146.26	0.000621	1.61	20.76	15.47	0.25
CNS6	62.01086	PF 49	34.00	4144.13	4146.23		4146.27	0.000624	1.62	20.94	15.52	0.25
CNS6	62.01086	PF 50	34.50	4144.13	4146.24		4146.28	0.000627	1.63	21.13	15.56	0.25
CNS6	62.01086	PF 51	35.00	4144.13	4146.25		4146.29	0.000630	1.64	21.30	15.61	0.25
CNS6	62.01086	PF 52	35.50	4144.13	4146.26		4146.31	0.000632	1.65	21.49	15.65	0.25
CNS6	62.01086	PF 53	36.00	4144.13	4146.27		4146.32	0.000635	1.66	21.66	15.69	0.25
CNS6	62.01086	PF 54	36.50	4144.13	4146.28		4146.33	0.000639	1.67	21.83	15.74	0.25
CNS6	62.01086	PF 55	37.00	4144.13	4146.30		4146.34	0.000642	1.68	22.01	15.78	0.25
CNS6	62.01086	PF 56	37.50	4144.13	4146.31		4146.35	0.000645	1.69	22.18	15.82	0.25
CNS6	62.01086	PF 57	38.00	4144.13	4146.32		4146.36	0.000647	1.70	22.35	15.86	0.25
CNS6	62.01086	PF 58	38.50	4144.13	4146.33		4146.37	0.000650	1.71	22.53	15.91	0.25
CNS6	62.01086	PF 59	39.00	4144.13	4146.34		4146.39	0.000652	1.72	22.70	15.95	0.25
CNS6	62.01086	PF 60	39.50	4144.13	4146.35		4146.40	0.000655	1.73	22.88	15.99	0.25
CNS6	62.01086	PF 61	40.00	4144.13	4146.36		4146.41	0.000658	1.74	23.05	16.03	0.26
CNS6	62.01086	PF 62	40.50	4144.13	4146.37		4146.42	0.000660	1.74	23.22	16.07	0.26
CNS6	62.01086	PF 63	41.00	4144.13	4146.38		4146.43	0.000663	1.75	23.39	16.11	0.26
CNS6	62.01086	PF 64	41.50	4144.13	4146.39		4146.44	0.000665	1.76	23.56	16.15	0.26
CNS6	62.01086	PF 65	42.00	4144.13	4146.40		4146.45	0.000667	1.77	23.73	16.19	0.26
CNS6	62.01086	PF 66	42.50	4144.13	4146.41		4146.46	0.000669	1.78	23.91	16.24	0.26
CNS6	62.01086	PF 67	43.00	4144.13	4146.42		4146.47	0.000672	1.79	24.07	16.28	0.26
CNS6	62.01086	PF 68	43.50	4144.13	4146.44		4146.49	0.000674	1.79	24.25	16.32	0.26
CNS6	62.01086	PF 69	44.00	4144.13	4146.45		4146.50	0.000676	1.80	24.42	16.36	0.26
CNS6	62.01086	PF 70	44.50	4144.13	4146.46		4146.51	0.000679	1.81	24.58	16.39	0.26
CNS6	62.01086	PF 71	45.00	4144.13	4146.47		4146.52	0.000680	1.82	24.75	16.43	0.26
CNS6	62.01086	PF 72	45.50	4144.13	4146.48		4146.53	0.000682	1.83	24.92	16.47	0.26
CNS6	62.01086	PF 73	46.00	4144.13	4146.49		4146.54	0.000685	1.83	25.08	16.51	0.26
CNS6	62.01086	PF 74	46.50	4144.13	4146.50		4146.55	0.000686	1.84	25.25	16.55	0.26
CNS6	62.01086	PF 75	47.00	4144.13	4146.51		4146.56	0.000688	1.85	25.42	16.59	0.26
CNS6	62.01086	PF 76	47.50	4144.13	4146.52		4146.57	0.000690	1.86	25.58	16.63	0.26

HEC-RAS Plan: CNS6 River: Carnes Reach: CNS6 (Continued)

Reach	River Sta	Profile	Q Total	Min Ch El	W.S. Elev	Crit W.S.	E.G. Elev	E.G. Slope	Vel Chnl	Flow Area	Top Width	Froude # Chl
			(cfs)	(ft)	(ft)	(ft)	(ft)	(ft/ft)	(ft/s)	(sq ft)	(ft)	
CNS6	62.01086	PF 77	48.00	4144.13	4146.53		4146.58	0.000692	1.86	25.75	16.67	0.26
CNS6	62.01086	PF 78	48.50	4144.13	4146.54		4146.59	0.000694	1.87	25.91	16.70	0.26
CNS6	62.01086	PF 79	49.00	4144.13	4146.55		4146.60	0.000696	1.88	26.07	16.74	0.27
CNS6	62.01086	PF 80	49.50	4144.13	4146.56		4146.61	0.000698	1.89	26.24	16.78	0.27
CNS6	62.01086	PF 81	50.00	4144.13	4146.57		4146.62	0.000700	1.89	26.40	16.82	0.27
CNS6	62.01086	PF 82	50.50	4144.13	4146.58		4146.63	0.000702	1.90	26.56	16.85	0.27
CNS6	62.01086	PF 83	51.00	4144.13	4146.58		4146.64	0.000703	1.91	26.73	16.89	0.27
CNS6	62.01086	PF 84	51.50	4144.13	4146.59		4146.65	0.000705	1.92	26.89	16.93	0.27
CNS6	62.01086	PF 85	52.00	4144.13	4146.60		4146.66	0.000707	1.92	27.05	16.96	0.27
CNS6	62.01086	PF 86	52.50	4144.13	4146.61		4146.67	0.000709	1.93	27.21	17.00	0.27
CNS6	62.01086	PF 87	53.00	4144.13	4146.62		4146.68	0.000710	1.94	27.37	17.04	0.27
CNS6	62.01086	PF 88	53.50	4144.13	4146.63		4146.69	0.000711	1.94	27.54	17.08	0.27
CNS6	62.01086	PF 89	54.00	4144.13	4146.64		4146.70	0.000713	1.95	27.70	17.11	0.27
CNS6	62.01086	PF 90	54.50	4144.13	4146.65		4146.71	0.000715	1.96	27.85	17.15	0.27
CNS6	62.01086	PF 91	55.00	4144.13	4146.66		4146.72	0.000717	1.96	28.01	17.18	0.27
CNS6	62.01086	PF 92	55.50	4144.13	4146.67		4146.73	0.000719	1.97	28.17	17.22	0.27
CNS6	62.01086	PF 93	56.00	4144.13	4146.68		4146.74	0.000720	1.98	28.33	17.25	0.27
CNS6	62.01086	PF 94	56.50	4144.13	4146.69		4146.75	0.000721	1.98	28.50	17.29	0.27
CNS6	62.01086	PF 95	57.00	4144.13	4146.70		4146.76	0.000723	1.99	28.65	17.32	0.27
CNS6	62.01086	PF 96	57.50	4144.13	4146.71		4146.77	0.000724	2.00	28.81	17.36	0.27
CNS6	62.01086	PF 97	58.00	4144.13	4146.72		4146.78	0.000725	2.00	28.97	17.39	0.27
CNS6	62.01086	PF 98	58.50	4144.13	4146.72		4146.79	0.000728	2.01	29.12	17.43	0.27
CNS6	62.01086	PF 99	59.00	4144.13	4146.73		4146.80	0.000729	2.02	29.27	17.46	0.27
CNS6	62.01086	PF 100	59.50	4144.13	4146.74		4146.81	0.000730	2.02	29.44	17.50	0.27
CNS6	62.01086	PF 101	60.00	4144.13	4146.75		4146.82	0.000731	2.03	29.59	17.53	0.27
CNS6	62.01086	PF 102	60.50	4144.13	4146.76		4146.82	0.000733	2.03	29.75	17.57	0.28
CNS6	62.01086	PF 103	61.00	4144.13	4146.77		4146.83	0.000734	2.04	29.90	17.60	0.28
CNS6	62.01086	PF 104	61.50	4144.13	4146.78		4146.84	0.000735	2.05	30.06	17.63	0.28
CNS6	62.01086	PF 105	62.00	4144.13	4146.79		4146.85	0.000735	2.05	30.24	17.67	0.28
CNS6	62.01086	PF 106	62.50	4144.13	4146.80		4146.86	0.000737	2.06	30.39	17.70	0.28
CNS6	62.01086	PF 107	63.00	4144.13	4146.80		4146.87	0.000739	2.06	30.52	17.74	0.28
CNS6	62.01086	PF 108	63.50	4144.13	4146.81		4146.88	0.000740	2.07	30.68	17.77	0.28
CNS6	62.01086	PF 109	64.00	4144.13	4146.82		4146.89	0.000741	2.08	30.84	17.80	0.28
CNS6	62.01086	PF 110	64.50	4144.13	4146.83		4146.90	0.000741	2.08	31.01	17.84	0.28
CNS6	62.01086	PF 111	65.00	4144.13	4146.84		4146.91	0.000744	2.09	31.14	17.87	0.28
CNS6	62.01086	PF 112	65.50	4144.13	4146.85		4146.92	0.000745	2.09	31.30	17.90	0.28
CNS6	62.01086	PF 113	66.00	4144.13	4146.86		4146.92	0.000747	2.10	31.44	17.93	0.28
CNS6	62.01086	PF 114	66.50	4144.13	4146.87		4146.93	0.000747	2.10	31.61	17.97	0.28

HEC-RAS Plan: CNS6 River: Carnes Reach: CNS6 (Continued)

Reach	River Sta	Profile	Q Total	Min Ch El	W.S. Elev	Crit W.S.	E.G. Elev	E.G. Slope	Vel Chnl	Flow Area	Top Width	Froude # Chl
			(cfs)	(ft)	(ft)	(ft)	(ft)	(ft/ft)	(ft/s)	(sq ft)	(ft)	
CNS6	62.01086	PF 115	67.00	4144.13	4146.87		4146.94	0.000747	2.11	31.77	18.00	0.28
CNS6	62.01086	PF 116	67.50	4144.13	4146.88		4146.95	0.000750	2.12	31.90	18.03	0.28
CNS6	62.01086	PF 117	68.00	4144.13	4146.89		4146.96	0.000751	2.12	32.05	18.06	0.28
CNS6	62.01086	PF 118	68.50	4144.13	4146.90		4146.97	0.000752	2.13	32.21	18.10	0.28
CNS6	62.01086	PF 119	69.00	4144.13	4146.91		4146.98	0.000752	2.13	32.37	18.13	0.28
CNS6	62.01086	PF 120	69.70	4144.13	4146.92		4146.99	0.000754	2.14	32.58	18.17	0.28

BAKER VALLEY SOIL AND WATER CONSERVATION DISTRICT

POWDER VALLEY CONNECTOR

2016

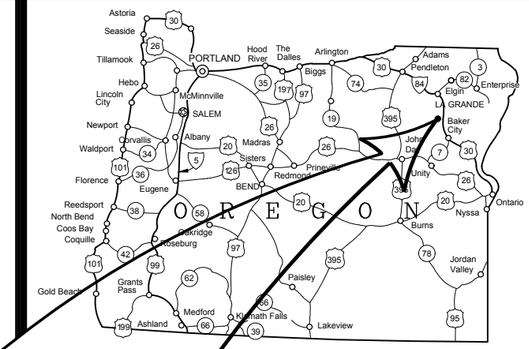

INDEX

- COVER
1 SHEET INDEX AND LEGEND
2 PLAN AND PROFILE - STA. 1+00 TO STA. 13+00
3 PLAN AND PROFILE - STA. 13+00 TO STA. 25+00
4 PLAN AND PROFILE - STA. 25+00 TO STA. 37+00
5 PLAN AND PROFILE - STA. 37+00 TO STA. 49+00
6 PLAN AND PROFILE - STA. 49+00 TO STA. 61+00
7 PLAN AND PROFILE - STA. 61+00 TO STA. 70+24
8 CONNECTION DETAILS TO EXISTING 30 INCH RCP
9 CONTROL VAULT PLAN
10 CONTROL VAULT SECTIONS
11 STRUCTURAL AND MISCELLANEOUS DETAILS
12 TRENCH DETAILS AND CROSS SECTIONS
13 MISCELLANEOUS WATER DETAILS I
14 MISCELLANEOUS WATER DETAILS II
15 MISCELLANEOUS WATER DETAILS III
16 THRUST BLOCK DETAILS I
17 THRUST BLOCK DETAILS II

BAKER VALLEY SOIL AND WATER CONSERVATION DISTRICT has reviewed these drawings and approved them for construction to fulfill the intended project objectives.

_____ Date

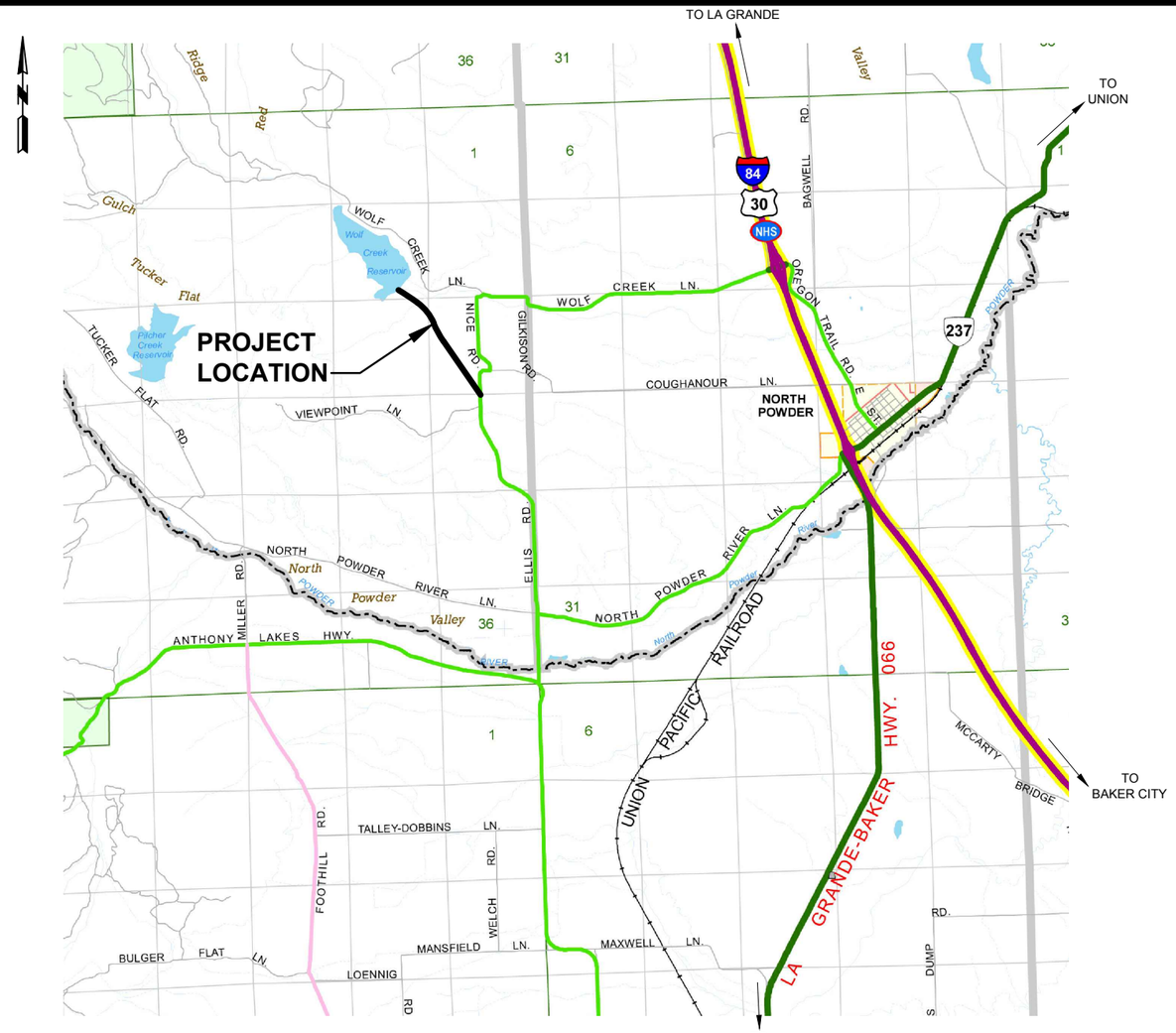

VICINITY MAP

N.T.S.

BAKER COUNTY SWCDs
BAKER VALLEY · BURNT RIVER · EAGLE VALLEY · KEATING

BOARD OF DIRECTORS

MIKE WILLIAMS, Chair
MYRON MILES, Vice Chair
DERYL LEGGETT, Secretary/Treasurer
TIM A. KERNS
RAY FIELD
BRENT THOMPSON
CURTIS MARTIN

DISTRICT MANAGER

WHITNEY COLLINS

POWDER VALLEY WATER CONTROL DISTRICT

ANDREW UMPLEBY, Manager

PRELIMINARY

anderson perry & associates, inc.
engineering • surveying • natural resources
1901 N. Fir Street - La Grande, OR 97850 Ph: (541)963-8309 Fax: (541)963-5456
LA GRANDE, OR. WALLA WALLA, WA. PRINEVILLE, OR.

COPYRIGHT 2016 BY ANDERSON PERRY & ASSOC., INC.

Q:\BAKERVALLEY_SWCD\99-14_PowderValleyConnector\DRAFTING\PLOT FILES\060-DSN\99-14-060G-001COV.dwg, cover, 1/8/2016 3:27:58 PM, prichardson

SHEET INDEX

1"=300'

PLAN LEGEND

	EXISTING	PROPOSED
WATER LINE	IRR	36"HDPE
VALVE		
PIPE DRAIN/PUMP OUT		
AIR RELEASE VALVE		
SIGN		
CONTROL POINT		
GRAVEL ROADWAY		

GENERAL NOTES

1. 36" HDPE PRESSURE PIPE SHALL BE DUCTILE IRON PIPE SIZE (DIPS) SDR 32.5 (63 PSI).
2. THE 36" HDPE PIPE SHALL BE INSTALLED WITH 3 FT. MINIMUM COVER.
3. WHERE PIPE IS NOT INSTALLED THE MAHARRY-BLEVINS DITCH IS TO BE FILLED WITH MATERIAL ORIGINALLY EXCAVATED TO CONSTRUCT THE DITCH. NO IMPORTED MATERIAL IS TO BE USED.

REVISION	BY	DATE

DESIGNED BY L. UMPLEBY
DRAWN BY P. RICHARDSON
REVIEWED BY B. MOORE

300 0 300 600 900
SCALE IN FEET

HORZ. SCALE 1"=300' VERT. SCALE
JOB NUMBER 99-14 DATE 2016
ACAD FILE: 99-14-060G-002IDX.dwg

COPYRIGHT 2016 BY ANDERSON PERRY & ASSOC., INC.

THIS DRAWING HAS BEEN REDUCED 50%. ADJUST SCALE ACCORDINGLY. BARSCALE SHOWN IS ACCURATE.

PRELIMINARY

anderson perry & associates, inc.
engineering · surveying · natural resources
LA GRANDE, OR. WALLA WALLA, WA. PRINEVILLE, OR.

BAKER VALLEY SOIL AND WATER CONSERVATION DISTRICT
POWDER VALLEY CONNECTOR

SHEET INDEX AND LEGEND

SHEET 1

Q:\BAKERVALLEY_SWCD\99-14_PowderValleyConnector\DRAFTING\PLOT FILES\060-DSN\99-14-060G-002IDX.dwg, INDEX, 1/8/2016 3:29:08 PM, prichardson

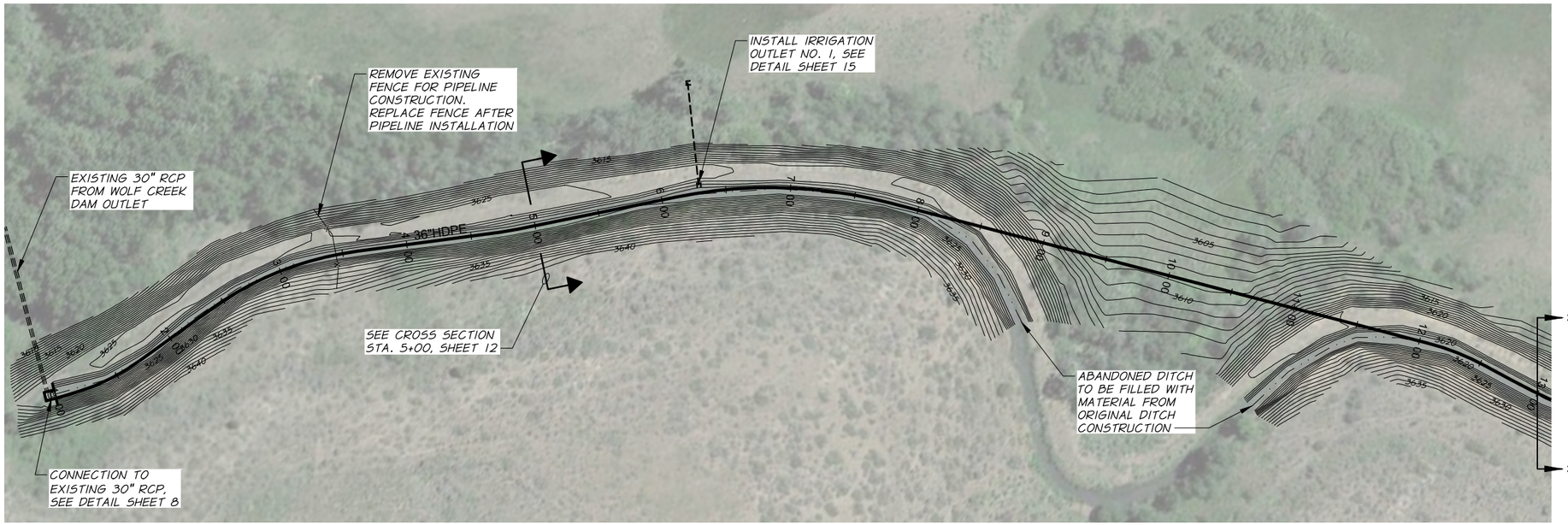

PLAN

1"=50'

NOTES:

1. GRADES SHOWN ARE APPROXIMATE. ADJUST GRADES AS REQUIRED TO MAINTAIN 3 FT. MIN. COVER OVER PIPE.
2. 36" HDPE PIPE TO BE INSTALLED AS SHOWN ON THE DRAWINGS. MINIMUM VERTICAL AND HORIZONTAL BENDING RADIUS FOR 36" HDPE PIPE IS 150'
3. MAINTAIN CONTINUOUS DOWNWARD SLOPE ON THE PIPELINE EXCEPT WHERE DRAWINGS SHOW OTHERWISE. AVOID HIGH SPOTS IN THE PIPELINE.
4. EXCESS EXCAVATED MATERIAL TO BE USED FOR BACKFILL AND BE BLENDED INTO SURFACE RESTORATION ALONG PIPELINE ROUTE. MAINTAIN A 10' WIDE ACCESS ROAD OVER PIPE.
5. ABANDONED DITCH TO BE FILLED AND RESTORED TO AS NEAR NATURAL CONTOURS AS POSSIBLE. NO ACCESS ROAD IS REQUIRED IN ABANDONED DITCH AREAS.

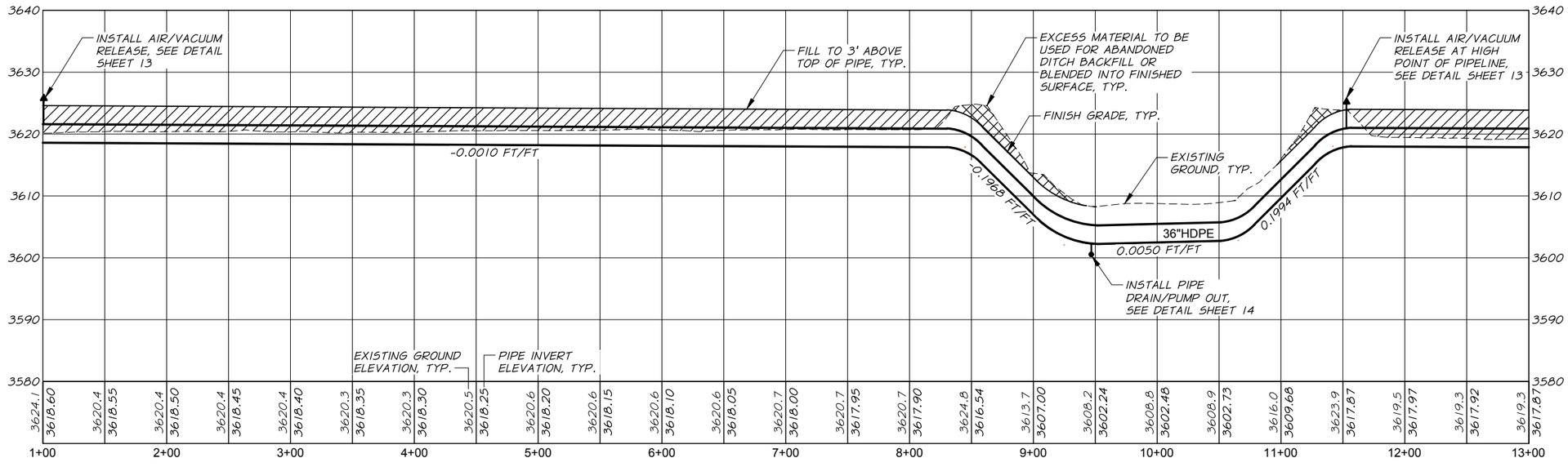

PROFILE

HORZ. 1"=50
VERT. 1"=10'

REVISION	BY	DATE	
DESIGNED BY	L. UMPLEBY		
DRAWN BY	D. CHRISTMAN		
REVIEWED BY	B. MOORE		

50 0 50 100 150
HORZ. SCALE IN FEET
10 0 10 20 30
VERT. SCALE IN FEET

HORZ. SCALE 1"=50' | VERT. SCALE 1"=10'
JOB NUMBER 99-14 | DATE 2016
ACAD FILE: 99-14-060C-101PNP.dwg

COPYRIGHT 2016 BY ANDERSON PERRY & ASSOC., INC.

THIS DRAWING HAS BEEN REDUCED 50%. ADJUST SCALE ACCORDINGLY. BARSCALE SHOWN IS ACCURATE.

PRELIMINARY

anderson perry & associates, inc.
engineering - surveying - natural resources
LA GRANDE, OR. WALLA WALLA, WA. PRINEVILLE, OR.

BAKER VALLEY SOIL AND WATER CONSERVATION DISTRICT

POWDER VALLEY CONNECTOR

PLAN AND PROFILE
STA. 1+00 TO STA. 13+00

SHEET 2

Q:\BAKERVALLEY_SWCD\99-14_PowderValleyConnector\DRAFTING\PLOT FILES\060-DSN\99-14-060C-101PNP.dwg, PNP, 1/8/2016 3:30:08 PM, prichardson

Q:\BAKERVALLEY_SWCD\99-14_PowderValleyConnector\DRAFTING\PLOT FILES\060-DSN\99-14-060C-102PNP.dwg, PNP, 1/8/2016 3:31:07 PM, prichardson

PLAN

1"=50'

NOTES:

1. GRADES SHOWN ARE APPROXIMATE. ADJUST GRADES AS REQUIRED TO MAINTAIN 3 FT. MIN. COVER OVER PIPE.
2. 36" HDPE PIPE TO BE INSTALLED AS SHOWN ON THE DRAWINGS. MINIMUM VERTICAL AND HORIZONTAL BENDING RADIUS FOR 36" HDPE PIPE IS 150'
3. MAINTAIN CONTINUOUS DOWNWARD ON THE PIPELINE EXCEPT WHERE DRAWINGS SHOW OTHERWISE. AVOID HIGH SPOTS IN THE PIPELINE.
4. EXCESS EXCAVATED MATERIAL TO BE USED FOR BACKFILL AND BE BLENDED INTO SURFACE RESTORATION ALONG PIPELINE ROUTE. MAINTAIN A 10' WIDE ACCESS ROAD OVER PIPE.
5. ABANDONED DITCH TO BE FILLED AND RESTORED TO AS NEAR NATURAL CONTOURS AS POSSIBLE. NO ACCESS ROAD IS REQUIRED IN ABANDONED DITCH AREAS.

PROFILE

HORZ. 1"=50
VERT. 1"=10'

REVISION	BY	DATE

DESIGNED BY L. UMPLEBY
DRAWN BY D. CHRISTMAN
REVIEWED BY B. MOORE

50 0 50 100 150 HORZ. SCALE IN FEET
10 0 10 20 30 VERT. SCALE IN FEET

HORZ. SCALE 1"=50' VERT. SCALE 1"=10'
JOB NUMBER 99–14 DATE 2016
ACAD FILE: 99–14–060C–102PNP.dwg

COPYRIGHT 2016 BY ANDERSON PERRY & ASSOC., INC.

THIS DRAWING HAS BEEN REDUCED 50%. ADJUST SCALE ACCORDINGLY. BARSCALE SHOWN IS ACCURATE.

PRELIMINARY

anderson perry & associates, inc.
engineering - surveying - natural resources
LA GRANDE, OR. WALLA WALLA, WA. PRINEVILLE, OR.

BAKER VALLEY SOIL AND WATER CONSERVATION DISTRICT
POWDER VALLEY CONNECTOR

PLAN AND PROFILE
STA. 13+00 TO STA. 25+00

SHEET
3

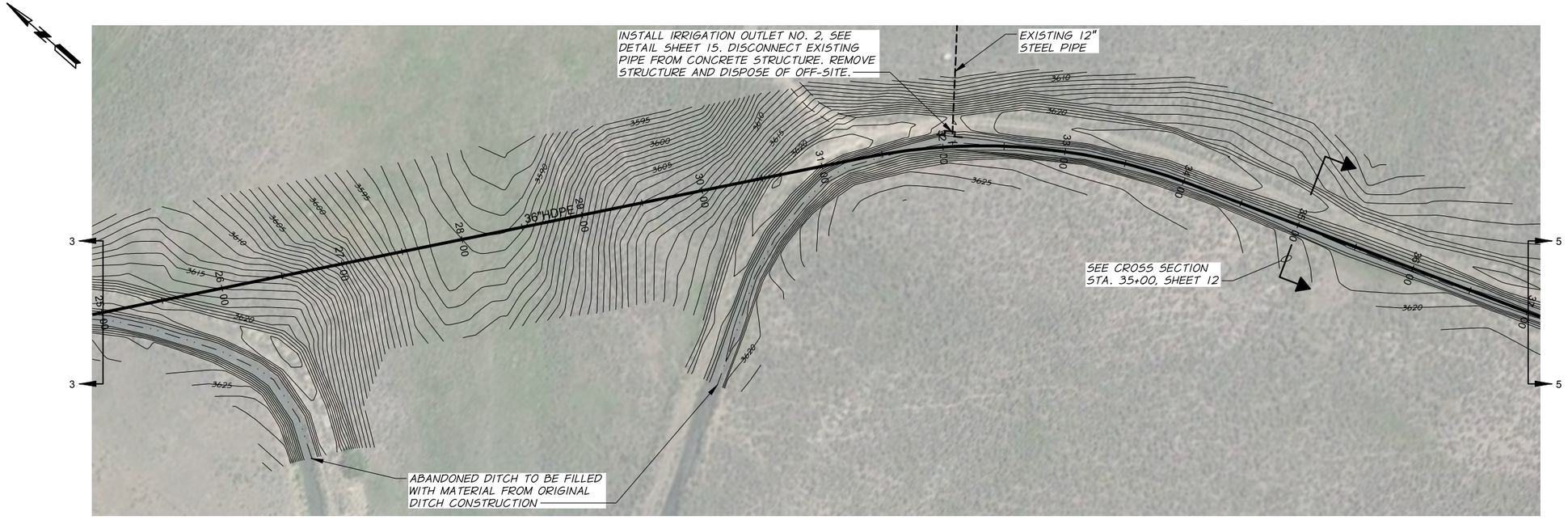

PLAN

1"=50'

NOTES:

1. GRADES SHOWN ARE APPROXIMATE. ADJUST GRADES AS REQUIRED TO MAINTAIN 3 FT. MIN. COVER OVER PIPE.
2. 36" HDPE PIPE TO BE INSTALLED AS SHOWN ON THE DRAWINGS. MINIMUM VERTICAL AND HORIZONTAL BENDING RADIUS FOR 36" HDPE PIPE IS 150'
3. MAINTAIN CONTINUOUS DOWNWARD ON THE PIPELINE EXCEPT WHERE DRAWINGS SHOW OTHERWISE. AVOID HIGH SPOTS IN THE PIPELINE.
4. EXCESS EXCAVATED MATERIAL TO BE USED FOR BACKFILL AND BE BLENDED INTO SURFACE RESTORATION ALONG PIPELINE ROUTE. MAINTAIN A 10' WIDE ACCESS ROAD OVER PIPE.
5. ABANDONED DITCH TO BE FILLED AND RESTORED TO AS NEAR NATURAL CONTOURS AS POSSIBLE. NO ACCESS ROAD IS REQUIRED IN ABANDONED DITCH AREAS.

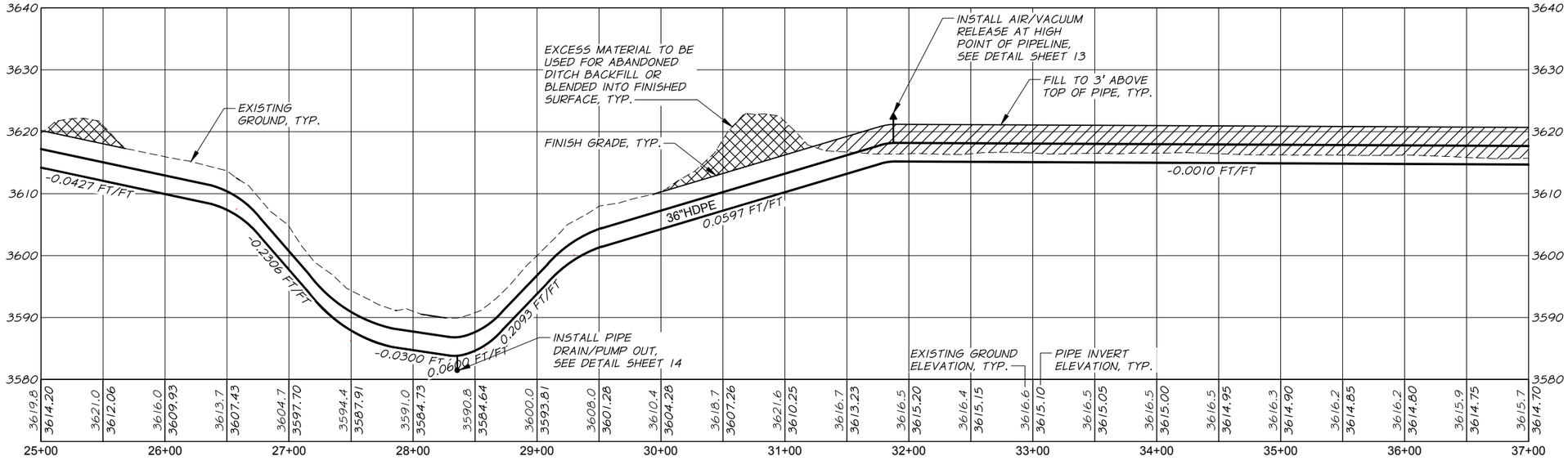

PROFILE

HORZ. 1"=50
VERT. 1"=10'

REVISION	BY	DATE

50 0 50 100 150
HORZ. SCALE IN FEET
10 0 10 20 30
VERT. SCALE IN FEET

HORZ. SCALE	1"=50'	VERT. SCALE	1"=10'
JOB NUMBER	99-14	DATE	2016
ACAD FILE:	99-14-060C-103PNP.dwg		

DESIGNED BY L. UMPLEBY
DRAWN BY D. CHRISTMAN
REVIEWED BY B. MOORE

COPYRIGHT 2016 BY ANDERSON PERRY & ASSOC., INC.

THIS DRAWING HAS BEEN REDUCED 50%. ADJUST SCALE ACCORDINGLY. BARSCALE SHOWN IS ACCURATE.

PRELIMINARY

anderson perry & associates, inc.
engineering - surveying - natural resources
LA GRANDE, OR. WALLA WALLA, WA. PRINEVILLE, OR.

BAKER VALLEY SOIL AND WATER CONSERVATION DISTRICT

POWDER VALLEY CONNECTOR

PLAN AND PROFILE STA. 25+00 TO STA. 37+00

SHEET 4

Q:\BAKERVALLEY_SWCD\99-14_PowderValleyConnector\DRAFTING\PLOT FILES\060-DSN\99-14-060C-103PNP.dwg, PNP, 1/8/2016 3:32:22 PM, prichardson

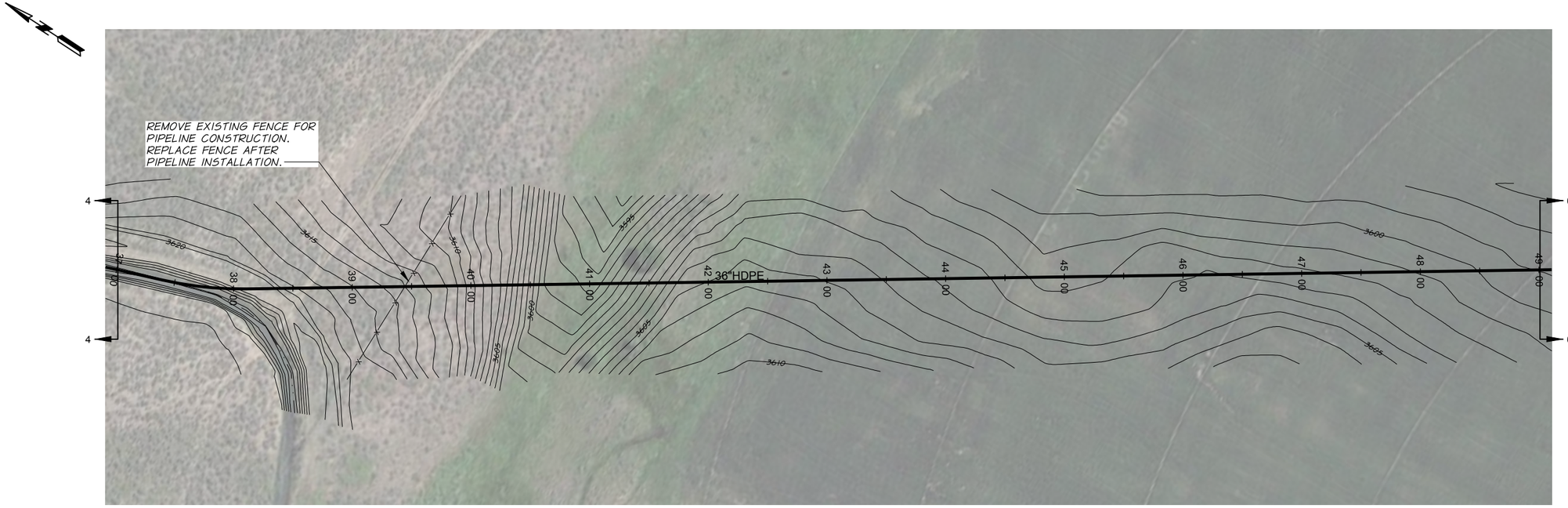

PLAN

1"=50'

NOTES:

1. GRADES SHOWN ARE APPROXIMATE. ADJUST GRADES AS REQUIRED TO MAINTAIN 3 FT. MIN. COVER OVER PIPE.
2. 36" HDPE PIPE TO BE INSTALLED AS SHOWN ON THE DRAWINGS. MINIMUM VERTICAL AND HORIZONTAL BENDING RADIUS FOR 36" HDPE PIPE IS 150'
3. MAINTAIN CONTINUOUS DOWNWARD ON THE PIPELINE EXCEPT WHERE DRAWINGS SHOW OTHERWISE. AVOID HIGH SPOTS IN THE PIPELINE.
4. EXCESS EXCAVATED MATERIAL TO BE USED FOR BACKFILL AND BE BLENDED INTO SURFACE RESTORATION ALONG PIPELINE ROUTE. MAINTAIN A 10' WIDE ACCESS ROAD OVER PIPE.
5. ABANDONED DITCH TO BE FILLED AND RESTORED TO AS NEAR NATURAL CONTOURS AS POSSIBLE. NO ACCESS ROAD IS REQUIRED IN ABANDONED DITCH AREAS.
6. MAINTAIN NEGATIVE PIPELINE SLOPE IN CULTIVATED AREA. PIPELINE COVER MAY BE GREATER THAN 3' IN SOME AREAS.

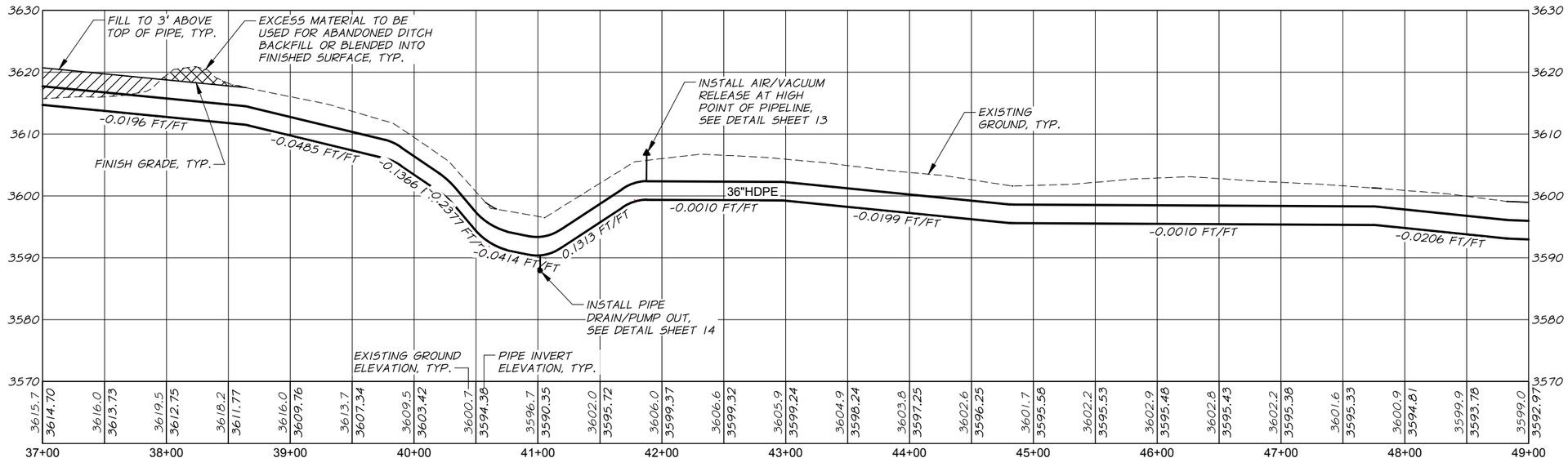

PROFILE

HORZ. 1"=50
VERT. 1"=10'

50 0 50 100 150
HORZ. SCALE IN FEET
10 0 10 20 30
VERT. SCALE IN FEET

REVISION	BY	DATE

HORZ. SCALE	1"=50'
VERT. SCALE	1"=10'
DESIGNED BY	L. UMPLEBY
DRAWN BY	D. CHRISTMAN
REVIEWED BY	B. MOORE
JOB NUMBER	99-14
DATE	2016
ACAD FILE:	99-14-060C-104PNP.dwg

COPYRIGHT 2016 BY ANDERSON PERRY & ASSOC., INC.

THIS DRAWING HAS BEEN REDUCED 50%. ADJUST SCALE ACCORDINGLY. BARSCALE SHOWN IS ACCURATE.

PRELIMINARY

anderson perry & associates, inc.
engineering - surveying - natural resources
LA GRANDE, OR. WALLA WALLA, WA. PRINEVILLE, OR.

BAKER VALLEY SOIL AND WATER CONSERVATION DISTRICT

POWDER VALLEY CONNECTOR

PLAN AND PROFILE STA. 37+00 TO STA. 49+00

SHEET 5

Q:\BAKERVALLEY_SWCD\99-14_PowderValleyConnector\DRAFTING\PLOT FILES\060-DSN\99-14-060C-104PNP.dwg, PNP, 1/8/2016 3:33:30 PM, prichardson

PLAN

1"=50'

NOTES:

1. GRADES SHOWN ARE APPROXIMATE. ADJUST GRADES AS REQUIRED TO MAINTAIN 3 FT. MIN. COVER OVER PIPE.
2. 36" HDPE PIPE TO BE INSTALLED AS SHOWN ON THE DRAWINGS. MINIMUM VERTICAL AND HORIZONTAL BENDING RADIUS FOR 36" HDPE PIPE IS 150'
3. MAINTAIN CONTINUOUS DOWNWARD ON THE PIPELINE EXCEPT WHERE DRAWINGS SHOW OTHERWISE. AVOID HIGH SPOTS IN THE PIPELINE.
4. EXCESS EXCAVATED MATERIAL TO BE USED FOR BACKFILL AND BE BLENDED INTO SURFACE RESTORATION ALONG PIPELINE ROUTE. MAINTAIN A 10' WIDE ACCESS ROAD OVER PIPE.
5. ABANDONED DITCH TO BE FILLED AND RESTORED TO AS NEAR NATURAL CONTOURS AS POSSIBLE. NO ACCESS ROAD IS REQUIRED IN ABANDONED DITCH AREAS.
6. MAINTAIN NEGATIVE PIPELINE SLOPE IN CULTIVATED AREA. PIPELINE COVER MAY BE GREATER THAN 3' IN SOME AREAS.

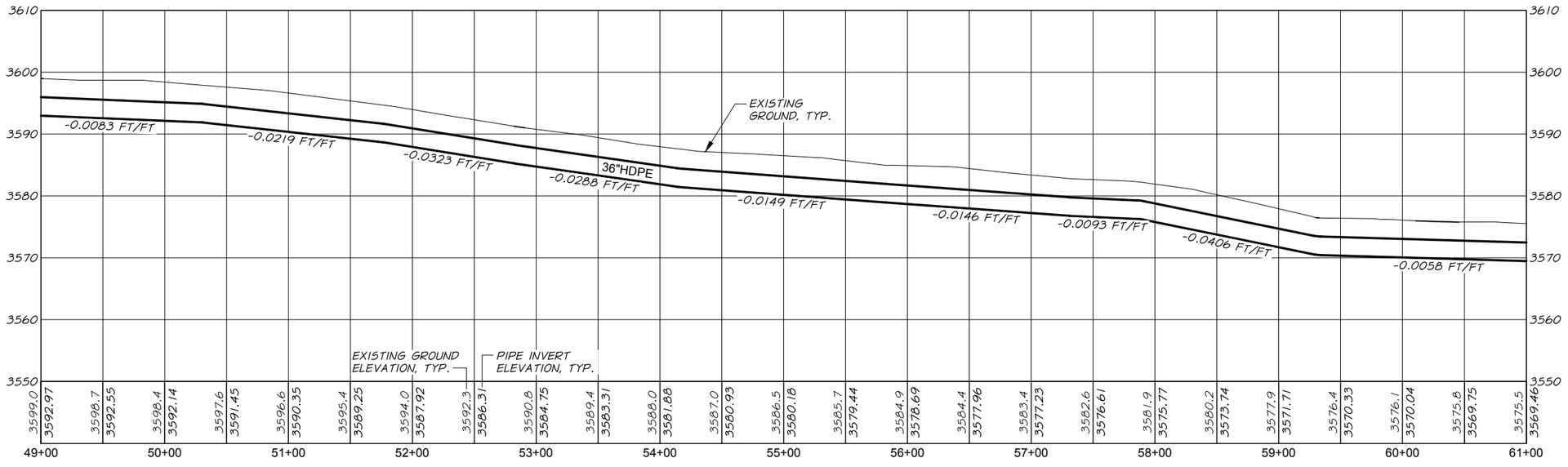

PROFILE

HORZ. 1"=50
VERT. 1"=10'

REVISION	BY	DATE

50 0 50 100 150
HORZ. SCALE IN FEET
10 0 10 20 30
VERT. SCALE IN FEET

HORZ. SCALE	1"=50'	VERT. SCALE	1"=10'
JOB NUMBER	99-14	DATE	2016
ACAD FILE:	99-14-060C-105PNP.dwg		

DESIGNED BY	L. UMPLEBY
DRAWN BY	D. CHRISTMAN
REVIEWED BY	B. MOORE

COPYRIGHT 2016 BY ANDERSON PERRY & ASSOC., INC.

THIS DRAWING HAS BEEN REDUCED 50%. ADJUST SCALE ACCORDINGLY. BARSCALE SHOWN IS ACCURATE.

PRELIMINARY

anderson perry & associates, inc.
engineering - surveying - natural resources
LA GRANDE, OR. WALLA WALLA, WA. PRINEVILLE, OR.

BAKER VALLEY SOIL AND WATER CONSERVATION DISTRICT

POWDER VALLEY CONNECTOR

PLAN AND PROFILE STA. 49+00 TO STA. 61+00

SHEET 6

Q:\BAKERVALLEY_SWCD\99-14_PowderValleyConnector\DRAFTING\PLOT FILES\060-DSN\99-14-060C-105PNP.dwg, PNP, 1/8/2016 3:34:28 PM, prichardson

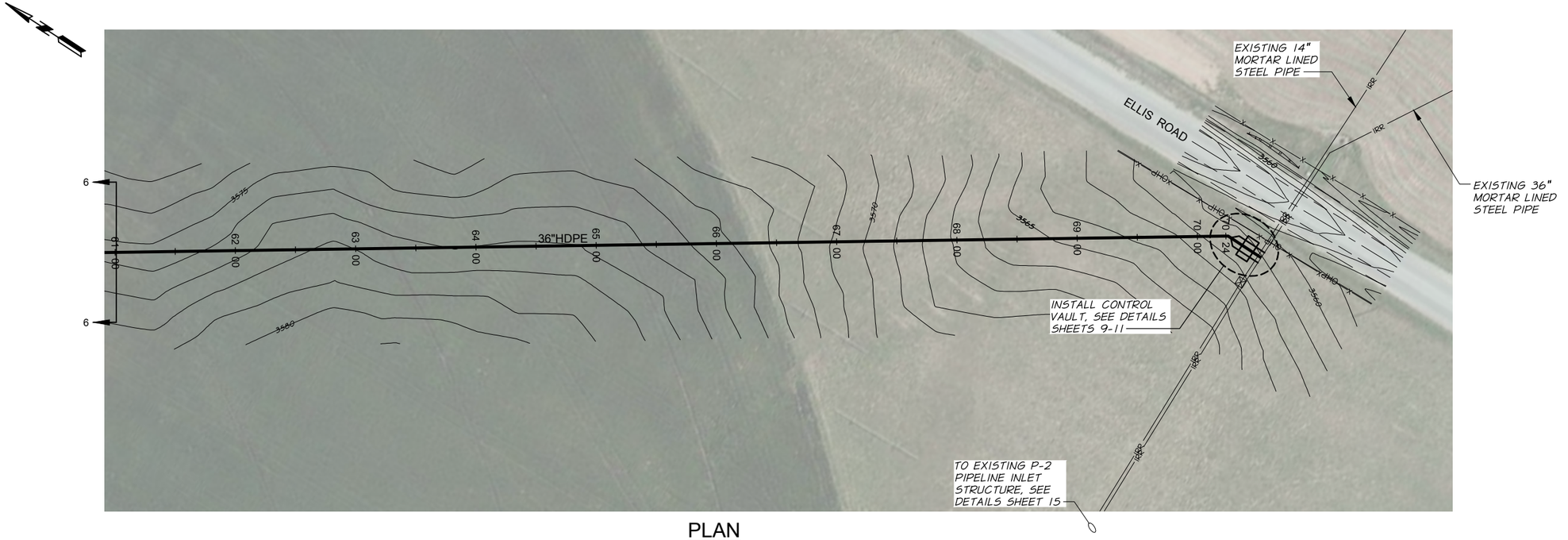

PLAN

1"=50'

NOTES:

1. GRADES SHOWN ARE APPROXIMATE. ADJUST GRADES AS REQUIRED TO MAINTAIN 3 FT. MIN. COVER OVER PIPE.
2. 36" HDPE PIPE TO BE INSTALLED AS SHOWN ON THE DRAWINGS. MINIMUM VERTICAL AND HORIZONTAL BENDING RADIUS FOR 36" HDPE PIPE IS 150'
3. MAINTAIN CONTINUOUS DOWNWARD ON THE PIPELINE EXCEPT WHERE DRAWINGS SHOW OTHERWISE. AVOID HIGH SPOTS IN THE PIPELINE.
4. EXCESS EXCAVATED MATERIAL TO BE USED FOR BACKFILL AND BE BLENDED INTO SURFACE RESTORATION ALONG PIPELINE ROUTE. MAINTAIN A 10' WIDE ACCESS ROAD OVER PIPE.
5. ABANDONED DITCH TO BE FILLED AND RESTORED TO AS NEAR NATURAL CONTOURS AS POSSIBLE. NO ACCESS ROAD IS REQUIRED IN ABANDONED DITCH AREAS.
6. MAINTAIN NEGATIVE PIPELINE SLOPE IN CULTIVATED AREA. PIPELINE COVER MAY BE GREATER THAN 3' IN SOME AREAS.

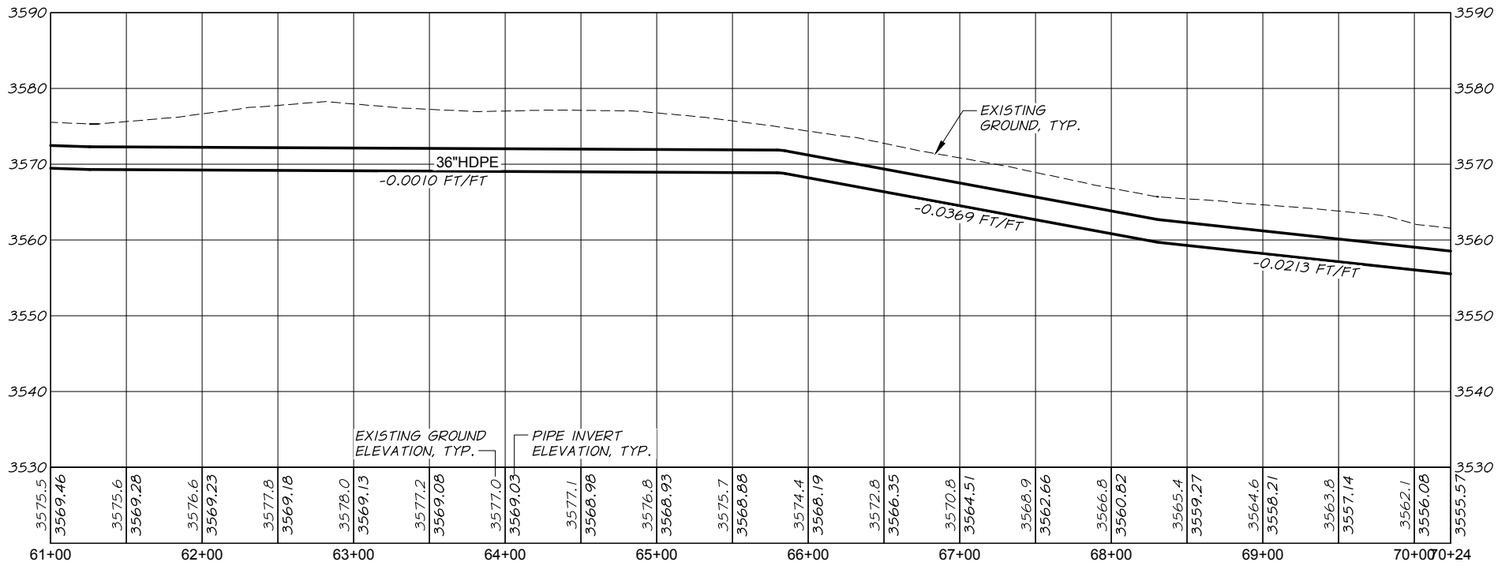

PROFILE

HORZ. 1"=50
VERT. 1"=10'

REVISION	BY	DATE

50 0 50 100 150
HORZ. SCALE IN FEET
10 0 10 20 30
VERT. SCALE IN FEET

HORZ. SCALE	1"=50'	VERT. SCALE	1"=10'
JOB NUMBER	99-14	DATE	2016
ACAD FILE:	99-14-060C-106PNP.dwg		

DESIGNED BY L. UMPLEBY
DRAWN BY D. CHRISTMAN
REVIEWED BY B. MOORE

COPYRIGHT 2016 BY ANDERSON PERRY & ASSOC., INC.

THIS DRAWING HAS BEEN REDUCED 50%. ADJUST SCALE ACCORDINGLY. BARSCALE SHOWN IS ACCURATE.

PRELIMINARY

anderson perry & associates, inc.
engineering - surveying - natural resources
LA GRANDE, OR. WALLA WALLA, WA. PRINEVILLE, OR.

BAKER VALLEY SOIL AND WATER CONSERVATION DISTRICT

POWDER VALLEY CONNECTOR

PLAN AND PROFILE
STA. 61+00 TO STA. 70+24

SHEET 7

Q:\BAKERVALLEY_SWCD\99-14_PowderValleyConnector\DRAFTING\PLOT FILES\060-DSN\99-14-060C-106PNP.dwg, PNP, 1/8/2016 3:35:24 PM, prichardson

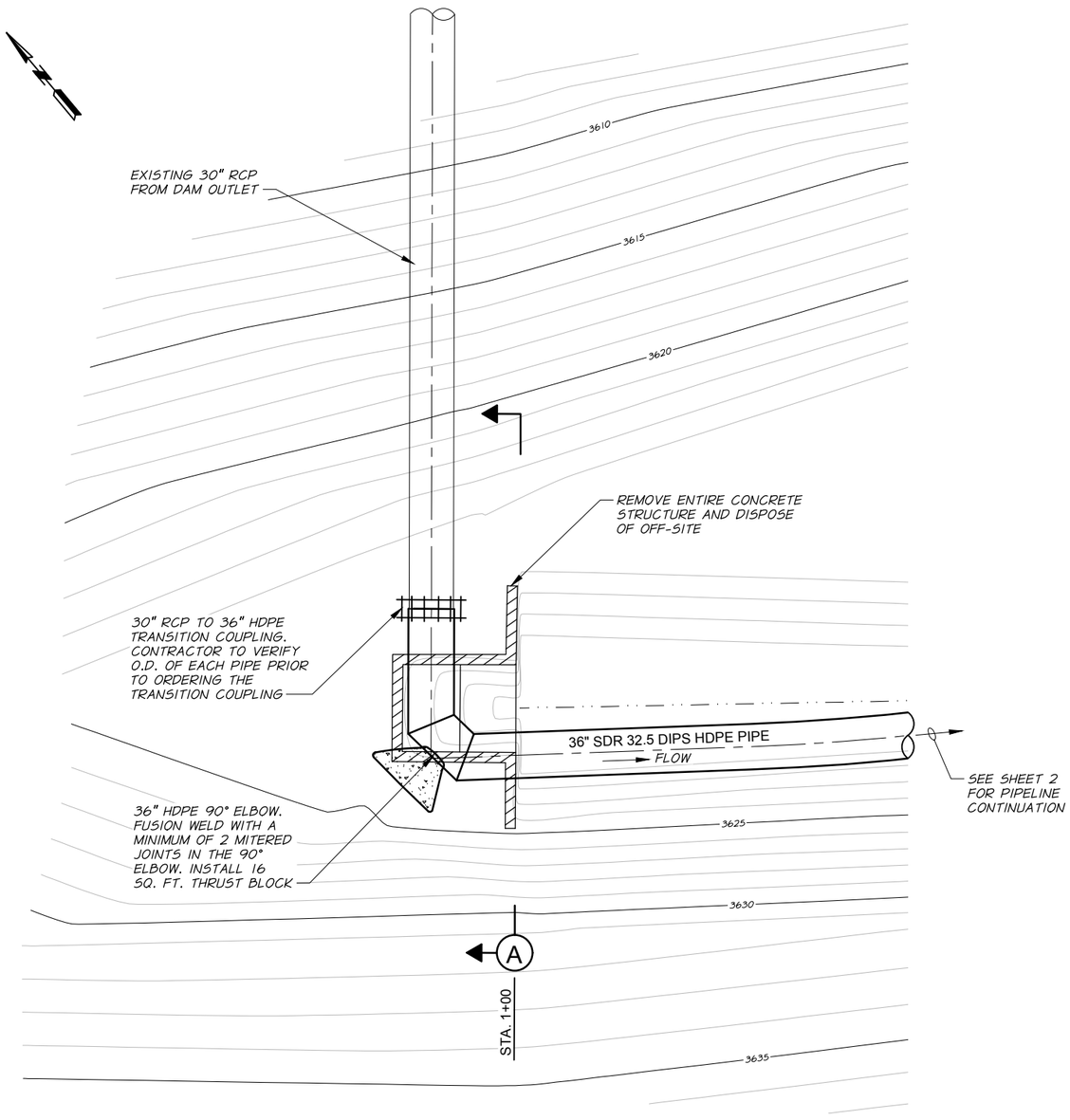

36" HDPE TO 30" RCP CONNECTION DETAIL

PLAN
1"=5'

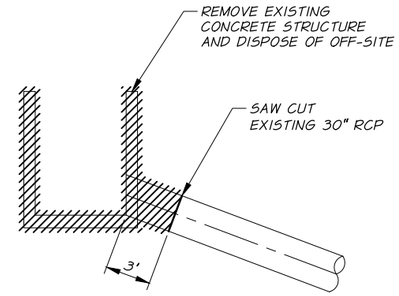

DEMOLITION DETAIL

1"=5'

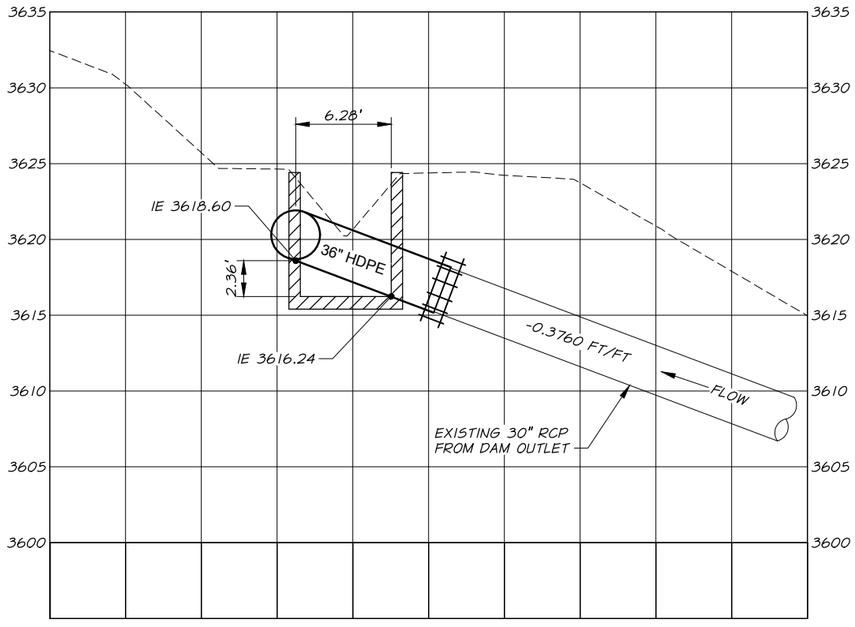

SECTION A

HORZ. 1"=5'
VERT. 1"=5'

REVISION	BY	DATE

5 0 5 10 15
HORZ. SCALE IN FEET
5 0 5 10 15
VERT. SCALE IN FEET

HORZ. SCALE	1"=5'	VERT. SCALE	1"=5'
JOB NUMBER	99-14	DATE	2016
ACAD FILE:	99-14-060C-107PNP.dwg		

DESIGNED BY L. UMPLEBY
DRAWN BY P. RICHARDSON
REVIEWED BY B. MOORE

COPYRIGHT 2016 BY ANDERSON PERRY & ASSOC., INC.

THIS DRAWING HAS BEEN REDUCED 50%.
ADJUST SCALE ACCORDINGLY.
BARSCALE SHOWN IS ACCURATE.

PRELIMINARY

anderson perry & associates, inc.
engineering - surveying - natural resources
LA GRANDE, OR. WALLA WALLA, WA. PRINEVILLE, OR.

BAKER VALLEY SOIL AND WATER CONSERVATION DISTRICT
POWDER VALLEY CONNECTOR

CONNECTION DETAILS TO EXISTING 30 INCH RCP

SHEET
8

Q:\BAKERVALLEY_SWCD\99-14_PowderValleyConnector\DRAFTING\PLOT FILES\060-DSN\99-14-060C-107PNP.dwg, CON DET, 1/8/2016 3:37:18 PM, prichardson

PIPING SCHEDULE

1. 16" FLG PRESSURE REDUCING VALVE. CLA-VAL 946-01BYKC WITH 15-75 PSI CRD SPRING OR APPROVED EQUAL
2. 16" LUG TYPE BUTTERFLY VALVE WITH GEAR OPERTOR; KEYSTONE, PRATT, OR APPROVED EQUAL, SEE TECHNICAL SPECIFICATIONS
3. 24" LUG TYPE BUTTERFLY VALVE WITH GEAR OPERATOR; KEYSTONE, PRATT, OR APPROVED EQUAL, SEE TECHNICAL SPECIFICATIONS
4. 16" FLANGED COUPLING ADAPTER, ROMAC STYLE "FC 400" OR APPROVED EQUAL
5. 24" FLANGED COUPLING ADAPTER, ROMAC STYLE "FC 400" OR APPROVED EQUAL
6. 16" COUPLING WITH TIE ROD RESTRAINTS, MINIMUM OF 4 TIE RODS
7. 24" COUPLING WITH TIE ROD RESTRAINTS, MINIMUM OF 4 TIE RODS
8. 4" AIR/VACUUM RELEASE VALVE WITH 4" BALL ISOLATION VALVE. WATERMAN AV-150 OR APPROVED EQUAL
9. PIPE PENETRATIONS TO BE SEALED WATER TIGHT, TYP. ALL PENETRATIONS
10. 8" FLG DI 90° ELBOW
11. 8" FLG DI SPOOL 3'-0" LONG
12. 8" FLG PRESSURE RELIEF VALVE INITIALLY SET AT 65 PSI. CLA-VAL MODEL 50G-01BVKC WITH 0-75 PSI SPRING OR APPROVED EQUAL
13. 8" FLG COUPLING ADAPTER
14. 8" FLGxPE DI PIPE SPOOL, LENGTH AS REQUIRED
15. 2" OUTLET WELDED INTO STEEL PIPE. 2" BRONZE GATE VALVE. PIPE AND FITTINGS AS REQUIRED TO CONNECT TO 2" "Y" FILTER, SEE TECHNICAL SPECIFICATIONS.
16. PIPE SUPPORT, SEE DETAIL SHEET 11
17. PRECAST CONCRETE TOP FOR CONTROL VAULT. INSTALL 3-42"x72" DOUBLE DOOR HATCHES IN CONCRETE TOP. HATCHES TO BE HALLIDAY 52B7242 OR APPROVED EQUAL. LID DESIGN TO BE SUBMITTED TO ENGINEER FOR APPROVAL PRIOR TO LID MANUFACTURE. 3 HATCHES REQUIRED.
18. 16" AND 24" CONNECTIONS TO EXISTING 36" MORTAR LINED STEEL PIPE. CONTRACTOR TO CAREFULLY CUT HOLES IN EXISTING PIPE AS REQUIRED TO AVOID DAMAGE TO MORTAR LINING. CONNECTIONS SHALL BE COATED WITH AN EPOXY PROTECTIVE COATING AFTER WELDING IS COMPLETED. ANY GAP BETWEEN THE STEEL PIPE AND THE MORTAR LINING IS TO BE COMPLETELY SEALED WITH EPOXY.
19. 12" ELECTROMAGNETIC FLOWMETER, SEAMETRICS AG 2000 OR APPROVED EQUAL
20. 12" FLANGED COUPLING ADAPTER
21. 12" LUG TYPE BUTTERFLY VALVE WITH GEAR OPERATOR AND 2" SQUARE OPERATOR NUT
22. 12" STEEL FLGxPE PIPE SPOOL 2'-6" LONG
23. 12" STEEL FLG PIPE SPOOL 1'-6" LONG
24. 12" FLGxPE STEEL PIPE SPOOL WELDED TO 1/4" STEEL PLATE LENGTH AS REQUIRED
25. 12" FLGxPE STEEL PIPE SPOOL 12" LONG WELDED TO 1/4" STEEL PLATE
26. 3'x3'x6" THICK CONCRETE SPLASH PAD
27. 8" FLG WITH 3/4" MESH SCREEN WELDED TO THE FLANGE
28. FLOOR DRAIN WITH 10 CF DRAIN ROCK INSTALLED UNDER DRAIN
29. WADE RAIN STYLE POP-UP DRAIN VALVE OR APPROVED EQUAL
30. 8" FLG DI SPOOL, LENGTH AS REQUIRED
31. CMP METER VAULT. SEE SHEET 13 AIR/VACUUM VALVE ASSEMBLY DETAIL FOR VAULT INSTALLATION DETAILS.

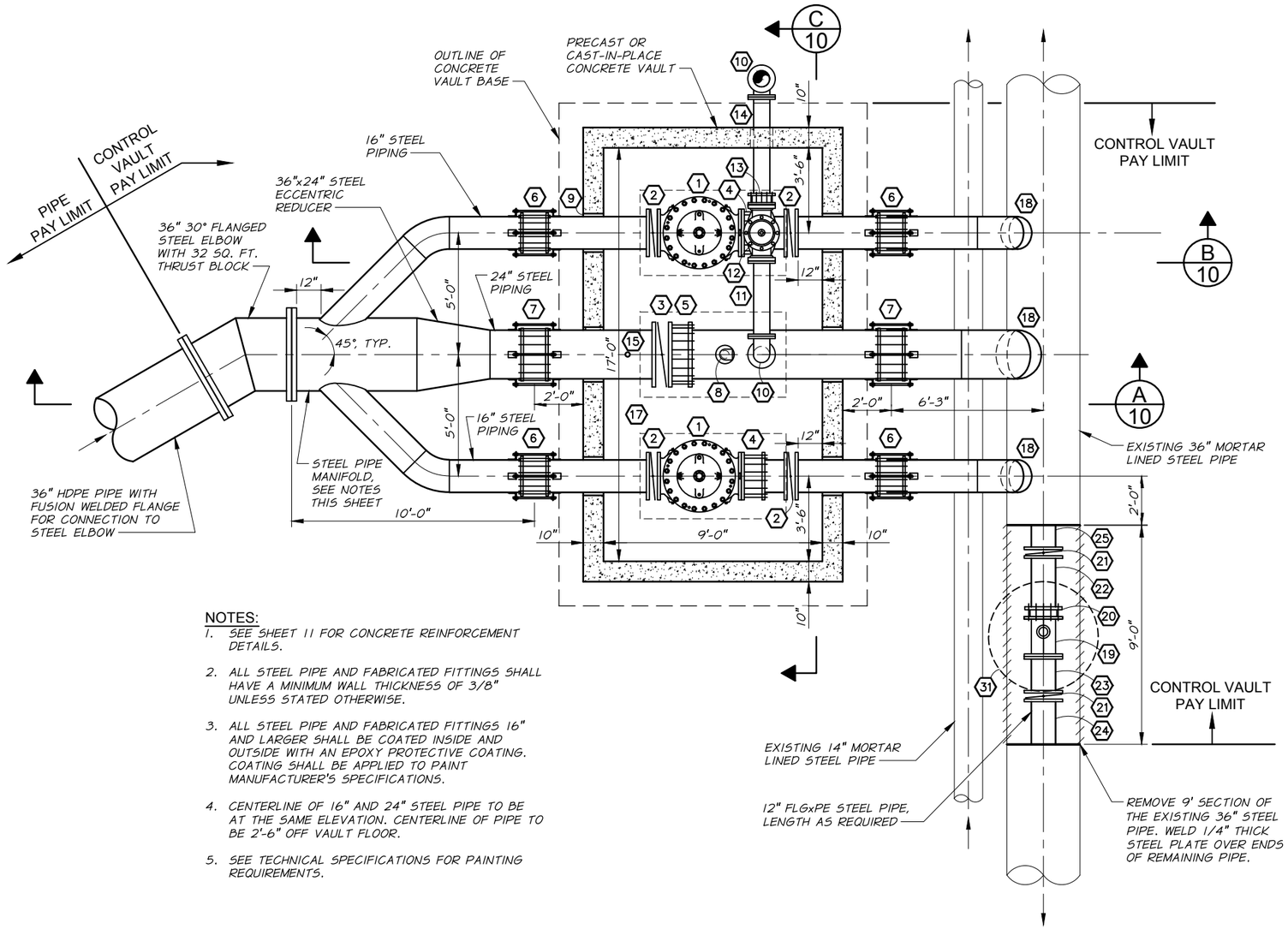

CONTROL VAULT PLAN

3/8"=1'-0"

NOTES:

1. SEE SHEET 11 FOR CONCRETE REINFORCEMENT DETAILS.
2. ALL STEEL PIPE AND FABRICATED FITTINGS SHALL HAVE A MINIMUM WALL THICKNESS OF 3/8" UNLESS STATED OTHERWISE.
3. ALL STEEL PIPE AND FABRICATED FITTINGS 16" AND LARGER SHALL BE COATED INSIDE AND OUTSIDE WITH AN EPOXY PROTECTIVE COATING. COATING SHALL BE APPLIED TO PAINT MANUFACTURER'S SPECIFICATIONS.
4. CENTERLINE OF 16" AND 24" STEEL PIPE TO BE AT THE SAME ELEVATION. CENTERLINE OF PIPE TO BE 2'-6" OFF VAULT FLOOR.
5. SEE TECHNICAL SPECIFICATIONS FOR PAINTING REQUIREMENTS.

REVISION	BY	DATE

SCALE IN FEET: 2 0 2 4 8

DESIGNED BY	L. UMPLEBY	HORZ. SCALE 3/8"=1'-0"	VERT. SCALE
DRAWN BY	D. CHRISTMAN	JOB NUMBER 99-14	DATE 2016
REVIEWED BY	B. MOORE	ACAD FILE: 99-14-060C-501VLT.dwg	

COPYRIGHT 2016 BY ANDERSON PERRY & ASSOC., INC.

THIS DRAWING HAS BEEN REDUCED 50%. ADJUST SCALE ACCORDINGLY. BARSCALE SHOWN IS ACCURATE.

PRELIMINARY

anderson perry & associates, inc.
engineering · surveying · natural resources
LA GRANDE, OR. WALLA WALLA, WA. PRINEVILLE, OR.

BAKER VALLEY SOIL AND WATER CONSERVATION DISTRICT

POWDER VALLEY CONNECTOR

CONTROL VAULT PLAN

SHEET 9

Q:\BAKERVALLEY_SWCD\99-14_PowderValleyConnector\DRAFTING\PLOT FILES\060-DSN\99-14-060C-501VLT.dwg, Layout1, 1/8/2016 3:39:04 PM, prichardson

PIPING SCHEDULE

1. 16" FLG PRESSURE REDUCING VALVE. CLA-VAL 946-01BYKC WITH 15-75 PSI CRD SPRING OR APPROVED EQUAL
2. 16" LUG TYPE BUTTERFLY VALVE WITH GEAR OPERTOR; KEYSTONE, PRATT, OR APPROVED EQUAL, SEE TECHNICAL SPECIFICATIONS
3. 24" LUG TYPE BUTTERFLY VALVE WITH GEAR OPERATOR; KEYSTONE, PRATT, OR APPROVED EQUAL, SEE TECHNICAL SPECIFICATIONS
4. 16" FLANGED COUPLING ADAPTER, ROMAC STYLE "FC 400" OR APPROVED EQUAL
5. 24" FLANGED COUPLING ADAPTER, ROMAC STYLE "FC 400" OR APPROVED EQUAL
6. 16" COUPLING WITH TIE ROD RESTRAINTS, MINIMUM OF 4 TIE RODS
7. 24" COUPLING WITH TIE ROD RESTRAINTS, MINIMUM OF 4 TIE RODS
8. 4" AIR/VACUUM RELEASE VALVE WITH 4" BALL ISOLATION VALVE. WATERMAN AV-150 OR APPROVED EQUAL
9. PIPE PENETRATIONS TO BE SEALED WATER TIGHT, TYP. ALL PENETRATIONS
10. 8" FLG DI 90° ELBOW
11. 8" FLG DI SPOOL 3'-0" LONG
12. 8" FLG PRESSURE RELIEF VALVE INITIALLY SET AT 65 PSI. CLA-VAL MODEL 50G-01BVKC WITH 0-75 PSI SPRING OR APPROVED EQUAL
13. 8" FLG COUPLING ADAPTER
14. 8" FLGxPE DI PIPE SPOOL, LENGTH AS REQUIRED
15. 2" OUTLET WELDED INTO STEEL PIPE. 2" BRONZE GATE VALVE. PIPE AND FITTINGS AS REQUIRED TO CONNECT TO 2" "Y" FILTER, SEE TECHNICAL SPECIFICATIONS.
16. PIPE SUPPORT, SEE DETAIL SHEET 11
17. PRECAST CONCRETE TOP FOR CONTROL VAULT. INSTALL 3-42"x72" DOUBLE DOOR HATCHES IN CONCRETE TOP. HATCHES TO BE HALLIDAY 52B7242 OR APPROVED EQUAL. LID DESIGN TO BE SUBMITTED TO ENGINEER FOR APPROVAL PRIOR TO LID MANUFACTURE. 3 HATCHES REQUIRED.
18. 16" AND 24" CONNECTIONS TO EXISTING 36" MORTAR LINED STEEL PIPE. CONTRACTOR TO CAREFULLY CUT HOLES IN EXISTING PIPE AS REQUIRED TO AVOID DAMAGE TO MORTAR LINING. CONNECTIONS SHALL BE COATED WITH AN EPOXY PROTECTIVE COATING AFTER WELDING IS COMPLETED. ANY GAP BETWEEN THE STEEL PIPE AND THE MORTAR LINING IS TO BE COMPLETELY SEALED WITH EPOXY.
19. 12" ELECTROMAGNETIC FLOWMETER, SEAMETRICS AG 2000 OR APPROVED EQUAL
20. 12" FLANGED COUPLING ADAPTER
21. 12" LUG TYPE BUTTERFLY VALVE WITH GEAR OPERATOR AND 2" SQUARE OPERATOR NUT
22. 12" STEEL FLGxPE PIPE SPOOL 2'-6" LONG
23. 12" STEEL FLG PIPE SPOOL 1'-6" LONG
24. 12" FLGxPE STEEL PIPE SPOOL WELDED TO 1/4" STEEL PLATE LENGTH AS REQUIRED
25. 12" FLGxPE STEEL PIPE SPOOL 12" LONG WELDED TO 1/4" STEEL PLATE
26. 3'x3'x6" THICK CONCRETE SPLASH PAD
27. 8" FLG WITH 3/4" MESH SCREEN WELDED TO THE FLANGE
28. FLOOR DRAIN WITH 10 CF DRAIN ROCK INSTALLED UNDER DRAIN
29. WADE RAIN STYLE POP-UP DRAIN VALVE OR APPROVED EQUAL
30. 8" FLG DI SPOOL, LENGTH AS REQUIRED
31. CMP METER VAULT. SEE SHEET 13 AIR/VACUUM VALVE ASSEMBLY DETAIL FOR VAULT INSTALLATION DETAILS.

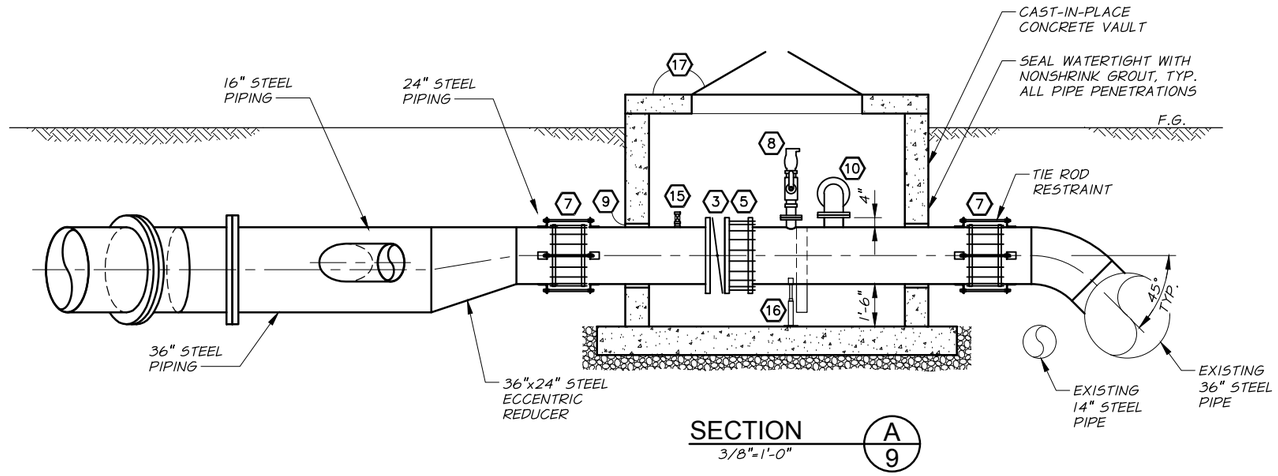

SECTION A/9 — 3/8"=1'-0"

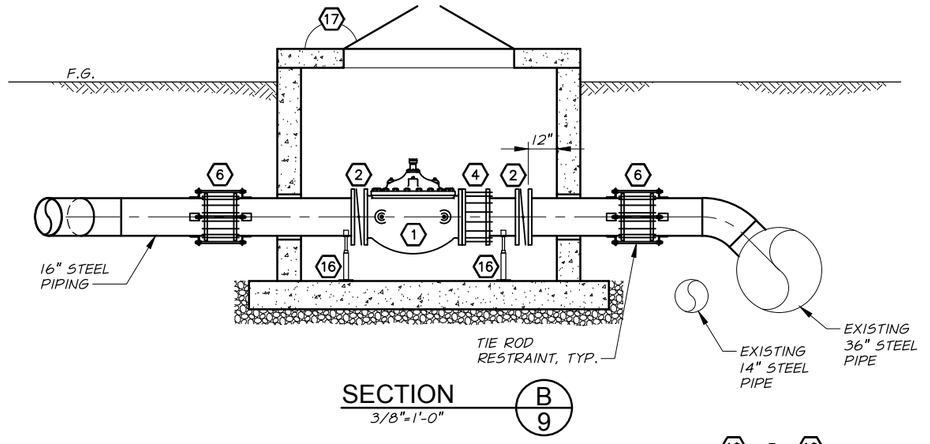

SECTION B/9 — 3/8"=1'-0"

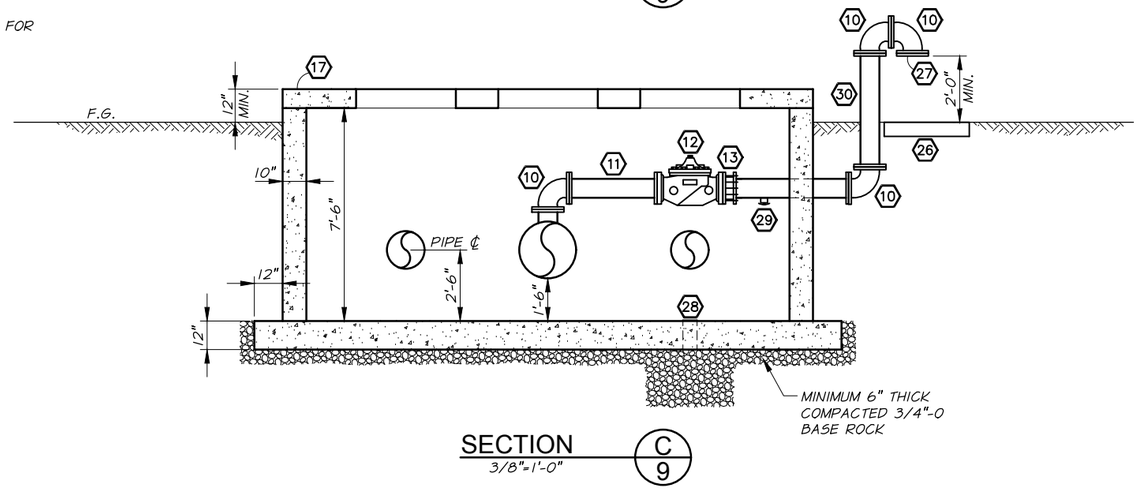

SECTION C/9 — 3/8"=1'-0"

NOTES:

1. SEE SHEET 11 FOR CONCRETE REINFORCEMENT DETAILS.
2. ALL STEEL PIPE AND FABRICATED FITTINGS SHALL HAVE A MINIMUM WALL THICKNESS OF 3/8" UNLESS STATED OTHERWISE.
3. ALL STEEL PIPE AND FABRICATED FITTINGS 16" AND LARGER SHALL BE COATED INSIDE AND OUTSIDE WITH AN EPOXY PROTECTIVE COATING. COATING SHALL BE APPLIED TO PAINT MANUFACTURER'S SPECIFICATIONS.
4. CENTERLINE OF 16" AND 24" STEEL PIPE TO BE AT THE SAME ELEVATION. CENTERLINE OF PIPE TO BE 2'-6" OFF VAULT FLOOR.
5. SEE TECHNICAL SPECIFICATIONS FOR PAINTING REQUIREMENTS.

REVISION	BY	DATE

SCALE IN FEET: 2 0 2 4 8

DESIGNED BY	L. UMPLEBY	HORZ. SCALE 3/8"=1'-0"	VERT. SCALE
DRAWN BY	P. RICHARDSON	JOB NUMBER 99-14	DATE 2016
REVIEWED BY	B. MOORE	ACAD FILE: 99-14-060C-507VLT.dwg	

COPYRIGHT 2016 BY ANDERSON PERRY & ASSOC., INC.

THIS DRAWING HAS BEEN REDUCED 50%. ADJUST SCALE ACCORDINGLY. BARSCALE SHOWN IS ACCURATE.

PRELIMINARY

anderson perry & associates, inc.
engineering - surveying - natural resources
LA GRANDE, OR. WALLA WALLA, WA. PRINEVILLE, OR.

BAKER VALLEY SOIL AND WATER CONSERVATION DISTRICT

POWDER VALLEY CONNECTOR

CONTROL VAULT SECTIONS

SHEET 10

Q:\BAKERVALLEY_SWCD\99-14_PowderValleyConnector\DRAFTING\PLOT FILES\060-DSN\99-14-060C-507VLT.dwg, Layout1, 1/8/2016 3:40:07 PM, prichardson

REINFORCED CONCRETE NOTES

1. ALL CONCRETE CONSTRUCTION, INCLUDING BENDING OF BARS, SHALL COMPLY WITH ACI "BUILDING CODE REQUIREMENTS FOR REINFORCED CONCRETE" (ACI 318), UNLESS OTHERWISE INDICATED ON THE DRAWINGS.
2. UNLESS OTHERWISE INDICATED ON THE DRAWINGS, CONCRETE COVER FROM THE FACE OF CONCRETE TO REINFORCING BARS SHALL BE 2"
3. NO BACKFILL SHALL BE PLACED AGAINST WALLS UNTIL CONCRETE HAS REACHED THE SPECIFIED STRENGTH, SEE TECHNICAL SPECIFICATIONS.

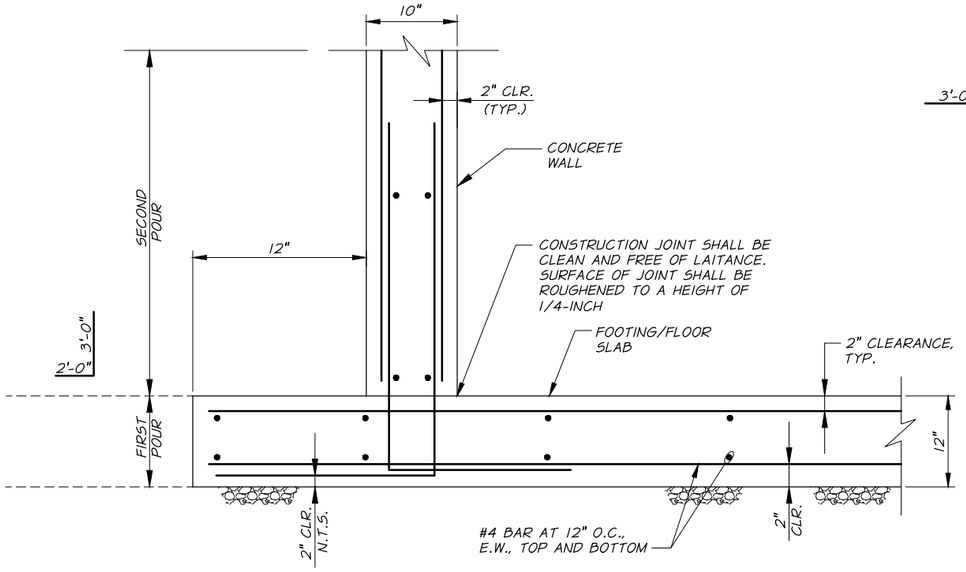

TYPICAL VERTICAL WALL AND FOOTING CONSTRUCTION JOINT DETAIL (EXAMPLE)

N.T.S.

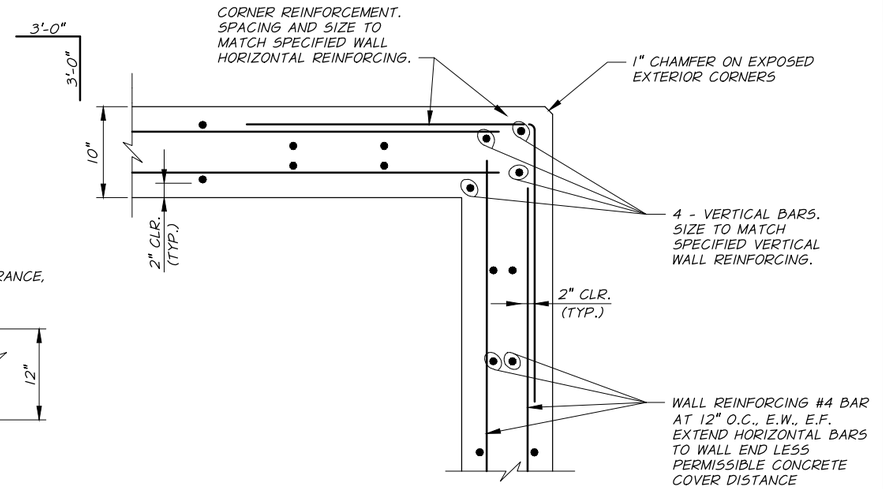

PLAN

TYPICAL EXTERIOR WALL CORNER DETAIL (EXAMPLE)

(DOUBLE MAT REINFORCEMENT)

N.T.S.

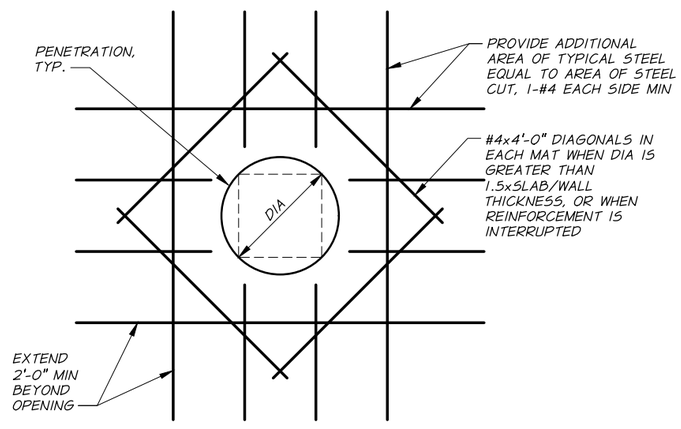

FLOOR/WALL PIPE PENETRATION ADDITIONAL REINFORCEMENT

N.T.S.

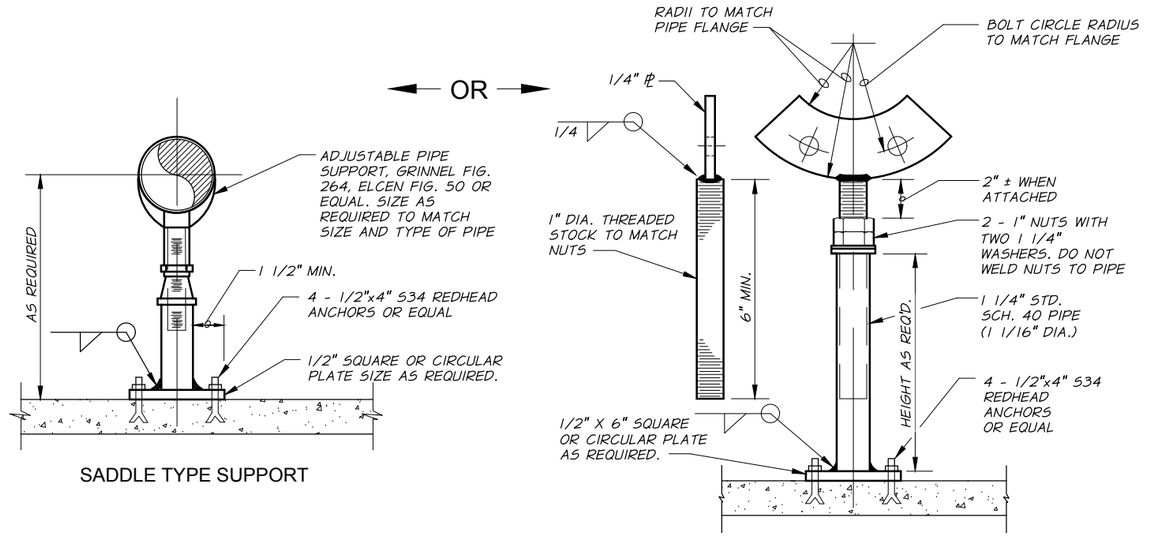

SADDLE TYPE SUPPORT

FOR SUPPORT AT FLANGE

PIPE SUPPORT DETAILS

N.T.S.

REVISION	BY	DATE
DESIGNED BY L. UMPLEBY		
DRAWN BY P. RICHARDSON		
REVIEWED BY B. MOORE		

HORZ. SCALE NONE | VERT. SCALE

JOB NUMBER 99-14 | DATE 2016

ACAD FILE: 99-14-060C-506DET.dwg

COPYRIGHT 2016 BY ANDERSON PERRY & ASSOC., INC.

THIS DRAWING HAS BEEN REDUCED 50%. ADJUST SCALE ACCORDINGLY. BARSCALE SHOWN IS ACCURATE.

PRELIMINARY

anderson perry & associates, inc.
engineering · surveying · natural resources
LA GRANDE, OR. WALLA WALLA, WA. PRINEVILLE, OR.

BAKER VALLEY SOIL AND WATER CONSERVATION DISTRICT

POWDER VALLEY CONNECTOR

STRUCTURAL AND MISCELLANEOUS DETAILS

SHEET 11

Q:\BAKERVALLEY_SWCD\99-14_PowderValleyConnector\DRAFTING\PLOT FILES\060-DSN\99-14-060C-506DET.dwg, Layout1, 1/8/2016 3:43:28 PM, prichardson

NOTES:

1. SEE APPROPRIATE TRENCH RESTORATION DETAILS FOR SURFACE RESTORATION REQUIREMENTS.
2. LOCATING WIRE SHALL BE MINIMUM OF 18 AWG UF SOLID COPPER WITH BLUE COLORED INSULATION.
3. MATERIAL EXCAVATED FROM TRENCH MAY BE USED AS SELECT BACKFILL IF GRADING AND COMPACTION REQUIREMENTS ARE MET. SEE TECHNICAL SPECIFICATIONS.
4. BEDDING AND SELECT BACKFILL TO BE COMPACTED TO THE DENSITY OF THE EXISTING SOIL OR AS APPROVED BY THE ENGINEER.
5. CARE SHOULD BE USED TO ENSURE THAT THE BEDDING MATERIAL IS PROPERLY WORKED UNDER THE HAUNCH OF THE PIPE FOR IT'S FULL LENGTH.

NOTES:

1. SEE APPROPRIATE TRENCH RESTORATION DETAILS FOR SURFACE RESTORATION REQUIREMENTS.
2. SEE TECHNICAL SPECIFICATIONS FOR MATERIALS AND COMPACTION REQUIREMENTS.

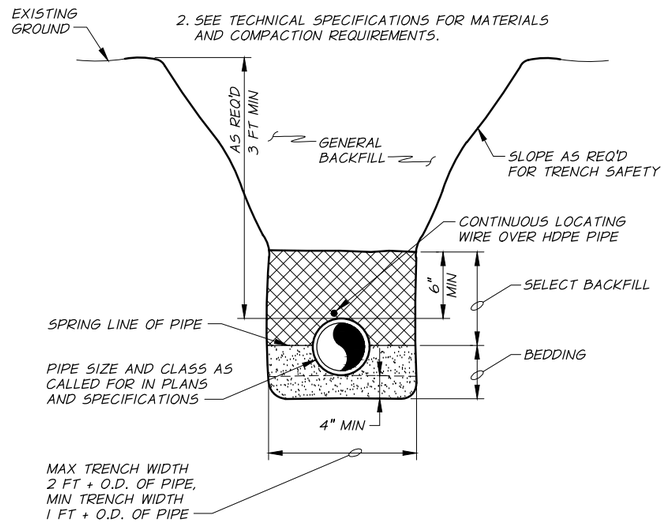

TRENCH EXCAVATION AND BACKFILL

(WITH LOCATING WIRE)

N.T.S.

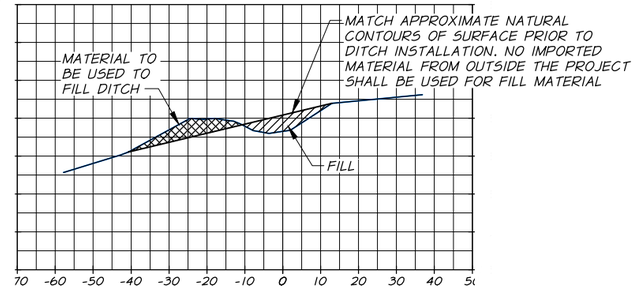

DITCH FILL WHERE NO PIPE IS INSTALLED

HORZ. 1"=20'
VERT. 1"=20'

NOTES:

1. SUITABLE EXCAVATED MATERIAL MAY BE USED FOR SELECT BACKFILL. SEE TECHNICAL SPECIFICATIONS FOR REQUIREMENTS..
2. 10' WIDE ACCESS ROAD TO BE GRADED OVER 36" PIPE INSTALLATION.

REMOVE DEBRIS AND ROCK WHICH ARE NOT TYPICAL TO THE AREA. GRADE TO MATCH EXISTING. RESEED AS REQUIRED, SEE TECHNICAL SPECIFICATIONS "SURFACE RESTORATION".

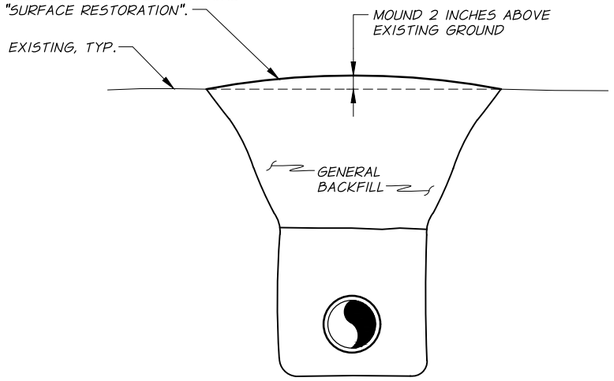

TRENCH RESTORATION

NATURAL AREAS

N.T.S.

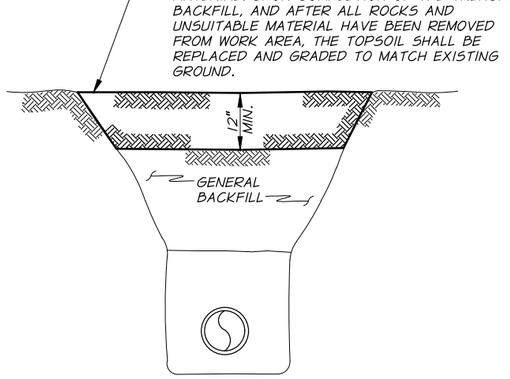

TRENCH RESTORATION

AGRICULTURAL AREAS

N.T.S.

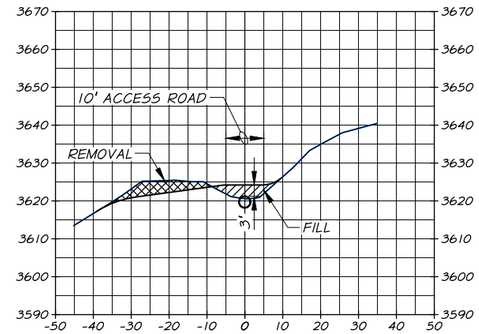

CROSS SECTION STA. 5+00

HORZ. 1"=20'
VERT. 1"=20'

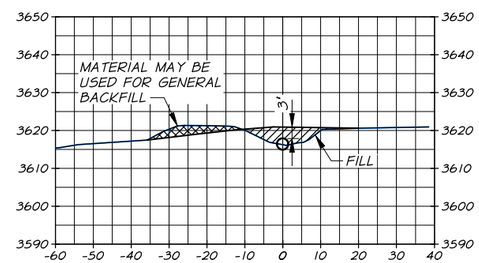

CROSS SECTION STA. 35+00

TYPICAL BACKFILL WHERE PIPE IS INSTALLED

HORZ. 1"=20'
VERT. 1"=20'

REVISION	BY	DATE	
DESIGNED BY	L. UMPLEBY		
DRAWN BY	P. RICHARDSON		
REVIEWED BY	B. MOORE		

20 0 20 40 60
SCALE IN FEET

HORZ. SCALE AS SHOWN	VERT. SCALE
JOB NUMBER 99-14	DATE 2016
ACAD FILE: 99-14-060C-502DET.dwg	

COPYRIGHT 2016 BY ANDERSON PERRY & ASSOC., INC.

THIS DRAWING HAS BEEN REDUCED 50%. ADJUST SCALE ACCORDINGLY. BARSCALE SHOWN IS ACCURATE.

PRELIMINARY

anderson perry & associates, inc.
engineering • surveying • natural resources
LA GRANDE, OR. WALLA WALLA, WA. PRINEVILLE, OR.

BAKER VALLEY SOIL AND WATER CONSERVATION DISTRICT

POWDER VALLEY CONNECTOR

TRENCH DETAILS AND CROSS SECTIONS

SHEET 12

Q:\BAKERVALLEY_SWCD\99-14_PowderValleyConnector\DRAFTING\PLOT FILES\060-DSN\99-14-060C-502DET.dwg, MISC DET, 1/8/2016 3:44:55 PM, prichardson

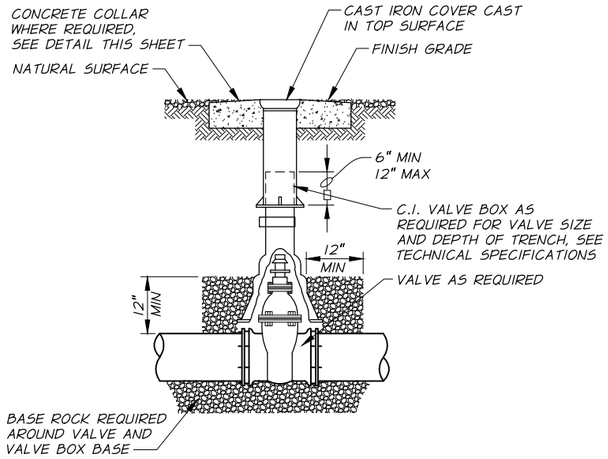

VALVE BOX DETAIL

N.T.S.

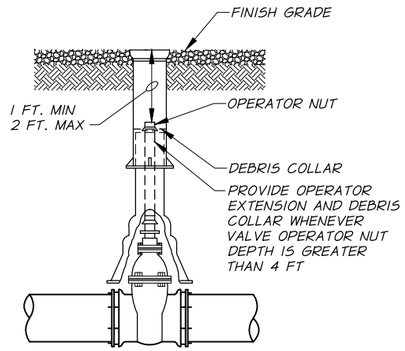

VALVE OPERATOR EXTENSION DETAIL

N.T.S.

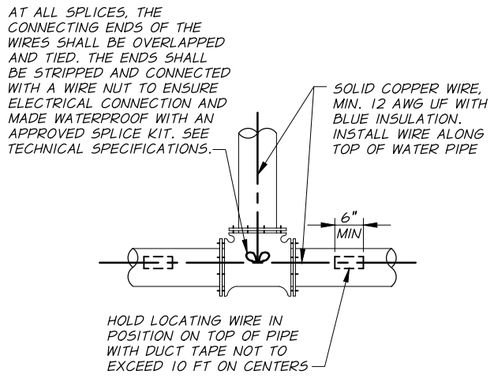

LOCATING WIRE DETAIL

N.T.S.

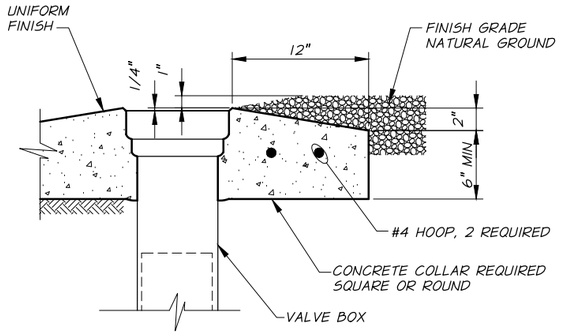

REQUIREMENTS FOR CONCRETE COLLARS:

1. CONCRETE : 3/4", 4000 PSI AT 28 DAYS, 2" TO 4" SLUMP, 4-7% AIR.
2. COLLAR TO BE FORMED AND UNIFORMLY ROUND.
3. SMOOTH BROOM FINISH REQUIRED
4. APPLY CONCRETE CURING COMPOUND.
5. PROTECT FROM TRAFFIC FOR 4 DAYS MINIMUM.

VALVE BOX CONCRETE COLLAR DETAIL

IN NATURAL GROUND

N.T.S.

NOTE:
SEE TECHNICAL SPECIFICATIONS FOR PAINTING REQUIREMENTS.

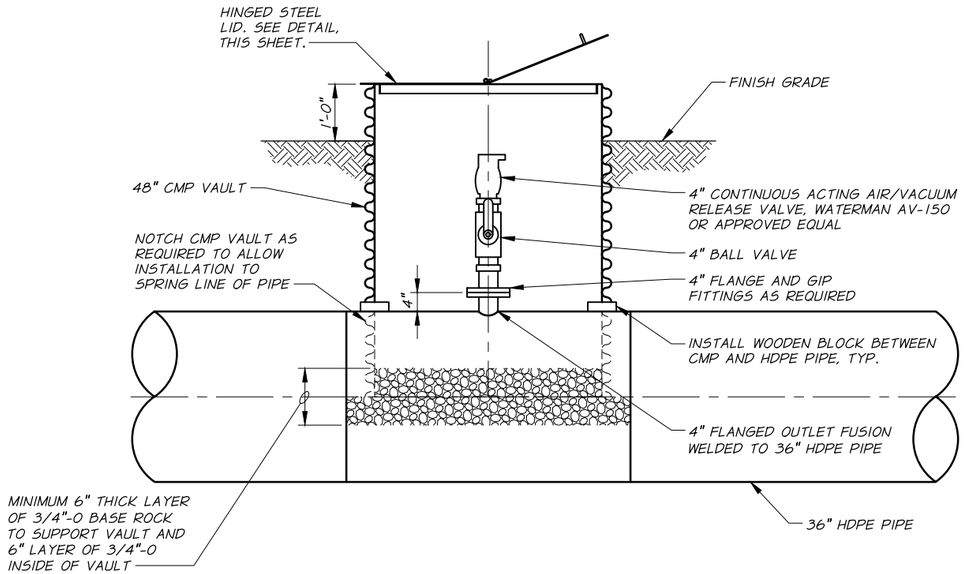

AIR/VACUUM VALVE ASSEMBLY DETAIL

3/4"=1'-0"

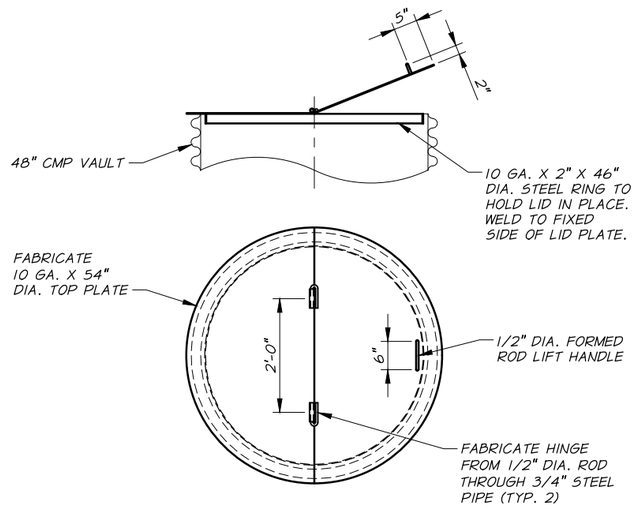

HINGED STEEL LID DETAIL

3/4"=1'-0"

REVISION	BY	DATE

1 0 1 2 4
SCALE IN FEET

HORZ. SCALE	AS SHOWN	VERT. SCALE	
JOB NUMBER	99-14	DATE	2016
ACAD FILE:	99-14-060C-503DET.dwg		

DESIGNED BY L. UMPLEBY
DRAWN BY P. RICHARDSON
REVIEWED BY B. MOORE

COPYRIGHT 2016 BY ANDERSON PERRY & ASSOC., INC.

THIS DRAWING HAS BEEN REDUCED 50%. ADJUST SCALE ACCORDINGLY. BARSCALE SHOWN IS ACCURATE.

PRELIMINARY

anderson perry & associates, inc.
engineering - surveying - natural resources
LA GRANDE, OR. WALLA WALLA, WA. PRINEVILLE, OR.

BAKER VALLEY SOIL AND WATER CONSERVATION DISTRICT

POWDER VALLEY CONNECTOR

MISCELLANEOUS WATER DETAILS I

SHEET 13

Q:\BAKERVALLEY_SWCD\99-14_PowderValleyConnector\DRAFTING\PLOT FILES\060-DSN\99-14-060C-503DET.dwg, MISC DET, 1/8/2016 3:49:21 PM, prichardson

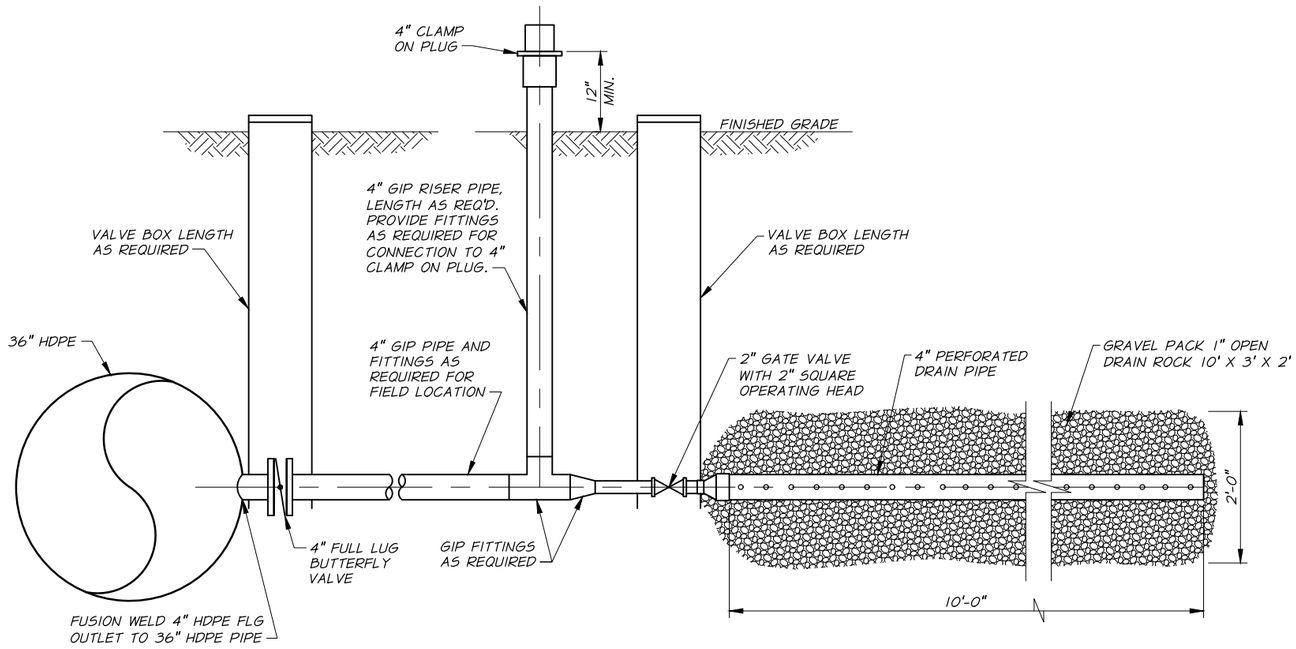

PIPE DRAIN / PUMPOUT DETAIL

N.T.S.

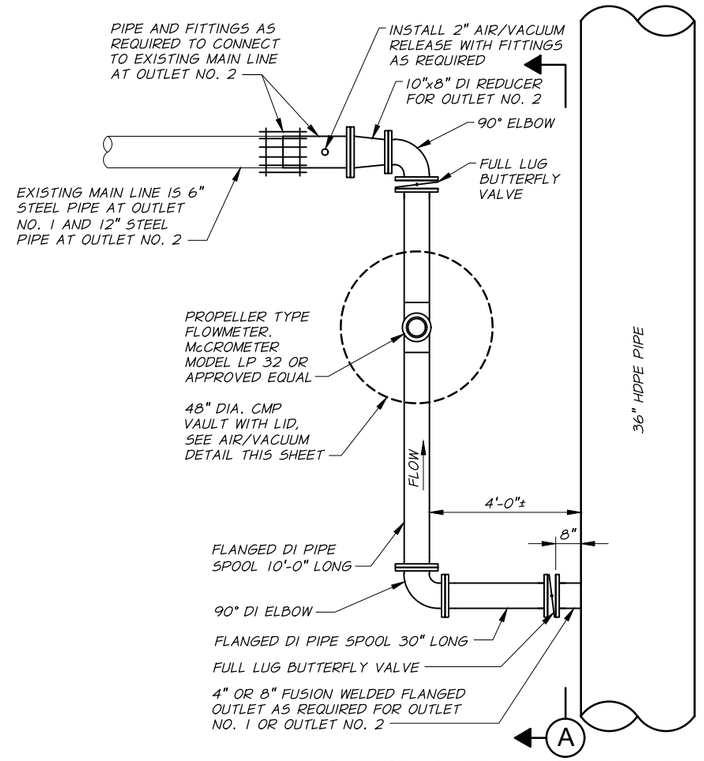

NOTE:
4" FLOWMETER, PIPE, AND FITTINGS FOR OUTLET NO. 1 AND 8" FLOWMETER, PIPE, AND FITTINGS FOR OUTLET NO. 2.

IRRIGATION OUTLET ASSEMBLY

N.T.S.

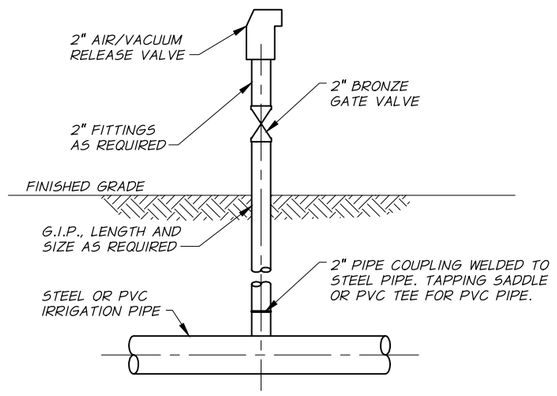

AIR/VACUUM RELEASE DETAIL FOR IRRIGATION OUTLET

N.T.S.

NOTE:
FLOWMETER INSTALLATION TO BE AS REQUIRED PER MANUFACTURER'S RECOMMENDATIONS. DETAILS ARE TO BE USED AS GUIDE FOR INSTALLATION OF THE FLOWMETER.

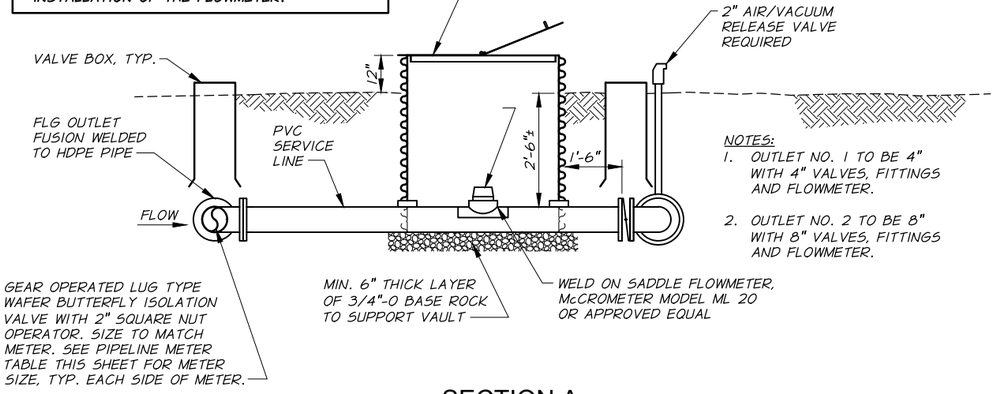

NOTES:
1. OUTLET NO. 1 TO BE 4" WITH 4" VALVES, FITTINGS AND FLOWMETER.
2. OUTLET NO. 2 TO BE 8" WITH 8" VALVES, FITTINGS AND FLOWMETER.

SECTION A
IRRIGATION OUTLET

N.T.S.

REVISION	BY	DATE
DESIGNED BY L. UMPLEBY		
DRAWN BY P. RICHARDSON		
REVIEWED BY B. MOORE		

HORZ. SCALE NO SCALE | VERT. SCALE
JOB NUMBER 99-14 | DATE 2016
ACAD FILE: 99-14-060C-508DET.dwg

COPYRIGHT 2016 BY ANDERSON PERRY & ASSOC., INC.

THIS DRAWING HAS BEEN REDUCED 50%. ADJUST SCALE ACCORDINGLY. BARSCALE SHOWN IS ACCURATE.

PRELIMINARY

anderson perry & associates, inc.
engineering - surveying - natural resources
LA GRANDE, OR. WALLA WALLA, WA. PRINEVILLE, OR.

BAKER VALLEY SOIL AND WATER CONSERVATION DISTRICT

POWDER VALLEY CONNECTOR

MISCELLANEOUS WATER DETAILS II

SHEET 14

Q:\BAKERVALLEY_SWCD\99-14_PowderValleyConnector\DRAFTING\PLOT FILES\060-DSN\99-14-060C-508DET.dwg, MISC DET, 1/8/2016 3:50:38 PM, prichardson

NOTES:

1. CONTRACTOR TO CAREFULLY REMOVE ROTARY SCREENS AND ELECTRICAL EQUIPMENT AND RETURN TO OWNER.
2. ALL SLIDE GATES SHALL BE REMOVED IN GOOD CONDITION AND RETURNED TO OWNER.
3. 36" AND 10" STEEL PIPES ARE TO BE DISCONNECTED AT THE EXISTING FLANGES.
4. 6" GIP VENT PIPE TO BE REMOVED AND RETURNED TO OWNER.
5. AFTER ALL APPURTENANCES HAVE BEEN REMOVED FROM THE INLET STRUCTURE, THE CONCRETE STRUCTURE IS TO BE REMOVED AND DISPOSED OF OFF-SITE.

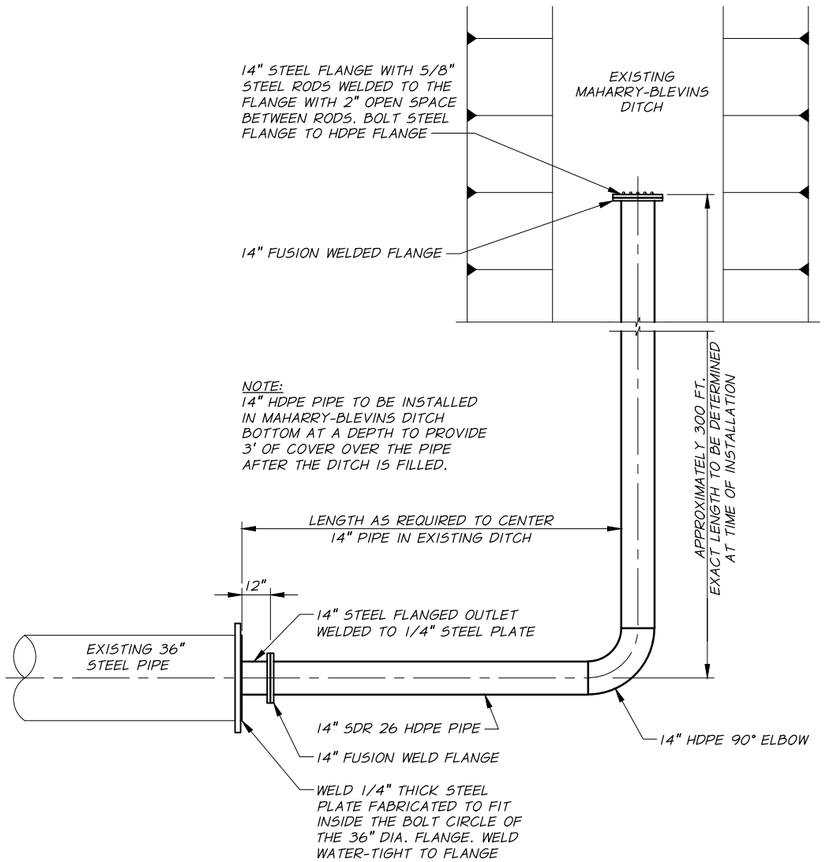

MAHARRY-BLEVINS OUTLET DETAIL

3/8"=1'-0"

NOTE:
REMAINING 10" AND 14" STEEL PIPE TO BE ABANDONED IN PLACE. FILL END OF PIPES WITH CONCRETE PLUG.

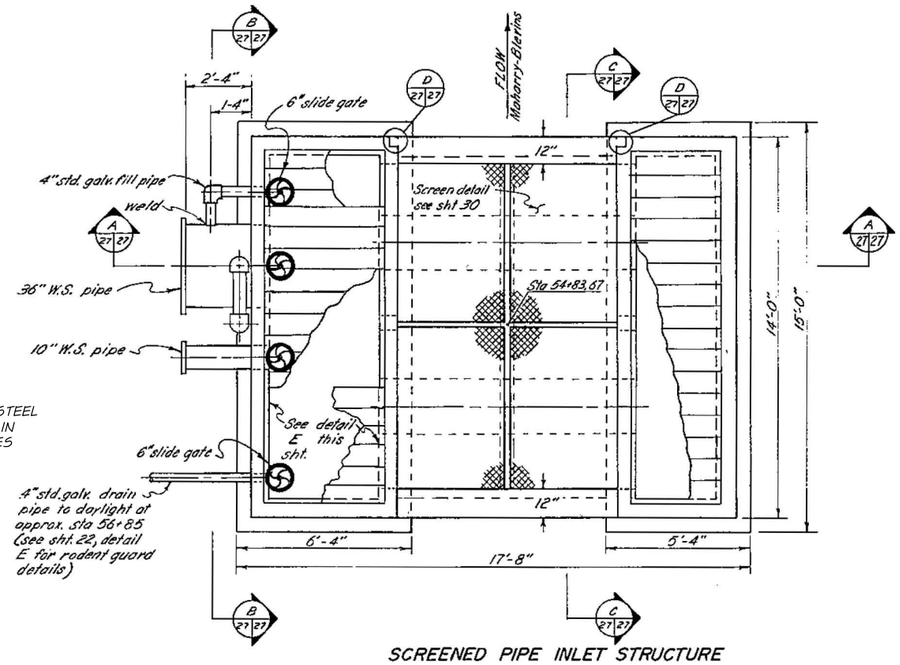

SCREENED PIPE INLET STRUCTURE
FOR P-2 PIPELINE STA. 54 + 83.67

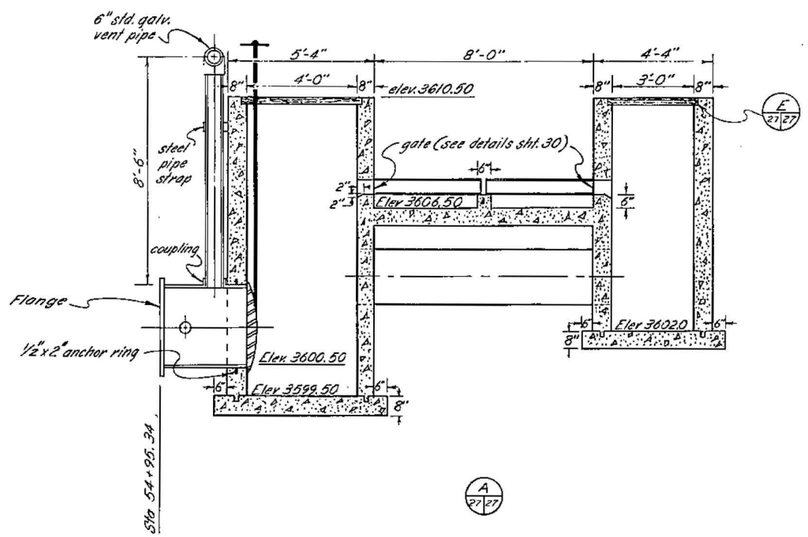

ORIGINAL PIPE INLET STRUCTURE DRAWINGS

(U.S. DEPARTMENT OF AGRICULTURE SOIL CONSERVATION SERVICE)

REVISION	BY	DATE

SCALE IN FEET: 2 0 2 4 8

DESIGNED BY	L. UMPLEBY	HORZ. SCALE	NO SCALE
DRAWN BY	P. RICHARDSON	VERT. SCALE	
REVIEWED BY	B. MOORE	JOB NUMBER	99-14
		DATE	2016
		ACAD FILE:	99-14-060C-509DET.dwg

COPYRIGHT 2016 BY ANDERSON PERRY & ASSOC., INC.

THIS DRAWING HAS BEEN REDUCED 50%. ADJUST SCALE ACCORDINGLY. BARSCALE SHOWN IS ACCURATE.

PRELIMINARY

anderson perry & associates, inc.
engineering · surveying · natural resources
LA GRANDE, OR. WALLA WALLA, WA. PRINEVILLE, OR.

BAKER VALLEY SOIL AND WATER CONSERVATION DISTRICT

POWDER VALLEY CONNECTOR

MISCELLANEOUS WATER DETAILS III

SHEET 15

Q:\BAKERVALLEY_SWCD\99-14_PowderValleyConnector\DRAFTING\PLOT FILES\060-DSN\99-14-060C-509DET.dwg, MISC DET, 1/8/2016 3:51:35 PM, prichardson

THRUST BLOCK NOTES

1. THRUST BLOCKS SHALL BE REQUIRED AT THE FOLLOWING LOCATIONS:
   A. ALL CHANGES IN DIRECTION.
   B. ALL DEAD-ENDS.
   C. WHEN REDUCERS ARE INSTALLED.
   D. ALL VALVES 8-INCHES AND LARGER SHALL BE SIZED FOR CLOSED CONDITION EXCEPTIONS:
      (1) WHEN RESTRAINED JOINT PIPE IS USED ON BOTH SIDES OF VALVE.
      (2) WHEN VALVE IS RESTRAINED JOINT CONNECTED TO A FITTING WHICH HAS APPROPRIATE THRUST BLOCKING.
   E. AT LOCATIONS SPECIFICALLY CALLED OUT ON THE DRAWINGS.
   F. AT TEMPORARY DEAD ENDS DURING PIPE INSTALLATION AS REQUIRED FOR TEMPORARY PRESSURE TESTING.
   G. AT OTHER LOCATIONS REQUIRED BY THE ENGINEER.
2. THRUST BLOCKS SHALL BE SIZED AS REQUIRED BY SOIL CONDITIONS AND DESIGN PRESSURE.
3. PLACE CONCRETE AGAINST UNDISTURBED TRENCH WALL.
4. CONCRETE SHALL BE 2,500 PSI MINIMUM.
5. ALL CONCRETE SHALL BE PLACED SO THAT PIPE, FITTING JOINTS, BOLTS AND NUTS, ETC., WILL BE ACCESSIBLE FOR REPAIRS.
6. PLACE ONE LAYER OF VISQUEEN BETWEEN FITTING AND CONCRETE TO FACILITATE FUTURE REMOVAL OF THRUST BLOCK IF REQUIRED.
7. ANCHOR RODS SHALL BE 3/4" DIAMETER GALVANIZED STEEL RODS OR #6 EPOXY COATED REINFORCEMENT BAR, AASHTO M284, HAVING AN 18" MINIMUM EMBEDMENT IN CONCRETE.
8. ALL THRUST BLOCKS SHALL BE SIZED FOR 80 PSI PRESSURE.
9. IF THE REQUIRED BEARING AREA IS LESS THAN 1 SQUARE FOOT, A THRUST BLOCK SHALL NOT BE REQUIRED.

DETERMINATION OF THRUST BLOCK BEARING AREA

NOTE:
WHEN THRUST BLOCK BEARING AREA IS NOT SPECIFIED ON THE PLANS OR DETERMINED BY THE ENGINEER, THE FOLLOWING PROCEDURE SHALL BE USED TO DETERMINE REQUIRED BEARING AREA.

1. DETERMINE THRUST (T) FOR TYPE OF FITTING OR JOINT AND SIZE OF PIPE FROM TABLE NO. 1 OR TABLE NO. 2.
2. DETERMINE ADJUSTMENT FACTOR (F) FROM TABLE NO. 3 IF DESIGN PRESSURE IF DIFFERENT THAN 150 PSI.
3. DETERMINE BEARING CAPACITY (B) OF SOIL FROM TABLE NO. 4.
4. DETERMINE REQUIRED BEARING AREA (A) AS FOLLOWS:
   $A = (T \times F)/B$
   EXAMPLE: DESIGN PRESSURE = 200 PSI
   PIPE = 10"
   FITTING = TEE
   SOIL - SANDY GRAVEL

   FROM TABLE NO. 1: T = 15,660 LB.

   FROM TABLE NO. 3: F = 1.33

   FROM TABLE NO. 4: B = 3000 LB/SQ.FT.

   $A = \frac{15{,}660 \times 1.33}{3{,}000} = 6.9$ SQ.FT. = 7 SQ.FT. (ROUND UP TO NEAREST WHOLE SQ.FT.)

TABLE NO. 1

THRUST AT FITTINGS IN POUNDS AT 150 PSI OF DESIGN PRESSURE

PIPE SIZE	TEES AND DEAD ENDS	90° BEND	45° BEND	22 1/2° BEND	11 1/4° BEND
4"	2,520	3,470	1,940	990	510
6"	5,660	7,980	4,340	2,220	1,130
8"	10,040	14,190	7,680	3,930	1,980
10"	15,660	22,170	12,020	6,140	3,080
12"	22,580	31,920	17,280	8,820	4,440
14"	30,740	43,440	23,520	12,000	6,030
16"	40,125	56,750	30,710	15,660	7,890
18"	50,775	71,810	38,870	19,820	9,960
20"	62,690	88,635	47,970	24,470	12,290
24"	90,260	127,650	69,090	35,240	17,700

TABLE NO. 2

SIDE THRUST PER 150 LB./SQ.IN. PRESSURE PER DEGREE OF DEFLECTION

PIPE SIZE	SIDE THRUST-LB	PIPE SIZE	SIDE THRUST-LB
4"	N/A	14"	540
6"	N/A	16"	700
8"	170	18"	900
10"	270	20"	1,100
12"	390	24"	1,575

MULTIPLY THRUST BY DEGREE OF DEFLECTION TO OBTAIN TOTAL THRUST

TABLE NO. 3

DESIGN PRESSURE (1)	ADJUSTMENT FACTOR (F) FOR DESIGN PRESSURE DIFFERENT THAN 150 PSI
50	0.33
75	0.50
100	0.67
125	0.83
150	1.00
200	1.33
250	1.67

(1) OTHER DESIGN PRESSURE CONTACT ENGINEER

TABLE NO. 4

SOIL	SAFE BEARING LOAD LB/SQ.FT.
SOFT CLAY	500
SILT	1,000
SAND	2,000
SAND AND GRAVEL	3,000
SAND AND GRAVEL CEMENTED WITH CLAY	4,000
HARD CLAY	4,000

SEE SHEET 17 FOR ADDITIONAL THRUST BLOCK REQUIREMENTS

REVISION	BY	DATE

DESIGNED BY L. UMPLEBY
DRAWN BY P. RICHARDSON
REVIEWED BY B. MOORE

HORZ. SCALE NO SCALE | VERT. SCALE
JOB NUMBER 99-14 | DATE 2016
ACAD FILE: 99-14-060C-504DET.dwg

COPYRIGHT 2016 BY ANDERSON PERRY & ASSOC., INC.

THIS DRAWING HAS BEEN REDUCED 50%.
ADJUST SCALE ACCORDINGLY.
BARSCALE SHOWN IS ACCURATE.

PRELIMINARY

anderson perry & associates, inc.
engineering · surveying · natural resources
LA GRANDE, OR. WALLA WALLA, WA. PRINEVILLE, OR.

BAKER VALLEY SOIL AND WATER CONSERVATION DISTRICT
POWDER VALLEY CONNECTOR

THRUST BLOCK DETAILS I

SHEET 16

Q:\BAKERVALLEY_SWCD\99-14_PowderValleyConnector\DRAFTING\PLOT FILES\060-DSN\99-14-060C-504DET.dwg, MISC DET, 1/8/2016 3:52:49 PM, prichardson

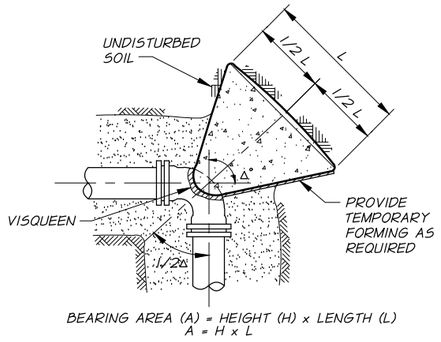

PLAN

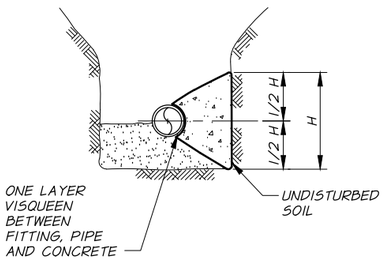

SECTION

TYPICAL THRUST BLOCK DETAILS

N.T.S.

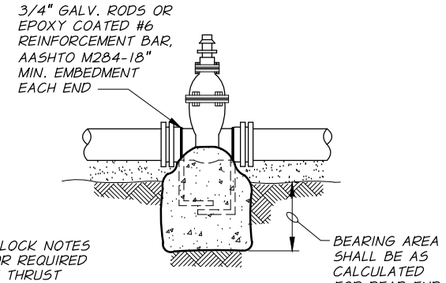

NOTE:
SEE THRUST BLOCK NOTES THIS SHEET FOR REQUIRED LOCATIONS OF THRUST BLOCKS FOR VALVES.

TYPICAL VALVE THRUST BLOCK

N.T.S.

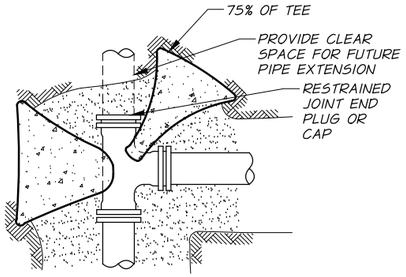

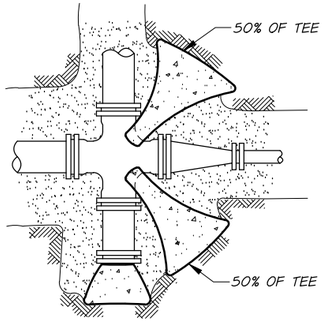

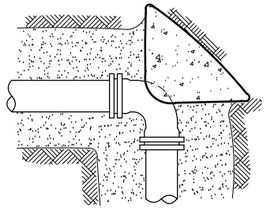

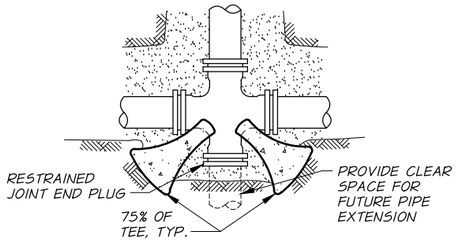

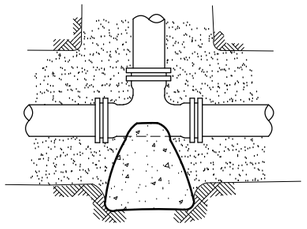

TYPICAL THRUST BLOCK LOCATIONS

PLAN VIEWS
N.T.S.

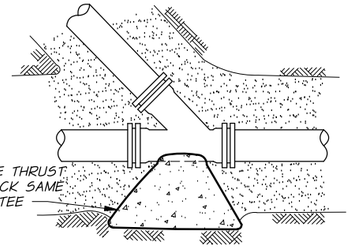

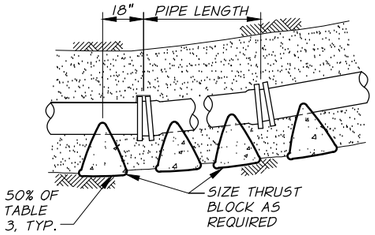

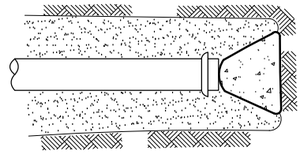

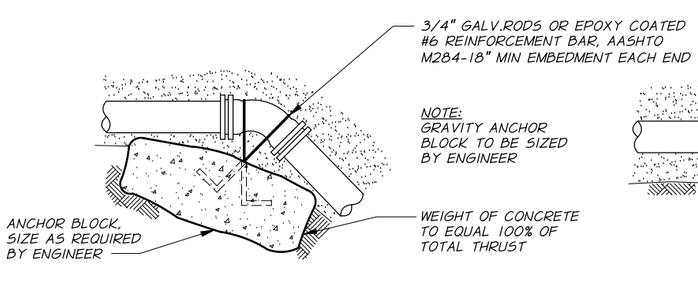

TYPICAL ANCHOR BLOCKS

SECTIONS
N.T.S.

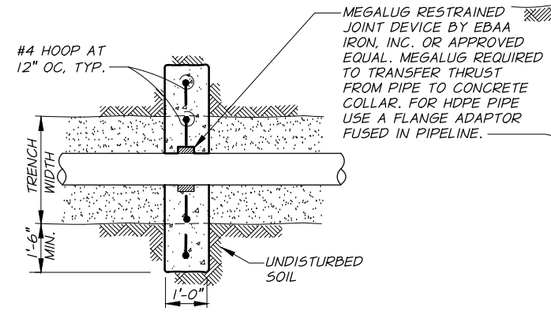

TYPICAL ANCHOR BLOCKS

ANCHOR COLLAR
N.T.S.

SEE SHEET 16 FOR ADDITIONAL THRUST BLOCK REQUIREMENTS

REVISION	BY	DATE

DESIGNED BY L. UMPLEBY
DRAWN BY P. RICHARDSON
REVIEWED BY B. MOORE

HORZ. SCALE NO SCALE | VERT. SCALE
JOB NUMBER 99-14 | DATE 2016
ACAD FILE: 99-14-060C-505DET.dwg

COPYRIGHT 2016 BY ANDERSON PERRY & ASSOC., INC.

THIS DRAWING HAS BEEN REDUCED 50%. ADJUST SCALE ACCORDINGLY. BARSCALE SHOWN IS ACCURATE.

PRELIMINARY

anderson perry & associates, inc.
engineering · surveying · natural resources
LA GRANDE, OR. WALLA WALLA, WA. PRINEVILLE, OR.

BAKER VALLEY SOIL AND WATER CONSERVATION DISTRICT
POWDER VALLEY CONNECTOR
THRUST BLOCK DETAILS II

SHEET 17

Q:\BAKERVALLEY_SWCD\99-14_PowderValleyConnector\DRAFTING\PLOT FILES\060-DSN\99-14-060C-505DET.dwg, MISC DET, 1/8/2016 3:53:35 PM, prichardson