REV.	DATE	DESCRIPTION

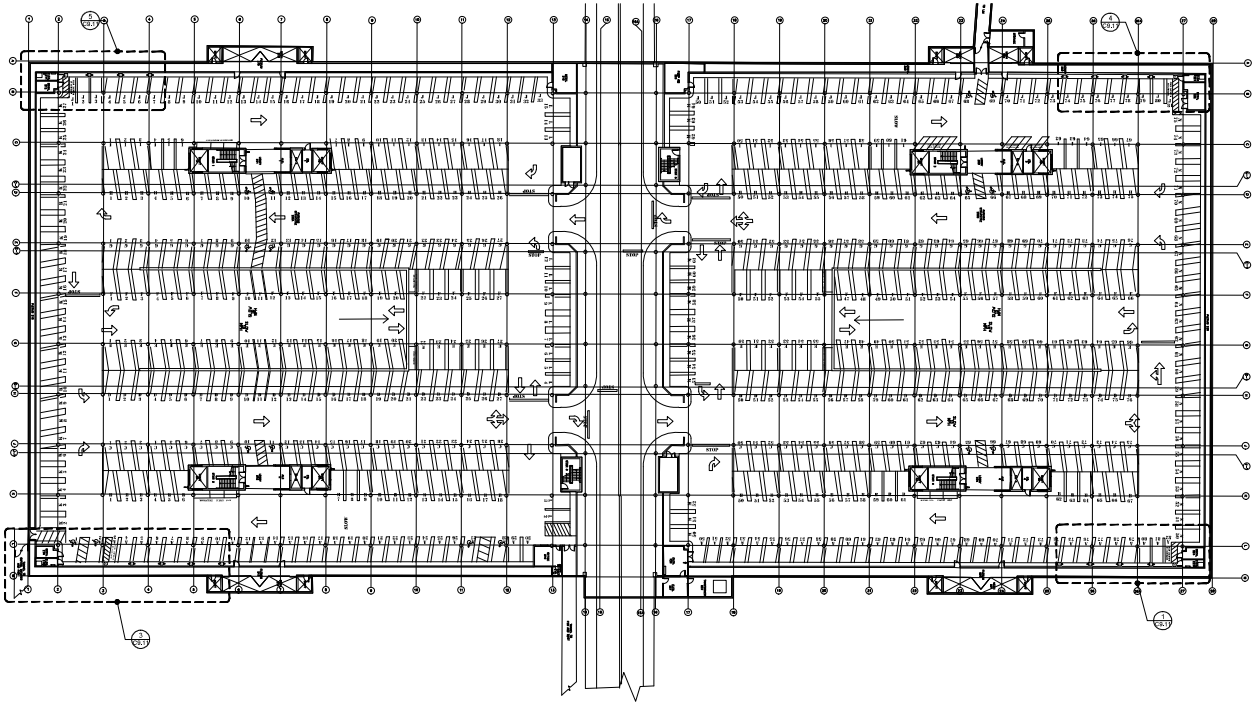

OVERALL PLAN
1" = 30'-0"

(PLAN IS TO SCALE IF BAR MEASURES 2")

KEYED NOTES:

1. INSTALL PUBLIC EV SIGNAGE ON PER DETAILS 14, 16 ON C0.51. MOUNT ON EXISTING WALL WITH (2) 1/4" CONCRETE SCREWS PER SIGN.
2. INSTALL STATE VEHICLE EV SIGNAGE PER DETAILS 15, 16 ON C0.51. MOUNT ON EXISTING WALL WITH (2) 1/4" CONCRETE SCREWS PER SIGN.
3. PAINT – LETTERING PER DETAIL 8 ON C0.51.
4. REMAINT STALL NUMBERS TO MATCH EXISTING CONFIGURATION. FIELD VERIFY LOCATION WITH OWNER AS NEEDED.
5. PAINT – SOLID WHITE LINES, 4" WIDE, BOUNDARY LINES WITH STRIPES ANGLED 36 DEG. SPACED 2' O.C.

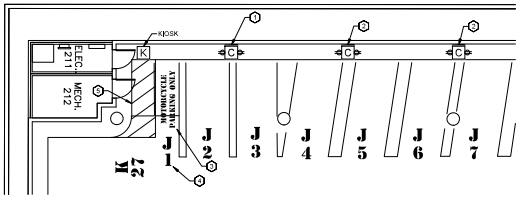

5 C9.11 ENLARGED PLAN - SW CORNER
1/8" = 1'-0"

(PLAN IS TO SCALE IF BAR MEASURES 2")

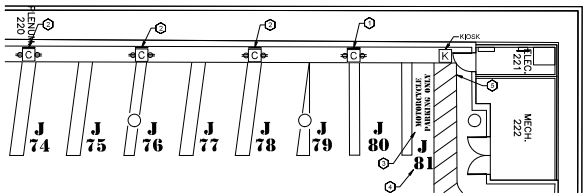

4 C9.11 ENLARGED PLAN - NW CORNER
1/8" = 1'-0"

(PLAN IS TO SCALE IF BAR MEASURES 2")

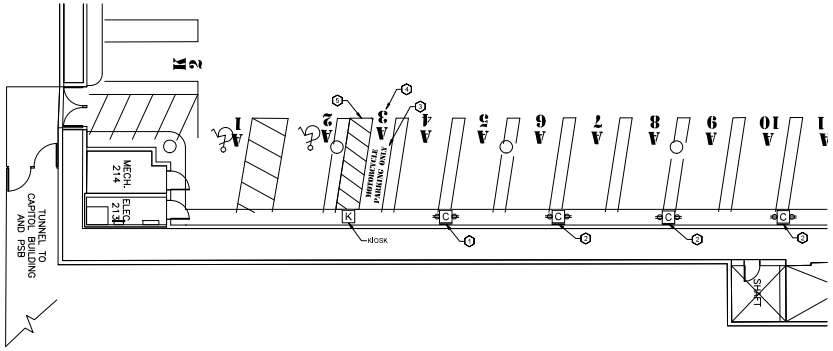

3 C9.11 ENLARGED PLAN - SE CORNER
1/8" = 1'-0"

(PLAN IS TO SCALE IF BAR MEASURES 2")

2 C9.11 NOT USED
1/8" = 1'-0"

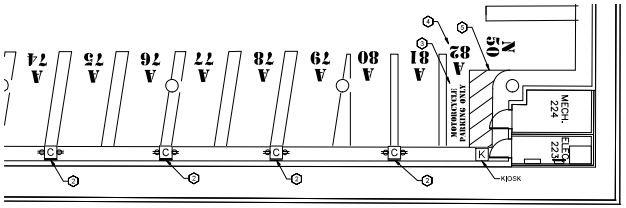

1 C9.11 ENLARGED PLAN - NE CORNER
1/8" = 1'-0"

(PLAN IS TO SCALE IF BAR MEASURES 2")

REGISTERED PROFESSIONAL ENGINEER
16,650
DIGITAL SIGNATURE
OREGON
JULY 20, 1995
GREG D. LOCKE
EXPIRES: 12-31-2022

DIGITAL SIGNATURE: Electronic version of this document is a digital signature and shall be treated as an original signature. Contact Engineer of Record for a hard copy. Hard copy of document is required as authenticity is in question.

Drawings produced by this engineer are instruments of service for this project only and are the property of this engineer. Unauthorized use and reproduction of these drawings and specifications on any other project without the prior written permission of this engineer shall be at the user's sole risk. User agrees to defend, indemnify and hold this engineer harmless from all claims, damages, and expenses including attorney's fees and costs arising out of or in connection with such reuse. Engineer is not responsible for the unauthorized use of these drawings. All information and results reported in the engineer's memorandum,

Locke CIVIL & STRUCTURAL ENGINEERS
289 E Ellendale Ave, Suite 703
Dallas, Oregon 97338
503.364.8207 LockeEngineers.com

CONFORMED SET - 04 OCT 2022

OREGON DEPT. OF ADMINISTRATIVE SERVICES
PARKING LOT UPGRADE PROJECT
CAPITOL MALL PARKING STRUCTURE
900 CHEMEKETA STREET NE, SALEM, OREGON

OVERALL AND ENLARGED PLANS

JOB NO.	20005-1
DATE	APRIL 4, 2022
DESIGN BY	GL
CHECKED BY	GL
SHEET	C9.11

02-06-2023 1:42 PM
U:\2000\20005-1 DAS - Heat Pumping Upgrades Project\Cad\Project #1 - MallPark\Capitol Mall Parking Structure - 20-0200\20-1 CAPITOL MALL - R1 - CIVIL PLANS.dwg