COMPANY NORTHWEST NATURAL GAS
WELL IW 13B-23-65
FIELD MIST (SCHLICKER POOL STORAGE)
COUNTY COLUMBIA STATE OR

HALLIBURTON

EXCELL 2000

SPECTRAL DENSITY
DUAL SPACED NEUTRON
GAMMA

5"=100'

COMPANY NORTHWEST NATURAL GAS
WELL IW 13B-23-65
FIELD MIST (SCHLICKER POOL STORAGE)
COUNTY COLUMBIA STATE OR

API No. 36-009-00357
Location 438.73' WEST AND
2424.34' SOUTH FROM
THE NORTHEAST CORNER
OF SECTION 22. WB&M
X: 1293755.179
Y: 859503.800
Sect 22 Twp 6N Rge 5W

Other Services
HRI/BCS/FIAC
EMI

Permanent Datum G.L. Elev 759.4'
Log measured from K.B. , 19.0 ft. above perm. datum
Drilling measured from K.B.

Elev.: K.B. 778.4'
D.F. ------
G.L. 759.4'

Date	09-29-2004			
Run No.	ONE			
Depth – Driller	2234'			
Depth – Logger	2234'			
Bottom – Logged Interval	2231'			
Top – Logged Interval	441'			
Casing – Driller	13.4" @ 442'	@	@	@
Casing – Logger	441'			
Bit Size	8.750"			
Type Fluid in Hole	GEL			
Dens. | Visc.	9.3 | 42	|	|	|
Ph | Fluid Loss	9.5 | 6.8	|	|	|
Source of Sample	FLOWLINE			
Rm @ Meas. Temp.	1.170 @ 66 F	@	@	@
Rmf @ Meas. Temp.	1.460 @ 61 F	@	@	@
Rmc @ Meas. Temp.	.820 @ 64 F	@	@	@
Source Rmf | Rmc	MEAS | MEAS	|	|	|
Rm @ BHT	0.748 @ 107 F	@	@	@
Time Since Circ.	2000 09-28			
Time on Bottom	0600 09-29			
Max. Rec. Temp.	107 F @ TD	@	@	@
Equip. | Location	49599 | WDLD	|	|	|
Recorded By	G. ROUSSEAU			
Witnessed By	J. MEYERS	E. VADER		

Fold Here

Service Ticket No 3310704 API Serial No 36-009-00357 PGM Version XL v5.0

CHANGE IN MUD TYPE OR ADDITIONAL SAMPLES		
Date | Sample No.		
Depth – Driller		
Type Fluid in Hole		
Dens. | Visc.	|	|
Ph | Fluid Loss	|	|
Source of Sample		
Rm @ Meas. Temp.	1.170 @ 66 F	@
Rmf @ Meas. Temp.	1.460 @ 61 F	@
Rmc @ Meas. Temp.	.820 @ 64 F	@
Source Rmf | Rmc	MEAS | MEAS	|
Rm @ BHT	0.748 @ 107 F	@
Rmf @ BHT	0.870 @ 107 F	@
Rmc @ BHT	0.510 @ 107 F	@

RESISTIVITY SCALE CHANGES

Type Log	Depth	Scale Up Hole	Scale Down Hole

RESISTIVITY EQUIPMENT DATA

Run No.	Tool Type & No.	Pad Type	Tool Pos.	Other

EQUIPMENT DATA

GAMMA		ACOUSTIC		DENSITY		NEUTRON	
Run No.	ONE	Run No.		Run No.	ONE	Run No.	ONE
Serial No.	A180	Serial No.		Serial No.	1741M741	Serial No.	005
Model No.	NGRT	Model No.		Model No.	SDLT-DA	Model No.	DSNT-X
Diameter	3.625"	No. of Cent.		Diameter	5.500"	Diameter	3.625"
Detector Model No.	432	Spacing		Log Type	GAM-GAM	Log Type	NEU-NEU
Type	SCINT.			Source Type	CS137	Source Type	AM241BE
Length	4.00"	LSA [Y / N]	NO	Serial No.	2694 GW	Serial No.	DSN-16
Distance to Source	8.0'	FWDA [Y / N]	NO	Strength	1.5 CI	Strength	18.5 CI

LOGGING DATA

GENERAL				GAMMA		ACOUSTIC			DENSITY			NEUTRON		
Run	Depth		Speed	Scale		Scale			Scale			Scale		
No.	From	To	Ft / Min	L	R	L	R	Matrix	L	R	Matrix	L	R	Matrix
ONE	2234'	411'	40	0	150				1.65	2.65	2.65	.60	0	SAND
				API	API		C		GMCC	GMCC	GMCC	%	%	

DIRECTIONAL INFORMATION

Maximum Deviation	54.32	deg. @	1755'	KOP	192'

Remarks:

SDLT-DSNT-NGRT RUN IN COMBINATION.

CREW: D. ROSENSTEEL, D. BRIGHT, K. CHAN. RIG: TAYLOR DRILLING NO. 9.

HALLIBURTON DOES NOT GUARANTEE THE ACCURACY OF ANY INTERPRETATION OF THE LOG DATA, CONVERSION OF LOG DATA TO PHYSICAL ROCK PARAMETERS OR RECOMMENDATIONS WHICH MAY BE GIVEN BY HALLIBURTON PERSONNEL OR WHICH APPEAR ON THE LOG OR IN ANY OTHER FORM. ANY USER OF SUCH DATA, INTERPRETATIONS, CONVERSIONS, OR RECOMMENDATIONS AGREES THAT HALLIBURTON IS NOT RESPONSIBLE EXCEPT WHERE DUE TO GROSS NEGLIGENCE OR WILLFUL MISCONDUCT, FOR ANY LOSS, DAMAGES, OR EXPENSES RESULTING FROM THE USE THEREOF.

HALLIBURTON

HALLIBURTON

EXCELL

Version No: 5.0 | hc:3.0
Data File: 0929_0429_s2241.2.cls
Format File: plot_01_1.spc
Plot Time: 2004-09-29 07:29:50
Log Time: 2004-09-29 06:02:37

Top Depth: 353.83
Bottom Depth: 2238.00

GR 0 API 150	**AHV** FT3 →	**NPHI** 60. % 0
CALI 7 INCH 17	**BHV** ← FT3	**RHOB** 1.65 G/CC 2.65
BS 7 INCH 17	**TENS** 10500 500	**DPHI** 60. % 0
	1:240 FT.	**RHOB** -.5 GM CC .5
		PE 12 2

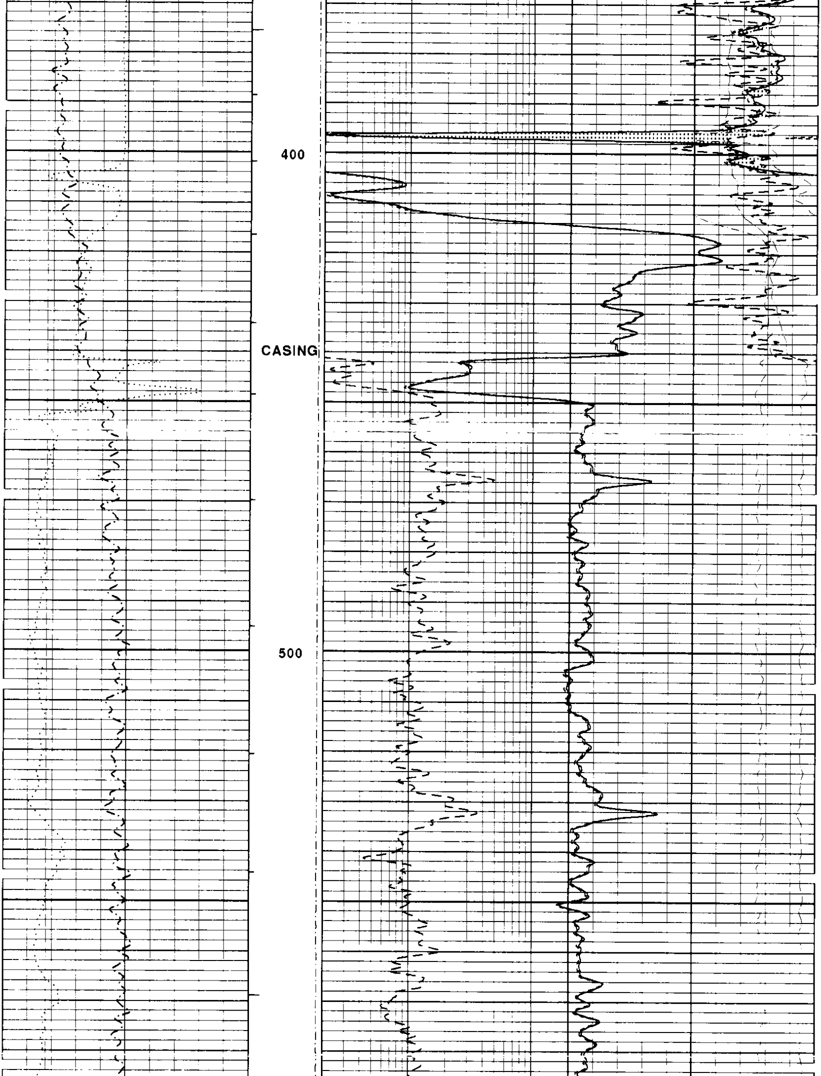

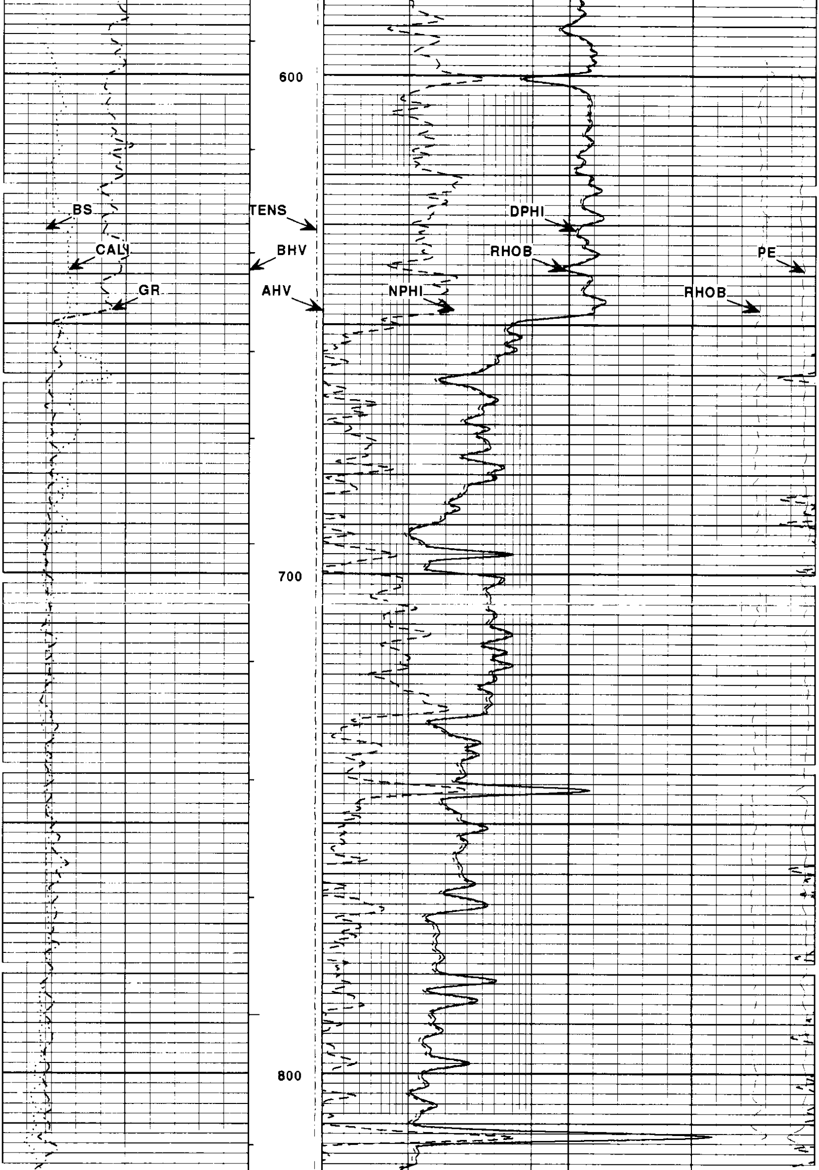

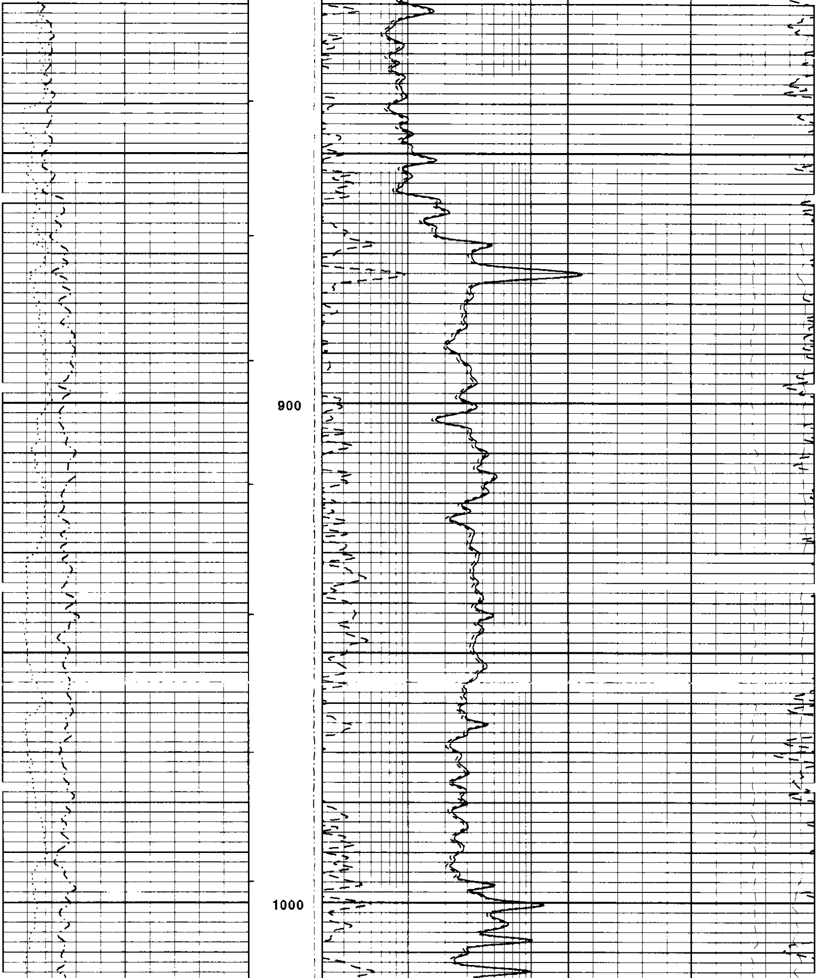

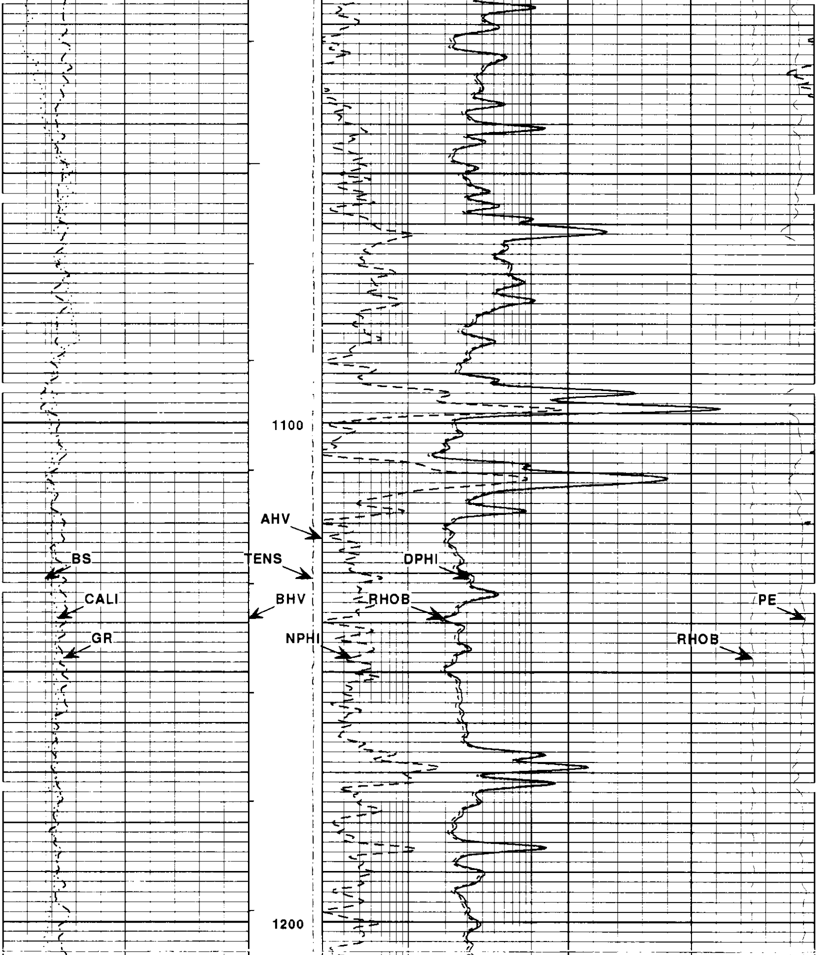

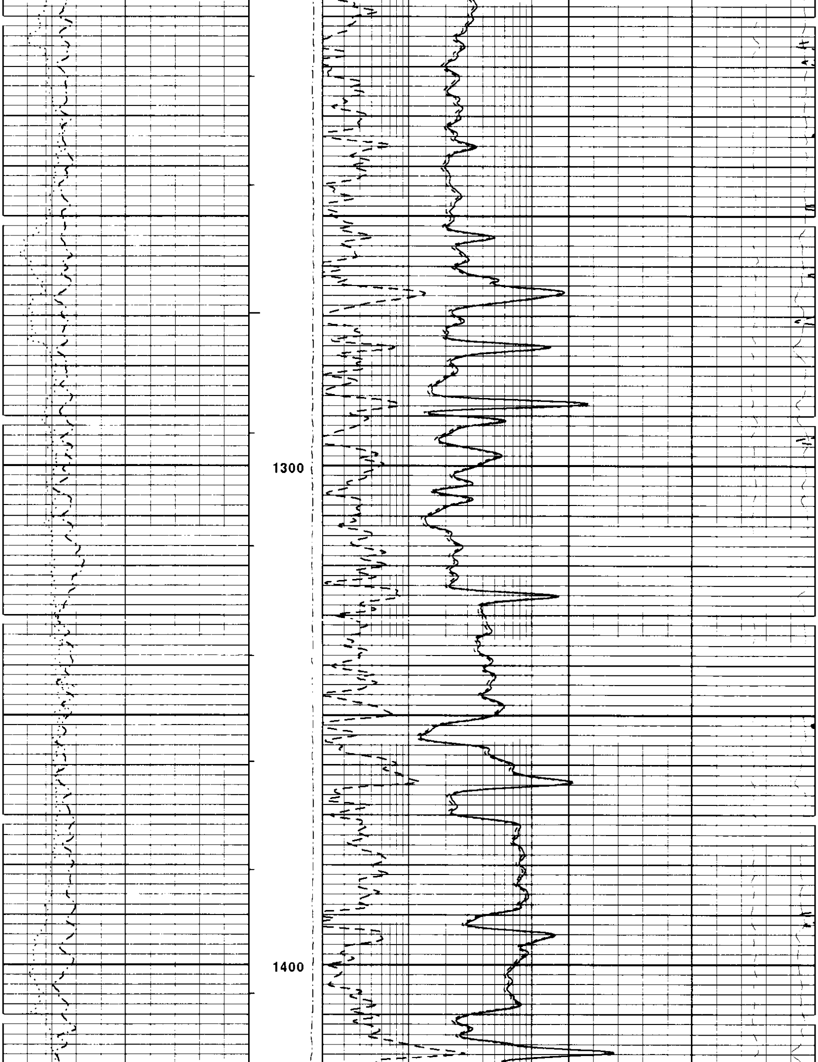

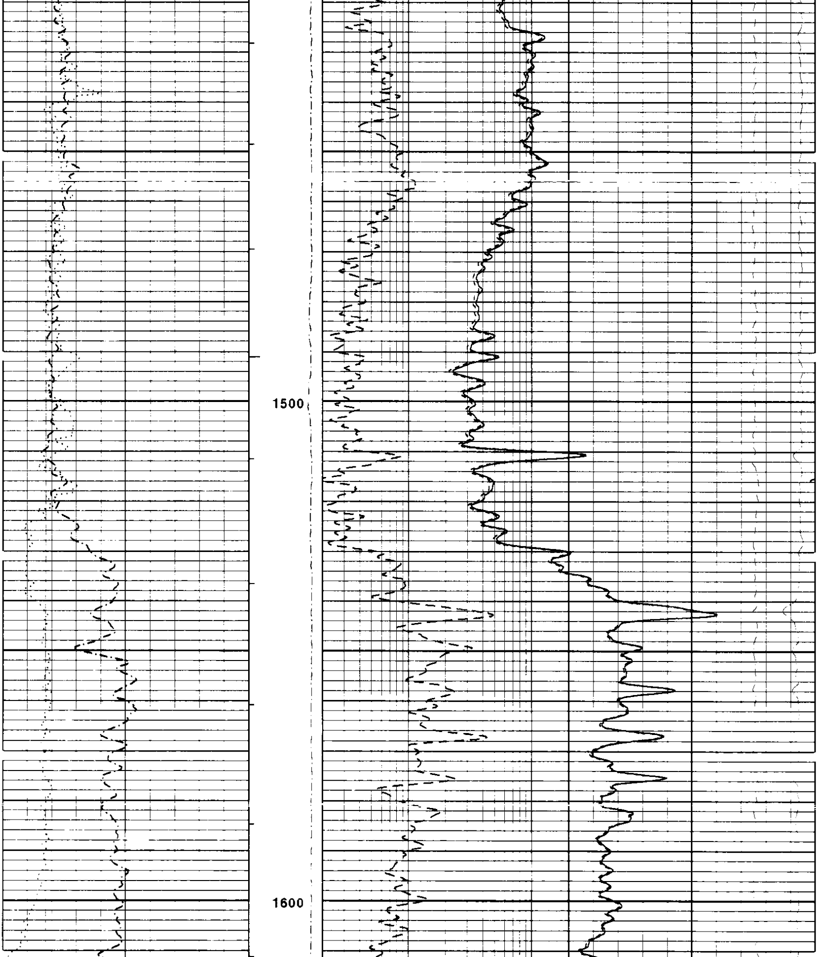

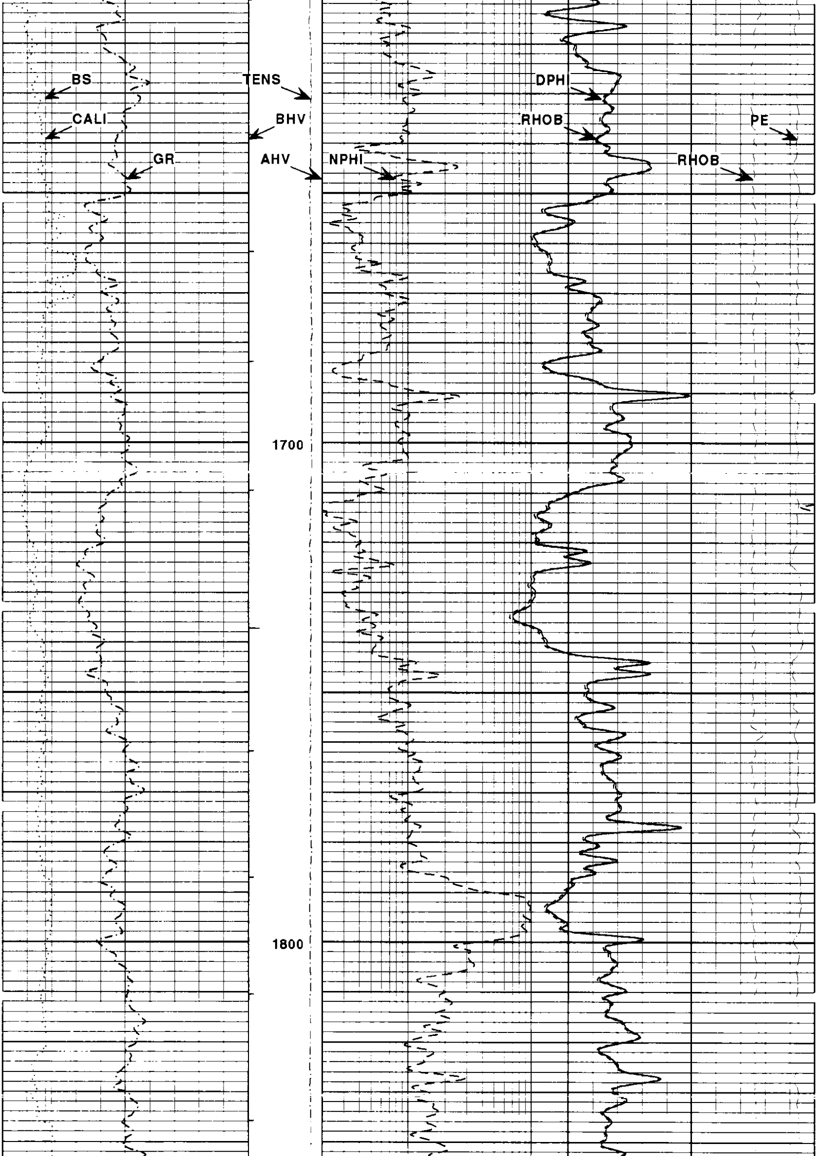

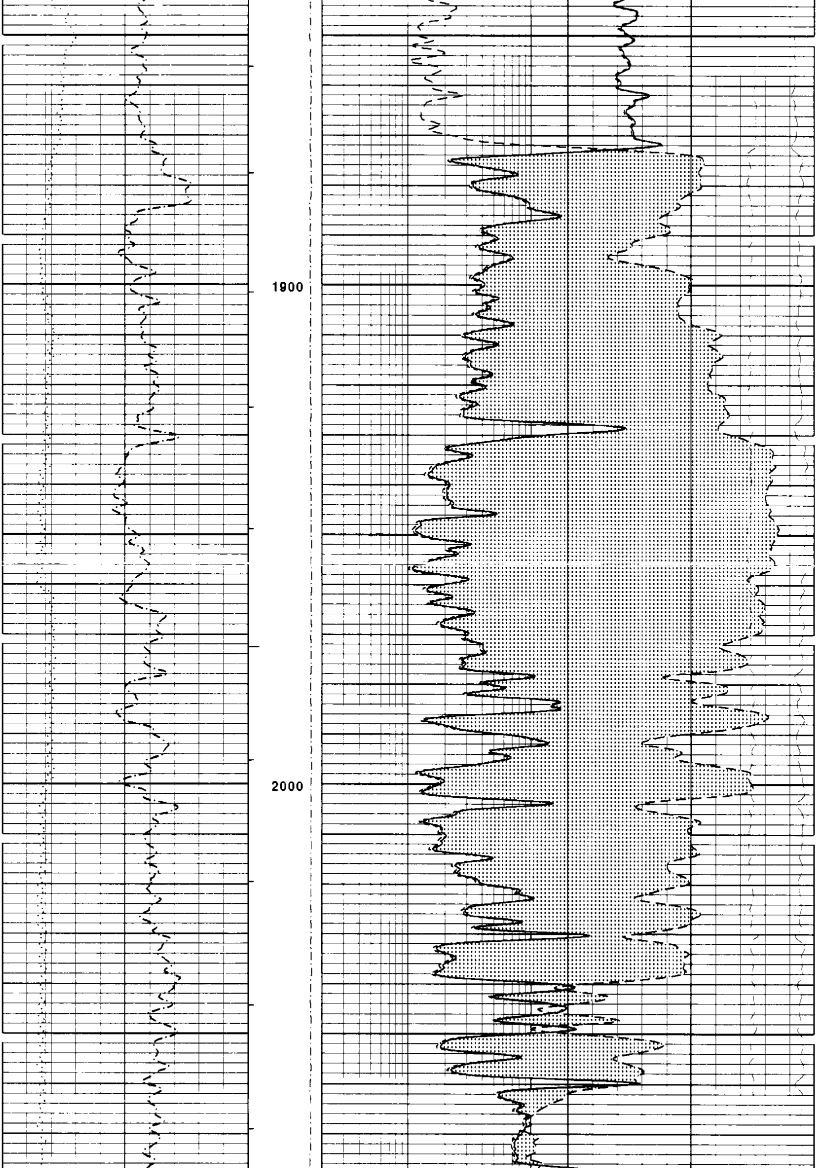

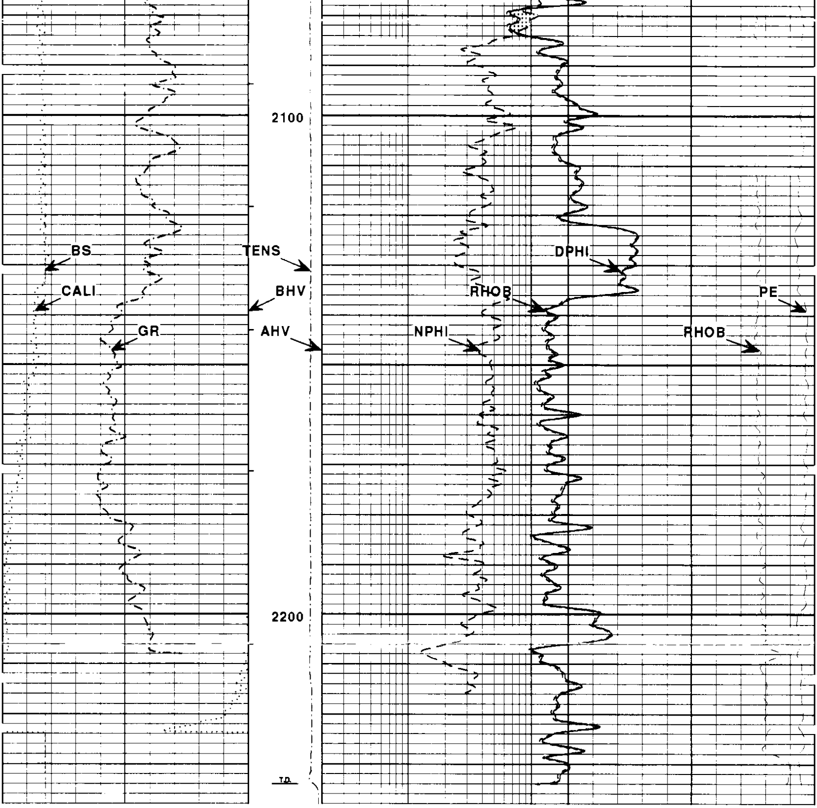

PE
12 2

RHOB
-.5 GM/CC .5

1:240
FT.

BS 7 INCH 17	**TENS** 10500 500	**DPHI** 60. % 0
CALI 7 INCH 17	**BHV** ← FT3	**RHOB** 1.65 G/CC 2.65
GR 0 API 150	**AHV** FT3 →	**NPHI** 60. % 0

HALLIBURTON
EXCELL

Version No: 5.0 | hc:3.0
Data File: 0929_0429_s2241.2.cls
Format File: plot_01_1.spc
Plot Time: 2004-09-29 07:28:24
Log Time: 2004-09-29 06:02:37

Top Depth: 353.83
Bottom Depth: 2238.00

REPEAT SECTION

HALLIBURTON

EXCELL 2000

Version No: 5.0 | hc:3.0
Data File: 0929_0429_s2241.1.cls
Format File: plot_01_1.spc
Plot Time: 2004-09-29 07:28:07
Log Time: 2004-09-29 05:38:08

Top Depth: 393.58
Bottom Depth: 702.25

GR 0 API 150	AHV FT3 →	NPHI 60. % 0
CALI 7 INCH 17	BHV ← FT3	RHOB 1.65 G/CC 2.65
BS 7 INCH 17	TENS 10500 500	DPHI 60. % 0
	1:240 FT.	RHOB -.5 GM/CC .5 PE 12 2

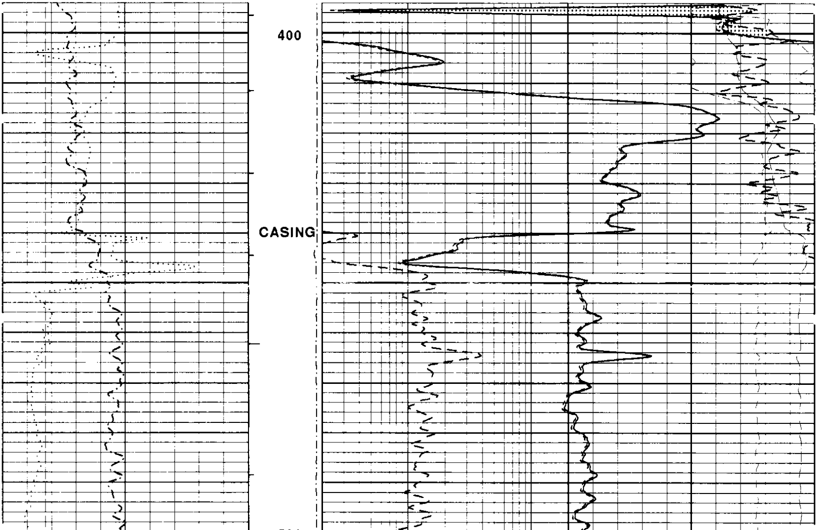

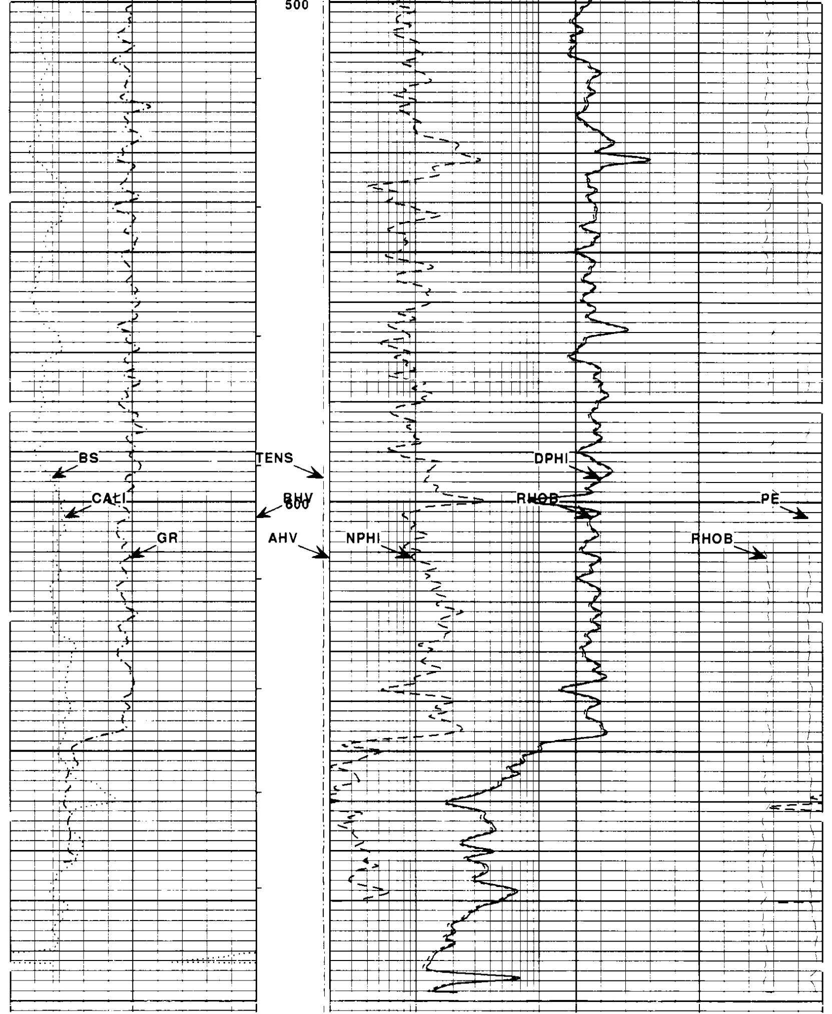

1:240
FT.

Curve	Left	Units	Right
BS	7	INCH	17
CALI	7	INCH	17
GR	0	API	150
TENS	10500		500
BHV	←	FT3	
AHV		FT3	→
DPHI	60.	%	0
RHOB	1.65	G/CC	2.65
NPHI	60.	%	0
PE	12		2
RHOB	-.5	GM/CC	.5

HALLIBURTON

EXCELL

Version No: 5.0 | hc:3.0
Data File: 0929_0429_s2241.1.cls
Format File: plot_01_1.spc
Plot Time: 2004-09-29 07:27:48
Log Time: 2004-09-29 05:38:08
Top Depth: 393.58
Bottom Depth: 702.25

Current EXCELL-2000 Parameter Values
Depth: 94.000
Date: 29-Sep-2004 05:30
Service Number: 2241
Software Version: 5.0

Mnemonic	Tool	Parameter Description	Value	Units
PERF	DITSHD	PERFORATED INTERVAL	NO	
TD	DITSHD	TOTAL DEPTH	0.	FT
CS_ANT	DITSHD	CASING DEPTH (FOR ANNOTATION)	0.	FT
GR_OK	GAMMA	DO GAMMA CALCULATIONS?	YES	
CASED	SHARED	CASED HOLE?	NO	
CASEOD	SHARED	CASING DIAMETER (OD)	9.625	Inches
MUDWT	SHARED	BOREHOLE FLUID WEIGHT	9.3	Pounds/Gal.
GRSO	GAMMA	GAMMA RAY STANDOFF	0.	Inches
BS	SHARED	BIT SIZE	8.75	Inches
DSN_OK	DSNT_X	DO DSNT_X CALCULATIONS?	YES	
DRILL	DSNT_X	TPL - NEUTRON IN SLEEVE?	NO	
BADHOL	DSNT_X	DSNT_X BAD HOLE CORRECTION	NO	
NLITH	DSNT_X	NEUTRON LITHOLOGY	SAND	
DSNSO	DSNT_X	DSNT_X STANDOFF	0.	Inches
DSNTMP	DSNT_X	DSNT_X TEMPERATURE CORRECTION	NONE	
DSNPRS	DSNT_X	DSNTX PRESSURE CORRECTION	NONE	
VLDTMP	DSNT_X	IS DSNT_X TEMPERATURE VALID?	YES	
SDL_OK	SDL_DA	DO SDL CALCULATIONS?	YES	
EVR_OK	SDL_DA	DO SDL EVR CALCULATIONS?	YES	
AIR	SDL_DA	AIR FILLED BOREHOLE?	NO	
LOGB	SDL_DA	LOGGING CAL BLOCKS?	NO	
SDLTC	SDL_DA	SDL TEMPERATURE CORRECTION?	YES	
MUDT	SDL_DA	MUD CORRECTION TYPE?	NONE	
RHOMAT	SDL_DA	MATRIX DENSITY	2.65	Grams/CC
RHOFLU	SDL_DA	FLUID DENSITY	1.	Grams/CC
CAL_OK	CAL_DA	DO CALIPER CALCULATIONS?	YES	
AHVOK	CAL_DA	DO ANNULAR VOLUME CALCULATION?	YES	
MLOGOK	MIC_SD	DO MICRO-LOG CALCULATIONS?	YES	

EXCELL-2000 Calibration Report
Date: 29-Sep-2004 07:23

GAMMA RAY TOOL SHOP CALIBRATION SUMMARY

PERFORMED: 27-Aug-2004 14:30
LAST SHOP CALIBRATION: 20-Jul-2004 12:48
SERIAL NUMBER: A180
MODEL: NGRT-A
BLANKET #: TB-67
TRUCK UNIT NUMBER: 49599
PROGRAM VERSION: 5.0
PERFORMED BY: G. ROUSSEAU

	MEASURED	CALIBRATED	UNITS
BACKGROUND	16	16	GAPI
BACKGROUND+CALIBRATOR	225	221	GAPI
CALIBRATOR	209	205	GAPI
GAPI CONVERSION FACTOR	0.472		GAPI/CPS

GAMMA RAY TOOL BEFORE SURVEY FIELD CHECK SUMMARY

PERFORMED: 29-Sep-2004 01:15 LAST SHOP CALIBRATION: 27-Aug-2004 14:30

	SHOP	FIELD	UNITS
BACKGROUND	16	21	GAPI
BACKGROUND+CALIBRATOR	221	228	GAPI
CALIBRATOR	205	206	GAPI

GAMMA RAY TOOL AFTER SURVEY FIELD CHECK SUMMARY

PERFORMED: 29-Sep-2004 03:35 LAST SHOP CALIBRATION: 27-Aug-2004 14:30

	BEFORE	AFTER	UNITS
BACKGROUND	21	21	GAPI
BACKGROUND+CALIBRATOR	228	225	GAPI
CALIBRATOR	206	204	GAPI

DUAL SPACED NEUTRON--GIBRALTAR SHOP CALIBRATION SUMMARY

PERFORMED: 27-Aug-2004 15:38 LAST SHOP CALIBRATION: 21-Jul-2004 18:45
SERIAL NUMBER: 05 MODEL: DSNT-X
SOURCE NUM: DSN-16
TRUCK UNIT NUMBER: 49599 PROGRAM VERSION: 5.0
PERFORMED BY: G. ROUSSEAU

** NEUTRON CALIBRATION SUMMARY **

CALIBRATION CONSTANTS

	Prev. Value	New Value	Control Limit On New Value
Gain	1.006	1.006	0.90 - 1.10

WATER TANK SUMMARY
(Horizontal Water Tank)

	Current Reading (Previous Coef.)	Calib. (New Coef.)	Change	Control Limit On Change
Porosity	23.81	23.83	0.02	+/- 0.20
Calibrated Ratio	9.762	9.769	0.006	+/- 0.050

Reference value assigned to tank: 52.720

VERIFIER

	Value	Control Limits
Snow-block porosity	5.08	2.0 - 9.0

```
                PASS/FAIL SUMMARY

        Background Check:            PASSED
        Gain-Range Check:            PASSED
        Snow-block Check:            PASSED
```

DUAL SPACED NEUTRON--GIBRALTAR BEFORE SURVEY FIELD CHECK SUMMARY

PERFORMED: 29-Sep-2004 05:05   LAST SHOP CALIBRATION: 27-Aug-2004 15:38

```
                       ** NEUTRON FIELD-CHECK SUMMARY **

                                                          Control Limit
                           Shop     Before    Change       On Change
                          ______    ______    ______     _____________
  Snow-Block Por.(pu)      5.08      5.46      0.38        +/- 1.50

                         PASS/FAIL SUMMARY

                 Snow Block Change:            PASSED
                 Snow Block Stats:             PASSED
```

DUAL SPACED NEUTRON--GIBRALTAR AFTER SURVEY FIELD CHECK SUMMARY

PERFORMED: 29-Sep-2004 07:00   LAST SHOP CALIBRATION: 27-Aug-2004 15:38

```
                       ** NEUTRON POST-CHECK SUMMARY **

                                                          Control Limit
                          Before     After    Change       On Change
                          ______    ______    ______       _________
  Snow-Block Por.(pu)      5.46      5.44     -0.02        +/- 1.50

                         PASS/FAIL SUMMARY

                 Snow Block Change:            PASSED
                 Snow Block Stats:             PASSED
```

SDL (D) WITH (A) MANDREL SHOP CALIBRATION SUMMARY

PERFORMED: 28-Aug-2004 08:08   LAST SHOP CALIBRATION: 28-Aug-2004 07:42
SERIAL NUMBER: I741M741   MODEL: SDL_DA
SOURCE NUM: 2694GW
TRUCK UNIT NUMBER: 49599   PROGRAM VERSION: 5.0
PERFORMED BY: G. ROUSSEAU

```
                  DENSITY CALIBRATION SUMMARY

                                                   CONTROL LIMIT
                 PREV VALUE     NEW VALUE         ON NEW VALUES
                 __________     _________         _____________
NEAR BAR  GAIN     1.0032         1.0014           0.90 - 1.10
NEAR DENS GAIN     1.0037         0.9995           0.90 - 1.10
NEAR PEAK GAIN     0.9825         0.9890           0.90 - 1.10
NEAR LITH GAIN     0.9857         0.9822           0.90 - 1.10

FAR  BAR  GAIN     1.0071         1.0074           0.90 - 1.10
FAR  DENS GAIN     1.0049         1.0040           0.90 - 1.10
FAR  PEAK GAIN     1.0073         1.0091           0.90 - 1.10
FAR  LITH GAIN     1.0048         1.0025           0.90 - 1.10

NEAR BAR  OFFSET   0.0128         0.0296               NONE
NEAR DENS OFFSET  -0.0247         0.0159               NONE
NEAR PEAK OFFSET   0.1420         0.0826               NONE
NEAR LITH OFFSET   0.1252         0.1572               NONE
```

```
 FAR  BART OFFSET     0.0826         0.0781              NONE
 FAR  DENS OFFSET     0.1016         0.1085              NONE
 FAR  PEAK OFFSET     0.0407         0.0245              NONE
 FAR  LITH OFFSET    -0.1017        -0.0821              NONE

 NEAR BART BKG        1106.0         1101.1             700 -1500
 NEAR DENS BKG         452.6          455.1             290 - 600
 NEAR PEAK BKG         200.3          199.3             130 - 280
 NEAR LITH BKG         189.3          187.7             125 - 270

 FAR  BART BKG         560.1          561.3             350 - 750
 FAR  DENS BKG         229.4          228.7             140 - 300
 FAR  PEAK BKG         101.7          102.0              50 - 130
 FAR  LITH BKG          98.5           98.5              50 - 130


                       CALIBRATION-BLOCK SUMMARY

                       CURRENT
                       READING      CALIB.                  CONTROL
                      (PREVIOUS     (NEW                     LIMIT
                        COEF.)      COEF.)      CHANGE     ON CHANGE
                      _________    _______     _______    _________
 MAGNESIUM
    Density  g/cc         1.678      1.678       0.000    +/- 0.015
    Pe                    2.595      2.594      -0.001    +/- 0.15
 ALUMINUM
    Density  g/cc         2.601      2.603       0.002    +/- 0.015
    Pe                    3.207      3.200      -0.007    +/- 0.15


                            TOOL SUMMARY

                        NEAR DETECTOR                  FAR DETECTOR
                  _______________________       _______________________
                   VALUE    CONTROL LIMITS       VALUE    CONTROL LIMITS
                   _____    ______________       _____    ______________
Quality
   Background      0.0015     +/- 0.0110        -0.0070     +/- 0.0140
   Mag Block      -0.0009     +/- 0.0110         0.0006     +/- 0.0140
   Alum Block      0.0005     +/- 0.0110        -0.0018     +/- 0.0140

Resolution            9.1    6.0  - 11.0            9.6     6.0 - 11.0
Verifier (B+D+P+L)   1943   1250  - 2700            990     600 - 1300

Pad temperature =  25.0


                         PASS/FAIL SUMMARY

                 Bkg Quality Check:            PASSED
                 Bkg Range Check:              PASSED
                 Bkg Resolution Check:         PASSED
                 Bkg Verification Check:       PASSED
                 Magnesium Quality Check:      PASSED
                 Aluminum Quality Check:       PASSED
                 Gains Check:                  PASSED
                 Changes in Cal. Block:        PASSED
```

SDL (D) WITH (A) MANDREL BEFORE SURVEY FIELD CHECK SUMMARY

PERFORMED: 29-Sep-2004 04:54 LAST SHOP CALIBRATION: 28-Aug-2004 08:08

```
                                                                CONTROL LIMIT
                               SHOP       BEFORE      CHANGE     ON CHANGE
                             ________   __________   ________   _____________

     Near (B+D+P+L) cps       1943.2      1933.4       -9.8       +/-  17.6
     Far  (B+D+P+L) cps        990.5       984.4       -6.0       +/-  16.9
     Near Resolution             9.11        9.09      -0.02      +/-   0.5
     Far  Resolution             9.57        9.71       0.14      +/-   1.0


Pad temperature =  14.5


                           PASS/FAIL SUMMARY

                    Bkg Quality Check:            PASSED
                    Bkg Resolution Check:         PASSED
                    Bkg Verification Check:       PASSED
```

SDL (D) WITH (A) MANDREL AFTER SURVEY FIELD CHECK SUMMARY

PERFORMED: 29-Sep-2004 07:08 LAST SHOP CALIBRATION: 28-Aug-2004 08:08

```
                                                                CONTROL LIMIT
                              BEFORE       AFTER      CHANGE     ON CHANGE
                             ________   __________   ________   _____________

     Near (B+D+P+L) cps       1933.4      1935.8        2.4      +/-  19.6
     Far  (B+D+P+L) cps        984.4       982.6       -1.9      +/-  18.3
     Near Resolution             9.1         9.1        0.0      +/-   0.5
     Far  Resolution             9.7         9.6       -0.1      +/-   1.0

Pad temperature =  14.5


                           PASS/FAIL SUMMARY

                    Bkg Quality Check:            PASSED
                    Bkg Resolution Check:         PASSED
                    Bkg Verification Check:       PASSED
```

SDL-D CALIPER: A MANDREL SHOP CALIBRATION SUMMARY

PERFORMED: 28-Aug-2004 08:25 LAST SHOP CALIBRATION: 28-Aug-2004 08:24
SERIAL NUMBER: I741M741 MODEL: SDL-DA
TRUCK UNIT NUMBER: 49599 PROGRAM VERSION: 5.0
PERFORMED BY: G. ROUSSEAU

```
                            MEASURED         CALIBRATED          UNITS
                            ________         __________          _____

VALUE 1                       8.178            8.000             INCH
VALUE 2                      16.012           16.000             INCH
GAIN                        0.00810
OFFSET                      -11.303
```

SDL-D CALIPER: A MANDREL BEFORE SURVEY FIELD CHECK SUMMARY

PERFORMED: 29-Sep-2004 05:02 LAST SHOP CALIBRATION: 28-Aug-2004 08:25

```
                              SHOP      FIELD     UNITS
                            ________  ________  _______

VALUE  1                      8.000     7.731   INCH
```

SDL-D CALIPER: A MANDREL AFTER SURVEY FIELD CHECK SUMMARY

PERFORMED: 29-Sep-2004 07:05 LAST SHOP CALIBRATION: 28-Aug-2004 08:25

```
                             BEFORE     AFTER     UNITS
```

VALUE 1	7.731	7.747	INCH

EXCELL-2000 Calibration Summary Table
Date: 29-Sep-2004 07:23

Service or Signal	Shop	Before	After	Change	Tolerance
GAMMA	205	206	204	3	+/- 9.0
Snow-Block Por.(pu)	5.08	5.46	5.44	-0.02	+/- 1.50
DENSITY NEAR(B+D+P+L)	1943.2	1933.4	1935.8	2.4	+/- 19.6
DENSITY FAR (B+D+P+L)	990.5	984.4	982.6	-1.9	+/- 18.3
CALIPER VALUE 1	8.000	7.731	7.747	-0.015	+/-0.5

SPECTRAL DENSITY
DUAL SPACE NEUTRON

Excell 2000 Tool String Diagram

GAMMA

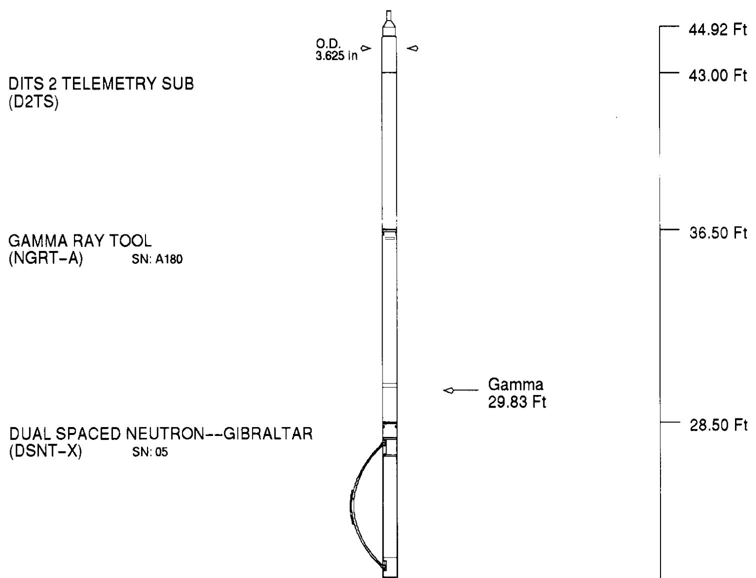

SPECTRAL DENSITY SUB
(SDL_DA) SN: I741M741

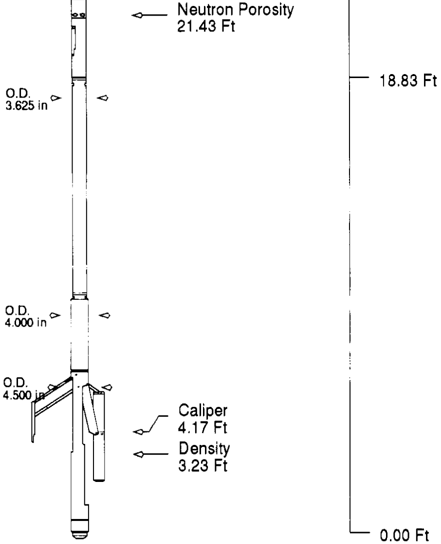

Tool Mnemonic	Length (Ft)	Weight In Air (lbs)	Logging Speed (Ft/min)
D2TS	6.50	100.00	N/A
NGRT-A	8.00	151.80	60.00
DSNT-X	9.67	150.00	60.00
SDL_DA	18.83	475.00	60.00
Tool String	43.00	876.80	60.00

COMPANY	**NORTHWEST NATURAL GAS**
WELL	**IW 13B-23-65**
FIELD	**MIST (SCHLICKER POOL STORAGE)**
COUNTY	**COLUMBIA**
STATE	**OR**

HALLIBURTON
EXCELL

SPECTRAL DENSITY
DUAL SPACED NEUTRON
GAMMA
5"=100'