Table of Contents

1.1 Section 1 – Introduction 6

1.2 Bridge Design, General 7
1.2.1 Bridge Design Standards 7
1.2.2 Bridge Design Deviations 8
1.2.3 Bridge Design Deliverables 9
1.2.4 Bridge Design Procedures 10

1.3 Loads and Distributions 11
1.3.1 Dead Loads 11
1.3.2 Live Loads 12
1.3.3 Sidewalk Loading 17
1.3.4 Vehicular Collision Forces: CT 18
1.3.5 Change in Foundations Due to Limit State for Scour 18
1.3.6 Thermal Forces 18

1.4 Structural Analysis 19
1.4.1 Ductility, Redundancy and Operational Importance (LRFD 1.3.3, 1.3.4 & 1.3.5) 19
1.4.2 Shear Correction Factor for Skewed Girders 19

1.5 Concrete 20
1.5.1 Concrete, General 20
1.5.2 Concrete Finish 21
1.5.3 Concrete Bonding Agents 24
1.5.4 Curing Concrete 24
1.5.5 Reinforcement 25
1.5.6 Precast Prestressed Concrete Elements 42
1.5.7 Cast-In-Place Superstructure 52
1.5.8 Post-Tensioned Structures 56
1.5.9 Camber Diagrams 63
1.5.10 Pour Schedules 65

1.6 Steel Structure Design and Detailing 69
1.6.1 Steel Girders 69
1.6.2 Welding 95
1.6.3 Galvanizing and Painting 101
1.6.4 Bolts and Connections 102

1.7 Aluminum 103
1.7.1 Aluminum 103

1.8 Timber Bridge Design and Detailing 104
1.8.1 Timber Bridge Locations 104
1.8.2 Timber Design and Details 104
1.8.3 Timber Connections 105
1.8.4 Timber Rails 105
1.8.5 Preservative Treatments 105
1.8.6 Field Installation 105

1.9 Decks 106
1.9.1 Design and Detailing 106
1.9.2 Deck Screeding 113
1.9.3 Deck Construction Joints 114
1.9.4 Deck Overlays 115

1.10 Foundation Considerations 127
1.10.1 Foundations, General 127
1.10.2 Lateral Earth Restraint 127
1.10.3 Underwater Construction 128
1.10.4 Foundation Modeling (Foundation Springs) 129
1.10.5 Foundation Design 145

1.11 Substructures 166
1.11.1 Retaining Structures, General 166
1.11.2 End Bents 166
1.11.3 Interior Bents 182

1.12 Buried Structures 194
1.12.1 Culvert Design, General 194
1.12.2 Tunnels (structural elements) 194

1.13 Rails, Impact Attenuators, and Protective Screening 195
1.13.1 Bridge Rail 195
1.13.2 Impact Attenuators or Crash Cushions 208
1.13.3 Protective Screening 209

1.14 Bearings and Expansion Joints 216
1.14.1 Bearings 216
1.14.2 Expansion Joints 224

1.15 Soundwalls 230
1.15.1 Soundwalls, General 230
1.15.2 Seismic Load 231
1.15.3 Factor of Safety Against Overturning (Spread footings only) 231
1.15.4 Pay limits for Soundwalls 231

1.16 (Reserved) 233

1.17 Seismic Design 233
1.17.1 Design Philosophy 233
1.17.3 Applications of AASHTO Guide Specs for LRFD Seismic Bridge Design 244
1.17.4 Liquefaction Evaluation and Mitigation Procedures 247
1.17.5 Costs 249
1.17.6 Instrumentation 249
1.17.7 Dynamic Isolators 249
1.17.8 Seismic Restrainer Design (New Designs And Retrofits) 250

1.18 FRP Composites 255
1.18.1 FRP Composites 255

1.19 (Reserved) 255

1.20 Concrete Anchors 256
1.20.1 Anchor Bolts 256
1.20.2 Drilled Concrete Anchors 257

1.21 Structural Wire Rope (Cables) and Turnbuckles 262
1.21.1 Structural Wire Rope (Cables) and Turnbuckles, General 262
1.21.2 General Notes for Structural Wire Rope, Turnbuckles and Connections 263
1.21.3 Special Provisions for Wire Rope 264
1.21.4 Special Provisions for Turnbuckles and Socket Connections 265
1.21.5 Design Properties 265

1.22 (Reserved) 266

1.23 Bridge End Panels, and Slope Paving 266

1.23.1 Bridge End Panels and Supports 266
1.23.2 Slope Paving/Railroad Slope Protection 267

1.24 Bridge Drainage 268
1.24.1 Deck Drainage 268
1.24.2 Standard Design/Drawing/Details 268
1.24.3 Selection Guidance 268
1.24.4 Design Code Guidance 268
1.24.5 Design Guidance & Lessons Learned 269
1.24.6 Detailing 269
1.24.7 Construction 272

1.25 (Reserved) 273

1.26 Corrosion Protection 273
1.26.1 Marine Environment 273
1.26.2 Marine Environment Protection 273
1.26.4 Waterproofing Membranes 276

1.27 On-Bridge Sign & Illumination Mounts 278
1.27.1 Traffic Structures Mounted on Bridges, General 278
1.27.2 On-Bridge Sign Mounts 278
1.27.3 On-Bridge Illumination Mounts 278

1.28 (Reserved) 279

1.29 Bridge Raising 279
1.29.1 Bridge Raising, General 279
1.29.2 Bridge Raising Using Falsework 279
1.29.3 Bridge Raising Using Chip-in Method 279

1.30 Strengthening of Bridges 281
1.30.1 Strengthening of Bridges, General 281
1.30.2 Permanent Strengthening of Reinforced Concrete Bridges 282

1.31 (Reserved) 284

1.32 Preservation and Repair 284
1.32.1 Preservation and Repair 284

1.33 Bridge Paint 284
1.33.1 Bridge Paint 284

1.34 (Reserved) 284

1.35 Covered Bridges 284
1.35.1 Covered Bridges 284

1.36 Moveable Bridges 284
1.36.1 Moveable Bridges 284

1.37 (Reserved) 284

1.38 Bridge Temporary Works 285
1.38.1 Introduction 285
1.38.2 Temporary Detour Bridges 286
1.38.3 Agency Provided Temporary Detour Bridge 288
1.38.4 Falsework 288
1.38.5 Shoring 291
1.38.6 Cofferdams 291

APPENDIX – SECTION 1 – GLOSSARY 297

A **297**
B **298**
C **300**
D **302**
E **303**
F **304**
G **305**
H **306**
I **306**
J **307**
K **307**
L **307**
M **308**
N **308**
O **309**
P **309**
Q **310**
R **311**
S **311**
T **314**
U **315**
V **315**
W **315**
X **316**
Y **316**
Z **316**
APPENDIX – SECTION 1 – Abbreviations (Initialisms and Acronyms) *317*
A **317**
B **317**
C **318**
D **318**
E **319**
F **319**
G **320**
H **320**

I **320**
J **320**
K **321**
L **321**
M **321**
N **321**
O **322**
P **322**
Q **323**
R **324**
S **324**
T **325**
U **325**
V **326**
W **326**
X **326**
Y **326**
Z **326**
APPENDIX – Section 1.2 – AASHTO/BDDM Cross-ReferencE *327*
APPENDIX – Section 1.11 – Substructures *333*
A1.11.1.7 End Bent Details for Prestressed Slabs and Boxes **333**
A1.11.2.2 Interior Bent Details for Prestressed Slabs and Boxes **338**
APPENDIX – Section 1.21 – Wire Rope *341*
A1.21 Cables and Turnbuckles **341**

Note: Revisions for April, 2014 are marked with yellow highlight. Deleted text is not marked; past editions of the BDDM are available for comparison.

1.1 SECTION 1 – INTRODUCTION

BDDM Section 1 contains standards and practices pertinent to highway bridges and structures design.

See BDDM Section 2 for standards and practices pertinent to detailing of highway bridges and structures.

See BDDM Section 3 for standards and practices pertinent to design procedures and quality processes for completing highway bridge and structure design.

1.2 BRIDGE DESIGN, GENERAL

Outline:

1.2.1 Design Standards

1.2.2 Design Deviations

1.2.3 Design Deliverables

1.2.4 Design Procedures

1.2.1 Bridge Design Standards

1.2.1.1 Standard Specifications and Standard Drawing Manuals

- *LRFD Bridge Design Specifications* (6th Edition 2012) published by the American Association of State Highway and Transportation Officials (AASHTO).
- *AASHTO Guide Specifications for LRFD Seismic Bridge Design* (2nd Edition, 2011).
- *LRFD Guide Specifications for the Design of Pedestrian Bridges (December 2009)* published by the American Association of State Highway and Transportation Officials (AASHTO).
- *Manual for Railway Engineering* of the American Railway Engineering and Maintenance-of-Way Association (AREMA) (formerly AREA) as modified by the individual requirements of each railroad company.
- *Oregon Standard Specifications for Construction*, published by ODOT and pertinent special provisions (for all construction except bridges carrying railways).
- *Oregon Standard Drawings,* published by Oregon Department of Transportation, Standards Engineer.

The International Building Code (IBC) as adopted by Oregon does not apply to structures within a public right of way, such as bridges, culverts, retaining walls, traffic structures, signals, sound walls, or railings. Ref: Oregon Structural Specialty Code, Section 101.2.1 General.

1.2.1.2 Use of Oregon Standard Drawing Details

The standard drawings prepared by ODOT have been developed through a long history of collaboration with Oregon contractors and fabricators. Oregon standard drawings should be used without significant change. Where a significant change to a standard drawing is needed, submit a design deviation request to the State Bridge Engineer.

Where an equivalent ODOT standard drawing or detail exists, do not use standard drawings or details from another state or agency without approval of a design deviation from the State Bridge Engineer.

1.2.2 Bridge Design Deviations

Since the bridge design field is an art that is constantly changing, it is understood that designers will occasionally want to use innovative details or methods that may differ substantially from those contained in this manual and on the standard drawings. Designers having experience in other states may also want to introduce details and methods which have worked well in those states.

Submit a request for a design deviation to the State Bridge Engineer before replacing an established detail or method from this manual or on a standard drawing with a new or unusual detail or method. This may include design methods and/or details established in other states, design methods and/or details presented in research reports, or innovative design methods and/or details developed by designers. This requirement is not intended to inhibit innovation or the ability of the designer to exercise good engineering judgment. On the contrary, it is intended to allow good innovative ideas to be used and to potentially become part of this manual.

(1) Design Deviation – A deviation form is available on the ODOT Bridge Engineering web site. It is not mandatory to use this form; however, it is strongly encouraged. The request should include a brief description of the project, an explanation of the issues, what is being proposed a justification for the proposed deviation, and any supporting documents. The request may be submitted by e-mail. Send deviation requests to:

Bruce Johnson, State Bridge Engineer bruce.v.johnson@odot.state.or.us, and
Emily Maurer, Bridge Standards and Practices Engineer, emily.maurer@odot.state.or.us

The request will be distributed to and evaluated by the BDDM technical specialists. The State Bridge Engineer makes the final decision to accept or reject a request for design deviation. A response to each request will be returned by e-mail as soon as possible.

(2) Technical Bulletins – From time to time, technical issues arise between scheduled BDDM updates which require urgent distribution of guidance to the design community. These are handled by Technical Bulletins. Check the ODOT Bridge Engineering web page for status of Technical Bulletins.

1.2.3 Bridge Design Deliverables

1. Bridge Design Quality Plan (may be part of Region Design Quality Plan)
2. TS&L Report
    a. TS&L Memo or TS&L Narrative
    b. TS&L Plan Sheet(s)
    c. Engineer's Estimate @ TS&L
    d. Design Deviations and Exceptions
3. Preliminary/Progress Plans Package
    a. Preliminary/Progress Plans Plan Sheets
    b. Engineer's Estimate @ Preliminary/Progress Plans
4. Advance Plans Package
    a. Advance Plans Plan Sheets
    b. Engineer's Estimate @ Advance Plans
    c. Engineer's Estimate of probable construction schedule
    d. Draft Special Provisions
5. Final Plans Package
    a. Final Plans Plan Sheets
    b. Engineer's Estimate @ Final Plans
    c. Updated estimate of probable construction schedule
    d. Final Special Provisions
6. Calculation Book(s)
7. Load Ratings (See ODOT LRFR Manual)
8. Microstation CAD Files (See *BDDM 2*)
9. Native electronic computer files
    a. Excel calculation files
    b. MathCadd calculation files
    c. Structural analysis program files

1.2.4 Bridge Design Procedures

See *BDDM 3* for the following information:

- Design Software
- Overview of Design Procedures
- Roles & Responsibilities
- Quality
- QPL / Research
- Preliminary Design / TS&L
- Final Design / PS&E
- Advertisement & Award
- Construction Support
- Other Discipline Coordination
- Bridge Type & Considerations
- Bridge Layout
- Safety & Accessibility
- Bridge Security
- Aesthetics
- Bridge Name Plates & ID Markers
- Accelerated Bridge Construction (ABC)

1.3 LOADS AND DISTRIBUTIONS

Outline:

1.3.1 Dead Loads

1.3.2 Live Loads

1.3.3 Sidewalk Loading

1.3.4 Vehicular Collision Force: CT

1.3.5 Change in Foundations Due to Limit State for Scour

1.3.6 Thermal Forces

1.3.1 Dead Loads

General – Knowledge of the capacity of each bridge to carry loads is critical prior to increasing dead load or any change to section properties of main load carrying members. A Load Rating that reflects the current condition of each bridge is a valuable tool that is used to identify the need for load posting or bridge strengthening. Review the latest load rating or conduct load rating for feasibility study of a project at scoping stage.

When the load rating of the existing structure is available check the latest Bridge Inspection conditions' rating report against condition rating used for load rating. Rating of a structure decreases with an increase in dead load and may result in posting of the bridge. Contact program unit when you needed assistance in a load rating.

For all non-load-path-redundant steel truss bridges, the designer will verify that the stress levels in all structural elements, including gusset plates, remain within applicable requirements whenever planned modifications or operational changes may increase stresses.

(1) Box Girder Deck Forms - Where deck forms are not required to be removed, an allowance of 10 psf for form dead load shall be included.

(2) Shortening - Dead load should include the elastic effects of stressing (pre or post-tensioned) after losses. The long-term effects of shrinkage and creep on indeterminate reinforced concrete structures may be ignored, on the assumption that forces produced by these processes will be relieved by the same processes.

(3) Utilities - Where holes are provided for future utilities, estimate the dead load of such utilities as that for a water-filled pipe of 2 inches smaller nominal diameter than that of the hole. For 12 inch holes, the dead load may be assumed to be 90 plf.

(4) Wearing Surface - Provide the following minimum present wearing surface (pws) and future wearing surface (fws) allowances.

	pws	fws
All bridges with CIP concrete decks	0	25 psf (2 inches)
Side-by-side construction w/ ACWS	40 psf (3 inches)	25 psf (2 inches)

For side-by-side construction, provide additional pws allowance above 40 psf as needed to account for crown and superelevation buildup. The 3 inch minimum thickness is intended to provide sufficient thickness such that future maintenance resurfacing can be performed by removal and replacement of the upper 1.5 inches.

1.3.2 Live Loads

(1) New Vehicular Traffic Structures - Design by *AASHTO LRFD Bridge Design Specifications* using all of the following loads:

Service and Strength I Limit States:

- HL-93: Design truck (or trucks per *LRFD 3.6.1.3*) or the design tandems and the design lane load.

Strength II Limit State:

- ODOT OR-STP-5BW permit truck
- ODOT OR-STP-4E permit truck

Note: ODOT Permit Loads are shown in *Figure 1.3.2A*. In May 2006, ODOT Permit Load designations were changed as follows:

OR-STP-5B	changed to	OR-STP-4D
OR-STP-5C	changed to	OR-STP-4E
OR-STP-5BW	no change	

Axle weights and axle spacing's did not change, only the designations.

For single-span bridges with prismatic girders, *Figures 1.3.2B to 1.3.2E* are provided to help determine the controlling permit truck for various span lengths.

OREGON PERMIT LOADS FOR STATE OWNED BRIDGES

Indicated concentrations are Axle Loads in Kips

Type OR–STP–4D

8 Axle Vehicle
Gross Weight = 162.5K

Representative Sample of Single Trip Permit in Weight Table 4

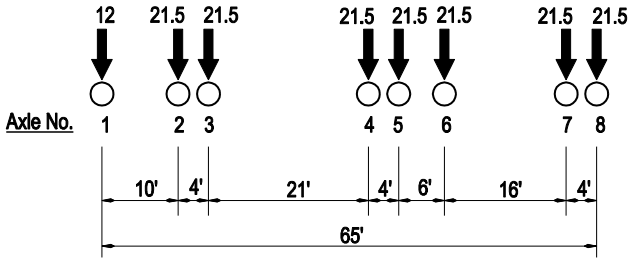

Type OR–STP–5BW

9 Axle Vehicle
Gross Weight = 204K

Representative Sample of Single Trip Permit with Bonus Weights in Weight Table 5

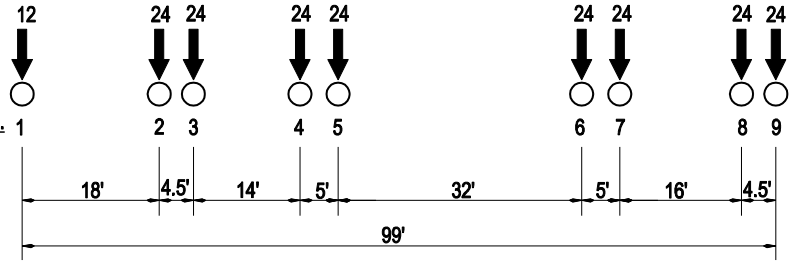

Type OR–STP–4E

13 Axle Vehicle
Gross Weight = 258K

Representative Sample of Single Trip Permit in Weight Table 4

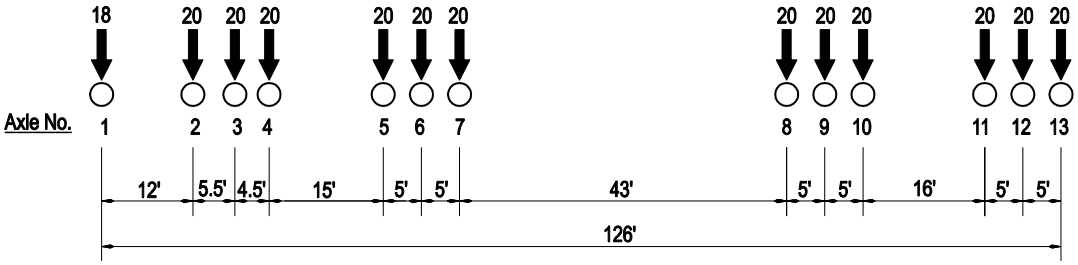

Figure 1.3.2A

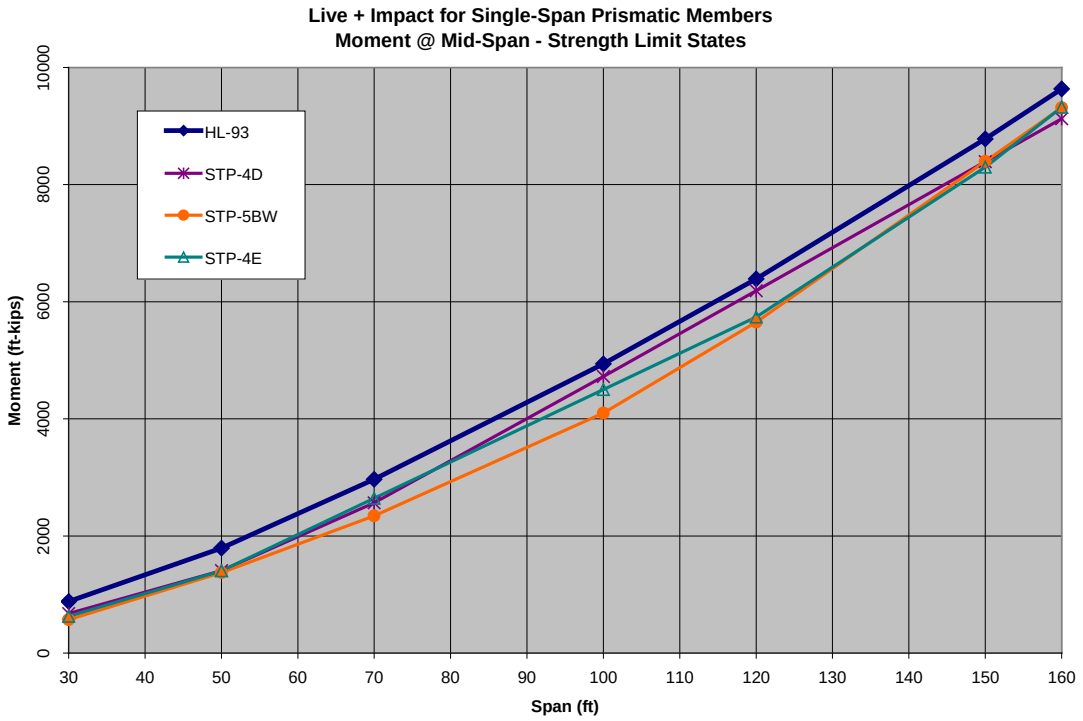

Figure 1.3.2B

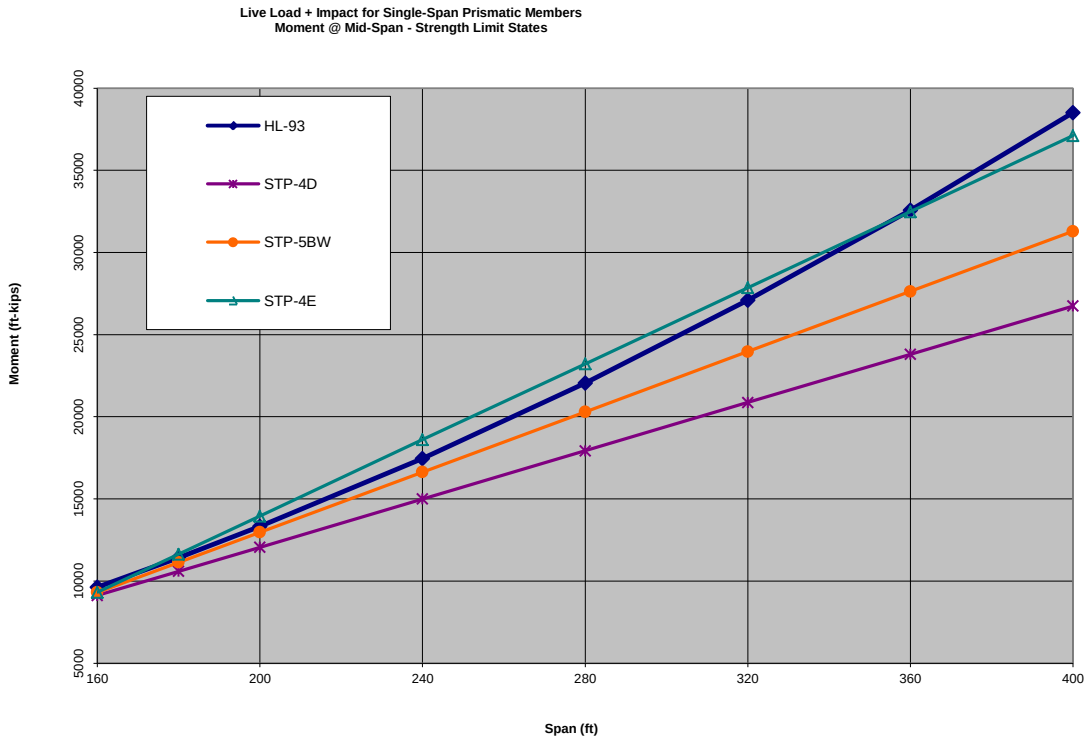

Figure 1.3.2C

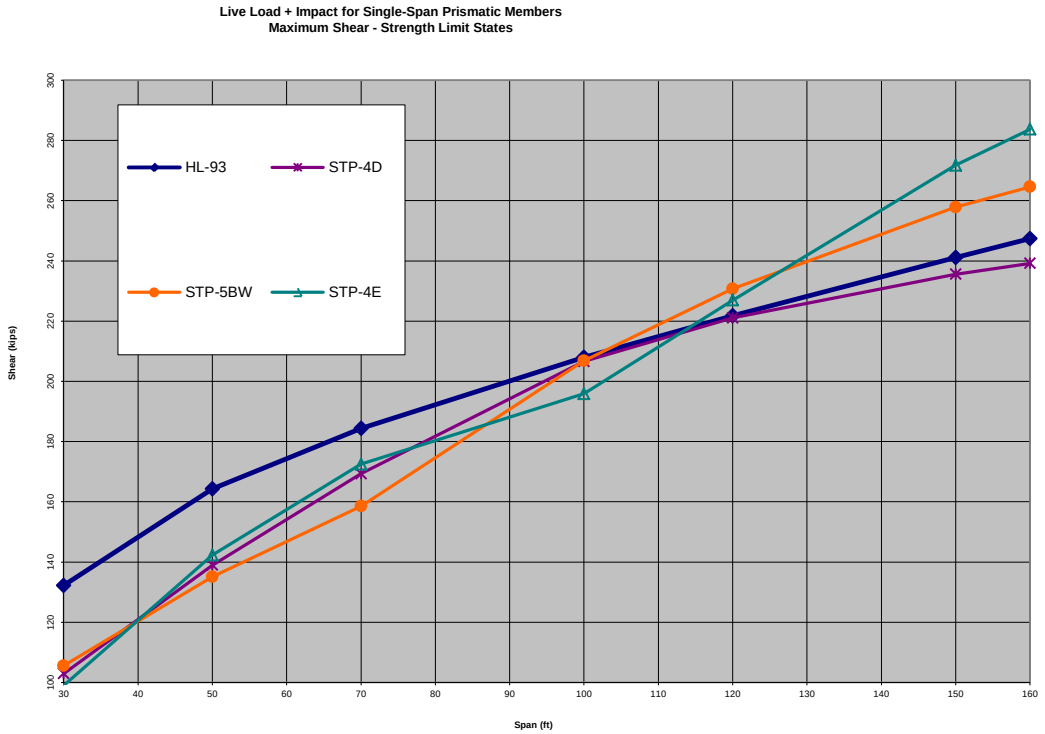

Figure 1.3.2D

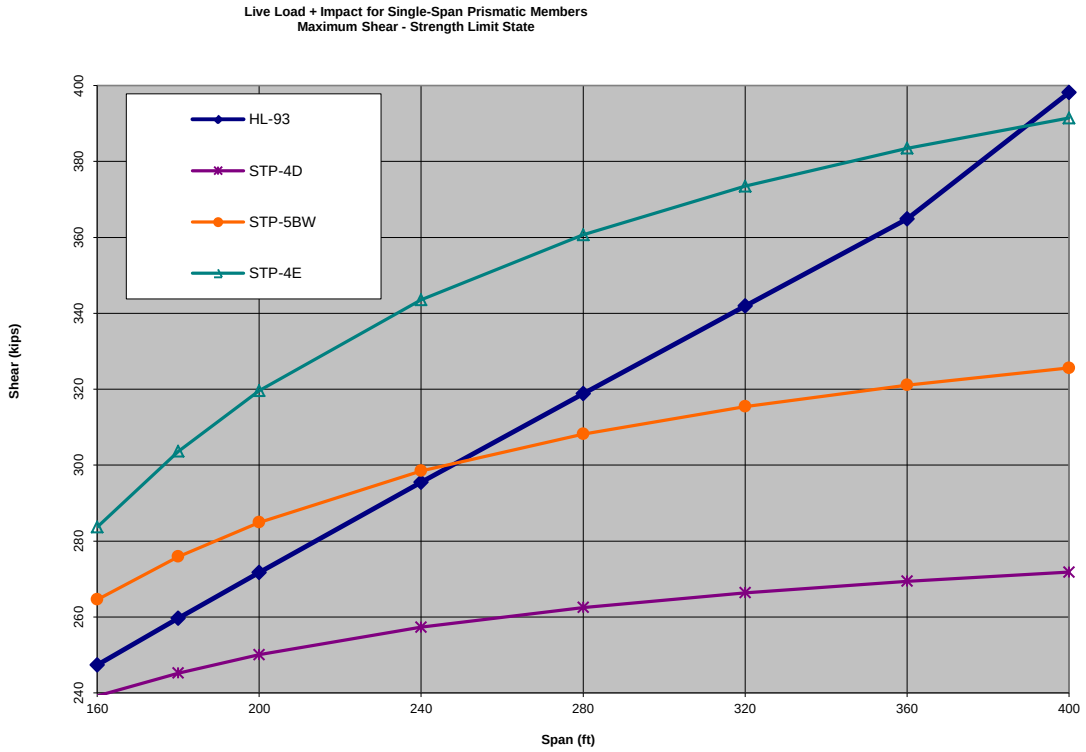

Figure 1.3.2E

(2) Pedestrian Structures – For bridges designed for only pedestrian and/or bicycle traffic, use a live load of 90 psf. If an Agency design vehicle is not specified, use AASHTO Standard H-5 or H-10 Truck loading as shown in *Figure 1.3.2F* below to check the longitudinal beams. A vehicle impact allowance is not required. For a pedestrian and/or bikeway bridge clear deck width less than 7' do not consider the maintenance truck. See also the AASHTO "*LRFD Guide Specifications for the Design of Pedestrian Bridges".*

Clear deck width 7' to 10'	10,000 lb. (H5 Truck)
Clear deck width over 10'	20,000 lb. (H10 Truck)

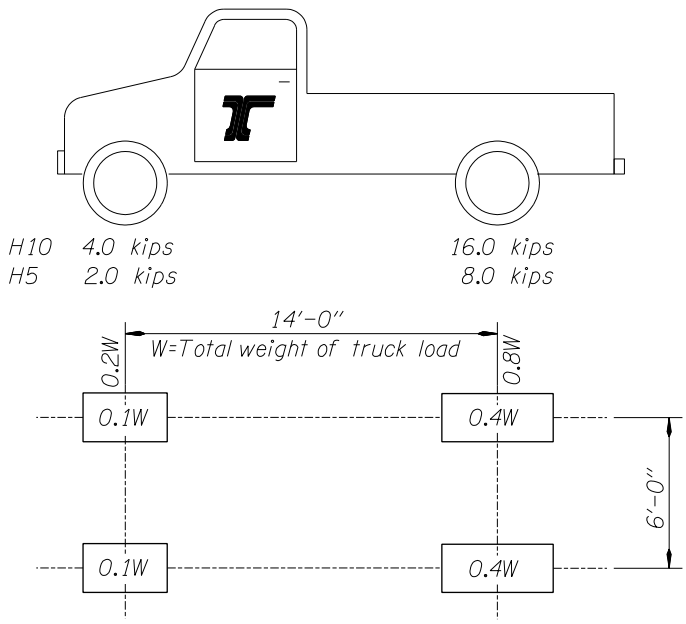

Figure 1.3.2F

(3) Widening of Vehicular Traffic Structures – When widening an existing structure, the widening will generally be designed using the loading given in *BDDM 1.3.2(1)*. Designs using a lesser design live load will require an exception letter from the State Bridge Engineer. Live loading will never be less than the design live load for the existing structure.

(4) Structure Repair and/or Strengthening – When repairing or strengthening an existing structure it is not necessary to meet the loading given in *BDDM 1.3.2(1)*. Design repair or strengthening projects for the maximum load effect from the following permit trucks using the AASHTO LRFD Bridge Design Specifications Strength II Limit State (see *Figure 1.3.2A* for vehicle descriptions and LRFD Table 3.4.1-1 for Load Factors):

- ODOT OR-STP-4D
- ODOT OR-STP-5BW
- ODOT OR-STP-4E

(5) Distribution Factors

New, Replacement, & Strengthening Bridge Designs: Use the live load distribution factors and procedures provided in the AASHTO LRFD Bridge Design Specifications to determine load effects on bridge members. Higher level techniques such as finite element analysis or grillage analysis will not be accepted as a basis for adjustment of AASHTO live load distribution factors for design of new bridges.

For single-span bridges with prismatic girders, *Figures 1.3.2B to 1.3.2E* are provided to help determine the controlling permit truck for various span lengths.

For repair and/or strengthening of prestressed concrete structures, ensure the requirements of Service I and III Limit States are satisfied using HL-93 loading.

See *BDDM 1.30* for additional criteria for strengthening bridges.

Bridge Load Ratings: Use live load distribution factors provided in the AASHTO LRFD Bridge Design Specifications to make the initial analysis. However, if the load rating is not acceptable, a higher level technique such as finite element analysis or grillage analysis may be considered. Using a higher level technique is acceptable for load rating because we are analyzing the loading conditions on an existing bridge and trying to avoid needlessly spending money to strengthen a bridge or post a bridge that may not need it.

See the ODOT Load Rating Manual for further guidance.

1.3.3 Sidewalk Loading

For sidewalks not separated from traffic by a structural rail, account for the potential for a truck to mount the sidewalk. Design the sidewalk for the greater of:

- 0.075 ksf pedestrian loads considered simultaneously with the vehicular load in the adjacent lane as stated in *BDDM 3.6.1.6* of the LRFD Bridge Design Specifications. Per *BDDM 3.6.2* in LRFD, impact should not be applied to pedestrian loads.

- The LRFD design truck placed with a line of wheels 2.0 feet from the face of rail. Do not apply a lane load with the design truck, but do include impact. Consider this load only under the Strength I limit state. Do not consider trucks or vehicle loads in adjacent lanes. Do apply the multiple-presence factor (m) for this case.

In addition to the above cases, ensure the supporting member (exterior girder) is adequate for HL-93 loading should the sidewalk be removed and a standard concrete barrier (per BR200) be placed at the edge of deck.

1.3.4 Vehicular Collision Forces: CT

Modify *LRFD 3.6.5* as follows:

a. For barriers 0-4 feet clear distance from the face of the component to the back side of the rail, provide a special design wall or barrier at least 54 inches high with independent foundation, or use a minimum 36 inch circular (or equivalent square) column with 1-1/2 percent minimum longitudinal steel reinforcement.

b. For barriers 4-9 feet clear distance from the face of the component to the back side of the rail, use 42 inch barrier with no independent foundation, but with standard pin anchorage to subgrade, and apply a column load depending on distance from the column to the edge of lane as follows:
   a. Up to 15 feet clear distance, use 90 kips.
   b. From 15 -30 feet clear distance, use 160 kips.
   c. For greater than 30 feet clear distance, use 290 kips, OR

   Do not apply a column load, but use a minimum 36 inch circular (or equivalent square) column with 1-1/2 percent minimum longitudinal reinforcement.

c. For barriers 10 feet or greater from component, use 42 inch barrier without independent foundation, but with standard pin anchorage to subgrade, and do not apply a column load.

1.3.5 Change in Foundations Due to Limit State for Scour

In lieu of *LRFD 2.6.4.4.2* bullet two and *LRFD 3.7.5*, the Extreme Limit States shall be applied in accordance with *LRFD 3.4.1* and the Extreme Event I Limit State should only include the anticipated scour depth due to channel degradation. *LRFD 2.6.4.4.2* bullet one shall still apply. Estimates of channel degradation should be obtained from the Hydraulic Designer.

1.3.6 Thermal Forces

Use the following temperature ranges:

		Metal Structures	Concrete Structures
Section I	Mild Climate	$+10^0$ F. to $+110^0$ F.	$+22^0$ F. to $+72^0$ F.
Section II	Moderate Climate	-10^0 F. to $+120^0$ F.	$+12^0$ F. to $+82^0$ F.
Section III	Rigorous Climate	-30^0 F. to $+120^0$ F.	0^0 F. to $+82^0$ F.

Section I designates that portion of the state west of the Coast Range, Section II the valley region between the Coast Range and Cascade Mountains, and Section III the Cascade Mountains and all of eastern Oregon. For structures in the Columbia River Gorge, use Section III.

Figure the rise and fall in temperature from an assumed temperature at time of erection. The annual mean temperature for Sections I and II is 52 degree F. and for Section III is 47 degree F.

1.4 STRUCTURAL ANALYSIS

Outline:

1.4.1 Ductility, Redundancy and Operational Importance

1.4.2 Shear Correction Factor for Skewed Girders

1.4.1 Ductility, Redundancy and Operational Importance (LRFD 1.3.3, 1.3.4 & 1.3.5)

LRFD I provides three adjustment factors; η_D for ductility, η_R for redundancy and η_I for operational importance. Apply the ductility and redundancy factors per LRFD without change. Submit a deviation to the State Bridge Engineer before using a redundancy factor < 1.0. For the operational importance factor, consider all bridges as "typical" (η_I = 1.0).

1.4.2 Shear Correction Factor for Skewed Girders

Apply a live load shear correction factor according to *Table 4.6.2.2.3c-1* in the LRFD Bridge Design Specifications to the critical shear section near the support for exterior longitudinal beam (girder) members that are on skewed bents. Vary the correction factor along the length of the girder linearly from full value at the critical shear section to zero at midspan.

For interior girders, apply a portion of the exterior girder correction factor (CF_{ext}) as follows:

- Side-by-side slabs or boxes $CF_{int} = 1 + 0.5 * (CF_{ext} - 1)$
- Girder bridges and spread slabs or boxes $CF_{int} = 1 + 0.25 * (CF_{ext} - 1)$

The shear correction factor is intended to protect against increased loading at obtuse corners. Therefore, the additional shear capacity is really only needed at the obtuse corners. However, for simplicity of construction it is recommended that the both obtuse and acute girder ends be detailed the same.

Where additional steel to meet the shear correction factor loading is minor, designers should consider whether or not it is economical to detail interior girders the same as exterior girders. This may often be the case for precast, prestressed concrete members.

Standard drawings for precast, prestressed members assume each member will have the same shear details at each end of the bridge. For simplicity of construction it is recommended that both ends be detailed the same. In the rare case when ends are not detailed the same, contract provisions should be added to ensure the intended bent location for each girder end is clearly marked on the girder before the girder is transported to the job site.

1.5 CONCRETE

Outline:

1.5.1 Concrete, General

1.5.2 Concrete Finish

1.5.3 Concrete Bonding Agents

1.5.4 Curing Concrete

1.5.5 Reinforcement

1.5.6 Precast Prestressed Concrete Elements

1.5.7 Cast-In-Place Superstructure

1.5.8 Post-Tensioned Structures

1.5.9 Camber Diagrams

1.5.10 Pour Schedules

1.5.1 Concrete, General

Designate the concrete class by the minimum compressive strength at 28 days followed by the maximum aggregate size (e.g., Class 4000 – 3/4). Unless otherwise specified, Class 3300 – 1-1/2, 1 or 3/4 is called for by the Standard Specifications. The ultimate strength on which allowable stresses are based should not exceed 5000 psi, except for prestressed concrete. Use High Performance Concrete (HPC) in all cast-in-place concrete decks and end panels.

Classes of Concrete
(For design and to be shown on plans)

HPC4000 – 1-1/2, or 1	All poured decks [except Box Girder decks that require greater strength]
HPC4000 – 1-1/2, or 1	End Panels
4000 – 3/8	Drilled Shafts
XXXX – 3/4	Prestressed members [Does not include poured deck on prestressed members, see above]
XXXX – 1/2 or 3/8	Post-tensioned box girder bottom slab and stem walls
XXXX – 3/4	Compression Members
3300 – 1-1/2, 1, or 3/4	All other concrete

Modulus of Elasticity

The modulus of elasticity of concrete may be taken as $E_c = 33{,}000\ w_c^{1.5} \sqrt{f'c}$, for $w_c = 0.145$ kcf

Concrete Strength f'c (ksi)	E_c (ksi)	$n=E_s/E_c = 29{,}000/E_c$
3.300	3300	9
4.000	3650	8
5.000	4050	7
5.500	4250	7
6.000	4450	6
6.500	4650	6
7.000	4800	6
7.500	5000	6
8.000	5150	6
8.500	5300	5
9.000	5450	5

In the chart above, the modulus of elasticity (E_c) is rounded to the nearest 50 ksi and the modular ratio (n) is rounded to the nearest integer. The designer may choose to calculate these values using standard formulas rather than using the rounded values above.

1.5.2 Concrete Finish

Concrete finishes are defined in *SP 00540.52* of the *Oregon Standard Specifications for Construction*. The usual finishes are General Surface Finish and Class 1 Surface Finish. Occasionally, Class 2 Surface Finish is used as mentioned in the following paragraph.

Generally, concrete finishes are selected as follows:

- For bridges whose superstructure and substructure can be viewed by the public, such as grade separations and river crossings in or near populated areas, exposed surfaces receive a Class 1 Surface Finish. In special situations of high visibility to traffic or people, use of a Class 2 Surface Finish may be considered. Normally, it is limited to the concrete rail sides facing the roadway/bikeway and the tops.

- For bridges not viewed by large segments of the public, such as stream crossings in sparsely populated areas, exposed surfaces, except portions of the concrete bridge rail, receive a General Surface Finish. The concrete rail sides facing the roadway/bikeway and tops receive a Class 1 Surface Finish.

Review your selected surface finish with your Design Team.

Do not use color additives in concrete mixes. Provide color to concrete only by coating with either concrete stain or concrete paint products from the QPL.

Include details similar to *Figures 1.5.2A, 1.5.2B, or 1.5.2C* for all contract plans:

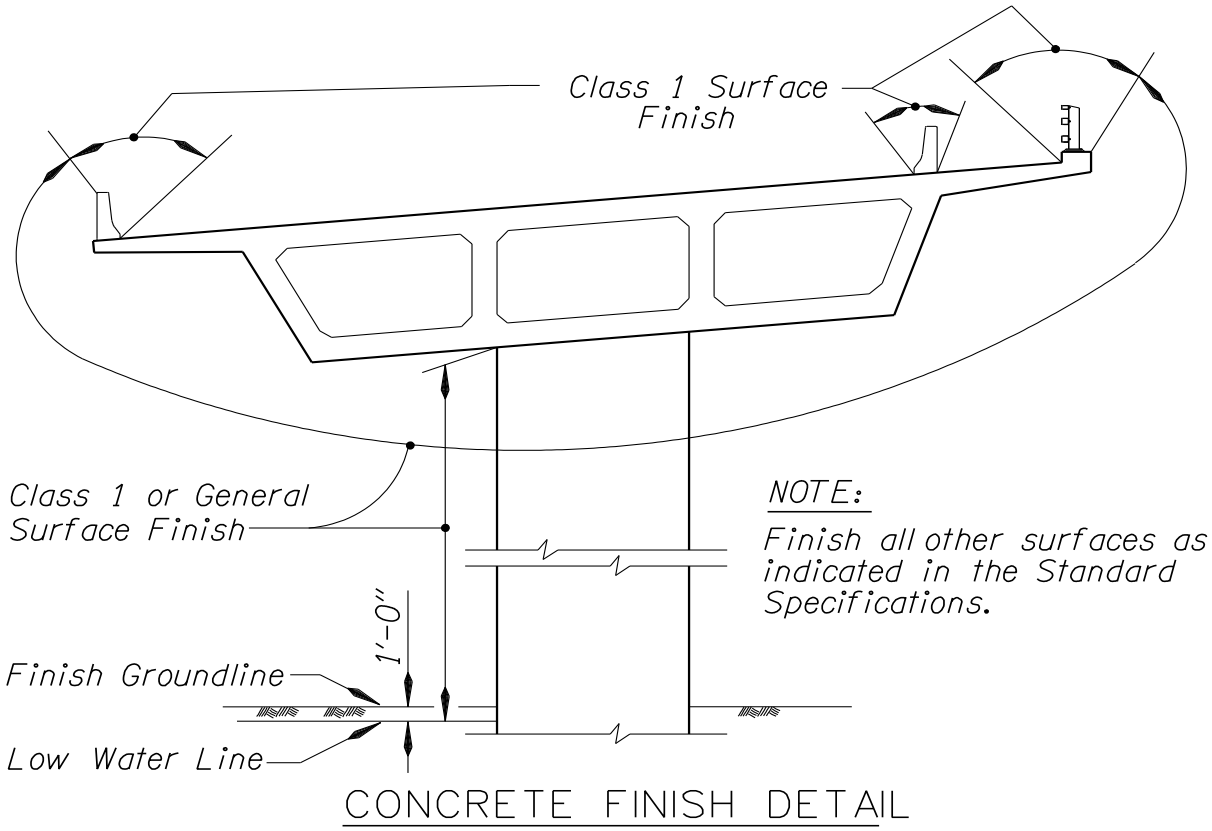
Class 1 Surface Finish
Class 1 or General Surface Finish
NOTE:
Finish all other surfaces as indicated in the Standard Specifications.
1'-0"
Finish Groundline
Low Water Line
CONCRETE FINISH DETAIL

Figure 1.5.2A

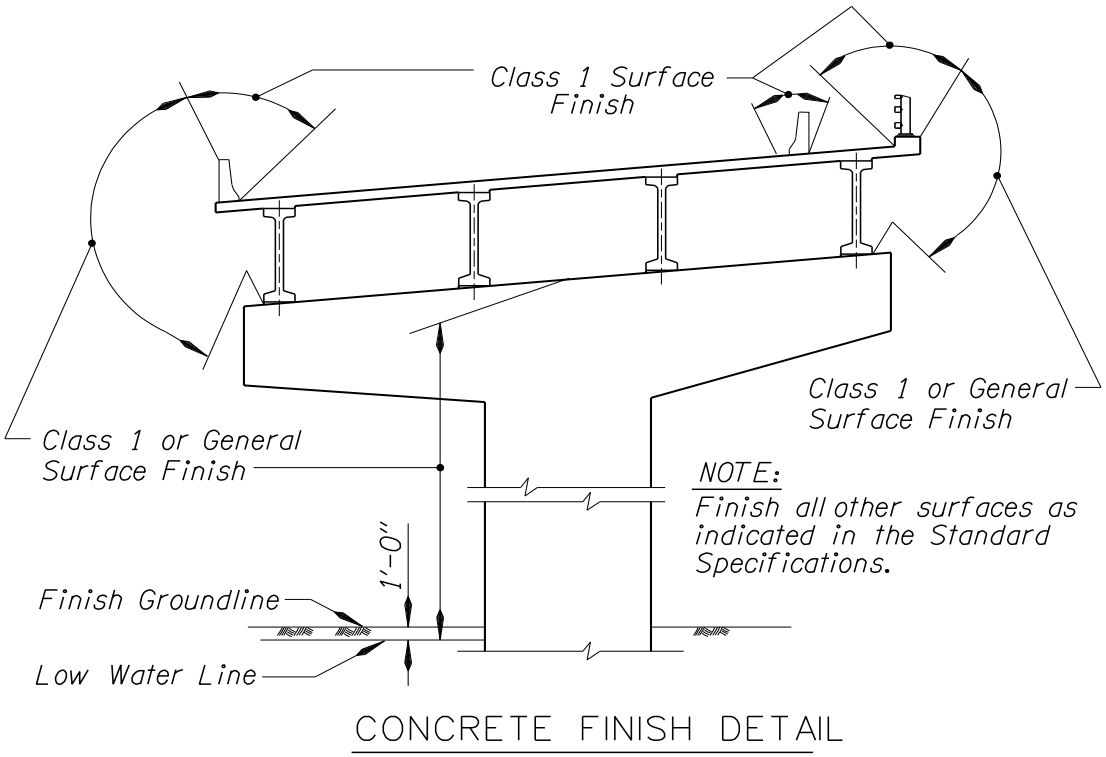

Figure 1.5.2B

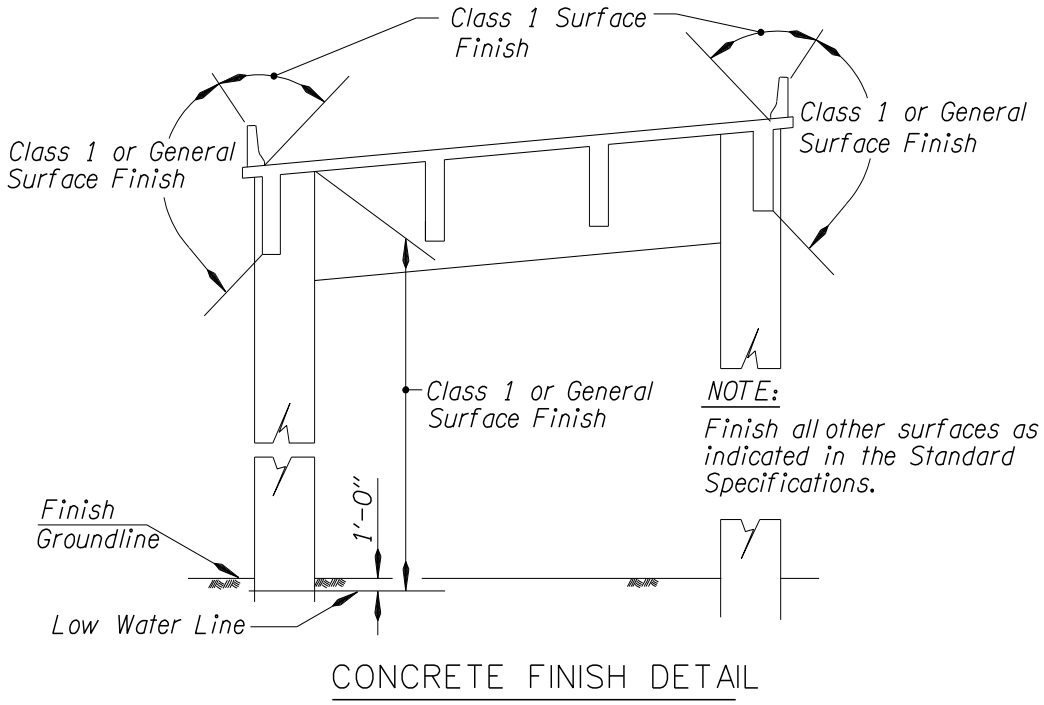

Figure 1.5.2C

1.5.3 Concrete Bonding Agents

Bonding agents are used to help new concrete adhere to existing concrete. To obtain better bond with agents the existing surface must be clean, dry and at proper temperature. The surfaces must also be well exposed to facilitate brush application of the bonding agent. Two principal bonding agents are in use today:

- Epoxy - These agents provide the best bond when properly applied. However, they are highly volatile and if the agent is allowed to dry before placement of the new concrete, a bond breaker may be formed. For this reason restrict the use of epoxy agents to critical situations where control can be guaranteed.

- Concrete - These agents have longer pot life and improved bond. They may be applied with greater lead time, but have the same application requirements as epoxy agents.

At normal construction joints, a bonding agent is not generally needed. Mating surfaces prepared to the specifications should provide acceptable bond and shear transfer through the roughened surface and rebar holding a tight joint.

1.5.4 Curing Concrete

SP 00540.51 in the standard specifications require cast-in-place concrete to be cured with water. Design all structures assuming concrete is cured using the ODOT standard. Acting as EOR, assure that alternate curing methods are not allowed without prior approval of the ODOT Structure Materials Engineer.

Bridge Decks must also be cured with water. Although ODOT does use curing compounds for some pavement and sidewalk applications, curing compounds are not be allowed on bridge decks. ODOT has done experimentation with curing compounds in the early 90's. The results were not consistent from batch to batch. Also, more recent experiments with curing compounds revealed that cylinders cured with a curing compound achieved only 80 percent compressive strength compared to water cured cylinders.

The ODOT water cure requirement also applies to bridge columns, abutments and retaining walls. Since it is difficult to keep vertical surfaces saturated during the cure period, vertical forms must often be left in place for the entire cure period. Contractors will often request to use a curing compound so that forms can be stripped sooner and production increased. However, due to the negative impacts of curing compounds, their use is rarely permitted.

For applications that receive a coating, use of curing compounds can inhibit adherence of the coating. Generally, curing compounds must be removed by sandblasting before subsequent coatings can be applied. Removal of a curing compound would be even more problematic on textured surfaces.

In summary, curing compounds should not be used. Exceptions require approval from the ODOT Structure Materials Engineer, but do not require a design deviation from Bridge Section.

1.5.5 Reinforcement

1.5.5.1 Reinforcement, General

Make sure there is enough room for bars to fit and to place concrete. Be sure steel can be placed and supported. Show bolster bars on reinforcement details when needed.

1.5.5.1.1 Standard Bar Chart

Bar #	Nominal Dia. (in)	Area (in^2)	Weight (lb/ft)
3	0.375	0.11	0.376
4	0.500	0.20	0.668
5	0.625	0.31	1.043
6	0.750	0.44	1.502
7	0.875	0.60	2.044
8	1.000	0.79	2.670
9	1.128	1.00	3.400
10	1.270	1.27	4.303
11	1.410	1.56	5.313
14	1.693	2.25	7.650
18	2.257	4.00	13.60

Figure 1.5.5.1.1

1.5.5.1.2 Minimum Bar Covering

The minimum covering measured from the surface of the concrete to the face of any uncoated or coated reinforcing bar should be not less than 2 inches except as follows.

Location:	Cover (in)
Top of deck slab (main reinforcing)*	2.5
Bottom of deck slab*	1.5
Stirrups and ties in T-beams, bottom rebar of slab spans, and curbs and rails*	1.5
Stirrups in box girder stems with non-bundled ducts **	2.5
Stirrup ties in box girder stems with non-bundled ducts **	2
Bottom slab steel in box girders	1
All faces in precast members (slabs, box beams and girders)	1
Pier and column spirals, hoops or tie bars+ (increase to 4” if exposed to marine environment or concrete is deposited in water)	2.5
Footing mats for dry land foundations (use 6” if ground water may be a construction problem)	3
Footing mats for stream crossing foundations	6

*Use 2 inches minimum cover for all surfaces exposed to the effects of a marine environment, *BDDM 1.26*.
**For box girder stems with bundled ducts, provide 3 inches clearance to ducts and place stirrups directly against ducts.
+Cover over supplementary crossties may be reduced by the diameter of the tie.

Figure 1.5.5.1.2

1.5.5.1.3 Reinforcement for Shrinkage and Temperature

Provide reinforcement for shrinkage and temperature stresses near exposed surfaces and in structural mass concrete according to *LRFD 5.10.8*. The area of reinforcement per surface should be at least 0.0008 times the gross concrete area with a minimum of #4 at 18 inch centers. Space the reinforcement no farther apart than three times the concrete thickness or a maximum of 18 inch centers.

Thickness (in)	A_s (in^2/ft)	MAXIMUM BAR SIZE AND SPACING FOR ONE SURFACE (inches)			
6	0.062	#4 @ 18			
9	0.091	#4 @ 18			
12	0.118	#4 @ 18			
15	0.144	#4 @ 15			
18	0.170	#4 @ 12			
21	0.194	#4 @ 12	#5 @ 18		
24	0.217	#4 @ 10	#5 @ 15		
27	0.239	#4 @ 10	#5 @ 15		
30	0.260		#5 @ 12	#6 @ 18	
36	0.300		#5 @ 12	#6 @ 15	
48	0.371		#5 @ 10	#6 @ 12	#7 @ 18
60	0.433			#6 @ 12	#7 @ 15

Figure 1.5.5.1.3

Since the amount of reinforcement is somewhat empirical, convenient spacing can be assumed as shown in the above table. The table is intended for preliminary purposes only. It is based on a least width dimension of 10 feet.

1.5.5.1.4 Spacing of Shear Reinforcement

Where shear reinforcement is required and placed perpendicular to the axis of the member, spacing is not to exceed 18 inches.

1.5.5.1.5 Negative Moment Reinforcement

For cantilever crossbeams with wide bents, extend at least one-half of the negative reinforcement the full length of the crossbeam.

1.5.5.1.6 Minimum Bar Spacing

Bar #	Nominal Dia.(d) (in)	2.5 x d or 1.5”+d (in)	(1.5x1.5) + d for 1.5” agg. (in)	(1.5x0.75)+ d for 0.75” agg. (in)
3	0.375	1-7/8	2-5/8	1-1/2
4	0.500	2	2-3/4	1-5/8
5	0.625	2-1/8	2-7/8	1-3/4
6	0.750	2-1/4	3	1-7/8
7	0.875	2-3/8	3-1/8	2
8	1.000	2-1/2	3-1/4	2-1/8
9	1.128	2-7/8	3-3/8	2-1/4
10	1.270	3-1/4	3-1/2	2-3/8
11	1.410	3-5/8	3-5/8	2-1/2
14	1.696	4-1/4	4	2-7/8
18	2.257	5-5/8	4-1/2	3-3/8

Figure 1.5.5.1.6

1.5.5.1.7 *Tension Development Length - GRADE 60 – Uncoated Bars

Bar #	f'c =3.3 ksi	f'c =4.0 ksi	f'c =5.0 ksi
3	1’-0”	1’-0”	1’-0”
4	1’-0”	1’-0”	1’-0”
5	1’-3”	1’-0”	1’-0”
6	1’-7”	1’-6”	1’-6”
7	2’-1”	1’-11”	1’-9”
8	2’-9”	2’-6”	2’-3”
9	3’-6”	3’-2”	2’-10”
10	4’-5”	4’-0”	3’-7”
11	5’-5”	4’-11”	4’-5”
14	7’-6”	6’-9”	6’-1”
18	9’-8”	8’-9”	7’-10”

* Note: Increase lengths for epoxy coated bars per LRFD 5.11.2.1.2.

Figure 1.5.5.1.7

1.5.5.1.8 *Compression Development Length - GRADE 60 – Uncoated Bars

Bar #	f'c =3.3 ksi	f'c =4.0 ksi	f'c =5.0 ksi
3	8”	8”	8”
4	11”	10”	9”
5	1’-1”	1’-0”	1’-0”
6	1’-4”	1’-3”	1’-2”
7	1’-7”	1’-5”	1’-4”
8	1’-9”	1’-7”	1’-6”
9	2’-0”	1’-10”	1’-9”
10	2’-3”	2’-0”	1’-11”
11	2’-6”	2’-3”	2’-2”
14	3’-0”	2’-8”	2’-7”
18	3’-11”	3’-7”	3’-5”

* Note: Increase lengths for bundled bars per LRFD 5.11.2.2.3.

Figure 1.5.5.1.8

1.5.5.1.9 *Tension Development Length of Hooks - GRADE 60 – Uncoated Bars

Bar #	f'c =3.3 ksi	f'c =4.0 ksi	f'c =5.0 ksi
3	8”	8”	7”
4	11”	10”	9”
5	1’-1”	1’-0”	11”
6	1’-4”	1’-3”	1’-1”
7	1’-7”	1’-5”	1’-3”
8	1’-9”	1’-7”	1’-5”
9	2’-0”	1’-10”	1’-8”
10	2’-3”	2’-1”	1’-10”
11	2’-6”	2’-3”	2’-0”
14	3’-0”	2’-9”	2’-5”
18	4’-0”	3’-7”	3’-3”

* Note: Increase lengths 20% for epoxy coated bars per LRFD 5.11.2.4.2.

Figure 1.5.5.1.9

1.5.5.1.10 Minimum Column Bar Lengths in Footings

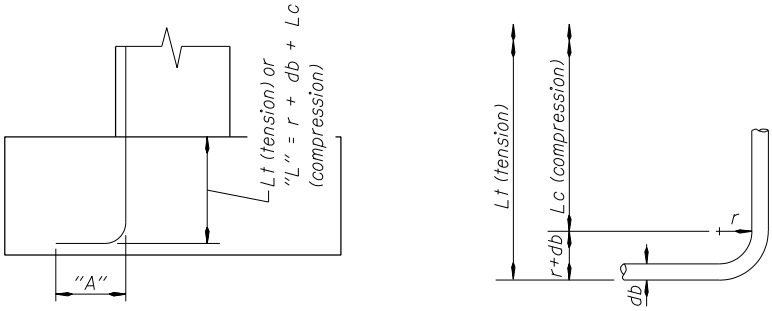

Note:
Increase Lt or Lc 20 percent or epoxy coated bars
"A" and r + db are standard 90° hook dimensions
Lc is the compression development length
Lt is the tension development length for standard hooks

COMPRESSION DEVELOPMENT LENGTH - HOOKED BARS						
BASIC COMPRESSION DEVELOPMENT (length for hooked bars ℓdh	BAR SIZE	"A"	r + db	COMPRESSION "L" * (single bar)	COMPRESSION "L" * (two bar bundle)	COMPRESSION "L" * (three bar bundle)
1'-4"	6	1'-0"	3"	1'-2"	1'-4"	1'-5"
1'-7"	7	1'-2"	3½"	1'-4"	1'-6"	1'-8"
1'-9"	8	1'-4"	4"	1'-6"	1'-9"	1'-10"
2'-0"	9	1'-7"	6"	1'-10"	2'-1"	2'-3"
2'-3"	10	1'-10"	7"	2'-3"	2'-7"	2'-9"
2'-6"	11	2'-0"	7½"	2'-8"	3'-1"	3'-4"
3'-0"	14	2'-7"	11"	3'-10"	4'-5"	4'-10"
3'-11"	18	3'-5"	1'-3"	6'-3"	7'-6"	8'-2"

*Note:
Lc + (r + db) and including 0.75 modification factor for reinforcement enclosed within a spiral per LRFD 5.11.2.2.2

TENSION DEVELOPMENT LENGTH HOOKED BARS			
BAR SIZE	"A"	BASIC TENSION DEVELOPMENT (length for hooked bars ℓdh	MODIFIED TENSION "L" ** 0.7 ℓdh
6	1'-0"	10"	7"
7	1'-2"	1'-1"	9"
8	1'-4"	1'-5"	1'-0"
9	1'-7"	1'-9"	1'-3"
10	1'-10"	2'-3"	1'-7"
11	2'-0"	2'-9"	1'-11"
14	2'-7"	3'-11"	2'-9"
18	3'-5"	7'-0"	4'-11"

**Note:
#11 bars and smaller, adequate side and hook extension cover per LRFD 5.11.2.4.2

Figure 1.5.5.1.10

1.5.5.1.11 Welded Splices and Mechanical Connections

When field welding of reinforcing steel is anticipated, use ASTM A 706 reinforcing steel. Welding of ASTM A615, Grade 60 reinforcing steel is not permitted without prior approval from the ODOT Welding Engineer.

Welding of ASTM A706 for splices for column spiral reinforcing is permitted.

Use approved mechanical splices for #14 and #18 vertical column bars. Stagger splices as shown below, to avoid adjacent bars being spliced in the same plane.

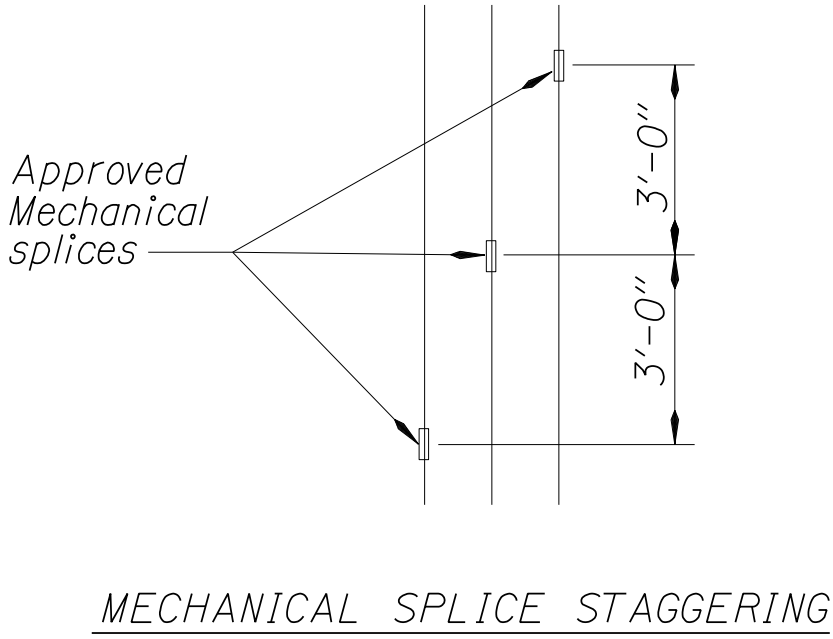

Figure 1.5.5.1.11

Show lap splices on structure plans with the option of approved mechanical splices available to the contractor.

Special cases such as steel in back walls of abutments of post-tensioned concrete bridges and splicing reinforcement in existing structures may require the use of mechanical splices.

1.5.5.1.12 *Lap Splices – GRADE 60

Ratio of A_s provided/ A_s required	Percent of A_s Spliced with Required Lap Length		
	50	75	100
≥ 2	A	A	B
< 2	B	C	C

* Class A splices (1.0 l_d)			
Bar #	f'c =3.3 ksi	f'c =4.0 ksi	f'c =5.0 ksi
3	1’-0”	1’-0”	1’-0”
4	1’-0”	1’-0”	1’-0”
5	1’-3”	1’-3”	1’-3”
6	1’-7”	1’-6”	1’-6”
7	2’-1”	1’-11”	1’-9”
8	2’-9”	2’-6”	2’-3”
9	3’-6”	3’-2”	2’-10”
10	4’-5”	4’-0”	3’-7”
11	5’-5”	4’-11”	4’-5”

* Note: Increase lengths for epoxy coated bars per LRFD 5.11.2.1.2.

* Class B splices (1.3 l_d)			
Bar #	f'c =3.3 ksi	f'c =4.0 ksi	f'c =5.0 ksi
3	1’-0”	1’-0”	1’-0”
4	1’-4”	1’-4”	1’-4”
5	1’-8”	1’-8”	1’-8”
6	2’-0”	2’-0”	2’-0”
7	2’-9”	2’-6”	2’-4”
8	3’-7”	3’-3”	2’-11”
9	4’-6”	4’-1”	3’-8”
10	5’-9”	5’-2”	4’-8”
11	7’-0”	6’-4”	5’-8”

* Note: Increase lengths for epoxy coated bars per LRFD 5.11.2.1.2.

* Class C splices (1.7 l_d)			
Bar #	f'c =3.3 ksi	f'c =4.0 ksi	f'c =5.0 ksi
3	1’-4”	1’-4”	1’-4”
4	1’-9”	1’-9”	1’-9”
5	2’-2”	2’-2”	2’-2”
6	2’-7”	2’-7”	2’-7”
7	3’-7”	3’-3”	3’-0”
8	4’-8”	4’-3”	3’-9”
9	5’-11”	5’-4”	4’-9”
10	7’-6”	6’-9”	6’-1”
11	9’-2”	8’-4”	7’-5”

* Note: Increase lengths for epoxy coated bars per *LRFD 5.11.2.1.2*.

Figure 1.5.5.1.12

1.5.5.1.13 Development of Flexural Reinforcement

The added length, "X", is to provide for unanticipated loading conditions or shifting of the moment diagram due to shear cracking.

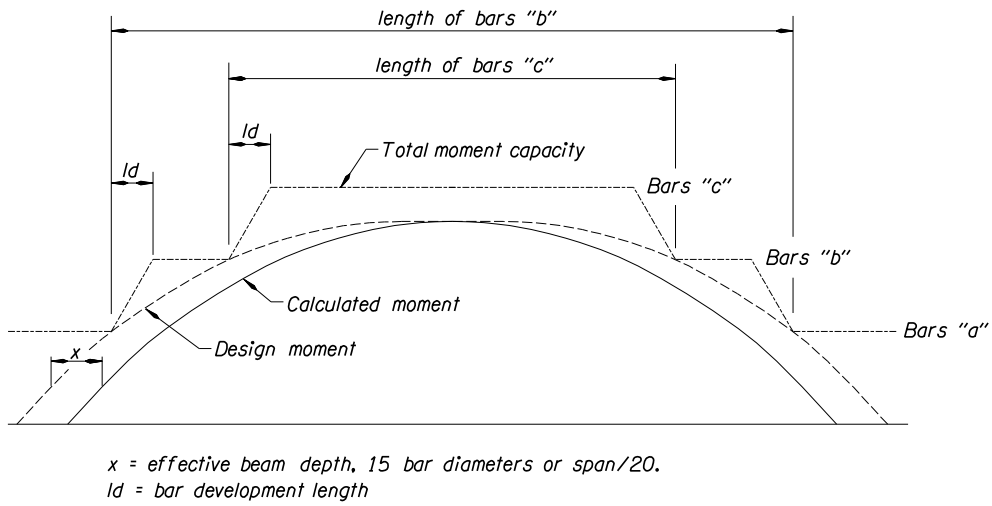

Figure 1.5.5.1.13

1.5.5.1.14 Distribution of Flexural Reinforcement

For moderate exposure conditions, use $\gamma_e = 1.0$. For severe exposure conditions such as structures subject to the effects of sea spray, deicing chemicals or other corrosive environments, use $\gamma_e = 0.75$. In decks, use $\gamma_e = 1.0$.

1.5.5.1.15 Bundled Bars

Tie bundled bars with No. 9, or heavier, wire at 4'-0" maximum centers. Bundled #14 or #18 bars should not be used without the approval of the Supervisor.

When bundled bars are used in columns, the minimum clear distance between bundles is 2.5 times the diameter of the largest bar in a bundle.

Bundled bars preferably should not be used in bridge decks. If they are so used, increase the thickness of the deck by the diameter of the bar throughout the length where bundling is used.

1.5.5.1.16 Headed Reinforcement

Headed reinforcement can be used to reduce congestion or reduce development length over a standard hook. Headed reinforcement will always require less development length compared to a standard hook.

Headed rebar is only available for ASTM A 706 and ASTM A 615 applications. It is not available for stainless steel applications. The cost of headed rebar will generally exceed that of a standard hook. Therefore, they should only be used where the benefit of reduced congestion and/or shorter development length is significant.

Do not use headed reinforcement where their use will reduce concrete cover below the minimum required. For this reason, it may be necessary to use standard hooked bars in the corners of a rebar cage that otherwise contains headed bars.

Bars which require headed reinforcement should be designated on the plans. The 00530 boiler plate special provision requires headed reinforcement to meet ASTM A 970. It also requires headed reinforcement products be selected from the ODOT Qualified Products List (QPL). Therefore, there is no reason to say anything other than "headed bar" on the plans.

Heads may be square, rectangular, round or. Minimum head size for square and round heads are provided below. Rectangular and oval head area must exceed 10 times the bar area.

Minimum Head Size for Headed Reinforcement		
Bar Size	Min. Width for Square Heads (in)	Min. Diameter for Round Heads (in)
4	1-1/2	1.6
5	1-3/4	2.0
6	2-1/8	2.3
7	2-1/2	2.7
8	2-3/4	3.1
9	3-1/8	3.5
10	3-1/2	4.0
11	4	4.4
14	4-3/4	5.3

Figure 1.5.5.1.16A

Headed reinforcement will not require project testing. Testing is required as part the QPL approval process. Q/C testing by the manufacturer is also required by ASTM A 970.

When proposed by a Contractor, headed reinforcement meeting the minimum head size requirement will generally be acceptable as a direct replacement for standard hooks, except where the head will not allow the required minimum concrete cover.

Use the following minimum development lengths for headed reinforcement.

Development Length for Headed Reinforcement, Fy = 60 ksi			
Bar #	f'c =3.3 ksi	f'c =4.0 ksi	f'c =5.0 ksi
4	6"	5"	5"
5	7"	6"	6"
6	8"	8"	7"
7	10"	9"	8"
8	1'-0"	10"	9"
9	1'-6"	1'-2"	10"
10	1'-10"	1'-6"	11"
11	2'-1"	1'-8"	1'-0"
14	3'-0"	2'-4"	1'-3"

* Note: Increase lengths for epoxy coated bars per *LRFD 5.11.2.1.2*.

Figure 1.5.5.1.16B

The modification factors and tie requirements in *LRFD 5.11.2.4.2 and 5.11.2.4.3* should also be applied to headed reinforcement.

Place adjacent headed bars at a minimum spacing of $6*d_b$. Spacing less than $6*d_b$ can be used if heads from adjacent bars are spaced longitudinally (along the length of the bar) a minimum of $8*d_b$ as shown in *Figure 1.5.5.1.16C*.

When bundled bars are used, one bar in the bundle may be terminated using headed rebar. Terminate other bars in the bundle using standard hooks as shown in *Figure 1.5.5.1.16C*.

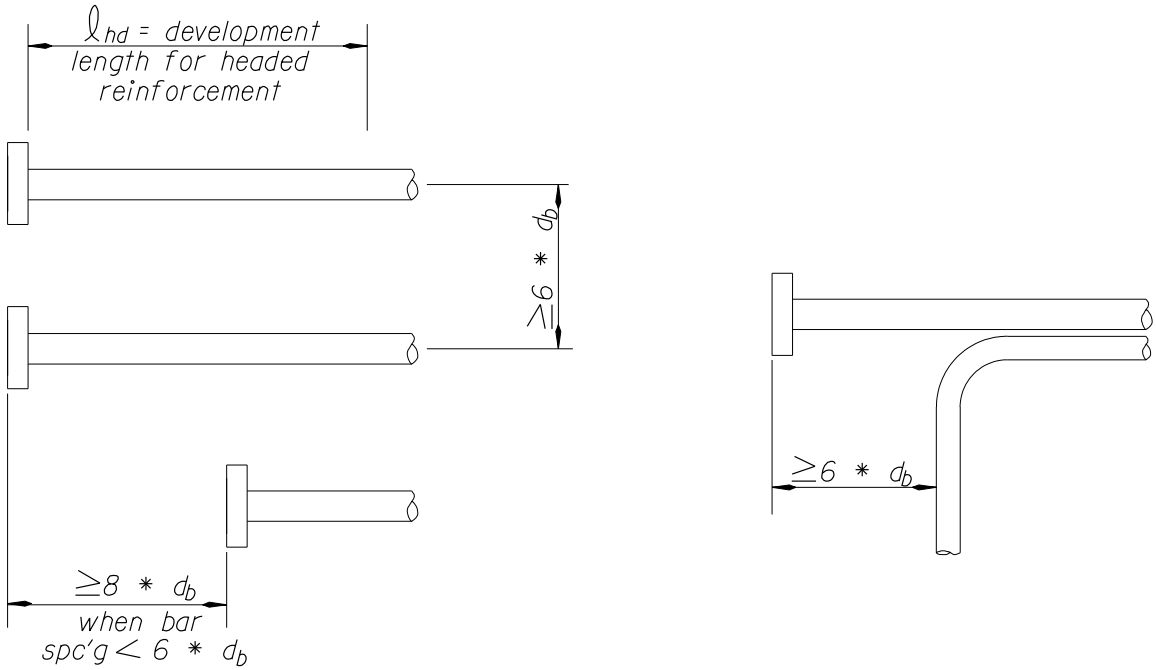

Figure 1.5.5.1.16C

Use of headed reinforcement can result in high concrete compressive stresses under the bar head. Consider the load path for head compression loads and provide distribution steel perpendicular to a headed bar to ensure satisfactory distribution of compressive stresses. The following articles may be useful to understand the load distribution of headed bars:

- *Strut-and-Tie Models for Headed Bar Development in C-C-T Nodes*, Chun and Hong, ACI Structural Journal, Vol. 106, No. 2, March-April 2009, pg. 123-130.

- *Investigation of Dispersion of Compression in Bottle-Shaped Struts*, Sahoo, Singh and Bhargava, ACI Structural Journal, Vol. 106, No. 2, March-April 2009, pg. 178-186.

LRFD 5.11.3 allows for mechanical devices as anchorage. Headed rebar meeting or exceeding the size required by ASTM A 970 has been extensively tested. A summary of such testing can be found in Texas Research Report 1855-1, *"Anchorage Behavior of Headed Reinforcement Literature Review"*, May 2002. This document is available for download on the web at:

http://www.utexas.edu/research/ctr/pdf_reports/1855_1.pdf

The minimum development lengths for headed reinforcement are based on the greater of:

- 50% of the equivalent hooked bar development length
- Calculations using a combination of head bearing capacity and bar development

Development length calculations were based on concrete bearing capacity under the head plus additional straight bar development length as required to fully develop the yield strength of the bar. The concrete bearing capacity was taken from *LRFD equation 5.7.5-2* and was adjusted using a resistance factor of 0.7 for bearing on concrete per *LRFD 5.5.4.2.1*. Some of the proposed development lengths were increased to provide reasonable transitions between different bar sizes.

ACI 318 allows headed reinforcement, but requires a development length equal to 75 percent of the equivalent hooked bar development length. We believe this is overly conservative for bridge applications.

The following chart illustrates the difference between ODOT and ACI development length requirements.

Development Length for Headed Reinforcement, Fy = 60 ksi

f'c	3.3 ksi			4.0 ksi			5.0 ksi		
	Calc	ODOT	ACI	Calc	ODOT	ACI	Calc	ODOT	ACI
#4		6"	7.8"		5"	7.1"		5"	6.4"
#5	4"	7"	9.8"	2"	6"	8.9"	0"	6"	8.0"
#6	8"	8"	11.8"	6"	8"	10.7"	3"	7"	9.6"
#7	10"	10"	13.7"	8"	9"	12.5"	4"	8"	11.2"
#8	12"	12"	15.7"	9"	10"	14.3"	3"	9"	12.7"
#9	18"	18"	17.7"	14"	14"	16.1"	7"	10"	14.4"
#10	22"	22"	19.9"	18"	18"	18.1"	9"	11"	16.2"
#11	25"	25"	22.1"	19"	20"	20.1"	7"	12"	18.0"
#14	36"	36"	26.6"	28"	28"	24.1"	12"	15"	21.6"

Development length controlled by 50 percent of equivalent hooked bar development length

Development length based on ODOT calculations, but less than ACI development length

Development length based on ODOT calculations and exceeds ACI development length

ACI development length = 75 percent equivalent hooked bar development length

Calc = Calculated development length from combination of head capacity and bar development

Figure 1.5.5.1.16D

For concrete strengths above 5.0 ksi, the required minimum development length for headed reinforcement can be calculated using 50 percent of the equivalent hooked bar development length.

1.5.5.1.17 ASTM A706 Grade 80 Reinforcement

ASTM A706 Grade 80 reinforcement is available on the market and is acceptable for use on ODOT bridges. When using A706 Grade 80 reinforcement, the design yield strength is 80 ksi.

The cost premium for A706 Grade 80 reinforcement is approximately 5 cents per pound over Grade 60.

Do not use A706 Grade 80 reinforcement in members designed for plastic seismic performance (such as bridge columns). Although A706 Grade 80 reinforcement has similar ductile properties compared to A706 Grade 60, testing of full-scale seismic models sufficient to satisfy AASHTO concerns has not yet been completed.

Local steel mills (Cascade Steel) requires a minimum order of 90 tons to make A706 Grade 80 reinforcement and a minimum order of 24 tons for each bar size with standard cut lengths.

Normally it requires a multi-span structure to have sufficient quantity in selected sizes to meet the minimum order quantity required by steel mills. The following are areas where use of A706 Grade 80 reinforcement might be warranted:

- Bridge decks – When Grade 80 reinforcement is used in a bridge deck, use it for both longitudinal and transverse bars. Do not mix Grade 80 and Grade 60 within the same bridge deck. Ensure all deck design requirements for project specific designs given in *BDDM 1.9.1* are satisfied. Assuming a typical deck with approximately 5 pounds of deck steel per square foot of deck, the minimum deck area required to meet the minimum order of 24 tons is about 79,600 square feet. If different bar sizes are used in transverse and longitudinal directions, the minimum deck area will be much larger.

- Drilled shafts – Use of Grade 80 reinforcement reduces cost and congestion in drilled shafts thereby making them more constructible. Drilled shafts are designed for elastic seismic performance and so there would typically be no concern with the seismic performance. If there is sufficient quantity to meet the minimum order, Grade 80 reinforcement can also be used for lateral confinement in drilled shafts.

- Crossbeams & End beams – Use of Grade 80 reinforcement can reduce cost and congestion in negative and positive moment areas of crossbeams and end beams. Even if the same bar size is used for both negative and positive moment areas, the minimum order quantity will normally be met only on a large multi-span bridge. Use of Grade 60 reinforcement for temperature steel and stirrups is acceptable for these applications.

Splice lengths and development lengths for Grade 80 rebar are longer compared to Grade 60.

Couplers are available on the market for Grade 80 reinforcement. These couplers are capable of meeting 125 percent of yield strength. This is less than required by current specifications (*SP 02510.20*) which require couplers to meet 135 percent of yield strength. However, for the proposed applications above, 125 percent of yield strength provides satisfactory performance. A project specific change to *SP 02510.20* is required when ASTM A706 Grade 80 bars are used. Note also that the ODOT Materials Lab has the capability to test Grade 80 couplers.

ASTM A706 reinforcement is weldable. Welding would be needed when A706 Grade 80 reinforcement is used for confinement hoops. The contractor needs to submit a PQR and WPS for approval as is typical for any rebar welding.

1.5.5.2 Bar Lengths

Use stock bar lengths whenever possible without sacrificing economy. Unless absolutely necessary, don't call for bars longer than 60 feet because they are difficult to handle and transport.

Bar Size	Stock Length *
3	20’ & 40’
4 and 5	20’, 30’ & 40’
6 thru 18	60’

* Only small quantities of #14 and #18 bars are stockpiled by the supplier because of size and weight and may require special mill orders.

Bar lengths specified include hook lengths unless detailed otherwise.

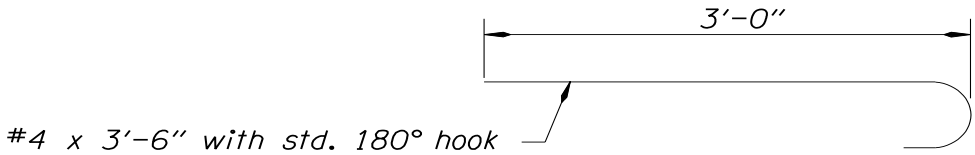

Figure 1.5.5.2A

1.5.5.3 Interim Reinforcement for T-Beams and Box Girders

When the deck slab of a continuous T-beam or box girder is placed after the concrete in the stem has taken its set, place at least 10 percent of the negative moment reinforcing steel full length of the longitudinal beam to prevent cracks from falsework settlement or deflection. In lieu of the above requirement, 2 - #8 bars full length of longitudinal girders may be used.

In concrete crossbeams whose principal negative reinforcement lies in the deck slab, locate a portion of the negative reinforcement in the stem of the crossbeam below the level of the deck slab construction joint. Provide sufficient ultimate reinforcement capacity to support 150 percent of the dead load of the crossbeam and superstructure 5 feet along the centerline of the structure either side of the center of bent. Use no less than 10 percent of the total negative reinforcement.

In cases where the bent crossbeams are skewed to the deck steel, place the top crossbeam steel in the top of the stem below the deck (dropped panel). See the following page for typical details.

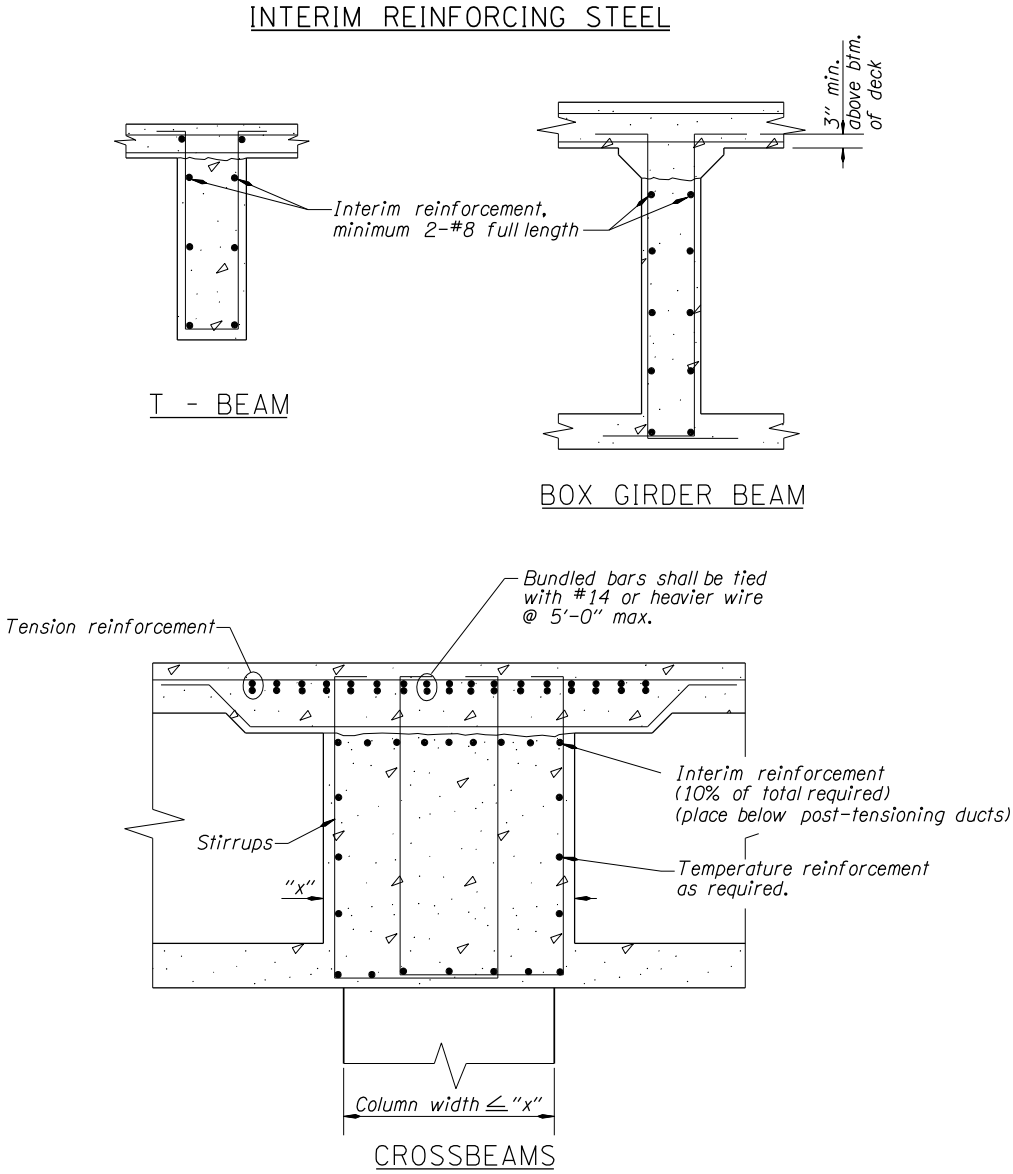

Figure 1.5.5.3A

1.5.5.4 Additional Shear Reinforcement

As shown below, provide additional reinforcement to the calculated shear reinforcement in cantilevered portions of crossbeams. Pay careful attention to clearances and possible conflicts with post-tensioning ducts and other reinforcement. Detail the size and number of bars to provide at least 20 percent of the factored Strength I Limit State shear demand at the face of the column. Apply this provision to cantilevered sections of crossbeams when the crossbeam cantilever from the face of the column exceeds the crossbeam depth at the face of the column. This additional reinforcement may be omitted if the shear reinforcement provided from the critical shear section to the face of column provides 20 percent additional capacity above the controlling strength limit state.

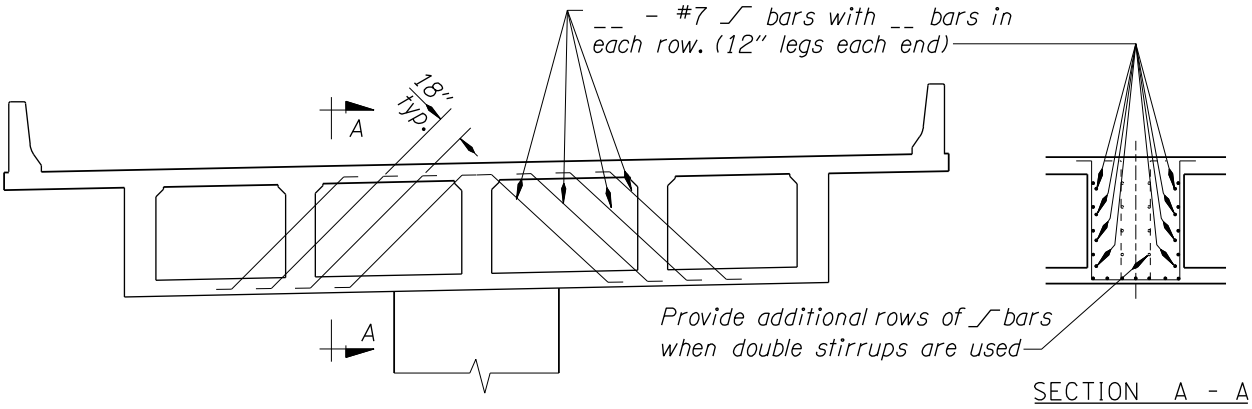

Figure 1.5.5.4

1.5.5.5 Diaphragm Beam Reinforcement

The detail below assumes the deck reinforcement is stopped 6 inches clear of the transverse beams. The added bars provide reinforcement for Beam-D and the deck overhang. If straight bars are used, the spacing of the deck steel will be continuous over the transverse beams and no additional bars will be required.

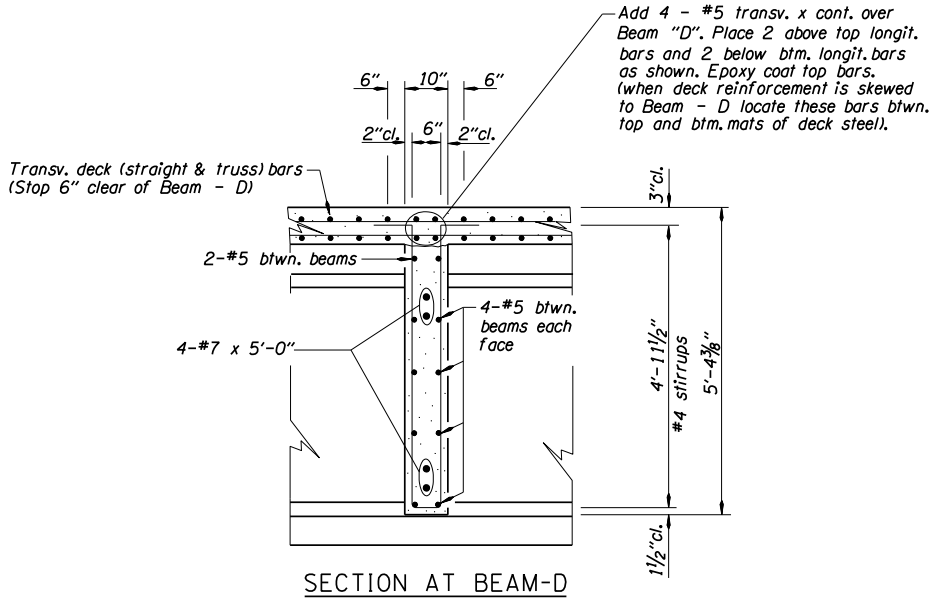

Figure 1.5.5.5

1.5.6 Precast Prestressed Concrete Elements

1.5.6.1 Design of Precast Prestressed Elements

The nature of precast prestressed elements requires special handling in several areas.

Design – General

- Each precast prestressed element is to be designed job specific.
- Deck requirements for NHS routes and routes with 20-year projected ADTT > 1000:
    - Side-by-side slabs and box beams: 5 inch minimum HPC thickness with a single mat of reinforcement (8 inch maximum centers each way). 7 inch minimum thickness for any portions overhanging the exterior slab or box beam.
    - Side-by-side Bulb-T and deck Bulb-T girders: 7-1/4 inch minimum HPC thickness with two mats of reinforcement (8 inch maximum centers in each mat and each direction). Because of this requirement, deck Bulb-T girders will generally be used only on low-volume routes.
    - Spread slabs and box beams: 8 inch minimum HPC thickness with two mats of reinforcement (8 inch maximum centers in each mat and each direction).
    - Bulb-T (not side-by-side) and Bulb-I girders: 8 inch minimum HPC thickness (see *BDDM 1.9.1*).
- Deck requirements for non-NHS routes and routes with 20-year projected ADTT < 1000:
    - Side-by-side slabs and box beams: 3 inch minimum asphalt concrete wearing surface with membrane waterproofing or 5 inch minimum HPC thickness as specified above.
    - Side-by-side Bulb-T and deck Bulb-T girders: 3 inch minimum asphalt concrete wearing surface with membrane waterproofing or 7-1/4 inch minimum HPC thickness as specified above.
    - Spread slabs and box beams: 8 inch minimum HPC thickness with two mats of reinforcement (8 inch maximum centers each way).
    - Bulb-T (not side-by-side) and Bulb-I girders: 8 inch minimum HPC thickness (see *BDDM 1.9.1*).
- HPC decks must be cast-in-place, unless full-depth precast panels are used with either longitudinal post-tensioning or ultra-high performance concrete closures.

Note: ADTT = ADT x %trucks. The 20-year ADT volume should be in the project prospectus. The %trucks can be determined by locating the nearest Permanent Automatic Traffic Recorder (ATR) station. This information is kept by the Transportation Data Section under the Transportation Development Division and can be found at the following website:

http://egov.oregon.gov/ODOT/TD/TDATA/tsm/tvt.shtml

From this website, go to “Permanent Automatic Traffic Recorder Stations (ATR’s) Trend Summaries” and select the latest year.

If a prospectus is not available, if the 20-year ADT is not shown and/or if an appropriate ATR cannot be found, contact the Project Leader or Contract Administrator.

- Concrete Strength – Concrete design compressive strengths should not be higher than actual design requirements. List the required concrete strengths in the General Notes.

- The allowable range of design compressive strengths of concrete at 28 days (f'_c) to be used are:

	Minimum	Maximum
for precast, prestressed slabs and box beams	4000 psi	7000 psi
for precast, prestressed girders, and integral deck girders	5000 psi	9000 psi

  When precast, prestressed members are used without a cast-in-place deck, the 28-day compressive strength is limited to 6000 psi. This limitation is required to ensure adequate air entrainment and to ensure adequate workability. Higher strength concretes generally are less workable and therefore are more difficult to achieve an acceptable finish suitable for a riding surface. If a separate concrete mix (6000 psi or less) is used for the top flange, then higher strengths (up to 9000 psi) may be used for the remainder of the member.

- The allowable range of design compressive strengths of concrete at release of prestress (f'c) to be used are:

	Minimum	Maximum
all precast, prestressed members	4000 psi	7000 psi

- Do not exceed the compressive strengths listed above without an approved exception from the State Bridge Engineer.

  - Concrete Tensile Stress Limits:
    - 3 * sqrt(f'c), where f'c is in psi.
    - Modify *LRFD Table 5.9.4.1.2-1* as follows:
      - Modify the 9th bullet to 0.0948 * sqrt(f'c), where f'c is in ksi.
      - "No Tension" criteria in 6th and 8th bullets still apply.
    - Modify *LRFD Table 5.9.4.2.2-1* as follows:
      - Modify the 1st and 8th bullets to 0.0948 * sqrt(f'c), where f'c is in ksi.
      - "No tension" criteria in 3rd, 5th and 7th bullets still apply.
    - Simple-Span Girders Made Continuous for Live Load – When precast girders are made continuous for live load, design the positive moment area as if the girder was simply-supported. A maximum concrete tensile stress up to 6*sqrt(f'c) in the positive moment area will be allowed for this condition. Also ensure that the maximum concrete tensile stress in the positive moment area does not exceed 3*sqrt(f'c) when the girder is considered continuous for live load.

- Prestress Losses – Calculate prestress losses in precast members according to *LRFD 5.9.5.4* – Refined Estimates of Time-Dependent Losses. This method of calculating losses is the "Detailed" method presented in NCHRP Project No. 18-07.

  Do not include the prestress gain due to application of live load in the total long-term loss calculation.

An Excel spreadsheet for calculating prestress losses using the NCHRP 18-07 methods is available from the Bridge Engineering Section. This spreadsheet includes multiple methods for calculating prestress losses. Use the "Detailed" method.

Prestress loss estimates by past ODOT bridge designers have generally been in the 35 to 45 ksi range. The *LRFD 5.9.5.4* loss calculations appear to be consistent with earlier loss predictions. And these loss levels have resulted in relatively accurate predictions of camber at the time of deck placement. There has also been no record of service cracking in bridges designed using these prestress loss levels.

Prestress gain due to application of live load can be more than 20 percent of the total prestress loss. ODOT's policy of not including this gain results in a conservative estimate of final girder stresses. Because of this, an accurate estimate of prestress losses is preferred rather than a conservative estimate. Note also that prestress loss affects girder stress, but does not change the ultimate strength or capacity to carry permit loads.

Transforming the prestressing strand to increase section properties is not recommended. The Eriksson PSBEAM program allows this to be done by simply checking a toggle. As stated in NCHRP 18-07, prestress losses should be calculated differently (no elastic losses or gains) when transformed properties are used for the prestressing strand. If so, the final girder stresses will be approximately the same whether gross or transformed section properties are used. Therefore, there is no significant advantage in using transformed section properties.

- Girder Shape Selection

General – The Oregon Bulb-T girder shape is preferred for most Oregon bridge applications. This shape has a 4 foot wide top flange. This top flange provides safety for workers who must form bridge decks and ensures stability of the girder during shipping. Use Bulb-T girder shapes whenever it is appropriate to do so.

Bulb-I girders are a standard variation of the Bulb-T. To make a Bulb-I, the fabricator will start with the Bulb-T form and add blockouts to portions of the top flange to make the Bulb-I shape. Use the Bulb-I shape only when it has benefits over a Bulb-T. Since Bulb-I girders have a narrow top flange, it requires less concrete build-up over the girder compared to a Bulb-T. Therefore, bridges with high superelevation (say, greater than 7 percent) may be candidates for the Bulb-I shape.

Since the Bulb-I section is 3 inches taller than the equivalent Bulb-T, it may be preferred for span lengths slightly past the equivalent Bulb-T capability. A Bulb-I section may provide benefits over a deeper Bulb-T section. However, due to shipping stability and worker safety concerns, a deeper Bulb-T might still be preferred if the deeper section can be accommodated within the available vertical clearance.

Modified Bulb-T girders include those having a non-standard top flange width and those having a wider web. Fabricators are generally able to adjust the top flange width anywhere from 24 inches to 48 inches. At least 3 inches can also be added to the top flange. Designers should discuss any modifications to the top flange with Oregon fabricators before placing modified details on plan sheets. Design deviations are not required for top flange modifications.

Web thickness should only be adjusted when necessary to accommodate post-tensioning (such as for spliced girders). For such cases, increase the web thickness from 6 inches to 7.5 inches. When doing so, the top and bottom flange widths will also be increased by the same amount.

BT90 & BT96 girder sections are the largest in the Oregon inventory. These sections have a 5 foot wide top flange which is necessary to ensure shipping stability of very long girders. Do not consider changes to the top flange width without concurrence from Oregon fabricators. The longest girder available from Oregon fabricators is around 185 feet total length. Verify availability for any girder length exceeding 180 feet.

BT96 girders have not yet been used in Oregon. Verify availability of this section before specifying it on a project.

AASHTO Type II, Type III, Type IV, and Type V shapes do not have the same efficiency as Bulb-T shapes. Therefore, Bulb-T shapes should be used in most cases. Use of AASHTO shapes is generally limited to bridge widenings where the existing bridge has AASHTO shapes. There may also be rare cases when an AASHTO shape may provide slightly less vertical clearance compared to the available Bulb-T shape.

WSDOT Shapes – Obtain approval of a design deviation before specifying a standard WSDOT shape on an Oregon project. Approval of design deviations will generally only be considered where there is no equivalent Oregon section to meet an application. The standard specifications allow contractors to propose an alternate shape provided it is similar to the specified shape and meets all project requirements (see *SP 00550.03*). However, the original contract plans must use Oregon shapes.

Spliced Girders with post-tensioning can be used to extend span capabilities of precast concrete girders. Consult with Oregon fabricators regarding the appropriate section and segment lengths for spliced girder applications.

Haunched Girders should only be considered after consultation with Oregon fabricators. Although haunches may provide an aesthetic benefit, any structural benefit from haunching a prestressed girder is minimal.

Trapezoidal Box Girders are available for applications that require special aesthetic considerations. Trapezoidal box girders can either have a uniform depth or parabolic haunches. Horizontally curved trapezoidal boxes have been used in Colorado.

Strand Type – Bulb-T and AASHTO girders were developed for use with 0.5 inch diameter prestressing strand. Do not consider use of 0.6 inch diameter strand for these sections without first consulting with Oregon fabricators. Modification of the girder section may be needed to accommodate 0.6 inch strand. BT90/96 sections were developed for use with 0.6 inch strand.

Shipping – When selecting the appropriate girder type, review potential shipping routes to make sure the proposed girder type can be shipped to the bridge site. Narrow roads and sharp curves may restrict the length of girder that can be used. Our Oregon fabricators can generally provide assistance in this analysis.

Oregon Fabricators – The following northwest precast concrete fabricators can provide precast concrete members to Oregon bridge projects:

- Baker Rock, McMinnville
- Central Premix, Spokane, WA
- Concrete Tech, Tacoma, WA
- Knife River, Harrisburg

- Detailing – General
    - Camber - See *BDDM 1.5.9* for special requirements pertaining to ACWS, sidewalk, and rail requirements.

- Deck Drainage - See *BDDM 1.24* for details specific to slab and box beam elements.

- Girder Storage and Shipment - See *SP 00550.49* prohibits transportation before 7 days and only after the 28-day compressive strength has been achieved. There may be special construction circumstances when a member needs to be transported and placed before the 7 days, but it should not be allowed before the 28-day compressive strength has been achieved.

  Delaying transportation and placement of the member beyond the 7 days should be specified only if absolutely required by design. A longer placement delay would be appropriate, if the design required additional long-term shrinkage and creep to have occurred prior to fixing or encasing the beam ends.

- Skew - Limit skew to 45 degrees for precast slabs and 30 degrees for precast boxes. Excessively skewed slabs and boxes tend to warp more, making fit and obtaining uniform bearing on the bearing pads more difficult. Stair stepping the bearing pads may be necessary to obtain uniform bearing.

- Stage Construction of Slabs and Boxes with cast-in-place HPC decks – Do not use side-by-side slabs or boxes with HPC decks when precast elements must be placed in stages. Such stage construction does not allow tie rods to be placed as detailed in *BR445*. Spread slabs or boxes with a 7-1/4 inch minimum deck thickness (two mats of deck steel) would be an acceptable option for bridges constructed in stages.

- Transverse Connection for Side-by-Side Slabs and Boxes – Connect side-by-side slab and box elements with transverse tie rods as detailed on *BR445*. Alternate connection details, such as intermittent weldments, are not allowed.

- Surface Finish for Precast Members - The standard specifications requires a light broom finish on the tops of members having an asphalt wearing surface and a roadway finish for members having an HPC deck. A roadway finish combined with extending stirrup legs up into the deck should provide adequate capacity to ensure composite action between the girder and deck. It is not necessary to require additional roughening.

- Interface Shear – For all members with a cast-in-place deck, provide interface shear reinforcement full length of the member regardless of whether or not it is required by design. This requirement is satisfied by extending stirrups from the precast member up into the deck slab and will result in minimum reinforcement across the interface shear plane equal to two #4 bars at 18 inch centers.

- Joint and Keyway details - see standard drawings for recommended details.

- See *Appendix 1 Figures* for other typical details.

1.5.6.2 Design and Detailing of Precast Prestressed Girders

1.5.6.2.1 Stay-in-Place Forms

Where the spacing between edges of precast concrete girder flanges is no greater than 2 feet, steel stay-in-place deck forms may be used. However, do not use stay-in-place forms in exterior bays.

Steel stay-in-place deck forms may also be used behind end beams where the deck is continuous over interior bents. Hot-dip galvanize all steel stay-in-place forms.

If stay-in-place deck forms are allowed, provide a minimum section modulus of 0.15 $in^{3/}ft$ and a maximum form height of 1.5 inches. Install stay-in-place forms such that the top of the form is at the design bottom of deck thickness. The weight of a form meeting these requirements is likely to be less than 2 psf. This weight is not significant and need not be included in the design. However, add 10 psf additional non-composite dead load in the girder design to account for extra concrete weight.

Do not use stay-in-place forms at deck overhang areas or where the edges of girder flanges are greater than 2 feet apart. In such cases, access for inspection and future maintenance of the deck precludes the use of stay-in-place deck forms.

Do not use stay-in-place forms in coastal areas.

These provisions apply to precast girders, slabs and boxes.

Where stay-in-place forms are considered, add the following statement with the loading section of the general notes:

“Stay-in-place deck forms may be used except for exterior overhangs and between the exterior girder and the first interior girder on each side of the structure. XX psf additional non-composite dead load has been included in the girder design to account for extra concrete and form weight associated with stay-in-place forms.”

1.5.6.2.2 Diaphragm Beam Restraint

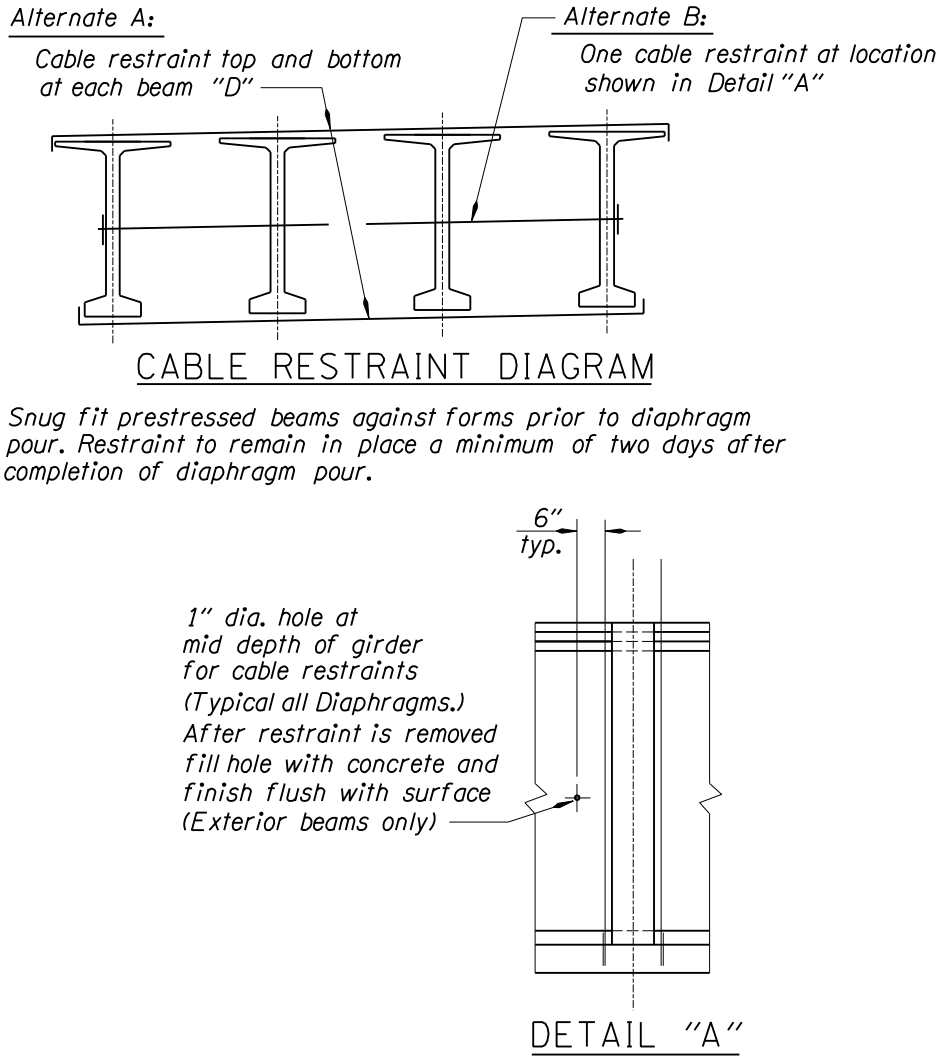

Figure 1.5.6.2.2

1.5.6.2.3 Beam Seat or Top of Crossbeam Elevation

A note on the plans should indicate if the beam seat (or top of crossbeam) elevations shown are for deck buildups based on three months camber. Adjust the beam seat (or top of crossbeam) elevations during construction to correct for the revised deck buildups.

1.5.6.2.4 Continuous Deck Reinforcement

Provide additional deck reinforcement for bridges composed of precast simple span elements with continuous deck as shown below. This detail does not apply to bridges made continuous for live load. When girders are made continuous for live load, the deck reinforcement must resist the negative moments generated. The result will be substantially more deck steel than the detail below. NCHRP Report 519 provides design examples for girders made continuous.

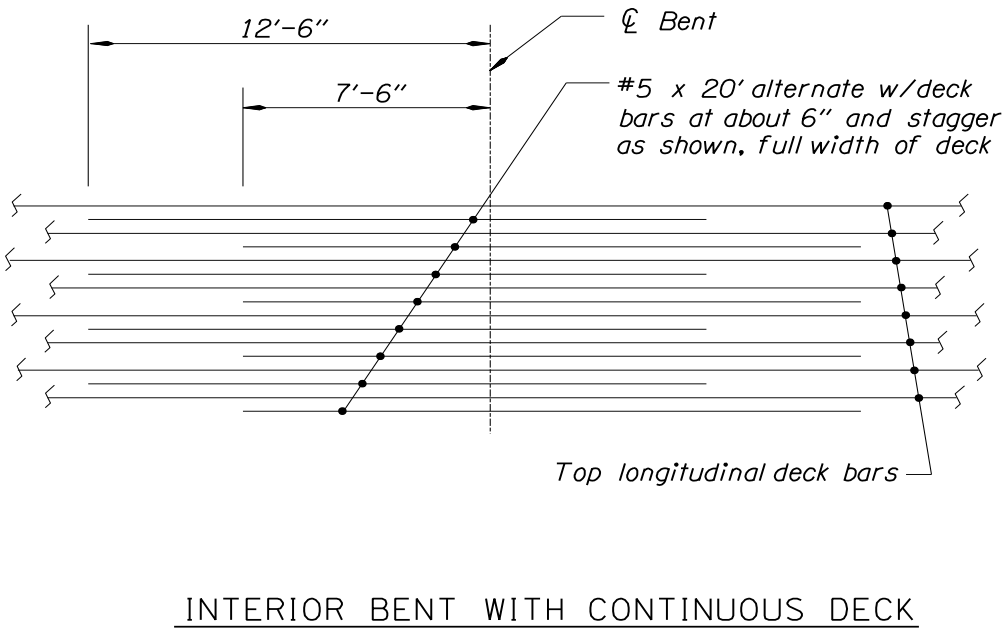

Figure 1.5.6.2.4

1.5.6.2.5 Beam Stirrups

Bulb-T and Bulb-I standard drawings show stirrups with 90 degree shop bent hooks at the top of the girder. These hooks must protrude at least 3 inches above the bottom of the deck. If they do not, because of excessive build-up, the standard drawing requires the use of "U" bars to fill the gap.

There is no need for the stirrup hooks or "U" bars to extend to the top mat of deck reinforcement, as has been shown in the past. Details on the plans should reflect these requirements.

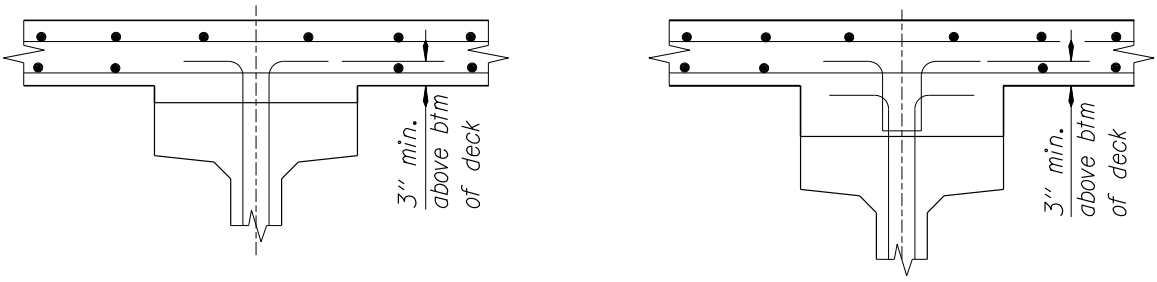

Figure 1.5.6.2.5

1.5.6.2.6 Structure Widenings, Precast Beam Bridges

Detail connections between superstructures to prevent widening dead loads from being transferred to the existing beams. This may be accomplished by delaying the connection pour (diaphragm and deck) until most of the dead load is applied to the widening. The designer chooses the appropriate placement method.

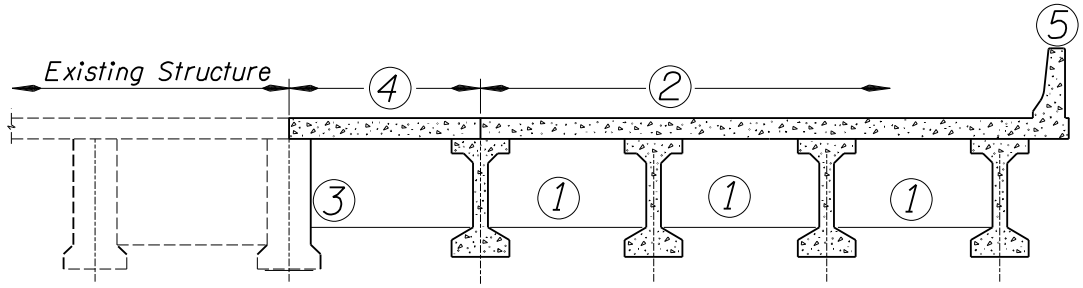

CLOSURE POUR METHOD

POUR SCHEDULE
(INCLUDING CLOSURE POUR)

1. Make pour in diaphragms
2. Make pour in deck slab. Delay pour 2 a min. of 3 days after pour 1.
3. Make pour in diaphragm of closure pour section.
4. Make pour in deck slab of closure pour. Delay a minimum of 3 days after pour 3.
5. Make pour in bridge rail.

Figure 1.5.6.2.6A

Note: In the above closure pour method, the deck screed machine would normally be placed or supported on the widening beams. As the concrete is placed, the beams tend to deflect equally. This equal deflection normally gives better control of deck thickness and deck steel cover.

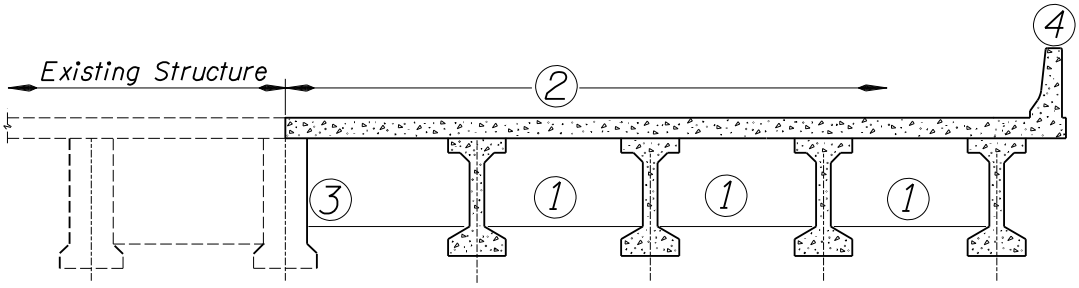

DELAYED DIAPHRAGM POUR METHOD

POUR SCHEDULE

1. Make pour in diaphragms
2. Make pour in deck slab. Delay pour 2 a min. of 3 days after pour 1. Blockout deck as required to make pour 3.
3. Make pour in diaphragm closure a minimum of 3 days after pour 2.
4. Make pour in bridge rail.

Figure 1.5.6.2.6B

Note: In the above delayed diaphragm pour method, the deck screed machine rails would normally be placed or supported with one rail on the existing structure and one rail on the widening beams. As the concrete is placed, the new beams would tend to deflect more than the existing composite beams. This unequal deflection makes it more difficult to control deck thickness and deck steel cover, especially at the new beam adjacent to the existing structure.

1.5.6.2.7 Deck Pour Sequence

Placement of decks on precast prestressed beams should take place no less than 60 days after stress transfer. This is to allow a majority of the prestress camber to occur, thus enabling more accurate determination of beam build-up for the deck screeding.

1.5.6.2.8 Diaphragm Beams

Use concrete diaphragm beams at span ends and at midspan. Install temporary diaphragms midway between the end and midspan diaphragm beams before pouring the end and midspan diaphragm beams (see *BR350*). Temporary beams may be removed after removing the deck overhang brackets.

1.5.6.2.9 Earthquake Restraint Details

See cost data books for sample plans and details.

1.5.6.2.10 Fixed Girder Connections

Where girder ends are designed with a fixed connection to an end beam or bent cap, embed the girder into the end beam (or bent cap) a minimum of 8 inches. Provide transverse bars/rods through the girder ends as shown on the standard drawings (*BR300 & BR310*). In addition to the above requirements, provide strand extensions and/or dowels at the end of the girder as needed to ensure adequate transfer of loads to the substructure.

1.5.6.2.11 Girder Spacing

Limit girder spacing to 9 feet for girder sections up to BT72 and 1.5 times girder depth for larger girders.

(1) Precast Members topped with ACWS - Side-by-side elements are typically topped with a waterproofing membrane and asphalt wearing surface. This type of construction works well in a stage construction scenario as long as the elements are placed consecutively from one side to the other.

When using this type of construction, the previous stage precast element at the stage construction joint must carry some of the wearing surface dead load from the subsequent stage since adjacent slabs must have their tie rods connected before the wearing surface is placed for the subsequent stage. This additional load is generally ignored (i.e., the members are designed as if they were all placed in one stage). Long term creep is thought to mitigate this condition. To date, annual inspections have found no distress in precast elements due to this practice.

For cases where elements cannot be placed consecutively from one side to the other, it becomes impossible to place standard transverse tie rods. For this reason, select a different structure type (ex., spread slabs or girders with CIP deck) when elements cannot be placed consecutively. Any side-by-side precast slab or box element must be connected to adjacent elements with transverse tie rods as detailed in BR445. Alternate details, such as intermittent weldments, are not allowed.

(2) Precast Members topped with CIP concrete – Side-by-side elements may be topped with an HPC deck. See *BDDM 1.5.6.1* for minimum deck thickness and reinforcing requirements.

For this type of construction, the deck dead load is substantially larger than the ACWS case. For this reason, this type of construction must be detailed to prevent the deck dead load from later stages from being transferred to previous stages.

One solution to this problem is to provide a space (12 to 18 inches) between the stages that is filled with a CIP closure girder which is placed after full deck dead load is applied to both adjacent sections. For this case, design the precast members adjacent to the construction joint as exterior girders. Design the CIP closure girder to carry a contributory portion of live load under the strength limit states.

Use of spread slabs or boxes is another possible solution for stage construction. If so, use 7-1/4 inch minimum deck thickness with two mats of steel as required by *BDDM 1.5.6.1*.

Any side-by-side precast slab or box element must be connected to adjacent elements with transverse tie rods as detailed in *BR445*. Alternate details, such as intermittent weldments, are not allowed.

1.5.7 Cast-In-Place Superstructure

1.5.7.1 General Design

(1) Structure Depths

See *BDDM 3.18.2(2)* for minimum depth and live load deflection requirements.

(2) Computations of Deflections

Base computed deflections on the effective moment of inertia of the section.

Estimate long-term deflections as instantaneous deflection times a factor of 3 for reinforced concrete elements.

1.5.7.2 Interim Reinforcement for T-Beams

See *BDDM 1.5.5.3*.

1.5.7.3 Diaphragm Beam Steel

See *BDDM 1.5.5.5*.

1.5.7.4 Box Girder Stem Flare

Taper changes in girder stem thickness for a minimum distance of 12 times the difference in stem thickness. See Standard Detail *DET3125* for details.

1.5.7.5 Shear Keys and Construction Joints

Normally, shear keys at construction joints are unnecessary. Show construction joints with a roughened surface finish unless shear keys are required and shown on the plans.

At construction joints between the stem and slab of concrete girder bridges, use the following note:

Roughened surface finish. See *SP 00540.43(a)*.

1.5.7.6 Standard Access and Ventilation in Concrete Box Girders

Provide permanent access to all cells of concrete box girders. Access may require using manholes and/or access holes through bottom slabs, diaphragm beams, crossbeams and longitudinal beams. Standard Drawings *BR135* and *BR136* show standard access and ventilation details. See *BDDM 3.19* for additional accessibility guidance.

In addition to the standard drawing for Access Holes, draw a section on the plans normal to the girder through the access hole showing the relationship of the longitudinal stems, utility lines, and crawl holes to the access hole and ladder. If the drawing is to scale, dimensions need not be shown.

Use the following guidelines tempered with engineering judgment.

- Deck Access Holes – Avoid placing access holes through the deck of a structure. There is a potential for the access hole cover to leak. Disruption of traffic and the need for traffic protection and direction should be avoided.

- Bottom Slab Access Holes - Single span bridges will normally require one access hole per cell. Multiple span bridges will normally have one access hole per cell at each end of the bridge. Access holes should be located in accordance with the guidelines shown on the standard drawings. The 8 feet minimum height to the access hole is recommended to discourage unauthorized access into the structure. Keep the inspector in mind when choosing the access locations. Do not place access holes over railroad tracks.

- Girder Stem Access Holes - Girder stem access holes are to be provided through the interior stems at the midpoint of all spans. These lateral access points will allow the inspector to complete their inspection of span or spans without having to exit and reenter the structure.

- Crossbeam Access Holes - These are not detailed on the standard drawing since their design will vary widely because of structural requirements. However, it should be noted that only one access hole will be required per crossbeam if the girder stem access holes are provided.

- Bottom Slab Ventilation Holes - These ventilation holes, similar to the bottom slab access holes in design except top opening, are intended to be used in all cells of each span not having access holes. Generally, the ventilation holes would be located near the opposite end of the span from an adjacent span having access holes. The holes provide additional ports for removing forms, serves as an exhaust hole when forced ventilation is required and provides additional natural ventilation.

- Stem Ventilation Holes - These holes provide for the escape of lighter-than-air gases and are located near the high point of each span as detailed on the standard drawings.

- Ladder Support - The ladder support provides a safe support for the ladder while the inspector unlocks the access hole cover. After the cover is unlocked, the inspector should reposition the ladder through the access hole so they can grab onto the ladder while entering or leaving the box girder cell.

- Access Cover Prop - The access cover prop is designed to facilitate the opening or closing of the cover when the ladder is supported by the Ladder Support. Once the ladder is through the access hole, the prop should be released so the cover will lie flat. The prop would be re-engaged upon exiting the box.

1.5.7.7 Form Removal

All forms are to be removed from cells where access is provided.

Deck forms to be removed may be supported off the bottom slab if the bottom slab is fully supported, designed to support the added load and has no detrimental effect on the structure.

Deck forms for non-accessible cells may be left in place. Deck forms left in place are not to be supported off the bottom slab. Web supported deck forms are acceptable. An allowance for deck form dead load should be included in the design loads.

1.5.7.8 Bottom Slab Details

Generally, show the bottom slab of box girders to be parallel to the top slab in transverse section so that all girder stems will be the same depth.

The thickness of the bottom slab should not be less than 6 inches.

For skewed box girders, orient bottom slab transverse bars the same as the deck transverse bars. See *BDDM 1.9.1* and *LRFD 9.7.1.3* for requirements.

Place a 4" x 4" drain hole through each diaphragm beam at the low point of each cell. Place a 4 inch diameter drain hole through the bottom slab at the low point of each series of cells in a span. For cells that carry water lines, increase 4 inch diameter to 6 inch diameter.

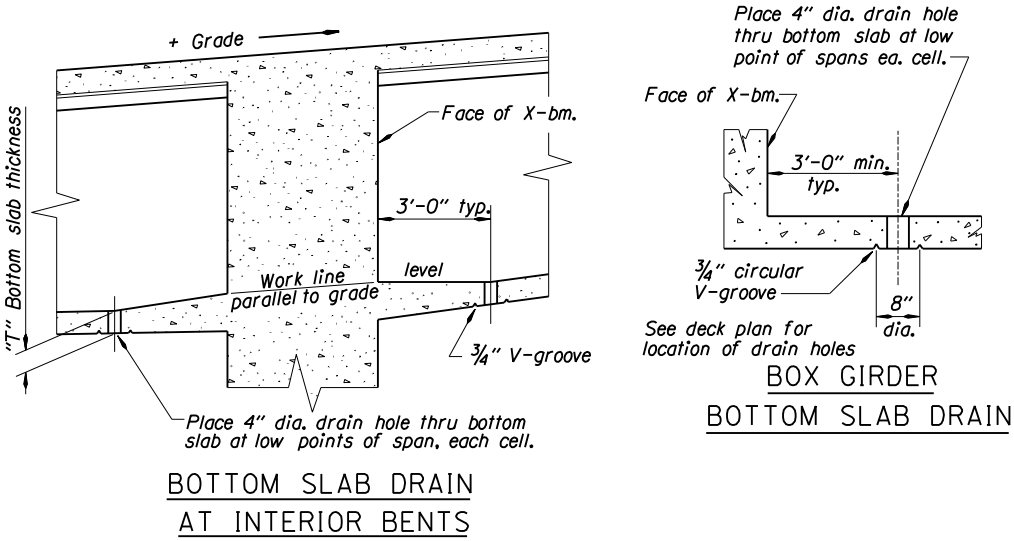

Figure 1.5.7.8

1.5.7.9 CrossBeams

See *BDDM 1.5.5.3* and *BDDM 1.5.5.4*.

1.5.7.10 Fillets

Provide adequate fillets at the intersections of all surfaces within the cell of a box girder, except at the junction of web and bottom flange where none are required.

1.5.7.11 Structure Widenings, Cast-in-Place Superstructures

Connections between superstructures should be detailed to prevent widening dead loads from being transferred to the existing beams. One method is to temporarily support the beam adjacent to the widening during construction. Designate locations where supports are required and expected maximum reactions. An alternate method requires closure pours for the diaphragm and deck slab.

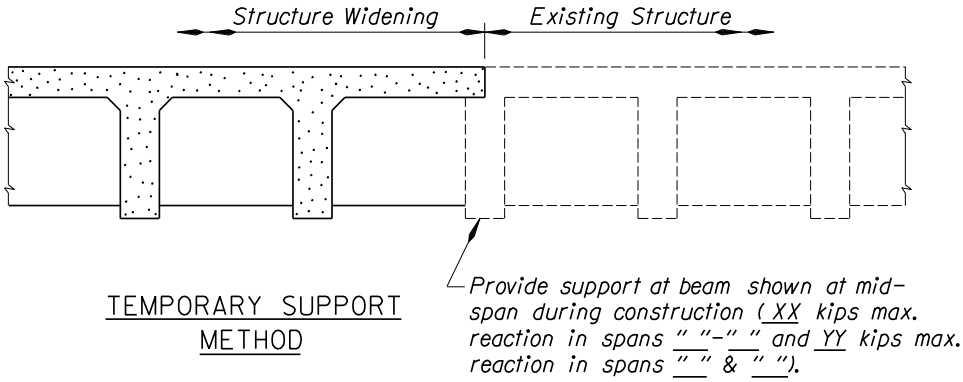

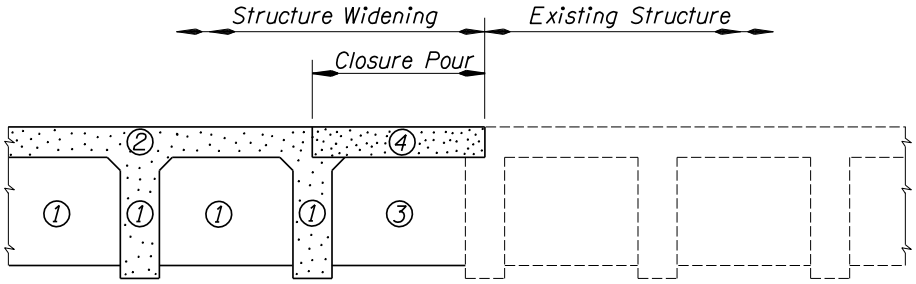

CLOSURE POUR METHOD

POUR SCHEDULE

1. Pour longitudinal beams and diaphragm beams shown to the bottom of the top fillets.
2. Pour 2 includes top fillets and deck slab. Pour 2 to be delayed a minimum of 3 days after pour 1. A deck construction joint may be made over any diaphragm beam. Delay pouring adjacent section of deck a minimum of 36 hours.
3. After falsework removal, pour diaphragm closure section.
4. Make closure pour in deck slab. Delay a minimum of 3 days after pour 3.

Figure 1.5.7.11

1.5.7.12 Stay-in-Place Forms for Deck

For deck construction, stay-in-place forms will not be allowed. Loss of access for inspection and future maintenance of the deck preclude the use of stay-in-place deck forms.

1.5.8 Post-Tensioned Structures

1.5.8.1 General Design

(1) Structure Depths

See *BDDM 3.18.2(2)* for minimum depth and live load deflection requirements.

(2) Shrinkage and Creep Stresses

The stresses in the superstructure and substructure of post-tensioned concrete bridges which result from elastic shortening may be assumed to remain in the structure indefinitely. The stresses which might be assumed to develop as the result of shrinkage and creep may be assumed to be relieved by creep.

(3) Shortening of Post-Tensioned Bridges

The following values for shortening of post-tensioned, cast-in-place concrete bridges are based on field measurements by the ODOT Bridge Section. Compare the design values with the field measured values and use the more conservative value.

Shrinkage prior to tensioning (theoretical)

0.4 x .0002 ft/ft x 12 in/ft x 100 ft =	0.10”/100’
Elastic shortening	0.44”/100’
Shrinkage and creep after tensioning to 1 year	0.29”/100’
Shrinkage and creep 1 year to 20 years (anticipated)	0.10”/100’

These structures were stressed to an average concrete stress of 1200 psi (1000 to 1300 psi). For other values, the elastic shortening and creep should be roughly proportional. Our data indicates that variation of these values by 50 percent would not be unusual.

(4) Deflections

Estimate long-term deflections as the net instantaneous deflection (DL + Prestress) times a factor of two for cast-in-place post-tensioned elements.

(5) Curved Post-Tensioned Ducts

Design for the radial prestress forces resulting from curved tendons in post-tensioned structures. Additional shear/flexural reinforcement may be required to resist the lateral web forces and ties to resist the web bursting forces.

(6) Design Moments at Interior Bents of Post-Tensioned Bridges

For crossbeams with widths less than the distance between the top and bottom slab, do not include the crossbeam in the superstructure section properties. Project the stem and slab dimensions to the centerline of the bent and use those dimensions to calculate section properties. Use the negative moment at the bent centerline for design.

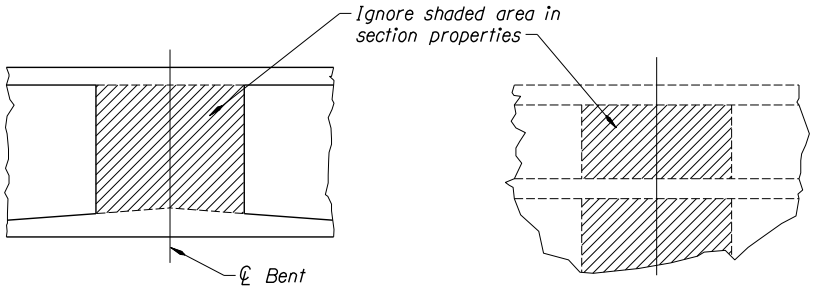

Figure 1.5.8.1

For greater crossbeam widths, use the above section properties and consider adding supplementary reinforcing steel across the top of the crossbeam to control any theoretical cracking that may occur from live loading.

(7) Skewed Box Girders

Box girder bridges with skews of over 20 degrees cannot be safely designed without taking into account the effects of skew. These effects generally increase as any of the following increase: skew angle, span length, torsional rigidity of the superstructure. The principal effect of skew is to increase the reactions at the obtuse corner of the structure and to reduce those at the acute corners (sometimes even causing uplift). This increases shear in the beams adjacent to the obtuse corners and produces transverse shear in the deck and bottom slab. These effects can be reduced by reducing the skew, which generally means lengthening the structure and/or by placing crossbeams at interior bents normal to the centerline of the structure.

When torsion due to skew is a problem, consideration should be given to reducing the torsional stiffness of the structure. RCDG bridges, either cast-in-place or with precast girders, are torsionally limber.

Do not design box girder bridges with bents skewed more than 45 degrees from the normal to the structure centerline.

Careful design of post-tensioning with regard to the deflection and slope of the girder at a skewed end can nullify or reverse the tendency of the obtuse corner of the skewed structure to take a disproportionate part of the dead load. Theoretically, this could be done so that under full DL+LL+I, the reactions would be equal at all bearings. Even an approximation of this condition will benefit the design.

(8) Concrete Tensile Stress Limits

The concrete tensile stress limits given in *BDDM 1.5.6.1* also apply to post-tensioned members.

1.5.8.2 General Details

Details and practices stated in *BDDM 1.5.7* generally apply to post-tensioned box girders as well as conventional box girders.

(1) Conventional Box Girders

See Standard Details *DET 3125* and *DET 3130* for general details.

(2) Precast Trapezoidal Box Girders

See Standard Drawing *BR133* and Standard Details *DET 3131*, *DET 3132*, and *DET 3134* for general details.

(3) Access and Ventilation

See Standard Drawings *BR135* and *BR136* for general details.

1.5.8.3 Post-Tensioned Deck Overhangs

Place post-tensioning ducts and deck reinforcement normal to the centerline of the structure.

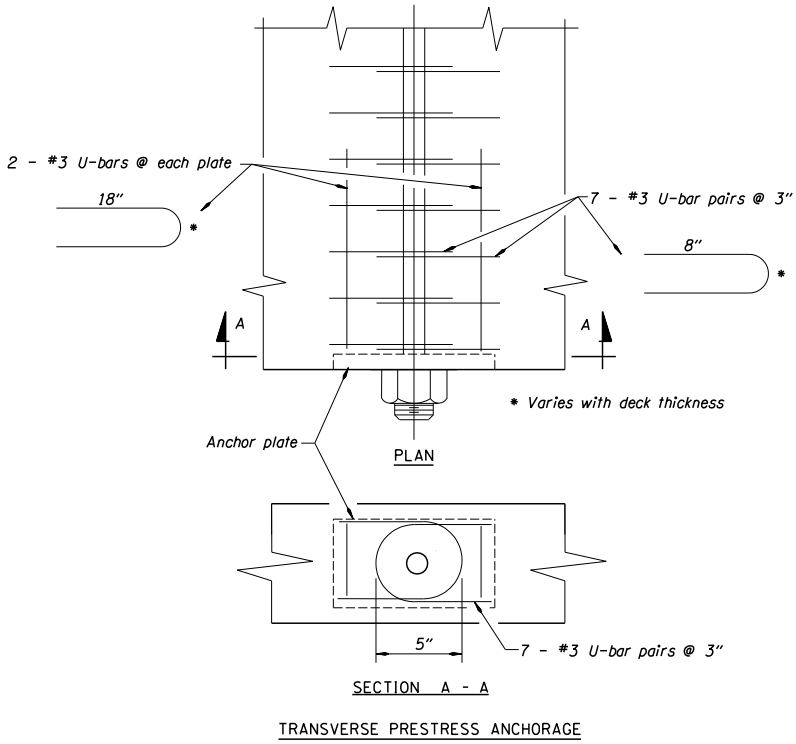

Figure 1.5.8.3

1.5.8.4 Stress Rod Reinforcement of Bearing Seats

A recent example of a stress-rod reinforced bearing seat is shown below. In order to retain a significant amount of prestressing force, the stressed length of the rod should be not less than 10 feet.

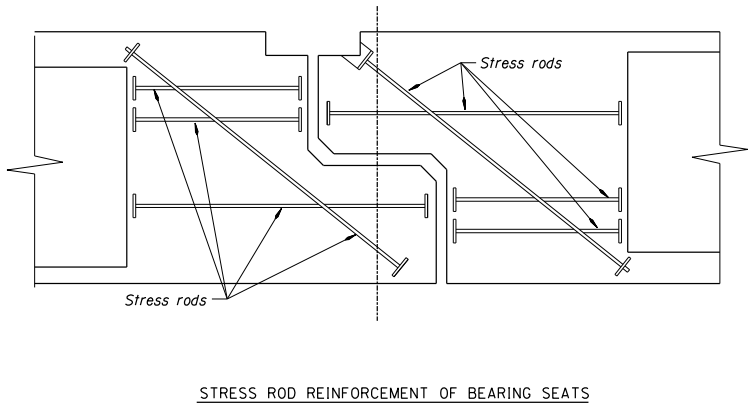

Figure 1.5.8.4

1.5.8.5 Segmental Construction

Where precast and cast-in-place concrete elements are joined in a continuous, segmental structure, chamfer the exterior corners of the cast-in-place portion to match the precast elements. It is standard practice to chamfer precast elements, even though the chamfer may not be shown on our drawings or the shop drawings.

1.5.8.6 Support Tower Details and Notes

Design the support tower at the end of the suspended span to support the reaction from the suspended span including the additional reaction due to post-tensioning. Show on the plans the approximate total reaction in kips. Design the tower to accommodate the elastic shortening of the superstructure due to post-tensioning. Make provisions so that the superstructure may be returned to the plan elevation (raised or lowered) in the event that actual settlement at the top of the tower differs from the anticipated settlement. Keep the support tower in place until the suspended span is fully supported by the cantilever and adjoining span.

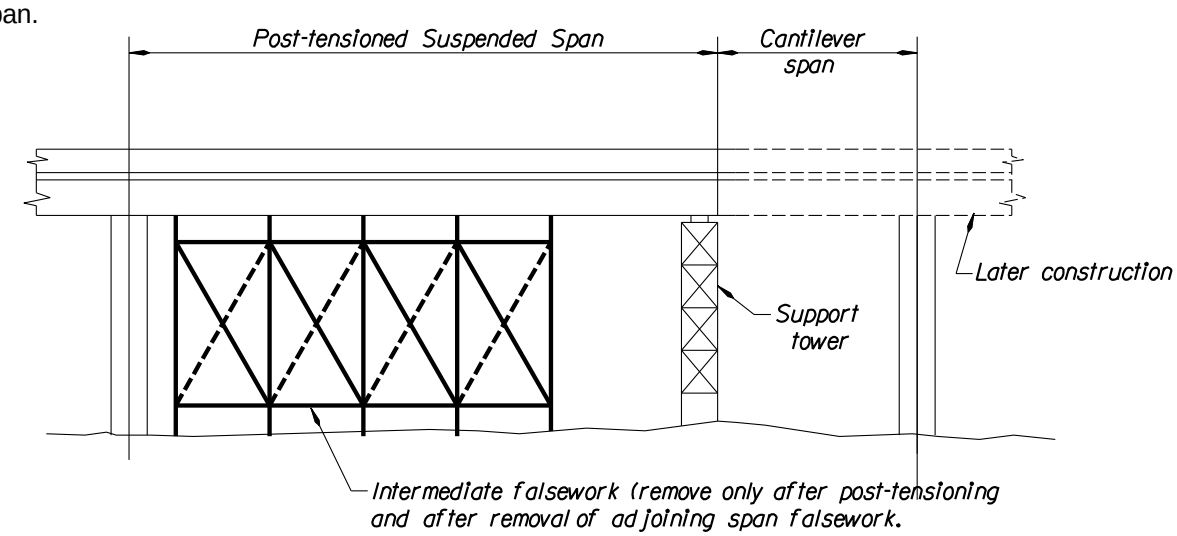

Figure 1.5.8.6A

1.5.8.7 Reinforcement of Deck Overhangs

In order to prevent cracking at the end of post-tensioned spans, extend the end diaphragm beam to the edge of the deck or provide additional diagonal deck reinforcement similar to shown below.

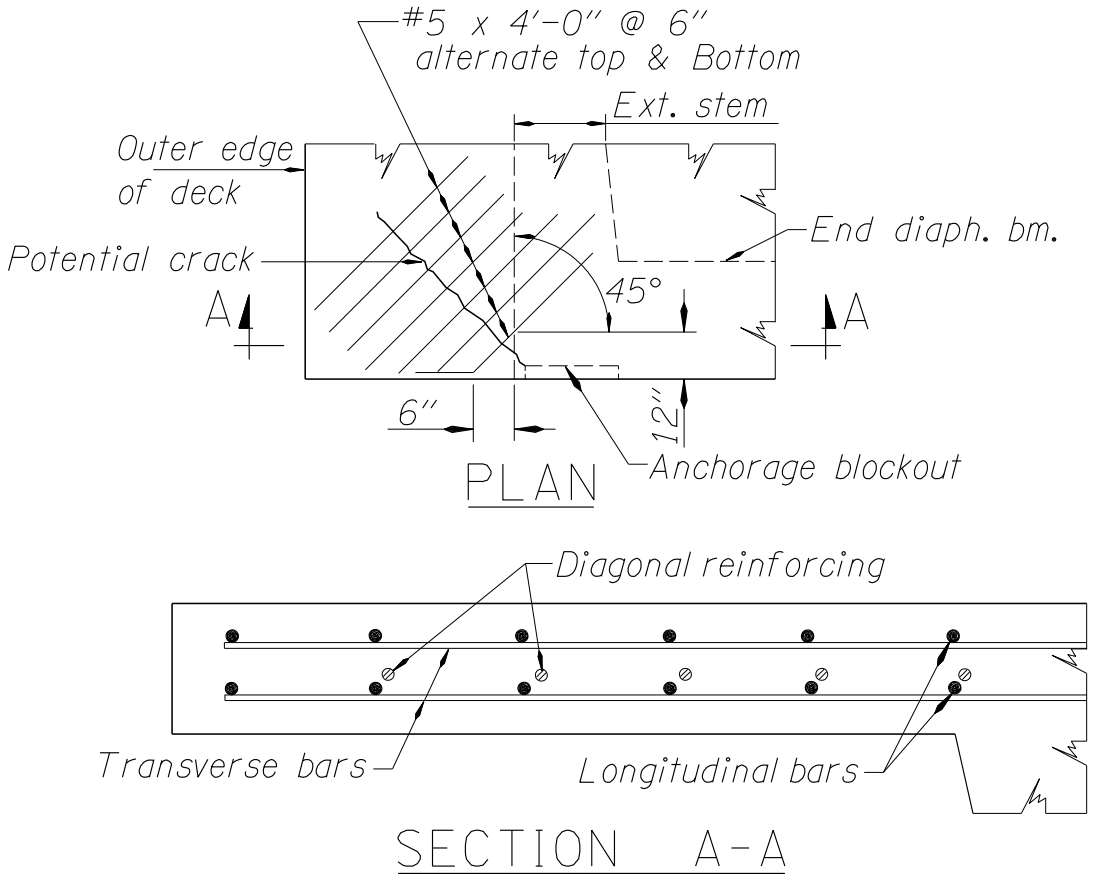

Figure 1.5.8.7

1.5.8.8 Post-Tension Strand Duct Placement

Place ducts for post-tensioned bridges using the detail provided on *DET3130*. The most common type of duct arrangement has been the bundled duct detail. This detail can be used when the duct size does not exceed 4-1/2 inches and when the horizontal curvature of the bridge does not require the use of supplemental ties (see *LRFD 5.10.4.3*). When the horizontal curvature does result in the need for supplemental ties, do not use bundled ducts. When supplemental ties are required due to horizontal curvature, use the following detail:

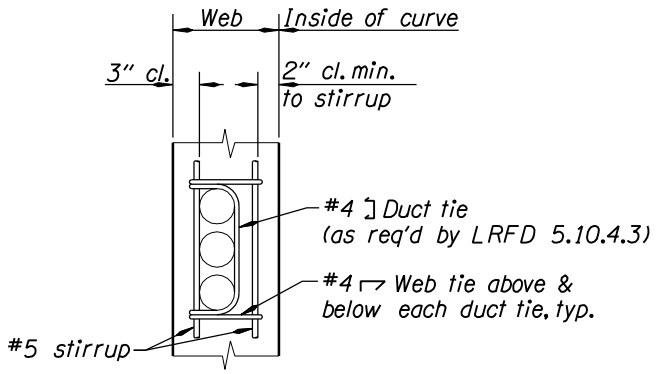

TYPICAL WEB AND DUCT TIE DETAIL

Figure 1.5.8.8A

The detailing of post-tensioned box girders should allow pouring the bottom slab and stems as separate pours. The design of the prestressed tendon path should be such that the ducts do not fall in the area of the bottom slab. See Standard Details *DET 3125* and *DET 3130* for general details. To ensure the ducts are fully encased in concrete, do not place ducts in the bottom slab and keep ducts at least 1 inch below the fillet construction joints near the top slabs. Show the following details on the project plans if needed:

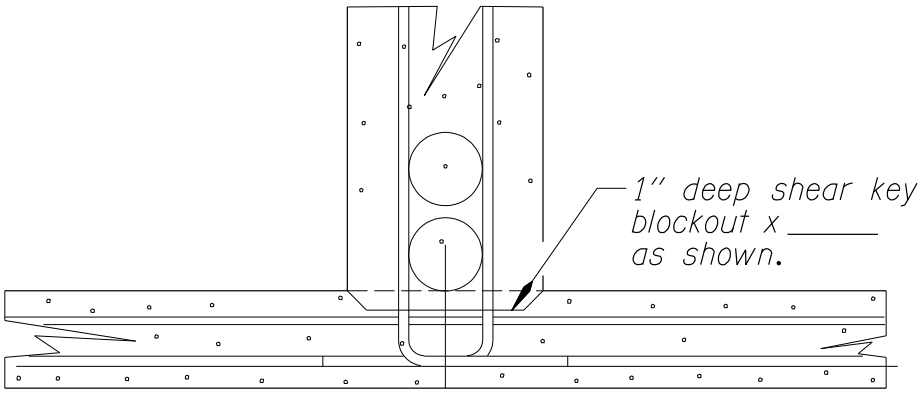

LOW POINT DETAIL

Figure 1.5.8.8B

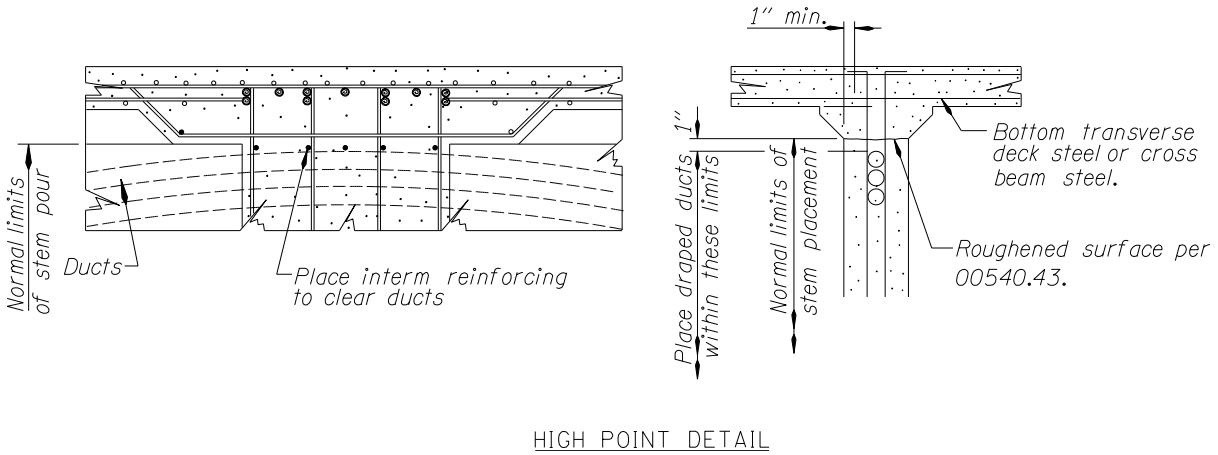

Figure 1.5.8.8C

In some cases it may be necessary to place ducts outside the limits shown above. If so, special concrete placement details will normally be needed to ensure the ducts are fully encased in properly consolidated concrete for the entire length of the bridge. For these cases, submit a design deviation request which shows the proposed duct placement detail. Include with the request the details and/or specification language intended to ensure the concrete will be fully consolidated in areas where the ducts penetrate either into the bottom slab or above the stem fillet construction joint.

1.5.9 Camber Diagrams

1.5.9.1 Camber Diagrams, General

Show camber diagrams on the plans for all types of cast-in-place concrete structures. The camber diagram shall be titled, “Camber Diagram” and be accompanied by the applicable portions of the following note:

> Camber is designed to compensate for deflection due to prestressing, the dead load of all concrete, stay-in-place forms and wearing surface and the long-term effects of shrinkage and creep.

An example of a camber diagram for a cast-in-place structure is shown below.

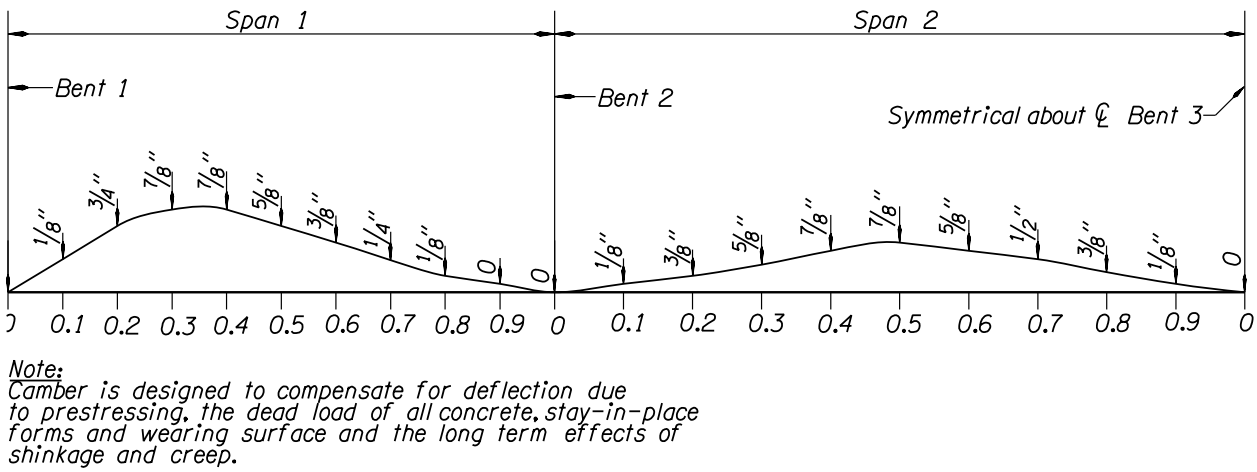

Figure 1.5.9.1

1.5.9.2 Precast Slabs and Box Beams

Camber of precast elements has increased in recent years due to higher strand forces. Top of slab elevations should reflect allowances for camber and grade correction. Rail posts lengths and curb heights will have to be increased accordingly near the ends to obtain the proper finish rail height and curb exposure. Note on the Typical Deck Section that post lengths may vary due to camber and/or superelevation. Include information on the contract plans as follows:

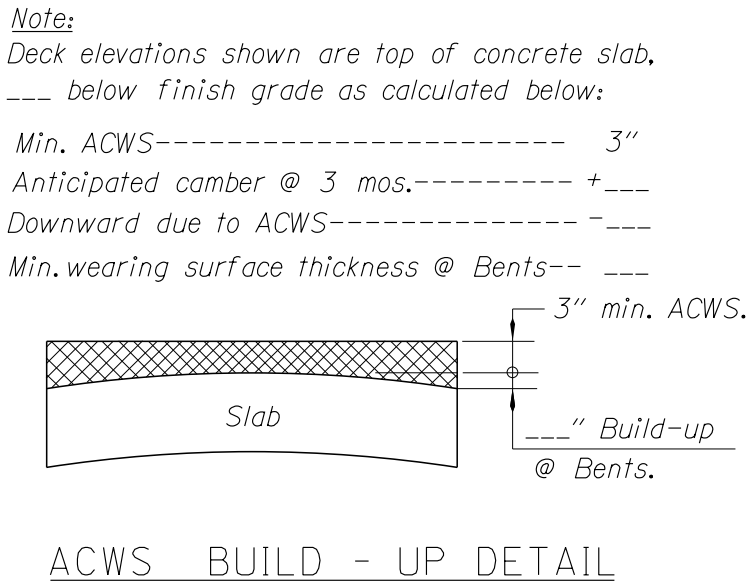

Figure 1.5.9.2

1.5.10 Pour Schedules

1.5.10.1 Pour Schedules, General

In order to avoid misunderstanding and claims by the contractor, take care to make sure that construction sequences and pouring schedules are clearly described. Particular care is needed if symmetrical structures are covered by sketches showing half of the structure.

In general, longitudinal pours in continuous spans are stopped near the bents to allow concrete shrinkage to occur in the majority of the span. Closure pours over the bent are generally shorter to minimize shrinkage cracking that could occur between fixed supports or placements.

Bottom slab or beam construction joints should be made at a falsework bent rather than a permanent bent. Cracking may develop at a permanent bent, if the adjacent falsework settles or deflects during the concrete placement.

1.5.10.2 T-Beams Supported on Falsework

A typical sketch and pour sequence is shown below.

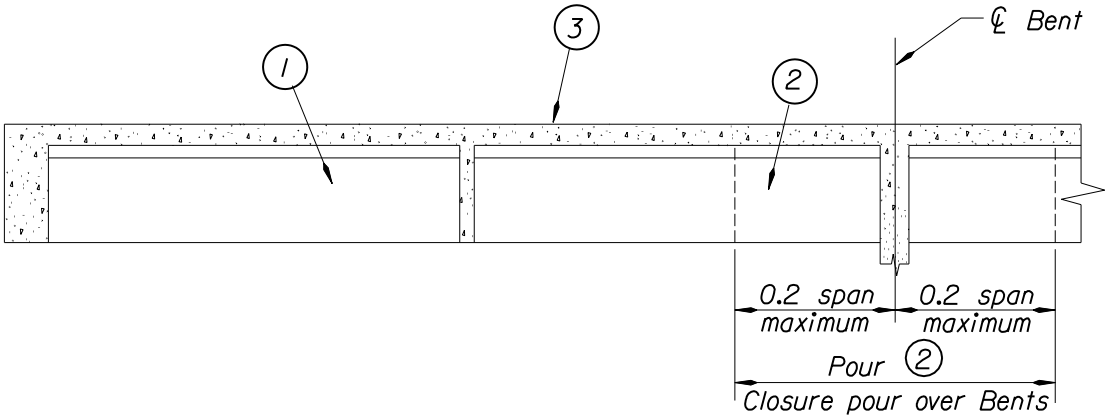

Figure 1.5.10.2

POUR SCHEDULE

1. Pours (1) and (2) are the longitudinal and transverse beams to the bottom of deck (or fillets). Make all Pours (1) prior to Pours (2). Beam construction joints shall not be near a permanent bent but shall be made at a falsework bent. Adjacent beam pours shall be delayed a minimum of 3 days.

2. Pour (3) is the (fillets and) deck. Pour (3) to be delayed a minimum of 3 days after completion of all Pours (2). A deck construction joint may be made over any transverse beam. Delay pouring adjacent sections of deck a minimum of 5 days. Bulkheads for deck pours shall not be removed until at least 3 days after completion of pour. Deck pours may extend over any part of a span or spans so long as they meet these requirements.

1.5.10.3 Box Girders on Falsework

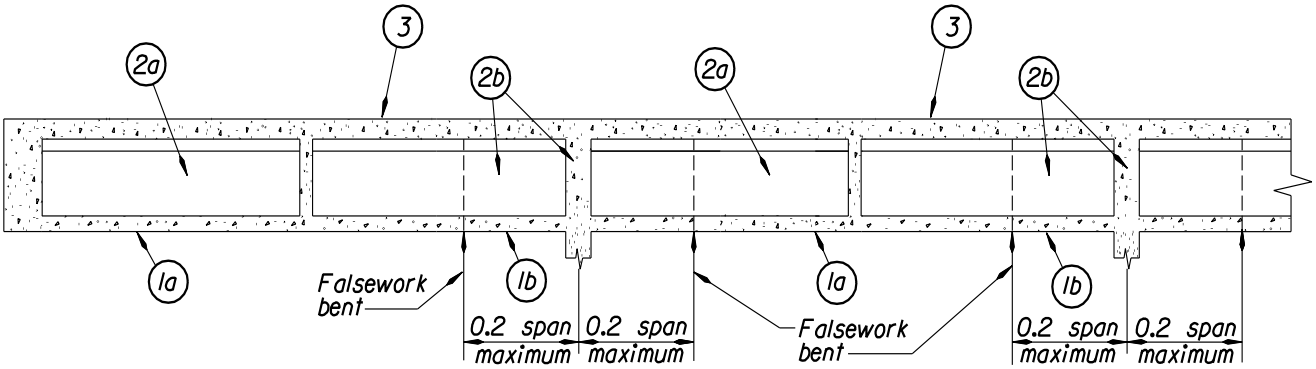

Figure 1.5.10.3

POUR SCHEDULE:

1. Pours (1a) and (1b) are the bottom slab. Stop Pours (1) at a falsework bent and not at a permanent bent. Delay a minimum of 3 days between adjacent Pours (1). Complete all Pours (1a) prior to starting Pours (1b). Complete all Pours (1) prior to starting Pours (2).

2. Pours (2a) and (2b) are the longitudinal and transverse beams to the bottom of the fillets. Stop Pours (2) over a falsework bent. Delay the start of Pours (2) a minimum of 5 days after bottom slab Pours (1) are complete. Delay a minimum of 3 days between adjacent Pours (2).

3. Pour (3) includes the fillets and deck slab. Pour (3) to be delayed a minimum of 3 days after completion of all Pours (2). Pours (3) may be stopped over any transverse beam, with the use of a deck construction joint. Delay a minimum of 5 days between adjacent Pours (3). Bulkheads for deck pours shall not be removed until at least 3 days after completion of the pour. Deck pours may extend over any part of a span or spans as long as they meet these requirements.

Comments:

Generally, it is preferred that the bottom slab be completely poured first and separately from the longitudinal beams. This ensures a more uniform bottom slab thickness, the slab provides a good base for stem forms, and the continuous bottom slab helps stabilize the falsework system. It also allows the falsework to take its initial settlement without affecting other superstructure components.

1.5.10.4 Drop-In Precast Prestressed Elements

Complicated types of construction require detailed construction sequence notes, such as the following:

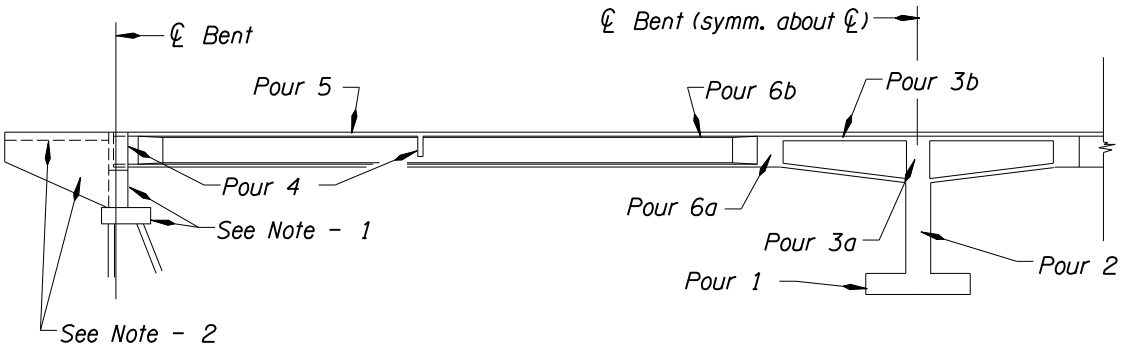

Figure 1.5.10.4

<u>POUR SCHEDULE</u>:

1. Make Pour (1).

2. Make Pour (2) , includes Bent 2 column.

3. Make Pour (3a) , includes bottom slab and webs to bottom of top fillet, Beam "C" to bottom of deck.

4. Make Pour (3b) , includes deck and top fillets for cast-in-place section. Delay Pour (3b) a minimum of 3 days after completion of Pour (3a).

5. Apply Stage I post-tensioning to cast-in-place section. Stressing to begin a minimum of 14 days after completion of Pour (3) , but not until concrete in Pour (3) has reached its design strength.

6. Place prestressed beams. Beams to be placed so that the number of beams in one span does not exceed by more than 4 the number in the opposite span.

7. Make Pour (4) , includes diaphragm beams "D" and end beams "E".

8. Make Pour (5) , (no less than 60 days after transfer of stress in precast, prestressed beams), includes deck on prestressed beams to diaphragm beam nearest Bent 2.

9. After Pour (5) has been made in Spans 1 and 2, make Pour (6a) , includes remainder of Beam "C". Let concrete take initial set, and make Pour (6)b , includes remainder of deck.

10. Apply Stage II post-tensioning to assembled Spans 1 and 2. Stressing to begin a minimum of 14 days after completion of Pour (6) , but not until concrete in Pour (6) has reached its design strength.

11. Pour curbs.

NOTES:

1. Bents 1 and 3 footings and walls may be poured any time up to 7 days prior to placing of prestressed beams, but concrete must have reached its design strength prior to beam placement. No part shall interfere with post-tensioning operations.

2. Paving slab and sidewalls may be poured at any time except that no part shall interfere with post-tensioning operations.

3. Deck concrete shall be screeded parallel to bents.

4. Composite decks and/or closure Pours shall not be made until at least 60 days have elapsed from the time of transfer of prestressing force in the precast elements.

1.5.10.5 Continuous Cast-in-place Slabs on Falsework

For pours over 600 cy, allow a transverse deck construction joint at 0.2(span) from the next interior bent.

1.5.10.6 End Bents

If the fit of superstructure elements is critical, the end bent construction sequencing should consider this. End wall construction should normally be delayed until the superstructure elements are in place. Delaying the end wall construction also allows the contractor to compensate for errors in superstructure element lengths and end bent locations. Show a construction sequence diagram, with notes, as needed.

1.5.10.7 Steel Girders

See *BDDM 1.6.1.9* for example.

1.6 STEEL STRUCTURE DESIGN AND DETAILING

1.6.1 Steel Girders

1.6.2 Welding

1.6.3 Galvanizing and Painting

1.6.4 Bolts and Connections

1.6.1 Steel Girders

Design

Design according to *AASHTO LRFD Bridge Design Specifications* unless specified otherwise in this document.

The minimum strength for deck concrete is 4000 psi with an approximate modulus elasticity of 3800 ksi. The modular ratio "n" does not need to be an integer number and for 4000 psi concrete must not be less than 7.60.

Oregon Department of Transportation does not require Certified Erector qualification for erection of steel bridges. For a complex project in which a contractor with such qualification is deemed necessary, obtain Bridge Engineering Section approval prior to including such requirement in the contract documents.

Replace the first paragraph of *LRFD C6.13.6.1.4a* with "For flexural members, it is recommended that the smaller section at the point of splice be taken as the side of the splice that has the smaller calculated moment of inertia for the non-composite steel section"

Curved and skewed deck girder bridges have the potential for three dimensional deflection and rotation. Longer spans magnify the rotation of the girders and cause unaccounted stresses on the diaphragm connections. Include a note in the contract drawings that the girder webs should be plumb in the final condition. This requires the erector to force fit the diaphragms with the girders out-of-plumb prior to deck placement. Rotation of girders resulting from the deck placement plumbs the girders web and releases stresses caused from force fitting the diaphragms.

Steel tub (box) girders are visually pleasing structures and are more expensive than usual steel plate girders because of fabrication cost. One of the main concerns in steel tubs or box girders in the State of Oregon is corrosion inside the girders. In the construction drawings, require inside surfaces of boxes or tubs (bottom flange, top flange, web and diaphragm) to be painted with a silver gray prime coat. Painting inside the tub (box) girders will prevent corrosion resulting from leakage thru the deck and condensation. Light color paint also increases illumination inside the tub (box) and eases detection of corrosion or cracks in steel members. Consider other corrosion protection measures as specified herein.

Whenever the end of steel members is cast inside concrete, the end of the member cast in concrete requires a three coat paint system as shown in *Figure 1.6.1.10C*.

Consult with the Steel Bridge Design Standards Engineer for the latest design aids and design computer programs.

Submit a request for a design deviation to the State Bridge Engineer before replacing an established detail or method from this manual. This may include design methods and/or details established in other states or may have been used previously in this State, design methods and/or details presented in research reports,

design methods and/or details developed by AASHTO/NSBA Collaboration, details and fabrication methods recommended by NSBA, or innovative design methods and/or details developed by designers. This requirement is not intended to inhibit innovation or the ability of the designer to exercise good engineering judgment. On the contrary, it is intended to allow good innovative ideas to be used and to potentially become part of this manual.

Fatigue Design Requirements – Design all welded and bolted connections for infinite fatigue design life. Do not use details category E or E' in any steel girder bridge (plate girders, tub girders or box girders) connections.

Bid items

Use following bid items for structural steel. Use horizontally curved steel (plate or box) girder bid item when the radius of horizontal curve on the structure is less than 1000ft.

- Steel Rolled Beam
- Steel Plate Girder
- Steel Box Girder
- Steel Plate Girder with hunch
- Trapezoidal Steel Box Girder with hunch
- Horizontally Curved Steel Plate Girder
- Horizontally Curved Steel Box Girder
- Specialty Bridges (tied arches, Cable Stayed)
- Structural Steel Maintenance

Details

See Standard Details *DET3600*, *DET3605* and *DET3610* for general details.

(1) Girder Spacing

Use wider girder spacing to reduce the number of lines of girders, which will reduce shop and field labor. Girder spacing between 10 feet to 14 feet generally works well. (10 feet' to 12 feet for spans less than 140 feet and 11 feet to 14 feet for spans greater than 140 feet)

(2) Girder Lengths

Girder segments should be as long as possible to reduce the number of field splices. Girder or girder field segment lengths without a field splice should normally not exceed 150 feet. There may be locations where girders lengths will be controlled by weight or access to the bridge site. Long girders may also require auxiliary lateral support during transportation. Consult with the Steel Bridge Standards Engineer for a maximum fabrication length.

An optional bolted field splice should normally be shown to allow the fabricator and contractor some flexibility in fabrication and transportation.

(3) Girder Depths

Girder depths, particularly for haunched girders, may be limited because of transportation constraints.

Use constant depth girders where possible.

(4) Girder Splices

Locate splices to avoid conflicts with wind bracing, diaphragms and/or intermediate stiffeners. Layout locations of all intermediate stiffeners, diaphragms and wind bracing to avoid conflicts with the flange cutoff points (and possible splice locations).

Splices are a natural location to make changes in the flange size to eliminate flange welds. Webs should be the same thickness on each side of the splice.

(5) Girder Flanges

(a) General

The number of changes in flange size should be kept to a minimum, as the cost of a butt weld will offset a considerable length of excessive flange area.

Constant width flanges enables the fabricator to order the flanges in multiple width plates which are more economical than universal mill plates. The shop flange splices can be made while the plates are in wide slabs and cut to widths simultaneously with multiple cutting torches.

Keep the number of flange splices to a minimum. At least 500 pounds of steel should be saved before adding a splice for a change of thickness in an average 20 inch wide flange. If the splice is a transition in width, the saving should be 800 pounds of steel. Allow the contractor the option to use thicker flange plate to reduce the number of flange splices.

The minimum size flange should be 3/4” x 12”. The minimum 3/4 inch flange thickness is to minimize the distortion of the flange due to welding of the flange to the web.

For longitudinal beams, limit the maximum change between adjacent plate thickness per 1.2.1(c) and 6 inches in width, at both welded and bolted connection section changes.

(b) Compression Flanges

Make top flanges a constant width and thickness where possible. Minimizing the number of changes in the top flange will also facilitate easier deck forming.

It may not be prudent to minimize the top flange. The girder needs significant lateral load capacity to resist lateral transportation loads and lateral loads from deck overhang brackets and deck placements. Some erectors limit the length of girder shipping pieces to 85 times the flange width. Another side benefit of providing generous top flange as that the non-composite deflections are reduced.

(c) Tension Flanges

Make bottom flanges a constant width where possible. If a change in flange width is needed, make it at a bolted splice location.

Limit the maximum flange thickness to 3.0 inches. For flange thicknesses greater than 1-1/2 inches, limit the change in adjacent plate thicknesses to 3/4 inch. For flange thicknesses 1-1/2 inches or less, limit the change in adjacent plate thicknesses to 1/2 inch.

Generally, use a minimum flange width that is equal to the width of the flange resisting the maximum positive moment. Widen the flange as necessary in negative moment areas so the flange thickness will not exceed 3.0 inches at the bent.

(6) Girder Webs

Commonly used web plates are in the range of 48 inches to 96 inches.

Minimum web thickness should be 1/2 inch.

Note that economy will often be served by the choice of a web plate of sufficient thickness that it does not require transverse stiffeners. In some cases thinner web plate with partial web stiffeners are economical. The labor to place and weld one foot of stiffener is equal to about 25 pounds of steel. Un-stiffened webs reduce fabrication, painting costs (for non-weathering steel) and flange sizes. Thicker webs are also helpful in reducing web distortion due to welding and in supporting deck overhang brackets for the deck placement.

Design web plates in 1/16 inch increments with a note that the contractor may increase the web thickness shown by 1/16 inch at no additional cost to the state. Minimize web transitions as the cost of a butt weld web splice often exceeds the cost of the added material between sections.

The cost of a square butt joint web splice is equal to about 800 pounds of steel per foot of splice. When web plates are over 80 feet long and constant thickness, the fabricator should be given an optional shop splice on the design plans. The most economical bid can then be prepared according to the mill length extras, market areas available, and transportation and handling costs.

1.6.1.1 Materials and Identification

(1) General

Identify all steel by grade on the contract plans.

Structural steel for bridges should conform to ASTM A709 (AASHTO M270). These specifications include Grades 36, 50, 50W, HPS 50W, and HPS 70W. ASTM A709 steel specifications are written exclusively for bridges wherein supplementary requirements for Charpy V-Notch Impact tests are mandatory. Grade HPS 70W steel has recently been developed that provides high strength, enhanced durability and improved weldability. Specify Grade HPS 50W and HPS 70W to be “Quenched and Tempered” in the contract document and for thermo-mechanical control processed require the contractor to provide test samples at both ends of each rolled plate. Plates that pass the required test are acceptable for fabrication.

Structural Steel for steel piling, metal sign structures and other incidental structures should conform to ASTM A36, ASTM A572 or ASTM A588. Incidental structures include luminaire and traffic signal supports, bridge metal rails and metal rail posts, guardrail connections, earthquake restraints, bridge deck expansion joints, fencing post connections, etc. Merchant quality steel (non-spec) is used in items such as catch basin frame, catch basin, deck drain grate, manhole rungs and steps, access hole cover, guardrail spacer blocks, shims, anchor bolt plate embedded in concrete, etc. where a high degree of internal soundness, chemical uniformity or freedom of surface defects are not required. Acceptance of such items is on the basis of visual inspection.

ASTM A36, A572, or A588 may be used for structural steel for bridges provided the supplementary Charpy V-Notch Impact test requirements are included in the Special Provisions. If Charpy V-Notch Impact tests are required for ASTM A36, A572 or A588 structural steel, use the supplementary requirements of ASTM A709.

Do not use A709 (Grades 36, 50, 50W) steels for plates thicker than 3 inches, nor butt welds in tension members over 3 inches. Limit plate thickness for HPS 50W and HPS 70W to 2 inches. Consult with the Steel Design Standards and Practice Engineer for specific project needs.

Specify ASTM A709 Grade 50 steel for all structures that require yield strengths between 36 ksi and 50 ksi and are to be painted or galvanized.

(2) Weathering Steel

Through several cycles of wetting and drying, the surface of the steel develops a tight oxide coating (patina) that provides its own corrosion resistant surface finish. Eliminating the need for painting results in minimal future maintenance and lower life cycle costs.

The use of ASTM A709 Grade 50W, HPS 50W, HPS 70W & 100W weathering steel should be considered with some caution. There are some environmental areas, locations or conditions where weathering steel should be avoided. There have been cases where the use of this material in improper locations or under improper conditions has resulted in less than desirable performance of the structure. Conditions or locations of concern include:

Environment

- Marine Coastal areas
- Frequent high rainfall, high humidity or persistent fog
- Industrial areas where concentrated chemical fumes may drift onto the structure
- Weathered, riveted, or bolted built up structural member (boxes or plate girders)

Location

- Grade separations in tunnel like conditions
- Low level water crossings
- Conditions that do not allow for the drying of the steel necessary to develop a good patina.

The FHWA Technical Advisory *T 5140.22*, “Uncoated Weathering Steel in Structures”, should be reviewed or location restrictions and recommended detailing practices.

One of the significant advantages of HPS 50W, HPS 70W steel is its enhanced weathering capacity over Grades 50W and 70W steels. Weathering capability is calculated using the heat analysis compositions in an equation to calculate an atmospheric corrosion resistance index, “I”, in ASTM G101 “Estimating the Atmospheric Corrosion Resistance of Low-Alloy Steels.” In general, a corrosion index of 6.5 is considered a minimum to be classified as HPS. The higher the index, “I”, the more corrosion resistant is the steel. Do not use Grade 70W steel.

(3) Check Samples

Tension members and elements that require notch toughness check samples are to be clearly identified on the plans. Consult with the Fracture Control Engineer, on the Preservation Team, to determine if any of the components will require check samples. If check samples are required, include *SP 00560.22(d)* in the project Special Provisions. Check samples are required for cross-frame members on curved steel girders.

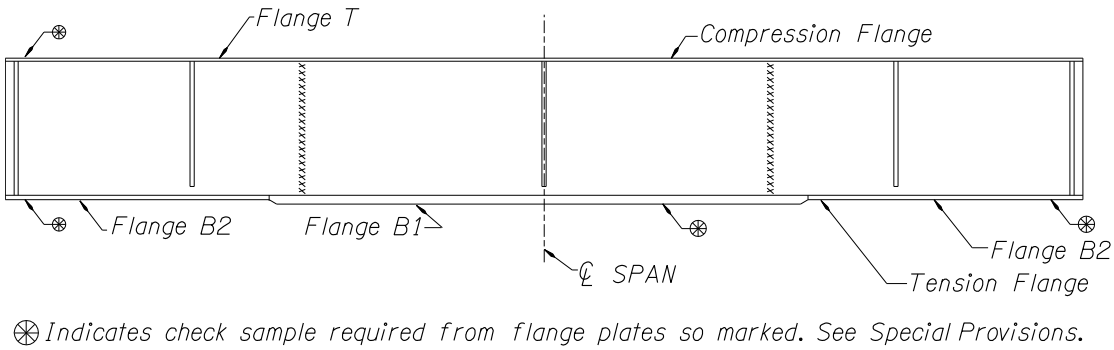

Figure 1.6.1.1A

(4) Fracture Critical Members

Fracture-critical members should also be clearly identified on the plans.

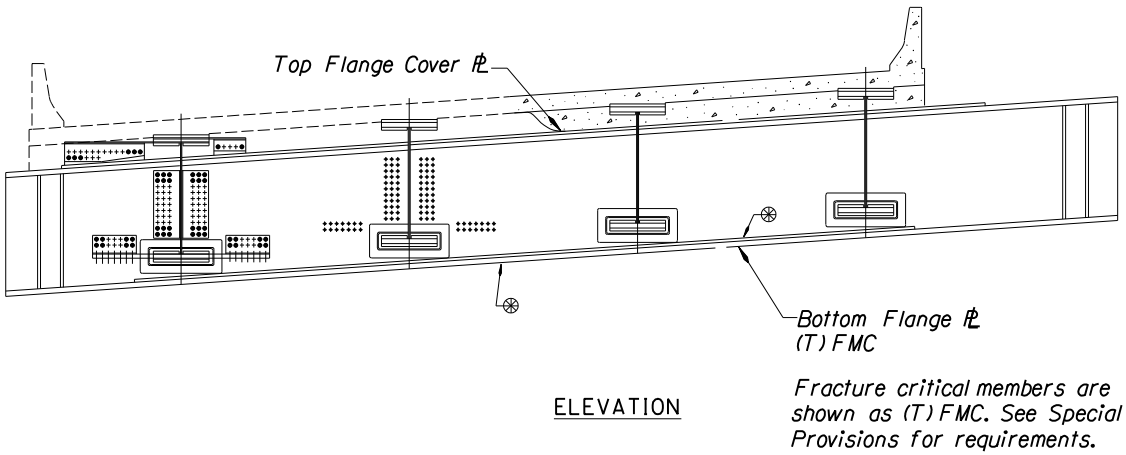

Figure 1.6.1.1B

1.6.1.2 Shop Lengths of Welded Girders

Locate field splices in welded steel beams so as not to exceed the following shop lengths and mass (All field splices shall be bolted):

- Bridge site is readily accessible....150 feet (longer girders have been fabricated and hauled to project sites, however contact fabricators and Bridge Engineering Section if project need requires girder segments longer than 150 feet).
- Bridge site is not readily accessible....125 feet
- There is a not a maximum weight requirement, however fabricators are limited to their shop crane sizes. Contact fabricators in the State of Oregon for project specific needs and requirements.

Prior to finalizing the shop length of steel members, consult with the Steel Bridge Standards Engineer.

1.6.1.3 Intermediate Cross-Frames

Design

If needed, provide and design cross-frames for all stages of construction and the final condition.

Detailing

In choosing between intermediate cross-frames of "K" or "X" form, the "X" form should generally be used when the ratio of the beam spacing to the frame depth is less than 2 and the "K" form when it is greater than 2. When the depth of the frame approaches 3 feet or less, a solid plate diaphragm should be considered.

Maintenance requirements should also be considered in the cross-frame design. Adequate clearance for sandblasting and painting should be provided. Inaccessible areas should be avoided. It may also be necessary to provide for maintenance walkways and/or utilities through the cross-frames.

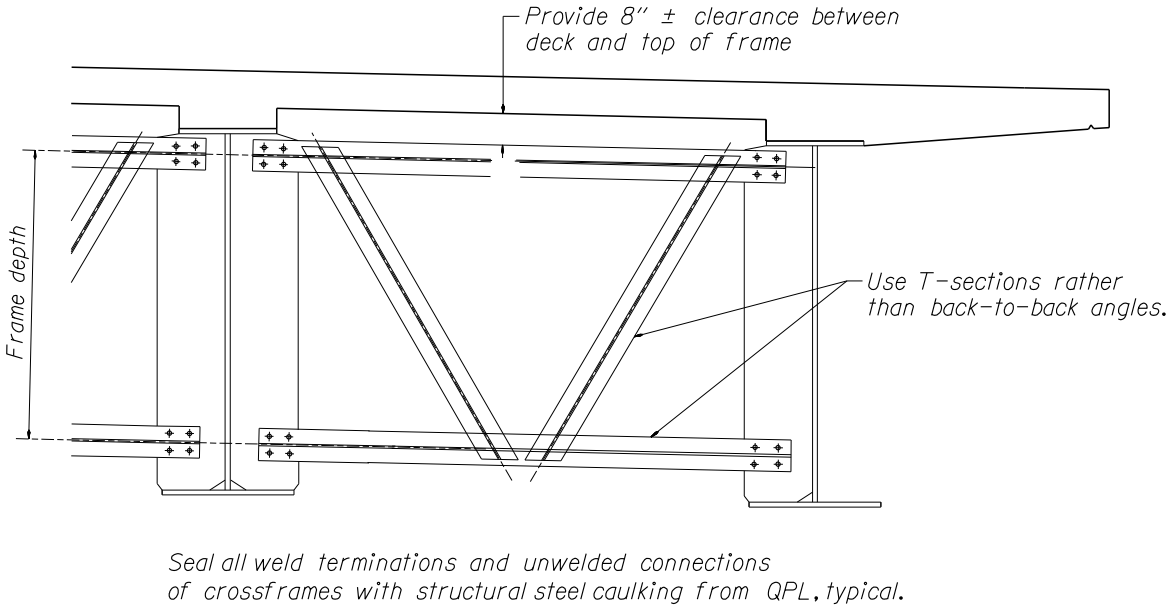

Figure 1.6.1.3A

Rigidly connect cross-frames to the top and bottom flanges to prevent web distortions and cracking. Weld stiffeners to compression and tension flanges as shown on *Figures 1.2.1.3B, 1.2.1.3C and 1.2.1.3D*. Stop ends of welds about 1/4 inch away from the edge (snipe, clip, etc.) to avoid a poor quality weld termination.

Do not stagger intermediate cross-frames in skewed or curved steel plate girders. Where two adjacent plate girders have significant differential deflection, such as the first row of cross-frame from the end bents, do not use the “K” or “X” type of cross-frames. Use details shown on *Figure 1.6.1.13B*. Check fatigue requirements of all welded connections.

Provide intermediate cross-frames between the box girders. Submit a request for a design deviation to the State Bridge Engineer when a project requires omitting intermediate cross-frames or diaphragm between steel tub or box girders.

Connection Plates for Bracing Members - Cope diaphragm connection plates, which are welded to both the web and flange of a plate girder, a minimum of 1-1/2 inches to prevent intersection of the two welds. Avoid lateral connection plates for lateral bracing which will be connected to the web of the plate girder or box girders. Bolt lateral connection plates to the flange of the steel girder. Cope lateral connection plates to be clear of any transverse web stiffener or diaphragm connection plate.

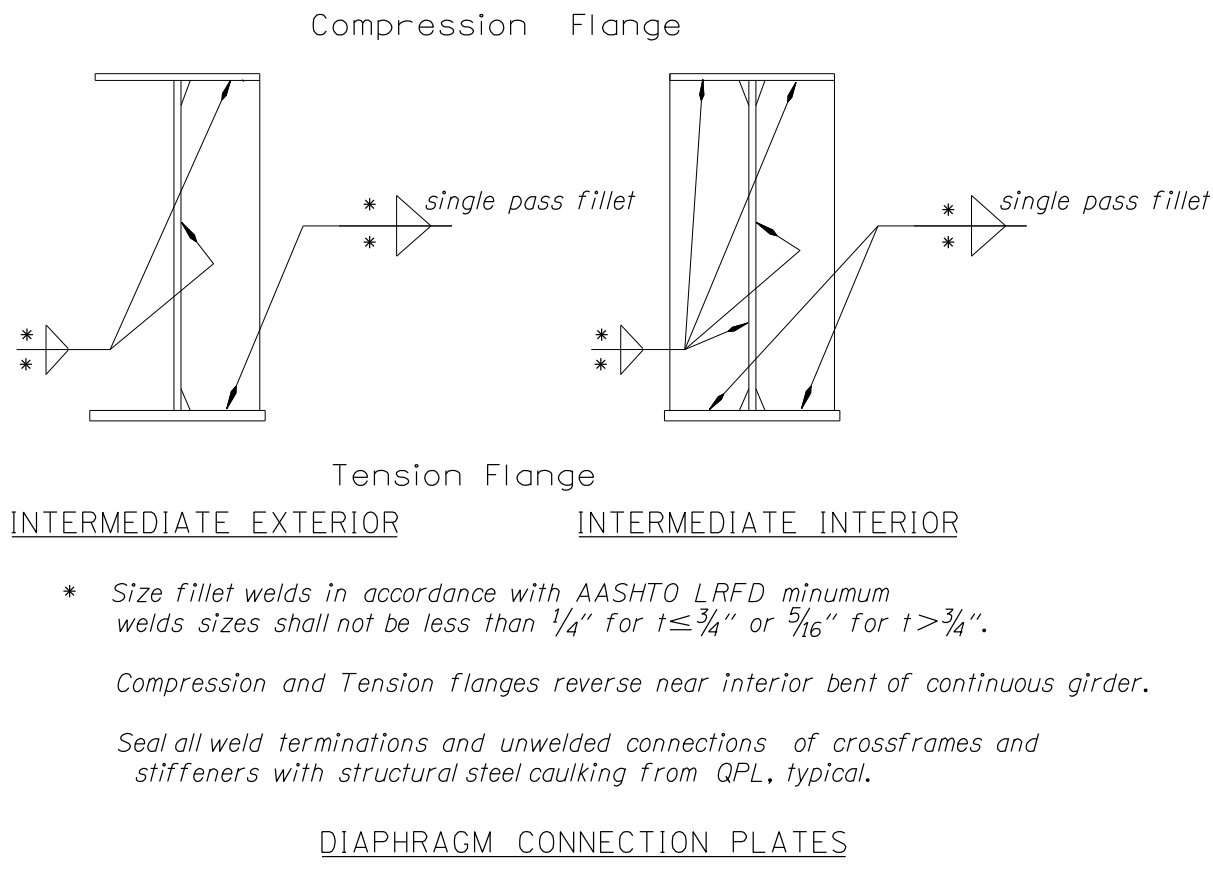

Figure 1.6.1.3B

CURVED GIRDER

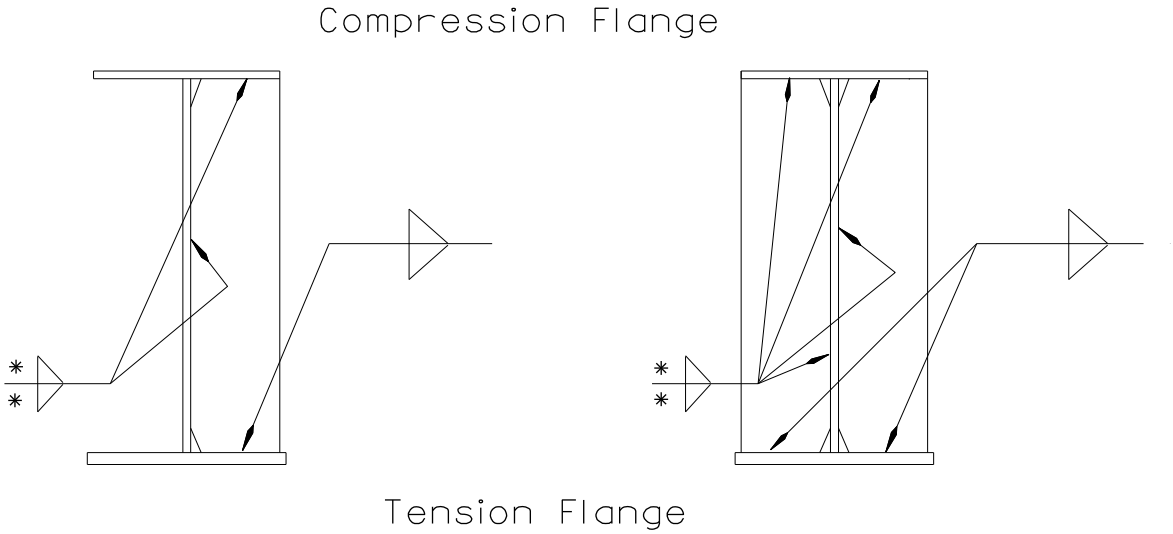

Compression and Tension flanges reverse near interior bent of continuous girder.

Seal all weld terminations and unwelded connections of crossframes with structural steel caulking from QPL, typical.

DIAPHRAGM CONNECTION PLATES

Figure 1.6.1.3C

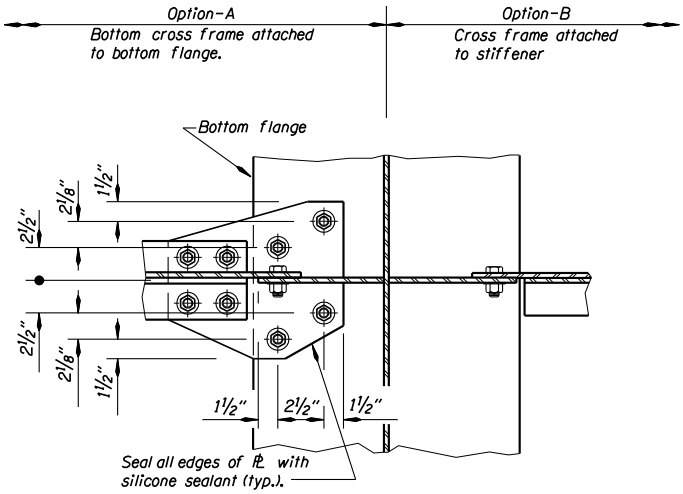

PLAN

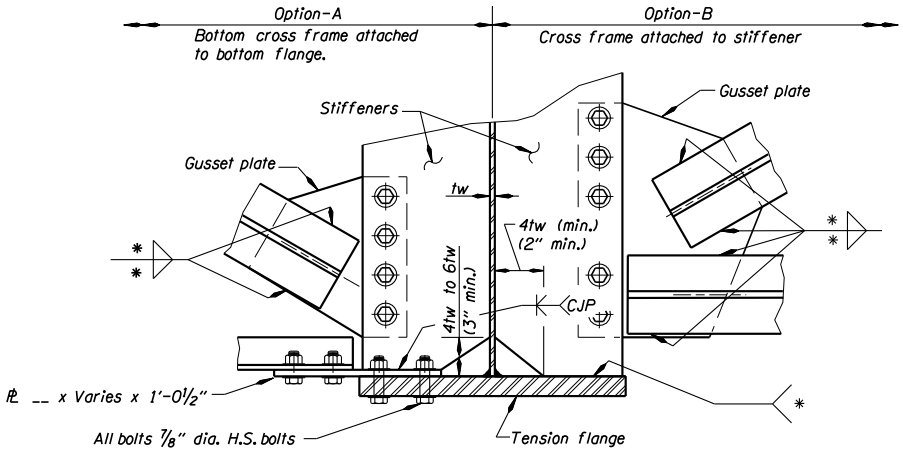

ELEVATION

Installation Procedure:

Step 1. Coat contact surfaces.

Step 2. Bolt thru bottom flange.

Step 3. Weld stiffener to web.

Note:
Steel to steel contact surfaces shall be cleaned and coated non welded connections prior to bolting per Specification.

Stop all fillet welds ±¼" clear from end of plate

* *Size fillet welds in accordance with AASHTO LRFD minumum welds sizes shall not be less than ¼" for t ¾" or 5/16" for t ¾".*

Seal all weld terminations and unwelded connections of crossframes and stiffeners with structural steel caulking from QPL, typical.

For stiffener thickness connecting to tension flange ≤ ½". See figure 1.2.1.3B

WELDED BRACKET DETAILS

Figure 1.6.1.3D

1.6.1.4 Intermediate Web Stiffeners

Note that economy will often be served by the choice of a web plate of sufficient thickness that it does not require transverse stiffeners.

Where transverse intermediate stiffeners are used, provide them on both faces of the webs of interior girders and on the interior faces, only, of exterior girders.

Rigidly connect the stiffeners to the compression portions of the flanges. Stiffeners may be welded to compression flanges. The ends of welds should end about 1/4" away from the edge (snipe, clip, etc.) to avoid a poor quality weld termination.

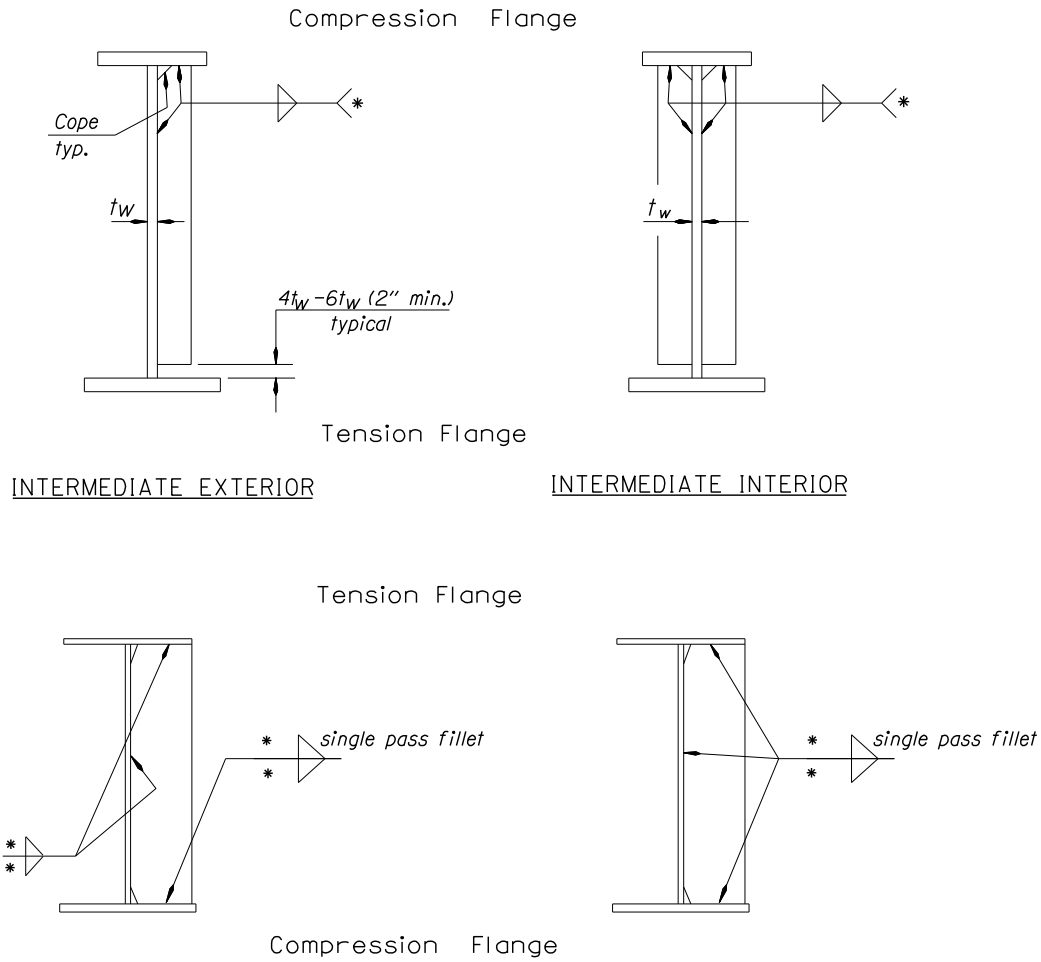

For stiffener thickness connecting to tension flange ≤ 1/2". See figure 1.2.1.3B
* Size fillet welds in accordance with AASHTO LRFD. Minumum weld sizes not less than 1/4" for t≤3/4" or 5/16" for t>3/4".

* Compression and tension flanges reverse near interior bents for continuous girder.
* Seal all weld terminations of stiffeners with structural steel caulking from QPL, typical.

INTERMEDIATE WEB STIFFENERS

Figure 1.6.1.4A

1.6.1.5 Bearing Stiffeners

Bearing stiffeners and the web act as a column section, transferring loads from the superstructure to the substructure. In combination with the end frames, they also transfer lateral loads from the superstructure to the substructure. The details shown below are for simple span, non-continuous supports.

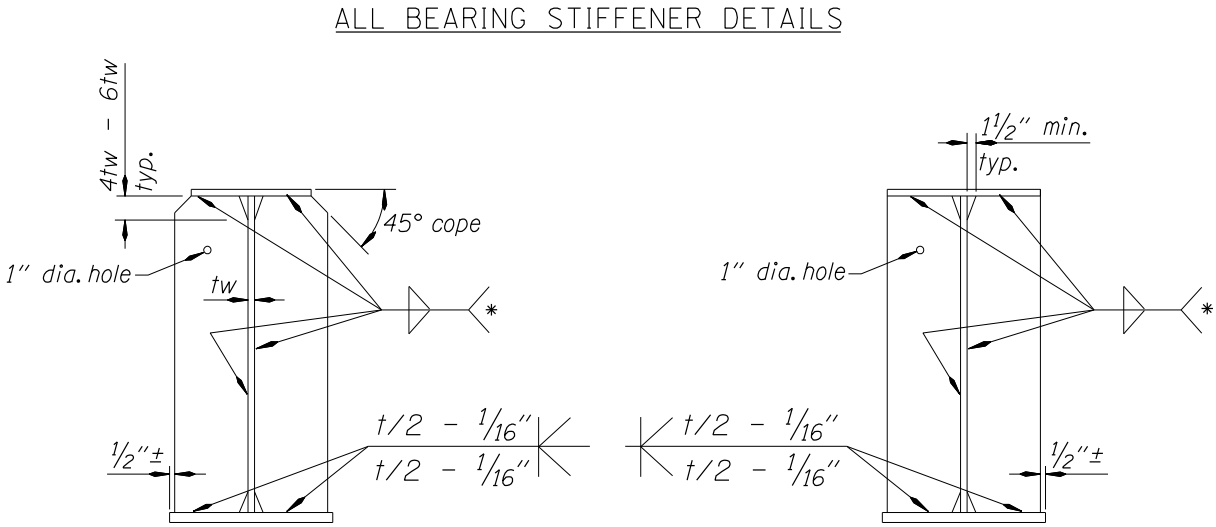

Figure 1.6.1.5A

For continuous beams, where the top flange is in tension use the Tension Flange detail shown in *Figure 1.6.1.3B*, as the usual practice is being cautious to weld stiffeners to tension flanges. Stop weld 1/4 inch away from the edge (snipe, clip, etc.) to avoid a poor quality weld termination. Minimum size of fillet weld is the minimum specified in *BDDM 1.6.2.2*. Select bearing stiffener widths in increments of 1/2 inch.

Limit bearing stiffeners skew angle at End bents or interior bents to the values shown in *Figure 2.3* of the AWS D1.5 for bearing stiffeners to web connection. Discard the footnotes of the figure which permits angles less than 60 degrees. When the skew angle exceeds limit shown on the Figure, use bent plates.

1.6.1.6 Cross-Frames at Bents

Cross-frames at bents are more critical to transfer seismic forces from the superstructure to the substructure. One solution is to use detail *1.6.1.6A* with a W shape beam between the girders at the top of the cross-frame. Welded studs are added to the top flange of these W shape beams to provide the lateral resistance.

If a joint system is required for a cross-frame at end bents, it may be necessary to use details similar to cross-frames at continuous beam interior bents. See *Figure 1.6.1.6A*.

Diaphragms or cross-frames are required along skewed interior bents and end bents.

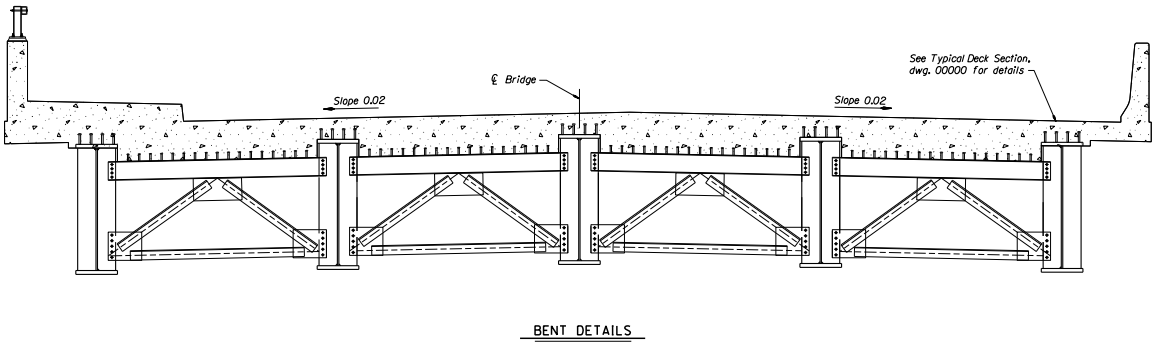

Figure 1.6.1.6A

It is desirable to have all cross-frame member centerlines intersecting at a common point. But, it is often easier to design for the eccentric loads in the connection than to get a common intersection point of the member centerlines.

1.6.1.7 Composite Action and Flange Shear Connectors

Provide shear connectors in all portions of continuous spans, positive or negative moment. Old practice was to not use concrete reinforcement to increase the moment capacity of composite girders in the negative moment areas. However, for deflection and moment calculations include longitudinal reinforcing steel in the composite section properties of the girder in the negative moment areas.

Extend shear connectors at least 1 inch above the mid depth of the deck. Generally, the deck build up on steel girders is constant except for bridges with variable cross-slopes (super elevation) along the bridge. However the top flange plate thicknesses may vary. Consider the effect of top flange thickness variation and bridge deck super elevations when checking the shop drawings or specifying the shear connector's length. The advantages of longer shear connectors are in distributing load to larger area of the bottom mat reinforcing steel when a girder fails in fatigue. The concrete deck will distribute a portion of the unsupported load of the failed girder to adjacent girder/girders.

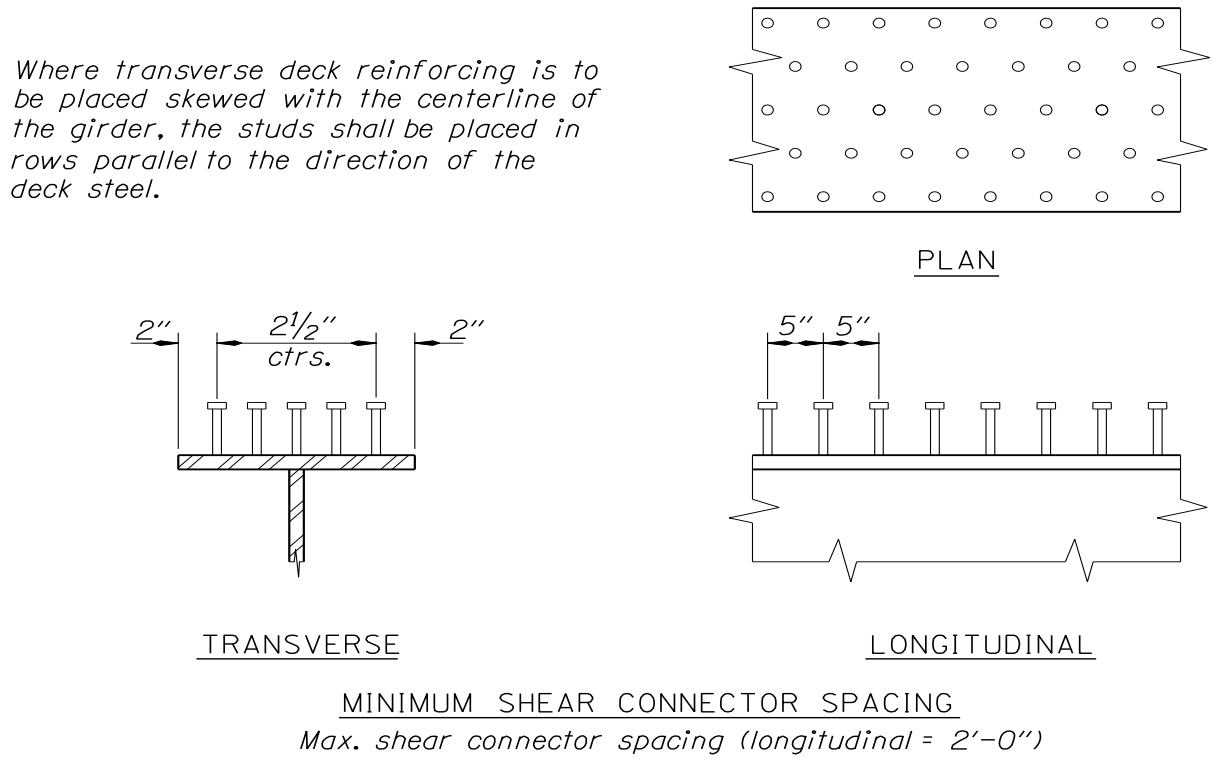

Figure 1.6.1.7A

1.6.1.8 Beam Camber

(1) Beam Camber, General

Steel beams are cambered to compensate for dead load, shrinkage deflections and gradelines. The final position of the bottom flange is either flat or follows the grade, except in a sag vertical curve. A final negative camber should not be put in a beam. Profile grades can be incorporated into the camber by either added camber in the beam or by varying the deck flange build-ups along the beam. Sag vertical curves always require flange build-ups. Minimum flange build-ups should take into consideration the superelevation of the deck.

Slope adjustment or build-up for straight girders on curved roadways must also be considered. Deck grades are based on the roadway centerline and straight girders are offset at midspan from the centerline. As a result, the adjustment is the superelevation times the midspan offset. Additional beam camber at midspan or additional build-up at the ends will be required. See *Figure 1.6.1.8A*.

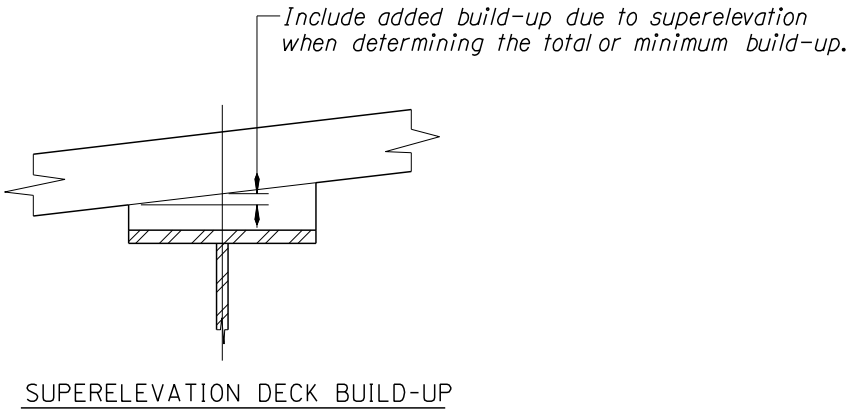

Figure 1.6.1.8A

Sketches of the camber options for simple spans are shown in *Figures 1.6.1.8B through 1.6.1.8D*.

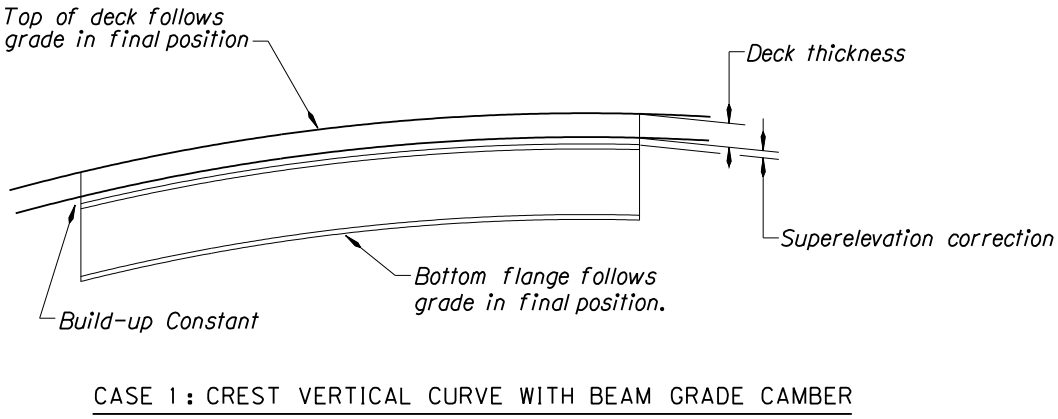

Figure 1.6.1.8B

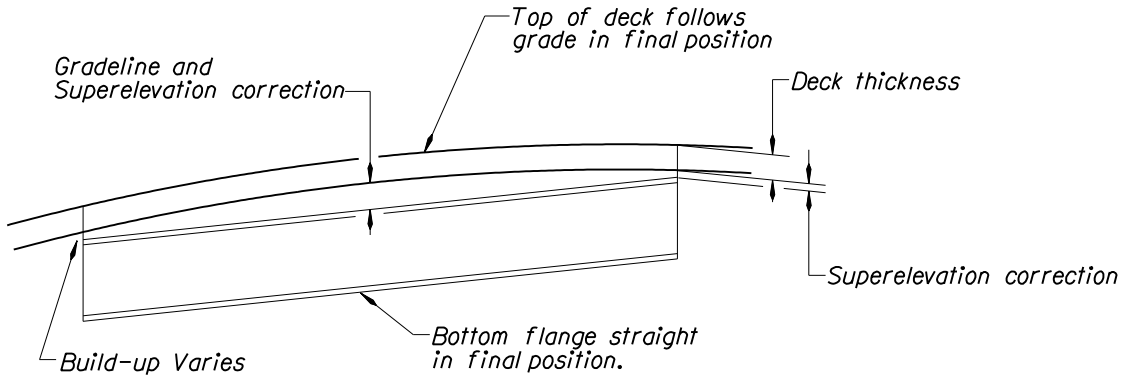

CASE 2 : CREST VERTICAL CURVE WITH BUILD-UP FOR GRADE CAMBER

Figure 1.6.1.8C

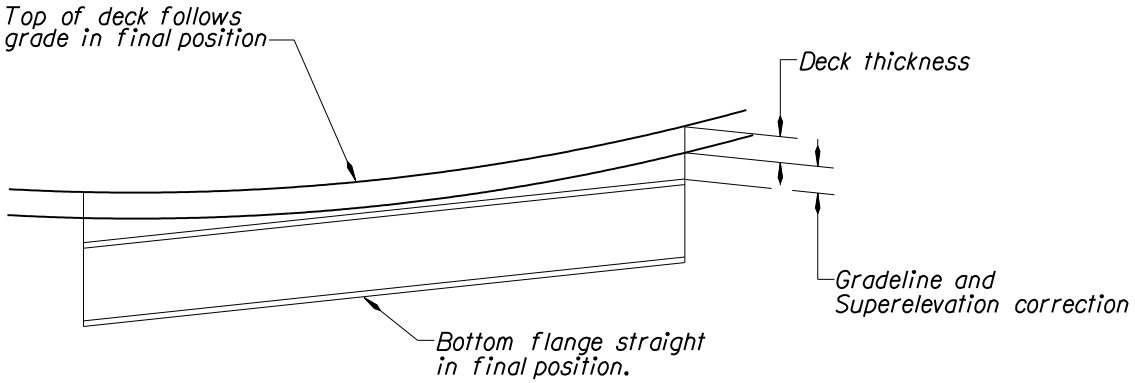

CASE 3 : SAG VERTICAL CURVE WITH BUILD-UP FOR GRADE CAMBER

Figure 1.6.1.8D

(2) Shrinkage Camber

To obtain shrinkage camber deflections, apply shrinkage moments at the beam ends as shown below.

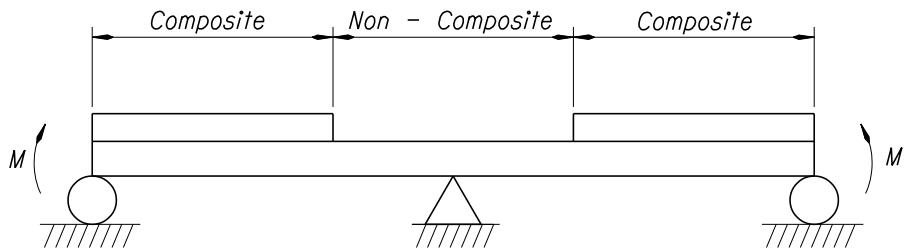

Figure 1.6.1.8E

m = moments applied to structure due to concrete shrinkage

= (0.0002 in/in)$E_c A_c Y_t$ in kip-inches

Where:

E_c = Modulus of elasticity of concrete (ksi)
f'_c = Concrete Strength (psi)

A_c = total area of concrete (in²)

Y_t = distance from cg of the deck to the cg of the composite section *. (inches).

* Note: Use 3n for modular ratio in calculating section properties.

(3) Camber Diagrams

Show the following data for steel beam camber on the contract drawings:

Grade line camber..... _____
Dead load camber..... _____
Superimposed Dead load camber..... _____
Shrinkage camber..... _____
Total Camber..... _____
Camber due to weight of steel beam and diaphragm… _____

Camber diagram examples:

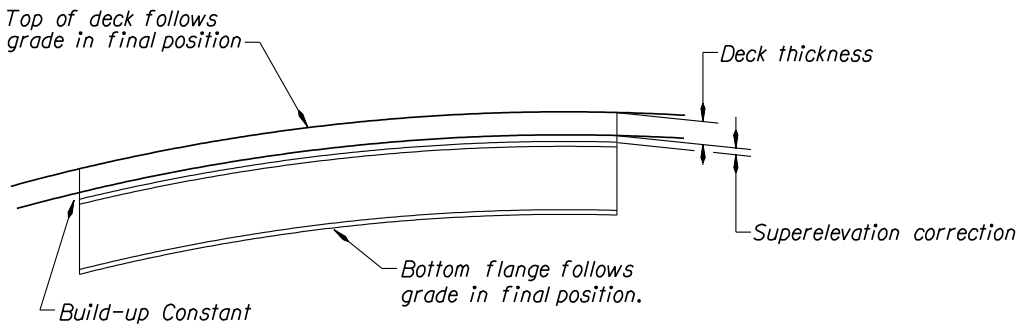

CREST VERTICAL CURVE WITH BEAM GRADE CAMBER

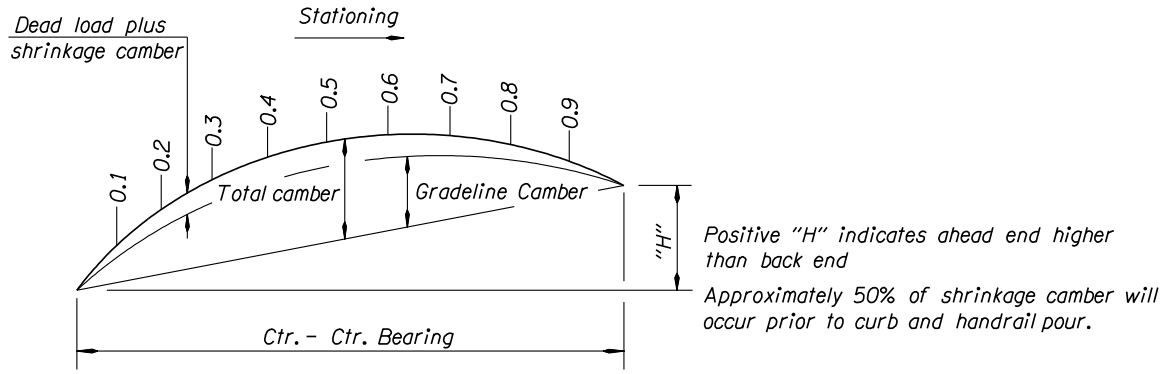

GIRDER CAMBER

Span	Item	Camber 0.1 Pt.	0.2 Pt.	0.3 Pt.	0.4 Pt.	0.5 Pt.	0.6 Pt.	0.7 Pt.	0.8 Pt.	0.9 Pt.	H inches
1	Beam Dead Load + Diaphragms	5/8"	1"	1 3/8"	1 1/2"	1 3/8"	1 1/8"	3/4"	3/4"	1/16"	+16 3/8"
	Deck Dead Load + Form	1 3/8"	2 1/2"	3 3/16"	3 1/4"	3 3/16"	2 3/16"	1 3/8"	11/16"	1/4"	
	Sidewalk, Rail & WS Dead Load	3/8"	5/8"	13/16"	7/8"	1 3/16"	15/16"	5/8"	5/16"	1/16"	
	Shrinkage	5/8"	1"	1 1/4"	1 1/4"	1 1/8"	1"	3/4"	1/2"	1/4"	
	Sub Total	3"	5 1/8"	6 5/8"	6 7/8"	6 3/8"	5 1/8"	3 1/2"	1 7/8"	5/8"	
	Gradeline	3/8"	3/4"	1"	1 1/8"	1 1/4"	1 1/8"	1"	3/4"	3/8"	
	Total	3 3/8'	5 7/8"	7 5/8"	8"	7 5/8"	6 1/4"	4 1/2"	2 5/8"	1"	
2	Beam Dead Load + Diaphragms	1/16"	1/4"	5/8"	7/8"	1 1/16"	1/16"	5/8"	5/16"	1/16"	+7 3/8"
	Deck Dead Load + Form	1/8"	3/4"	1 5/8"	2 7/16"	3 11/16"	3 1/4"	1 5/8"	13/16"	1/8"	
	Sidewalk, Rail & WS Dead Load	1/16"	1/4"	1/2"	13/16"	7/8"	13/16"	1/2"	1/4"	1/16"	
	Shrinkage	-1/4"	-3/8"	-3/8"	-3/8"	-3/8"	-1/4"	-1/8"	-1/8"	0	
	Sub Total	0	7/8"	2 3/8"	3 3/4"	4 1/4"	3 7/8"	2 3/4"	1 1/4"	1/4"	
	Gradeline	5/8"	1 1/4"	1 5/8"	1 3/4"	1 7/8"	1 3/4"	1 5/8"	1 1/4"	5/8"	
	Total	5/8"	2 1/8"	4"	5 1/2"	5 1/8"	5 5/8"	4 3/8"	2 1/2"	7/8'	

Figure 1.6.1.8F

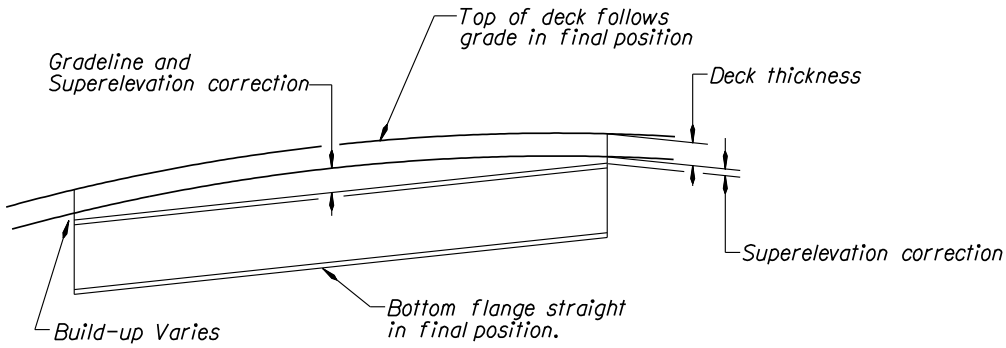

CREST VERTICAL CURVE WITH BUILD-UP FOR GRADE CAMBER

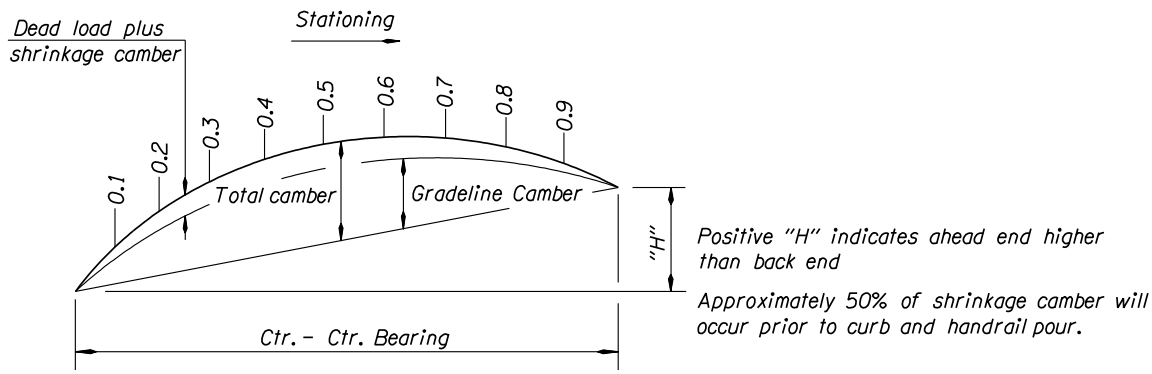

GIRDER CAMBER

Span	Item	Camber									H inches
		0.1 Pt.	0.2 Pt.	0.3 Pt.	0.4 Pt.	0.5 Pt.	0.6 Pt.	0.7 Pt.	0.8 Pt.	0.9 Pt.	
1	Beam Dead Load + Diaphragms	5/8"	1"	1 3/8"	1 1/2"	1 3/8"	1 1/8"	3/4"	3/4"	1/16"	+16 3/8"
	Deck Dead Load + Form	1 3/8"	2 1/2"	3 3/16"	3 1/4"	3 3/16"	2 3/16"	1 3/8"	11/16"	1/4"	
	Sidewalk, Rail & WS	3/8"	5/8"	13/16"	7/8"	1 3/16"	15/16"	5/8"	5/16"	1/16"	
	Shrinkage	5/8"	1"	1 1/4"	1 1/4"	1 1/8"	1"	3/4"	1/2"	1/4"	
	Sub Total	3"	5 1/8"	6 5/8"	6 7/8"	6 3/8"	5 1/8"	3 1/2"	1 7/8"	5/8"	
	Gradeline	None	None	None	None	None	None	None	None	None	
	Total	3"	5 1/8"	6 5/8"	6 7/8"	6 3/8'	5 1/8"	3 1/2"	1 7/8"	5/8"	
2	Beam Dead Load + Diaphragms	1/16"	1/4"	5/8"	7/8"	1 1/16"	1/16"	5/8"	5/16"	1/16"	+7 3/8"
	Deck Dead Load + Form	1/8"	3/4"	1 5/8"	2 7/16"	3 11/16"	3 1/4"	1 5/8"	13/16"	1/8"	
	Sidewalk, Rail & WS	1/16"	1/4"	1/2"	13/16"	7/8"	13/16"	1/2"	1/4"	1/16"	
	Shrinkage	-1/4"	-3/8"	-3/8"	-3/8"	-3/8"	-1/4"	-1/8"	-1/8"	0	
	Sub Total	0	7/8"	2 3/8"	3 3/4"	4 1/4"	3 7/8"	2 3/4"	1 1/4"	1/4"	
	Gradeline	None	None	None	None	None	None	None	None	None	
	Total	0	7/8"	2 3/8"	3 3/4"	4 1/4"	3 7/8"	2 3/4"	1 1/4"	1/4"	

Figure 1.6.1.8G

1.6.1.9 Deck Pouring Sequence

Deck pouring sequences for continuous steel spans must be developed according to the span and deflection characteristics of the particular bridge.

The general principal is to first place the sections that are outside of the negative moment zones. Subsequent placements may produce negative flexure in the previously placed sections (See *LRFD C6.10.3.7* for commentary). Provide minimum negative flexure slab reinforcement per *LRFD 6.10.3.7* as needed. Set retarding admixture may be required to reduce excessive induced stresses in adjacent spans placed sequentially.

Any changes to the pouring sequence during construction must be analyzed by the Contractor's Engineer to determine any effects on stresses and camber. This review will need to be completed early in the process, because it may affect the beam fabrication.

The following steps are a general rule for pouring sequence of continuous steel bridges:

1. Pour (1) consists of all positive moment areas along the bridge which will not cause upward deflection on other span/s. No waiting period is required between these spans.
2. Pour (2) consists of multiple separate placements of all positive moment areas of spans that cause upward deflection on other spans. The wait period between these span placements is a minimum of three days after the last pour (1) ended and reaches 70% of final strength. If multiple spans are placed sequentially in the same pour, set retarding admixture may be required to reduce excessive induced stresses in adjacent spans.
3. Pour (3) consists of all negative moment areas. The pour can be placed a minimum three days after the last pour (2) ended.

The pouring sequence of three span continuous balanced bridges is shown below:

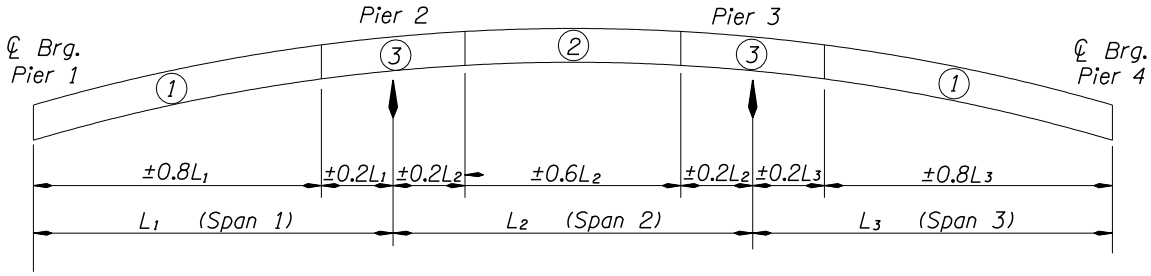

DECK POURING SEQUENCE - STEEL SPANS

POURING SEQUENCE

1. Make Pours (1). May be made simultaneously or separately as desired by the contractor.
2. After a minimum of 3 days after the completion of Pour (1) and concrete has reached 70% full strength. Make Pour (2).
3. After minimum of 3 days after completion of Pour (2), make Pours (3). Pours (3) may be made simultaneously or separately.

Note: Deck concrete shall be placed and screeded parallel to bents.

Figure 1.6.1.9A

The deck pouring sequence for bridges designed continuous for live load consists of two pours. Pour (1) for all positive moment areas except for closure pours. Pour (2) consists of all closure pours at interior

and/or end bents a minimum of three days after pour (1).

1.6.1.10 End Bents Detailing

It is desirable to eliminate end bent joints or make construction jointless to protect the girder steel from leaking joints.

Use the extended deck detail or semi integral abutments similar to *Figures 1.6.1.10A or 1.6.1.10B*.

Use the integral abutments when geometry and span length allow. Show a painted section at the ends of plate girders. On jointless bridges paint the end of the girder for a length of 1'-0" outside the concrete interface and 4 inches inside the concrete interface. See *Figure 1.6.1.10C*.

Where joints cannot be avoided, show a paint detail at the end of plate girders. Paint the end of the girder for a length at least 1.5 times the depth of the girder and all attachments within this limit. See *Figure 1.6.1.10D*. The paint color is to match the developed weathering steel patina 2.5 years after completion of the bridge construction. See *Figure 1.6.1.10D*.

EXTENDED DECK DETAILS

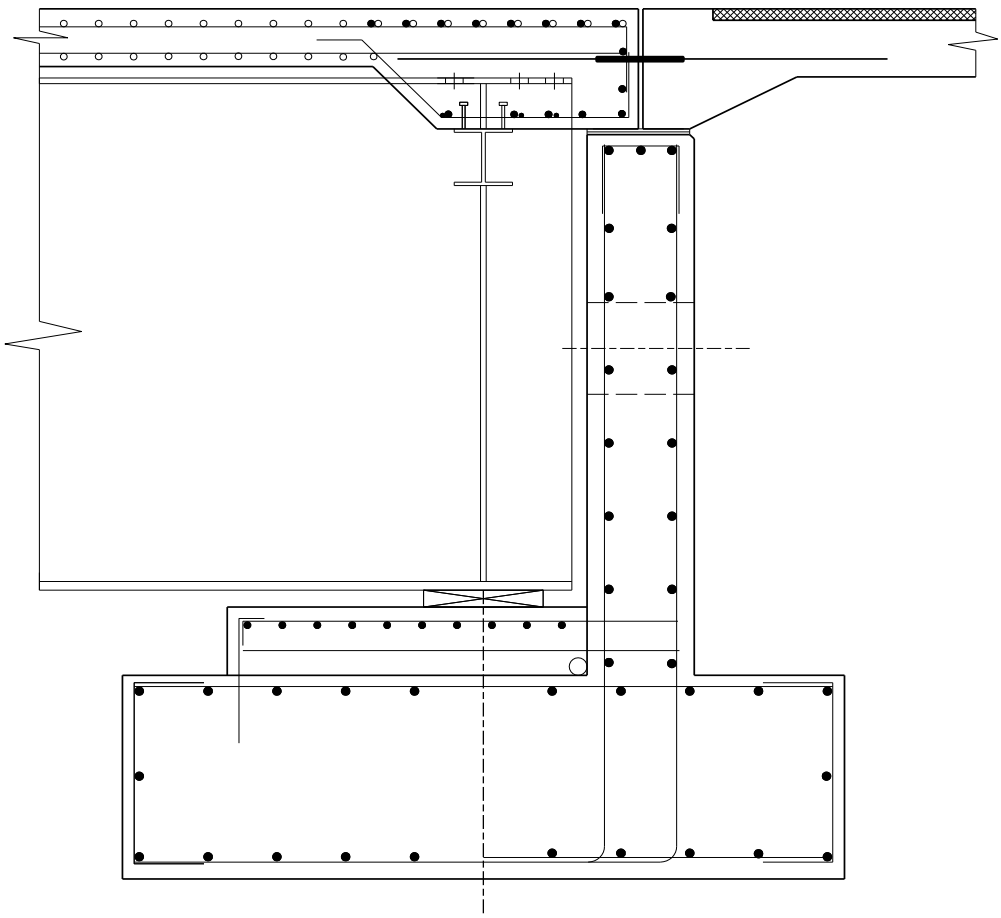

Figure 1.6.1.10A

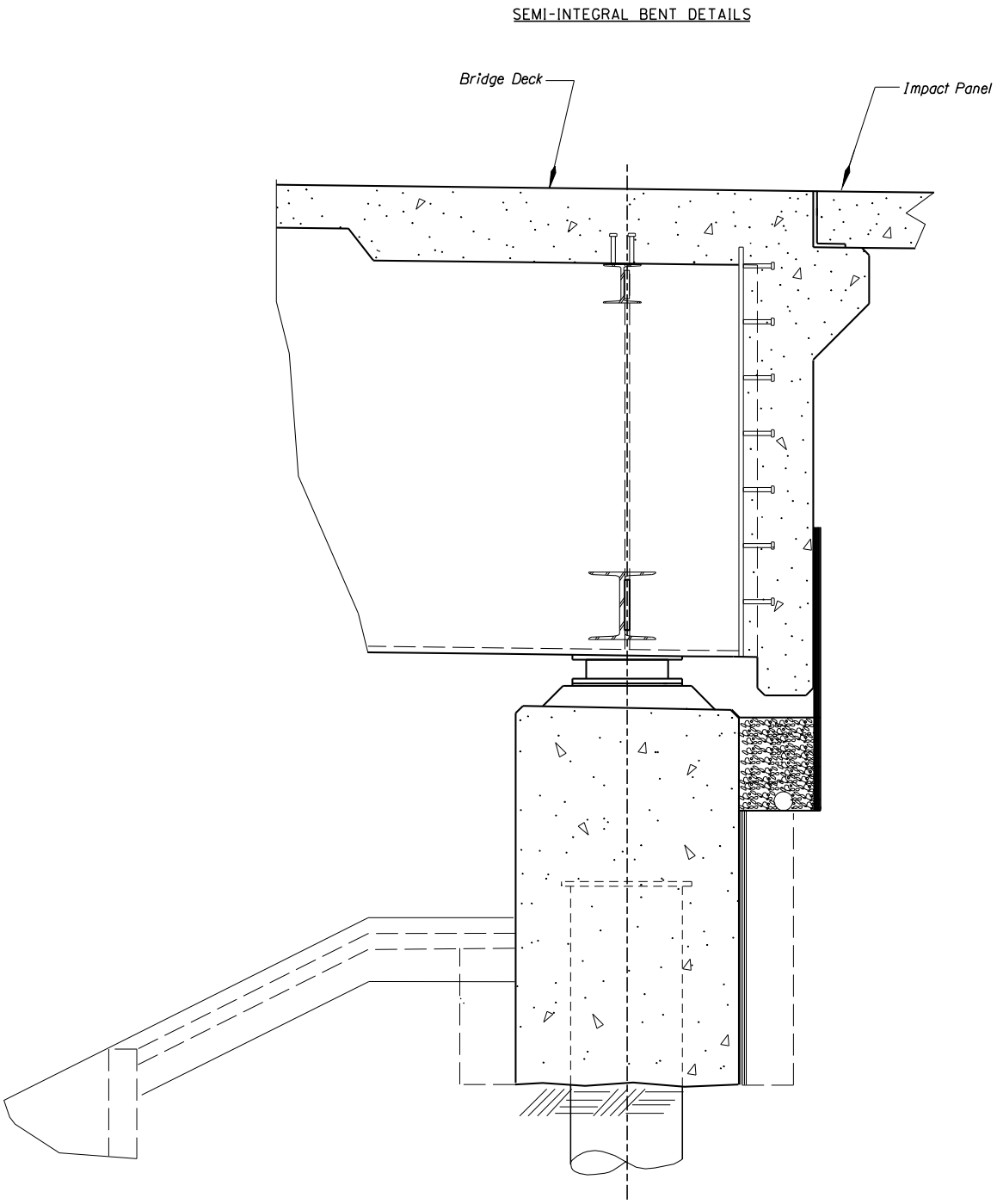

Figure 1.6.1.10B

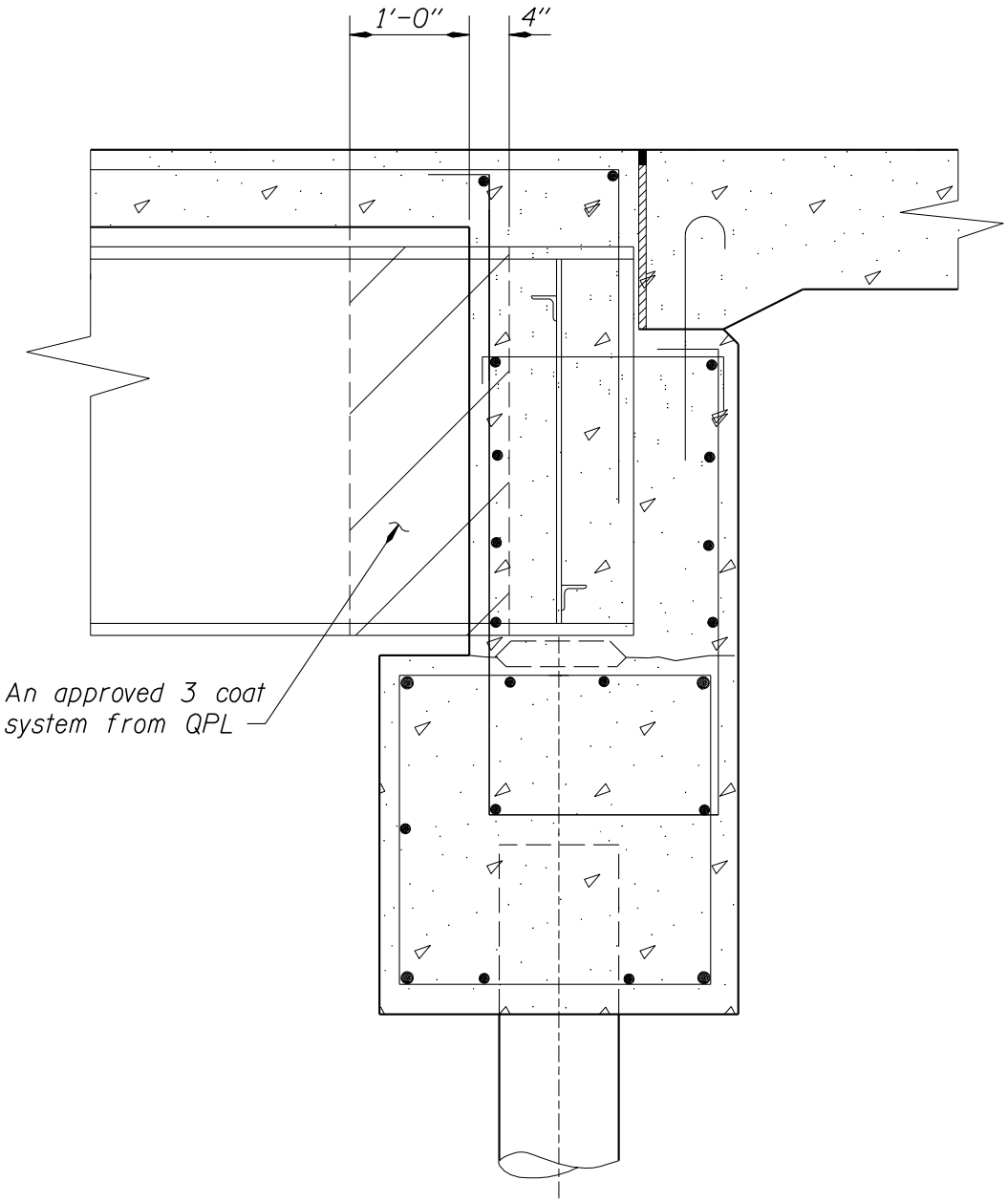

Figure 1.6.1.10C

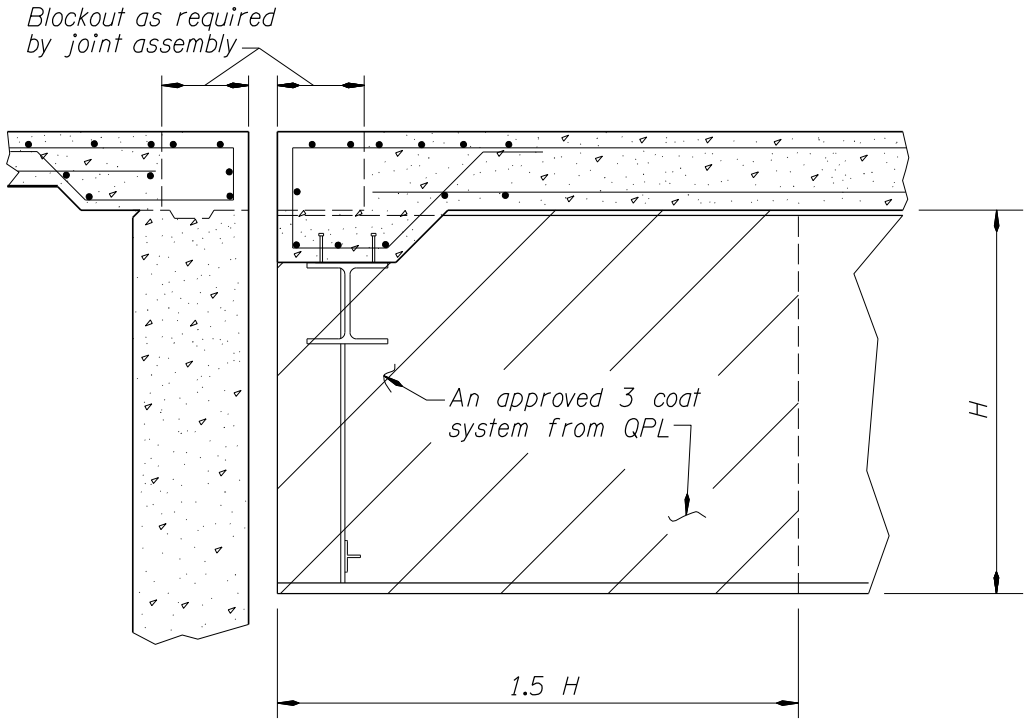

Figure 1.6.1.10D

1.6.1.11 Expansion Joint Blockouts

Show a blockout detail on the plans to allow the expansion joint assembly to be placed a period of time after the final deck pour. Providing a blockout makes the adjacent deck pour easier, provides smoother deck transition to joint, and allows the majority of the superstructure shrinkage to occur prior to joint assembly placement.

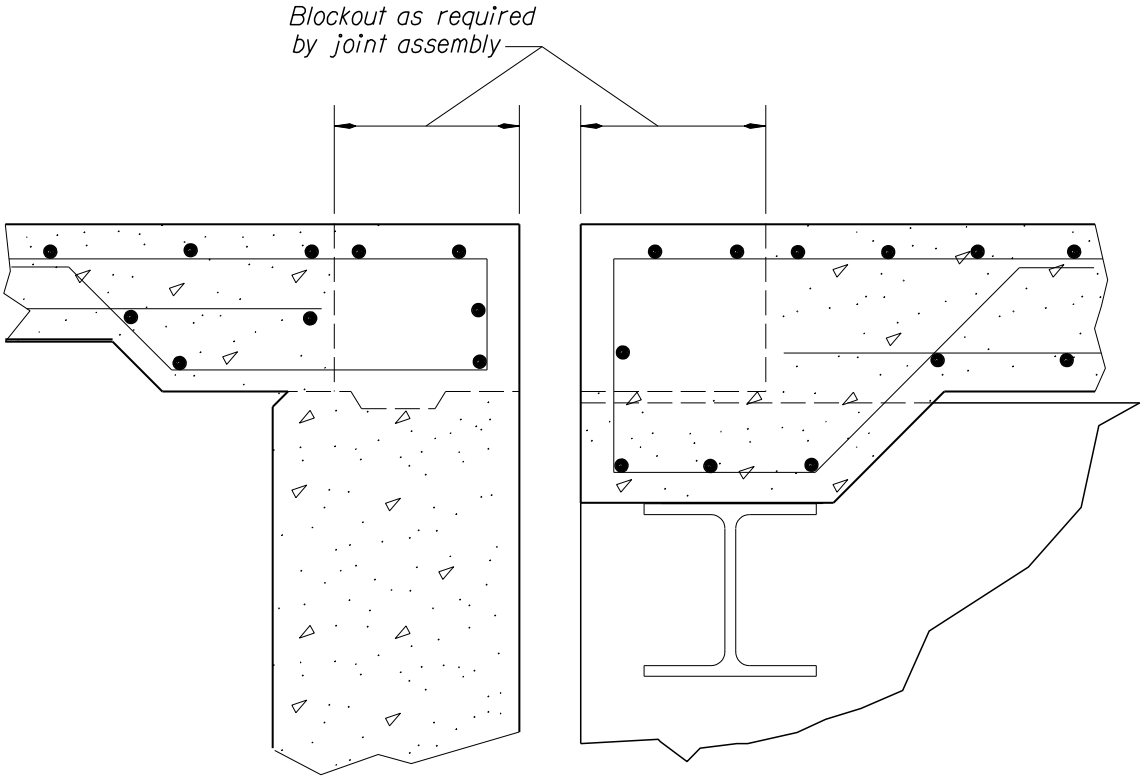

Figure 1.6.1.11A

1.6.1.12 Bearings

Due to high cost, try to avoid using built up steel bearings, pot bearings, and spherical bearings.

Design integral jointless bridges or use elastomeric bearings wherever possible.

Use circular elastomeric bearings on curved steel girders.

See also *BDDM 1.14.1*.

1.6.1.13 Structure Widenings

Generally, to avoid transferring dead loads from the widening to existing beams, diaphragms are temporarily connected to resist lateral loads only and a closure pour is made between the deck pours. An example is shown below.

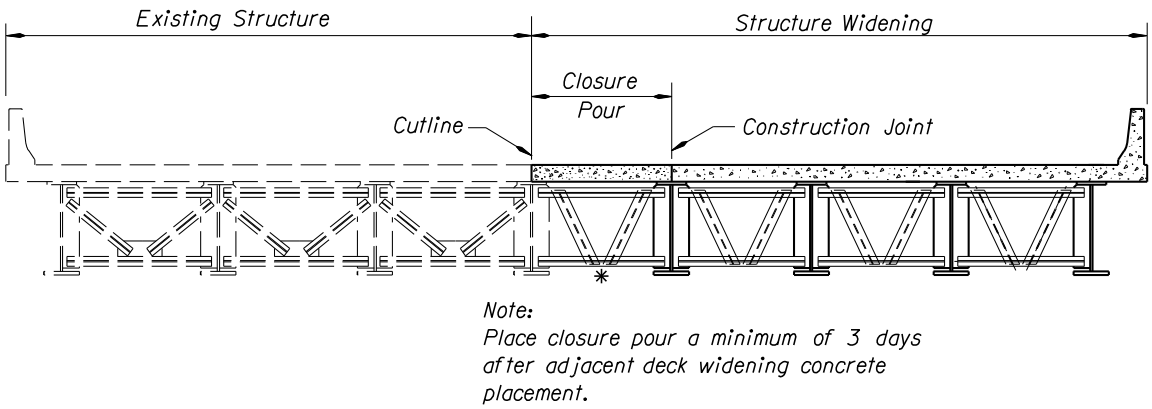

Figure 1.6.1.13A

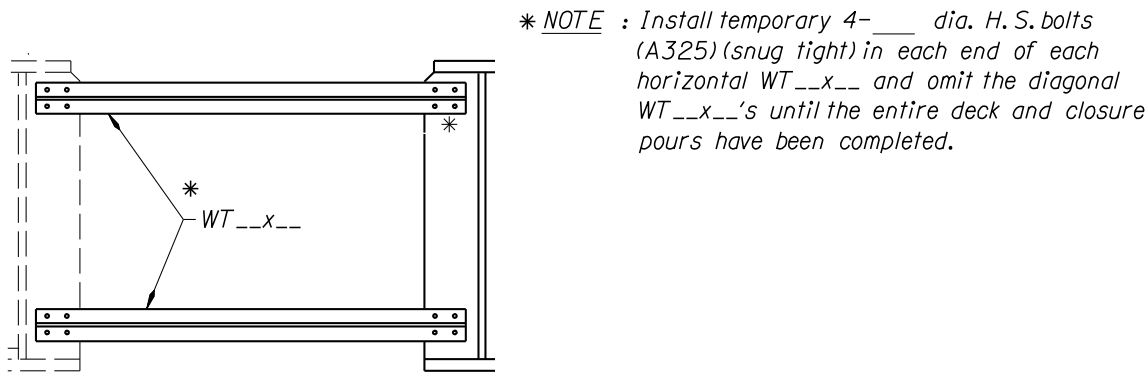

Figure 1.6.1.13B

1.6.2 Welding

1.6.2.1 Welding, General

Technical Assistance – The ODOT Welding Engineer may be consulted for assistance with welded connections.

General categories of welding - The following three categories loosely describe the most common types of welding needed for design work in roadway and bridge sections.

Incidental Structures (AWS D1.1): Welding under this category consists of light structural joining such as handrails, fencing, and sheet metal products. In general the weld is not required to fully develop the strength of the joining parts. Visual inspection of the final product is all that is expected.

General Structural Welding (AWS D1.1): Welding under this category consists of partially or fully developing the strength of the joining parts such as pile splices and attachments, guard rails, signing and lighting support, expansion joints(unless prefabricated by an approved supplier), seismic restraint fixtures and bearings (unless directly welding to main structural elements of a bridge). In general the weld will develop the ultimate strength of the joining parts but is not expected to provide maximum fatigue life *unless nondestructive testing is specified for acceptance.*

Structural Welding of Reinforcing Steel (AWS D1.4): Welding under this category consists of splicing and/or anchoring either new construction or existing reinforcing steel in concrete columns and girders. Note that *LRFD 9.7.2.5* does not allow welded splices of bridge deck reinforcement due to fatigue considerations. The particular weld joint design usually consists of either flare-bevel welds or butt joints with back up bars see *BDDM 1.11.3.6* for examples. In general it is desired to develop the full strength of the reinforcing steel to be joined. Almost any type of reinforcing steel can be successfully welded provided the chemistry of the steel is known (from either mill certifications or field testing) and an appropriate welding procedure is developed and followed. Unknown steels need to have a sample extracted (approximately 2 to 4 grams) and testing for chemistry. The welding procedure is developed from AWS D1.4 using the carbon equivalent method. This type of welding is almost always performed in the field and thus needs to be monitored by a certified welding inspector (CWI). Acceptance is usually based on visual examination but other methods can be used if the designer is concerned about fatigue. Make sure that the Contractor provides a CWI during field welding.

Bridge Welding (AWS D1.5): Welding under this category consists of fabricating or modifying any main load path carrying members of a bridge that have some or all portions that experience tensile stresses under normal loads. This includes girders, floor beams, stringers, trusses, and hanger assemblies. The member does not necessarily have to be fracture critical. In general the welding is expected to develop both full ultimate strength of the joining parts and maximum fatigue performance. Joint toughness and nondestructive testing are typically required for acceptance.

Certification of Steel Fabricators: Special Provision Section *00560.30* requires the American Institute of Steel Construction (AISC) Category CBR (Major Steel Bridges) Certification for fabricators of structural steel bridges. If the structure is Fracture Critical, the fabricator also is required to have the AISC Fracture Critical endorsement.

Typical pathways for successful welding in your design:

Incidental welding:

1) Specify the welds needed on the drawings (type, size, and length).

2) In general welding procedure specifications and welder certification are not required to be submitted.

3) Quality assurance will be based on general appearance (visual testing) only. If you want a trained person to inspect the workmanship send a copy of the plans to the ODOT Portland Materials Inspection Crew. The same inspectors will also check for quality of painting and galvanizing. If the workmanship is poor then the parts can be rejected.

General Structural Welding:

1) Specify the welds needed on the drawings (type, size, and length). Even though the Standard Specifications invoke AWS D1.1 welding code for all incidentals structures, it is recommended that the following statement be included on the drawings (usually the plan and elevations):

"All welding shall conform to the AWS D1.1 Structural Welding Code."

2) Generally welding procedure specifications (WPS) and welder certification are required to be submitted and approved. Any shop drawings that have welding shown are not legally approved until the WPS are approved under AWS D1.1.

3) Quality assurance is typically based on visual inspection by a certified welding inspector (CWI) and may also incorporate nondestructive testing such as ultrasonic (UT), radiographic (RT), and magnetic particle (MT) testing if specified on the design drawings. Various stages of the fabrication process may also be monitored if necessary. It is recommended that a copy of all plans and specifications that require this category of welding be sent to the ODOT Portland Materials Inspection Crew.

Reinforcing Steel Welding:

1) Specify the welds needed on the drawings (type, size, and length).

2) In the general notes for the job, put the following:

"All reinforcing steel welding shall conform to AWS D1.4 Structural Reinforcing Steel"

3) If the steel is not ASTM A615 or A706 a field chemistry sample needs to be extracted and analyzed for the carbon equivalent. The welding procedure shall be based on this information. If the steel is A615 or A706 the D1.4 welding code has recommended heat inputs.

4) Inform the ODOT Portland Materials Office of the work and have a CWI review the welding procedure, welder certification and observe the welding.

Bridge Welding:

1) Specify the welds needed on the drawings (type, size, and length). Calling out the specific weld ID number (i.e. TC-U4a is an example) is preferable but not required. *Typically this category of welding requires a significant Quality Assurance (QA) effort so please include this in your construction cost estimate.*

Even though the Standard Specifications invoke AWS D1.5 welding code for all bridge welding it is recommended that the following statement be included on the drawings (usually the plan and elevations):

"All welding shall conform to the AWS D1.5 Bridge Welding Code."

2) Welding procedure specifications (WPS) and welder certification are required to be submitted and approved by the Engineer of Record. Any shop drawings that have welding shown are not legally approved until the WPS are approved under AWS D1.5.

3) Quality assurance is based on a more complicated Owner/Fabricator relationship that involves frequent inspections during the entire fabrication and erection process. Most individuals involved have stringent requirements for their duties including certified welders, inspectors, fabricators, and testing personnel. Most welding in this category requires some form of nondestructive testing for acceptance. Theoretically all materials and processes are traceable with archived documentation. A copy of all plans and specifications that require this category of welding shall be sent to the ODOT Portland Materials Inspection Crew.

1.6.2.2 Fillet Welds

When adequate structural performance from fillet welds in "T" and corner joints can be obtained, use fillet weld in preference to groove welds. Fillet welds can be non-destructively inspected with greater certainty of result and at lower cost. The minimum fillet weld size for prequalified joints is shown below:

Material Thickness of Thicker Part Joined (T) (in)	Minimum Size* of Fillet Weld (in)
To 3/4 inclusive	1/4 **
Over 3/4	5/16 **

* Except that the weld size need not exceed the thickness of the thinner part joined. For this exception, take particular care to provide sufficient preheat to ensure weld soundness.

** Welds of this size must be made in a single pass.

Size fillet welds in accordance with AASHTO LRFD Design Specifications.

Web to flange connection

The minimum fillet weld necessary to join the flange to the web shall be used. This size will vary along the length of the girder depending on the size of the plates being joined.

Shear stress capacity of fillet welds (equal legs):

- LRFD Design - $F_v = 0.6 \times 0.8 F_{exx} \times 0.707\text{"t"}$ (LRFD 6)

where: F_{exx} = 58,000 psi for Grade 36 Steel
F_{exx} = 65,000 psi for Grade 50 Steel
"t" = length fillet leg

Fillet Weld Capacity - LRFD Design (lb/in)		
Leg Length "t" (in)	Grade 36 Steel	Grade 50 Steel
3/16	3690	4135
1/4	4920	5510
5/16	6150	6890
3/8	7380	8270
7/16	8610	9650
1/2	9840	11,025
9/16	11,070	12,405
5/8	12,300	13,785

Figure 1.6.2.2A

1.6.2.3 Flange Welds

The design tensile stress in butt welded joints may equal the allowable stress in the base metal.

Show flange butt weld splices as in the detail below. Include this detail on all steel structure plans. Indicate the type of butt weld splice for each splice on the plans. This may be accomplished by:

- Adding the word "tension" or "compression", whichever is the case, to the tail of the weld symbol.
- Indicating which flanges or which portions of the flanges are in compression (C) and which are in tension (T).

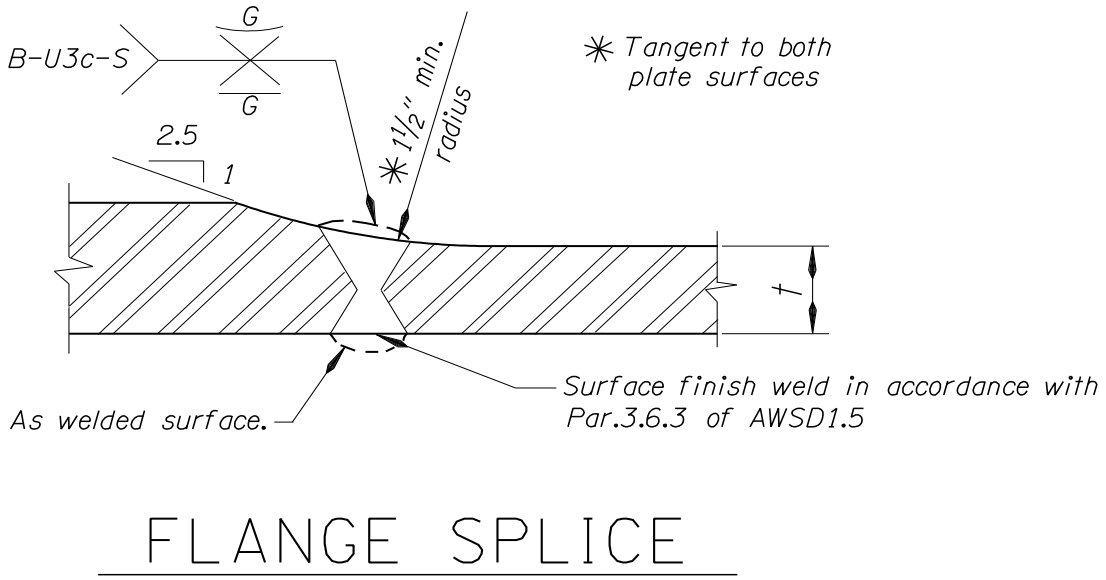

Figure 1.6.2.3A

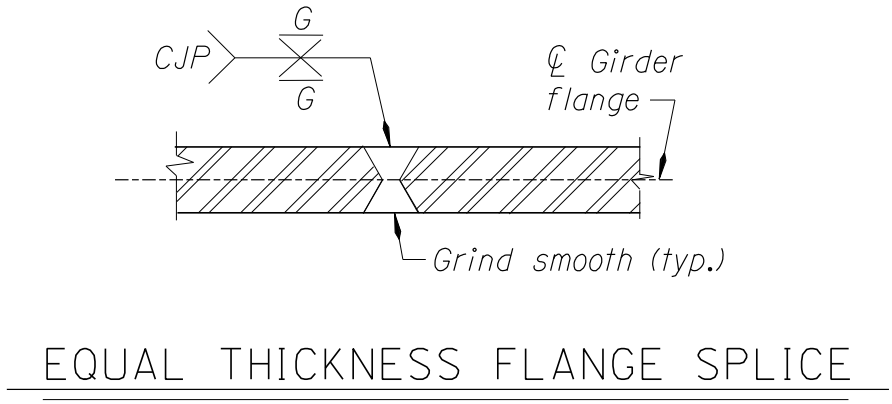

Figure 1.6.2.3B

1.6.2.4 Welded Web Splices in Steel Bridge Girders

Use complete joint penetration butt weld in web splices. The weldments reinforcing shall be ground off 100 percent of all web splices. To facilitate NDE during fabrication, specify on the design drawings which portion of the girder webs are tension and compression. (see *Figures 1.6.2.4A and 1.6.2.4B*)

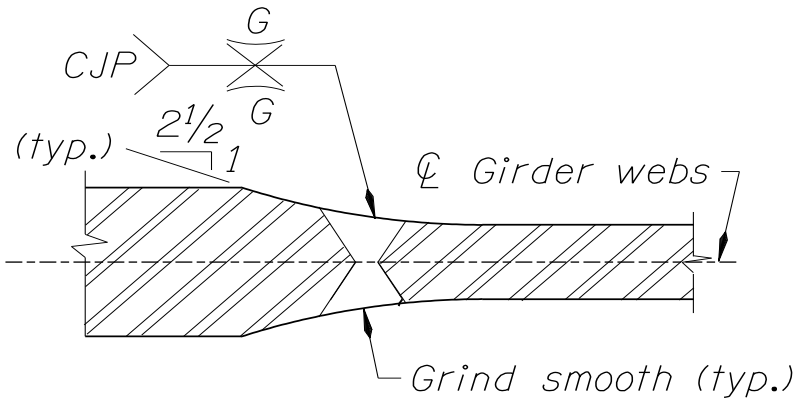

UNEQUAL THICKNESS WEB SPLICE

Figure 1.6.2.4A

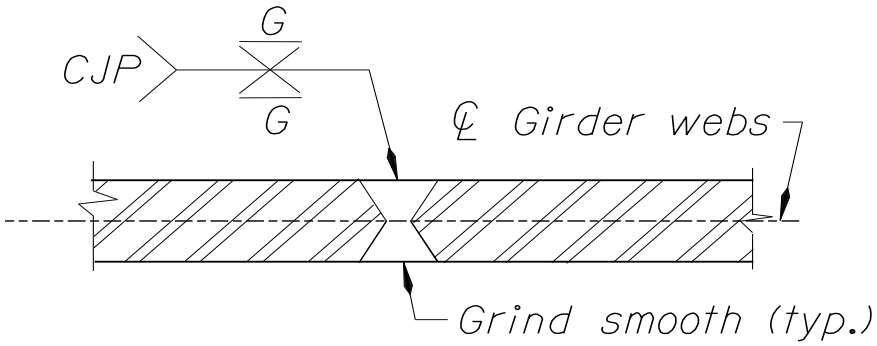

EQUAL THICKNESS WEB SPLICE

Figure 1.6.2.4B

1.6.3 Galvanizing and Painting

1.6.3.1 Processes

Galvanizing is a process of applying a sacrificial metal (zinc) to a base metal. The zinc will corrode, or sacrifice itself, to protect the base metal. Hot-dip galvanizing involves cleaning the items with a combination of caustic and acidic solutions and the dipping them into a tank of molten zinc for a specified period of time. After removal, small items are spun to remove excess zinc.

Mechanical galvanizing involves cleaning as mentioned above and then loading the items in a multi-sided rotating barrel. The barrel contains a mixture of various sized beads and water. As the barrel turns, chemicals and powdered zinc are added. The collision between the items, the glass beads and zinc causes the zinc to cold weld to the part. Powdered zinc is added until the required thickness is obtained.

Hot-dip galvanizing has proven to provide better long term corrosion protection and should be required for all galvanized items.

1.6.3.2 Detailing

To ensure proper hot-dip galvanizing, venting and drain holes must be provided in details. These insure proper circulation and removal of cleaning solutions and the molten zinc. They may also prevent potential explosions during dipping caused by trapped air.

A minimum vent opening of 25 to 30 percent of the cross-sectional area of a tubular section should be provided if full open venting is not possible. Provide drains holes at closed corners or clip all corners at gusset plates to allow complete drainage.

1.6.3.3 Silicon Control

The silicon content of the steel influences the corrosion resistance and strength of the galvanized coating and the thickness of the zinc layer. The silicon content of the steel must be held within either of the range of 0 to 0.04 percent, or 0.15 to 0.25 percent to obtain and maintain a pleasing appearance. All members that will have visual impact should be called out on the drawings with "GALVANIZE-CONTROL SILICON". Examples of these members are the chords, posts and diagonals of sign bridges; arms and shafts of luminaire, sign and signal support structures; steel traffic rail posts and railing members and pedestrian railings.

For economic reasons, silicon need not be controlled in galvanized structural members that are hidden from motorist view or are too small to have significant visual impact. Generally, these members that are too small to have significant visual impact are steel shapes whose least dimension does not exceed 3 inches.

An example of an exception is pedestrian rail members that should have silicon control. Examples of hidden members and others which for practical reasons do not require silicon control are base plates and guard rail connection plates, flex-beam rails and their posts and single-post, breakaway sign posts.

The general notes on each contract drawing that includes members are to be called out as "Galvanize-Control Silicon". The specification for control of silicon in steels to be galvanized is included in the Standard Specifications for Construction.

1.6.3.4 Painting or coating of new or existing metal

This work consists of preparing and coating new metal structures and features in the shop and in the field, and preparing and coating existing metal structures. This includes all:

- Interior and exterior steel surfaces
- Steel railings, bridge bearings, and bridge expansion joint assemblies
- Other miscellaneous steel

Coating of the metal structures shall be in conformance to the current Section *SP 00594* and supplemental specifications.

1.6.3.5 Process for recoating of an existing metal structure

Be aware of an existing structure's condition prior to completing TS&L of a recoating project. Recoating of an existing bridge is very costly and requires a careful examination of the structure's condition. Older structures are typically painted and have potential deficiencies that may need to be addressed during a recoating project. Collect all necessary information for such project which is not limited to following:

- Check latest available load rating of steel bridge
- Perform load rating of bridge when structure has not been load rated or the current structural conditions have deteriorated from the conditions used in calculate a load rating
- Consider remedy to strengthening the structure, if needed, and the related cost
- Verify whether there are rivets or bolts that need to be replaced. Check with the ODOT Region Bridge Inspector

Include additional costs for access, paint removal and recoating rivet or bolt replacements, if rivets or bolts are outside normal paint area limits.

1.6.4 Bolts and Connections

Design all high-strength bolted connections as slip-critical connections.

1.6.4.1 High Strength Bolts

High-Strength Bolt Use Guidelines:

- AASHTO M164 (ASTM A325) - Headed structural bolt for use in structural connections. These may be hot-dip galvanized. Do not specify for anchor bolts.

- Use Type 3 bolts conforming to AASHTO M164 (ASTM 325) when specifying weathering steel.

- ASTM A449 - Steel bolts and studs for general applications including anchor bolts. Recommended for use as anchor bolts where strength equal to A325 is required.

- ASTM A490 - Alloy steel headed structural bolt for use in structural connections. Do not use A490 bolts in bridge applications. If there is a compelling reason to use A490 bolts, request a BDDM Deviation. If a deviation is approved, these bolts should not be galvanized because of high susceptibility to hydrogen embrittlement. Instead of galvanizing, require two or three coats of approved zinc rich paint. Do not specify for anchor bolts.

1.7 ALUMINUM

Outline:

1.7.1 Aluminum

1.7.1 Aluminum

(Reserved for future use)

1.8 TIMBER BRIDGE DESIGN AND DETAILING

Outline:

1.8.1 Timber Bridge Locations

1.8.2 Timber Design and Details

1.8.3 Timber Connections

1.8.4 Timber Rails

1.8.5 Preservative Treatments

1.8.6 Field Installation

1.8.1 Timber Bridge Locations

Timber structures may be considered as an alternate to concrete structures on low volume highways or roads with and ADT of less than 500, especially for sites located away from possible concrete sources. Timber bridges are generally best suited to the drier climate east of the Cascade Mountains. Consult the individual Regions in the early stages of a project to determine whether a timber bridge is desired.

1.8.2 Timber Design and Details

Before specifying structural grades for timber members, check with the fabrication industry for actual availability.

Unless timber is submerged, it may be considered dry for design.

ODOT does not design composite wood-concrete structures and has no corresponding construction specifications.

For structures carrying only pedestrian and/or bicycle traffic, the maximum allowable live load deflection is:

- For simple or continuous spans span/360
- For cantilever arms arm length/135

Glued laminated timber bridges

Glued laminated timber bridge single spans are generally feasible up to 50 feet. To achieve longer spans, consider cantilever techniques. The width of glued laminated beams should be generally be limited to 10-3/4” or less, but 12-3/4”, 14-3/4”, and 16-3/4” widths are available for extra cost.

Some consideration should be given to performance specification for glued laminated timber members. Identifying actual stresses for bending, horizontal shear, etc., is preferred by the fabrication industry instead of specifying an actual glued laminated timber grades.

The preference of the Bridge Section at this time is the use of a non-interconnected glued laminated timber deck as opposed to an interconnected glued laminated timber deck. A longitudinal timber stiffener under the deck between longitudinal beams for transverse deck bridges may be beneficial for differential deflection control.

A glued laminated longitudinal deck bridge is a possible solution for short spans (under 25 feet) with a tight freeboard clearance requirement. These deck members could be used in a continuous span arrangement to increase member efficiency.

All glued laminated timber decks should have a waterproofing membrane with an asphalt wearing surface.

For smaller timber members, such as posts, rails, etc., specifying solid sawn timber as an option to glued laminated timber may be more cost effective.

Timber substructures are not recommended.

1.8.3 Timber Connections

Use of the "Weyerhaeuser clip" to connect timber decking to timber beams allow for easy fabrication and installation of the timber members.

Steel diaphragm beams, as opposed to timber diaphragm beams, between longitudinal glued laminated timber beams are recommended.

Use slotted holes whenever possible in the steel connectors to allow for shrinkage and expansion of the wood, and for construction tolerances.

1.8.4 Timber Rails

A crash-tested rail has been completed for a longitudinal glued laminated timber deck bridge. Several other glued laminated timber bridge configurations will be crash-tested in the near future. Thrie beam railing can be used as an alternate in lieu of timber.

1.8.5 Preservative Treatments

Pentachlorophenol Type A (heavy solvent) or Pentachlorophenol Type C (light solvent) is recommended for most locations as a preservative treatment.

Eliminate all field cuts and bores if possible. Any field modifications should be treated with copper napthanate.

1.8.6 Field Installation

Shop assembly of the timber bridge components immediately after fabrication is recommended to eliminate any possible future field installation problems, especially on more complicated projects.

Field staking of the structure before fabrication is recommended to eliminate any future installation problems.

1.9 DECKS

Outline:

1.9.1 Design and Detailing

1.9.2 Deck Screeding

1.9.3 Deck Construction Joints

1.9.4 Deck Overlays

1.9.1 Design and Detailing

Design

Design decks according to AASHTO *LRFD Bridge Design Specifications*.

Do not use the empirical design method for deck reinforcing steel. Excessive deck cracking, apparently due to under reinforcement, precludes the use of this method until further notice.

For additional deck requirements on Precast Prestressed elements, see *BDDM 1.5.6.1*.

For cast-in-place decks, discount 1/2 inch deck thickness when calculating composite properties for girder/slab systems. For a typical 8 inch deck, 7-1/2 inch would be considered structural and 1/2 inch would be considered a sacrificial wearing surface and included as non-composite dead load.

The preferred orientation of the top mat of deck steel will have the transverse bars on top.

For skewed decks, orient transverse bars according to *LRFD 9.7.1.3*. In skewed box girders, orient bottom slab transverse bars the same as the deck transverse bars. See *BDDM 1.5.7.8* for additional bottom slab requirements. Note the intended bar placement on the bridge contract plans.

Do not use deck reinforcement larger than a #6 bar, except when needed to resist negative moment for continuous-span girders. When the top mat has longitudinal bars on top, any longitudinal reinforcement larger than a #6 bar will need to be placed in the bottom mat.

Unless a project specific deck reinforcement design is developed, use the “Concrete Deck Reinforcement (LRFD Design)”, *Figure 1.9.1A, or 1.9.1B,* for design and detailing.

Ensure project specific deck design conforms to the following minimum requirements:

- Section 4.6.2.1 in the AASHTO LRFD Bridge Design Specifications
- Concrete Class: HPC4000 – 1-1/2, or 1 (except box girder decks that require greater strength)
- Reinforcement: Grade 60
- Reinforcement no larger than #6 bar
- Reinforcement spacing ≥ 5 inches and ≤ 8 inches
- Surface wear allowance = 1/2 inch
- Limit top of concrete compressive service stress due to positive moment in the deck (between girders) to 1650 psi.

Note that *LRFD 5.7.3.4* (Control of Cracking by Distribution of Reinforcement) is applicable for negative moment steel for bridges made continuous for live load, but is not applicable to bridge deck slab reinforcement. The 8 inch maximum bar spacing is adequate to control cracking in bridge decks.

Submit a design deviation request to the State Bridge Engineer for any concrete bridge deck designs not meeting any one of the minimum requirements in *Figures 1.9.1A, or 1.9.1B*. With the request, include the following:

- Design loading assumptions (dead, live, and future wearing surface)
- Documentation of which minimum requirements were met and which were not met
- Orientation of the top mat (longitudinal on top or transverse on top)
- Deck thickness
- Maximum service stress in the top of the deck due to positive moment in the deck (between girders)
- Maximum service stress in the bottom of the deck due to negative moment in the deck (over a girder)

Use cast-in-place HPC concrete for all decks. Full-depth precast deck panels may be considered on a case by case basis. An exception letter from the State Bridge Engineer will be required before full-depth precast deck panels can be used. Partial-depth precast deck panels will not be permitted.

CONCRETE DECK REINFORCEMENT (LRFD DESIGN) with TRANSVERSE BARS ON TOP
Steel Girders & Cast-in-Place Concrete box Girders - Simple Spans

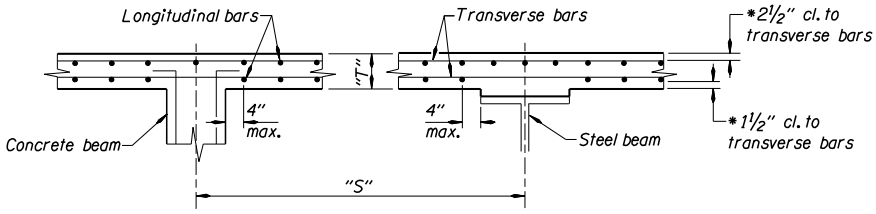

Assumptions
Specifications: AASHTO (Section 4.6.2.1)

Concrete Class: HPC 4000

Reinforcement: Grade 60

Top Mat Orientation: Transverse bars on top

Dead Load: 150 pcf + 50 psf future wearing surface

Deck DL moments: Negative -0.10wS°2
Positive +0.08wS°2

Live Load: Table A4-1 using 6" from ℄ of girder to the negative moment design section

Design Moment: 1.25*DL + 1.5*DW +1.75*LL
(Impact included in Table A4-1 live loads)

Surface wear: ½" allowance for surface wear subtracted from positive moment "d"

Steel Girders: Top flange width not less than 24". Project specific design is required when top flange is less than 24".

Concrete Box Girders: Girder stem width not less than 12". For girder stem greater than or equal to 16", use Deck Design Chart for Precast P/S Concrete Members

Note:
Additional reinforcement to accomodate rail loads at deck overhangs is not included in these details. The designer is responsible for design of overhangs.

Note:
"S" is measured parallel to the transverse bars. Bar spacing is measured perpendicular to the bars.

Place bottom mat bars directly below and in line with a top mat bar. At expansion and construction joints, however, it is not neccessary for all bottom mat bars to be directly below a top mat bar.

* For coastal locations, specify 2" clear top and bottom. See also Section 1.1.25.3 for additional corrosion protection recommendations.

Steel Girders & CIP Concrete Box Girders

Girder Spacing	Deck Thickness	Transverse Bars	Longitudinal Bars
5'-0"	8"	#4 @ 6½"	#4 @ 8"
5'-3"	8"	#4 @ 6½"	#4 @ 8"
5'-6"	8"	#4 @ 6½"	#4 @ 8"
5'-9"	8"	#4 @ 6½"	#4 @ 8"
6'-0"	8"	#4 @ 6"	#4 @ 8"
6'-3"	8"	#4 @ 6"	#4 @ 8"
6'-6"	8"	#4 @ 6"	#4 @ 8"
6'-9"	8"	#4 @ 6"	#4 @ 8"
7'-0"	8"	#4 @ 5½"	#4 @ 8"
7'-3"	8"	#4 @ 5½"	#4 @ 8"
7'-6"	8"	#4 @ 5½"	#4 @ 8"
7'-9"	8"	#4 @ 5½"	#4 @ 8"
8'-0"	8"	#5 @ 7½"	#5 @ 8"
8'-3"	8"	#5 @ 7½"	#5 @ 8"
8'-6"	8"	#5 @ 7½"	#5 @ 8"
8'-9"	8"	#5 @ 7"	#5 @ 8"
9'-0"	8¼"	#5 @ 7"	#5 @ 8"
9'-3"	8¼"	#5 @ 7"	#5 @ 8"
9'-6"	8½"	#5 @ 7"	#5 @ 8"
9'-9"	8½"	#5 @ 7"	#5 @ 8"
10'-0"	8¾"	#5 @ 7"	#5 @ 8"
10'-3"	8¾"	#5 @ 6½"	#5 @ 8"
10'-6"	8¾"	#5 @ 6½"	#5 @ 8"
10'-9"	9"	#5 @ 6½"	#5 @ 8"
11'-0"	9"	#5 @ 6"	#5 @ 8"
11'-3"	9"	#5 @ 5½"	#5 @ 8"
11'-6"	9¼"	#5 @ 5½"	#5 @ 8"
11'-9"	9¼"	#5 @ 5½"	#5 @ 8"
12'-0"	9½"	#5 @ 5½"	#5 @ 8"
12'-3"	9½"	#5 @ 5½"	#5 @ 8"
12'-6"	9¾"	#5 @ 5½"	#5 @ 8"
12'-9"	9¾"	#5 @ 5"	#5 @ 8"
13'-0"	10"	#5 @ 5"	#5 @ 8"
13'-3"	10"	#5 @ 5"	#5 @ 8"
13'-6"	10¼"	#5 @ 5"	#5 @ 8"
13'-9"	10¼"	#5 @ 5"	#5 @ 8"
14'-0"	10½"	#5 @ 5"	#5 @ 8"
14'-3"	10½"	#5 @ 5"	#5 @ 8"
14'-6"	10¾"	#5 @ 5"	#5 @ 8"
14'-9"	10¾"	#5 @ 5"	#5 @ 8"
15'-0"	11"	#5 @ 5"	#5 @ 8"

Figure 1.9.1A

CONCRETE DECK REINFORCEMENT (LRFD DESIGN) with TRANSVERSE BARS ON TOP
Standard Precast Prestressed Concrete members - Simple Spans

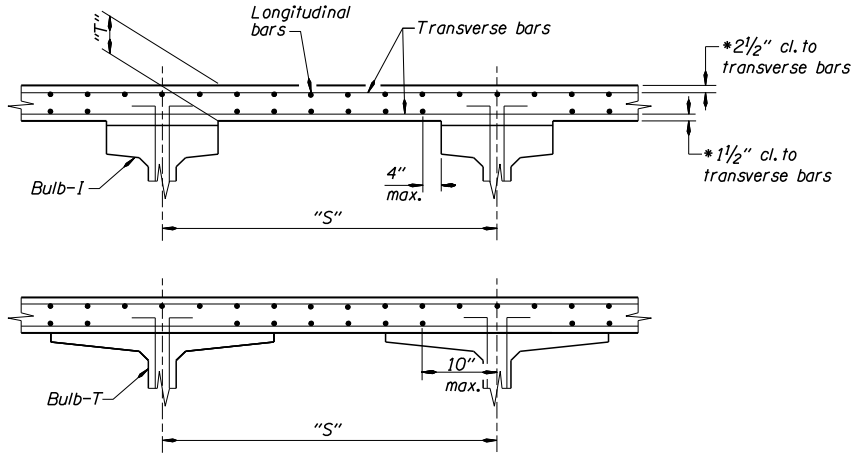

Assumptions

Specifications: AASHTO (Section 4.6.2.1)

Concrete Class: HPC 4000

Reinforcement: Grade 60

Top Mat Orientation: Transverse bars on top

Dead Load: 150 pcf + 50 psf future wearing surface

Deck DL moments: Negative -0.10wS°2 Positive +0.08wS°2

Live Load: Table A4-1 using 8" from ℄ of girder to the negative moment design section

*Design Moment: 1.25*DL + 1.5*DW +1.75*LL (Impact included in Table A4-1 live loads*

Surface wear: ½" allowance for surface wear subtracted from positive moment "d"

> *Note:*
> *Additional reinforcement to accomodate rail loads at deck overhangs is not included in these details. The designer is responsible for design of overhangs.*

Note:
"S" is measured parallel to the transverse bars. Bar spacing is measured perpendicular to the bars.

Place bottom mat bars directly below and in line with a top mat bar. At expansion and construction joints, however, it is not neccessary for all bottom mat bars to be directly below a top mat bar.

** For coastal locations, specify 2" clear top and bottom. See also Section 1.1.25.3 for additional corrosion protection recommendations.*

Precast Prestressed Concrete Members

Girder Spacing	Deck Thickness	Transverse Bars	Longitudinal Bars
5'-0"	8"	#4 @ 6½"	#4 @ 8"
5'-3"	8"	#4 @ 6½"	#4 @ 8"
5'-6"	8"	#4 @ 6½"	#4 @ 8"
5'-9"	8"	#4 @ 6½"	#4 @ 8"
6'-0"	8"	#4 @ 6"	#4 @ 8"
6'-3"	8"	#4 @ 6"	#4 @ 8"
6'-6"	8"	#4 @ 6"	#4 @ 8"
6'-9"	8"	#4 @ 6"	#4 @ 8"
7'-0"	8"	#4 @ 5½"	#4 @ 8"
7'-3"	8"	#4 @ 5½"	#4 @ 8"
7'-6"	8"	#4 @ 5½"	#4 @ 8"
7'-9"	8"	#4 @ 5"	#4 @ 7"
8'-0"	8"	#5 @ 8"	#5 @ 8"
8'-3"	8"	#5 @ 7½"	#5 @ 8"
8'-6"	8"	#5 @ 7½"	#5 @ 8"
8'-9"	8"	#5 @ 7"	#5 @ 8"
9'-0"	8¼"	#5 @ 7"	#5 @ 8"
9'-3"	8¼"	#5 @ 7"	#5 @ 8"
9'-6"	8½"	#5 @ 7"	#5 @ 8"
9'-9"	8½"	#5 @ 7"	#5 @ 8"
10'-0"	8½"	#5 @ 7"	#5 @ 8"
10'-3"	8½"	#5 @ 6½"	#5 @ 8"
10'-6"	8¾"	#5 @ 6½"	#5 @ 8"
10'-9"	8¾"	#5 @ 6½"	#5 @ 8"
11'-0"	9"	#5 @ 6½"	#5 @ 8"
11'-3"	9"	#5 @ 6"	#5 @ 8"
11'-6"	9¼"	#5 @ 6"	#5 @ 8"
11'-9"	9¼"	#5 @ 6"	#5 @ 8"
12'-0"	9½"	#5 @ 6"	#5 @ 8"

Figure 1.9.1B

Detailing

Wearing surface on cast-in-place concrete decks - Normally, structures with cast-in-place decks will not have an AC wearing surface.

However, Region may be concerned with icing conditions on a short concrete bridge deck section and request ACWS on the deck. If an ACWS is used, a waterproofing membrane is normally required. If a Class "F" mix (free draining) is used, special attention needs to be given to drainage details at joints and deck drains to prevent trapping water adjacent to these areas.

For typical deck steel placed in two mats, place bottom mat bars such that each bottom mat bar is directly below and in line with a top mat bar. At deck expansion joints and at deck construction joints, however, it is not necessary for all bottom bars to be directly below a top bar.

Inlaid Durable Striping on Bridge Decks – Concrete deck surface removal of up to 1/4" is acceptable for placing longitudinal inlaid striping on new bridges. Placement of such striping will likely reduce wear at stripe locations. In nearly all cases, the majority of wear for concrete bridge decks occurs within the travel lane. Therefore, 1/4 inch maximum removal should not significantly impact bridge load capacity.

Allow concrete removal using a diamond grinder according to *SP 00503*. Note that SP 00503 also permits removal by micro-milling and by hydroblasting. However, only diamond grinding should be allowed for striping applications. Note that *SP 00850* also requires diamond grinding equipment for installation of inlaid/grooved pavement markings.

Do not allow inlaid striping on concrete decks where the striping would be placed in the transverse direction. Concrete removal for such striping would reduce the load capacity of the bridge.

Do not allow rumble strips on concrete bridge decks.

For existing concrete bridge decks, allow inlaid striping only in the longitudinal direction and in locations where there is no significant rutting or other deck wear.

Allow raised pavement markers on concrete bridge decks only when they can be installed without removal of any deck concrete (no grooving).

For bridges with an asphalt concrete wearing surface, grooving up to 5/8” depth for striping (longitudinal or transverse) or rumble strips is acceptable. Do not use the need for striping or rumble strips as a basis to place an asphalt concrete wearing surface over a concrete bridge deck.

Vibrations

Vibrations from adjacent traffic and/or construction activity are not likely to cause cracking in freshly placed deck concrete. One ODOT project recorded vibrations up to 0.6 in/sec during a second stage deck placement with only minor deck cracking near the closure area. Typical deck closure placements may have even higher vibrations. For this reason, minor cracking can be expected in deck closures placed under traffic. However, this cracking rarely results in long-term maintenance concerns. See the “Deck Closure Pours” discussion below for a discussion of closure pour options.

The following is a very rough guide to vibration levels:

0.08 in/sec	vibrations perceptible
0.1 in/sec	continuous vibrations may begin to annoy people
0.2 in/sec	short-term vibrations may begin to annoy people
0.4 to 0.6 in/sec	typical max. short-term vibration, concrete bridge < 100 foot span
0.6 to 1.0 in/sec	typical max. short-term vibration, concrete bridge > 100 foot span

Although damage to concrete due to vibrations is rare, unnecessary vibrations should still be avoided where reasonable measures can be taken. For staged construction, providing deck closure segments is preferred to minimize both vibrations and the effects of adding additional deck dead load, creep and shrinkage to the first stage.

Providing either a joint or closure segment between substructure (cap) stages will also reduce potential for traffic vibrations to be transmitted through those elements.

Where there is a concern that vibrations may be excessive, the following practices can be considered as mitigation:

- Low-slump concrete – Although concrete damage due to vibrations is rare, use of low-slump concrete (greater than 4 inches) will minimize the risk. ODOT's HPC deck concrete mix is generally a low-slump mix that meets this requirement. Therefore, no change to the standard HPC deck concrete mix should be necessary.
- Reinforcing details – Do not use hooked bars in closure segments. Ensure lap splices are in contact and well-tied as much as possible. Where lap splices cannot be in contact, use two rows of longitudinal bars tied to both lap splice segments to create a rebar mat that cannot be easily moved.
- Retarder admixture – Varying amounts of set retarder admixture can be used such that the entire deck will set up at about the same time. The Structure Quality Engineer from the ODOT Construction Section can assist in determining when this admixture is needed and how to apply it.
- Reduce vehicle speed – Where vibration is due to adjacent traffic, reducing vehicle speed will generally reduce the amount of vibrations. However, vehicle speeds will generally need to be reduced down to around 15 mph before a significant reduction in vibrations can be obtained. Therefore, this measure should only be considered in extreme circumstances. Where possible, moving traffic laterally from an adjacent deck placement will likely be more effective than reducing vehicle speed.

Deck Closure Pours

Where deck closures are placed under traffic, minor cracking within the closure can be expected. This cracking is typically minor and does not result in significant long-term maintenance. The amount of cracking expected will be a function of the traffic induced vibrations at the site. For sites where traffic vibrations are expected to be high, addition of polypropylene fibers to the closure concrete mix can be considered for mitigation of potential cracking. The amount of polypropylene fibers would typically be 3 pounds of polypropylene fibers per cubic yard of concrete. **Consult with the Structure Materials Engineer to confirm the need for fibers and the actual concentration of fibers needed.**

The following conditions may warrant the use of polypropylene fibers in a deck closure:

- Interstate routes and other high-speed highways with high traffic volumes <u>and</u> with traffic within 2 girder spacing of the closure
- Steel bridges with spans >120 feet
- Long-span concrete bridges
  - >120 feet span with integral abutments
  - >150 feet span without integral abutments

1.9.1.1 Precast Concrete Deck Panels

Standard Details are available for Precast Concrete Deck Panels to be used with precast concrete girders and steel girders. The purpose of using these panels is to allow accelerated construction of bridge decks. The panels are to be constructed in a precast plant using Class HPC8000 concrete. They are prestressed using 0.5 inch diameter strands placed parallel to the long side of the panel which spans between the girders. The strands provide flexural strength for bending under vehicular live load.

Two types of deck panels are included in the Standard Details. One type provides longitudinal post-tensioning in the deck panels along the length of the bridge to provide continuity between the deck panels at transverse joints. The other type is non-post-tensioned and has cast-in-place reinforced transverse joints at panel connections to provide continuity. The design team may choose either the post-tensioned or the cast-in-place joint option. However, the only satisfactory Ultra High Performance Concrete (UHPC) joint material on the market is Ductal® JS1000 by Lafarge North America, Inc. Use of this material would require a finding of public interest letter (with approval from FHWA). In addition, Ductal® JS1000 includes steel fibers that are not made in the United States. Therefore, a “Buy America” waiver would need to be approved by FHWA. Approval of the finding of public interest letter and the “Buy America” waiver must be secured before going to bid.

The maximum length of panel is 50 feet. This length is normal to the bridge centerline for non-skewed bridges, and parallel to bent centerline for skewed bridges. For bridges requiring panel lengths longer than 50 feet, two or more panels can be placed in the transverse direction using longitudinal joints as shown in the standard details for the panels. The longitudinal joints are shown midway between girders to avoid conflict with shear connections at the girders. The width of the panels is 9’-6” out-to-out for the non-post-tensioned panels, and 9’-11½” for the post-tensioned panels. The resulting effective width is 10’-0”. In the preliminary project design process, the length of the bridge should be selected to provide an even fit with the effective 10’-0” panel width.

The panels are formed with oval shaped voids placed over the centerline of the bridge girders. These voids provide an opening for vertical reinforcement or shear studs to extend from the top of the girders into the precast deck panels to provide composite action between the beams and the deck.

The amount of prestress strand in the panel varies with the spacing of the girders. The Standard Details show four typical sections that represent four different girder spacing ranges. The number of strands in the panel increases as the beam spacing increases.

The joints between non-post-tensioned panels are 6 inches wide with additional angular keyways. The concrete placed in these joints and in the oval shear connection voids is Ultra High Performance concrete. It has a compressive strength of 20,000 psi. This high strength concrete provides full development of relatively short rebar extensions from one panel to the other. At longitudinal joints, reinforcing bars parallel to the strands are added to the panel and extend beyond the edge of the joint to provide development to connect the two panels.

The joints between post-tensioned panels are 1-3/4 inch wide grouted keyways similar to the joints between prestressed slab and box beams.

Leveling bolts are used to place panels to the appropriate elevation before the shear openings and joints are filled with concrete or grout. The gap between the top of the beam and the bottom of the panel is filled with UHPC concrete and is contained using backer rods, foam sealant or forming brackets as detailed in the Standard Details.

Details at abutment connections are provided assuming the end deck panel will be made integral with the end diaphragm at the abutment.

Reinforcement and anchor bolts for railing will be precast into the panels as detailed in the standard details.

Precast deck panels are a new development in bridge design and construction and there are no past projects in Oregon where this concept has been incorporated into a completed project. Therefore, improvements are expected and any complications experienced during construction should be related to the Bridge Standards Manager so that changes can be incorporated prior to the development of final Standard Drawings for the precast panels.

If any changes are needed to be made to the Standard Details on a project specific basis, submit the proposed changes to the Bridge Standards Manager in the form of a Design Deviation so that comments can be provided and documentation for possible improvements to the Standard Details can be processed.

1.9.2 Deck Screeding

General

Consider deck constructability issues when specifying deck screeding requirements.

If the deck width or skewed dimension causes the length of the screed equipment to be excessive (more than 100 feet), the deck may need to be placed in stages with or without a closure pour. If staging is shown on the plans, a longitudinal joint should be along a longitudinal beam line and should not fall in a wheel line. The beam layout should take this into consideration.

Also on skewed decks, a sharp vertical curve on the structure may cause problems with screeding on the skew. It may be necessary to perform some unique sequencing, such as preloading the deck with plastic concrete far enough ahead of the screed machine to preload the beams to get unison deflections and allow the screed to run normal to the beams.

Consider whether the finishing machine can follow the actual slope of the roadway in one placement. Deck screeds can accommodate a crown section in one placement, full width, if the superelevation remains constant. If the superelevation rates vary, the deck will normally need to be placed in separate placements. As noted previously, it is best to have a longitudinal joint along a longitudinal beam and beam layout should take this into consideration.

If a structure has different skews at adjacent bents, the skew of the screed equipment should be based on the average of the bent skews.

If a structure is curved with radial bents, the screed equipment and deck placement should remain normal to the roadway centerline. In this case, the screed equipment must be equipped with variable speed capacity at both ends.

Designers should perform enough geometric calculations to determine the best method or direction of deck screeding. When necessary, place the required sequencing and/or direction of screeding, skewed or normal, on the detail plans.

Beams not Supported by Falsework

The main concern of this type of placement is that the beams deflect equally in unison, so deck thickness and clearances end up as shown on the plans. To deflect equally the beams need to be loaded equally. If the structure has a skew, the screed should run on a skew, parallel to the bents.

Add a note to the plans specifying that the screed equipment shall run parallel to the bents.

Falsework Supported Beams

There is less concern regarding how the concrete is placed for falsework supported beams. There will still be a small amount of falsework crush due to the added dead load of the deck. Ideally it would be best to place and screed skewed decks on the skew, but practically it is not required.

1.9.3 Deck Construction Joints

The number of deck construction joints should be minimized to avoid potential leaks through the deck. However, it is often necessary to provide deck construction joints to avoid shrinkage or deflection cracking.

Normally for non-continuous spans, deck concrete placements should be full length or stopped at a transverse beam. The construction joint surface is normally vertical and should be roughened, according to *SP 00540.43(a)*, between placements.

For continuous spans or for emergency situations, provide a shear key with a roughened surface between placements. Typical key details should be shown on the plans as detailed below.

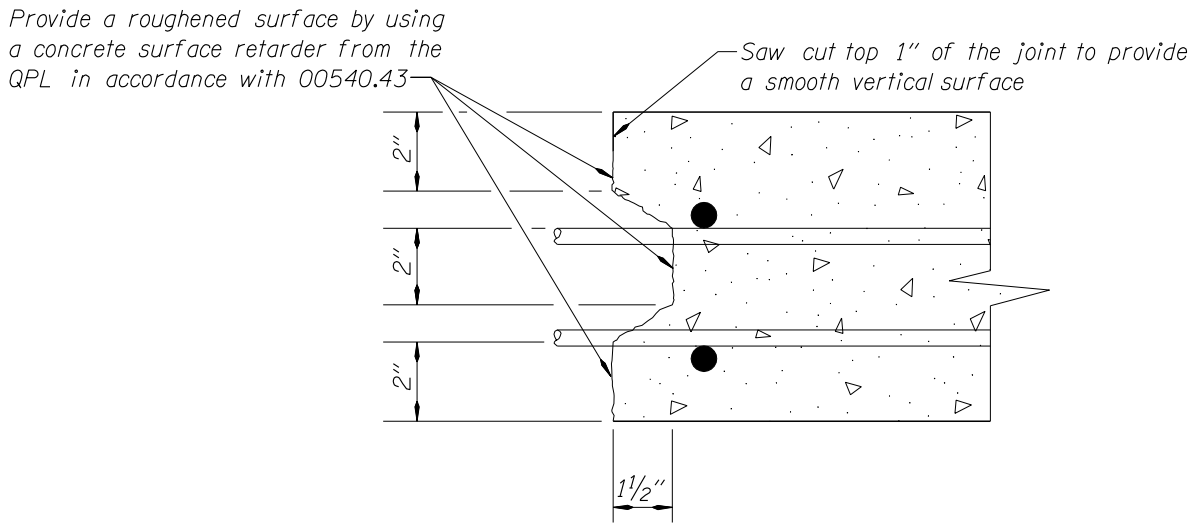

Figure 1.9.3

1.9.4 Deck Overlays

1.9.4.1 Introduction

The purpose of an overlay on a bridge deck can be to:

- restore the structural integrity of the deck.
- improve or restore ride ability.
- improve skid resistance.
- improve deck drainage.
- improve deck cross-section.
- seal deck cracking.

There are 5 overlay types offered for use on bridge decks:

- Silica Fume Concrete (SFC)
- Latex Modified Concrete (LMC)
- Multi-Layer Polymer Concrete Overlay (MPCO)
- Premixed Polymer Concrete (PPC)
- Asphalt Concrete Wearing Surface (ACWS)

SFC is the most common overlay type. SFC is often referred to as Microsilica Concrete (MC).

LMC is also available, but has not been used in Oregon for many years.

SFC and LMC, both Portland Cement Concrete (PCC) based, are considered "structural" concrete overlays. The term "structural" is used to describe an overlay that is rigid enough and thick enough to increase the stiffness of the deck and decrease live load deflections. This increased stiffness should not be included in design because it is dependent upon the bond between the overlay and the deck. Both are typically placed on a bridge deck with a minimum thickness of 1-1/2".

Polymer Concrete (PC) is used in special situations where structural integrity is not an issue. PPC is used in similar situations as MPCO, but with slightly improved durability and skid resistance.

MPCO/PPC overlays are not considered to be "structural" overlays because they do not add to the deck stiffness.

ACWS may be used with membrane waterproofing. Use ACWS only on bridges with existing ACWS.

ACWS is not considered to be a "structural" overlay because it does not add to the deck stiffness. ACWS is typically placed on a bridge deck with a minimum thickness of 3".

1.9.4.2 Latex Modified and Silica Fume Concrete

SFC is a concrete mix with a silica fume modifier. Batching is normally done at a batch plant. SFC placement is accomplished with more conventional construction methods than a LMC overlay. Review Special Provisions Section *00559* for SFC and LMC requirements and restrictions. For the remainder of this Section, references to a "SC" overlay (structural concrete overlay) apply to both LMC and SFC overlays.

LMC is a concrete mix with a latex emulsion modifier. The latex emulsion has a milky color and texture and is added during batching. Batching is done in mobile mixers at the job site.

LMC overlay technology has been used since 1958, and the design life of the material can be predicted from historical data.

The use of LMC offers many construction advantages. Since the material is batched in a mobile mixer, the pour schedule does not depend upon the concrete plant schedule. Also, the pour is not influenced by the projects distance from the concrete plant. LMC was a common type of structural overlay in the past. Equipment may be available, but verify with local contractors before specifying LMC.

LMC does have some disadvantages, however. Placement of the LMC overlay is very labor intensive, increasing construction costs. The rate of construction for an LMC overlay is about 6400 sf to 7400 sf per 8-hour work shift. LMC is also very sensitive to atmospheric conditions which often control not only the pour schedule but the contract time as well. Review *SP 00559* for placing limitations. Surface preparation and curing are the most critical factors to achieving a good quality end product and are often the most neglected.

1.9.4.3 Polymer Concrete Overlays – General

Polymer is a very general term used to classify a wide variety of compounds that chemically combine in a reaction (polymerization).

Polymer binder resins are formulated in hundreds of different combinations, depending upon the properties desired. The most common categories of polymer binder resins in use as bridge deck overlays or patching material include:

- Epoxy
- Polyester

PC is a composite material in which coarse aggregate is bound together with the polymer binder resin.

PC can be placed as an overlay in generally two different ways – as a MPCO (also known as broom and seed) or as PPC, which is screed finished to grade.

The most common polymer used for MPCOs is epoxy.

The most common polymer used for PPCs is polyester.

PC overlays have many construction advantages:

- PC overlay flexibility reduces the potential for cracking due to thermal or design load movement.
- PC overlays are very light as compared to SC overlays. This reduction in dead load can be significant on load posted bridges or movable bridges.
- PC overlay construction time is much less compared to SC overlay applications. The short construction time provides a great advantage in time critical urban areas.
- PC overlay bond strength is typically double that of an SC overlay.

PC overlays also have some construction disadvantages:

- Atmospheric conditions: The prepared deck surface must be dry prior to placement. This provision could influence construction schedules. PC overlays should not be scheduled for winter applications and may be challenging in early spring and late fall applications. Review manufacturer's recommendations for placement limitations.

1.9.4.3.1 Multi-layer Polymer Concrete Overlays

MPCO's are a composite material formed by combining polymer binder resin and coarse aggregates.

MPCO's are constructed using any of the commonly available polymer resins. Each resin has its own advantages and disadvantages and should be used in accordance with manufacturer's recommendations.

MPCO's have a significantly lower modulus compared to PCC and therefore cannot be considered a "structural" overlay. MPCO's have been used on the interstate and appear to be performing well. MPCO's are typically placed to a nominal 3/8" thickness.

MPCO's applications don't require specialized equipment and are well suited for maintenance crews and smaller contractors. There have, however, been advances in application methods which have increased application efficiency vs. traditional manual application methods.

MPCO aggregates have a tendency to polish in the wheel lines, potentially reducing skid resistance as compared to other overlay types. Care should be exercised in selecting locations for MPCO's.

A typical MPCO is constructed by first removing all dirt, debris and laitance on the deck surface. This is best accomplished with the use of a shot blast system. Since the deck surface must be clean and dry prior to the application of the MPCO, the industry recommends the use of the shot blasting method. Shot blasting leaves the surface dry and vacuumed.

A layer of polymer is next applied to the prepared deck using a squeegee, broom, spray bar or other methods at a rate specified by the manufacturer. The aggregate is then broadcast, at a specified rate, over the surface and tamped or rolled into place. The excess aggregate is swept off the surface. A second layer, using the same process, is applied according to manufacturer's directions. This process is repeated until the 3/8" nominal thickness has been achieved.

Application rates can be estimated from between 2000-4000 square feet/hr.

The finished MPCO surface is not tined or screeded.

Refer to either the Conditional Products List or the *Qualified Products List* for MPCO products that are being evaluated for approval or have been approved for use. MPCOs and MPCO Aggregates are listed separately on the QPL. The MPCO binder manufacture is required to select the appropriate MPCO Aggregate from the QPL. *SP 00556* covers the use of MPCOs.

1.9.4.3.2 Premixed Polymer Concrete Overlays

PPC is a composite material formed by combining polymer binder resin and coarse aggregates in a mobile mixer, then applied to the deck and screed finished to grade.

PPC has a significantly lower modulus compared to PCC and therefore cannot be considered a “structural” overlay.

PPC overlays have been used on the interstate and appear to be performing well. Preliminary numbers indicate a slight advantage over MPCO’s in skid resistance.

PPC overlays are typically placed to a nominal 3/4” thickness and are more appropriate for minor grade improvements than MPCO’s, due to the grade controls of the screed finish machine. Due to the increased material thickness, PPC overlays are more expensive than MPCO’s

PPC is rapid setting and should be placed with a screed finish machine whenever practical. There are circumstances where a screed cannot be used, such as along the gutter lines which will require manual finishing.

Application rates can be estimated at a maximum of 5000 square feet/hr.

A typical PPC is constructed by first removing all dirt, debris and laitance on the deck surface. This can be accomplished with the use of a shot blast system. Since the deck surface must be clean and dry prior to the application of the PPC mixture, the industry recommends the use of the shot blasting method over the others. Shot blasting leaves the surface dry and vacuumed.

A layer of primer is next applied to the prepared deck surface using a squeegee or brooms. Next the polymer resin binder is mixed with the other components into a premixed condition. The premixed material is then placed onto the primed surface and finished to grade with specialized equipment designed for PPC applications. Silica sand is broadcast in areas of high resin content to maintain skid resistance.

The final product looks similar to PCC but with longitudinal tining.

PPC is currently not listed on the QPL and should be specified accordingly. Special Provision *00557* covers the use of PPC.

1.9.4.4 Inspection Report Review

Upon receiving a project assignment, review the latest bridge inspection report, noting the ratings for the deck, superstructure, bridge rails, deck joints and deck drains. A site visit may also be needed to gather additional information. Corings of the deck should be taken and tested for chloride levels and compressive strength.

1.9.4.5 Warrants for Overlays

Use the following overlay criteria and engineering judgment to determine whether an overlay is warranted.

- Bridge deck overlays are **not** recommended if any of the following conditions are met:
    - The deck condition is rated as a 7 or greater (category 3) in Item 58 of the bridge inspection report. The deck is still in good condition.
    - Delaminated, patched or cracked areas are less than 1 percent of the deck area. The deck is still in good condition.
    - The deck condition is rated as a 4 or less (category 1) in item 58 of the bridge inspection report and any additional investigation confirms that the deck deterioration has become too severe to repair.
    - Delaminated, patched or cracked areas are greater than 15 percent of the deck area and any additional investigation confirms that the deck deterioration has become too severe to repair.
    - Corrosion has deteriorated the deck to an extreme level or the chloride content exceeds 0.075 percent by mass of sample at the surface or 0.020 percent by mass of sample at the depth of rebar. See "Corrosion Considerations" below.
- Bridge deck overlays **are** recommended if any of the following conditions are met:
    - The deck condition is rated as a 5 or 6 (category 2). See item 58 of the bridge inspection report.
    - The deck condition is rated as a 4 or less (category 1) in item 58 of the bridge inspection report and thorough investigation shows that the deck deterioration has not become too severe to repair.
    - Delaminated, patched or cracked areas are greater than 15 percent of the deck area and thorough investigation shows that the deck deterioration has not become too severe to repair.
    - Delaminated, patched or cracked areas are greater than 5 percent but less than 15 percent of the deck area.
    - Delaminated, patched or cracked areas are greater than 1 percent but less than 5 percent of the deck area and the average daily traffic (ADT) is at least 3000.
    - Delaminated, patched or cracked areas are greater than 1 percent but less than 5 percent of the deck area and the structure carries interstate highway traffic.
    - Corrosion has not deteriorated the deck to an extreme level or the chloride content is less than 0.075 percent by mass of sample at the surface and 0.020 percent by mass of sample at the depth of rebar. See "Corrosion Considerations" below.

“Thorough investigation” means a delamination survey of the entire deck and chloride profiles taken from areas of highest exposure to drainage, and may include concrete cores. These results are used to determine the remaining concrete deck integrity before determining the appropriate deck treatment or if deck replacement is warranted.

1.9.4.6 Corrosion Considerations

Determine whether the structure is in a "marine environment". A marine environment is defined as:

- a location in direct contact with ocean water, salt water in a bay, or salt water in a river or stream at high tide.
- a location within 1/2 mile of the ocean or salt water bay where there are no barriers such as hills and forests that prevent storm winds from carrying salt spray generated by breaking waves.
- a location crossing salt water in a river or stream where there are no barriers such as hills and forests that prevent storm winds from generating breaking waves.

If the structure is in a marine environment, deck rebar corrosion is visible, or there is other reason to suspect the structure may be occasionally salted during winter months, discuss the proposed overlay project with the Corrosion Engineer in the Preservation Engineering Unit. Replacement of an existing deck may need to be considered depending upon the extent of chloride content and rebar corrosion. If the maximum acceptable chloride level in the deck has been exceeded, deterioration of the deck rebar will continue regardless of the presence of a new overlay.

<u>ACWS with membrane waterproofing</u>

If it is determined that an ACWS is the appropriate overlay solution, place membrane waterproofing on the concrete surface prior to placement of the ACWS. FHWA requires deck surface protection from top down chloride intrusion. Historically, this protection has taken the form of membrane waterproofing.

1.9.4.7 Design and Construction Considerations

After determining whether a bridge deck overlay is warranted, consider whether a SC overlay, a PC overlay or an ACWS will be used. Typically, one type will be better suited for the project than the other. Some factors to consider are:

- Short construction time windows (typically in urban areas) favor a PC overlay or an ACWS over a SC overlay due to speed of placement and cure time.
- Dead weight critical structures favor a PC overlay over a SC overlay or an ACWS because of their thin, lightweight nature.
- Deck requiring extensive buildup due to grade corrections or wheel rutting favor a SC overlay or an ACWS over a PC overlay due to the difficulty in building up a PC overlay.
- The construction budget. If the initial cost is a major consideration, ACWS is the least expensive. A SC overlay is about 4 times as expensive as the ACWS. A PC overlay is about 4.5 times as expensive as the ACWS. These values are general since the cost of the various overlays will vary with the location of the project. If the long-term life cycle cost is considered, a SC overlay may be the most economical.
- Length of structure. If an overlay project contains a short structure (less than 100 feet long) within the limits of new asphalt concrete pavement, it is more economical to place ACWS with membrane waterproofing on the bridge deck. This assumes that other design considerations have been satisfied.
- Region/Project Manager's experience. During the TS&L design phase, check with Region to see if they have a preference between the different types of overlays.
- SC and ACWS overlays need elastomeric concrete nosings or armored corners at the bridge ends and joints. It may be possible to place a PC overlay and not do any work to the joints.

Check the structure for the possibility of a bridge rail and/or bridge rail transition retrofit or replacement, deck joint repair or replacement, the addition of reinforced concrete end panels, the addition of protective fencing, the need for scour protection, seismic retrofit and bearing repair.

The following chart provides some guidance for selecting an overlay type based on design criteria.

DESIGN CRITERIA	ACWS	MPCO	PPC	SC (SFC, LMC)
Economy - Initial Cost	X			
- Long Term Cost				X
Construction Time - Fastest	X	X	X	
Grade Correction or Buildup Required	X		X	X
Dead Load Limitations		X	X	
Deck Sealer for Corrosion Protection		X	X	X
Proven Longevity				X
Contractor Familiarity	X			X
Low Traffic Volumes	X	X		
Deck Crack Sealer		X		

During the overlay selection process, review the structure's "As Constructed" plans, paying special attention to the following items:

- Effect of Additional Dead Load - Typically the dead load from a 1-1/2 inch concrete overlay has little effect on the capacity or operation of the structure. Exceptions to this are load posted bridges or movable bridges, where a SC overlay's dead load may have a significant impact. A PC overlay may be required.

- Existing Bridge Rail – Review the existing bridge rail for functional adequacy and replace if unacceptable (see 1.13). Review rail geometry, roadway geometry, ADT and rail accident history in order to determine whether the rail should be replaced. ADT information can be found in the Traffic Volume Tables. The accident history can be found in the Maintenance file for the structure or through the Traffic Section. The dimension from the top of the rail to the overlay finish grade should be checked to make sure that the minimum rail height is still met.

- Deck Joints - Deck joints should be cleaned and repaired (if necessary) prior to placing the overlay. Review the Bridge Inspection Report or field notes for information to determine if any deck joint work is needed. Additionally a field trip may be necessary in order to determine the best type of joint repair or replacement. See Standard Joint Drawings for typical deck joint reconstruction details. See Standard Specifications and *SP 00585* for expansion joints.

- Elastomeric concrete nosing is recommended for SC overlays, because of the high incidence of debonding at expansion joints or at bridge ends. See special provision 00584 for specifications developed for concrete nosing.

- Deck Drains - Existing deck drains should be noted on the overlay plan view. Generally, deck drain grates should be raised to match the new deck surface. For a PC overlay, the existing deck drain taper is adequate.

- Bridge End Panels - The need for bridge end panels can be confirmed by reviewing the current Bridge Inspection Report and the Maintenance file records. A field trip may be necessary to determine whether or not adding end panels to the structure is the best choice to minimize pavement cracks and/or settlement at the bridge ends.

  Bridges constructed after 1960 generally have paving ledges at the bridge ends, even though end panels were not installed at the time of construction. For older bridges, without paving ledges, or

for bridges with paving ledges that are too small, new corbels will need to be detailed to provide support for the proposed bridge end panels.

Traffic restrictions may require staging of the end panels or the use of Type III cement (high-early strength concrete) to accelerate construction times.

Check for the presence of an existing overlay or wearing surface. If one is present, note what material type it is. Also, check for the presence of an existing waterproof membrane. This information is used in estimating unit costs for Deck Preparation.

There is currently no statewide priority list for protective fencing. However, the 1993 law (ORS 366.462) which required all freeway overpasses to have protective screening is still in effect. Therefore, if a structure to be overlayed crosses over a roadway and does not have existing protective screening, discuss with Region staff whether or not screening should be included with the overlay project.

Variable SC Overlay Depths:

On SC overlay projects, where overlay depths are expected to be greater than a nominal 1-1/2 inch, use the following guidelines:

- For a depth up to 4 inches: use a full depth SC overlay.
- For a depth of 5 inches to 6 inches: use either a full depth SC overlay and add temperature reinforcing steel or place Class HPC 4000-1 concrete with temperature reinforcing steel up to the lower limit of Class 1 deck preparation. Then use a SC overlay up to finish grade.
- For a depth greater than 6": place Class HPC 4000-1 concrete with temperature reinforcing steel up to the lower limit of Class 1 deck preparation, then use a SC overlay up to finish grade.

1.9.4.8 Construction Scheduling

LMC requires a 4 day cure time. SFC requires a 7 day cure time. If traffic must be returned to the newly poured overlay before the cure time is complete, either the specification of Type III cement (high-early strength cement) or a Polymer Concrete overlay or an ACWS may need to be considered. Type III cement typically reduces the traffic restoration time from 96 hours to 24 hours. LMC with Type III cement does require a different mix design and may have a greater potential for cracking. Do not use it unless necessary for traffic considerations.

1.9.4.9 TP&DT / Stage Construction

Temporary protection and direction of traffic (TP&DT) requirements are important design considerations and could control project cost, project scheduling and even the type of overlay. Urban projects or narrow roadway width structures may require very short overlay cure times that could eliminate the use of a SC overlay entirely. Discuss traffic control issues early in the project with both Region and the Traffic Control Designer.

When stage construction is proposed, arrange the stage construction widths so that the overlay can be constructed in widths between 6 feet and 30 feet which are comfortable widths for SC overlay finishing machines and placement of PC overlays and ACWS. Avoid placing longitudinal construction joints in the wheel paths.

1.9.4.10 Quantity Estimates

A typical SC overlay for a bridge deck consists of the following structure bid items:

- Class 2 or 3 deck preparation (per sy)- if needed
- Furnish concrete overlay (per cy)
- Construct SC Resurfacing (per sy)

Class 1 Deck Preparation - Requires deck concrete removal to a normal depth of 1/8" according to ASTM E 165. This is called the volumetric "sand patch" test. Payment includes removal of the existing ACWS. Unit costs typically include one pass for asphalt removal. If the structure's ACWS is too thick to be removed in one pass (i.e. greater than 2 inches), increase the unit cost for the additional passes required. Core samples may need to be taken to determine the ACWS thickness. Indicate in the Special Provisions whether an existing waterproof membrane is present. Waterproof membrane is more difficult to remove and increases the unit cost of Class 1 Deck Preparation. If the existing wearing surface or overlay on top of the deck is not asphalt, but some other material such as SC or PC, indicate so in the Special Provisions for the project and adjust the unit cost up or down accordingly.

Calculate deck preparation area dimensions from gutter to gutter and end joint to end joint. No measurement of Class 1 preparation is require since it is paid under Construct SC Resurfacing.

Micro-cracking of the deck surface due to existing wearing surface or overlay removal with heavy impact machines (such as a Roto-mill) is believed to cause overlay delamination problems. Currently, the Roto-mill is only allowed to remove flexible material such as asphalt, if the thickness is 1" or greater. Hydro-demolition or Diamond grinding is required to remove both rigid materials such as SC or Portland cement concrete and stress transferring materials such as a thin PC overlay.

Furnish Concrete Overlay – Calculate this quantity from the Class I deck preparation area and a depth of 1/2 inch greater than the specified minimum depth. This increase accounts for field quantity overruns due to minor grade corrections and irregular Class 1 deck preparation. If the Class 2 deck preparation has been identified, add that quantity into the "Furnish Concrete Overlay" total.

Construct SC Resurfacing - This quantity is typically the same as the Class 1 deck preparation quantity and includes Class 1 deck preparation.

A typical PC overlay for a bridge deck consists of the following structure bid items or bid items similar to these. Check with the specifications writer for the most current item names and units:

- Deck Preparation (per sy)
- Furnish PC concrete overlay (per cy)
- Construct PC concrete overlay (per sy)

Deck Preparation - PC overlays do not require Class 1 deck preparation (as defined for a SC overlay), but do require an asphalt-free deck prior to cleaning and PC construction. An asphalt-free deck can be achieved through methods prescribed in the special provisions. Deck cleaning will typically be done either by high pressure water blasting, sand blasting or shot blasting. Full compensation for providing an asphalt-free deck and deck cleaning is paid for under this bid item.

Furnish PC concrete overlay – Calculate this quantity from deck area (gutter to gutter and end joint to end joint) and a depth of 1/8 inch greater than the specified nominal depth.

Construct PC concrete overlay – Calculate this quantity from the deck area (gutter to gutter and end joint to end joint).

A typical ACWS for a bridge deck consists of the following bid items:

- Membrane waterproofing (per sy if needed)
- Asphalt concrete mixture (per ton) - Roadway Engineering Section's responsibility.

The Membrane Waterproofing bid item includes full compensation for the removal of any existing asphalt concrete, applying the membrane waterproofing system and the asphalt tack coat. If there is an existing membrane waterproofing system on the bridge deck, note this in the project's Special Provisions and pay for removal under this bid item. Bridge Section's design cost data for this bid item is typically for a new bridge deck without any existing material removal required. Increase the recommended unit cost by 10-15 percent to reflect the increase for material removal.

The asphalt concrete bid item is typically the responsibility of the Roadway Designer. Communicate with the Roadway Designer to make sure all the bid items are covered.

In addition to these bid items, the following items may also be required:

- For SC overlays - "Class 2 deck preparation" (per sy)
- For SC overlays - "Class 3 deck preparation" (see below)
- For PC overlays and ACWS - "Deck repair" (per sy)
- Deck joints (each or linear feet)
- Deck drain construction (each)
- Bridge rail retrofit or replacement (linear feet)
- Reinforced concrete end panels (per sy)

Class 2 Deck Preparation (SC overlays only) - Class 2 Deck Preparation is usually a result of deck delamination with the bottom half of the deck still sound. It requires the removal of the deck concrete from the limits of Class 1 Deck Preparation down to a maximum of one half of the deck slab thickness. The existing rebar is to be cleaned and retained or replaced if damaged. Class 4000-3/4 concrete is poured up to the lower limit of Class 1 Deck Preparation. Consult with field personnel when estimating a final quantity. For a preliminary estimate, 20 percent of the deck area can be used as a rough quantity estimate if some Class 2 Deck Preparation is anticipated.

A deck survey is recommended to confirm the estimated quantity of both Class 2 and Class 3 Deck Preparation. Chain drag, infrared scan, impact echo or ground penetrating radar (GPR) is acceptable methods of performing a deck survey.

Class 3 Deck Preparation (SC overlays only) - Class 3 Deck Preparation is usually required due to severe deep delaminations, a severely cracked deck in all directions, a badly spalled bottom deck or poor aggregates. It requires full deck removal and replacement with Class 4000-3/4 concrete up to the lower limit of Class 1 Deck Preparation. In most cases, the quantity of Class 3 Deck Preparation is very small. If so, no bid item is necessary. The work will normally be performed on an extra work basis. If the quantity is significant (say, 500 sf), use an anticipated item to ensure there is adequate authorization in the construction budget. In cases where a deck survey provides a confident estimate of the quantity, a separate bid item can be used. Even if only a portion of the Class 3 Deck Preparation quantity is known with confidence, it is

acceptable to use a bid item for the known quantity. Additional Class 3 Deck Preparation beyond the known quantity can then be paid for as extra work.

In summary, there are generally three options:

If < 500 sf of Class 3 anticipated	No bid item & no anticipated item
If > 500 sf of Class 3 anticipated	Use an anticipated item
If > 500 sf of Class 3 w/ a confident estimate	Use a bid item

Field research should indicate a high probability of Class III Deck Preparation before including an anticipated item. In any case, verify how Class 3 is handled with the construction PM.

Deck Repair (PC overlays and ACWS only) - This bid item is similar to the Class 2 Deck Preparation bid item for an LMC overlay. The Deck Repair bid item includes removal of all unsound concrete to the maximum limits of one half of the deck thickness as directed by the Engineer, disposing of the material removed, cleaning and retaining existing rebar (including existing epoxy coating on rebar) and replacing the void with an approved Portland cement concrete patching material. Consult the Region Bridge Inspector, Bridge Maintenance or the *Qualified Products List* for recommendations on patching products.

If the existing deck has an overlay or wearing surface, the need for partial depth deck removal may not be apparent. If there isn't an indication of deck removal required (for a preliminary estimate) use 10 percent of the deck area as requiring partial depth removal (down to one half the deck slab thickness). During the Final Design Stage, contact the Region Bridge Inspector or Bridge Maintenance for guidance on the actual extent of deck repair anticipated.

If removal of unsound concrete exceeds the limits of the Deck Repair bid item, pay for additional work on an extra-work basis. If the Designer suspects extra work will be necessary, make an estimate of the cost and include it as an anticipated item.

All loose or deteriorated concrete must be repaired to ensure a well bonded and crack-free overlay. If the concrete deck has extensive cracking in which water intrusion is a concern, place a polymer crack sealer compatible with the PC overlay prior to the PC overlay. Seal cracks that are 1/16 inch or wider. If the cracks are "working" or active with live load movement, sealer will not solve the problem and a more involved analysis will be needed. Include compensation for crack sealing under the Deck Repair bid item.

1.9.4.11 Preparing Plans and Specifications

Typical bridge deck overlay plans include a plan view, location map and general notes if needed and miscellaneous details as required. The plan view should include the following:

- Plan view of the structure with the bridge railing.
- Bent numbers, stationing and skews (if any).
- Span lengths.
- Roadway widths.
- Detail reference notes indicating work to be done.

Use detail reference notes to indicate the overlay construction work required and other work, such as:

- construction of end panels.
- construction of paving ledges.
- deck drain locations raising.
- expansion joint work.
- bridge rail retrofit or replacement.
- bridge rail transition retrofit or replacement.
- protective fencing.
- stage construction (coordinate with the Traffic Control Plans Unit).

Miscellaneous details may need to be added to clarify the work to be done in specific areas. These details can be placed on the plan sheet or a second sheet if more space is required.

If stage construction is used, temporary concrete barrier may be required on the bridge deck. Check with the Traffic Control Designer for recommendations. See *BDDM 1.13.1.4* for temporary barrier detailing and anchorage requirements.

The "Designer's Notes to Specifications" should indicate under which bid item the miscellaneous details are to be paid for. Expansion joints and deck drain work may be paid for under the bid item for overlay construction if the cost is minor. End panels, paving ledges, bridge railing and protective fencing will need separate bid items.

1.10 FOUNDATION CONSIDERATIONS

Outline:

1.10.1 Foundations, General

1.10.2 Lateral Earth Restraint

1.10.3 Underwater Construction

1.10.4 Foundation Modeling (Foundation Springs)

1.10.5 Foundation Design

1.10.1 Foundations, General

The Foundation designer will provide data and recommendations with respect to types of footings, footing elevations, nominal and factored resistances, types of piling, pile tip reinforcing, and drilled shaft tip elevations which are to be used at each bridge site. The Designer should be satisfied that the recommendations are adequate with respect to factored loads and economy. If there are questions in this matter, they should be discussed with the Foundations design engineer. Special factors in the type of construction selected may cause a reconsideration of the original recommendation. Some basic guidelines include:

- If the Foundation report is not available, the fact should be noted and the basis for the design of the footings should be indicated.
- Except for special cases, provide a minimum of 2 feet of cover over the top of spread footings.
- Make the top of footings within the right of way of the Union Pacific Railroad a minimum of 6 feet below the bottom of the low rail to allow for future underground utilities.

1.10.2 Lateral Earth Restraint

If passive earth pressures are used in design to resist seismic or other lateral loads, detail the plans to ensure assumed soil conditions exist after construction. Where possible, plans should specify placing footings against undisturbed material. The soil type may be such that it will not stand vertically after excavation. If soil is disturbed, *SP 00510.41* requires backfilling with compacted granular material. If there is any question concerning this, consult with the Foundation Designer. If the excavation will not stand vertically, add a reference note, "See Standard Specifications for Construction" to the "Structure Excavation Limits" detail shown on the plans. The Contractor will be allowed to excavate beyond the footing limits and backfill with compacted granular structure backfill (*SP 00510.46*). If footings, such as pile supported, etc., do not require the lateral soil resistance for stability, then do not call for pouring against undisturbed material.

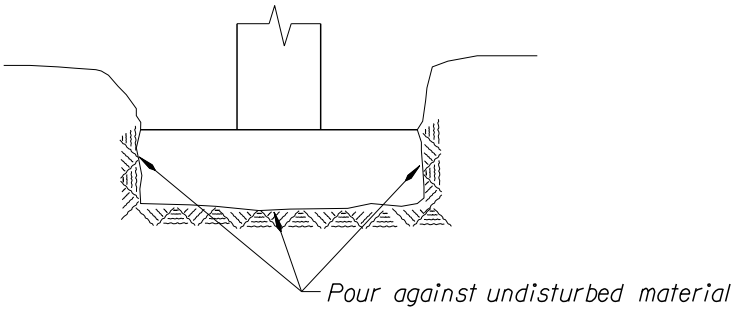

Figure 1.10.2A

1.10.3 Underwater Construction

1.10.3.1 Underwater Foundation Design Considerations

- Requirements for scour protection, potential scour depths and elevations, recommendations for riprap protection can be found in the Hydraulic Report.

- The seal size, which ultimately determines the cofferdam size should be large enough to accommodate the footing plus footing forms inside the cofferdam walers. A minimum of 2 feet on each side of the footing should be provided.

- Require the contractor to remove all underwater formwork.

- In streams where there is a potential for scour, riprap should be placed as soon as possible and before removal of the cofferdam.

- Scour calculations do not take into account debris loading. A pile of debris will cause a larger obstruction thereby increasing the scour depth.

- Streambeds are often "mobile" and the top few feet or so are moving downstream all the time. During extreme flood events the mobile streambed material cannot be counted on for protection.

- The depth component of the bearing resistance equation has the most significant contribution to the footing's ability to support the load.

- Riprap is not considered permanent protection against scour for seals.

- When placing a footing in a stream, the material around and over the footing has been reworked and doesn't have the in situ strength of the native streambed.

- Another factor that is not always taken into account during a scour calculation is that the stream may be degrading or have the possibility of degrading in the future.

1.10.3.2 Footing Embedment

On stream crossings and where horizontal forces are involved, the following sketch should appear on the plans if the foundation material is suitable.

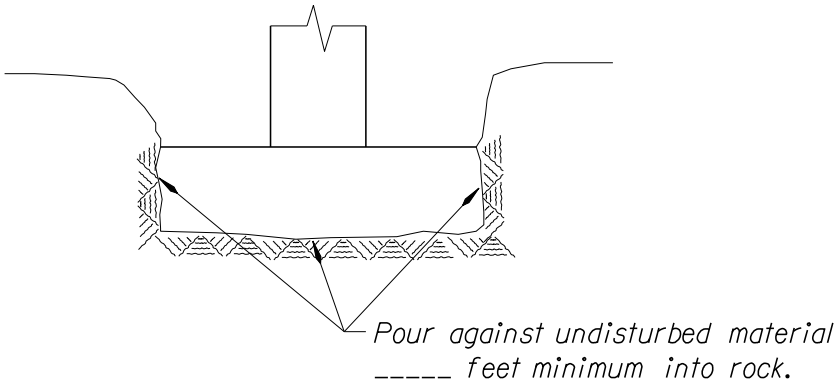

Figure 1.10.3.2A

The bottom of footings in streambeds shall be a minimum of 6 feet below the normal streambed, except in solid rock. If in solid rock, the top of the footing shall be flush with the rock line.

1.10.4 Foundation Modeling (Foundation Springs)

In foundation modeling it is common practice to first assume translational and rotational fixity of the foundation supports and perform a preliminary structural frame analysis. The resulting reactions are checked against the factored resistances. This procedure underestimates global deflections but establishes an upper bound for forces. This type of foundation modeling may be sufficient in certain loading conditions, such as thermal expansion, where deflections are not a controlling factor in design provided the forces are not excessive. However, under higher lateral loading conditions, such as moderate to severe seismic loading, more accurate deflections and forces are desirable. Excessively conservative design forces can be expensive to accommodate. In these cases, foundation springs are typically used in the structural frame analysis. The computer program GT-STRUDL allows the use of these springs. Foundation springs are typically equivalent linear springs representing the translational (horizontal), axial (vertical) and rotational load-deflection behavior of a nonlinear soil response. The use of foundation springs can significantly reduce the upper bound foundation reactions and more accurately models the entire soil-structure interaction system. Nominal geotechnical resistances are typically used with seismic loading conditions unless otherwise directed by the Foundation Designer. Factored resistances are typically used for all other load combinations. Factored resistance is the nominal resistance multiplied by the appropriate resistance factor.

1.10.4.1 General Modeling Techniques

There are three options for foundation modeling:

(Option 1) Fixed foundations

(Option 2) Fully coupled foundation spring model

(Option 3) Uncoupled translation and rotational springs

Option 1 fixes all foundation supports in the computer model. The resulting forces are simply compared to the resistances stated either in the Foundation Report or as determined in this section of the design manual. If the resulting forces exceed the resistances, foundation modeling using springs is recommended.

Option 2 allows stiffness coupling for both shear and moment and also cross-coupling (off diagonal). This option is not required for most problems. This option should be used for drilled shafts, trestle piles and for some pile foundations where the piles are connected to the substructure or superstructure such that a fixed condition exists. A massive footing with deeply embedded piles is an example. The method is applicable to all types of foundations.

Option 3 is the most commonly used method to represent footing and piling flexibility. It is a simplified version of the fully coupled spring model (Option 2) and is used in cases where there is no significant moment transfer between superstructure and foundation elements. This option is appropriate for most problems except as noted in Option 2 above. Use this option with vertical piling only. Battered piles result in larger lateral stiffness, which this option does not presently address.

1.10.4.2 General Procedures and Typical Values

The following guidelines are provided for Option 3 as general information, and are intended to be supplemented with engineering judgment. Methods are presented for developing foundation springs, including factored and nominal resistances, for the following foundation types:

- Abutments and wingwalls
- Spread footings
- Piles and pile caps

Foundation springs are typically nonlinear in form although some are represented in bilinear form. The curve typically consists of an initial (straight line) stiffness followed by a nonlinear relationship leading up to a nominal resistance. Various methods are used, depending on the type of spring, to develop the entire nonlinear load-deflection curve (spring).

The procedures described in this section, and typical values, come from the following sources:

- “Seismic Design of Highway Bridges”, Workshop Manual by Imbsen & Associates, Inc., prepared for the FHWA, October, 1989.
- “Design and Construction of Driven Pile Foundations”, FHWA Workshop Manual, Volume 1, December, 1996.
- Design Manual 7.2, “Foundations and Earth Structures”, Dept. of the Navy, May, 1982.
- “Foundation Analysis and Design”, (4th ed.) by Joseph E. Bowles.

- "Design Manual for the Foundation Stiffnesses Under Seismic Loading", prepared for Washington DOT by Geospectra, April, 1996.

- "Design Guidance: Geotechnical Earthquake Engineering For Highways", Volumes I & II; FHWA Report No. FHWA-SA-97-076-77, May, 1997.

- Pile capacity and stiffness work done by Bridge Engineering and Geotechnical Group personnel in 1996 and 1997.

Standard Penetration Test (SPT) numbers presented in the Design Manual ("Nc" values) refer to "N" values for granular soils corrected to an effective overburden pressure of 1 tsf. Uncorrected "Nc" values should be used for cohesive soils. The Foundation Designer should be consulted for representative values to use in these methods.

(1) <u>Abutments and Wingwalls</u>:

Use translational springs in both the longitudinal and transverse directions.

Translational Stiffness: The abutment translational stiffness should account for displacements resulting from expansion joints associated with seat abutments.

Soil Backfill: Initial backfill stiffness, K_i = 20 kips/in/ft. for both backwall and cap. Similar for wingwalls transversely but discount one wingwall and use 2/3 of the remaining one. The initial stiffness should be adjusted proportional to the backwall width and height according to the following equation:

Kabut = Ki x Wbw x (Hbw/5.5)
Where "Wbw" is the width of the backwall in feet and "Hbw" is the height of the backwall in feet.

Piles: Refer to "Pile Supported Footings and Abutments" (see BDDM 1.10.4.2(3) below). Generally assume dense granular fill. Use pile translational stiffnesses in tables below for loading conditions other than seismic. For seismic loading conditions, perform a COM624P or LPILE analysis. Consult with the Foundation Designer to verify COM624P or LPILE soil properties.

<u>Translational Capacities:</u>

Soil Backfill: The passive pressure resisting the movement at the abutment increases linearly with the displacement up to a maximum pressure of 5.0 ksf. The maximum passive pressure of 5.0 ksf is based on the ultimate static force developed in the full scale abutment testing conducted at UC Davis [Maroney, 1995]. The maximum passive force should be calculated using the following equation:

Pforce = Hbw x Wbw x 5.0ksf x (Hbw/5.5)

where:
H_{bw} = height of backwall and cap, feet.
W_{bw} = width of backwall, feet

Similar for wingwalls transversely except discount one wingwall and use 2/3 of the remaining one.

Piles: For seismic loading, use ultimate values derived from COM624P or

LPILE analysis by comparing the maximum yield moment of the pile to the maximum moment output from COM624P or LPILE. Take end slope and side slope effects into account. Generally assume dense granular fill representing granular wall backfill. This material should be present in the entire passive wedge area. Consult with the Foundation Designer to verify COM624P or LPILE soil properties. Use allowable pile capacities in tables below for loading conditions other than seismic.

Translational Load-Deflection Curve:

Use the initial stiffness up to the capacity limit. The curve form is:

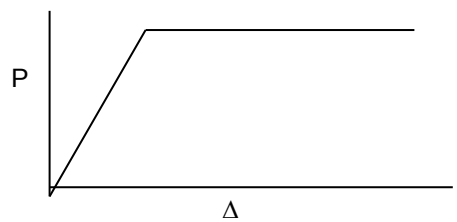

(2) Spread Footings: - Unless constructed on solid bedrock, use translational and rotational springs in both the longitudinal and transverse directions. In general, footings keyed into a rock mass that has an elastic (Young's) modulus typically greater than 14,000 ksf (Unconfined Compressive Strength = 1000 psi) can be considered "fixed" against both rotation and translation. Consult with the Foundation Designer to determine the compressibility of very soft or highly fractured bedrock materials.

Translational and Rotational stiffnesses:

Use the equivalent circular footing formulas on the following pages with information from Table A, to develop translational and rotational spring constants. Consult with the Foundation Designer for the appropriate soil values to use in *Table A*.

	SPT "Nc"*	**E (ksf)**	**Poisson's Ratio (*v*)**	**G (ksf)**
Granular				
V. Loose	4	300	.35	110
Loose	10	1000	.35	370
Medium	30	2000	.35	750
Dense	50	3000	.35	1100
Cohesive				
Soft	4	400	.50	150
Stiff	8	1000	.50	350
Very Stiff	16	1500	.50	500
Hard	32	2000	.50	650

TABLE A

* "Nc" is the average of Nc values over a depth of 2B below the footing, (B = footing width).

Stiffness Calculations for Spread Footings:

Spring constants for rectangular footings are obtained by modifying the solution for a circular footing bonded to the surface of an elastic half-space. The formula is as follows:

$$k = \alpha\beta K_0$$

where:
k = initial stiffness (spring constant)
α = foundation shape correction factor; (from graph)
β = embedment factor, (from graph)
K0 = stiffness coefficient for the equivalent circular footing (see formulas in Table B below)

The stiffness term, K_0 ,is calculated using the equations in *Table B* below:

Displacement Degree-of-Freedom	**K_0**
Vertical translation	4GR/(1-*v*)
Horizontal translation	8GR/(2-*v*)
Torsional rotation	$16GR^3/3$
Rocking rotation	$8GR^3/(3(1-v))$

TABLE B: Stiffness coefficient, K_o , for a circular footing at the ground surface

Note:
G = Shear Modulus (low strain range)
v = Poisson's ratio for elastic half-space material
R = Equivalent footing radius as determined from the following equations:

EQUIVALENT RADII, R, FOR RECTANGULAR FOOTING SPRING CONSTANTS:

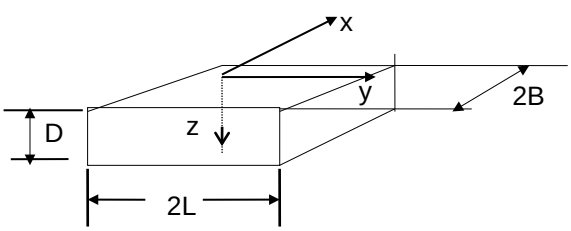

RECTANGULAR FOOTING

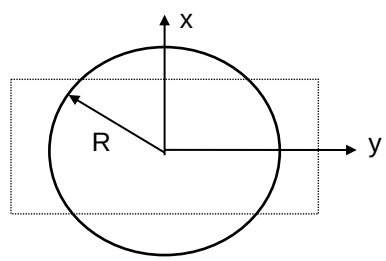

EQUIVALENT CIRCULAR FOOTING

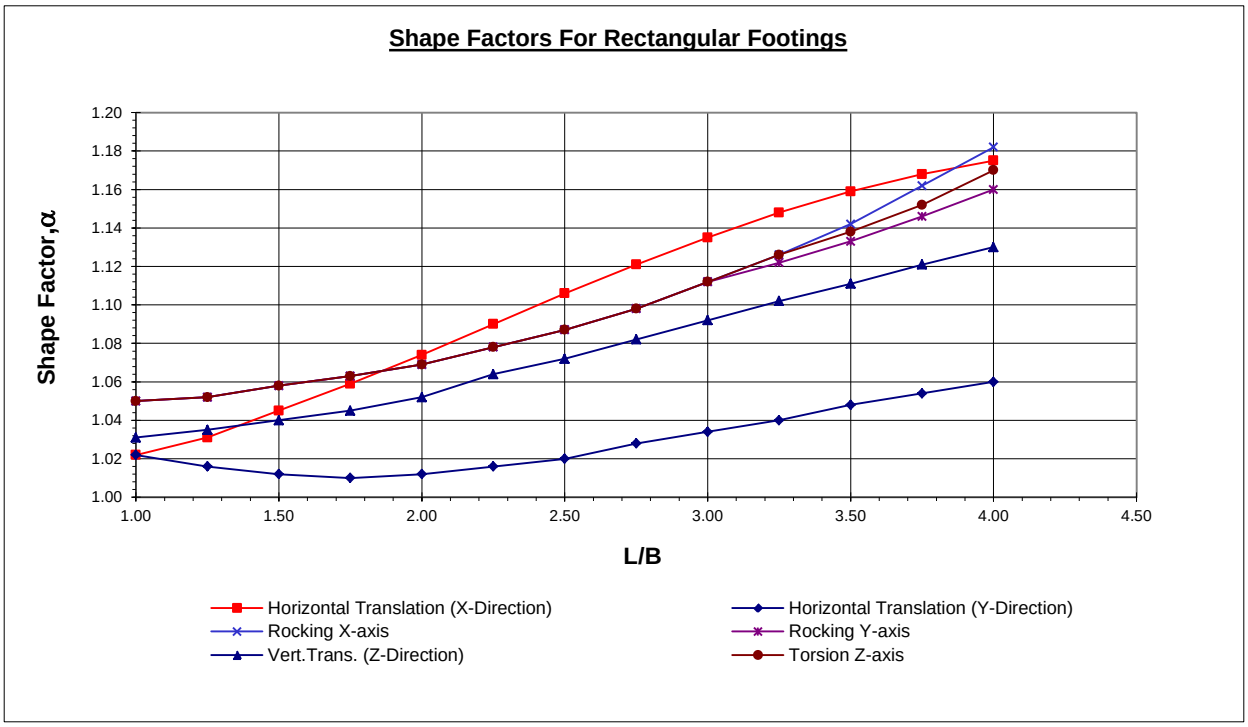
Shape Factors For Rectangular Footings
Shape Factor,α
1.20
1.18
1.16
1.14
1.12
1.10
1.08
1.06
1.04
1.02
1.00
1.00
1.50
2.00
2.50
3.00
3.50
4.00
4.50
L/B
Horizontal Translation (X-Direction)
Horizontal Translation (Y-Direction)
Rocking X-axis
Rocking Y-axis
Vert.Trans. (Z-Direction)
Torsion Z-axis

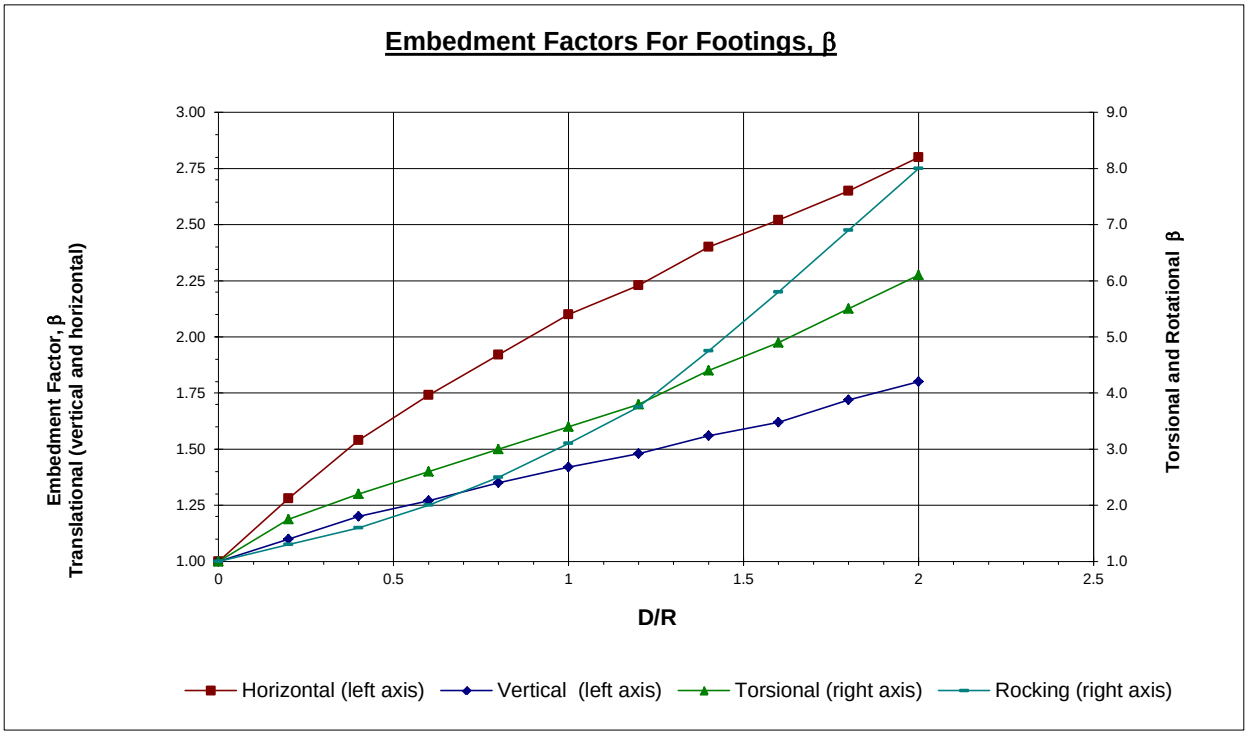
Embedment Factors For Footings, β
Embedment Factor, β
Translational (vertical and horizontal)
3.00
2.75
2.50
2.25
2.00
1.75
1.50
1.25
1.00
9.0
8.0
7.0
6.0
5.0
4.0
3.0
2.0
1.0
Torsional and Rotational β
0
0.5
1
1.5
2
2.5
D/R
Horizontal (left axis)
Vertical (left axis)
Torsional (right axis)
Rocking (right axis)

EQUIVALENT RADIUS:

TRANSLATIONAL: $$R = \sqrt{\frac{4BL}{\pi}}$$

ROTATIONAL: $$R = \left[\frac{(2B)(2L)^3}{3\pi}\right]^{1/4}$$; for x-axis rocking

$$R = \left[\frac{(2B)^3(2L)}{3\pi}\right]^{1/4}$$; for y-axis rocking

$$R = \left[\frac{4BL(4B^2 + 4L^2)}{6\pi}\right]^{1/4}$$; for z-axis torsion

Translational Capacities:

The use of the following values depends on the footing construction method (i.e. formed with backfill material or poured against undisturbed material). Only the passive resistance developed from the front face of the footing, combined with the shear resistance along the footing base, is considered. Column and footing side resistance is neglected. Consult with the Foundation Designer for recommended soil properties, groundwater levels and proper effective unit stress to use in the analysis. Scour effects should also be considered.

Use the values from *Table C* in the general formula:

Force Capacity = (Kp x effective unit stress x footing face area)
+ (Su x footing face area) + (μ x support reaction)
+ (Su x footing base area)

Use appropriate components depending upon soil type. Consult with the Foundation Designer for the appropriate soil values to use.

Note: Effective Unit Stress = (Buoyant Unit Weight x Depth to middle of footing)

	SPT "Nc"	**STATIC CAPACITY**			**Total Unit Wt. (k/ft^3)**
Granular		Kp	Su (ksf)	μ	
V. Loose	4	2.7	0	.34	0.090
Loose	10	3.0	0	.40	0.100
Medium	30	3.7	0	.47	0.115
Dense	50	4.6	0	.56	0.120
Cohesive					
Soft	4	-	0.5	-	N.A.
Stiff	8	-	1.0	-	N.A.
Very Stiff	16	-	2.0	-	N.A.
Hard	32	-	4.0	-	N.A.

TABLE C

Deflection required to fully activate capacities (Δ_{max}):

Granular:

Loose	.06H
Dense	.02H

Cohesive:

Soft	.04H
Stiff	.02H

H = Soil surface to middle of footing depth

Specific applications may require the use of less than the full capacity due to deflection restrictions.

Rotational Capacities:

The rotational capacity is typically determined by comparing the total footing pressure, including the overturning moment, to the factored bearing resistance provided in the foundation report, unless otherwise directed by the Foundation Designer. The bearing resistance of footings with overturning moments and eccentricity are determined using "effective" footing dimensions.

Translational Load-Deflection Curve:

The following equation may be used in conjunction with the translational stiffnesses and capacities for developing a translational load-deflection curve for spread footings and pile caps.

$$P = \frac{\Delta}{\frac{1}{k_{max}} + \left[R_f \times \frac{\Delta}{P_{ult}} \right]}$$

where: P = Load at deflection Δ
P_{ult} = Ultimate passive force (neglect base shear for pile caps)
k_{max} = Initial stiffness
R_f = Ratio between the actual and the theoretical ultimate force. R_f can be determined by substituting Δ_{max} from the previous section for Δ and P_{ult} for P in the above equation and solving for R_f.
Δ = Translational deflection, inches

An example of the use of this equation is given below. This graph represents the form of the equation only.

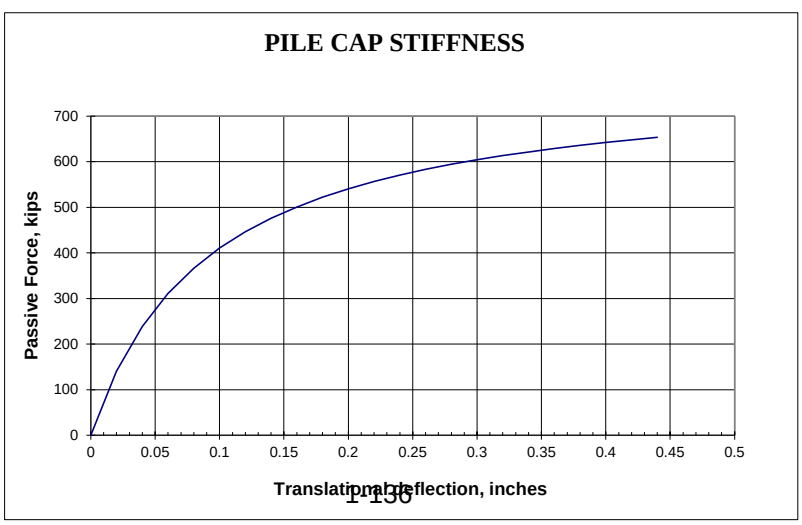

Rotational Load-Deflection Curve: Use the initial stiffness up to the capacity limit. The curve form is:

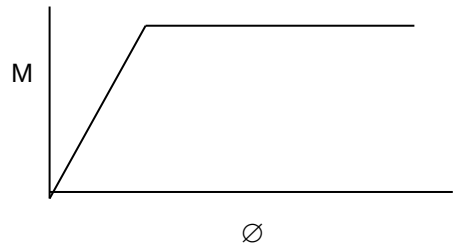

(3) <u>Pile Supported Footings</u>

Use translational and rotational springs for pile supported footings in both the longitudinal and transverse directions. This approach is recommended in cases where seismic loading is the controlling factor in the structural frame analysis. Springs may also be used to model pile supported footings in non-seismic conditions at the designer's discretion. Nominal resistances may be used for both non-seismic and seismic design conditions unless otherwise recommended by the Foundation Designer.

In cases where seismic loading is not the maximum group loading for the structure, the stiffnesses and nominal lateral resistances given in the following tables are acceptable for most design cases, provided the site conditions generally satisfy the assumptions made in developing these values. In general, for soils with "Nc" values less than 4, the pile translational stiffness should be evaluated using the COM624P or LPILE programs and the Foundation Designer should be consulted for further guidance.

The use of battered piles is generally discouraged due to the greatly increased stiffness contribution from the battered piles. This in turn can result in excessive battered forces and induce undesired or unrealistic uplift forces in adjacent piles. In lieu of battered piles, it is recommended to use vertical piles throughout the footing.

Refer to the seismic design example problem for further clarification.

Translational Stiffnesses:

Normally the translational stiffness should include the lateral pile stiffnesses (total pile group stiffness) plus the passive soil stiffness on one side of the footing. Typically, a single lateral pile-head stiffness is estimated from either the pile-top, load-deflection curve generated by LPILE or COM624P program output or from pile stiffness values given in the following tables. This single pile-head stiffness is then multiplied by the number of piles in the group and the resulting group stiffness value is then multiplied by a group reduction factor depending on pile spacing. Instead of using a group reduction factor, pile group effects may also be accounted for using p-y curve multipliers as described under "Pile Group Reduction Factors and p-y Multipliers". These multipliers are included in the LPILE program but not in the COM624P program.

Pile cap, or footing, stiffnesses should be developed using the methods described under "Spread Footings", except the soil stiffness contribution along the base of the pile cap should be neglected. This is accomplished by calculating the stiffness of the pile cap (footing) at the ground surface (D = 0) and subtracting this value from the stiffness calculated for the embedded pile cap footing. The resulting stiffness curve is then combined with the pile group stiffness curve as described in "Translational Load-Deflection Curve".

Seismic Controlled Loading Condition – Extreme Event Limit State

The pile-head translational stiffness curve is generated using the COM624P or LPILE program using soil input parameters supplied by the Foundation Designer. Pile head boundary conditions (fixed, free or fixed-translational) must be assigned by the designer. Refer to the FHWA publication "COM624P - Laterally Loaded Pile Analysis Program for the Microcomputer", Version 2.0, FHWA-SA-91-048 or the LPILE Plus computer program manuals. This method is shown in *Figure 1.10.4.2-(3)*.

Non-seismic Loading Conditions

For non-seismic loading conditions the following pile stiffnesses may be used provided the site conditions generally satisfy the assumptions given below.

Pile Translational Stiffnesses (k/in):

Axis - W=Weak S=Strong	SPT "Nc" *	HP 10x42		HP 12x53		HP 12x74		HP 14x89		HP 14x117	
Granular		W	S	W	S	W	S	W	S	W	S
V. Loose	4	5	8	6	10	7	11	9	13	10	14
Loose	10	12	14	12	18	14	20	16	24	18	24
Medium	30	16	20	18	27	20	30	25	38	28	41
Dense	50	25	34	29	44	31	46	40	61	44	64
Cohesive											
Soft	4	2	2	2	3	2	3	3	4	3	4
Stiff	8	4	6	5	7	6	8	7	9	7	9
Very Stiff	16	8	10	9	12	10	13	12	15	12	16
Hard	32	14	19	17	22	18	24	21	27	23	30

Pipe Piles	SPT "Nc"*	12x 0.25	12x 0.38	16x 0.38	16x 0.50	24x 0.38	24x 0.50
Granular							
V. Loose	4	7	8	11	12	20	22
L oose	10	14	15	20	21	33	37
Medium	30	20	23	29	34	48	57
Dense	50	32	37	46	54	81	87
Cohesive							
Soft	4	2	3	3	3	4	4
Stiff	8	6	7	8	9	11	12
Very Stiff	16	10	11	13	14	18	18
Hard	32	18	20	24	26	34	36

Prestressed Piles	SPT "Nc"*	12" prest.	14" prest.	16" prest.
Granular				
V. Loose	4	8	8	11
Loose	10	12	14	19
Medium	30	22	24	28
Dense	50	34	38	45
Cohesive				
Soft	4	3	3	3
Stiff	8	7	7	8
Very Stiff	16	12	12	14
Hard	32	22	23	26

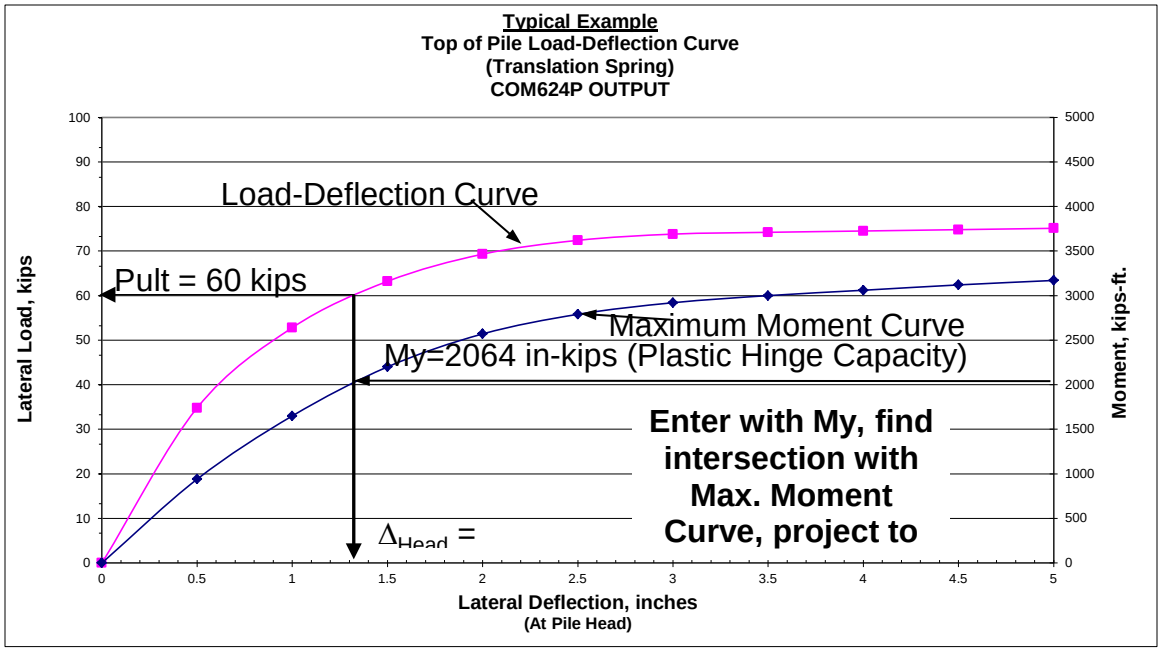

Figure 1.10.4.2-(3)

Translational Capacities:

The base shear resistance of pile supported footings, or caps, is typically not included in calculating the nominal passive resistance. The same equation used for determining the nominal translational capacity of footings should be used for pile caps, neglecting all base shear resistance. The nominal passive resistance of pile caps can be used for both seismic and non-seismic design conditions.

For non-seismic loading conditions the following nominal resistances in the following table may be used provided the site conditions generally satisfy the assumptions given below the table.

Nominal Pile Translational Resistances (kips):

H-piles W=Weak S=Strong	SPT "Nc"*	HP 10x42		HP 12x53		HP 12x74		HP 14x89		HP 14x117	
Granular		W	S	W	S	W	S	W	S	W	S
V. Loose	4	12	21	14	25	25	43	29	50	41	69
Loose	10	13	23	16	27	28	48	33	55	46	82
Medium	30	16	26	17	31	31	53	37	62	51	86
Dense	50	17	29	20	34	34	59	41	69	57	93
Cohesive											
Soft	4	16	25	17	28	29	47	34	53	45	69
Stiff	8	20	34	22	37	38	63	43	70	59	94
Very Stiff	16	24	43	25	47	49	83	55	90	76	122
Hard	32	30	54	29	58	58	104	63	113	92	155

Pipe Piles	SPT "Nc"*	12x 0.25	12x 0.38	16x 0.38	16x 0.50	24x 0.38	24x 0.50
Granular							
V. Loose	4	22	29	43	52	85	103
Loose	10	25	32	48	57	95	113
Medium	30	29	37	54	65	107	130
Dense	50	31	41	60	71	118	143
Cohesive							
Soft	4	26	34	46	55	82	98
Stiff	8	34	44	60	72	104	126
Very Stiff	16	42	56	74	91	130	158
Hard	32	50	69	91	110	151	187

Prestressed Piles	SPT "Nc"*	12" Prest.	14" prest.	16" prest.
Granular				
V. Loose	4	12	16	23
Loose	10	15	18	25
Medium	30	18	20	29
Dense	50	20	23	31
Cohesive				
Soft	4	18	19	25
Stiff	8	22	23	31
Very Stiff	16	27	27	36
Hard	32	29	29	43

* The "Nc" values to use are the averaged "Nc" values over a depth of 8 to 10 pile diameters (8D to 10D).

The above translational stiffnesses and allowable capacities are based on the Broms' method and the following assumptions:

- Free head condition, no applied moment
- Pile top at the ground surface
- Level ground surface
- One, uniform soil layer with uniform soil properties
- No groundwater
- Static loading, no cyclic soil degradation
- Constant pile properties and dimensions
- Stiffnesses are for first 1/2 inch deflection (initial secant modulus)
- Values are for "long" pile conditions and minimum pile embedment depths are required. If pile lengths are less than 75 percent of the assumed penetration lengths below, a separate Broms', COM624P or LPILE analysis is required.

	"Nc"	Assumed Length (ft)
Granular	4	55
	10	50
	30	40
	50	35
Cohesive	4	55
	8	50
	16	40
	32	35

The Foundation Designer should be consulted for piles installed in conditions outside of the above stated assumptions and/or a COM624P or LPILE analysis should be performed.

For seismic design conditions, the maximum moment capacity of the pile (My) must be calculated separately and compared to the COM624P or LPILE output to determine the nominal lateral resistance and associated deflection. An example is shown in *Figure 1.10.4.2-(3)*.

Translational Load -Deflection Curve:

Translational Load Non-seismic - Deflection estimates for piles designed under non-seismic conditions should be determined using the initial pile stiffness values given in the above tables extended up to the nominal pile resistance (bilinear curve). This curve, representing the pile group, is then added to the load-deflection curve developed for the pile cap. A COM624P or LPILE analysis may also be used as described below if so desired.

Translational Load Seismic - Deflection estimates for seismic design conditions are determined from the composite load deflection curves developed by combining the pile group stiffness from the COM624P or LPILE analysis with the stiffness contribution from the pile cap. An example of this procedure is provided in the section on "Load-Deflection Curves, Stiffness Iteration Analysis and Capacity Checks".

Pile Group Effects and P Multipliers:

The P multiplier approach, utilizing the LPILE program, is recommended to evaluate the response of pile groups subjected to lateral loads. The P multipliers are applied to standard p-y curves to account for pile group effects. Section 10 of the AASHTO LRFD Bridge Design Specifications should be referenced for the P multiplier values to be used in the analysis. The P multipliers are dependent upon the center to center spacing of piles in the group in the direction of loading expressed in multiples of pile diameter. The Foundation Designer should be consulted for the procedures to use in this design approach.

Rotational Stiffnesses:

Normally the rotational stiffness should only include the moment versus rotation stiffness from the pile group. The pile cap is usually considered rigid in this analysis and no additional stiffness due to soil bearing at the base of the pile cap/footing is included. Therefore, the rotational stiffness of pile caps is simply a function of pile axial compression and the pile group layout. See the example problem in the Bridge Example Designs notebook for more details. Static formulas for pile compression are typically used. The computer program APILE2 may also be used for a more detailed analysis of the predicted load-deflection behavior of a single, axially loaded pile. This program takes into account unusual soil conditions and the nonlinear aspects of pile-soil interaction. The Foundation Designer should be consulted for axial pile stiffnesses using the APILE2 program.

The following formulas for axial pile stiffness may be used in developing rotational stiffnesses for pile supported footings. For friction piles, the APILE2 program may also be utilized to better model axial stiffness when axial loads are greater than about half of the nominal resistance of the pile.

End bearing pile:	**Friction piles:**
$Kv = \frac{AE}{L}$	$Kv = \frac{2AE}{L}$

with: Kv = Axial Pile Stiffness (kN/mm)
A = Area of pile normal to load
L = Length of pile
E = Young's Modulus of Pile Material

Compute the rotation stiffness (M vs. ∅) for a pile group as follows:

Assume a pile head deflection for the pile farthest from the pile group centroid.

Using the appropriate relation from above, determine the pile force accompanying this assumed pile head deflection. Prorate the other pile forces by their location relative to the group centroid. Piles on one side of the centroid will have positive forces and piles on the other side will have negative forces (uplift).

Determine the pile group moment by summing the product of the pile force and the pile-to-group centroid distance for all piles. This is the moment (M) required to rotate the footing through an angle of ∅. Determine the angle ∅ as the arctan of the assumed extreme pile head deflection divided by the pile-to-centroid distance.

The relation of M to ∅ is the initial rotation stiffness.

Rotational Resistances:

For pile supported footings, compare computed pile loads to nominal axial pile resistances for seismic cases and to factored axial pile resistances for non-seismic cases, unless otherwise recommended by the Foundation designer.

Rotational Load-Deflection Curve:

Use the initial stiffness up to the resistance limit. The curve form is:

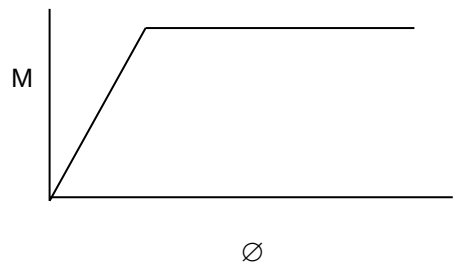

(4) Load-Deflection Curves, Stiffness Iteration Analysis and Capacity Checks:

Using the previous information one develops a composite load-deflection relationship for each applicable support spring. Next, an initial spring constant is assumed, the structure and loading analyzed and the resulting load-deflection position compared to the initial assumption. Cycling through this process may be needed to achieve reasonable closure. See the graphical explanation below.

It is also necessary to check the required resistance against the factored or nominal resistance. Resistance factors of 1.0 are typically used in the case of seismic design, however this should be verified by the Foundation Designer. Factored resistances are used for all other cases. For the rotational capacity, this is normally done by checking the resultant forces against the maximum (nominal), effective soil bearing resistance (footings) or nominal pile resistance.

For lateral pile resistances, the nominal resistance is either the maximum determined from the LPILE analysis (based on My of the pile for seismic design), or from the tables. The nominal resistance may also be a function of maximum allowable structural deflections. If the limiting resistance is exceeded when using the initial spring coefficient then modified springs are required as shown in the graphical explanation below.

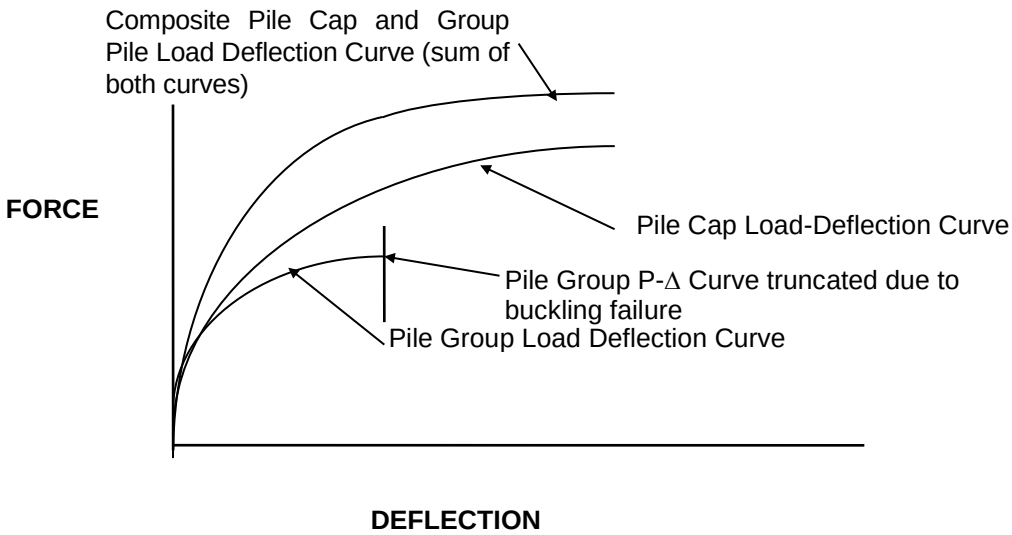

Development Composite Load - Deflection Curve

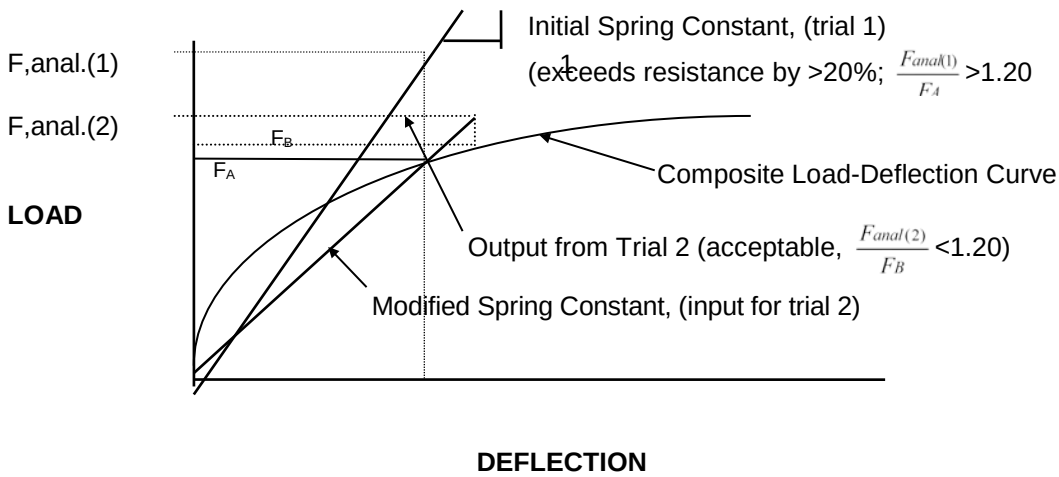

Spring Iteration Process and Resistance Checks

1.10.4.3 Drilled Shaft Modeling (Fully Coupled)

Programs M-STRUDL and COM624 or LPILE can be used in an iterative approach to model a drilled shaft supported structure. The approach is to determine the approximate force magnitudes for the controlling loading and then use these forces to develop a better representation of the superstructure/shaft/soil problem. This allows a good approximation of soil stiffness non-linearity as well as the non-linearity of the shaft-soil interaction.

The following steps would be typical for drilled shaft modeling for design and checking:

1. Develop a full M-STRUDL model (superstructure with substructure) using shaft fixity at two shaft diameters below the groundline. Using the model, run the controlling load case – typically seismic loading will be the controlling case and the worst effect, either longitudinal or transverse, will be used for the next steps.

2. Develop COM624 or LPILE models (shaft with soil) for each bent using the full shaft from its tip to its connection to the superstructure.

3. Using the top of shaft shear and moment results from the first M-STRUDL, load the COM624 or LPILE models to develop a stiffness matrix for each shaft. This represents a condensing of the substructure/soil effect to the point of connection with the superstructure. The LPILE program can develop a stiffness matrix for you.

4. Develop a new M-STRUDL model using only the superstructure and supports represented by the COM624 or LPILE developed substructure stiffness matrices. Run the same controlling load case.

5. Use the top of shaft shear and moment results from this latest M-STRUDL to again load the COM624 or LPILE models to develop new substructure stiffness matrices.

6. Use the latest M-STRUDL model with the most recent substructure stiffness matrices and again run the same controlling load case.

7. Compare the results of this M-STRUDL with the previous M-STRUDL run for correlation. If the results do not correlate well, cycle through steps 5 and 6 to get better convergence. Results which change no more than 15% per cycle are normally sufficiently close and further cycling is not required.

A sample problem using this approach is in shown in the *Bridge Example Designs Notebook.*

1.10.5 Foundation Design

Foundation design should be performed in accordance with the most current version of the AASHTO LRFD Bridge Design Specifications. Foundation design should also follow the policies and guidelines described in the ODOT Geotechnical Design Manual, available through the ODOT Geo-Environmental Section web page.

FHWA foundation design manuals are also acceptable methods for use in foundation design. Subsurface investigations for all structures should be conducted in accordance with the AASHTO Manual On Subsurface Investigations (1988). Materials classifications should be in accordance with the ODOT Soil and Rock Classification Manual (1987).

1.10.5.1 Foundation Design Process

A flow chart showing the overall foundation design process, related to plans development, is provided in *Figure 1.10.5.1A*. It is important for the Foundation and Bridge Designers to establish and maintain good communication and exchange of information throughout the entire bridge design process. Any questions regarding foundation design issues should be brought to the attention of the Foundation Designer as early as possible in the design process. For most typical bridge design projects two Foundation Reports are provided, the TS&L Foundation Design Memo and the Foundation Report. A description of the phases follows.

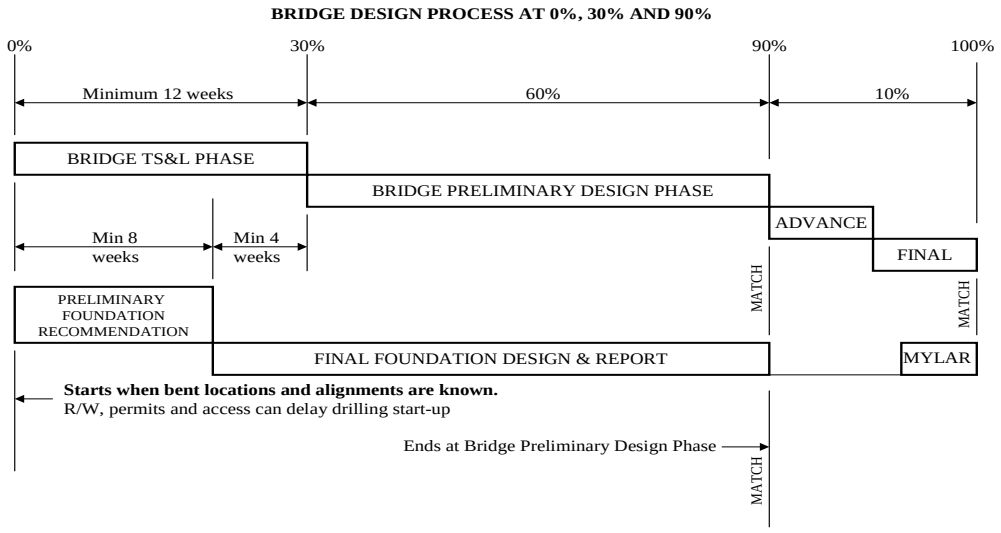

Figure 1.10.5.1A

(1) TS&L Foundation Design Memo

The purpose of this memo is to provide sufficient data for developing TS&L plans and cost estimates and for permitting purposes. The memo is generally provided before the subsurface investigation is completed. It provides a brief description of the proposed project, the anticipated subsurface conditions (based on existing geologic knowledge of the site and/or as-built information) and presents preliminary foundation design recommendations such as foundation types and preliminary resistances. The potential for liquefaction and associated effects are also briefly discussed. The memo is to be provided no later than two-thirds of the way through the TS&L design process.

(2) Foundation Report

This report is to be provided by the end of the Preliminary Bridge Design phase, which is usually 90 percent design. It provides the final foundation design recommendations for the structure and a Foundation Data Sheet for each structure. In order to conduct a proper foundation investigation and complete this report the Foundation Designer will need the following information:

- Bent locations and layout
- Proposed roadway grade (fill heights)
- Anticipated foundation loads
- Foundation size/diameter and depth required to meet structural needs
- Allowable structure settlements (total and differential)
- Proposed retaining wall locations
- Estimated scour depths (from Hydraulics Report)
- Construction or Environmental constraints that could affect the type of foundation selected

The report will contain the all geotechnical data on the site including final boring logs, Foundation Data Sheets, laboratory test results, foundation soil design parameters, recommended foundation types, sizes and resistances, and other recommendations. Construction recommendations are included along with project specific specifications, which are to be included in the contract Special Provisions. Seismic foundation design recommendations are provided including site characterization and soil coefficients, estimated ground acceleration and any liquefaction mitigation measures considered necessary (See *BDDM 1.17*).

The Foundation Designer should review the final Plans and Special Provisions for the structure to make sure they are consistent with the design recommendations provided in the Foundation Report. Any discrepancies should be resolved and Addendums to the report issued if necessary. A copy of the Foundation Report should be included in the project file and is made available to contractors through the Project Manager's Office when the project is advertised for bid.

1.10.5.2 Bridge Foundation Records

"As-constructed" records on existing bridge foundations may be found in the Salem Bridge Engineering Office from the following sources:

- Pile Record Books
- "As-constructed" Bridge Plans (available through ODOT intranet)
- Microfilm Construction Records
- Bridge Maintenance Files

1.10.5.3 Spread Footing Foundation Design

Spread footings are considered early on in the design process as a possible economical foundation option if the foundation conditions are suitable. The design of spread footings is usually an interactive process between the foundation and structural designers. The bottom of spread footings should be at least 6 feet below the bottom of the streambed unless non-erodable bedrock is present. The bottom of spread footings should also be below the estimated depth of scour for the 500 year flood event. The top of the footing should be below the depth of scour estimated for the 100 year event. Spread footings are not to be constructed on soils that may liquefy under earthquake loading. If spread footings are recommended the foundation designer will provide the following design recommendations in the Foundation Report:

(1) Footing Elevations

The elevations of the proposed footings will be provided along with a clear description of the foundation materials the footing is to be constructed on.

(2) Nominal and Factored Bearing Resistances

The nominal and factored bearing resistances will be provided for various effective footing widths likely to be used. For scour conditions the following resistance factors should be used unless otherwise justified.

100-yr scour or Overtopping Flood: 0.70
500-yr scour or Overtopping: 1.0
Extreme Event Limit I (Earthquake Loading): 1.0

Bearing resistances corresponding to 1 inch of settlement (Service Limit State) should also typically be provided unless other settlement limits are established by the structural designer. The structural designer should communicate all footing settlement limits to the Foundation Designer. For soil conditions, the bearing resistances provided assume the footing pressures are uniform loads acting over effective footing dimensions B' and L' (i.e. effective footing width and length ((B or L) -2e) as determined by the Meyerhof method. For footings on rock, the resistances provided assume triangular or trapezoidal stress distribution and maximum toe bearing conditions.

Minimum footing setback on slopes and embedment depths will be provided.

(3) Sliding Stability and Eccentricity

The following soil parameters will be provided for calculating frictional sliding resistance and active and passive earth pressures.

Soil Unit Weight, γ (soil above footing base)
Soil Friction Angle, ϕ, (soil above footing base)
Active Earth Pressure Coefficient, Ka
Passive Earth Pressure Coefficient, Kp
Coefficient of Sliding, tan δ

(4) Overall Stability

The foundation designer will evaluate overall stability and provide the maximum footing load which can be applied to the design slope while maintaining a factor of safety of at least 1.5 (1.0 for extreme event conditions).

1.10.5.4 Pile Foundations

If spread footings are unsuitable or uneconomical for foundation support, driven piles should be considered. Consult with the foundation designer to determine the most appropriate pile type, size and bearing resistance to support the desired pile loads. Typical pile types, sizes and factored resistances used on ODOT projects are listed below. The factored resistances provided are based on the factored structural resistance of the pile and are for use in preliminary design. The Foundation Designer should verify these resistances for final design and provide the nominal resistances required to achieve the factored resistance.

Steel and Timber Piling

TYPE	TYPICAL PILE BEARING RESISTANCE (tons)
TIMBER PILES	42
Treated (untreated) timber	
STEEL PILES	
HP 10x42	85
HP 10x57	110
HP 12x53	110
HP 12x74	160
HP 14x73	150
HP 14x89	180
HP 14x117	240
PIPE PILES	
PP 12.75 x 0.375	110
PP 14.0 x 0.438	130
PP 16.0 x 0.500	170
PP 20.0 x 0.500	215
PP 24.0 x 0.500	265

Precast Prestressed Piling

See *Drawing 43308*.

The bending resistance of precast prestressed concrete piles is much less than steel piles of comparable bearing resistance. If seismic loads and lateral resistance are a concern, precast prestressed piles should normally not be used. If they are desired, either for aesthetic or corrosion considerations, a special pile design for each project will be necessary. If this is the case, notify the Foundation Designer as soon as possible so concrete piles can be considered in the foundation analysis and report.

Where precast prestressed piles are used as columns, see *Design Procedures for Pretensioned Prestressed Concrete Bearing Piles and Sheet Piles* by T. Y. Lin.

Drawing 43308 permits the use of a prestress force yielding a final concrete stress of 700 to 1000 psi depending on the range of stress that best suits handling needs. For example, a short pile requires less stress than a long pile for pickup and handling so the required number of strands could be fewer.

This change could affect the capacity of the pile if it is used as an unsupported column. If a stress greater than 700 psi is needed for your design, add a note to the plans requiring the contractor to use the appropriate prestress force.

Piling Considerations

(1) Pile Resistance

Nominal pile resistances will be provided according to AASHTO LRFD design procedures. The resistance factor will be provided according to the construction quality control method recommended in the Foundation Report (i.e. dynamic formula, wave equation, Pile Driving Analyzer, etc.). The foundation and bridge designers should confer to make sure the pile types and sizes selected take full advantage of the available geotechnical and structural resistances if possible.

(2) Downdrag Loads

Pile downdrag loads, due to soil settlement other than that caused by dynamic (seismic) loading, are added to the factored vertical dead loads on the foundation in the Strength Limit state. Load Factors for downdrag loads will be recommended by the Foundation Designer. Transient loads should not be included with the downdrag loads in either the strength or service limit state calculations. Downdrag loads resulting from liquefaction or dynamic (earthquake) induced soil settlement should be considered in the Extreme Event limit state pile design. Downdrag loads resulting from soil liquefaction are different than those caused from static loading and they should not be combined in the Extreme Limit state analysis.

At sites where downdrag conditions exist, the pile must overcome the frictional resistance in the downdrag zone during installation. This resistance should not be included in the calculation of available factored resistance since after installation it reverses over time becoming the static downdrag load.

(3) Uplift Capacity

In general, the uplift resistance is the same as the pile friction (side) resistance. Resistance factors and factored uplift resistances will be provided in the Foundation Report. Friction resistance in downdrag zones should be considered available for uplift resistance. The Foundation Designer should be consulted regarding the ability of the piles to resist uplift forces under various loading conditions (static or dynamic).

(4) Minimum Pile Tip Elevation

Minimum pile tip elevations (embedment depths) are typically required to meet one or more of the following design requirements:

- **a)** Lateral Load
- **b)** Scour
- **c)** Liquefaction
- **d)** Uplift loads
- **e)** Settlement and/or Downdrag
- **f)** Required soil/rock bearing strata

The required pile tips elevations should be shown on the plans and labeled as “Required Minimum Pile Tip Elevations”. Large lateral loads due to seismic, or other, conditions may result in the need for additional piling, or larger piles, in order to satisfy lateral deflection criteria or other requirements. This may in turn result in individual axial pile loads being much less than the maximum factored resistances available (either geotechnical or structural). Conversely, if pile tip elevations are needed to meet scour, uplift, or other requirements, the piles may need to be driven through very dense materials to nominal resistances much higher than needed for supporting just the axial loads. Close communication is needed between the Foundation and Bridge Designers to determine the most economical foundation design under these conditions.

(5) Pile Group Settlement

Pile group settlement should be compared to the maximum allowable settlement and pile depths or layout adjusted if necessary to reduce the estimated settlement to acceptable levels.

(6) Pile Group Effects

For pile group lateral load analysis use the p-y multiplier methods described in AASHTO and the FHWA Manual on the "Design and Construction of Driven Pile Foundations".

(7) Pile Spacing

Use a minimum spacing of 3 feet for piles placed underwater. Above water pile spacing should be no closer than 2.5B.

(8) Pile Tip Treatment

Where pile tip reinforcement is required, specify commercial cast steel points or shoes. Where closed-ended pipe piles are required, specify a welded plate the same diameter as the pipe pile. See the *Figure 1.10.5.4A* below for pipe pile tip details.

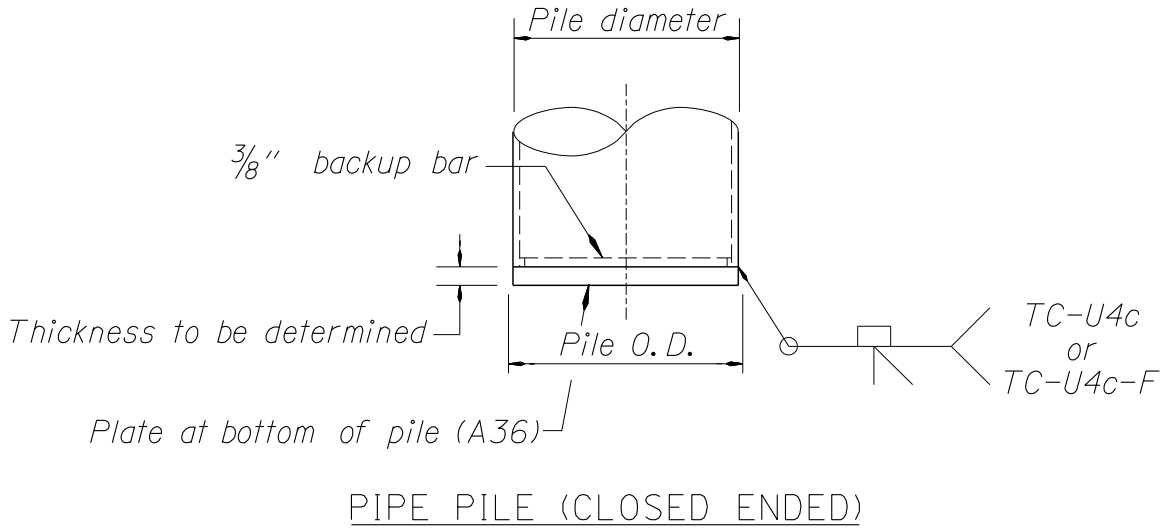

Figure 1.10.5.4A

(9) Pile Foundation Design Recommendations

The Foundation Designer will provide final foundation recommendations in the Foundation Report, or earlier in the design process as needed. The following recommendations will typically be provided as a minimum:

a) Pile Resistance: The nominal pile resistances (Rn)) will be provided along with estimated pile lengths for one or more pile types. These values may be in tables or graphs of Rn versus depth may be provided. Modified Rn values will be provided as necessary to account for scour, and/or liquefaction conditions. The resistance factor will be provided along with the recommended method of construction control (i.e. dynamic formula, wave equation, etc.). Downdrag loads, if present, will be provided along with an explanation of the cause of the downdrag loads. The depth or thickness of the downdrag zone will be provided.

b) The nominal pile uplift resistance will be provided either as a function of depth or for a given pile length (typically associated with the minimum tip elevation). The pile uplift resistance will be provided for normal static conditions and for any reduced capacity condition such as scour or liquefaction. The resistance factor will be provided.

c) P-Y Curves: Foundation design parameters will be provided to develop p-y curves for lateral load analysis using either the COM624 or LPILE computer programs. Two sets of data may be required, one for static conditions and one for dynamic (liquefied soil) conditions.

d) Required Pile Tip Elevations: Required minimum pile tip elevations will be provided along with an explanation of their basis. These tip elevations (minimum pile embedments) should be checked to see if they need to be modified to meet other design requirements, such as lateral loading requirements. Any changes to the recommended required tip elevations should be reviewed by the Foundation Designer.

e) Special Provisions: The following foundation related items will be provided, as necessary, for Section 00520 of the project Special Provisions:

i. Wave Equation Input (if WEAP is specified for driving criteria)
ii. Recommended number of pile splices
iii. Pile tip treatment, tip reinforcement recommendations and specifications
iv. Recommendations regarding pile freeze, jetting, preboring or use of followers

Piling Details

(1) Steel Pile Footing Embedment to Develop Fixity

It may be necessary to develop lateral load resistance in piles or pile groups. To develop the required lateral load capacities, piles must be embedded in pile caps or footings adequately to develop the full moment capacity of the pile section.

If lateral load capacity is not needed, a pile embedment length of 12 inches is sufficient.

A simplified method of determining minimum pile embedment was developed as follows:

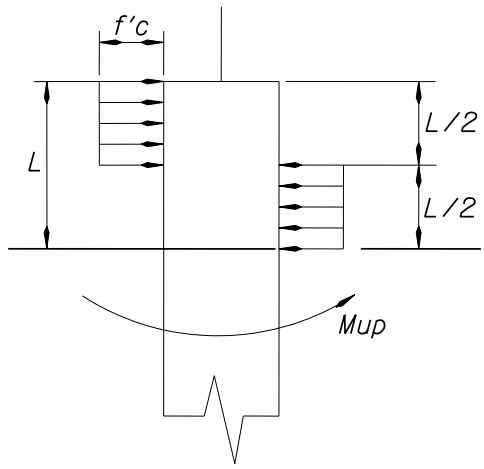

$$Mup = \phi\, f'c\, D\left(\frac{L}{2} \times \frac{3L}{4} - \frac{L}{2} \times \frac{L}{4}\right)$$

$$Mup = \phi\, f'c\, D\, L^2\, (3/8 - 1/8)$$

$$4Mup = \phi\, f'c\, D\, L^2$$

$$L = \sqrt{\frac{4Mup}{\phi\, f'c\, D}}$$

Figure 1.10.5.4B

Typical minimum embedment to develop fixity for f'c = 3.3 ksi and fb = 36 ksi is:

Piles:	Minimum Embedment (in)
HP 10X42 and HP 12x53	20
HP 12X74 and HP 14X89	24
HP 14X117	27
PP 10 ¾ X 0.38 and PP 12 ¾ X 0.38	15
PP 16 X 0.38 and PP 16 X 0.50	20

(2) Pipe Pile Cover Plates

Provide a welded cover plate as detailed below in *Figure 1.10.5.4C*.

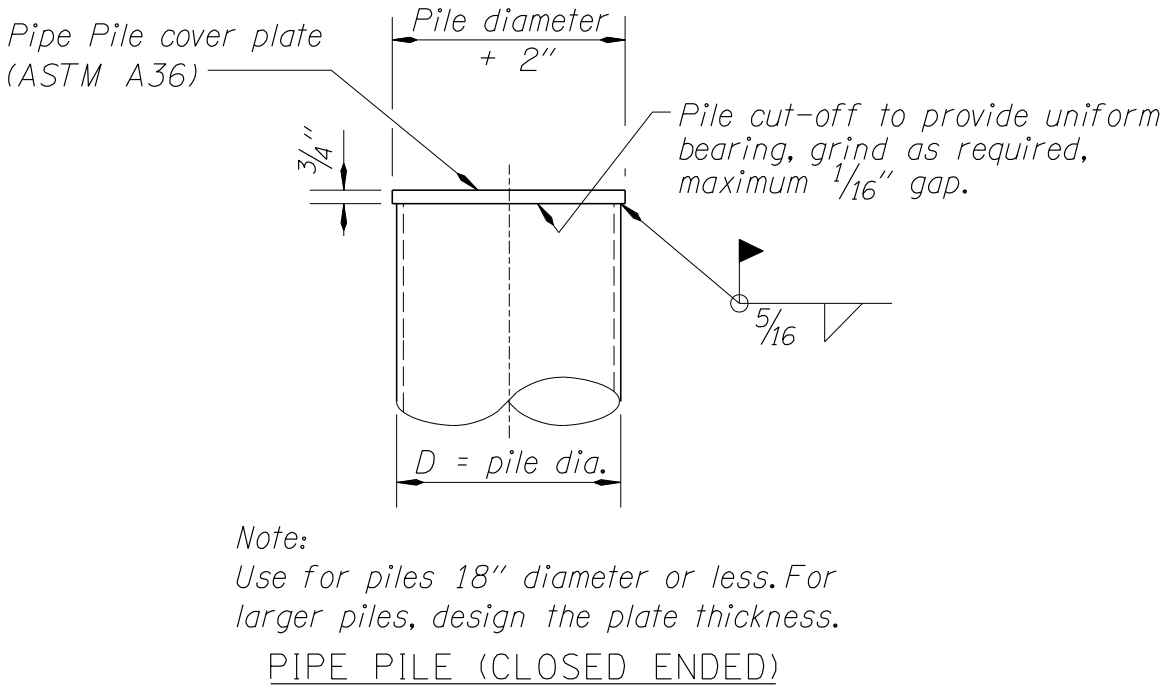

Figure 1.10.5.4C

(3) Steel Pile Splices

If splicing of steel piles is anticipated, show one or both of the following details on the plans.

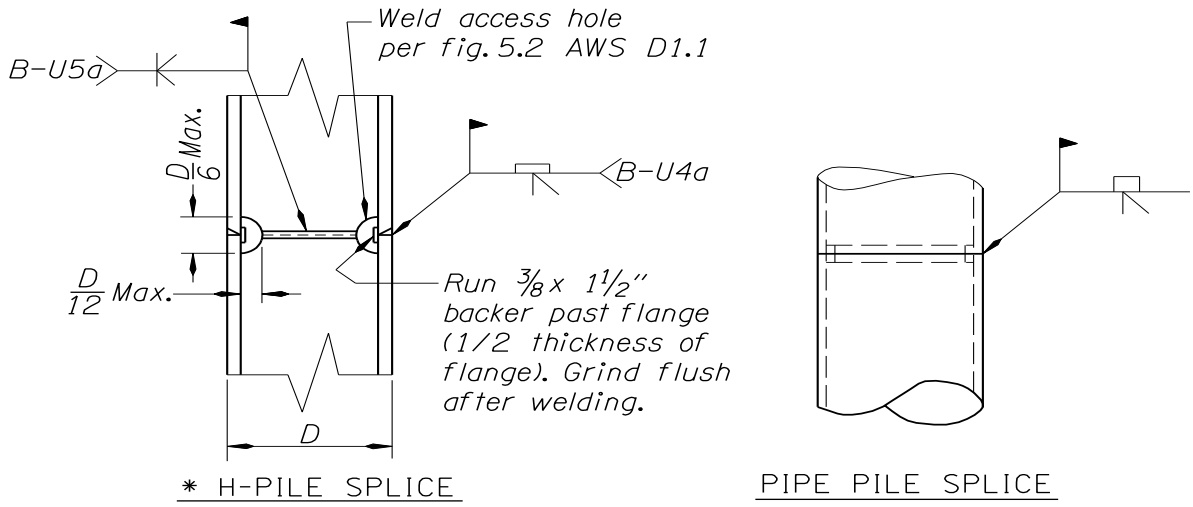

Figure 1.10.5.4D

Note – Manufactured A709 Grade 36 H-pile splices may be used if located a minimum of 40 feet below the bottom of the footing and installed according to the manufacturer's recommendations.

(4) Anchor Piles

Two methods of anchoring piles are shown. Other methods such as extending the top plate and using welded studs or other shear connectors may be appropriate.

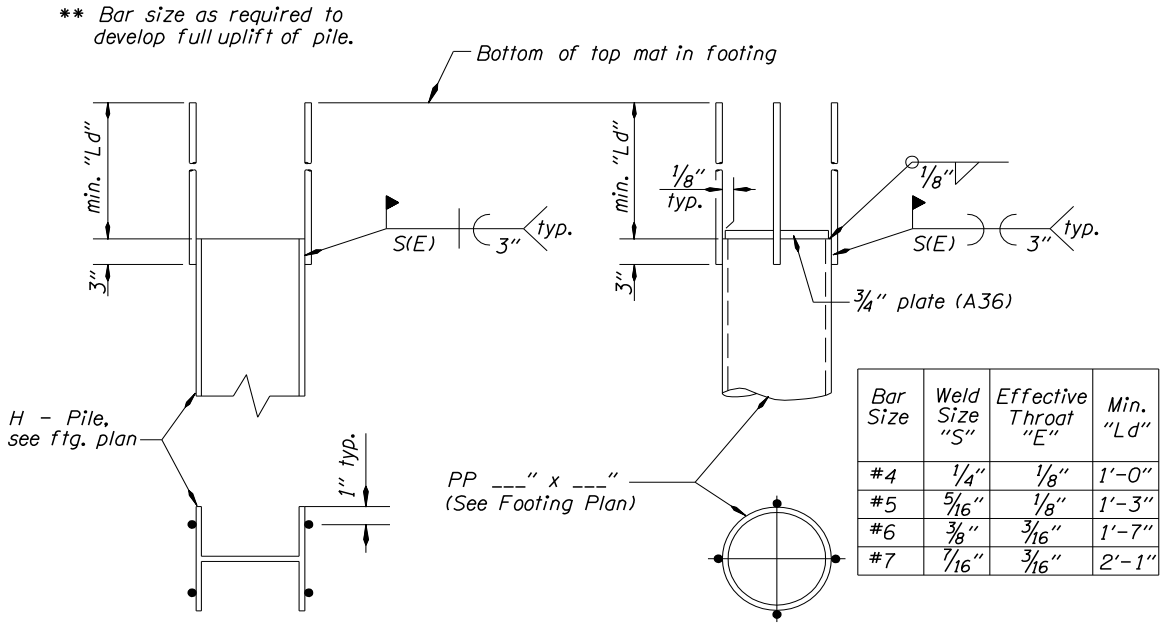

Bar Size	Weld Size "S"	Effective Throat "E"	Min. "Ld"
#4	1/4"	1/8"	1'-0"
#5	5/16"	1/8"	1'-3"
#6	3/8"	3/16"	1'-7"
#7	7/16"	3/16"	2'-1"

* Provide ASTM A706, except ASTM A615 Grade 60 or ASTM A496 may be used if copies of the chemical composition analysis are submitted and approved as weldable by the engineer.

ANCHOR PILE DETAILS

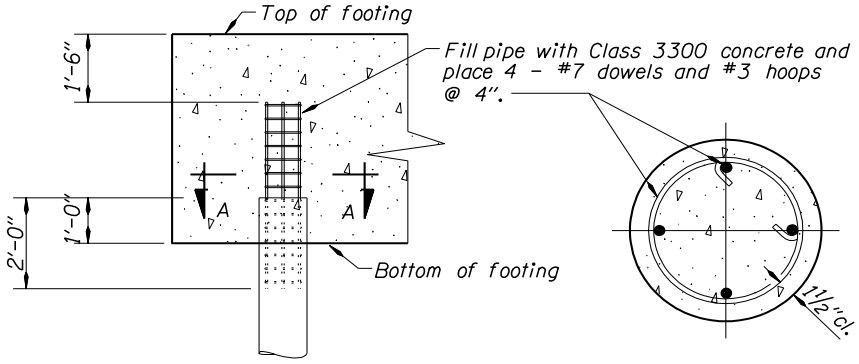

FILLED PIPE PILE ANCHOR DETAILS

Figure 1.10.4.4E

1.10.5.5 Drilled Shafts

Consider the use of drilled shafts for bridge foundations if foundation conditions are favorable and the design is economical (relative to other deep foundation designs). Environmental restrictions or lateral load requirements may also dictate the need for drilled shafts. Shaft constructability is an important consideration in the selection of drilled shafts. Consult with the Foundation Designer regarding these and other issues before selecting drilled shafts for foundation design. The location of drilled shafts should be made early in the design process so an exploration drill hole can be located as close as possible to all drilled shaft locations for design and construction purposes.

A Drilled Shaft Task Force Group exists to aid Foundation and Bridge Designers in selecting, designing, and specifying drilled shaft foundations. This task force is composed of ODOT personnel and representatives from the drilled shaft industry. Consider engaging this group early in the design process, and include in all milestone reviews.

Drilled Shaft Design

(1) Drilled Shaft Diameters and Requirements

Common shaft sizes range from 3 feet to 8 feet in diameter. Larger shaft diameters are less common, but possible. The minimum shaft diameter is 12 inches. Common increments of shaft diameters are:

Shaft Diameter	Increment
< 6 feet	6 inches
> 6 feet	1 foot

The Foundation and Bridge designers should confer and decide early on in the design process the most appropriate shaft diameter(s) to use for the bridge, given the column diameter, loading conditions, subsurface conditions at the site and other factors. Size shafts to meet the following:

Shaft Diameter	Max. Column Size
< 6 feet	shaft dia. – 1.0 foot
≥ 6 feet	shaft dia. – 2.0 feet

(2) Horizontal Tolerances

Consider the constructability of shafts relative to allowable horizontal tolerances. Large shafts are difficult to construct to precise horizontal tolerances. Do not design columns the same diameter as the shaft. Design shafts to meet the requirements in (1) above with the shaft diameter larger than the column it supports. Standard allowable horizontal tolerance is:

Shaft Diameter	Horizontal Tolerance
≤ 6 feet	3 inches
> 6 feet	6 inches

(3) Non-Contact Shaft/Column Splice

Detail shaft/column splice regions in accordance with *Figures 1.10.5.5A or 1.10.5.5B*. The splice region is ($1.7L_{db}$ + a) rounded up to the nearest 3 inches. Note that L_{db} is the basic development length per *LRFD 5.11.2.1*. The non-contact splice detail allows the column to be adjusted horizontally when the shaft is slightly out of position (but still within the horizontal tolerance for the shaft). The shaft vs. column size limits are selected to ensure this adjustment can be made without increasing the standard 1 inch tolerance for the column.

Casing methods shown on *Figures 1.10.5.5A and 1.10.5.5B* are shown as examples only. Other casing methods may be acceptable or more desirable.

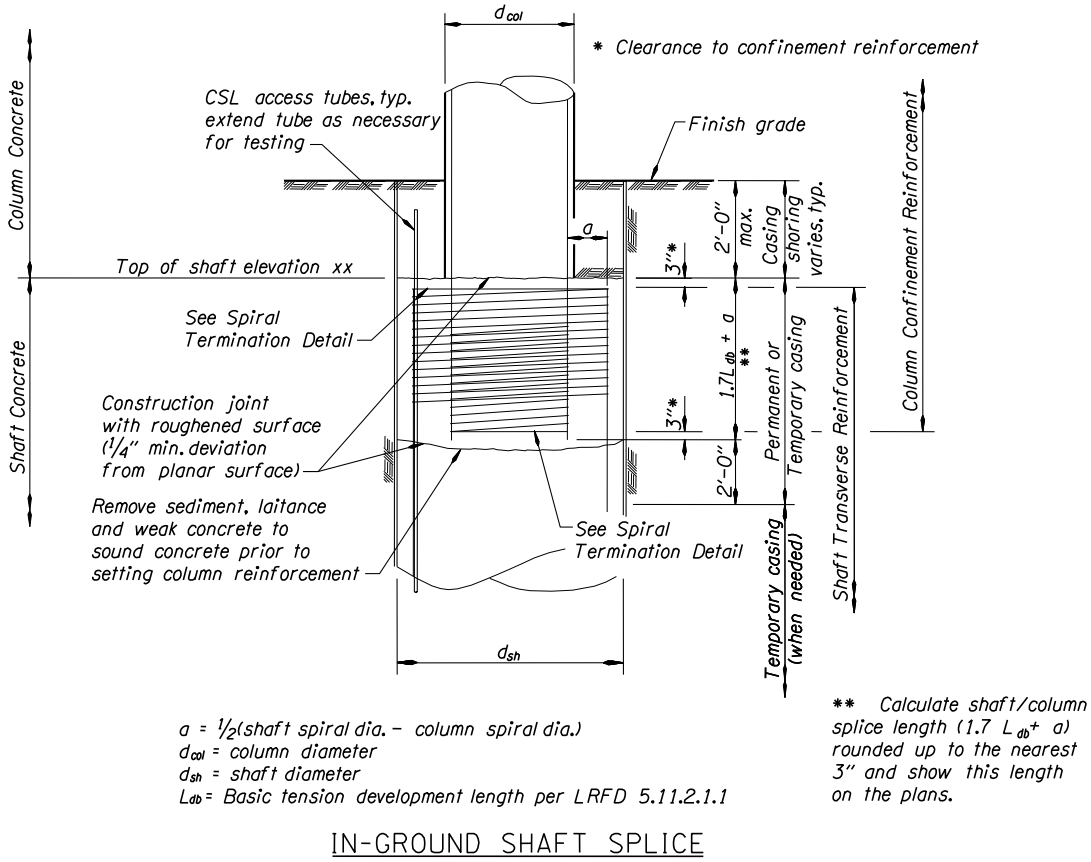

a = 1/2(shaft spiral dia. − column spiral dia.)
d_{col} = column diameter
d_{sh} = shaft diameter
L_{db} = Basic tension development length per LRFD 5.11.2.1.1

** Calculate shaft/column splice length (1.7 L_{db}+ a) rounded up to the nearest 3" and show this length on the plans.

IN-GROUND SHAFT SPLICE

Figure 1.10.5.5A

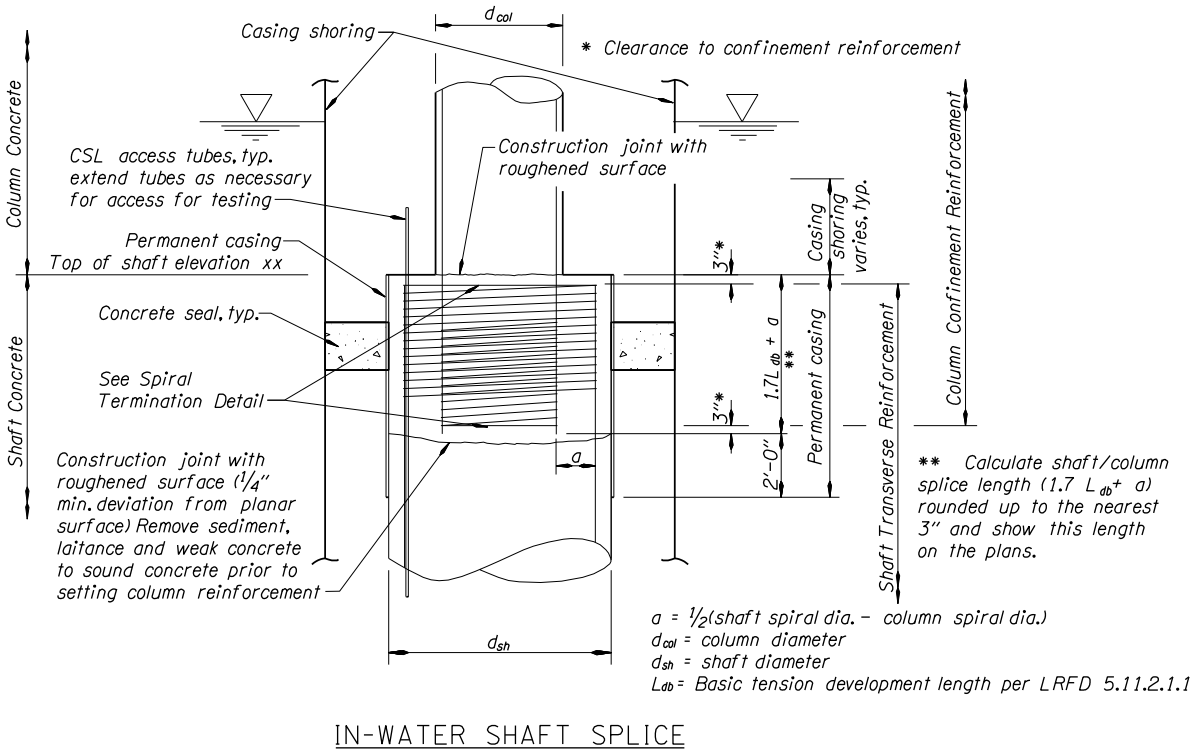

Figure 1.10.5.5B

(4) Downdrag Loads

Downdrag loads, due to soil settlement other than that caused by dynamic (seismic) loading, are added to the factored vertical loads on the foundation in the Strength Limit state. Load Factors for downdrag loads will be provided by the Foundation Designer. Downdrag loads resulting from liquefaction or dynamic (earthquake) induced soil settlement should be considered in the Extreme Event Limit State shaft design. Downdrag loads resulting from soil liquefaction are different than those caused from static loading and they should not be combined in the Extreme Event Limit state analysis.

(5) Shaft Uplift Resistance

Shaft uplift resistance is usually the same as the side friction resistance. Friction resistance in downdrag zones should be considered available for uplift resistance.

(6) Shaft Rock Sockets

Minimum shaft embedment depths into hard rock, or rock sockets, may be required due to one or more of the following design requirements or conditions:

- Lateral Load, due to earthquake loading
- Scour
- Liquefaction
- Uplift loads
- Settlement and/or downdrag
- Required soil/rock bearing strata

For rock sockets constructed inside shafts that will require either temporary or permanent casing, consider designing the diameter of the rock socket smaller than the diameter of the cased shaft above the rock socket. This is necessary to accommodate rock auger tools which are smaller in diameter than the nominal outside diameter of the cased shaft. Reduce the shaft diameters of rock sockets by at least 6 inches in these cases.

The required rock socket embedment depths should be shown on the plans. Under this condition, shaft tip elevations should be shown as "Estimated Tip Elevations" since they are likely to change depending on the actual elevation of the top of rock or hard bearing strata encountered during construction. The Geotechnical Engineer should provide an additional shaft length that accounts for the uncertainty in the top of the bearing layer and this additional length should be specified in the Special Provisions. In these cases, add the additional reinforcement required for this additional shaft length into the estimated quantities provided in *SP 00512*. Also adjust the concrete quantities to include this additional length. Extra reinforcement length can quickly and easily be cut off to provide the proper cage length once the final tip elevation is determined.

(7) Shaft Settlement

Refer to AASHTO methods to calculate the settlement of individual shafts or shaft groups. Compare this settlement to the maximum allowable settlement and modify the shaft design if necessary to reduce the estimated settlement to acceptable levels. End bearing shafts on soil will typically settle more than friction shafts in order to mobilize end bearing resistance.

(8) Shaft Group Effects

For group lateral load analysis use the p-y multiplier methods described in AASHTO and the FHWA Manual "Drilled Shafts: Construction Procedures and Design Methods"

(9) Shaft Spacing

Use a minimum spacing of 3 feet for drilled shafts.

(10) Shaft Foundation Design Recommendations

The Foundation Designer will provide final foundation recommendations in the Foundation Report, or earlier in the design process as needed. The following recommendations will typically be provided as a minimum:

- Shaft Resistance: The nominal shaft resistance (R_n) will be provided along with estimated shaft tip elevations for one or more shaft diameters. This may be in the form of tables or graphs of R_n versus depth may be provided. Modified R_n values will be provided as necessary to account for scour, liquefaction or downdrag conditions. The resistance factors used will be provided. Downdrag loads, if present, will be provided along with an explanation of the cause of the downdrag loads. The depth or thickness of the downdrag zone will be provided.

- Shaft Settlement: Estimates of shaft settlement will be provided for the range of loads expected. The Geotechnical Engineer will need to know the anticipated service loads on the shaft for these calculations along with any limiting settlement criteria.

- Shaft Uplift Resistance: If required for design, the nominal shaft uplift resistance will be provided either as a function of depth or for a given shaft length. The uplift shaft resistance will be provided for normal static conditions and for any reduced capacity condition such as scour or liquefaction. The resistance factors used will be provided.

- P-Y Curves: Foundation design parameters will be provided to develop p-y curves for lateral load analysis. Two sets of data may be required, one for static conditions and one for dynamic (liquefaction) conditions if they exist.

- Special Provisions: The following foundation related items will be provided, as necessary, for *SP 00512*:

    - Designation as either a “friction” or “end-bearing” shaft; for cleanout purposes.
    - Permanent casing (if recommended by Foundation Designer or otherwise required).
    - Crosshole Sonic Log testing requirements.

(11) Crosshole Sonic Log (CSL) Testing

In general CSL tubes are installed in all drilled shafts unless otherwise recommended in the Foundation Report. CSL tubes may not be required in some cases where foundation conditions may be very favorable and there is redundancy in the foundation design. Consult with the Foundation Designer regarding the CSL testing that should be performed on the project.

The rule of thumb is one CSL tube per foot diameter of shaft, rounding up. They are equally spaced around the shaft as shown in *Figure 1.10.5.5C*:

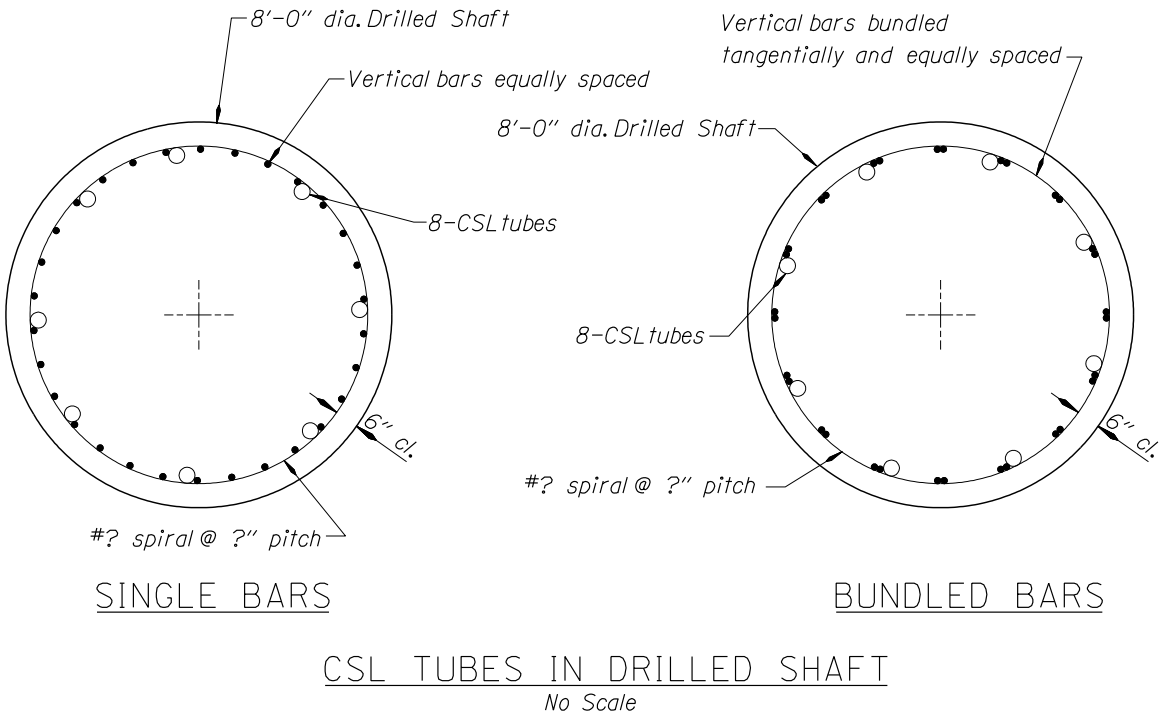

Figure 1.10.5.5C

(12) Shaft Reinforcement

Detail shaft reinforcing to minimize congestion and facilitate concrete placement. Space both longitudinal and transverse reinforcement to provide 5 inches minimum and 9 inches maximum openings between bars. Transverse shaft reinforcement in the non-contact splice region may be reduced to 3 inches minimum openings between bars. Transverse shaft reinforcement may include spiral bars, hoops and/or bundled pairs.

Determine the moment to be transferred from the column to the top of shaft according to the *AASHTO Guide Specifications for LRFD Seismic Bridge Design*. The maximum shaft moment depends on the soil-structure interaction and is generally be larger than the top of shaft moment.

Design shaft transverse reinforcement for the lesser of the plastic shear or elastic seismic shear of the column. Since the shaft diameter must exceed the column diameter, the shaft essentially remains elastic under seismic loads. Therefore, there is no need to satisfy the volumetric ratio and spacing requirements for transverse reinforcement in *LRFD 5.13.4.6.3*.

As well as meeting plastic shear or seismic shear demands, ensure shaft transverse reinforcement within the non-contact splice region meets the following maximum spacing:

$$S_{tr} = (2 * \pi * A_{sp} * f_{ytr} * 1.5 * L_{db}) / (A_l * f_{ul})$$

Where:

S_{tr} = Maximum spacing of transverse shaft reinforcement (in)
A_{sp} = Area of transverse shaft reinforcement (in^2)
f_{ytr} = Yield strength of transverse shaft reinforcement. Use 60 ksi.
L_{db} = Basic tension development length of column vertical bars (in)
A_l = Total area of column vertical bars (in^2)
f_{ul} = Ultimate strength of column longitudinal reinforcement. Use 80 ksi.

The equation above ensures the transverse reinforcement is adequate in order to fully develop the column reinforcing bars. Derivation of this equation can be found in the WSDOT report WS-RD-417.1 "Noncontact Lap Splices in Bridge Column-Shaft Connections". For column sizes 6 feet diameter and greater, #7 or larger welded hoops will likely be needed to meet both the equation above and the minimum 3 inch opening for transverse shaft reinforcement in the splice region.

(13) Shaft Concrete

Use Class 4000 – 3/8 concrete in all drilled shafts. Concrete for drilled shafts should generally have a high slump and relatively small aggregate size in order to properly flow through the shaft reinforcement and provide the required fluid pressures against the sides of the bore hole. This is necessary to develop the desired friction resistance. Placement of concrete may be by free fall (in dry holes) or by tremie pipe (in dry or wet holes). At the present time, free fall placement of concrete in dry holes is allowed to unlimited depths. Refer to the report "Effects of Free Fall Concrete in Drilled Shafts" (ADSC Report No. TL112 for more information.

(14) Cover Requirements

Provide the following concrete cover for drilled shafts:

Shaft Diameter	Horizontal Tolerance
≤ 3 feet	3 inches
5 feet. > D > 3 feet	4 inches
≥5 feet	6 inches

(15) Reinforcement Connections

Do not specify hooked longitudinal bars at the top of the shaft (extending into footings or caps) that will conflict with temporary casing removal. Design and detail reinforcement considering the requirements of temporary casing.

(16) Reinforcement Splicing

For shafts constructed at locations where a minimum penetration into the rock (or hard strata) is required and the elevation of the top of rock is uncertain, consider adding additional lengths of reinforcement to avoid the need for splicing. Once the final tip elevation is determined, any remaining rebar length can be cut off and removed. Splicing of reinforcement is undesirable because it usually results in delaying the concrete pour which could lead to other problems. If splicing is required, provide splicing details on the plans.

(17) Shaft Elevations

Show or list the "Top of Shaft" elevation on the plans for each drilled shaft. This elevation is the top of the drilled shaft concrete. Also show or list shaft tip elevations. If shaft tip elevations are anticipated to vary due to uncertainties in the top of the bearing strata then label these as "Estimated Tip Elevations" and show the required penetration depth into the bearing strata.

(18) Permanent Casing

The use of permanent casing may be beneficial in locations especially where the top of shafts are constructed in open water such as rivers or lakes. The use of permanent casing can simplify construction by eliminating the need for any temporary casing and forms. If permanent casing is desired it should be taken into account in the structural analysis of the bridge because it increases the stiffness and strength of the shaft and may significantly affect the overall response of a bridge subject to large lateral loads. It also affects the geotechnical side resistance. Consult with the Geotechnical Engineer if permanent casing is to be used.

When permanent casing is specified remember to take OSHA requirements into account when determining casing lengths. OSHA may require casing to extend at least 2 feet above the ground surface during construction. This additional length may later be cut off and removed after the shaft is constructed.

If permanent casing is required, provide casing diameters, thicknesses and lengths in the special provisions.

(19) Shaft Diameter for Seismic Analysis

Drilled shafts are generally constructed slightly larger than the nominal diameter shown. For example, in soil conditions where casing is required, a 6-foot diameter shaft cannot be drilled inside a 6-foot diameter casing. A larger size casing diameter is required. Discuss with the Foundation Designer whether or not casing may be required and a larger shaft size should be checked in the structure stiffness analysis (i.e., seismic analysis). An oversize of 6 inches is recommended for shafts up to 6 ft. diameter and 12 inches is recommended for larger diameter shafts.

(20) Drilled Shaft Preconstruction Meeting

Preconstruction meetings are held prior to beginning drilled shaft construction. This meeting should be attended by the structural designer who designed the shaft.

1.10.5.6 Seismic Foundation Recommendations

The foundation designer shall provide the design Peak Bedrock Accelerations (PGAs) for the 500 and 1000 year recurrence events along with the AASHTO site soil coefficients. Liquefaction potential is addressed along with recommendations regarding estimated lateral deformations of embankments and/or dynamic settlement and downdrag potential. Downdrag loads resulting from liquefaction or dynamic compaction (settlement) will be provided. Liquefaction mitigation measures and recommendations are addressed if necessary (see *BDDM 1.17.4* for Liquefaction Mitigation Procedure).

1.10.5.7 Overall Stability Evaluation

The foundation designer shall evaluate the overall stability of the approach fills leading up to the bridge and all other unstable ground conditions, such as landslides or rockslides, that may affect the structure. This analysis shall include both static and dynamic analysis of slope stability as related to the service and extreme limit state designs. This analysis is to determine potential impacts to the bridge and approach

fills which may result from embankment instability, landslide movements, settlement or other potential ground movements. A thorough geotechnical investigation, focused on slope instability, should be conducted in accordance with the ODOT Geotechnical Design Manual (GDM). Methods for evaluating overall stability and for estimating settlements and displacements are also described in the GDM. The overall stability analysis should include both non liquefiable and liquefiable foundation soil conditions as appropriate. This evaluation should be completed as early as possibly in the design process to allow for possible changes in location and/or modifications to the bridge design to accommodate slope instability conditions. Coordinate with the foundation designer to resolve any slope instability issues that will affect the final bridge design.

For the Service Limit State, the overall stability of bridge approach fills not supporting abutment spread footings should provide a minimum factor of safety of 1.3, (roughly equivalent to a resistance factor of 0.75). A factor of safety of 1.5 against overall stability should be provided for end bent spread footings supported directly on embankments or bridge retaining walls. For bridges that are located in landslide areas, or in areas that could be affected by slide movements, the slide should be stabilized to the same factors of safety as stated above for approach fills or as determined by the region Tech Center Office and Bridge Headquarters.

For Extreme Limit State I (seismic loading) conditions, the overall stability and displacement of the approach fills should be evaluated. In addition, other potentially unstable ground conditions, such as landslides or rockfalls, should also be investigated and evaluated for their potential impacts on the structure due to earthquake forces. A minimum factor of safety of 1.1 should be provided for the pseudo static analysis of bridge approach fills, landslides and any other potentially unstable ground conditions that may affect the structure. This criterion applies to sites with or without liquefiable foundation soils. In addition to this requirement, ground displacements (lateral and vertical) should be estimated and evaluated in terms of meeting the seismic design performance criteria described in *BDDM 1.17.1*. This performance criterion also applies to liquefiable or non-liquefiable foundation soil conditions. The Newmark approach is recommended for estimating the lateral displacements of approach fills, adjacent slopes, landslide masses or other ground features that may affect the structure. Other methods for estimating lateral ground deformations under seismic loading are presented in the ODOT Geotechnical Design Manual. If estimated ground displacements result in excessive deformation or damage to the bridge such that the performance criteria cannot be met, then mitigation measures should be pursued. The limits of liquefaction mitigation described in *BDDM 1.17.4* also apply to all non-liquefiable soil conditions that require mitigation measures to meet the specified performance criteria.

1.11 SUBSTRUCTURES

Outline:

1.11.1 Retaining Structures, General

1.11.2 End Bents

1.11.3 Interior Bents

1.11.1 Retaining Structures, General

Retaining walls that support bridge bents will typically be designed by the structure designer, and drawings will be the same size and included with the structure drawings.

For all other free-standing retaining walls, refer to the ODOT Geotechnical Design Manual, *Chapter 15*.

1.11.2 End Bents

1.11.2.1 Determining Bridge Length

Options for the end bent in relation to the end fill intersection with the finish grade include:

- Option A, no wingwalls, but a longer structure than for options B and C.
- Option B, the structure length is shorter, but short wingwalls to retain the fill.
- Option C, the structure length is shorter yet, but longer wingwalls and a taller abutment wall to retain the fill.

Generally, option B will provide the least cost, especially for prestressed slab spans. For option C, larger longitudinal forces from lateral soil loads must be resisted by the superstructure and substructure.

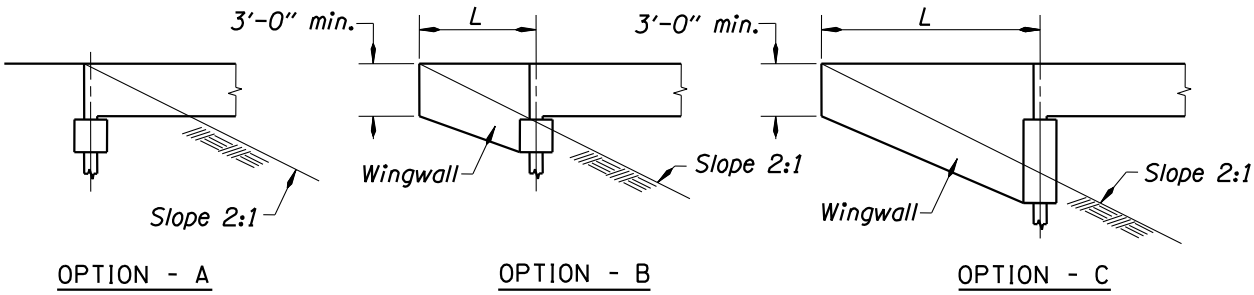

Figure 1.11.2.1

1.11.2.2 Wingwall Location

Wingwalls for end bents may be located as follows:

- Walls parallel to the structure are used for filled or "false" (unfilled) bents. These are generally used for grade separation structures where the face of the bent is quite a distance back from the toe of the slope under the structure.

- Walls parallel to bridge bents are generally avoided due to safety or stream flow considerations.

- Walls at an angle to both structure and lower roadway or stream. The angle is generally half the angle between the structure and the lower roadway or stream center lines, as this usually leads to a minimum length wall. The end of the wall is determined by plotting final contours off the upper and lower profile lines. The point where the contours of equal elevation intersect determines the location of the end of the wall.

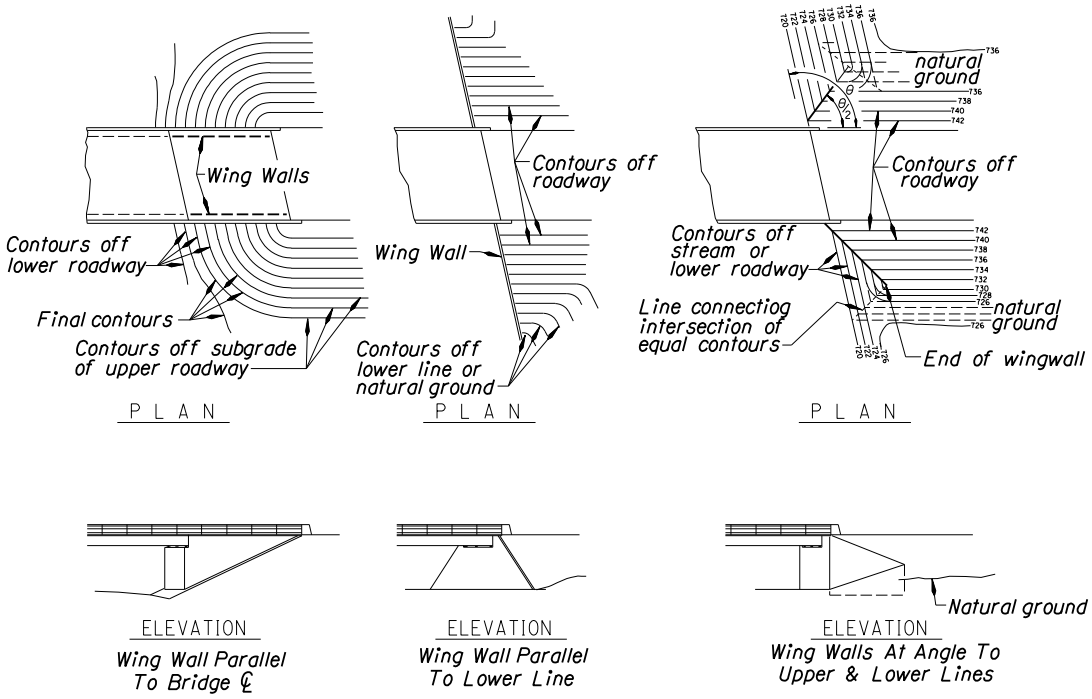

Figure 1.11.2.2

1.11.2.3 Wingwall Design and Construction

For cantilever wingwalls on abutments with relatively stiff footings (footing width is at least 3 times abutment wall thickness), the horizontal reinforcement in the fill face of the abutment wall resisting the moment caused by earth pressure on the wingwall need not extend farther from the wingwall-abutment juncture than the following:

For the top 2/3 of the abutment wall height	1.5H
For the bottom 1/3 of the abutment wall height	0.75H

Where abutment walls with wingwalls are designed with thickened tops for bearing seats or backwalls, those thickened portions should be designed to carry 1/2 to 2/3 of the bending moment in the upper half of the abutment wall. Reinforcing between the abutment wall and the wingwall should extend beyond the juncture enough to develop the strength of the bar reinforcement.

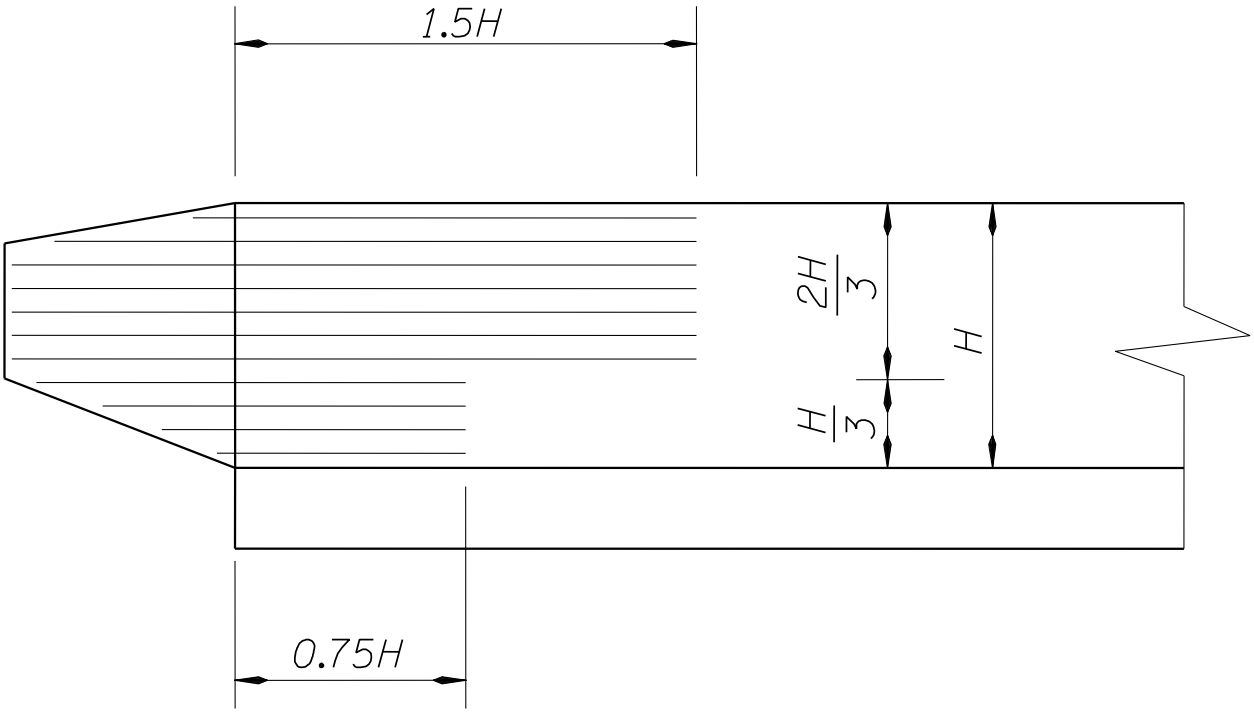

Figure 1.11.2.3A

Construction

When wingwalls are cantilevered from an abutment or pilecap, the Designer should consider all stages of construction. If the abutment or pilecap would be unstable or overstressed under the dead load of the wingwalls before the superstructure and/or backfill are placed, the "Bent Construction Sequence" on the plans should require that the concrete in the wingwalls not be placed until the superstructure and/or backfill are in place. Do not count on there being soil under the wingwall unless the wall has its own footing.

The height of the wingwall at the outer end of the wall should be a minimum of 3 feet. The slope of the bottom of the wall should be a maximum of 2:1.

The Special Provisions and detail drawings should require that the embankment fill be placed to the elevation of the bottom of the wall before the wingwalls are constructed. In other words, bridge end bent wingwalls shall be cast against undisturbed material or well compacted backfill. The designer may want to use some discretion in this matter. A 24 foot wall would normally always need to be constructed on compacted fill, while a 6' wall could be constructed and backfilled at later time.

For walls shorter than about 8 feet, the bottom of the wall can be formed level, at the discretion of the Designer or at the contractor's option. This adds some cost in materials, which may be offset by cost savings from easier construction. Potential benefits:

- Wingwalls are founded on level ground, no sloped or elevated bottom forms are required
- Adds stability to abutment
- Helps contain approach embankment at stream crossings if primary scour protection fails

Due to concerns about stability and the potential for migrating of fresh concrete over the top of wingwall forms, the slope of the top of a wingwall should not exceed the maximum slope of the adjacent embankment nor 1.5:1 without a special stability investigation.

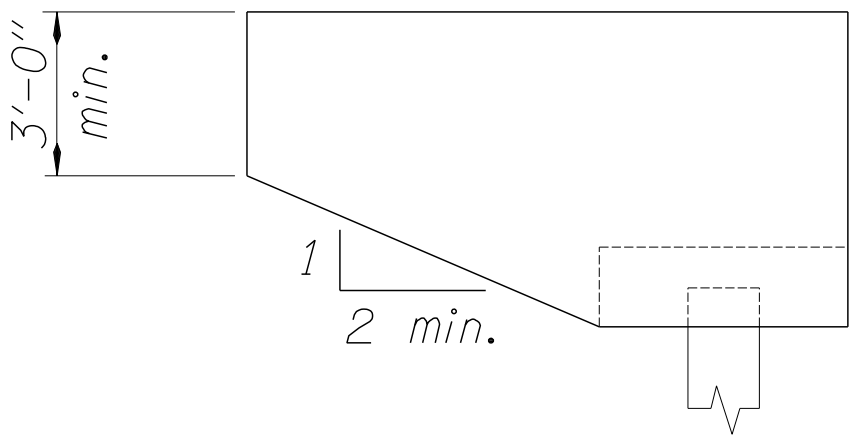

Figure 1.11.2.3B

1.11.2.4 End Bents

General

Where end bents or retaining walls are located adjacent to roadway construction, locate the top of footings at or below the elevation of the bottom of the roadway subgrade. In other locations, the top of the footing should generally be a minimum of 1 foot below the surface of the ground. The effect of items such as utilities, ditches and future widening should also be considered.

Terminology

In this section and elsewhere in the BDDM, the terms “end bent” and “abutment” are used interchangeably. “Integral Abutment” is the industry standard term used to describe abutments that provide a continuous connection between the superstructure and the substructure”. However, for consistency on ODOT bridge drawings, all bridge support locations are referred to as “bents”. Refer to the glossary in the Appendix for definitions of the terms “Abutment”, “Bent” and “Pier”. A possible exception could include the rehabilitation of an existing bridge, where the original plans called out “abutments” (or “piers”, etc.) and it would be less

confusing to keep the same terminology as the existing plans.

Design

For end bents supported on piles, consider the lateral load of the bridge end fill in designing the bent. It is desirable to minimize the height of the bent to reduce the amount of lateral load that must be resisted by the end bent. However, increases in height to mobilize the passive soil pressure for seismic resistance may be necessary.

Provide access for inspection of bearings, shear lugs and backwalls for semi-integral abutments and access inspection for backwalls of integral abutment per *BDDM 3.19.2*.

Bents on MSE. Walls

Refer to the ODOT Geotechnical Design Manual, *Chapter 15*. All MSE abutment walls and wing walls shall have a concrete facing.

Integral Abutments

Use integral abutments wherever site conditions and structure geometry are suitable for such structures and the conditions and criteria described in this section are met. In integral abutments, expansion joints and bearings are eliminated and the superstructure is fully integral with the abutment. This results in numerous potential benefits including:

- Greater structure redundancy
- Simplified construction
- Reduced construction cost and time
- Reduced maintenance cost
- Stiffer longitudinal response at abutments

For a continuous bridge with expansion end bent connections, the interior bents take all of the longitudinal and transverse force effects. By using integral abutments in place of the expansion end bent connections, some of the longitudinal and transverse forces are distributed into the integral abutment (piles and backfill soils), thereby reducing the net forces on the interior bents. Integral abutments can reduce the longitudinal and transverse force effect considerably in a continuous bridge as compared to a bridge with expansion joints at the abutments.

Use integral abutments under the following conditions:

1. When the end bent is founded on steel pipe piles or H-piles. Do not place integral abutment foundations on top of, or through, MSE retaining wall reinforced backfill. For all other foundation types, see guidelines for semi-integral abutments.

2. When bed rock is a minimum of 12 feet from the bottom of the pile cap. Avoid using pre bored piles when bed rock is close to the surface, since this type of construction has been uneconomical.

3. When there is negligible potential of abutment settlement which does not affect the serviceability of the bridge.

4. When the radius of horizontal curvature is greater than 1200 feet.

5. When the skew angle is less than 30 degrees.

6. When, for all service limit states, movement at the top of integral abutment piles does not exceed ±1.5 inches from the undeflected position. The corresponding range of pile movement is therefore 3.0 inches if the superstructure is made integral with the piles at the mean annual temperature.

Design Guidelines for Integral Abutments:

1. Use a U-shaped abutment (wingwalls parallel to roadway alignment) if possible.

2. Use H-pile with strong axis in the direction of temperature movement. See *Figure 1.11.2.4A*.

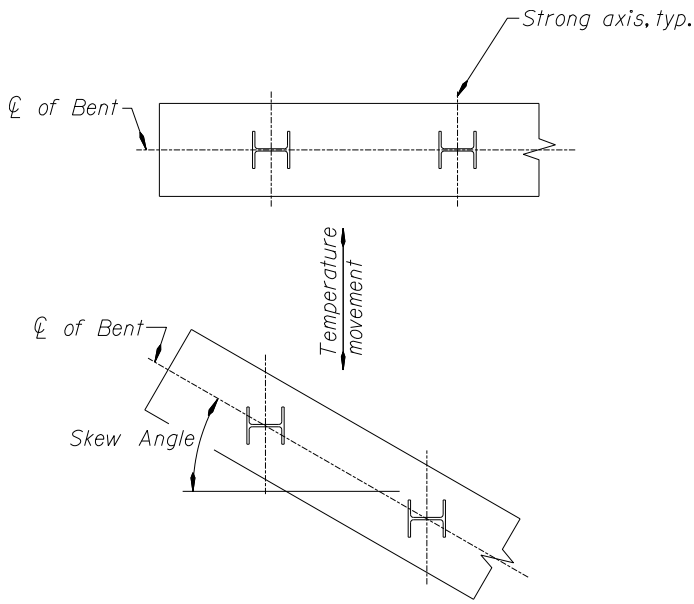

Figure 1.11.2.4A

3. Embed piles into the pile cap to develop moment fixity. See *BDDM 1.10.5.4* Piling Details (1)

4. Preboring may be necessary in some cases where pile design stresses are excessive due to thermal movements and cannot be accommodated without special foundation design and construction. The cost of preboring for the piles should be compared to the benefits gained by using an integral abutment design. Increasing the number of piles or the use of larger piles in the abutment may decrease individual pile stresses to acceptable limits. If preboring is required, and cost effective, then consider preboring an oversized hole. The prebore dimensions should be at least 4 inches or more in diameter larger than the diagonal dimension of the pile and large enough to accommodate the estimated pile deflection. Backfill the area around the pile with loose sand conforming to the current *SP 00360.10* or as recommended by the Geotechnical Designer. Do not compact the sand backfill material. Bentonite or pea gravel backfill are not recommended since they may not provide for the long term flexibility required of the pile and soil system. The depth of prebore should be 10 feet or more or as required to provide the required pile flexibility to decrease pile stresses to an acceptable limit.

5. Detail piles of integral abutments to resist uplift force from temperature differential between top and bottom of the pilecap. Refer to *Figure 1.10.5.4.E* for pile anchorage details.

6. The design of integral abutment bridges with a grade change between abutments should consider both vertical and horizontal components of bridge longitudinal loads such as uniform temperature

changes, creep, shrinkage, braking, seismic, and lateral earth pressure, on the resulting axial and flexural stresses in the piles.

7. Develop a COM624 or LPILE model using the full pile for soil and pile interaction. Evaluate pile deflections, bending moments and stresses using the LPile or COM624 computer program analysis.

8. At the service limit state, H-pile flange yielding at each flange tip should not exceed 5 percent of the total flange area. See *Figure 1.11.2.4B*. For steel pipe piles no yielding of section is permitted.

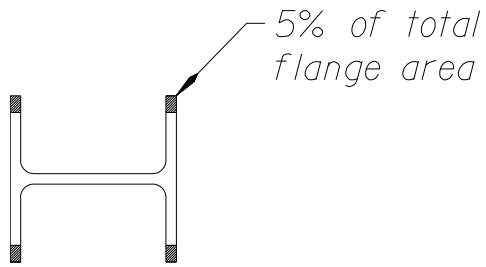

Figure 1.11.2.4B

9. Consider the relative stiffness of the superstructure, substructure and any asymmetric span lengths in calculating end bent movement. Consider the potential for unequal thermal movements at end bents (integral abutments) due to asymmetric span lengths or changes in substructure stiffness.

10. Consider torsion in components connected to integral abutments.

11. Consider the combination of worst case events (except seismic) with temperature rise and fall.

12. Specify placement and compaction requirements and an increased frequency of field density test requirements of the backfill material (minimum of two tests per stage of construction at each end bent) to achieve consistent soil stiffness behind both end bents.

13. Consider the friction force between the bottom of the impact panel and structure back fill (expansion and contraction) in the superstructure design at the service limit state. Assume a friction coefficient of 0.54 unless specific measures are taken to reduce friction.

14. Connect superstructure and end bents with a closure pour. Require a minimum of three days wait period between concrete deck placement and closure pour to release shrinkage stress in bridges with steel superstructures and include long term creep in your design for concrete superstructures. Include a note which requires backfill behind the abutment after closure pour.

15. Where the range of abutment movement is 1 inch or less, the end panel may be fixed to the superstructure and thermal movements accounted for by providing a saw cut in the approach pavement at the end of the end panel. Where the range of abutment movement exceeds 1 inch, provide an expansion joint between the end panel and the deck so the end panel is not dragged back and forth with thermal expansion and contraction. See *Figure 1.11.2.4C*.

16. In integral abutment bridge staged construction, a continuous abutment is capable of transferring traffic live load vibrations in one stage to the girders and the deck that are under construction in

another stage. These vibrations can damage fresh concrete in the deck. To minimize these vibrations, provide an expansion joint or closure segment in the integral abutment located between the stages of construction.

17. Specify deck casting sequences and deck closure pours at integral abutment connections and specify the range of temperature when the contractor may place the concrete on the plans and in the special provisions. Keep the range of temperature in the closure pour to not adversely affect the pile stress during temperature fall or rise.

18. See design example in the following publication of the American Iron and Steel Institute HIGHWAY STRUCTURES DESIGN HANDBOOK, Vol. II Chapter 5, “Integral Abutments For Steel Bridges", prepared for the National Steel Bridge Alliance by Tennessee DOT.

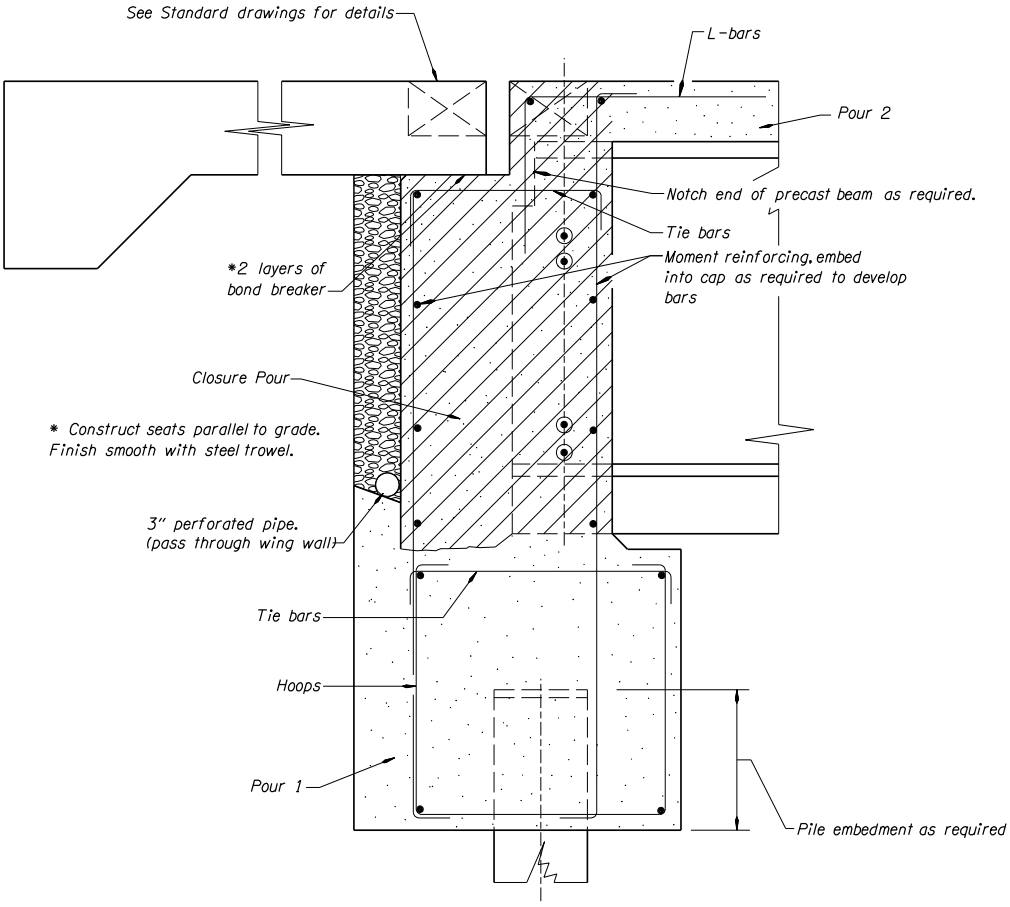

Figure 1.11.2.4C

Semi-Integral Abutments

Recommendations for integral abutments also apply to semi-integral abutments, except as noted in this subsection.

Consider the use of semi-integral abutments, rather than integral abutments, on foundations that are stiff in the longitudinal direction, such as spread footings, drilled shafts, and concrete piles. These foundations

do not provide the required flexibility in the longitudinal direction required for integral abutments. Also consider semi-integral abutments, rather than integral abutments, when the abutment is founded on top of or passes through MSE retaining wall reinforced backfill.

Two points that need to be evaluated on semi-integral abutments (especially on skewed bridges) are torsional forces affecting the bearings, and the effectiveness of shear keys used. If geometry requires a stiff footing, this type of construction is recommended.

For skewed bridges, consider the load path from thermal forces to the substructure. Skewed semi-integral abutments may rotate (finish condition).

1.11.2.5 Strutted Abutments

Abutments of single span bridges with the superstructure in place before backfilling may be designed using the strutting action to resist earth pressure overturning. For such abutments, apply soil pressure based on an at-rest or neutral condition of the soil. Footings for these abutments are not required to satisfy the "uniform bearing" under the dead load requirement. Investigate the bridge for the case of backfill being washed out behind one abutment. For this case, active soil pressures with no live load surcharge shall be used on the opposite abutment. A factor of safety against overturning of the whole structure of 1.25 will be considered adequate, and 125 percent of the allowable bearing pressure will be acceptable.

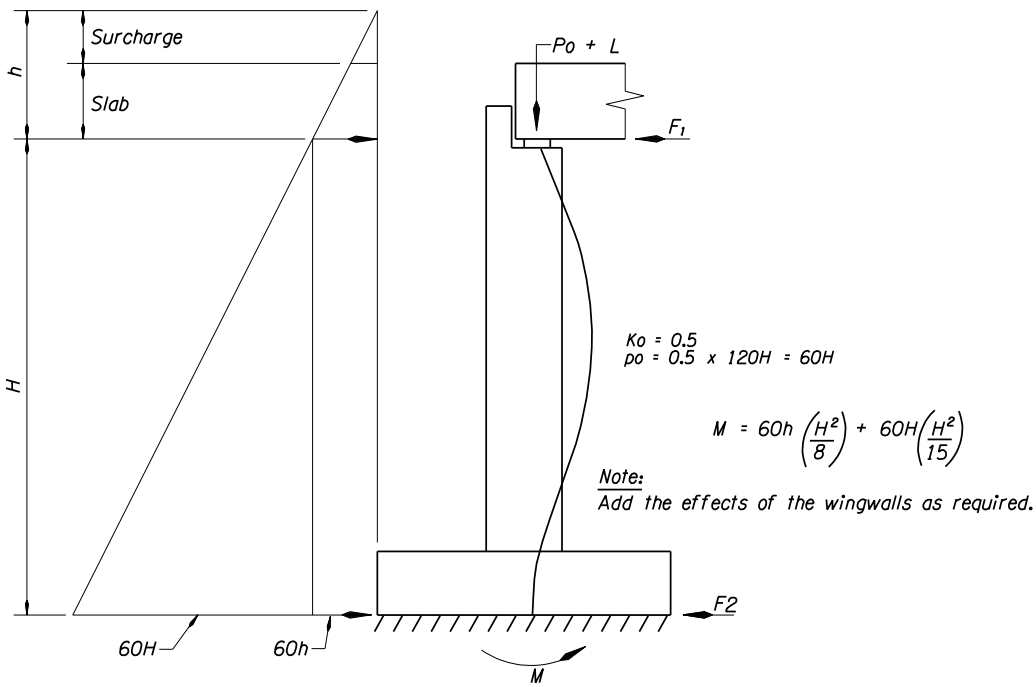

Figure 1.11.2.5A

1.11.2.6 Pile Cap Abutment Details

Pile Cap Elevations - Show the bottom of the pile cap elevations on the pile cap “Elevation” view. If the pile cap is sloped, show the elevation at each end.

Fixed (Integral) action – Double row of reinforcing bars provides the connection between superstructure and substructure. Shear and moment are transferred. Pile embedment to develop fixity is required, if the number and size of piles are selected to resist a specified load.

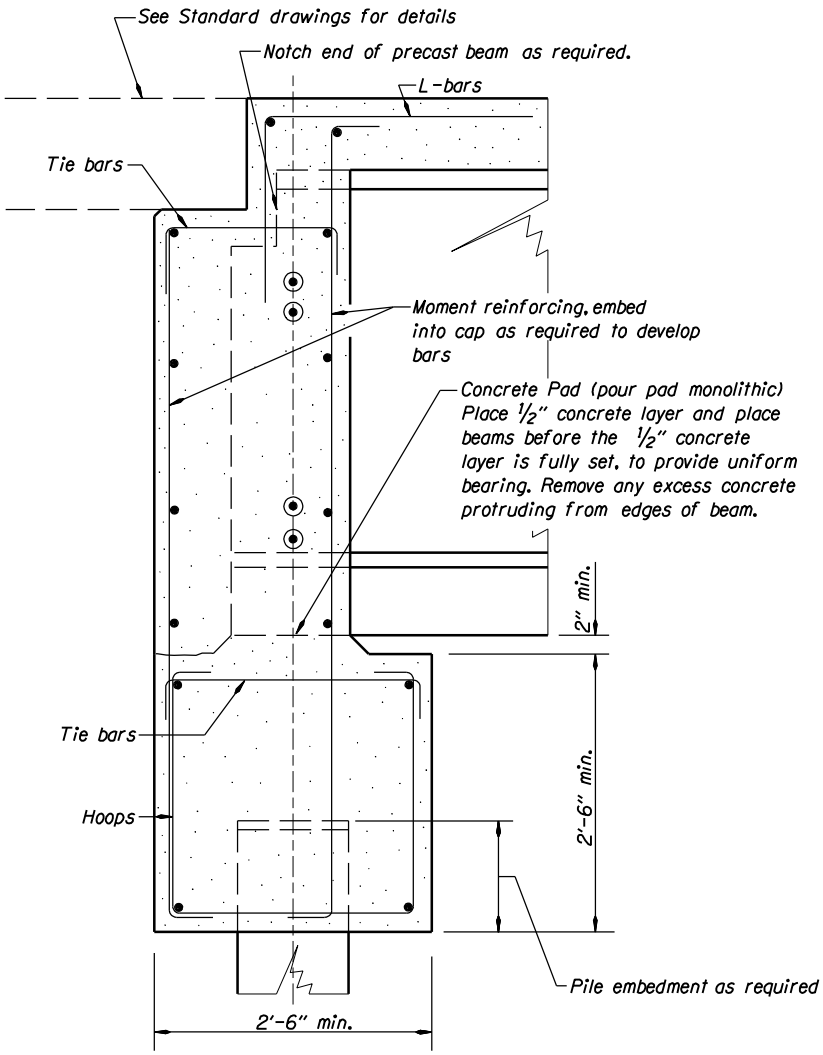

Figure 1.11.2.6A

Fixed (Integral) action with elastomeric bearing pads – This option allows the use of a 1/2 inch elastomeric bearing pad to be placed on top of the concrete grout pad. The precast beam can then be placed on top of the pad prior to the placement of the full width backwall. The beam should be placed just after a wet 1/2 inch grout layer has been placed under the bearing pad as specified in *BDDM 1.14.1.6*. A double row of reinforcing bars provides the connection between superstructure and substructure. Shear and moment are transferred. Pile embedment to develop fixity is required, if the number and size of piles are selected to resist a specified load.

A reinforced concrete pad is required to resist temporary bearing loads. Hand placement of grout under the bottom flange of the beam may be required to fill the 2-1/2 inch gap.

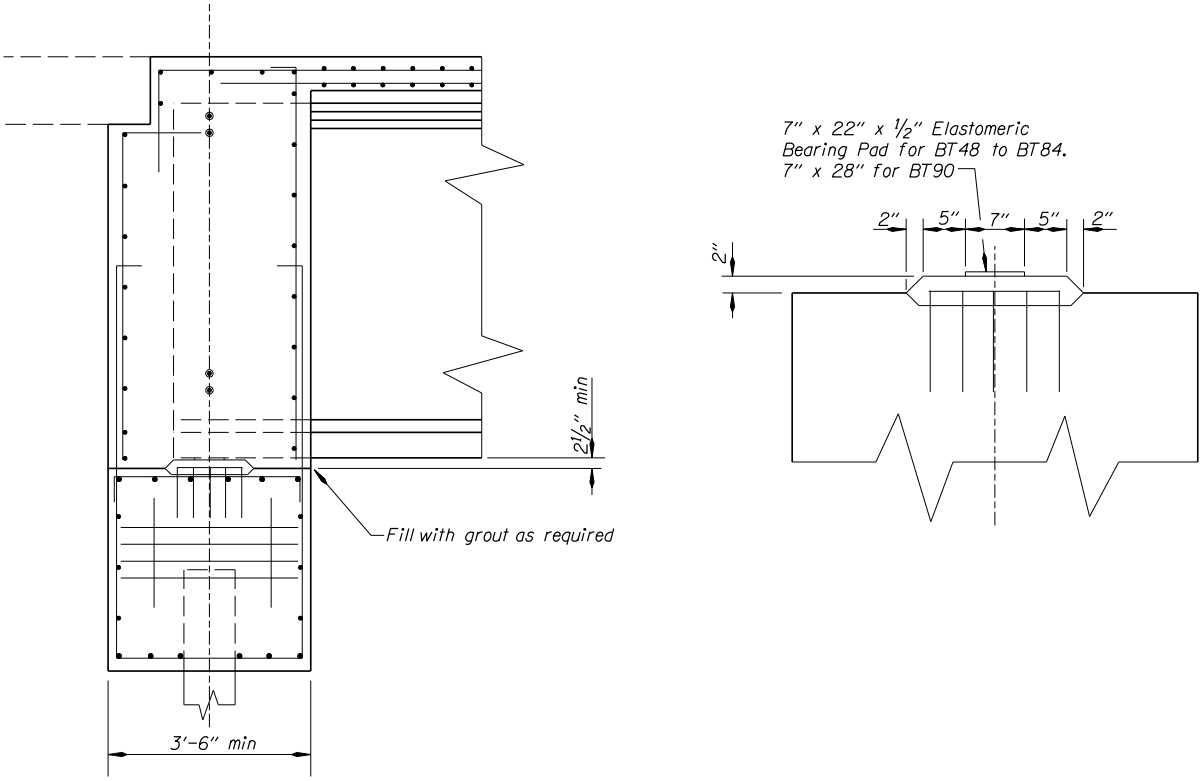

Figure 1.11.2.6B

The performance of the 1/2 inch bearing pad under the vertical load and rotation resulting from deck load and diaphragm load was evaluated according to *LRFD 14.7.6.3.5b* for BT48 to BT90 girders. For BT48 to BT84 girders, a 7" x 22" pad is required. For BT90 girders, a 7" x 28" pad is required. Beam weight was not included in the end rotation calculations because the wet grout layer placed below the elastomeric pad at the time of beam placement eliminates any rotation of the pad due to beam end rotation from beam dead load.

Expansion allowed (nominal amount of movement) – No reinforcement is provided between the superstructure and substructure. This type is appropriate when nominal movement is expected on a non-yielding type of foundation.

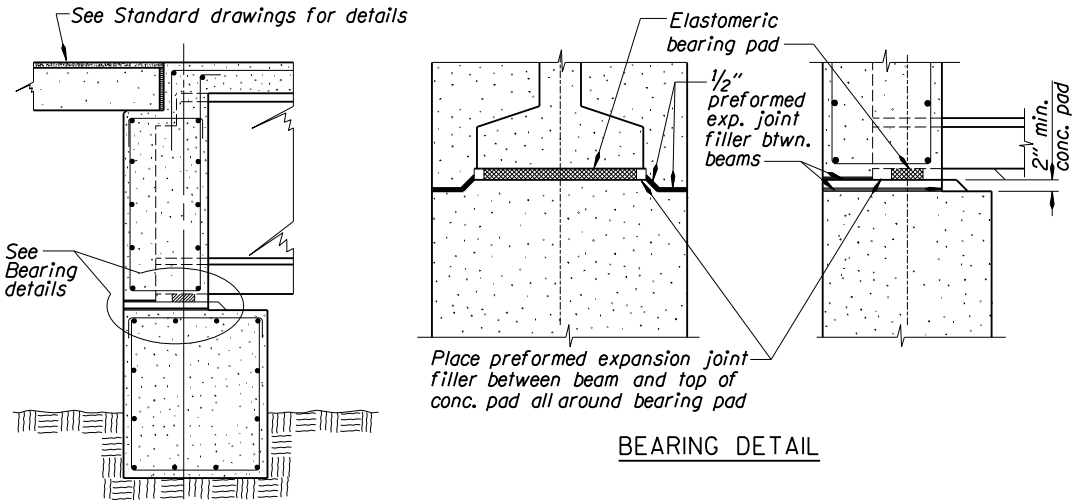

Figure 1.11.2.6C

Expansion allowed (movement allowed as required) - No reinforcement is provided between the superstructure and substructure. This type is appropriate when movement needs to be accommodated in the design. Various types of bearings and joints can be used for the movement required.

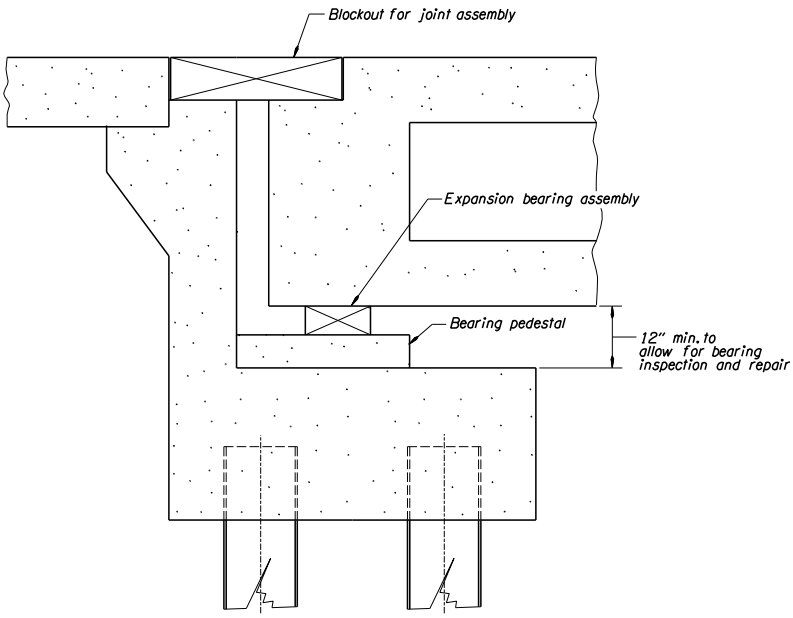

Figure 1.11.2.6D

1.11.2.7 Abutment Details for Prestressed Slabs

See *BDDM Appendix 1.11* for Prestressed Slab End Bent Design/Detail Sheets for more details.

Shallow Abutments (Pile Cap) – Precast Slab or Box

Most common and most economical type of end bent. It requires the least amount of excavation and cast-in-place concrete.

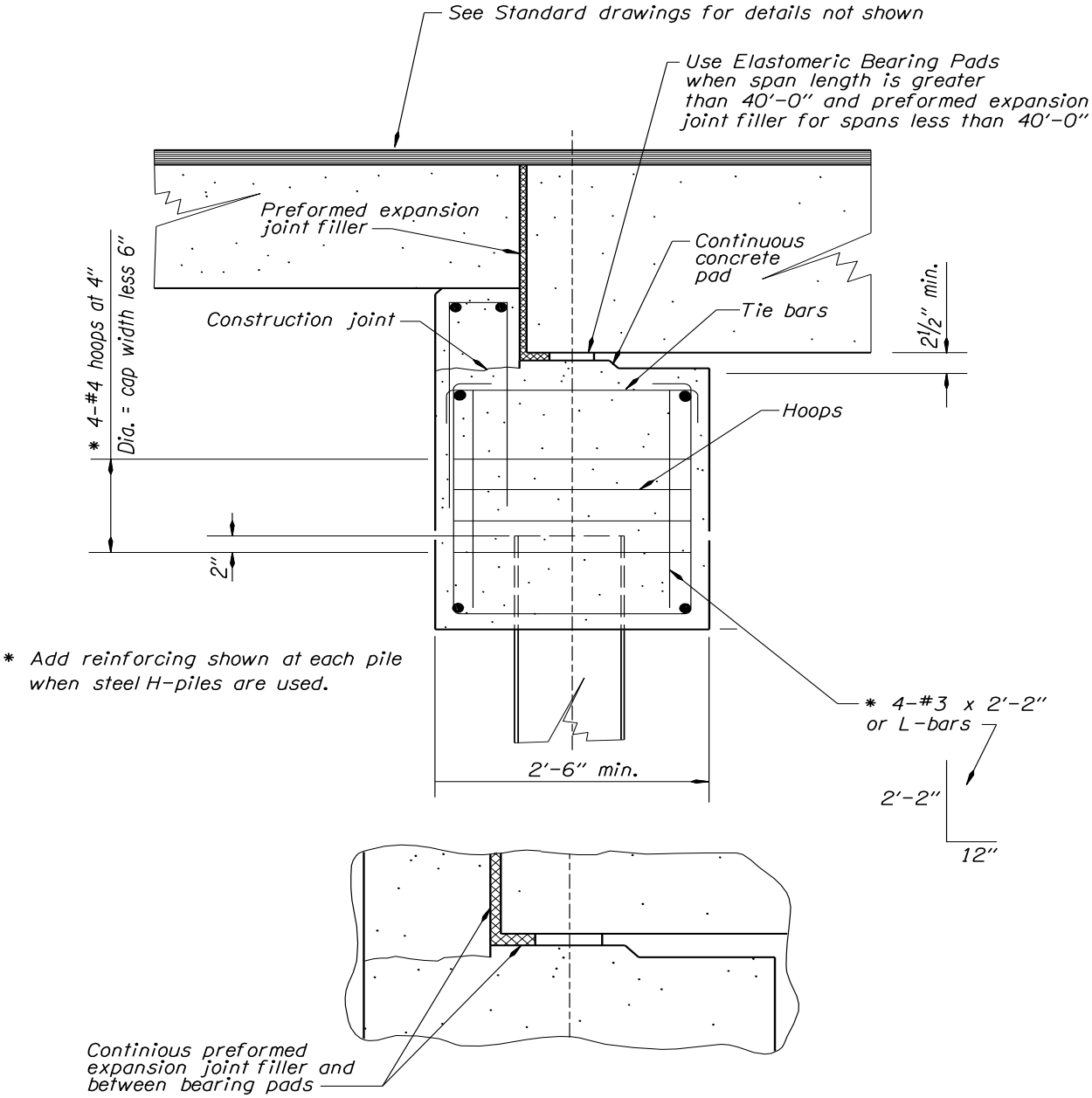

Figure 1.11.2.7A

Partial Depth Abutment – Precast Slab or Box

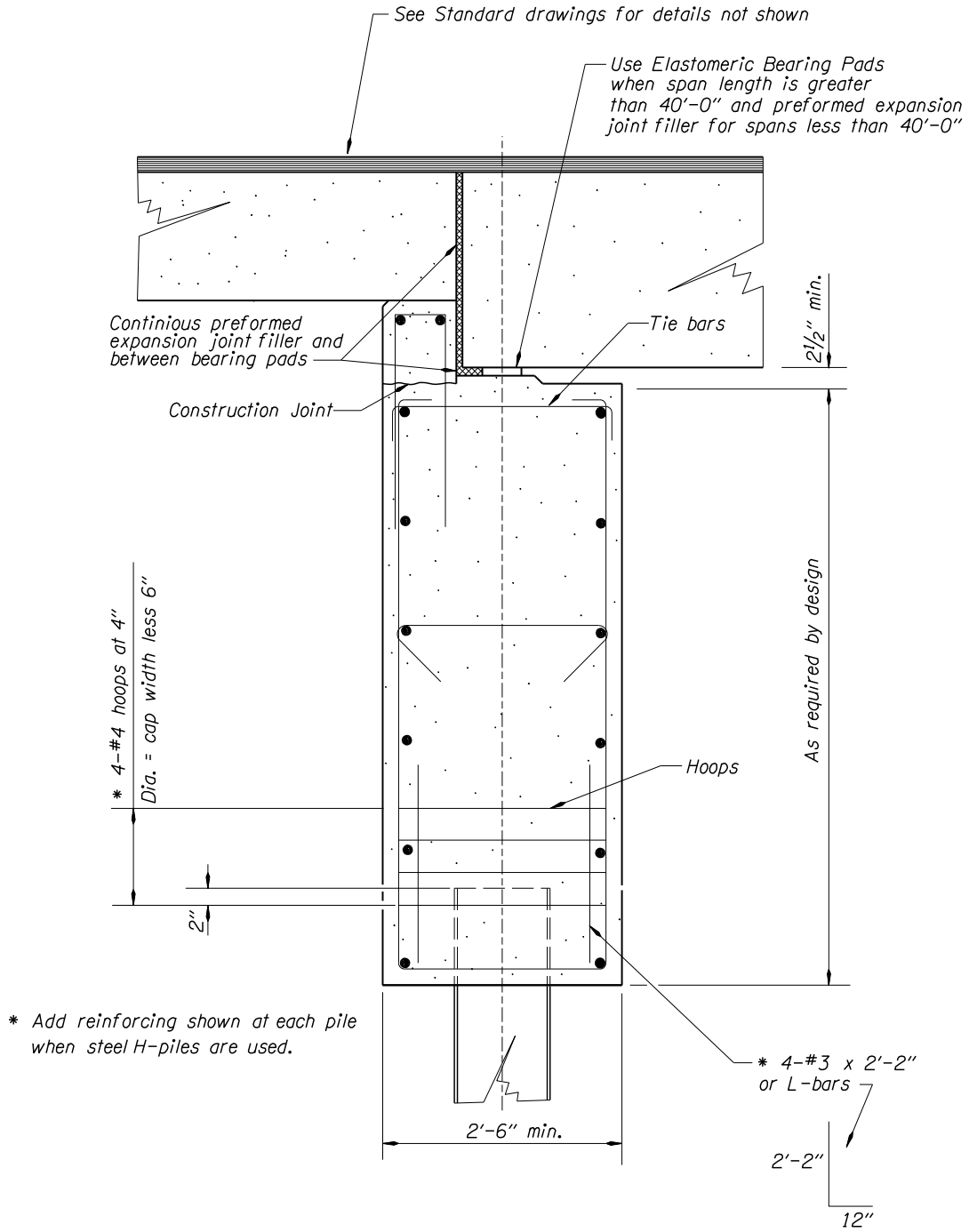

Figure 1.11.2.7B

1.11.2.8 Forming of Backwalls for End Beams

Details should be developed that will allow the removal of forming materials. Forming materials, including expanded polystyrene must be removed. Forming material is normally not yielding and can cause cracking as the structure expands and contracts.

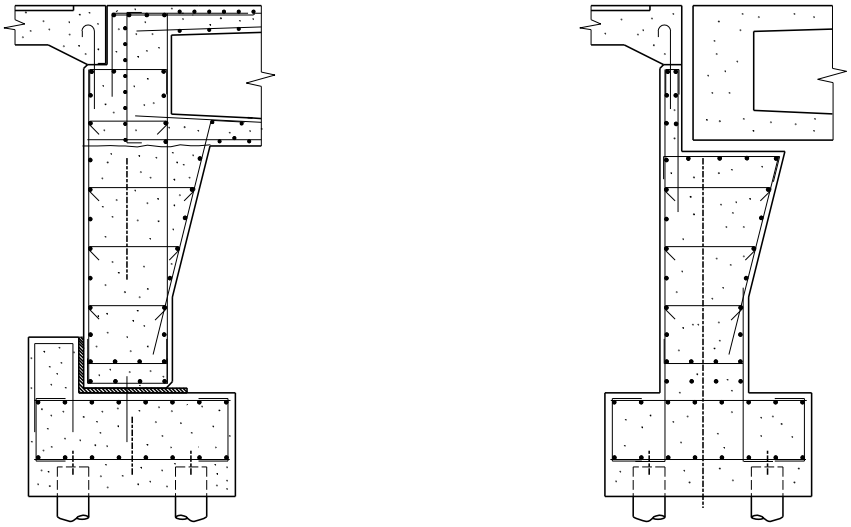

Figure 1.11.2.8A

1.11.2.9 Bent Joint Details

Provide an open joint between the abutment and the deck-and-girder section, as shown below. Note on the plans of post-tensioned structures that if expanded polystyrene is used to form the joint, it must be removed before tensioning.

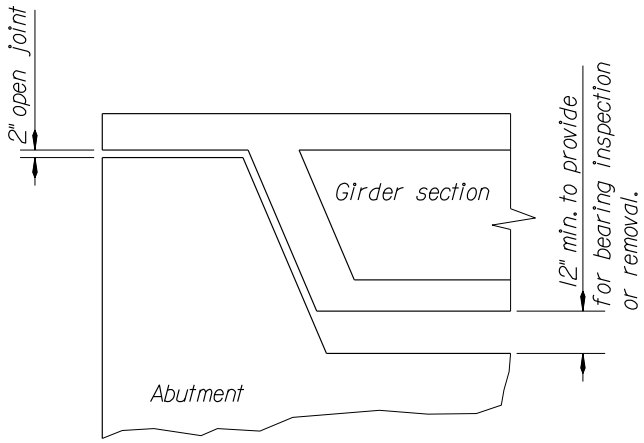

Figure 1.11.2.9A

1.11.2.10 Backwall Reinforcement for Post-tensioned Structures

When detailing the vertical reinforcement for the backwalls of abutments for post-tensioned spans, the Designer should take into account the location of the post-tensioning anchorages. Spacing of bars and/or splicing details should be such that the vertical bars do not have to be bent out of the way for the post-tensioning operation and bent back to their final positions.

1.11.2.11 Beam Seat Drainage

Slope the beam seats of abutments to drain away from the front face. Provide scuppers through the bearing pedestals and backwall or drain pipes at low points to pick up any water that might leak into this area.

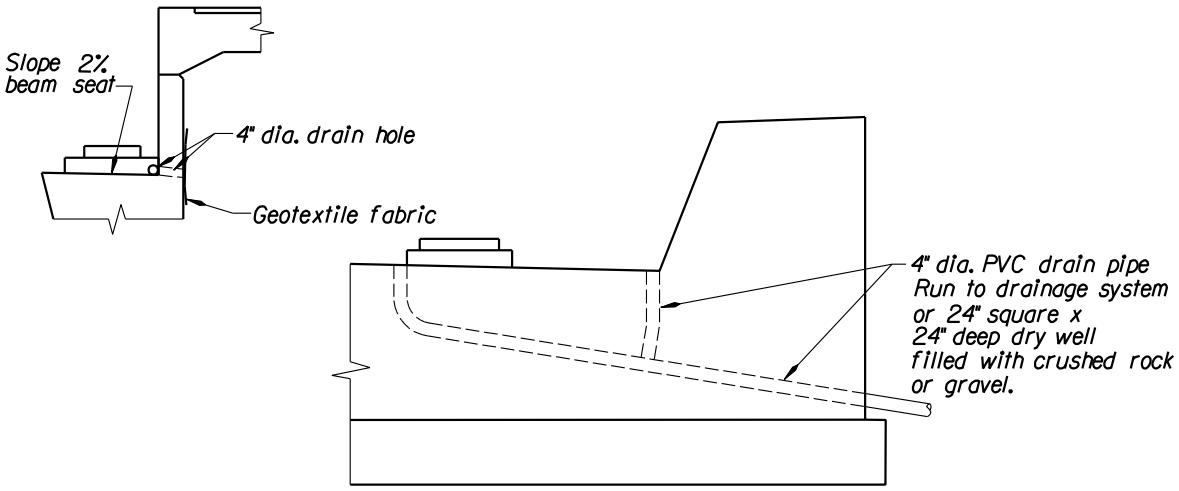

Figure 1.11.2.11A

1.11.2.12 Reinforced Concrete End Panels

See BDDM 1.23 for end panel requirement criteria. All bridges shall be detailed with paving ledges or other provisions so that present or future reinforced concrete end panels can be supported. Structures with sidewalks shall be detailed with a ledge or other provision to support an approaching concrete walk (present or future) if there is no approach slab in the walk area. When reinforced concrete end panels are required, show them on the bridge plans and include them in the bridge quantity estimate. In most cases, the bridge rail should be extended to the end of the end panel.

1.11.2.13 Bent Width Provisions with Precast Units

All pile caps, crossbeams, abutments, etc. supporting adjacent precast units (such as slabs, boxes, integral bulb-T's, etc.) should be detailed for the total width of all units with an additional width of a minimum of 1/2 inch per precast unit. This is required because unit fit-up is not exactly true and "growth" in width occurs. The 6 inch minimum closure pour on each side of the exterior units at abutments as shown on End Bent Detail drawing may be used for adjustment due to these misfits. The 6 inch dimension may be increased where necessary for wider roadways.

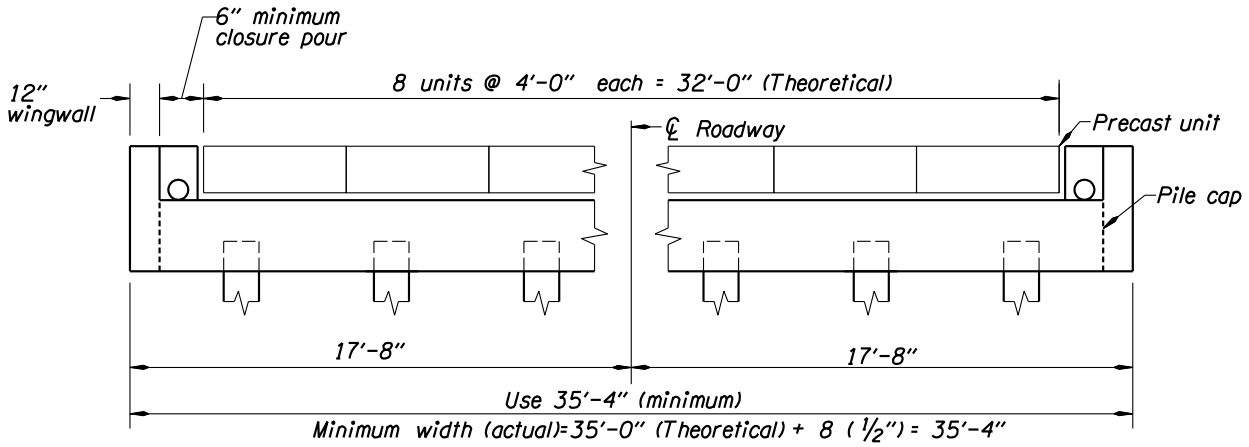

Figure 1.11.2.13A

1.11.3 Interior Bents

1.11.3.1 Interior Bents, Design and Detailing

Design

Design structure for stability under all stages of construction. The following conditions, in particular, should be checked:

1. Stream flow and wind load w/o superstructure.
2. Dead load of one or more girders plus wind load and stream flow. Note: Contractor is responsible for stability of girder itself.
3. Lateral system must be sufficient to insure stability of girders under wind load without deck.
4. Top flanges must have sufficient support not to buckle under dead load of (fluid) concrete without the aid of deck forms.

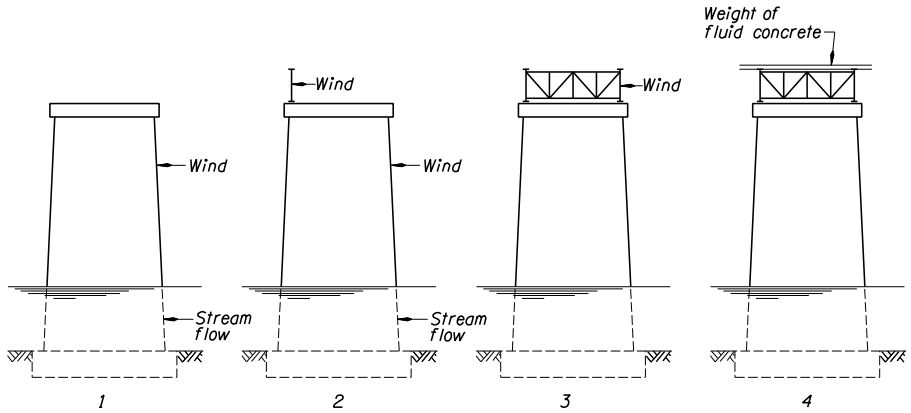

Figure 1.11.3.1A

Effective Span Length

When computing the maximum negative moment for a crossbeam on a column or pier, the crossbeam may be considered to be supported by a concentrated reaction, the following distance inside the face of the column or pier:

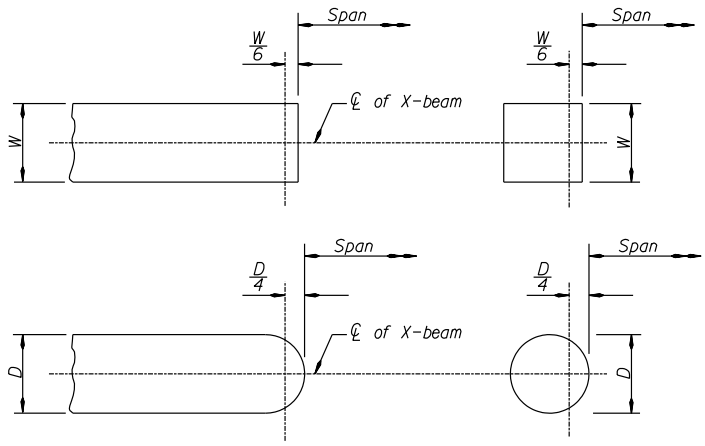

Figure 1.11.3.1B

Detailing

Provide all dimensions and details necessary for the reinforcing steel fabricator and contractor to construct it.

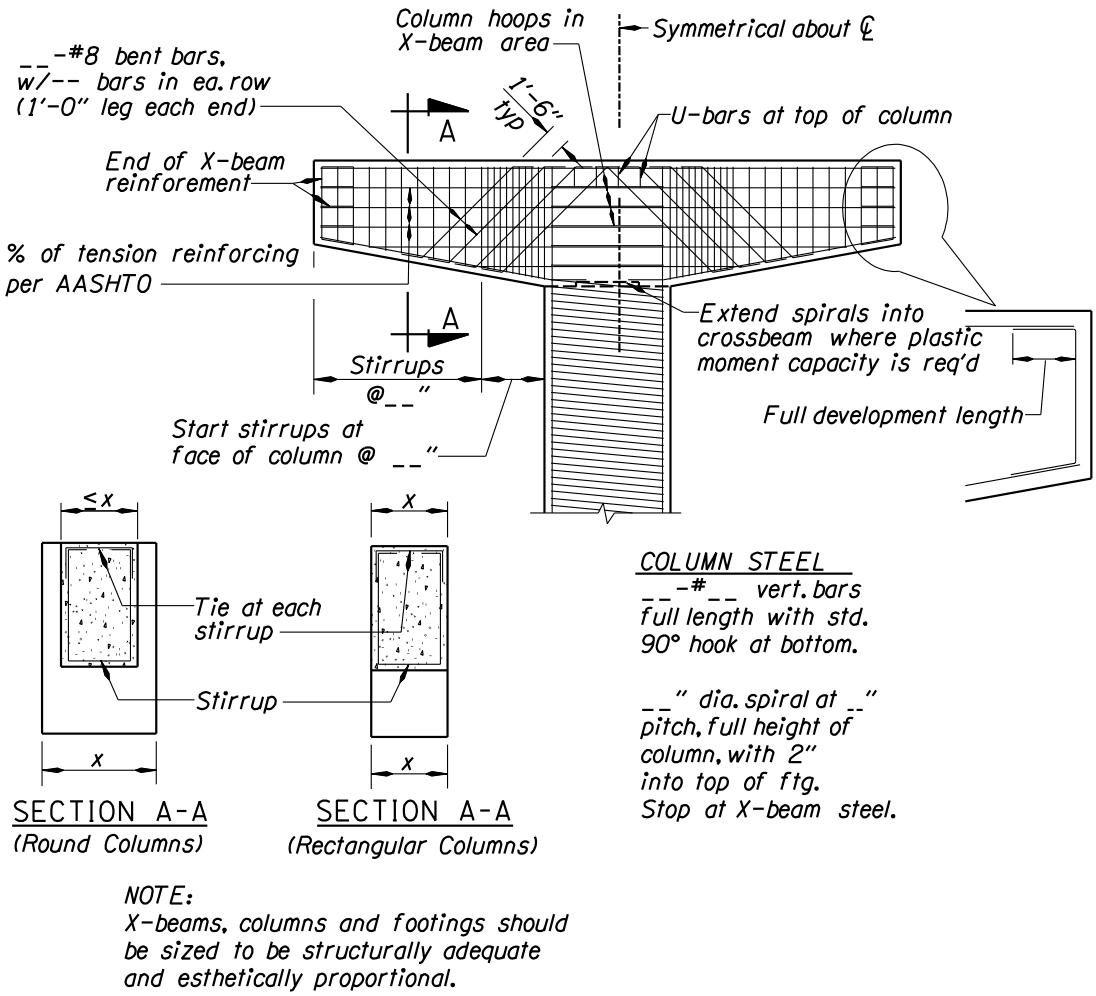

Figure 1.11.3.1C

See *BDDM 1.11.3.5* and *BDDM 1.11.3.6* for details of column reinforcing.

1.11.3.2 Interior Bent Details for Prestressed Slabs

- See *BDDM Appendix 1.11* for Prestressed Slab Interior Bent Design/Detail Sheets.

1.11.3.3 Structure Widenings, Interior Bents

Generally, connections between structure bents should be detailed to tie the structures together, but prevent dead load and concrete shrinkage loads from being transferred to existing bents.

Example details are shown below and on the following pages.

The method below allows the new x-beam to deflect during the construction loadings with minor load transfer to the existing crossbeam.

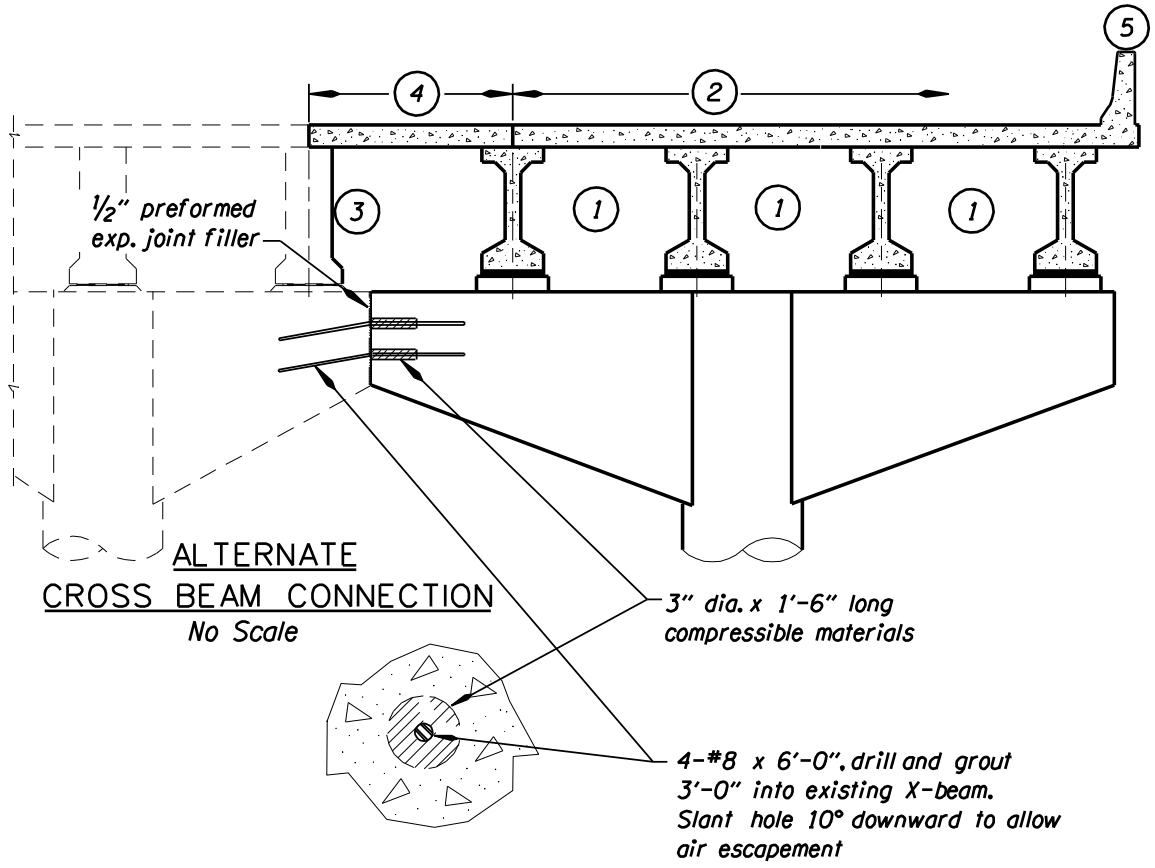

POUR SCHEDULE
(INCLUDING CLOSURE POUR)

1. Make pour in end beams and diaphragms
2. Make pour in deck slab. Delay pour 2 a min. of 3 days after pour 1. A transverse deck construction joint may be made at any diaphragm beam. Delay pouring adjacent deck sections a minimum of 36 hours.
3. Make pour in end beams and diaphragm of closure pour section.
4. Make pour in deck slab of closure pour. Delay a minimum of 3 days after pour 3.
5. Make pour in bridge rail.

Fig. 1.11.3.3A

The method below allows the widening construction to be completed before the connecting bars are grouted and able to transfer loading from the new crossbeam to the existing crossbeam.

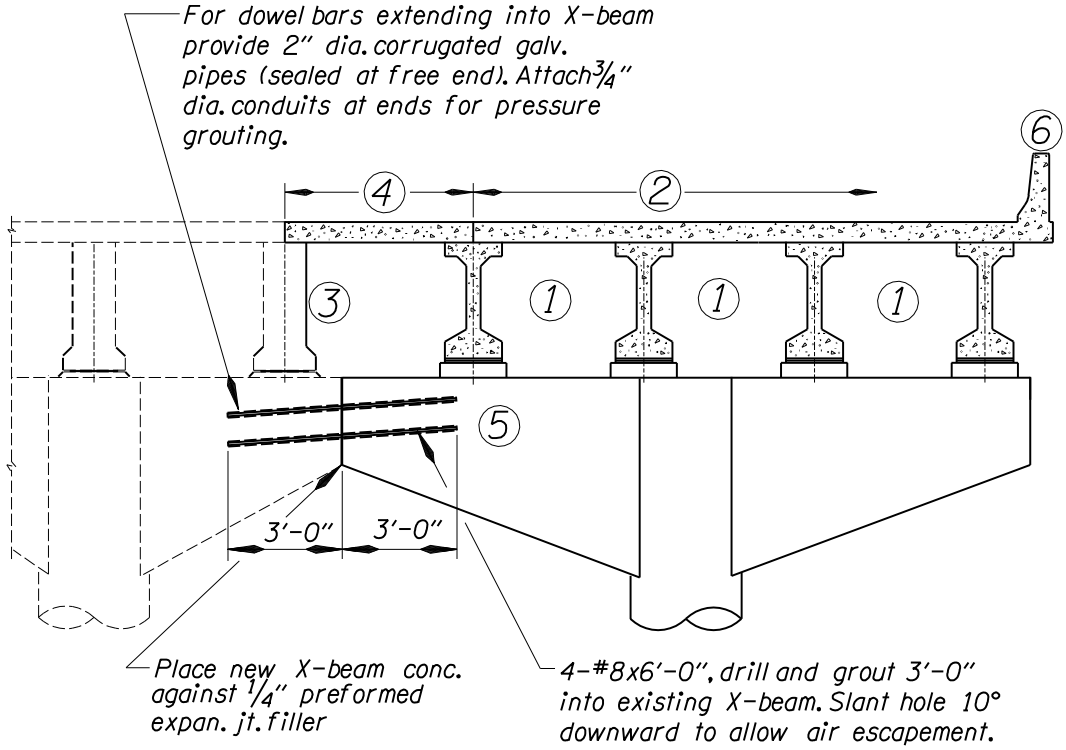

CROSS BEAM CONNECTION AND
CLOSURE POUR DETAIL

No Scale

POUR SCHEDULE
(INCLUDING CLOSURE POUR)

1. Make pour in end beams and diaphragms
2. Make pour in deck slab. Delay pour 2 a min. of 3 days after pour 1. A transverse deck construction joint may be made at any diaphram beam. Delay pouring adjacent deck sections a minimum of 36 hours.
3. Make pour in end beams and diaphragm of closure pour section.
4. Make pour in deck slab of closure pour. Delay a minimum of 3 days after pour 3.
5. Pressure grout dowels in cross beam.
6. Make pour in bridge rail.

Figure 1.11.3.3B

1.11.3.4 Columns in Slopes

Special attention should be given to situations where new fill could exert lateral pressure against bents other than the end bents. Such situations may require special construction sequence notes and/or special footing design including battered piling.

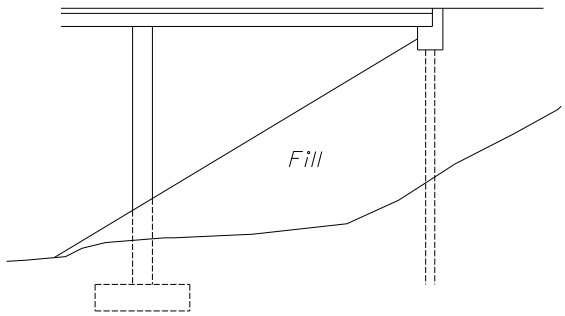

Figure 1.11.3.4A

1.11.3.5 Column Design, General

See *BDDM Appendix 1.2* for column loading criteria for vehicular impact, depending on type and location of barrier used (ODOT Instructions for LRFD 3.6.5).

For both tied and spiral columns, ensure adequate space for man access for tying and inspection.

Multiple interlocking spirals are the preferred choice for non-circular columns. Use 0.75 spiral diameters as the maximum center-to-center spacing of spirals. In this way, the smaller column dimension will dictate the larger column dimension. Closer center-to-center spacing of spirals is possible but would reduce the access space for tying and inspection. At least 4 vertical bars must be placed within the spiral overlap area. A photo log from FHWA is available showing how multiple spirals have been constructed.

Corners will normally be filleted or rounded. Using rectangular corners would normally require nominal corner vertical bars with ties developed within the core area. Such ties would interfere with bar tying and inspection. Therefore, design corners to be considered "expendable" in an earthquake, by detailing the rebar so that it is not developed within the core.

Bundled bars should only be oriented tangentially (both bars touching the spiral). Multiple concentric rings of bars are not a constructible option with multiple interlocking spirals, but may be used in detailing of circular columns.

Apply *LRFD equations (5.7.4.6-1, 5.10.11.4.1d-1, 5.10.11.4.1d-2 and 5.10.11.4.1d-3)* using volumes for a single spiral, using a theoretical minimum-cover column with 2 inches of cover to determine gross area in these equations. The maximum spiral yield strength to be used in determining spiral spacing is 60 ksi. The heavier spiral confinement requirements for plastic hinge areas do not apply to tops of columns that are pinned.

Where columns are supported by drilled shafts, use a non-contact splice as shown in *Figures 1.10.5.5A or 1.10.5.5B*. Ensure column diameter is less than shaft diameter according to *BDDM 1.10.5.5(1)*. Provide confinement reinforcement meeting the requirements in *LRFD 5.10.11.4.1d* for column segments extending into drilled shaft as shown in *Figures 1.10.5.5A and 1.10.5.5B*.

Specify ASTM A 706 reinforcement for vertical column bars when columns are supported on drilled shafts or when plastic hinging is anticipated in either the top or bottom of the column.

Specify 3/4 inch maximum aggregate size in footings, columns and crossbeams. To maintain the shape of the spirals, use a maximum vertical bar spacing of 8 inches.

Containing an 8 inch diameter drain pipe within the column and taking it out between spread bars at the bottom is not an option since confinement requirements would be violated.

1.11.3.6 Spiral Reinforcing

Use spiral reinforcing for all columns. For column designs not controlled by seismic loading, spirals shall extend from a minimum 2 inches below the top of the footing to the bottom of the steel in the cross beam or longitudinal beam.

Where plastic moment capacity is required between column-to-crossbeam connections, extend the spirals into the crossbeam to the top crossbeam steel.

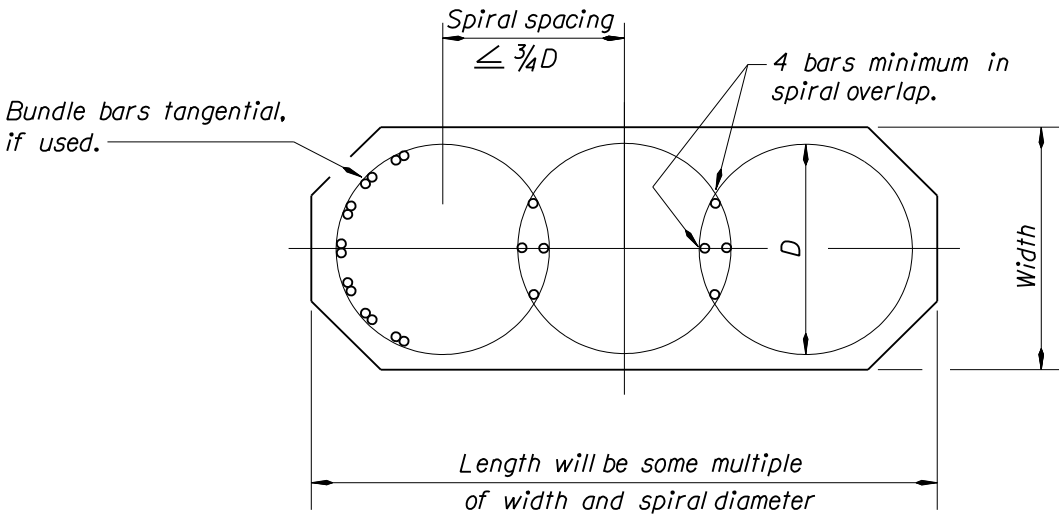

Figure 1.11.3.6A

The following notes apply to the specification above and are for designer information only:

- Deformed bars (ASTM A 615 Grade 60, or ASTM A 706) can be specified in sizes from #3 through #6.
- A496 is included in the list. It is difficult to obtain now but, with the increased use of spiral columns, it may possibly become more available in the future.
- A706 is formulated to be weldable so submission of chemical analysis is unnecessary. It is also preferred because it is the most ductile.
- A82 cannot be mechanically spliced because it lacks deformations. It is available only in sizes 5/8 inch diameter or less.

- ASTM A 82 and A 615 Grade 60 bars are available in coils. Average A 82 bar coils have a weight of approximately 1500 pound, and A 615 deformed bar coils have a weight of 3000 pound to 4500 pound, depending on the size of the bar.

- For ease of handling, spirals are generally fabricated without splicing in weights up to a maximum of 200 pound per piece for diameters 8 feet and under.

- Coated spiral bars are fabricated using ASTM A 706 bars. Stock lengths are generally 40 feet to 60 feet. Bars are spliced using the weld lap splice method. Maximum shipping mass is 200 pound for ease of handling and protection of the coating.

- Approved mechanical fasteners may be used provided the full strength of the bar is developed.

- Use of lapped splices should be avoided because of the 80d lap requirement and because hooks into the core will inhibit access for tying and inspection. Use of lapped splices is not permitted for spirals less than 3'-4" diameter.

- The plans should state the type of spiral reinforcement used in computing reinforcing quantities. Normally the Designer should assume A 706 with welded splices.

Standard spiral splice and termination details are shown below.

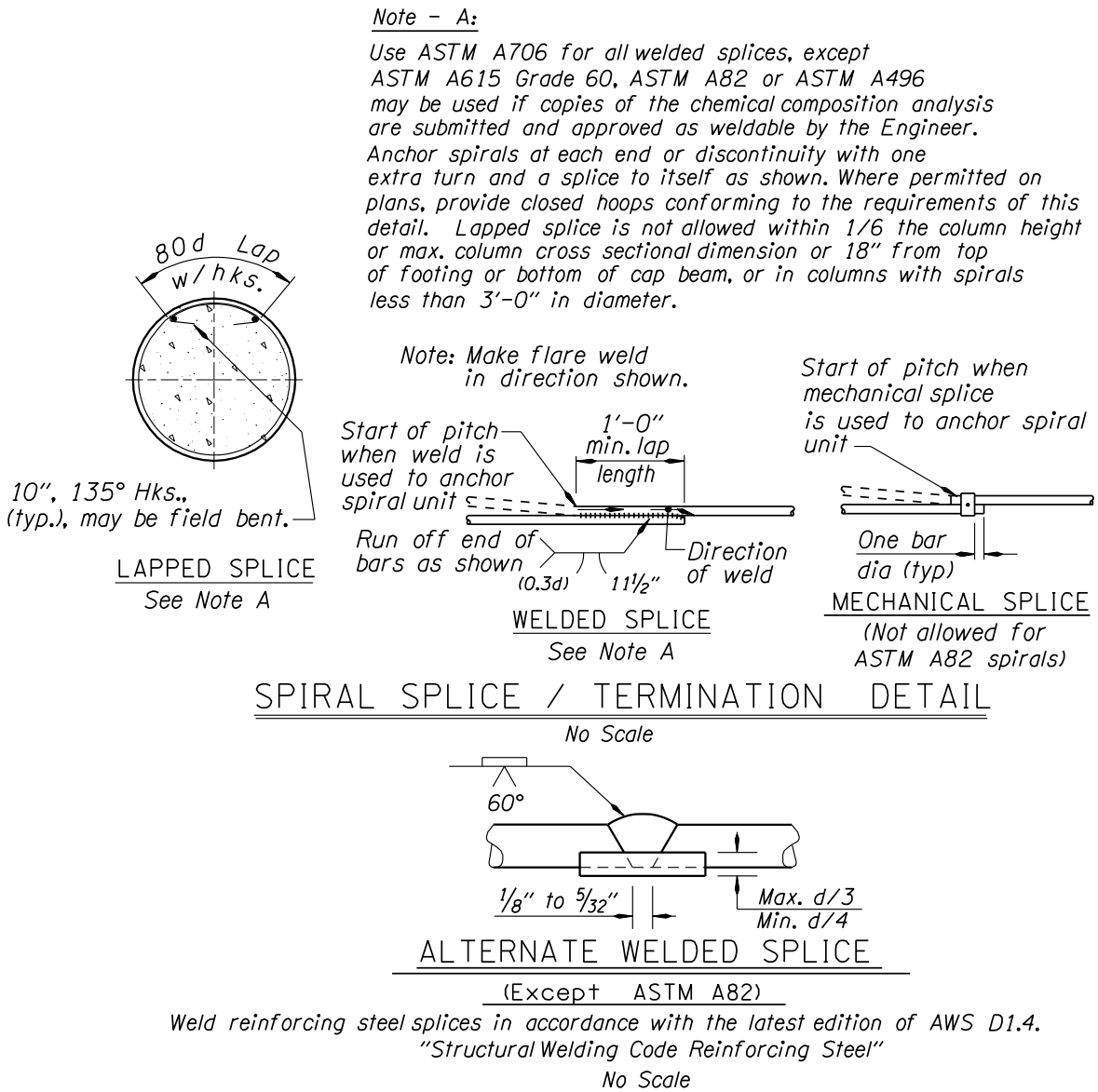

Figure 1.11.3.6B

1.11.3.7 Column Steel Clearance in Footings

Column steel hooks are placed on top of the footing mat to avoid the need for threading footing steel through the column steel cage.

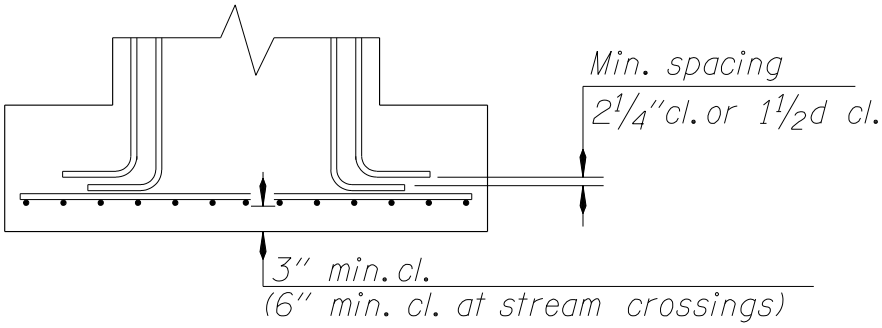

Figure 1.11.3.7A

1.11.3.8 Column Hoops

Due to seismic requirements, use hoops and ties only to supplement spiral reinforcement for architecturally shaped columns to provide some confinement to concrete that is "expendable" in a major seismic event. Terminate these supplemental hoops and ties without the normal extension (hooks) into the interior mass of the column concrete. Because these architectural features are expendable and are not considered in the analysis and design we want to allow their failure. They should be detailed so they do not add undesired stiffness and strength.

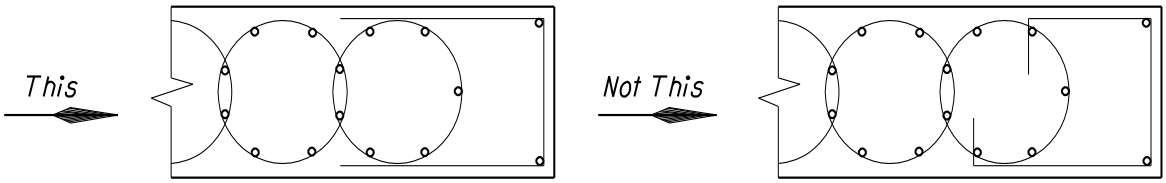

Figure 1.11.3.8A

1.11.3.9 Vertical Bar Splices

Do not splice vertical column bars for columns less than 30 feet in length (no footing dowels). For longer columns, splices may be made as shown below in the middle 1/2 (preferably at mid-height) of the column (outside the plastic moment areas).

The development requirements may require 180 degree hooks of the column verticals in the cap beam. Pay attention to how the column verticals, extended spirals, bottom cap beam bars, and post-tensioning ducts all fit together.

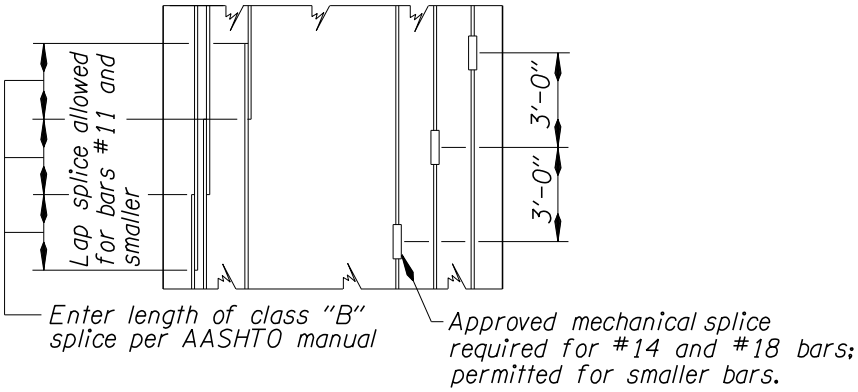

Figure 1.11.3.9A

1.11.3.10 Optional Hoop Detail at Bottom of Column

The detail below will facilitate more effective concrete placement in the core area of the footing. The 6 inch gap is used to facilitate placement of the top mat of reinforcement.

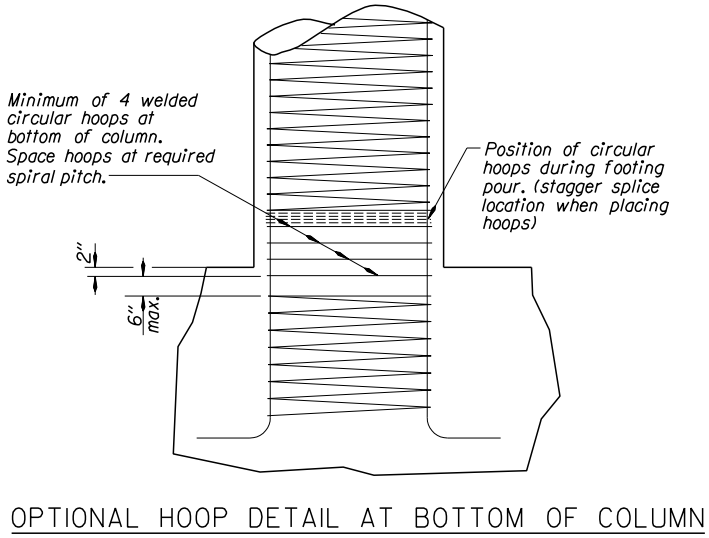

Figure 1.11.3.10A

1.11.3.11 Footing Reinforcing

Provide a mat of reinforcing steel (minimum of #5 bars at 12 inch centers each way) in the top of all footings. If calculated loads require larger amounts of reinforcement, the latter controls. Also provide U-bars at 12 inch centers around the periphery of the footing.

Extend spirals at least two inches into the footing. Place the footing top mat immediately below the spiral termination. Place additional spirals below the mat (use a 6 inch spiral gap) down to the vertical bar's point of tangency. Use the same spiral pitch at all locations.

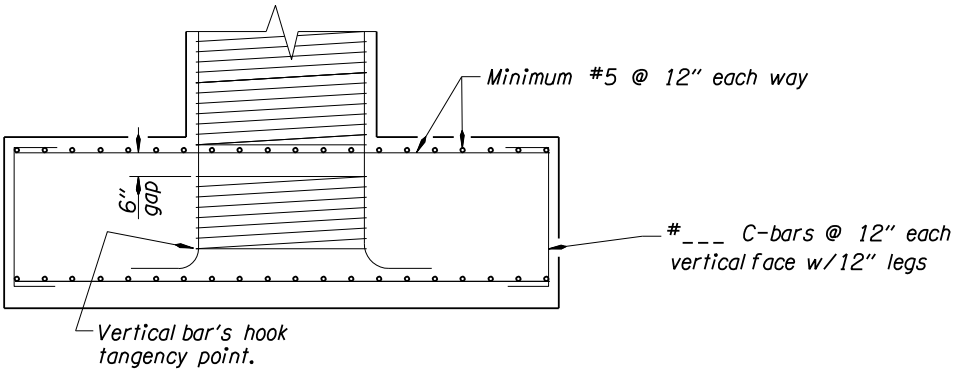

Figure 1.11.3.11A

1.11.3.12 Sloped Footings

General criteria for sloped footing tops are:

- The required footing thickness adjacent to the column should be at least 4'-6". (No minimum edge thickness is specified except as required for shear.)
- The amount of concrete saved should be at least 10 cy.
- The top may be sloped either two ways or four ways, but should not be steeper than 2:1.
- A horizontal area should be provided 6 inches to 12 inches wide outside the base of the column to facilitate forming the column.

1.12 BURIED STRUCTURES

Outline:

1.12.1 Culvert Design, General

1.12.2 Tunnels (structural elements)

1.12.1 Culvert Design, General

Concrete culverts, metal pipe culverts and pipe arches will typically be designed or administered by the Region Tech Centers. Large culverts (diameter or span 6 feet or greater) are processed like bridges. Request a structure number, drawing number(s), etc. for large culverts. A single culvert span, or out-to-out sum of closely spaced culvert spans, of 20 feet or more is defined as a “bridge” and is included in the National Bridge Inventory (NBI). Refer to the ODOT Highway Design Manual and Hydraulics Manual for additional guidance.

1.12.2 Tunnels (structural elements)

(Reserved for future use)

1.13 RAILS, IMPACT ATTENUATORS, AND PROTECTIVE SCREENING

Outline:

1.13.1 Bridge Rail

1.13.2 Impact Attenuators or Crash Cushions

1.13.3 Protective Screening

1.13.1 Bridge Rail

1.13.1.1 Rail Selection

1.13.1.1.1 Rail Selection, General

For new and widening projects, use *Section 13* of the current AASHTO LRFD Bridge Design Specifications for guidance to determine the required bridge rail. Also, the structure designer should work with the project team to select the best rail for a given site, considering roadway geometry, traffic volume, speed, truck traffic, accident history, sight distance, occupant risk, aesthetics, maintenance, inspection and related factors.

- Rails should be crash-tested to confirm the rail is structurally adequate and the vehicle trajectory after collision is acceptable (see "Note A" following the footnotes for the Standard Rail Table).

Since August of 1998, the FHWA requires all rails used on Federally funded NHS-route projects to meet the testing requirements in NHRCP Report 350 for TEST LEVEL 3 (TL-3) or higher.

The following are the current bridge rail standards:

Drawing No.	Description	Crash Tested	Performance Level / Test Level	App. FA Proj.
BR200	Concrete Bridge Rail, Type F	Yes	PL-2 (TL-4)	Yes
BR203	Transition to Conc. Br. Rail Type F	Yes(1)	TL-4	Yes
BR206	Two-Tube Curb Mount Rail	Yes	PL-2 (TL-4)	Yes
BR207	Transition to Two- Tube Rail	Yes(1)	TL-4	Yes
BR208	Three-Tube Curb Mount Rail	Yes	PL-2 (TL-4)	Yes
BR209	Transition to Three-Tube Rail	Yes(1)	TL-4	Yes
BR212	Concrete Post and Beam Bridge Rail	Yes	TL-4	Yes
BR214	Concrete Parapet with Steel Post	Yes	TL-4	Yes
BR216	Sidewalk Mounted Combination Rail	Yes	PL-2 (TL-4)	Yes
BR220	Flush Mounted Combination Rail	Yes	PL-2 (TL-4)	Yes
BR221	32" Vertical Concrete Parapet	Yes	PL-2 (TL-4)	Yes
BR226	Two-Tube Side Mount Rail	Yes	PL-2 (TL-4)	Yes
BR230	Two-Tube Side Mount Rail Transition	Yes(1)	TL-4	Yes
BR233	Thrie Beam Rail and Transition	Yes(3)	PL-1 (TL-2)	Yes
BR263	Median Barrier, Type F	No	PL-2 (TL-4)	Yes
BR266	Modified Type 2A Guardrail (5)	Yes	PL-1 (TL-2)	Yes
BR240, 241, 242	Protective Fencing	NA	NA	Yes
BR246	Pedestrian Rail	NA	NA	Yes
BR250	Pedestrian Rail on Sidewalk Mounted Concrete Parapet	No (7)	(PL-1)	(7)
BR253	Sidewalk Mounted Concrete Parapet w/Chain Link Fencing	No (7)	(PL-1)	(7)
BR256	Pedestrian Rail on Type F Concrete Bridge Rail	Yes(6)	PL-2 (TL-4)	Yes
BR260	Chain Link Fencing on Type F Concrete Bridge Rail	Yes(6)	PL-2 (TL-4)	Yes
BR270	Rail Transition Dtls. Flex Beam Rail Curb and Parapet Rail	Yes(6)	PL-2	Yes
BR273	Thrie-Beam Rail Retrofit for Curb and Parapet Rail	Yes(6)	PL-2 (TL-4)	Yes
BR290	Concrete Bridge Rail, Type-F Tall 42"	Yes	PL-3 (TL-5)	Yes
BR291	Transition 42" Bridge Rail to Guard Rail	Yes(1)	TL-4	Yes
None (8)	Texas 411 Aesthetic Concrete Baluster	Yes	PL-1 (TL-2)	Yes
None (8)	Texas C411 42" Concrete Baluster	Yes	PL-1 (TL-2)	Yes

Footnotes for Standard Rail Table:

(1) Similar to a transition that has been tested.

(3) A scaled-down version of the side-mounted rail was successfully crash-tested. ODOT's rail has FHWA approval because it was shown analytically to react as the crash tested version.

(5) This guardrail is intended for mounting on a concrete slab on top of RCBC when the fill height is less than the standard post embedment and when spanning the box is not possible (see *Figure 1.1.21.1A*).

(6) These combination rails were developed to be used next to a bike lane/shoulder combination. The concrete rail was tested without the pedestrian rail addition. Our judgment is that further testing is not warranted.

(7) These combination rails are different than what was crash-tested. A 24” vertical concrete parapet with a single horizontal steel rail on top was successfully crash-tested at the back of a curbed sidewalk. Although these combination rails are different, it is believed they will perform adequately. They may be used when the design speed is 35 mph or less (see "Note B" below). For design speeds greater than 35 mph, FHWA approval is on a case-by-case basis.

(8) ODOT does not have standard drawings for these rails. They are listed as an option for lower-speed installations (typically Local Agency or State bridges not on NHS routes) and may be used on a case-by-case basis. The Texas baluster rails are rated TL-2, which does not meet the minimum TL-3 requirement for NHS routes. The design engineer will have to generate and stamp the rail drawing.

Note A: Minor changes may be made to crash-tested rails in order to meet a specific need. Changes must maintain the rail's crash worthiness. New rails may be proposed for approval, which are based on similarity to an existing crash tested rail. Detail drawings, calculations and a narrative explanation are submitted to FHWA via ODOT. These submittals are typically forwarded out of state to FHWA rail specialists for review and possible analytic modeling. Changes may be suggested, or the design may be approved with minimal revision. Ample time should be allowed for the review process to assure that design approval will be granted without delaying the project schedule.

Note B: Rails need not be crash-tested when:

- Not on federal-aid projects, and
- Design speeds are 35 mph or less, and
- Rail is mounted on back of a raised sidewalk (5’ minimum width) with a barrier curb (8” minimum height), and
- Rail is structurally adequate based on loading conditions of AASHTO *Standard Specifications for Highway Bridges* Article 2.7 (i.e. 10 kips) or LRFD *Section 13*.

Note C: When design speeds exceeds 40 mph, provide a traffic rail at the traffic face of the sidewalk.

1.13.1.1.2 Vehicular Railing

- General – Consider maintenance and inspection needs when selecting a bridge rail. Personnel working near a 32” high rail are required to tie off for fall protection. Standard *BR200* Type-F rail has transverse holes for this purpose. A 42” high rail requires no tie off provisions.

- Standard Concrete Type "F" Bridge Rail - The Standard Type "F" rail is generally the best performing rail. It is generally used where there is high-speed, high-volume traffic, where the structure is on a curve and generally on all interstate and State highways. It should also be used between a sidewalk and traffic when the design speed is greater than 40 mph. Interference with sight distance from interchange ramps or crossroads should be checked. Avoid concrete rail in areas where drifting snow might create a problem. Tubular railing may be preferred in scenic areas where concrete rail would otherwise be indicated.

  Joints in Concrete Rails – See *Section 1.13.1.3*.

  Concrete bridge rails are usually constructed vertical or plumb and not normal or perpendicular to the deck. Joints and architectural treatments are also usually constructed or placed plumb.

- Two and Three Tube Curb Mounted Rails – These are a good performing rails that can be used instead of the Type "F" rail when "see-through" is desired. Even though these rails are acceptable in most applications, FHWA recommends (and we agree) the use of Type "F" rail on high speed and

limited access highways. It is better at redirecting errant vehicles and requires less maintenance. These tube rails currently have a TL-4 rating. Crash testing to qualify these rails to the TL-4 level was completed in 1998 for the Two-Tube and in 2000 for the Three-Tube rail.

Pre-1998 Oregon 2-tube curb mount rails are listed as TL-2 in the May 1996 FHWA "Equivalent Test Levels for Crash Tested Bridge Railings". This includes standard drawings 43497 and early metric BR206, which have tubes with 3/16" wall thickness. In a TL-2 environment, existing rails from these standard drawings could remain in place without a design exception (may need re-galvanizing, etc.).

- PL-3 (TL-5) Railing - ODOT standard rail BR290 meets PL-3 (TL-5) requirements. Rails successfully tested for PL-3 (TL-5) include a 42" high Type "F" concrete rail and a 42" high vertical face concrete rail.

- 42" Single-Slope Concrete Barrier - This is still considered an experimental rail that will be used on selected Federal-aid projects as directed by the Regions. It is acceptable as either a median or shoulder barrier. If a project has this type of shoulder barrier on the roadway, consider using a single slope matching rail on the structure. FHWA has recommended using a 42" high "F" Rail instead of the single slope barrier.

- Aesthetic Concrete Baluster - This is a decorative rail developed by Texas. It was crash-tested to the TL-4 level and failed.

- Standard Thrie Beam Rail - The last steel post may need to be side mounted on to a thickened section of the end panel to accommodate the 3'-1-1/2" space between the last steel rail post and the first timber post in the transition. If end panels are not used, the end bent or wingwalls may need to be extended or adjusted to accommodate the last side-mounted steel post.

- Timber Rail - Timber should generally not be used for longitudinal members for either temporary or permanent railing. When a timber rail is desired for architectural reasons (as in a park), a steel-backed timber rail may be acceptable. A glued laminated timber rail has been successfully crash-tested for PL-1 (TL-2) criteria.

- Aesthetic Rails designed by another agency – For certain projects, aesthetic bridge rails are desired which are not found in the list of ODOT standard rails. FHWA-approved crash tested rails may be proposed which have been developed by another agency (state, regional consortium, etc.). Provide the following supporting data for review and approval of the rail:

- Confirm that the Test Level of the proposed rail is appropriate for the intended use
- Detail drawing(s) of the rail
- Crash test data and conclusions that the rail performed acceptably
- Documentation of FHWA approval for use
- Design calculations showing compliance with *Chapter 13* criteria of the AASHTO LRFD Bridge Design Specifications

1.13.1.1.3 Loads

When the factor "C" is required for rail post design in the AASHTO Standard Specifications for Highway Bridges, use it when designing the adjacent deck reinforcement and the connection of the post to the deck.

1.13.1.1.4 Bicycle and Pedestrian Railing

Use bicycle and pedestrian railing on the outside of structures that:

- are specifically designed to carry bicycle and/or pedestrian traffic.

- have bicycle and/or pedestrian traffic separated from the roadway by a vehicle rail (see "Note C" located at the end of subsection 1.13.1.1(1), "Rail Selection, General").

AASHTO and the updated Oregon Bicycle and Pedestrian Plan now require a minimum height of 42” for either bicycle or pedestrian railings. The Standard Protective Fence and Standard Pedestrian Rail meet this requirement.

Curbs - Curbs (normally 6”) above the level of the sidewalk should be used under all pedestrian railings where there will be significant pedestrian, vehicular or boat traffic under the structure.

1.13.1.1.5 Combination Rails

Combination rails are rails that provide protection to both vehicles and bicycles or vehicles and pedestrians.

Neither AASHTO nor FHWA have clear specifications concerning acceptance criteria for combination rails. The following recommendations should provide reasonable safe protection:

Combination rail should be crash-tested to the performance level requirements of the site, except as indicated in "Note B" above.

Combination rails must not have any opening such that a 6” sphere can pass through any opening to a height of 27”. Above 27” an 8” sphere must not pass through. See *AASHTO LRFD section 13.8.1*.

- Combination rails on the back of sidewalks for pedestrians or bicycles must be at least 42” high. These rails should be determined on a case by case basis depending on bicycle/pedestrian use.

- Combination rails must be at least 42” high (and in some cases 32”) where bicycles share the shoulder. These rails should be determined on a case-by-case basis depending on site location and bicycle use.

Available combination sidewalk/traffic rail:

- Standard Drawings *BR250* and *BR253* - These provide a 32” high vertical face concrete parapet with pedestrian rail or chain link fence on top at the back of a raised sidewalk (54” and 56” rail heights). These rails have not been crash-tested and should be only be used on a case-by-case basis in locations behind a raised sidewalk at least 5’ wide where the design speed is 35 mph or less.

- Standard Drawings *BR216* and *BR220* - A single steel tube mounted on a 31” vertical parapet (42.5” rail height). This rail has been crash tested to PL-2 (TL-4) requirements.

Available combination bicycle/traffic rail:

- Standard Drawings *BR 256* and *BR260* - These are Type "F" concrete rail with pedestrian rail or chain link fence on top (54” and 56” rail heights). The Type “F” concrete rail has been crash tested to PL-2 (TL-4) requirements. Our judgment is that further testing (with the additions on top) is not warranted.

- Standard Drawing *BR240*- This combines a Type "F" concrete rail, and a two-tube rail with a protective fence mounted behind it (see BR240 details Type ‘C’ and Type ‘D’, respectively. The Type “F” concrete rail has been crash tested to PL-2 (TL-4) requirements. The two-tube rail has been tested at the TL-4 level. Our judgment is that further testing (with the protective fence additions) is not warranted.

- Standard Drawings *BR216* and *BR 220* – Single-tube or two-tube rail mounted on a 31" vertical parapet (42.5" or 54" rail height respectively). The single-tube rail has been crash-tested to PL-2 (TL-4) requirements. Our judgment is that further testing (with the additional rail on top) is not warranted.

1.13.1.1.6 Rail Transitions

Rail transitions are required on new or retrofit rail installations to provide a controlled variation in stiffness from the approach guard rail to the more rigid bridge rail. The current transitions are crash tested and have a very close post spacing. Problems have arisen when the first post off the structure conflicts with the bridge end. In some cases the first post was omitted, which is not acceptable. This has happened when the installation was left totally to the contractor, without advance guidance from the Engineer.

The Engineer of Record should give some thought to any post conflicts and detail a solution in the contract plans. Possible remedies include:

1. Remove concrete to allow room for the normal post to fit.
2. Add a concrete pad (with anchor bolts) to the existing concrete, and add a base plate to the first post. This will require drilling into the existing rail or curb to install dowel bars for anchorage.
3. Mount a structural steel spacer block to a vertical face of a rail end block, in place of a post.

1.13.1.1.7 Rails Over Low Fill Culverts

Standard Drawing *BR266*, Modified Type 2A Guardrail, is for use when the fill height above a box culvert or rigid frame is less than the standard embedment of timber guardrail posts. This design is the same as the system which was successfully crash-tested by TTI and was reported in the Transportation Research Record 1198. During the test, the steel posts yielded about 32", which is similar to our timber post system. Using this method eliminates the need for transitions, which are required because the steel post bridge rail is normally a rigid connection. The crash test report claims this system is acceptable for fill heights from 0 to 3'.

For culverts under 18', one or two posts can now be eliminated from a normal W-beam guardrail installation (post spacing at 6'-3") by using two nested W-beam elements (see attached details). This design has been successfully crash-tested and can now be used on Federal-aid projects.

Figure 1.13.1.1.7 - Detail A, shown below, is an acceptable method for continuing guardrail over areas where a 12'-6" guardrail span, that contains no posts, is necessary. *Figure 1.13.1.1.7 - Detail B*, shown below, is an acceptable method for continuing guardrail over areas where a 18'-9" guardrail span, that contains no posts, is necessary. See standard drawing *RD470*.

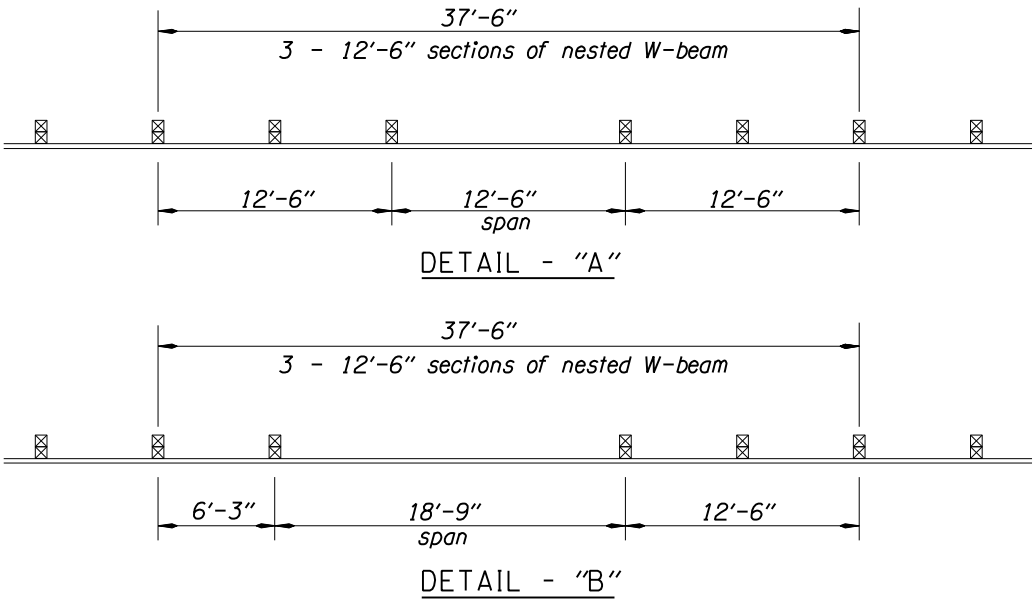

Figure 1.13.1.1.7

1.13.1.2 Bridge Rail Retrofit Guidelines

(1) The Primary Purpose of the Bridge Rail

- to keep errant vehicles from driving off the edge of the bridge
- to smoothly redirect an impacting vehicle

(2) Acceptance Criteria of Bridge Rails

With the above stated purpose the AASHTO *Guide Specification for Bridge Railings* has set the following acceptance criteria for rails on **new bridges**:

- Rail designs should be crash tested to confirm that the rail is structurally adequate and the vehicle trajectory after collision is acceptable.
- Bridge rails should be selected based on the site performance needs.

Although AASHTO has not set acceptance criteria for retrofitting existing substandard rails it is recommended that the AASHTO Guide Specification criteria be used as a starting point.

For 3R and preventive maintenance projects on the NHS, FHWA requires bridge rails and transitions to be replaced unless they meet the criteria in NCHRP Report 230 (PL-2 or higher). Rails that do not meet the NCHRP 230 standard should be replaced or retrofitted with a NCHRP 350 compliant rail or retrofit. Some installations may require an exception; such as when the deck cannot support the added load, the bridge is scheduled for replacement in the current STIP, or for other reasons in the public interest.

(3) Identifying Deficiencies of Existing Bridge Rails

a. The bridge rail must be strong enough to prevent penetration. Most rails properly designed after 1964 will be strong enough to contain an impacting vehicle while those designed prior to 1964 are typically **structurally inadequate**. The structural adequacy of a rail is based on loading conditions of *AASHTO Standard Specifications for Highway Bridges Article 2.7* (10 kips), *LRFD Section 13*, or a crash test. For bridge rail retrofit on a bridge designed under the *Standard Specifications for Highway Bridges*, 17th Edition or earlier, the 10 kip horizontal load should be applied when checking the adequacy of the rail and existing deck in accordance with 17th edition *article 2.7.1.3 and 3.24.5.2*, in particular if the bridge is historic. It should be noted that all aluminum tube rails are structurally inadequate.

b. The bridge rail must safely redirect errant vehicles. Geometric features of rails that may produce high deceleration forces or cause a vehicle to roll over after impact are termed **functionally obsolete**. This type of deficiency is best determined by a crash test. However, there are four geometric features that can be used to identify an existing rail as acceptable or functionally obsolete without crash testing:

- Height of Rail. The bridge rail must be high enough not only to prevent the vehicle from vaulting over, but also to prevent the vehicle from rolling over after impacting. The following table can be used as a guide to evaluate if an existing rail height is adequate.

Performance Level (Test Level) *	**Desired Rail Height****	**LRFD**	
		Sloped	Vert.
1 (TL-3)	27”	NA	27”
2 (TL-4)	32”	32”	32”
3 (TL-5)	42”	42”	42”

* See "b. Occupant Risk" in *Section 1.13.1.2(4)* for discussion of Performance Level.
** Existing rails that are 1” to 2” shorter than desired height may not need to be rehabilitated. Designers should use engineering judgment based on occupant risk.
NA - not applicable

- Presence and Location of Curbs. A curb or walk between the travel lane and the bridge rail may cause an impacting vehicle to launch over the rail or strike it from an unstable position. Rails with curb heights of 6” or more and widths of 9” or more where speeds are greater than 40 mph are typically deficient.

- Vertical Openings and Post Setback. Rails with large openings or exposed posts may cause snagging. Refer to *AASHTO LRFD A13.1.1* for guidance to determine if a tube rail is deficient based on opening height and post set back. The following are examples of deficient rails due to snagging potential from large openings in the rail or exposed posts:

  - concrete parapet with large openings (e.g. *Dwg 3411*)

  - timber rail with concrete posts (e.g. *Dwg 4412 & 4441*)

- steel rail with concrete posts (e.g. *Dwg 7044*)

- Rail Continuity. Rails made up of separate unconnected elements or rails that are not connected to concrete end posts have weak spots at the discontinuity that may cause snagging.

c. The bridge must have an adequate approach rail to bridge rail transition. Like bridge rails, transitions are crash tested to confirm they are structurally and functionally acceptable. To reduce the likelihood of a vehicle snagging, pocketing, or penetrating the transition the following features should be present:

- a firm connection to the bridge rail
- a gradual stiffening of the rail/post system as it approaches the bridge rail
- the transition rail should have a block between the rail element and the post.

Standard transitions are shown on the standard drawings.

In low speed locations where approach rail is not used the bridge rail end should be tapered down or shielded by using a crash cushion.

(4) Retrofitting Deficient Rails

The method or level of upgrade of an existing deficient rail will depend on such factors as:

a. Type of deficiency. Upgrading structurally deficient rails requires strengthening the existing rail. Upgrading a functionally obsolete rail requires eliminating undesirable geometric features. All rail upgrades should include a safe transition from the approach rail to the bridge rail.

b. Occupant risk. Occupant risk should be considered when retrofitting a deficient rail. We have two tools to help evaluate occupant risk:

- **Site performance level requirements**. The Performance Level (as determined by the AASHTO Guide Specifications) is a cost-benefit analysis of occupant risk based on site factors such as traffic volume, vehicle speed and percent trucks. PL-1 (TL-2) sites have lower risk thus the strength and functional requirements and costs will be less than PL-3 (TL-5) sites.

- **Accident history at the site**. Bridges that have been involved in three or more accidents or a fatality in the past five years should be considered to have a high occupant risk and should be retrofitted with a PL-2 (TL-4) or PL-3 (TL-5 or TL-6) rail.

c. Cost of various options.

d. Expected time to bridge widening or replacement. Typically, if a bridge is scheduled for widening or replacement in the *Six-Year State Transportation Improvement Program* rail upgrade work can be postponed until that time. The exception is for rail transitions, they should be upgraded on all bridges whenever there is work in the area.

Occasionally it may be difficult to upgrade an existing deficient rail with a cost effective crash tested rail. In this case, a "special" retrofit design may be required. The "special" retrofit design should try to emulate one (have similar geometric and strength features) as a crash tested rail.

Standard transition designs based on crash tests are available and should be used with standard bridge

rail retrofits. Standard transitions should also be used for non-standard retrofits.

(5) Designer's Checklist

The following is a check list of things to consider for rail retrofit projects:

a. Determine the deficiencies of the Existing Rail.

b. Determine whether Major Rehabilitation or Replacement of the Bridge is scheduled.

c. Determine the Performance Level requirements.

d. Determine the Accident History.

e. Check Structural Capacity of the Existing Bridge - Some existing bridge decks (i.e. overhangs) may be overstressed due to a rail impact loads. In those cases, the rail retrofit should not make things worse. Check for structural reinforcing in the existing rail, specifically in the negative moment regions.

f. Where applicable use one of the Standard Retrofit Drawings (see *Figure 1.13.1.2*). Where it is not feasible to use a Standard Drawing, use a crash tested rail or a rail that emulates one.

g. Estimate Cost.

STANDARD RETROFIT DETAILS

DRAWING NO.	DESCRIPTION	*CRASH TESTED	PERF. LEVEL
BR270	Rail Transition Thrie Beam to Curb and Parapet Rail	YES	PL-2 TL-4
BR273	Thrie Beam Rail Retrofit For Curb and Parapet Rail	YES	PL-2 TL-4
BR276	Rail Transition Thrie Beam to Three-Tube Rail	YES	PL-2 TL-4
BR280	Concrete Rail Type "F" Replacement For Curb and Parapet Rail	YES	PL-2 TL-4
BR283	Concrete Rail Type "F" Retrofit For Curb and Parapet Rail	YES	PL-2 TL-4
BR286	Retrofit for Standard Steel Handrail w/ Sidewalk Rail Mod. Details	YES	PL-2 TL-4

* Crash tested or similar to a rail that has been crash tested.

Figure 1.13.1.2

1.13.1.3 Joints in Bridge Rail

Type 'B' Joints (at Interior Bents with Continuous Deck) – The ¼" preformed expansion joint filler through the rail forms a joint which is provided to reduce shrinkage cracks in the rail and reduce the tendency of the rail to act compositely with the superstructure.

Scoring Joints – Place at 15' maximum centers, equally spaced between Type 'B' joints and expansion joints. For typical ODOT standard concrete rails, joint spacing should be in the range of approximately 10' to 15'. The joint spacing must equal or exceed the critical length "Lc" of the yield line failure pattern (see *AASHTO LRFD A13.3.1*) for a vehicle impact within the panel segment. Note that each panel will have two "Lc" values: one for impacts within the panel (typically in the range of about 8.5' to 12.5') and one for impact at the end of the rail segment (generally in the range of 4' to 5'). The location of each joint should be shown on the deck plan, but need not be dimensioned.

At Bridge Deck Expansion Joints – Rail joints should be provided at every structure joint to prevent cracking or spalling of the rail or structure. Rail details at expansion joints should be as shown on the standard drawings. Rail joints should be skewed to match the deck joint for skew angles up to 20 degrees. **For skew angles in excess of 20 degrees, orient the rail joint normal to the rail.**

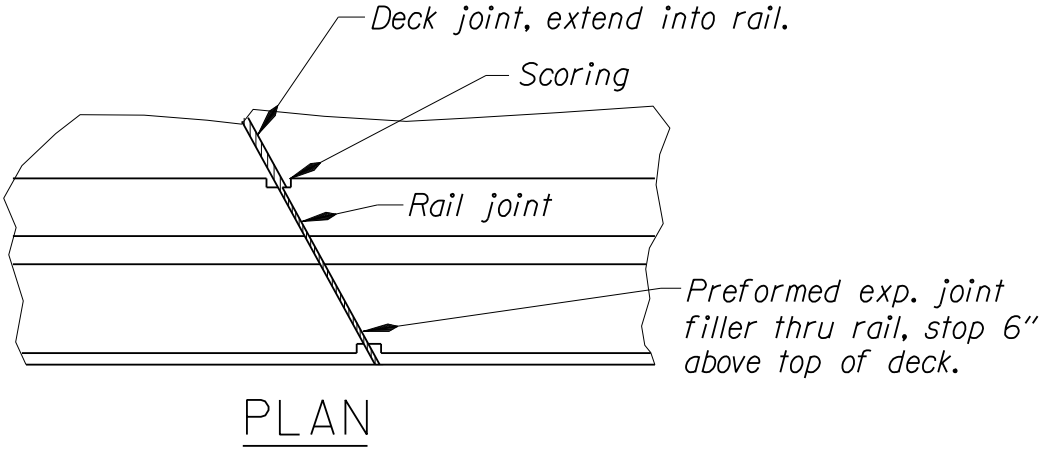

Figure 1.1.21.3A

Rail joints should not be left as open joints, including joints between the bridge end and the bridge end panel, because of the potential problem of water passing through the joint and eroding the embankment. Use the same joint material in the rail or curb as used in the roadway. If an asphaltic plug joint is used, a non-sag poured joint seal or compression joint seal could be used in the rail or curb.

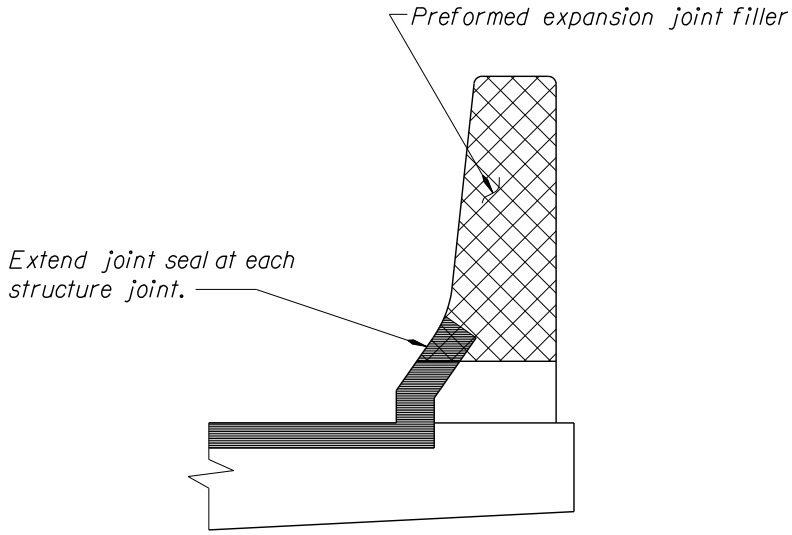

Figure 1.1.21.3B

1.13.1.4 Temporary Barriers

FHWA requires that temporary bridge rails meet TL-3 performance criteria using successfully crash tested systems. Temporary bridge rail should ordinarily be constructed from pin and loop median barrier secured against sliding and overturning as shown in Standard Details *DET3295* and *DET3296*. Restraints will not be required if the barrier can be displaced 3' or more away from the traffic side(s) without infringing on a traffic lane, a work area, or beyond the edge of the deck. Check with the Traffic Control Plans designer to determine if reflectorized barrier should be noted on the detail plans.

The ODOT anchored barrier is adapted from barrier used in a Lincoln, Nebraska crash test, documented in report TRP-03-134-03 dated August 22, 2003. The goal was to model and develop a barrier having shallower anchors than were used in the crash test, so they could be bonded into typical bridge decks. First, models were run of the crash test barrier to build confidence in the analysis relative to the known testing results. New models were run having 4 or more anchors. In addition to the barrier's own anchors, the system relies on the pin and loop connections to transfer load resistance from adjacent barrier segments. To determine maximum anchor loading, one cannot simply divide the total applied load by the number of anchors. Due to barrier deflection, anchors nearest the loading zone will receive a much higher fraction of the load than those further away. A 3-D finite element model is needed to get a realistic estimate of anchor loads. Support spring constants can be calculated from axial and bending deflections of the exposed anchors themselves, which will aid in distributing reactions to other anchors thus reducing peak loads. Provisions of *BDDM 1.20.2.2* were used to estimate resistance of resin bonded anchors for LRFD loads.

<u>Anchor Bolts, Nuts and Washers</u>: Resin bonded anchor bolts shall be fully threaded rods in accordance with ASTM F 1554 Grade 36. Anchor bolts for through bolting shall be in accordance with ASTM A 307 or ASTM F 1554 Grade 36. Nuts shall be in accordance with ASTM A 563 or ASTM A 194. Flat washers shall be in accordance with ASTM F 436 and plate washers shall be in accordance with ASTM A 36 or ASTM A 709 Grade 36.

Install four (4) anchor bolts per barrier on the traffic side as shown in Standard Details *DET3295* and *DET3296*. Do not drill into or otherwise damage the tops of supporting beams or girders, bridge deck expansion joints or drains. Install anchor bolts and nuts so that the maximum extension beyond the face of the barrier units is 1/2". Snug tighten the nuts on the anchor bolts. For through bolted installations, snug tighten the double nuts on the underside of the deck against each other to minimize the potential for loosening.

Omit one (1) anchor bolt within a single barrier unit if a conflict exists between the anchor bolt location and a bridge deck expansion joint or drain. The adjacent barrier units must each be installed with the standard four (4) anchor bolts.

Removal of Anchor Bolts: Upon removal or relocation of barrier units, remove all anchor bolts and completely fill the remaining holes in bridge decks and approach slabs with an approved patching material from the QPL. If ACWS overlay is present and is to remain, completely fill the remaining holes with hot or cold patch asphalt material.

Other Rail Options: At least one crash tested proprietary steel safety shape rail system exists, which could be a contractor option for temporary rail use. Example: see FHWA Acceptance Letter B-165 at:

http://safety.fhwa.dot.gov/roadway_dept/policy_guide/road_hardware/listing.cfm

1.13.2 Impact Attenuators or Crash Cushions

1.13.2.1 Attenuator Design

Attenuators are required in areas, such as gore points of diverging roadways and columns in medians, where hazardous objects cannot be removed from the possible paths of vehicles.

The need for attenuators can often be eliminated by omitting or removing hazardous objects from gore areas. Non-breakaway sign supports are examples of such objects. Bridge parapets in gore areas may be avoidable when they occur near the end of a bridge, where their need can be eliminated by bridging the space between diverging roadways.

Space in a gore area is valuable as a recovery or evasive maneuver area. Therefore, all space wasting features such as curbs and raised pavements, should always be removed. This will avoid interference with the proper functioning of the crash attenuator and it can be located as far from the gore nose as possible.

Bridge will provide designs and plans for attenuators located on structures. Roadway will provide designs and plans for other locations.

Design guidelines and approved systems brochures are available in each Bridge Design Team's room. All new project designs should utilize attenuators that have passed NCHRP 350 testing.

1.13.2.2 Chevrons

Reflective chevrons are detailed on attenuators to make them highly visible and give direction to traffic. Make sure they are correctly detailed, as shown below, on the plans. Refer to Section *00940* of the Standard Specifications and normally specify a Type "Y2" sign. Confirm the sign type with the Traffic Control Unit.

Figure 1.13.2

1.13.3 Protective Screening

Provide protective screening on overpasses (new or existing) at the following locations:

- All structures crossing freeways (interstates and similar controlled access highways with at least 4 lanes) that carry vehicles and/or pedestrians.
- Structures that have sidewalks and that cross high-speed facilities (posted speed ≥ 55 mph) and that are within ½ mile of a school, playground, park, athletic field, shopping center, or other facility likely to generate pedestrian traffic.
- All other structures (with or without sidewalks) crossing high-speed facilities with regular pedestrian traffic.
- Railroad overcrossings
- Pedestrian structures

Protective screening need not be provided on freeway ramp structures that typically do not have any provisions for pedestrians.

Protective screening need not be provided where screening creates a sight distance hazard for motorists. However, approval of a design deviation is required. The basis for such a design deviation is discussed below.

Provide protective screening over all travel lanes plus a minimum of 10 feet beyond the travel lanes on each side. Where on or off ramps also cross under a structure, ensure screening also extends at least 10 feet beyond the end of any ramp travel lanes.

Screening is required for all structures crossing over a railroad. Extend screening 25 feet minimum from centerline of nearest track or railroad access road.

In areas where aesthetics is a consideration and when screening does not extend to the end of the structure, provide an additional transition panel (sloped panel or partial height panel) at the end of each run of screening as an aesthetic termination. For divided highways, continue protective screening uninterrupted through the median. For unusually wide medians and/or divided highways with a significant elevation difference for each direction, protective screening may be interrupted through the median with the use of transition panels, if appropriate.

Provide protective screening on both sides of a structure even when a sidewalk is provided on just one side. Where twin structures cross a high-speed facility, provide protective screening for the center opening between structures.

When protective screening is not provided for structures otherwise meeting the criteria above, obtain approval of a design deviation from the State Bridge Engineer. Provide the following with any request for a design deviation:

- Basis for the proposed design deviation.
- Concurrence from the Region Roadway Manager.
- A plan of the bridge showing sight lines obstructed by the proposed screening if the basis for the exception is lack of sight distance.
- A description of pedestrian activity including width of sidewalks and proximity to pedestrian sources such as schools, playgrounds, or athletic fields.
- The history of incidents and/or signs of graffiti at the bridge site or sites in the vicinity.
- The distance to adjacent bridges also crossing the facility and whether they have screening.
- The approximate cost of widening the structure when widening would avoid a sight distance hazard.

Note that installation of protective screening is mandated by law (ORS 366.462). Proposals to deviate from the screening requirement must be complete and thorough. Public and/or legislative oversight of design deviations for protective screening is likely.

Design protective screening using the following criteria:

- Lightweight (less than 100 plf)
- Translucent (see through)
- Openings 3" square or less (normally a 2" chain link mesh is acceptable, with a 1" mesh for special cases)
- Minimal projected area (less than 30 percent)
- Difficult to climb (no handrail)
- Able to carry pedestrian rail loading
- No opening between the bottom of screening and top of curb, deck, sidewalk, or concrete bridge rail and ensure the bottom of screening has sufficient stiffness to prevent permanent large deflections.
- Minimum 8' high (from top of walk surface), except 10' high at Railroad Overcrossings. When ornamental screening has a variable height, ensure minimum height is maintained at all locations that cross over travel lanes.
- Provide splash guards in ice or snow zones at railroad crossings.

Sight Obstruction - Screening may obscure the intersection sight distance at ramps, cross-streets, or driveway accesses off the end of the structure, non-signalized intersections increase this potential hazard. Stopping screening after it is no longer required may solve some of the problems. However, some cases will require specialized designs.

Vertically Curved Screening - Curved screening is not required, but may be considered when a sidewalk is present. Curvature is an additional deterrent because it forces the thrower into the roadway in order to clear the screening. Note that curved screening may cause an additional sight obstruction. Curved screening may require additional height to accommodate bicycles and, in some cases, horses with riders. Curved screening will not require end treatment.

Horizontally Curved Structures - On horizontally curved structures, give consideration to potential sight distance problems that may occur due to the screening. On structures with tight curves, it may be necessary to use straight screening rather than curved screening because it is difficult to construct curved screening on a tight curve and obtain proper fit of the chain link fabric. When chorded screening is used on a tight curve, ensure any "gap" between the bottom of screening and the curved edge of the bridge does not exceed 3 inches. Such "gaps" may be closed using plates attached to concrete surfaces near the bottom of the screening.

Under Structure Screening - In the Portland area, Region is concerned about homeless people sleeping under bridge end bents. In some cases chain link screening may not be adequate, because it is easily cut. Under structure screening in urban areas may need to be partially buried to prevent tunneling. Consult Region and local districts for end bent treatment.

Aesthetic Considerations – Chain link is the most economical screening available. However, chain link has very low aesthetic value. There are low-cost methods available for improving the aesthetics of chain link screening:

- End treatment – Providing a special termination section at each end of each screening run is a low-cost and effective aesthetic enhancement. This can be as simple as tapering the ends (for example, see *drawing 65137*) or a reduced-height panel. Any end treatment with a height less than the minimum required must start at least 10 feet beyond any travel lanes or ramps (25 feet from tracks or access road for railroad crossings).

- Color – Use of vinyl-coated chain link can greatly improve the appearance of chain link at a very modest increase in cost. Possible colors are black, navy blue, or dark green depending on location. Hot-dip galvanize screening before vinyl-coating.

End treatment and color are proven ways to improve the aesthetics of chain link screening. There are likely other effective options. Designers are encouraged to seek input from others (designers, district, and/or local community) when using aesthetic concepts outside these proven methods. What may appear attractive to a designer may not be desirable to others.

External Requests for Ornamental Screening – ODOT has received requests from local communities to install ornamental screening on existing structures. A number of issues must be addressed before a request can be processed:

- Funding – Ornamental screening can be included in ODOT Modernization projects, if deemed an important architectural item by the project team and supported by the Environmental study. For retrofit to an existing structure (not associated with an ODOT project), the applicant should include possible funding sources with the proposal

- Permits – If someone other than ODOT proposes to install a feature in ODOT Right-of-Way, they must obtain a permit from the District it is located in.

- Design – Ornamental protective screening should not be a distraction for drivers. Check for any sight distance problems it could potentially create. Any design outside of ODOT's normal standards should go through a review process with the District, Tech Center, Office of Maintenance and others to assure it is appropriate and meets clearances and standards as given by ODOT.

- Maintenance – Responsibility for maintenance must be established in case of damage or deterioration. Districts are funded to maintain ODOT standards. If designed and installed by forces outside of ODOT, resources are required to maintain it which should include a bond, city or county taking responsibility.

Also see *Section 3.21.10*, "Structure Appearance and Aesthetics, Ornamentation".

Screening on new structures when needed, will be as follows and as shown on *Figure 1.13.3A* and Standard Drawings *BR240* and *BR241*, or Standard Detail *DET3243* and *DET3244*.

- Bridges with Sidewalks - See Details "A", "B", "C", "D" on *Figure 1.13.3A*.

    - If a barrier is placed between the sidewalk and roadway, screening should be used in place of a pedestrian rail along the outer edge of the structure.

    - If the sidewalk is not separated, screening should be placed behind or attached to the combination rail along the outer edge of the structure.

- Pedestrian Bridges - See Detail "E" on *Figure 1.13.2A*. Pedestrian bridges will be screened in most instances, including all instances where pedestrian bridges cross a vehicular facility.

- Certain sweepers will not fit through curved fence enclosures. Region 1 sweepers measured 10'-5". Standard Drawing *BR240*, Type "A" Fence Section has provisions to allow access. Contact Region to determine an acceptable type of fence.

- Railroad Undercrossings - See Details "A", "B", "C", and "D" on *Figure 1.13.3A*.

    - Splash boards are required where switching is performed or where there are other frequent activities. Typical details are shown on *Figure 1.13.3B and 1.13.3C*.

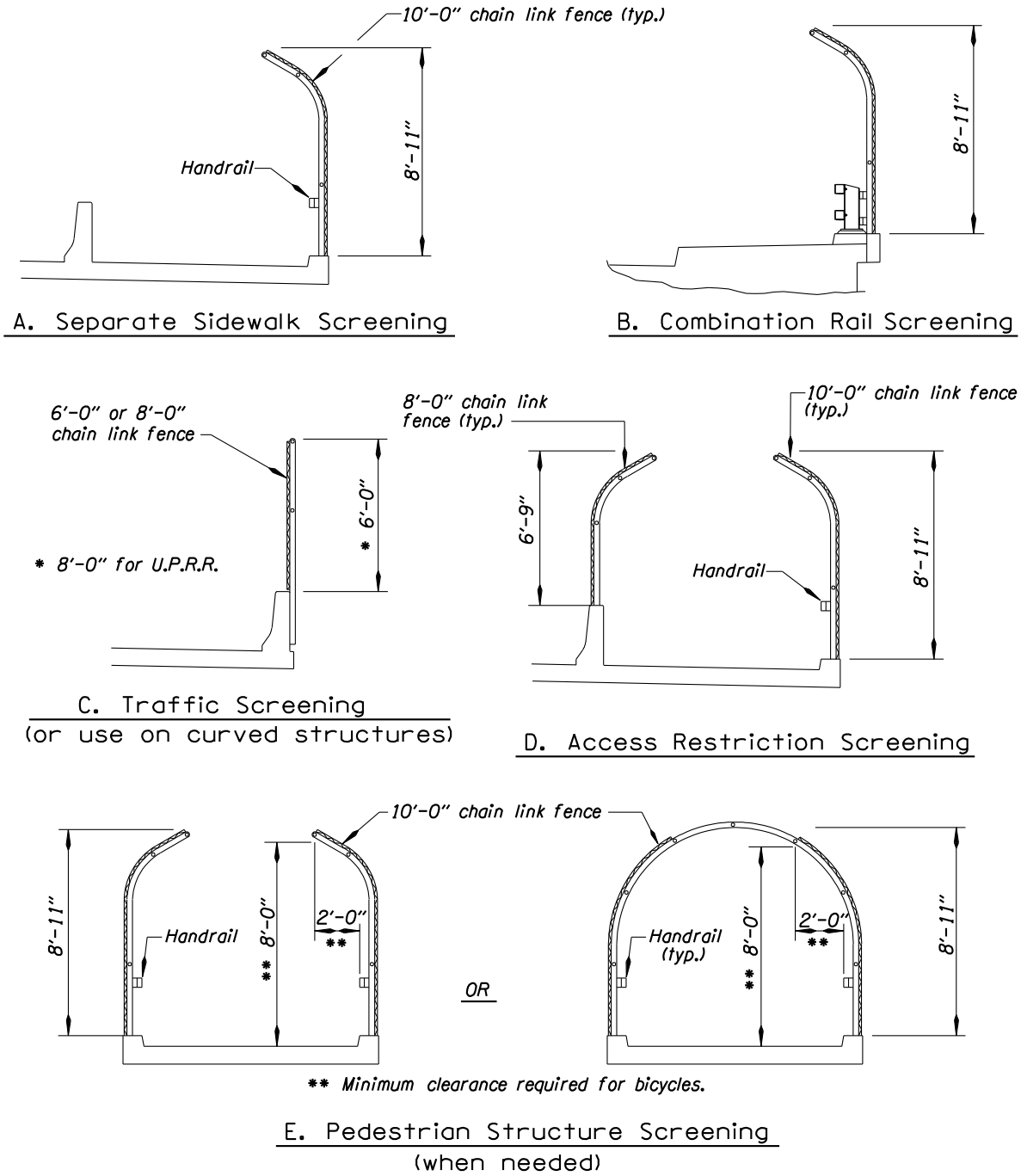

Figure 1.13.3A

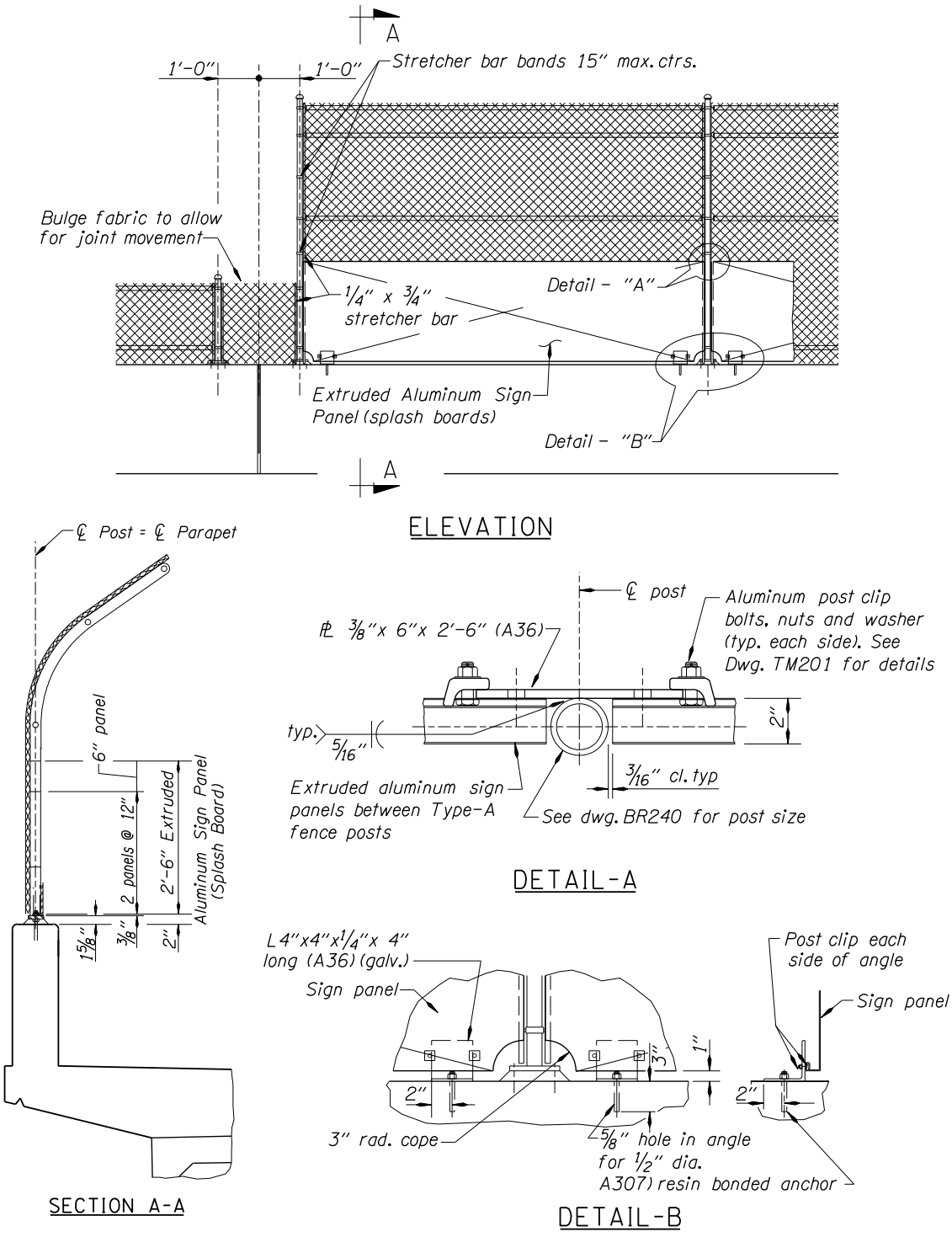

Figure 1.13.3B

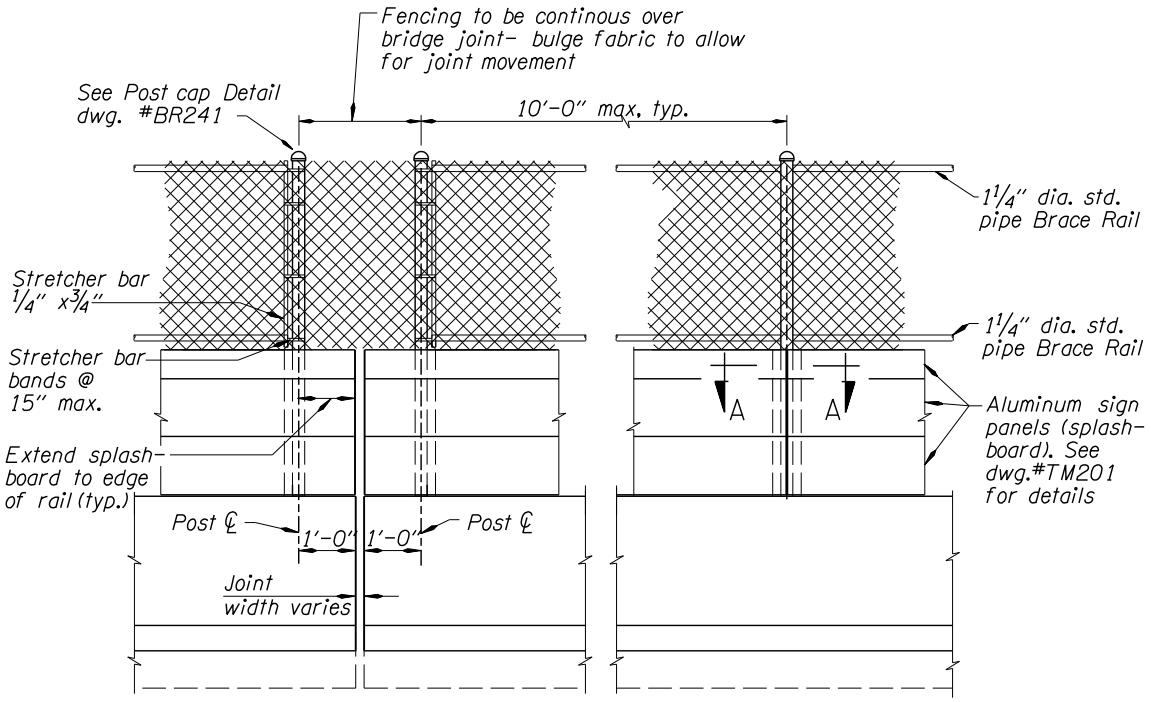

ELEVATION TYPE 'C' FENCE at DECK JOINTS

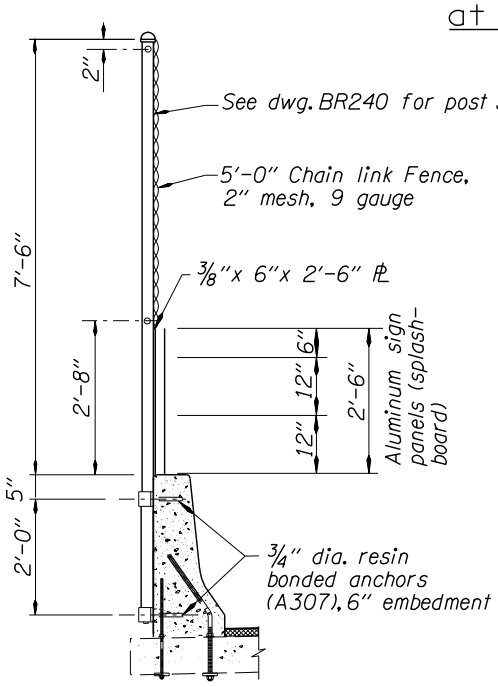

TYPE 'C' FENCE SECTION

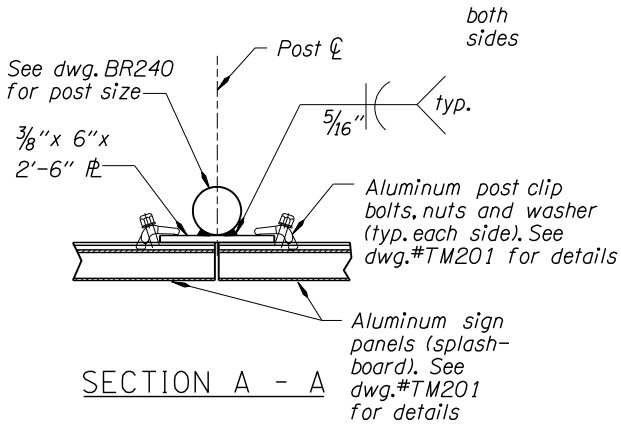

SECTION A - A

Figure 1.13.3C

1.14 BEARINGS AND EXPANSION JOINTS

Outline:

1.14.1 Bearings

1.14.2 Expansion Joints

1.14.1 Bearings

1.14.1.1 Design, General

Provide provisions for bearing replacement, including temporary jacking and support for all manufactured bridge bearings. There is a potential of bearing failure during the service life of a bridge, which requires that provisions for bearing replacement be provided in the design drawings. Providing temporary jacking support (design, detailing and construction) on existing structures is complex and increases the maintenance cost and life cycle cost of a bridge. Including consideration of jacking and temporary support in the original design will reduce future rehab cost and ease future bearing replacement. This work may require pilecap or crossbeam widening, or widening under each girder. Show grout pad locations in the contract drawings for temporary jacking support and a bearing replacement sequence and minimum jacking loads. Check the adequacy of all affected structural elements during bearing replacement and stability of the structure.

1.14.1.2 Elastomeric Bearing Pads

Elastomeric bearings are used to accommodate movements on short to medium-span structures. The three types of pads include:

- plain pads
- laminated pads reinforced with fabric (fiberglass)
- laminated pads reinforced with steel.

Plain pads are made from elastomer molded or extruded into large sheets, vulcanized and then cut to size.

Do not use cotton duck pads or random Oriented Fiber Pads bearing for slabs and box beams construction. Use plain elastomeric (neoprene) pads instead.

Fabric reinforced pads are made from alternate layers of elastomer and fabric (usually fiberglass) in large sheets, vulcanized and then cut to size. Fabric reinforced pads are restricted to short to medium spans with little or no skew.

Steel reinforced pads are made from alternate layers of elastomer and steel cut to size and then vulcanized. A thin cover layer of elastomer encapsulates the steel to prevent corrosion. The exposed edge voids in the pads caused by the steel laminate restraining devices are shop sealed with an appropriate caulking material.

Use Method “A“ to design elastomeric bearings. Where there is a need to use Method “B”, specify in the Special provisions and contract drawing that the Method “B” was used. Elastomeric bearings designed using Method “B” requires extra testing.

Use the following movements for pad thickness design:

$$ES + LF_1*(CR+SH) + LF_2*(TF \text{ or } TR)$$

Where:

ES = elastic shortening movement
CR = creep movement CR = (ES)(CF)
SH = shrinkage movement
TF = temperature fall movement
TR = temperature rise movement
CF = creep coefficient
LF_1 = from LRFD 3.4.1
LF_2= TU, Load Factor from LRFD Table 3.4.1-1

Use proper signs and the Load Factor that produces the largest movement in each load combination.

The final elastomer thickness is 2 times the design movement. Nominal pad thickness should be multiples of 1/2 inch, from 1/2 inch to 6 inches maximum. The actual finished thickness will vary depending on the type of reinforcement. Fabric has a negligible thickness. Steel plate thickness may vary with the manufacturer, but should be a minimum of 14-gauge.

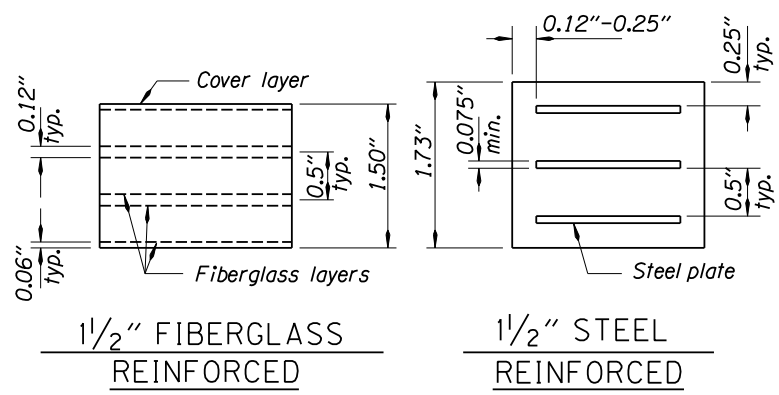

Figure 1.14.1.2A

Pad thickness called for on detail plans should be the total thickness of the elastomer required. If bearing pad elevations are shown, the assumed finished pad thickness should be listed. Use circular elastomeric bearing pads for curved steel girders.

Examples are shown below.

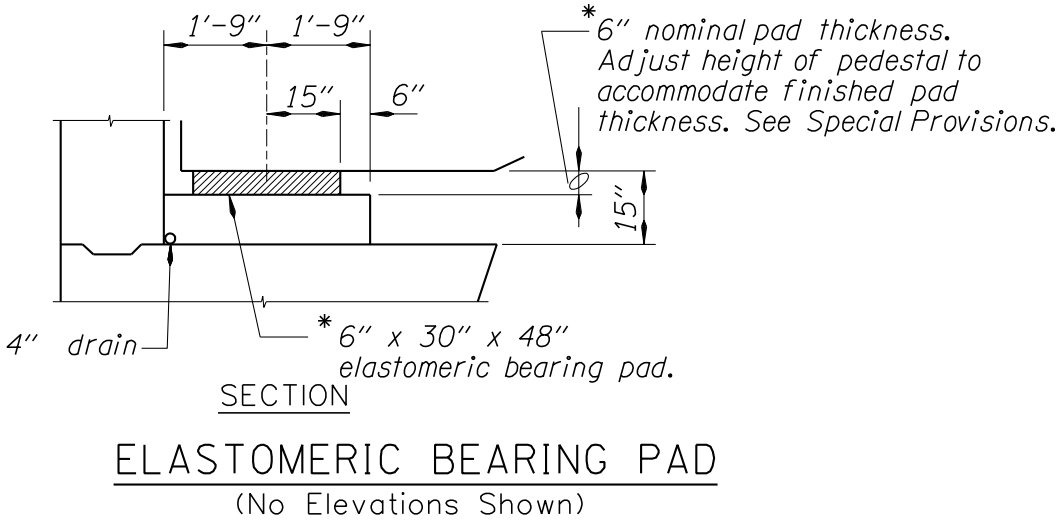

ELASTOMERIC BEARING PAD
(No Elevations Shown)

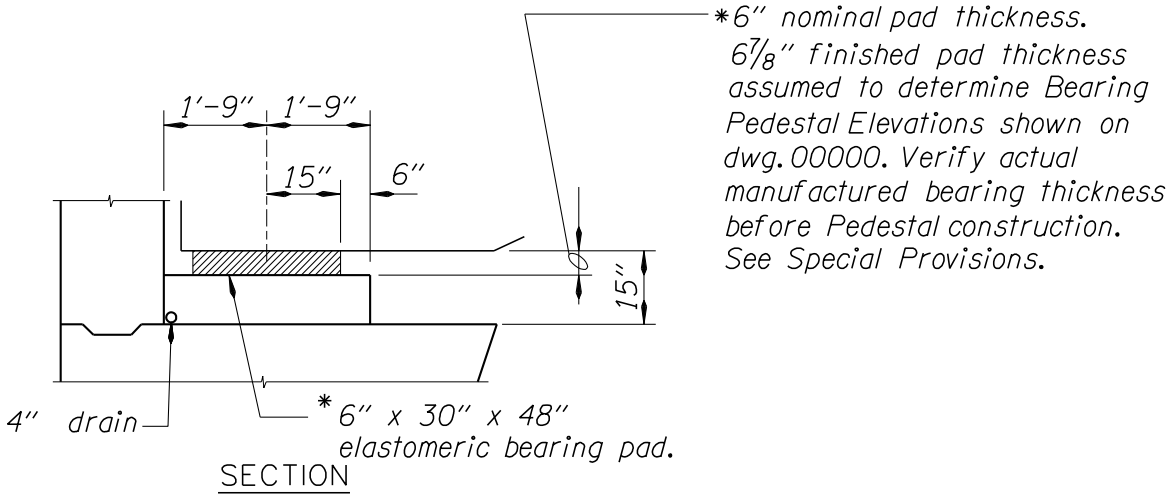

ELASTOMERIC BEARING PAD
(Elevations Shown)

Figure 1.14.1.2B

For prestressed slab and box beam bearing pad sizes, use *Figure A1.11.1.7D* (end bents) or *Figure A1.11.2.2C* (interior bents).

1.14.1.3 Proprietary Pot, Disc, Slide, Radial, or Spherical Bearings

These bearings are normally used on long-span and post-tensioned concrete structures where the design movement cannot be accommodated with elastomeric bearings.

When provided to allow longitudinal movement for concrete superstructures, design bearings to accommodate the anticipated effects of shrinkage, creep and elastic shortening (where applicable) as well as temperature.

Use the following movements for proprietary bearings:

Shortening: $ES + LF_1*(CR + SH)+ LF_2(TF)$
$ES + LF_1*(CR + SH)+ LF_3(EQ)$

Lengthening: $LF_2*(TR)$
$ES + LF_1*(CR + SH)+ LF_3(EQ)$

Where:

ES = elastic shortening movement
CR = creep movement CR = (ES)(CF)
SH = shrinkage movement
TF = temperature fall movement
TR = temperature rise movement
CF = creep coefficient
EQ = Maximum design earthquake displacement (movable bearings)
LF_1 = from *LRFD 3.4.1*
LF_2= TU, Load Factor from LRFD *Table 3.4.1-1*
LF_3= Load Factor from LRFD *Table 3.4.1-1*

Use proper signs and the Load Factor that produces the largest movement in each load combination.

The creep coefficient above is taken as 1.5 for both prestressed and post-tension concrete structures. Shrinkage movement is calculated using 0.0004 times the total length of the structure. For prestressed concrete structures 40 percent of this movement takes place within the first thirty days after manufacture. Therefore, the amount of creep and shrinkage movement for these structures, after placement, can normally be taken as 60 percent of the total.

Values for shortening of post-tensioned, cast-in-place concrete bridges have been determined by field measurements by the ODOT Bridge Section. Compare the design values with the field measured values and use the more conservative values.

The initial position of expansion bearings shall be detailed so that the bearing will behave satisfactorily after the design movement has taken place.

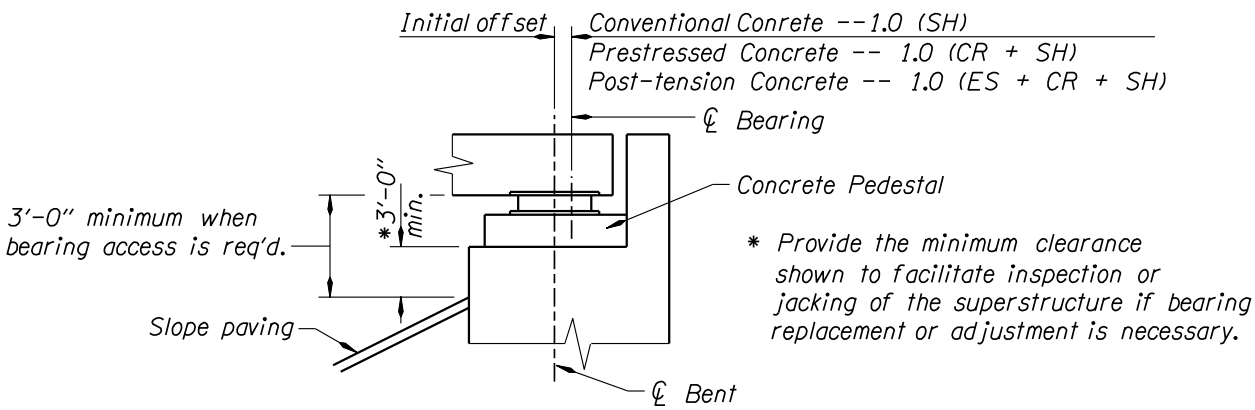

Figure 1.14.1.3A

Performance Specifications for Approved Proprietary Bridge Bearings are now covered by the Standard Specifications. Approved bearings are listed in the *Qualified Products List*, which is available on the ODOT website.

The designer must check the shop drawings, specified test results, and certifications for compliance with these specifications.

When proprietary bearings are used, show the following details and information in the contract plans:

(1) Schematic Drawing - A schematic drawing of the bearing showing the method of attachment of the upper and lower units to the superstructure and substructures, respectively. See *Figure 1.14.1.3B* for an example.

(2) List design notes for:

- Required clearance to edge of concrete support
- Maximum allowable concrete bearing stress
- Minimum rotational capacity of bearing (not less than 0.015 radian)
- Any restriction as to type of bearing (pot, disc or spherical)
- Reference to bearing schedule for load and movement capacity.
- Reference to standard specifications for painting.
- Reference to the *Qualified Products List* for approved bearings.

Paint all exposed surfaces of the bearing devices except teflon, stainless steel, machine finished or polished bearing surfaces, as set forth in *SP 00594*. Provide a primer coat only for portions to be in contact with concrete and for steel to steel contact surfaces.

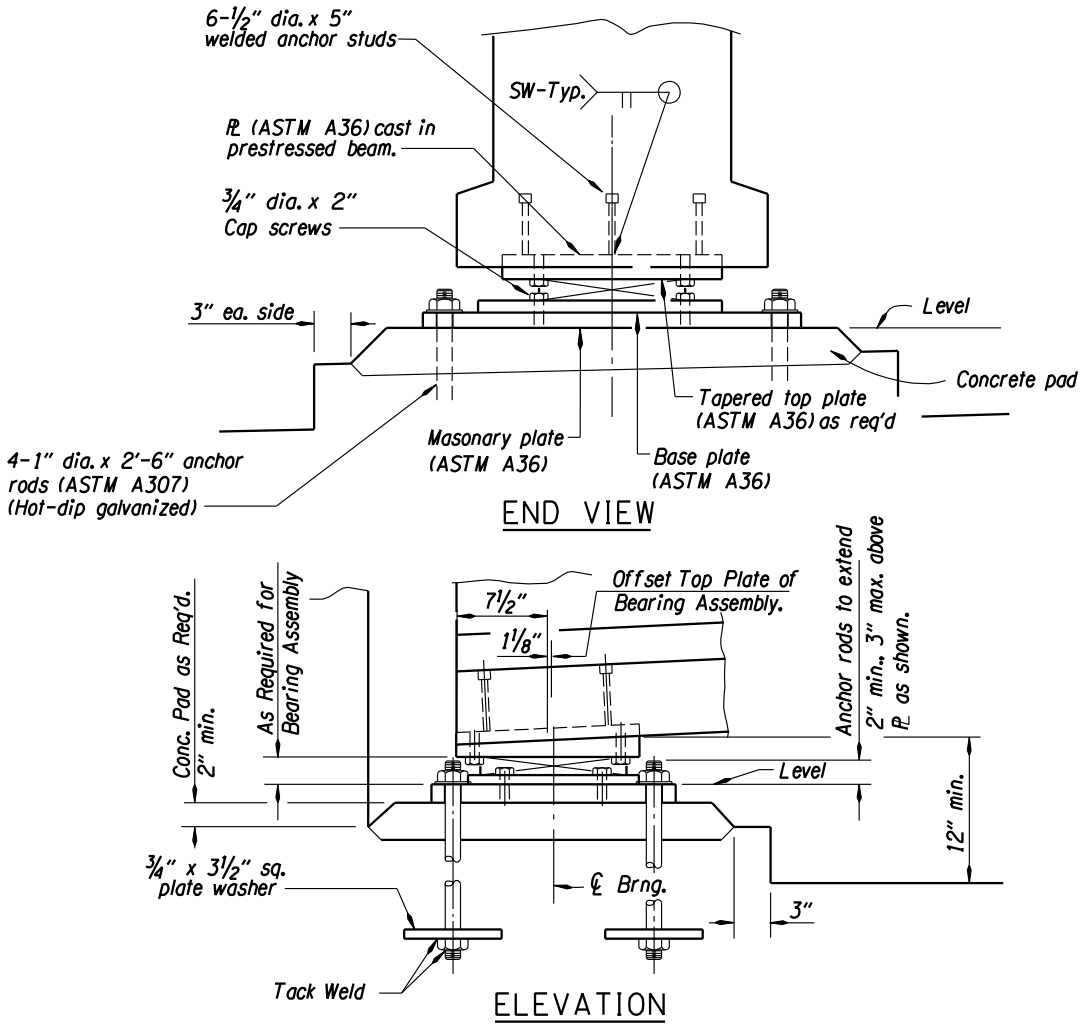

Figure 1.14.1.3B

<u>(3) Bearing Schedule</u> – Include the following items in the Bearing schedule:

- Location of bearing (bent number)
- Number of bearings required (number per bent)
- Bearing fixity (fixed, guided or non-guided)
- Final dead load (load/bearing)
- Vertical design capacity (dead load + live load + impact, load/bearing)
- Horizontal design capacity of fixed and guided bearings (not less than 10 percent of the vertical design capacity).

The specification requires each guided bearing to resist the entire horizontal load at any one bent. Use no more than two guided bearings per bent or hinge. Where more than two guided bearings are required, provide devices independent of the bearings to resist horizontal loads. Use non-guided bearings at these locations.

- Design movements for:
    - Mean temperature
    - Temperature rise
    - Temperature fall
    - Creep, shrinkage and elastic shortening
    - Change in bearing centerline per specified temperature increment

The top bearing plate dimensions shall be adequate to compensate for the initial bearing offset shown.

Provide additional bolted plates with the top and bottom plates of the bearing assembly to facilitate removal of bearing for repair or replacement and to provide a level surface for the bearing unit.

BEARING SCHEDULE

Bent	No. Req'd	Type	Design Load Capacities in kips per Bearing			Initial Offset	Calculated movements			Movement per 10°F Temp. change	Minimum Movement Capacity from Initial Position		
			Vertical	Lateral	Longit.		30°F Temp. Rise	40° F Temp. Fall	Creep, shrinkage & Elastic shortening		Temp. Rise Direction	Temp. Fall Direction	Total
1 & 5	4	Guided	1000	*600	—	3″	7/8″	1 1/4″	4 1/2″	5/16″	1 1/2″	7 1/2″	9″

* Reduce design load to 200 kips for PTFE surface only.

Figure 1.14.1.3C

1.14.1.4 Bearing Replacement

Consider the potential of expansion bearing replacement during the life of the structure in sizing of crossbeams and bents. Provisions may need to be made for jacking locations.

If a bent is accessible (close to the ground, out of traffic, etc.) it may be assumed that a falsework jacking bent can be constructed and no special provisions on the bent are required.

If the bent is not easily accessible, provision for jacking, such as a wider crossbeam or strengthened diaphragm beam should be provided.

1.14.1.5 Reinforced Concrete Bearing Seats

(1) Clearance - The minimum horizontal clearance from the edge of a bearing plate, or 1 inch and thicker elastomeric bearing pad, to the edge of a concrete bearing seat shall be 6 inches, or 3 inches plus the thickness of grout under the bearing, whichever is greater. Where the bearing is skewed with the bent, this dimension may be reduced at the corner of the pad. Locate anchor bolts a minimum of 6 inches clear of the nearest face of concrete.

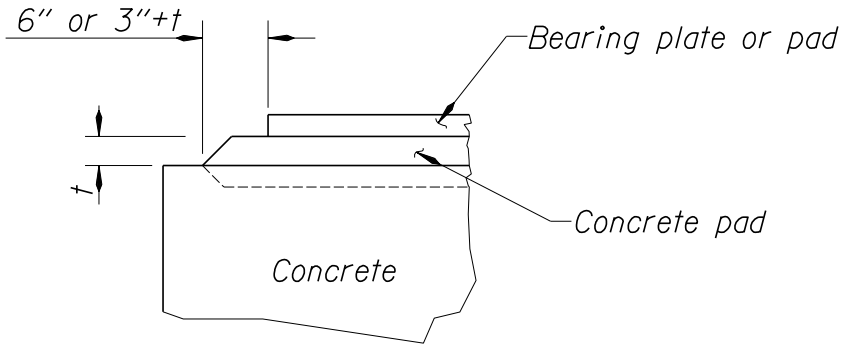

Figure 1.14.1.5A

(2) Additional Reinforcement - Generally, a reinforced concrete buildup, as shown below, shall be detailed under the bearings of all prefabricated beams, except precast slabs and box beams less than 70 feet in length.

Certain bearings may require no concrete buildup but have the bearing surface ground to grade.

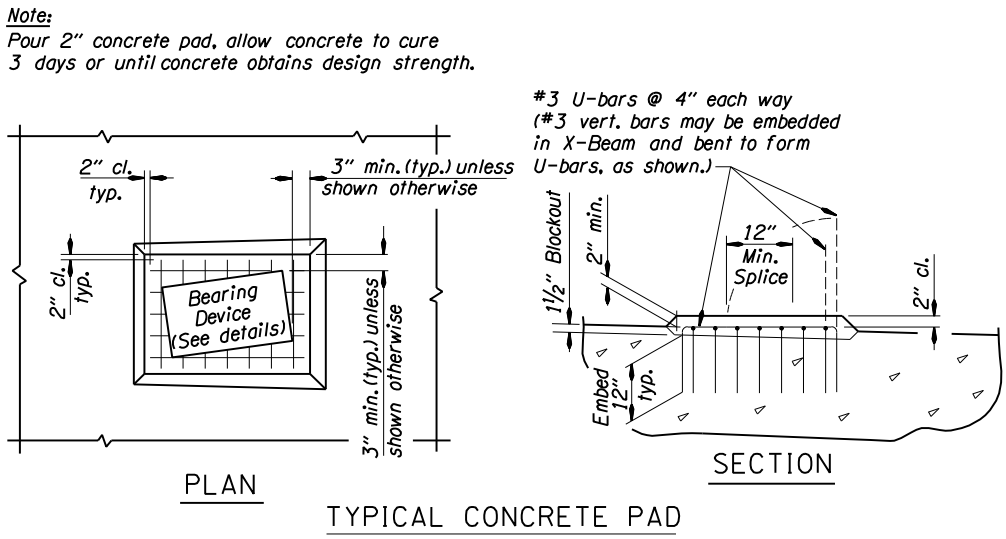

Figure 1.14.1.5B

1.14.1.6 Unreinforced Bearing Seats (Prestressed Slabs and Boxes)

(1) General – For prestressed slabs and boxes, provide bearing details as shown in Figure 1.14.1.6.

Set precast concrete slabs over 40 feet in length on elastomeric bearing pads. Do not allow cotton duck pads as a replacement for elastomeric bearing pads.

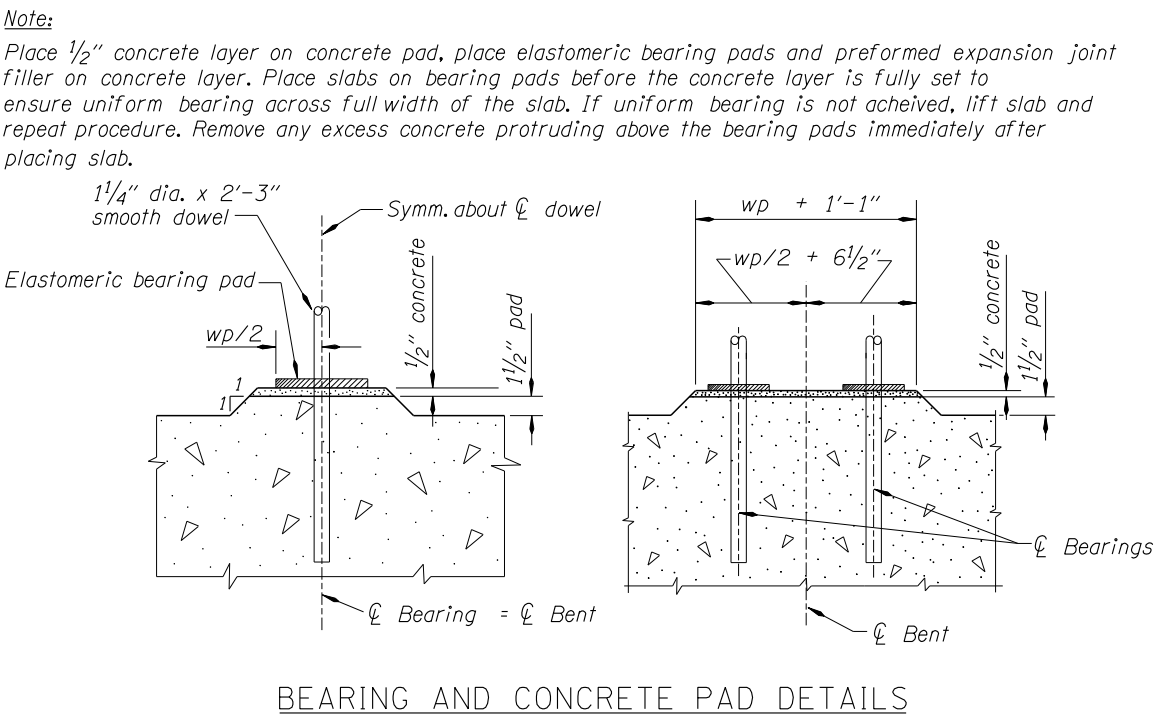

Figure 1.14.1.6

(2) Construction Procedure -

STEP 1. Pour 1-1/2 inch concrete pad, allow concrete to cure for 3 days or until concrete obtains design strength

STEP 2. Place 1/2 inch concrete layer as shown in *Figure 1.14.1.6*.

1.14.2 Expansion Joints

1.14.2.1 Deck Expansion Joint Seals

Consider integral abutment or semi-integral abutment wherever criteria in *BDDM 1.11.2.4* are met. For short span bridges with pin end bent connection use preformed expansion joint filler. These joints are the least expensive joint and easy to repair. Design expansion joint seals to provide for the effects of temperature, shrinkage and creep.

Skew Angle – Use skew angle ±5 degrees different from snow plow angle for all joints except asphaltic plug joints. Normally the angle of attack of snowplows is skewed 30 degrees to the roadway alignment. Snowplow blades can fall into the joint where the skew angle of the joint matches the snowplow's angle,

resulting in danger to the snowplow driver or traffic. Consider the effect of skew angles on future widening of the structure.

(1) General Information and Definitions

Armored Joint - Steel armoring to protect the vertical edges of a joint opening. The armor may be steel shapes.

Asphaltic Plug Joint Systems - A closed expansion and contraction joint system composed of aggregate and flexible binder material placed over a steel bridging plate.

Closed Expansion Joint - A joint in which a seal material is placed to prevent water or debris from entering the joint. This includes poured joint seals, compression joint seals, asphaltic plug joint systems, preformed strip seals, and modular bridge joint systems.

Filled Joint - A joint using a preformed joint filler, hot poured joint filler, traffic loop sealant, or a combination of these materials.

Hot Poured Joint Filler - A filled joint filled with a hot-poured asphaltic material.

Modular Bridge Joint Systems (MBJS) - A closed expansion and contraction joint using a series of continuous preformed strip seals inserted into steel shapes to seal the joint.

Poured Joint Seal - A closed expansion and contraction joint sealed with a rapid-cure poured joint sealant (2 part silicone).

Preformed Compression Joint Seal - A closed expansion and contraction joint sealed with a continuous preformed elastomeric compression gland.

Preformed Joint Filler - A filled joint using a preformed material placed prior to the concrete pour.

Preformed Joint Seal - A closed expansion joint using preformed strip seal systems, preformed compression joint seals, or modular expansion joint systems as specified.

Preformed Strip Seal System - A closed expansion and contraction joint using a continuous preformed elastomeric gland (strip seal) inserted into an extruded or formed steel retainer bar with steel anchors.

Traffic Loop Sealant - A filled joint between the bridge and bridge end panel connection where asphalt surfacing is used.

Use preformed single strip seals to seal deck joints with up to 4 inch range of movement (1-1/2 inch minimum installation width). For joints of greater anticipated movement, use a modular bridge joint system. It is not recommended to use a modular bridge joint system solely to provide for possible seismic movements.

Preformed compression seals may be specified for joints with a design movement of up to 1-3/4 inches.

Asphaltic plug joint seals may be specified where following conditions are satisfied:

- Maximum range of design movement up to 1-1/2 inches (total)
- Maximum bridge skew less than 45 degrees
- Maximum lateral movement at joint 1/4 inch
- Maximum vertical movement at joint (uplift) 1/4 inch

Asphaltic Plug joints do not perform well under following conditions:

- Where the approaches are asphalt concrete.
- Close to stop light or where traffic are accelerating or decelerating because of the special geometry or before stop light.
- Bridge with a curved horizontal alignment.
- Longitudinal joint between two structures. Skid resistance of this joint diminishes with time and it may become a hazard to motorcyclist and bicyclists.

See Standard Drawings *BR139, BR140, BR141, BR145, BR157, and DET3150* for joint details.

Drawings *BR141, BR145 and DET3150* show the depth of metal to be 8 inches, with a plate being welded to the 2 inch deep rail section.

For modular joints, the bottom of the rail section must be the same depth as the bearing boxes, as noted as "Point F" on Drawing *BR150*.

Check the *Qualified Products List* for the currently acceptable materials and joint systems.

Joint Terminology - It has been a common practice to incorrectly specify certain joint materials on Bridge drawings. All drawings should be corrected to provide consistency with joint definitions.

(2) Expansion Joint Blockout

A blockout detail should be shown on the plans to allow the expansion joint assembly to be placed a period of time after the final deck pour. Providing a blockout makes the adjacent deck pour easier, provides smoother deck transition to joint, and allows the majority of the superstructure shrinkage to occur prior to joint assembly placement.

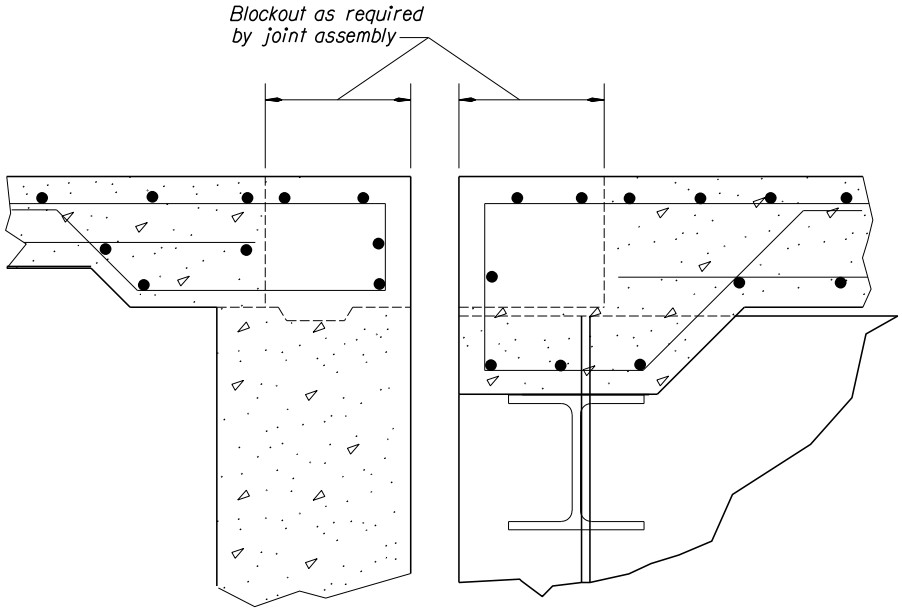

Figure 1.14.2A

(3) Expansion Joint Setting, General

Use a minimum change of joint width due to shrinkage of 1/4 inch per 100 feet for the full length of non post-tensioned concrete segments (both pretensioned and conventional).

Use a change of joint width due to creep and shrinkage of ½ inch per 100 feet for the contributing length of post-tensioned segments.

Use equation (a) for calculating thermal effect on steel girder superstructures and equation (b) for concrete superstructures.

(a) R = LF*(TR + TF)
(b) R = LF*(TR + TF) + CR + SH

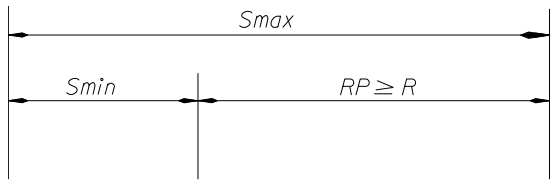

Figure 1.14.2B

Where:

S_{min} = Minimum serviceable seal width
S_{max} = Maximum serviceable seal width
R = Required seal range
RP = Provided seal range (S_{max} - S_{min})
CR = Creep movement CR = (ES)(CF)
SH = Shrinkage movement
TF = Temperature fall movement
TR = Temperature rise movement
ES = Elastic shortening
CF = Creep factor
LF = Load Factor from *Table 3.4.1-1 and article 3.4.1* of AASHTO LRFD Design Specification. Use the Load Factor that produces the largest movement in each load combinations.

	Conv. Concrete	Prestressed Concrete	P/T Concrete
CREEP: CREEP FACTOR	———	1.5	1.5
Portion of CREEP to use	———	50%	70%
SHRINKAGE: ult	0.0004	0.0004	0.0004
Portion of SHRINKAGE to use	60%	60%	60%

Figure 1.14.2C

For the compression seals shown on Drawing *BR140* S_{min} and S_{max} are the width of the seal under a compressive force of 50 and 10 pounds per inch, respectively. In skewed joints, S_{min} and S_{max} may be

limited by the allowable shear deformation of the seal. For the seals shown on *BR140*, shear deformation of the seal should never exceed 10 degrees.

(4) <u>Joint Setting at Mean Temperature</u>

In most cases, the range of serviceable seal width provided by a standard joint seal (RP) will be somewhat larger than the range required by design (R). This excess [E = RP - R] shall be equally distributed for expansion and contraction.

The following schematics show joint settings for the two design cases above:

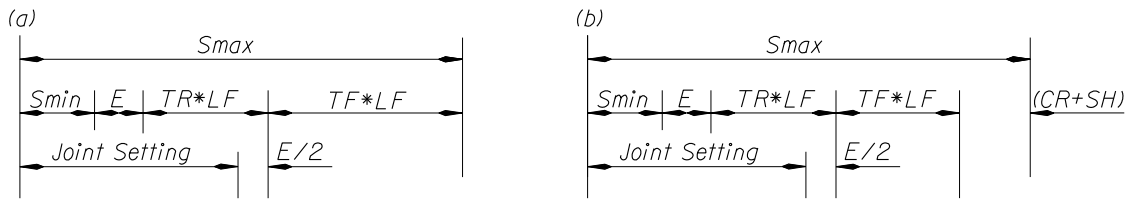

Figure 1.14.2D

Use the following form to call out joint settings on the plans:

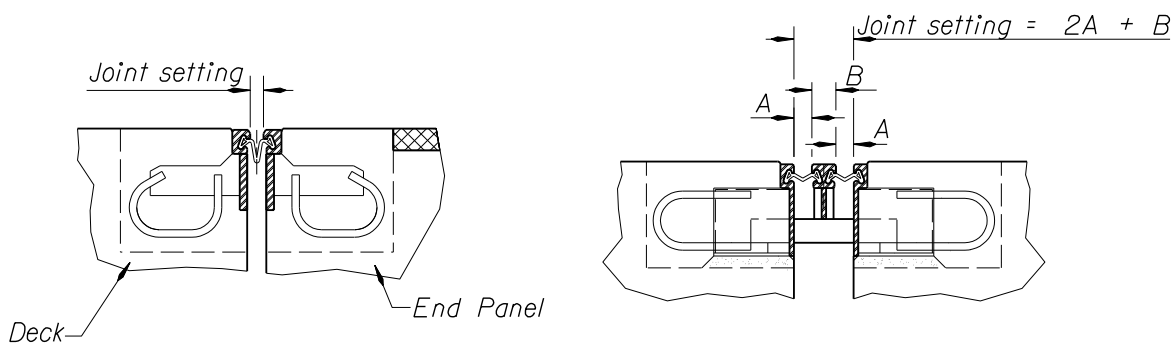

Figure 1.14.2E

Decrease Joint setting ___ inches for every 10^0F of structure temperature above ___^{0}F.

Increase joint setting ___ inches for every 10^0F of structure temperature below ___^{0}F.

Expansion joints are normally set after tensioning is complete, so elastic shortening is not included in the joint setting width.

1.14.2.2 Electrical Conduit Expansion Joint

At those locations on the structure where an electrical conduit crosses an expansion joint, show a detail similar to the following on the plans:

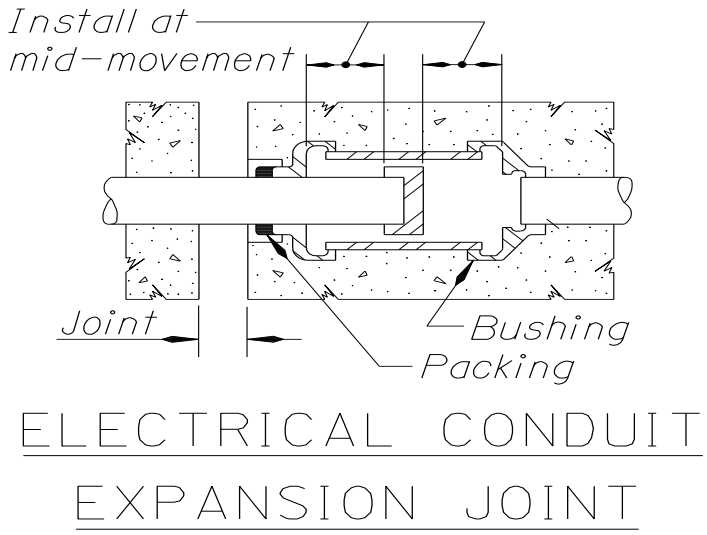

Figure 1.14.2F

1.15 SOUNDWALLS

Outline:

1.15.1 Soundwalls, General

1.15.2 Seismic Load

1.15.3 Factor of Safety Against Overturning (Spread footings only)

1.15.4 Pay Limits for Soundwalls

1.15.1 Soundwalls, General

Since 1989, AASHTO has provided a design manual *Guide Specification for Structural Design of Sound Barriers*. These guidelines, plus the additions listed below, are to be used for designing all soundwalls.

It is now necessary to investigate the soil condition specific to the soundwall site and then identify the soil type on the Soundwall Plan and Elevation sheet. It is recommended that this be taken care of early in the project's development. Refer to the ODOT Geotechnical Design Manual, *Chapter 16*.

The new AASHTO Guide Specifications allow less lateral soil capacity, especially when the ground around the soundwall is sloped, as when located on a berm. Conditions for which the standard drawings were designed include:

- Average or Good soil types. Region offices must perform a soil investigation of the site in the preliminary stage of design. The Plan and Elevation sheet must specify the soil type, which will affect the footing depths.

- Exposure B1. See the 1992 AASHTO *Guide Specifications for Sound Barriers*, *Article 1-2.1.2* for a definition of this case. See *Figure 1.28.1*, for the Oregon map defining wind speed zones for the 50 year recurrence intervals.

- A maximum 2 foot differential in the soil elevation from one side of the soundwall to the other was assumed.

- Pilaster footings were designed by the Load Factor Design Method. Ultimate Lateral Soil Capacities (R) were obtained by the Log-spiral Method, increased by a 1.5 isolation factor and include foundation strength reduction factors (*Guide Spec 1-2.2.3*). Footing embedment lengths were designed by the Rutledge Equation where S1 = RD/3. S1 is the Allowable Ultimate Lateral Soil Capacity. See example in *Appendix C* of the Guide Specifications.

Conditions for which the standard drawings were NOT designed include:

- Poor Soil type foundation material. This condition requires a foundation investigation and special design.

- Exposure B2 or C. Also locations on bridges, retaining walls, or traffic barriers.

- Impact loads or live loads immediately adjacent to the soundwall.

1.15.2 Seismic Load

Refer to Guide Specifications *Article 1-2.1.3*

EQD = (A)(f)(D)

(A)(0.75)(Dead Load) - - except on bridges and retaining walls
(A)(2.50)(Dead Load) - - on bridges and retaining walls
(A)(8.00)(Dead Load) - - connections for prefabricated soundwalls on bridges
(A)(5.55)(Dead Load) - - connections for prefabricated soundwalls on retaining walls

Note: The product of (A)(f) should not be taken as < 0.1

1.15.3 Factor of Safety Against Overturning (Spread footings only)

See Guide Specifications *Article 1.8.2*

2.0 for Dead Load + Earth Pressure + Live Load Surcharge
1.5 for Dead Load + Wind Load + Earth Pressure
1.5 for Dead Load + Seismic Load + Earth Pressure

1.15.4 Pay limits for Soundwalls

Use square feet,

(Bottom of wall to top of wall) (wall length)

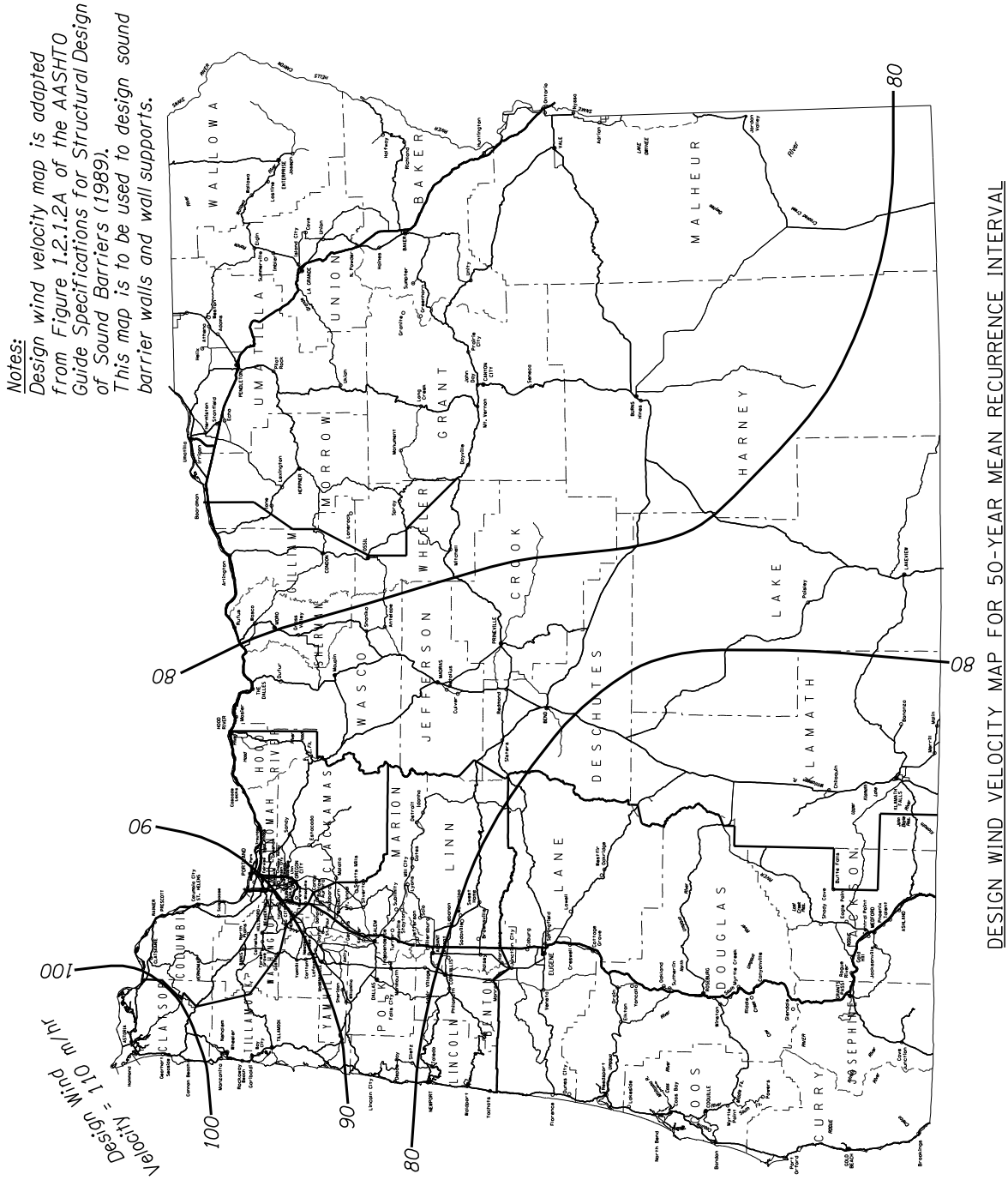
Notes:
Design wind velocity map is adapted from Figure 1.2.1.2A of the AASHTO Guide Specifications for Structural Design of Sound Barriers (1989).
This map is to be used to design sound barrier walls and wall supports.
DESIGN WIND VELOCITY MAP FOR 50-YEAR MEAN RECURRENCE INTERVAL
Design Wind Velocity = 110 m/hr
100
100
90
80
80
80
80
WALLOWA
UNION
BAKER
MALHEUR
UMATILLA
MORROW
GRANT
HARNEY
GILLIAM
WHEELER
CROOK
SHERMAN
WASCO
JEFFERSON
LAKE
HOOD RIVER
DESCHUTES
KLAMATH
CLACKAMAS
MARION
LINN
COLUMBIA
LANE
DOUGLAS
CLATSOP
TILLAMOOK
YAMHILL
POLK
LINCOLN
BENTON
COOS
CURRY
JOSEPHINE

Figure 1.15.1

1.16 (RESERVED)

1.17 SEISMIC DESIGN

Outline:

1.17.1 Design Philosophy

1.17.2 Applications of AASHTO LRFD Bridge Design Specifications

1.17.3 Applications of AASHTO Guide Specs for LRFD Seismic Bridge Design

1.17.4 Liquefaction Evaluation and Mitigation Procedures

1.17.5 Costs

1.17.6 Instrumentation

1.17.7 Dynamic Isolators

1.17.8 Seismic Restrainer Design (New Designs And Retrofits)

1.17.1 Design Philosophy

AASHTO has been very active over the past few years on updating the Seismic Design procedures and practices for highway bridges. As a result, the 2008 Interim Revisions to the 4th edition of the *AASHTO LRFD Bridge Design Specifications* were developed in late 2007. Though these revisions still support a "force-based" design philosophy, they represent a significant update to many areas of the seismic design provisions in AASHTO LRFD Bridge Design Specifications. In 2008, AASHTO also adopted the *Guide Specifications for LRFD Seismic Bridge Design*, a standalone document, which represents a "displacement-base" design philosophy.

Design all bridges for full seismic loading according to the 2nd edition of *AASHTO Guide Specifications for LRFD Seismic Bridge Design*. Comply with ODOT's additional requirements and guidelines summarized in *BDDM 1.17.2* if designing seismically according to *AASHTO LRFD Bridge Design Specifications* for projects initiated prior to May 1st, 2009, or *BDDM 1.17.3* if designing seismically according to *AASHTO Guide Specifications for LRFD Seismic Bridge Design*.

Notify and consult ODOT Bridge Section for decisions involving deviations to the standard seismic design practices described in this manual. Deviations from the following guidelines should be justified and documented. The documentation should be in the permanent bridge records.

At the end of the design process, fill in and submit to ODOT Bridge HQ a copy of the Seismic Design/Retrofit Data Sheet. A copy of this form can be downloaded at:

http://www.oregon.gov/ODOT/HWY/BRIDGE/standards_manuals.shtml

Seismic load effects should be considered for all projects using the following guidelines:

1.17.2 Applications of AASHTO LRFD Bridge Design Specifications

1.17.2.1 General Considerations

New Bridges: Design all bridge components for full seismic loading according to the current edition of *AASHTO LRFD Bridge Design Specifications*, except as modified by *BDDM 1.11.3.5 to 1.11.3.11, and 1.17.1 to 1.17.8*. Consider the load factor for the Live Load on Extreme Event Load Combination I, $\gamma EQ = 0$ (*LRFD 3.4.1*), unless the bridge is designated by Bridge Section as a major, unusual or unique structure. Seismic ground motion values should be based on the 2002 USGS Seismic Hazard Maps. ODOT versions of these maps are available at the ODOT Bridge Standards and Manuals web page: http://www.oregon.gov/ODOT/HWY/BRIDGE/standards_manuals.shtml. The 2002 USGS Seismic Hazard Maps and other ground motion data may be obtained from the USGS web site at the following web address: http://earthquake.usgs.gov/research/hazmaps/. The latitude and longitude of the site is needed to obtain the most precise data.

A program to develop the response spectra using the general procedure has been developed by the Bridge Section and can be accesses through the following the link:

http://www.oregon.gov/ODOT/HWY/BRIDGE/standards_manuals.shtml

ODOT requires all new bridges to be designed for a two-level performance criteria as follows:

(1) 1000-year "Life Safety" Criteria: Design all bridges for a 1000-year return period earthquake (7% probability of exceedance in 75 years) under "Life Safety" criteria. To satisfy the "Life Safety" criteria, use Response Modification Factors from *LRFD Table 3.10.7.1-1* using an importance category of **"other"**.

(2) 500-year "Operational" Criteria: In addition to the 1000-year "Life Safety" criteria, design all bridges to remain "Operational" after a 500-year return period event (14 percent probability of exceedance in 75 years). To satisfy the "Operational" criteria, use Response Modification Factors from *LRFD Table 3.10.7.1-1* using an importance category of **"essential"**. When requested in writing by a local agency, the "Operational" criteria for local bridges may be waived.

Long Span Bridges: *LRFD 3.10.1* states that the seismic provisions of that manual are applicable for bridges with spans not exceeding 500 ft. For seismic design of bridges with spans exceeding 500 feet, consult with the Seismic Design Standards & Practice Engineer to discuss whether special analysis and design procedures are warranted.

Bridge Widenings: Design selected bridge portions for seismic loading as directed by the flowchart shown in *Figure 1.17.2-1A*. Design by the same criteria as for "New Bridges".

Potential Factors Affecting Seismic Performance of Bridge Widenings – The following considerations refer to the flow chart in *Figure 1.17.2-1A*. The consideration number refers to the corresponding numbered decision box on the flow chart.

Consideration 1

- Widening without adding new columns will make a bridge more vulnerable to seismic loads. Clearances for railroads or highways under structures may prevent adding new columns.

Consideration 2

- Widening on both sides will increase the potential for the new portion to be able to resist seismic loads for the full widened structure.

- Widening on one side only may actually result in a completed structure that is more vulnerable than

the original structure.

- If widening is on one side only, is there a possibility another future widening could be placed on the opposite side?

- It will not normally be practical for a widening to resist the total seismic load (existing and widening) when widening on only one side; there will be exceptions, however!

Consideration 3

- A formal seismic analysis may be required to answer this question. A “yes” answer to Consideration 3 assumes only minimal work (such as column jacketing) will be needed for the existing structure.

- Although the existing structure may have inadequate capacity, it will have some capacity that can probably be taken advantage of.

- If existing columns are not stressed beyond the elastic range they will probably not need a Phase 2 retrofit.

- The existing structure will have to go through the same deformations as the new portion even though the capacity may not be included in the seismic analysis.

Consideration 4

- Structures which are connected must have compatible deflections at connections.

- We are usually not concerned about the seismic load generated from one structure colliding with an adjacent structure; there are exceptions, however!

- Providing a joint between the widening and existing structure will probably increase the potential for the new portion to resist seismic loads. If the widening adds enough width for at least two lanes and the longitudinal joint would not be in a travel lane, a joint should be considered.

Consideration 5

- Base isolation is strongly encouraged, especially when bearing replacement is required anyway.

- When footing strengthening is required, Phase 2 will probably not be practical due to the high cost. If cost is the primary decision factor, a realistic estimate of Phase 2 retrofit cost should be prepared. Don't say it costs too much without knowing how much too much is!

- The closer footings are to the ground surface, the more practical Phase 2 will become.

Consideration 6

- If you can't see the new portion acting separately, do not waste time assuming it will!

- Widenings with only one new column per bent vs. multiple columns on the existing structure probably do not need to be modeled separately.

- When widening with 2 or more columns or with drilled shafts, it is probably reasonable to model the new structure separately.

- Consider the potential for another future widening. Perhaps size the footings larger than necessary.

Consideration 7

- Is it even possible to close the structure to replace it? Can it be replaced in stages? Is it historic?
- A new structure will usually be far superior to a "band-aided" structure.

Consideration 8

- FHWA requirements take effect when the new structure actually has more travel lanes than the existing structure. Widenings that add only shoulder width or median width are not affected. FHWA requirements may assist in convincing Region of including Phase 2 seismic retrofit, but it is not intended to force a Phase 2 retrofit when it really is not practical.
- For projects exempt from FHWA review, the Technical Services Branch Manager will approve exceptions to FHWA policy.

Consideration 9

- Region holds the money. They may have factors/priorities we don't know about.

Consideration 10

- Refusal by Region to fund the needed retrofit and refusal by FHWA to grant an exception (if federal funding) could lead to cancellation of the project.
- It would be desirable to calculate a cost-benefit ratio. Unfortunately, no guidelines are available to determine the appropriate input values.

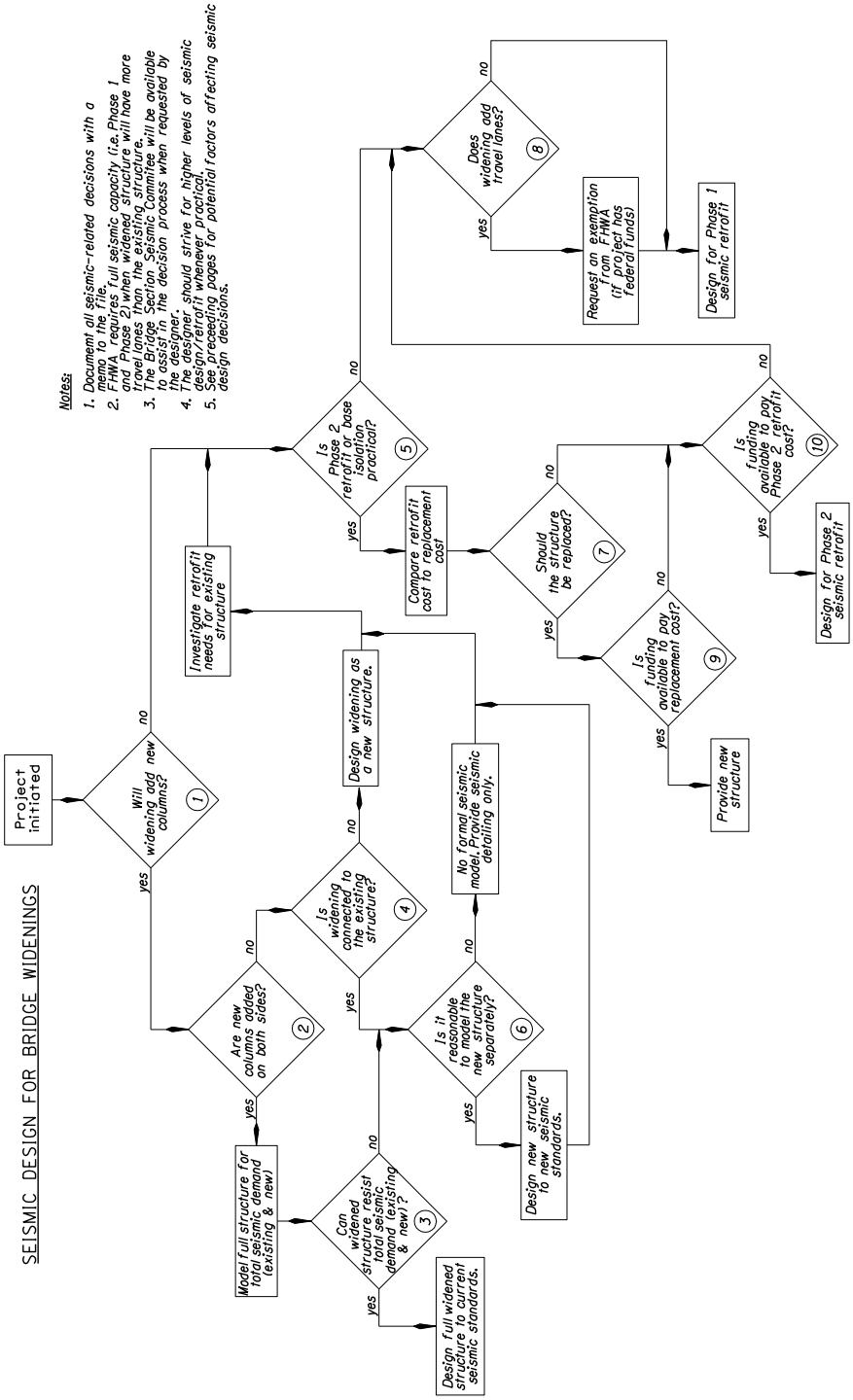

Figure 1.17.2-1A

Seismic Retrofit: There is currently no funding within ODOT solely to upgrade the seismic load resistance of selected structures. However, when the seismic retrofit design is included in a project, use a phased approach for establishing a practical and economical retrofit strategy. The publication "Seismic Retrofitting Manual for Highway Structures" (FHWA-HRT-06-032) is recommended as a reference source to supplement the Bridge Design and Drafting Manual.

The following steps are provided to help designers initiating the design process:

- Most Oregon bridges fall under importance category of "**standard**", based on the Bridge Importance Category definitions provided on FHWA-HRT-06-032. Contact Bridge HQ when this category becomes questionable for a given structure.
- Contact Bridge HQ for information on the Anticipated Service Life (ASL) of the bridge.
- Revise the top-half of the Table 1-2 of FHWA-HRT-06-032 with the following:

Table 1.17.2-1A

Minimum performance levels for retrofitted bridges

EARTHQUAKE GROUND MOTION	BRIDGE IMPORTANCE and SERVICE LIFE CATEGORY					
	Standard			**Essential**		
	ASL 1	**ASL 2**	**ASL 3**	**ASL 1**	**ASL 2**	**ASL 3**
Lower Level Ground Motion ~~50~~ 14 percent probability of exceedance in 75 years; return period is about ~~100~~ 500 years.	PL0[4]	~~PL3~~PL2	~~PL3~~PL2	PL0[4]	~~PL3~~PL2	PL3
Upper Level Ground Motion 7 percent probability of exceedance in 75 years; return period is about 1,000 years.	PL0[4]	PL1	PL1	PL0[4]	PL1	PL2

Phase 1

The Phase 1 Seismic Retrofit is considered to achieve "Life Safety" performance of Oregon bridges under seismic induced loading. Work during this phase is intended to prevent superstructure pull-off and bearing failure. This is the nature of almost all our retrofit program at this time.

Incorporate Phase 1 Seismic Retrofit on all bridge projects when bridges are located in Seismic Zone 3 or 4. Bridges located in Seismic Zone 2 may be considered for Seismic Retrofit if situated between bridges (on

the same route) that have received or are receiving Seismic Retrofit, or between new bridges built to current seismic design standards.

As a minimum, include at least Phase 1 Retrofit. Assure that the girders will not pull off longitudinally or slide off laterally from the bents. This will normally involve addition of cable restraints, shear blocks, and/or beam seat lengthening and widening.

Identify a seismic design concept which will accomplish the intent to preclude span pull off or collapse of the superstructure. Depending on the concept selected, some strengthening of the superstructure may be required to assure loads generated at the restraints or shear blocks can be transmitted without exceeding design stresses in the superstructure. For steel truss bridges, ensure all truss elements and connections provide sufficient resistance to failure or plastic deformation under seismic induced loading. Short pedestals or secondary columns above the main bent cap level must also be investigated for seismic induced loading and strengthened or braced, if necessary.

Upgrade existing bearings to elastomeric bearings, if needed to assure the designer's concept will work. Upgrading bearings to elastomeric should, also, be considered to improve seismic performance when existing bearings are known to have poor seismic performance, such as steel rocker bearings. Analysis for Phase 1 Retrofit will normally consist of a single degree of freedom model, which may be sufficient for normal bridges. However, a higher level analysis may be required, if needed to fully develop the designer's concept, or for bridges with irregular column lengths of multi-column bents or if the bents have significantly different stiffness. Use full column sections (uncracked) for this level of analysis to develop connection design loads. This is the minimum level of work that must be included. A cracked section analysis may be used to investigate the maximum anticipated movements.

Phase 2

Work during this phase involves substructure (columns, footings and foundations) ductility enhancement and strengthening. Any additional or deferred Phase 1 Retrofit work would also be included. The end product is a retrofitted bridge with as much seismic loading resistance as a new bridge would have for the site. The Phase 2 Seismic Retrofit is considered to achieve the "Serviceability" performance of Oregon bridges under the 500-year seismic induced loading.

Evaluate the structure to investigate the level of effort and scope of work needed to do Phase 2 Retrofit. Phase 2 involves a complete seismic analysis of the widened or rehabilitated bridge for full seismic loading, including consideration of strengthening or restraints to the superstructure, substructure and foundations. The work may involve column and footing strengthening or enlargement, or the use of isolation bearings, and soil improvement, if there is potential for liquefaction. The decision about whether to actually do Phase 2 Retrofit in the project will be made after developing a retrofit concept, rough cost estimate and evaluation of the relative importance of the bridge to the transportation network, in comparison to the estimated cost and available funding for the project.

The flowchart for seismic design of widenings in *BDDM 1.17.2.1* (*Figure 1.17.2-1A*) can be used as a guide to make the decision. On major, unusual or border bridges, the decision should involve discussion with Bridge Section, since seismic retrofit criteria for these structures are specific to the site.

A seismic retrofit analysis typically requires the use of a "Site Factor" to develop the response spectrum used in the analysis. Site factors are based on the soil conditions at the site, (categorized as Site Classes A - F) as described in the FHWA Seismic Retrofitting Manual for Highway Structures, Table 1-3. For most normal bridges requiring Phase 1 retrofit work the site class can be determined using either existing soils data or a general knowledge of the site geology and soil conditions. If limited knowledge is available the default designation of Site Class D is acceptable. However, for Phase 2 level retrofit analysis more detailed soils information is required to better determine the design response spectrum and also to adequately characterize and model the foundations in the analysis. Additional exploration work may be required to obtain this information. This additional work is justified due to the increased cost of Phase 2

retrofit work and the need for a more refined analysis.

Rail Upgrade, Deck Overlays, Preservations, Repair, Strengthening, and Others:

These projects should include seismic retrofit as described previously for "Seismic Retrofit".

Temporary Detour Bridges:

Design all temporary detour bridges that are expected to be in service for more than one year according to *LRFD 3.10.10*.

For all bridges that are expected to be in service for one year or less, provide the minimum support length requirements according to *LRFD 4.7.4.4*.

1.17.2.2 Specification Interpretations and Modifications

Nomenclature:

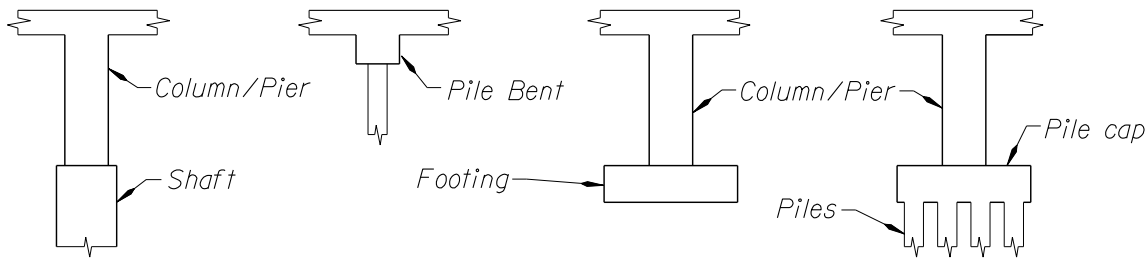

Figure 1.17.2-2A

Response Modification Factors and other Special Items:

<u>All Single Spans:</u>

- No response modification factors -- not applicable.
- Provide for connection force of: “Tributary weight” x "A_s", where $A_s = F_{pga}$*PGA, or provide the specified minimum support length according to *LRFD 4.7.4.4*.
- Free standing abutments (expansion jointed systems) are to be designed for pseudostatic Mononobe-Okabe method lateral earth forces.

<u>Seismic Zone 1:</u>

- No response modification factors -- not applicable.
- Provide for connection force of:
  $0.15*F_v$, when $A_s < 0.05$, or
  $0.25*F_v$, when $A_s \geq 0.05$, where F_v is the vertical reaction at connection, or
  provide the specified minimum support length.

Seismic Zone 2:

- Design and detail Zone 2 structures by Zone 3 and 4 criteria except for the following design provisions:

- When determining the capacity for compression-controlled sections for extreme event limit state use Resistance Factors of Φ=0.75 as specified for Zone 2 in *LRFD 5.5.4.2.1*.

- When designing the reinforcement for compression members, design in accordance with *LRFD 5.7.4.2* "Limits of Reinforcement" for Seismic Zone 2.

Zones 3 and 4:

- Columns and Piers:
  - Moment: R = 2 to 5 (*LRFD Table 3.10.7.1-1*, right column)
  - Shear: R = 1
  - Axial: R = 1

NOTE: The plastic hinging capacity should be determined from column interaction curves with axial and moment Φ values of 1.0. Enter the curve with the unfactored dead load axial force (plus any redundancy induced axial force due to lateral seismic loading), determine the accompanying moment capacity and multiply this value by 1.3. This is the plastic moment capacity.

Foundations:

- Pile Bent: Treat as columns and piers (R=5). Splices shall be designed to at least the lesser of 1.3($M_{plastic}$) for the portion above or below the splice. This splicing requirement shall not apply to full penetration welded splices.

Footing - pile cap - piles:

- Moment, shear, & axial: R = 1 (elastic analysis forces) or,
- Moment: Plastic moment capacity of the selected column.
- Shear and Axial: Value accompanying the plastic moment capacity of the column (see "Columns" above).

Other Special Items:

- Confining Reinforcement (plastic hinge zones)

  - The transverse reinforcement for confinement required in plastic hinging zone shall satisfy *LRFD equations 5.7.4.6-1, 5.10.11.4.1d-1, 5.10.11.4.1d-2, and 5.10.11.4.1d-3*.

  - Plastic zone limits shall be defined as the greatest of maximum column dimension, (column height)/6, or 18 inches.

  - Extend confining reinforcement into footing or crossbeam by the greatest of (maximum column dimension)/2, or 15 inches.

  - Maximum confining reinforcement spacing is the lesser of (the least member dimension)/4, or 4 inches.

  - Shear reinforcing meeting the detailing requirements of confining reinforcement may be considered as part of the required confining reinforcing.

Column Moment Strength Reduction Factor (Φ factor)

- Use Φ = 0.9 on checking the P-Δ Requirements as per *LRFD 4.7.4.5*.

Column Shear Strength Modifications (end regions)

- End region limits shall be defined as the greatest of maximum column dimension, (column height)/6 or 18 inches.

- If axial stress > 0.1f´c use Vc as specified in *LRFD 5.8.3*. Vary Vc linearly from normal value to 0 for axial stress between 0.1f´c and 0.

Longitudinal Reinforcement Development

- Provide anchorage development for steel stress ≥ 1.25fy.

1.17.2.3 Detailing

(1) Columns:

- For column design and reinforcement practices, see BDDM 1.11.3.

(2) Footings:

- All footings must have a top mat of bars whether or not uplift is calculated. Extend spirals at least 2 inches into top of the footing. Place the footing top mat immediately below the spiral termination. Place additional spirals below the mat (use a 6 inch spiral gap) as needed to meet the confining reinforcement layout of BDDM 1.11.3.11. Use the same spiral pitch at all locations. See the optional detail for alternate containment reinforcing in the column to footing connection in BDDM 1.11.3.10.

- Note the allowable reduction in reinforcement development length for bars enclosed within a spiral (*LRFD 5.11.2.1.3*).

(3) Crossbeams:

- Column to crossbeam connections where plastic moment capacity is required shall have spirals extending into the crossbeam in the same general manner as described above for the column-to-footing connection.

1.17.2.4 Structure Modeling

(1) Structure Modeling, General:

- Use a "first cut" analysis with fixed supports. These results will be easier to interpret than a spring supported model and will give a baseline for comparison with additional analyses. With these results, make a rough substructure design. Now a new analysis can be performed with footing springs and the substructure design checked and refined. Additional cycles of redesign, analysis, and force comparison to previous analyses could be used in some cases but generally would not be required or warranted.

- A reasonable target for a seismic design check is 20 percent. Designer and Checker should

resolve differences greater than 20 percent, but it is impractical to try to refine the design beyond that.

(2) Footing Springs:

- See *BDDM 1.10.4*.

(3) Programs:

- The Uniform Load and single mode dynamic analysis methods are acceptable for many structures (see the code limitations) but multi-mode dynamic analysis by computer may be easier. The result of any analysis method must be judged for correctness. Is the result reasonable? Reviewing the calculated periods, modal participation factors and mode shapes can greatly aid this judgment. A high level of engineering judgment will be required at all times.

- M-STRUDL, a PC program, has been ODOT's primary in-house static and dynamic analysis tool. GT-STRUDL and MIDAS can also solve dynamic problems and are available for bridge designers working at Bridge HQ or Region Tech Centers. Many design firms have adopted the use of SAP2000 or STAAD for seismic design of bridges. Other programs are also acceptable, provided the programs satisfy the analysis requirements and have been previously verified.

(4) Sample Problems:

- Sample problems are shown in the Bridge Example Design notebook, and can be downloaded at http://www.oregon.gov/ODOT/HWY/BRIDGE/standards_manuals.shtml, under Seismic Design Examples.

1.17.2.5 Footing/Pile Cap Design

(1) Piling:

- Nominal pile resistances should be used with the seismic load case (*LRFD Table 3.4.1-1*, Extreme Event-I) to determine pile requirements. Uplift resistance may be used for friction piles if the piles are properly anchored. Consult with the Foundation designer for site specific values. Piles under tension that are not capable of resisting uplift should be neglected during analysis for seismic loadings. The remaining piles must provide sufficient support and stability.

(2) Reinforcing Steel:

- Control of cracking requirements of *LRFD 5.7.3.4* do not apply to seismic load cases.

- Pile supported footings should normally have the bottom mat reinforcing above the pile tops. Footings with this scheme are preferable to thinner footings with the bottom mat detailed lower (between the piling). This is for constructability.

1.17.3 Applications of AASHTO Guide Specs for LRFD Seismic Bridge Design

1.17.3.1 General Considerations

As of 2009, ODOT has fully adopted the use of *AASHTO Guide Specifications for LRFD Seismic Bridge Design* for designing Oregon bridges subjected to earthquake loading. The following summarizes ODOT's additional requirements and deviations from the *AASHTO Guide Specifications for LRFD Seismic Bridge Design*.

Design all bridge components for full seismic loading according to the 2nd edition of *AASHTO Guide Specifications for LRFD Seismic Bridge Design*, except as modified by *BDDM 1.11.3.5 to 1.11.3.11, and 1.17.1 to 1.17.8*. Consider the load factor for the Live Load on Extreme Event Load Combination I, $\gamma EQ = 0$, unless the bridge is designated by Bridge Section as a major, unusual or unique structure. Seismic ground motion values should be based on the 2002 USGS Seismic Hazard Maps. ODOT versions of these maps are available at the ODOT Bridge Standards and Manuals web page: http://www.oregon.gov/ODOT/HWY/BRIDGE/standards_manuals.shtml. The 2002 USGS Seismic Hazard Maps and other ground motion data may be obtained from the USGS web site at the following web address: http://earthquake.usgs.gov/research/hazmaps/. The latitude and longitude of the site is needed to obtain the most precise data.

ODOT requires all new bridges to be designed for a two-level performance criteria as follows:

(1) 1000-year "Life Safety" Criteria: Design all bridges for a 1000-year return period earthquake (7 percent probability of exceedance in 75 years) under "Life Safety" criteria. To satisfy the "Life Safety" criteria, comply with the following requirements and guidelines:

Seismic Design Categories (SDC) A, B and C

- Meet all design requirements for SDC A, B and C according to the *AASHTO Guide Specifications for LRFD Seismic Bridge Design*.

Seismic Design Category (SDC) D

- Meet all design requirements for SDC D according to the *AASHTO Guide Specifications for LRFD Seismic Bridge Design*, except as modified below:
    - The maximum concrete strain in confined section of the columns (ε_{cc}) shall not exceed 90% of the ultimate concrete strain (ε_{cu}), computed by Mander's model.
    - The maximum strain of reinforcing steel shall not exceed the εRsu as defined on Table 8.4.2-1 of the AASHTO Guide Spec.
    - The maximum strain of prestressing steel shall not exceed εRps,u = 0.03

The above guidelines are applicable even for the other Seismic Design Categories, if Pushover Analysis will be used instead of the implicit equation.

(2) 500-year "Operational" Criteria: In addition to the 1000-year "Life Safety" criteria, design all bridges to remain "Operational" after a 500-year return period event (14 percent probability of exceedance in 75 years). To satisfy the "Operational" criteria, comply with the following requirements and guidelines:

Seismic Design Categories (SDC) A, B, C and D

- Verify the "Operational" performance for a 500-year return event when potentially liquefiable soils are present on site.

Seismic Design Categories (SDC) A and B

- No structural analysis is required for "Operational" criteria.

Seismic Design Category (SDC) C

- Each bridge bent shall satisfy the *equation 4.8-1* of the AASHTO Guide Spec ($\Delta^L_D < \Delta^L_C$), where Δ^L_C is determined from the *equation 4.8.1.1* of the AASHTO Guide Spec (displacement capacity for SDC B).

Seismic Design Category (SDC) D

- Meet all design requirements for SDC D according to the *AASHTO Guide Specifications for LRFD Seismic Bridge Design*, except as modified below:
    - The maximum concrete strain in confined section of the columns shall not exceed εcc = 0.005
    - The maximum strain of reinforcing steel shall not exceed 2*εsh, where εsh is defined on *Table 8.4.2-1* of the AASHTO Guide Spec.
    - The maximum strain of prestressing steel (for 270 ksi strands) shall not exceed εps,EE = 0.0086

Long Span Bridges: *Article 3.1* of the *AASHTO Guide Specifications for LRFD Seismic Bridge Design* states that the seismic provisions of this Manual are applicable for bridges with spans not exceeding 500 ft. For seismic design of bridges with spans exceeding 500 feet, consult with the Seismic Design Standards & Practice Engineer to discuss whether special analysis and design procedures are warranted.

Pedestrian Bridges: *Article 3.6* of the *AASHTO Guide Specifications for LRFD Seismic Bridge Design* states that pedestrian bridges over roads carrying vehicular traffic shall satisfy the performance criteria defined for other highway bridges. Design new pedestrian bridges over roads carrying vehicular traffic per the requirements of this section. However, pedestrian bridges that do not cross roads carrying vehicular traffic do not need be designed for the 500-year "Operational" Criteria.

Buried Structures: According to *Article 3.1* of the *AASHTO Guide Specifications for LRFD Seismic Bridge Design*, buried structures, generally, do not need be designed for seismic loads. However, for all buried structures supported on piling or drilled shafts type foundations, design the structure for seismic loading as required by this section.

1.17.3.2 Specification Interpretations and Modifications

The following items summarize ODOT's additional requirements and deviations from *AASHTO Guide Specifications for LRFD Seismic Bridge Design*:

- Design all bridges to satisfy the Type-1 Global Seismic Design Strategy (ductile substructure with essentially elastic superstructure), AASHTO Guide Spec *Article 3.3*. However, in case of a steel substructure, the bridge shall be designed according to the latest edition of the *AASHTO LRFD Bridge Design Specifications*.

  Type-2 Global Seismic Design Strategy (essentially elastic substructure with ductile superstructure) is not permitted by ODOT.

  Type-3 Global Seismic Design Strategy (elastic superstructure and substructure with a fusing mechanism between the two) can be considered upon the approval of the ODOT Bridge Section. The designer shall include a clear description of the selected Seismic Design Strategy in the appropriate Calculation Book for the structure.

- The following types of Earthquake Resisting Systems (ERS) or Earthquake Resisting Elements (ERE) provided in AASHTO Guide Spec *Article 3.3* are permissible ERS or ERE for ODOT bridges:

    - Type 1, 2, 3, 4 and 5 on *Figure 3.3-1a*
    - Types 1 2, 3, 7, 8, 9, 10, 12 and 14 on *Figure 3.3-1b*

- Obtain Agency approval before considering the application of the following types of Earthquake Resisting Systems (ERS) or Earthquake Resisting Elements (ERE) provided in AASHTO Guide Spec *Article 3.3*:

    - Type 6 on *Figure 3.3-1a*
    - Types 4, 5, 6 and 11 on *Figure 3.3-1b*
    - Types 1 and 2 on *Figure 3.3-2*

- The following types of Earthquake Resisting Systems (ERS) or Earthquake Resisting Elements (ERE) provided in AASHTO Guide Spec *Article 3.3* are not permissible ERS or ERE for ODOT bridges:

    - Type 13 on *Figure 3.3-1b*
    - Types 3, 4, 5, 6, 7, 8 and 9 on *Figure 3.3-2*
    - Types 1, 2, 3 and 4 on *Figure 3.3-3*

- Identify the ERS for bridges in SDC B (AASHTO Guide Spec *Article 3.5*) when:
  $0.25 \leq S_{D1} < 0.30$.

- Pushover analysis can be used instead of the implicit equations to determine the Displacement Capacity for SDC B and C as prescribed on AASHTO Guide Spec *Article 3.5*. However, in such a case provide SDC D Level of Detailing, regardless of what SDC the structure is designed for.

- Satisfy the balanced stiffness and balanced frame geometry requirements for all bridges in SDC C and D (AASHTO Guide Spec *Article 4.1.2 and 4.1.3*).

- Use Procedure Number 2 (Elastic Dynamic Analysis) for designing all bridges with two or more spans under seismic loading (AASHTO Guide Spec *Article 4.2*).
  Use Procedure Number 3 (Nonlinear Time History), where applicable, with Agency's approval.

- Use a Damping Ratio of 5 percent (AASHTO Guide Spec *Article 4.3.2*) on all new bridges for seismic loading. The application of the reduction factor, R_D, is not allowed without Agency's approval.

- Use Design Method 3 (Limited-Ductility Response in Concert with Added Protective Systems) for designing the lateral seismic displacement demand (AASHTO Guide Spec *Article 4.7.1*) only upon Agency's approval.

- Design Longitudinal Restrainers (AASHTO Guide Spec *Article 4.13.1*) in accordance with *BDDM 1.17.8*.

- Participation of the end panel, wingwalls, and backwalls in the overall dynamic response of bridge systems may be considered in seismic design of bridges. The provisions of *Article 5.2* of AASHTO Guide Spec may be used to determine the stiffness of abutment and wingwall backfill material in lieu of *BDDM 1.10.4.2(1)*.

- Select the Foundation Modeling Method (FMM) (AASHTO Guide Spec *Article 5.3.1*) according to *BDDM 1.10.4*. For spread footing foundations, multiply the initial stiffness (spring constant) as defined in *BDDM 1.10.4* by 2.
  Do not allow uplift or rocking of spread footings in all SDCs.

- Perform Liquefaction Assessment for all bridge sites according to *Chapter 6* of the ODOT Geotechnical Design Manual.

- Use the provisions in *Article 7.2* of AASHTO Guide Spec in conjunction with the forced-based seismic design procedure utilized in the *AASHTO LRFD Bridge Design Specification* and requirements of this section of the BDDM.

- Provide minimum shear reinforcement for bridges in SDC A, when 0.10 ≤ SD1 ≤ 0.15, according to the requirements of *Article 8.6.5* for SDC B, in addition of satisfying the requirements of AASHTO Guide Spec *Article 8.2*.

- Do not use wire rope or strands for spirals, and high strength bars with yield strength exceeding 75 ksi. Deformed welded wire fabric (AASHTO Guide Spec *Article 8.4.1*) may be used with Agency's approval.

- The same size vertical bars may be used inside and outside of interlocking spirals (AASHTO Guide Spec *Article 8.6.7*).

- Provide minimum longitudinal reinforcement (AASHTO Guide Spec *Article 8.8.2*) of 1 percent for columns in SDC B, C and D.

- Extend the vertical column bars into oversized drilled shaft according to *BDDM 1.10.5.5*, in lieu of AASHTO Guide Spec *Article 8.8.10*.

1.17.4 Liquefaction Evaluation and Mitigation Procedures

- The liquefaction potential of foundation soils will be determined by the Foundation designer. If foundation soils are predicted to liquefy, the effects of liquefaction on foundation design and performance will be provided as described in *BDDM 1.10.5*. The need for liquefaction mitigation will be in accordance with the following ODOT Liquefaction Mitigation Policy.

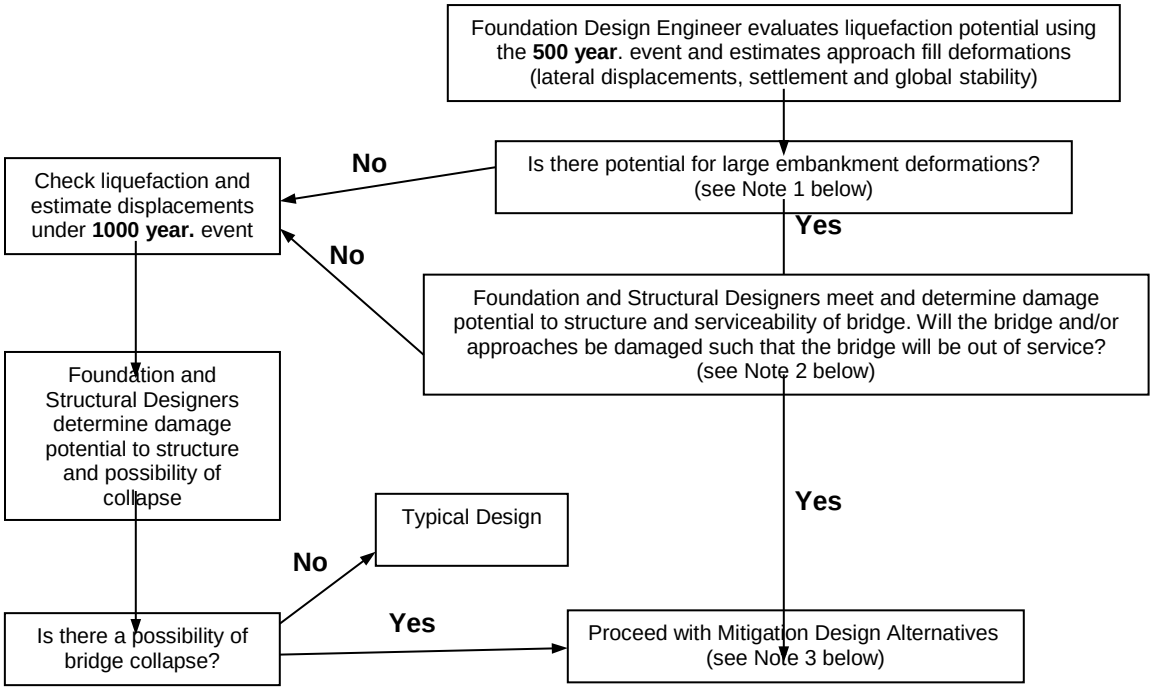

Note 1: For meeting the performance requirements of the 500 year return event (serviceability), lateral deformation of approach fills of up to 12 inches are generally considered acceptable under most circumstances pending an evaluation of this amount of lateral deformation on abutment piling. Larger lateral deformations and settlements may be acceptable under the 1000 year event as long as the “no-collapse” criteria are met.

Note 2: The bridge should be open to emergency vehicles after the 500-year design event, following a thorough inspection. If the estimated embankment deformations (vertical or horizontal or both) are sufficient enough to cause concerns regarding the serviceability of the bridge mitigation is recommended.

Note 3: Submit all liquefaction mitigation designs and cost estimates (either ground improvement or structural) to the Bridge HQ for review and approval. Refer to ODOT research report SPR Project 361: “Assessment and Mitigation of Liquefaction Hazards to Bridge Approach Embankments in Oregon”, Nov. 2002 and FHWA Demonstration Project 116; “Ground Improvement Technical Summaries, Volumes I & II”, (Pub. No. FHWA-SA-98-086) for mitigation alternatives and design procedures.

As a general guideline, the foundation mitigation should extend from the toe of the end slope to a point that is located at the base of a 1:1 slope which starts at the end of the bridge end panel:

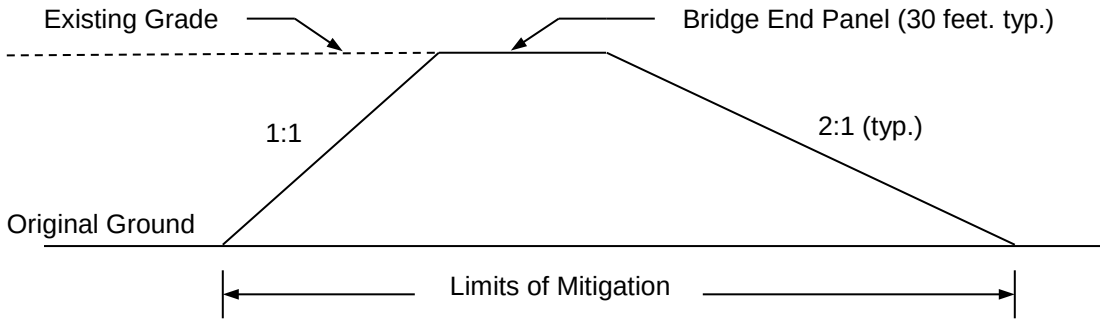

1.17.5 Costs

(1) Construction costs:- Apply the following factors to TS&L (preliminary) structure cost estimates to approximate the additional cost of seismic criteria (excluding liquefaction):

- Single Spans: 1.00
- Multiple Spans: 1.30 Irregular (widely varying columns lengths or support materials; unusual geometry or curvature)
- 1.10 Other

(2) Design costs:- Apply the following factors to TS&L (preliminary) design cost estimates to approximate the additional cost of seismic design criteria (excluding liquefaction):

- Single Spans: 1.00
- Multiple Spans: 1.20 Trestles
  1.50 Irregular (widely varying columns lengths or support materials; unusual geometry or curvature)
  1.35 Other

1.17.6 Instrumentation

Placement of accelerometers on the ground and on structure portions should be considered for large or unusual structures. The Designer and Supervisor should consult with the Seismic Design Standards and Practice Engineer to decide if this is appropriate and fits with the ODOT Seismic Instrumentation and Monitoring Program.

1.17.7 Dynamic Isolators

Isolators may be useful for either new construction or retrofit work. Isolators change structure response by lengthening the periods of primary vibration. This tunes the structure response away from the typical earthquake's maximum response frequencies. This effect, along with added damping, works to reduce the system response. The result is reduced substructure forces.

Typical steps to model an isolated structure include:

1. Compute service loads (D, L, LF, CF, W, WL, R, S and T) for the worst single girder.

2. Use these loads, and the applicable seismic loading, in the Dynamic Isolation System, Inc. (DIS) program PC-LEADER to get a preliminary isolator size and its properties. DIS has given us permission to use the program even though we will not specify only their bearing.

3. Develop a full M-STRUDL model (superstructure, substructure, and bearings/isolators). Normally this will be done on a per girder basis so the substructure should be proportioned to fit this basis. The model can often be a two dimensional model.

4. In the M-STRUDL model use the equivalent isolator stiffness (Keff). This stiffness should be further modified to fit modeling assumptions of a bearing cantilevered from the substructure at interior supports.

5. Load the M-STRUDL model with dynamic loading through a modified response spectrum. The

response spectrum can be taken from the PC-LEADER output or developed from the Guide Specification for Seismic Isolation Design.

6. Develop another full M-STRUDL model to represent the "as-is" structure. Dynamically load this model with a normal response spectrum. This gives a basis to evaluate the isolation effectiveness.

7. It may be necessary or desirable to adjust the relative isolator stiffness to better distribute the dynamic forces. It is important the final isolator properties function adequately for service loads. The isolator characteristics must also be realistic and achievable.

An example isolator modeling is given in the Bridge Example Design notebook.

Other computer programs are acceptable, provided the programs satisfy the analysis requirements and have been previously verified.

1.17.8 Seismic Restrainer Design (New Designs And Retrofits)

1.17.8.1 Seismic Restrainer Design, General

The intent is to prevent superstructure pull-off and bearing failure. Work restrainers only in the elastic range. Design the restrainer connection for 125 percent of the restrainer design force.

Note that *LRFD 3.10.9.5* requires “sufficient slack” so that the restrainer does not start to act until the design displacement is exceeded.

Restrainers may be omitted where the available seat width meets or exceeds “N” of the Design Specifications and 4 times the calculated design earthquake elastic deflection. Seat widths meeting these criteria are presumed to accommodate the large elasto-plastic movements of a real structure under seismic loading.

Design restrainers for a minimum force equal to the peak site bedrock acceleration coefficient “A” times the weight of the lighter portion being connected.

In all instances it is necessary to design or check the transfer mechanism for force transfer from superstructure to substructure (bearings, diaphragms).

1.17.8.2 Information for Restrainer Design

(1) Concrete:

Concrete bearing strength based on $0.85f''_c$ (Φ = 1.0).
Maximum increase for supporting surface wider than loaded area = 2.0.
Multiply by 0.75 when loaded area is subject to high edge stresses.

For concrete shear lugs, use *LRFD equation 5.8.4.1-1* for shear friction as outlined in *LRFD 5.8.4*.

(2) Structural Steel:

Design structural steel members using the AASHTO *LRFD Bridge Design Specifications*.

(3) Fasteners:

(Steel to Steel)

		A 307		A 325	
Diameter	Nominal Area (in^2)	Tension (0.76 x 60 ksi)	Shear (0.38 x 60 ksi)	Tension (0.76 x 120 ksi)	Shear (0.38 x 120 ksi)
0.75”	0.4418	20.1 k	10.1 k	40.3 k	20.1 k
0.875”	0.6013	27.4 k	13.7 k	54.8 k	27.4 k
1.0”	0.7854	35.8 k	17.9 k	71.6 k	35.8 k

Note: Tension loads are based on *LRFD equation 6.13.2.10.2-1*.

Shear loads are based on *LRFD equation 6.13.2.7-2* assuming one shear plane per bolt and with threads included in the shear plane.

Shear loads may be increased 25% if the threads are excluded from the shear plane.

(4) Steel Rods:

		A307 Fu = 58 ksi	A449 Fu varies	
Diameter	Stress Area (in^2)	Tension (kips) Ft=Fy=36 ksi	Tension (kips) Ft = Fy	Fy (ksi)
0.750	0.334	12.0	30.7	
0.875	0.462	16.6	42.5	92
1.00	0.606	21.8	55.8	
1.125	0.763	27.5	61.8	
1.250	0.969	34.9	78.5	81
1.375	1.155	41.6	93.9	
1.500	1.405	50.6	114.0	
1.750	1.900	68.4	110.0	58
2.250	2.500	90.0	145.0	

Tensioning of A 449 steel rods must be specified, if required by the design.
Tensioning requirements are not part of the specification as they are with A 325.
Use nominal area for elongation calculations.

(5) Wire Rope:

See *BDDM 1.21* for a complete discussion of Structural Wire Rope, Wire Rope Connections & Turnbuckles.
F_t = (0.95)(176.1 ksi)(area) = 0.95(minimum breaking strength).
Note: Yield strength is approximately equal to minimum breaking strength.

Diameter (in)	Area (in^2)	Minimum Breaking Strength (kips)	Design Load (kips)
1/2	0.119	23.9	22.7
3/4	0.268	52.9	50.2
7/8	0.361	71.6	68.0
1	0.471	93.0	88.3
1 3/8	0.906	173.0	164.0

The area values above are based on ASTM A 603. The minimum breaking strength above is based on ASTM A 1023. The design load above is based on 0.95 x the minimum breaking strength. For sizes other

than 7/8 inch diameter, ASTM A 1023 is likely to be used. For 7/8 inch A 603, the current ODOT stockpile of 7/8 inch diameter wire rope (purchased in September 2000) has been certified to 80,000 pounds. Therefore, the A 1023 loads can be used for all seismic retrofit applications. If a newer stockpile of A 603 wire rope is procured by ODOT, the actual breaking strength will need to be verified and the design load may require minor adjustment.

E for wire rope = 10,000 ksi
f_y for wire rope = 176.1 ksi

ASTM A 603 lists the E for structural wire rope as 20,000 ksi for "prestretched" wire rope. Wire rope used for seismic applications will not be prestretched, however, so an E of 10,000 ksi should be used.

(6) Resin Bonded Anchors:

See *BDDM 1.20.2*, "Drilled Concrete Anchors"

(7) Concrete Inserts:

Use hot-dip galvanized expanded coil concrete inserts with closed-back ferrule threaded to receive UNC threaded bolts.

Inserts are readily available in 1/4 inch sizes. Other sizes are only available in very large quantities. Therefore, only the standard sizes listed below are recommended.

Diameter (in)	Tension (kips) A307 or A325	Shear (kips)	
		A307	A325
3/4	12.6	7.4	12.6
1	19.3	13.4	19.3
1-1/4	34.4	21.4	34.4
1-1/2	54.3	31.0	54.3

Tension and shear capacity for concrete failure is based on equation 6.5.2 from the *PCI Design Handbook* (3rd Edition) with $\Phi = 1.0$ and with a factor of safety of 1.5. Equation 6.5.2 controls both shear and tension for shallow embedment depths. See the *PCI Design Handbook* for group effects, edge distance effects and combined tension and shear.

Tension capacity of the insert cannot exceed the tension capacity of the bolt. Shear capacity of the insert cannot exceed the shear capacity of the bolt or the insert tension capacity.

Tension capacity of the bolt = $0.76A_bf_{ub}$, where A_b = bolt stress area (*LRFD equation 6.13.2.10.2-1*).
Shear capacity of the bolt = $0.38A_bf_{ub}$ (*LRFD equation 6.13.2.7-2*).

1.17.8.3 Longitudinal Restrainer Design

(1) In-span hinges: Use the following general procedure (a modified CALTRANS method):

- Estimate restrainers to use (with elongation) and gapping desired/allowed.
- Determine joint openings (including approximate temperature movement (fall) and creep and shrinkage if appropriate).
- Determine frame stiffness and capacity.
- Determine adjacent frame stiffness and capacity.
- Plot force/deflection relationship considering component stiffnesses, joint openings (including temperature, creep, and shrinkage openings), and restrainer gapping.
- Assume a final force and deflection under single-mode response to get equivalent stiffness.
- Calculate period and resulting response coefficient.
- Calculate dynamic force and locate on the force/deflection curve.
- Review that the force capacity of the system is not exceeded, the assumed/acceptable deflection is not exceeded, and the equivalent stiffness and period are approximately as before.
- If checks are not okay modify system and recycle through as needed.

(2) Bents with superstructure continuous over the bent:

- Connect superstructure to substructure with capacity to form plastic hinging in the column(s).

(3) Bents with only the deck continuous over the bent:

- Connect each span to substructure to form plastic hinging in the column(s).

(4) Bents with no superstructure continuity over the bent:

- With frames each side of bent:

  Connect each span to substructure to form plastic hinging in the column(s). Also connect adjacent superstructure portions by the same techniques as “in-span hinges.” The adjacent super-structure portions may be connected by span to substructure connections of adequate capacity to function for both portions.

- With simple spans each side of bent:

  Connect each span to the substructure to form plastic hinging in the column(s).

NOTE: The plastic hinging capacity should be determined from column interaction curves with axial and moment Φ values of 1.0. Enter the curve with the unfactored dead load axial force (plus any redundancy induced axial force due to lateral seismic loading), determine the accompanying moment capacity and multiply this value by 1.3. This is the plastic moment capacity.

1.17.8.4 Transverse Restrainer Design

(1) In-span hinges:

- Design for force transfer of 2.5(A)(supported dead load).

(2) Bents with superstructure continuous over the bent:

- Connect supported spans with force to form a failure mechanism (plastic hinging at the top of frame (column or crossbeam) and plastic hinging at bottom of column.

(3) Bents with only the deck continuous over the bent:

- Connect supported spans with force to form a failure mechanism (plastic hinging at the top of frame (column or crossbeam) and plastic hinging at bottom of column.
- Prorate design force to ahead and back side of bent by dead load ratio.

(4) Bents with no superstructure continuity over the bent:

- Connect supported spans with a force equal to 2.5(A)(supported dead load).

NOTE: The plastic hinging capacity should be determined from column interaction curves with axial and moment Φ values of 1.0. Enter the curve with the unfactored dead load axial force (plus any redundancy induced axial force due to lateral seismic loading), determine the accompanying moment capacity and multiply this value by 1.3. This is the plastic moment capacity.

1.17.8.5 Hold-downs

Hold-downs or bearing replacement may be needed at vulnerable bearings such as fixed or rocker type steel bearings.

1.17.8.6 Use of State Stockpile Wire Rope (Cable) for Seismic Retrofit

To achieve economy and supply stability, Bridge Engineering Section has purchased a quantity of structural wire rope (cable) to be used on future seismic retrofit projects. The wire rope is stockpiled in Portland. Before using stockpile wire rope, contact the Bridge Operations & Standards Managing Engineer, Bridge Engineering Headquarters to verify availability. See *BDDM 1.21* for general notes and special provisions to be used with the stockpile wire rope.

For projects requiring quantities beyond the available stockpile, contact the Bridge Operations & Standards Managing Engineer to discuss whether an additional quantity of wire rope can be purchased.

1.18 FRP COMPOSITES

Outline:

1.18.1 FRP Composites

1.18.1 FRP Composites

(Reserved for future use)

1.19 (RESERVED)

1.20 CONCRETE ANCHORS

Outline:

1.20.1 Anchor Bolts

1.20.2 Drilled Concrete Anchors

1.20.1 Anchor Bolts

1.20.1.1 Materials

Anchor bolts, including those for bridges, signs, traffic signals, and illumination structures, should normally be specified according to one of the following specifications:

AASHTO M314 is the preferred specification.

- AASHTO M314, Grade 36 for low-strength
- AASHTO M314, Grade 55 for medium-strength
- AASHTO M314, Grade 105 for high-strength

Equivalent ASTM designations for anchor bolts are:

- ASTM A307 - Low-strength carbon steel bolts for general use (non-headed rods conform to ASTM A36)
- ASTM A449 - Medium carbon steel bolts and rods to 3 inch diameter. Proof load requirements are similar to ASTM A325.

Galvanize anchor bolts or rods full length, if galvanizing is desired.

Anchorage of anchor bolts and rods may be accomplished by hooks for ASTM A307 and Grade 36 materials. For higher strength materials, a bearing plate tack welded to a nut or a plate between two nuts should be used.

If tensioning of anchor rods or bolts is desired, load indicator washers may be used up to 1-1/4 inch diameter (the largest available). Load indicator washers must be called out on the plans or in the Special Provisions, if you want them used. Recognize that concrete creep and shrinkage may significantly reduce anchor rod stress over time.

1.20.1.2 Anchor Bolt Sleeves

To allow for some flexibility in placement and small corrections in bearing locations, an anchor bolt sleeve is often used. The anchor bolt can be field bent slightly to fit the required bearing location. The bearing plate can be temporarily shimmed and then the pad constructed or the pad can be constructed with a blockout around the bolt. The sleeve is grouted at a later time. There are commercially produced anchor bolt sleeves or a fabrication detail can be added to the drawings.

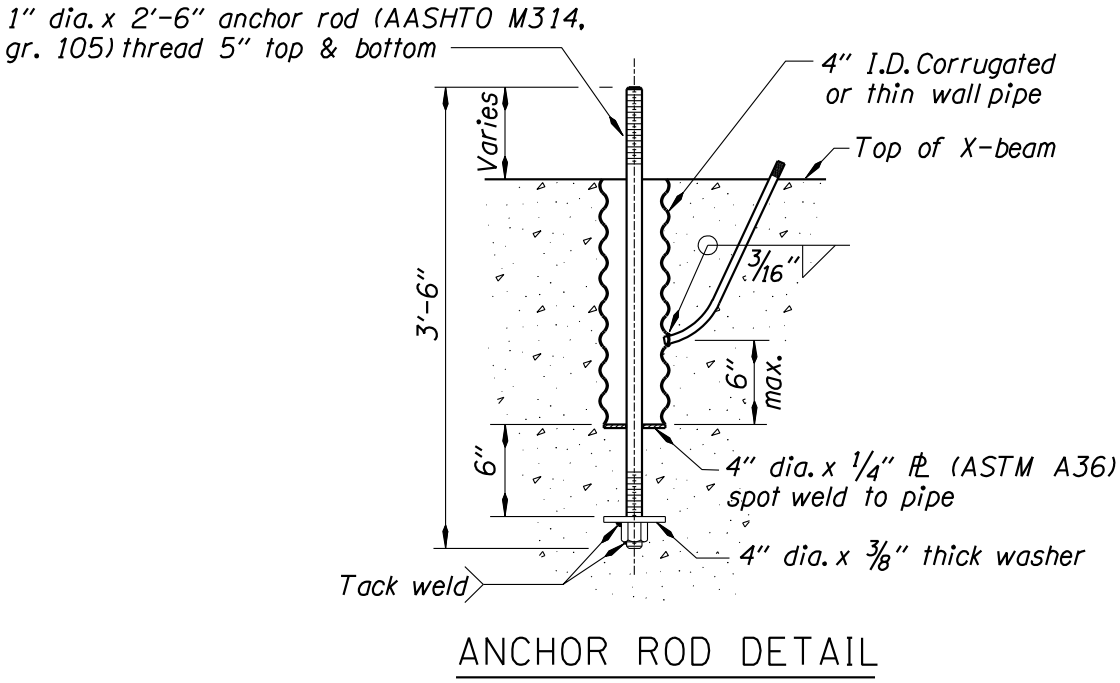

Figure 1.20.1.2

1.20.2 Drilled Concrete Anchors

1.20.2.1 Materials

Anchors - Normally specify AASHTO M314, which is an anchor bolt material. ASTM specifications may be substituted as follows:

AASHTO Specifications	ASTM Specifications
M314,Grade 36	A307 or F1554
M314,Grade 55	F1554
M314,Grade 105	A 193(Grade B7),A449 or F 1554
M 31 Rebar,Grade 60	A 706 or A 615

- Galvanizing is only required if portions of the anchor are exposed.
- Anchor rods do not necessarily need to be fully threaded. Specify the thread length to best fit the particular application.

Bonding material - Use a resin bonding system from the Division's QPL for anchor bolts 1 inch diameter or less. For larger anchors, use other types of anchorage such as epoxy grout or cementious grouts with traditional development lengths.

For Grade 36 and Grade 55 anchors, use a "low strength" or "high strength" resin.

For Grade 105 anchors and reinforcement, use "high strength" resin.

1.20.2.2 Design

Design the steel portion (rod or reinforcement) of the concrete anchor according to the appropriate AASHTO design specification.

	Fasteners	Reinforcement
Service Load Design	Art. 10.32.3	Art. 8.15.5.4
Load Factor Design	Art. 10.56.1	Art. 8.16.6.4
LRFD Design	Art. 6.13.2.10	Art. 5.8.4

Anchors - Diameters and Stress Areas			
Diameter (in.)	Stress Area (in²)	Bar Size	Stress Area (in^2)
0.5	0.142	4	0.20
0.625	0.226	5	0.31
0.75	0.334	6	0.44
0.875	0.462	7	0.60
1.00	0.606	8	0.79
1.125	0.763	9	1.00
1.25	0.969	10	1.27

Figure 1.20.2.2A

Do not use resin-bonded anchors for overhead or other permanent applications with significant sustained tension. This policy change is to bring ODOT into compliance with an October 17, 2007 FHWA technical advisory in response to the July 2006 tunnel ceiling collapse in Boston. ODOT also has additional concerns with use of any epoxy anchors for overhead applications. Therefore, use mechanical anchors or other methods for all overhead applications and other applications with sustained tension. Significant sustained tension is defined as a sustained tension loading greater than 10 percent of the ultimate tension capacity of the anchor.

Design the resin portion of the concrete anchor according to the following:

General Equation for Resin Tension Capacity

Ultimate tension capacity = $R_0 * R_1 * R_2 * \pi * D * E * [U(max) - (35\ lb/in^3 * E)]$
where:

π = Pi = 3.14159
D = anchor diameter (inches)
E = anchor embedment (inches)
U(max) = 1400 psi for “low strength” resin
= 2300 psi for “high strength” resin

R_0 = reduction factor for non-redundant applications. This applies when anchors are used with only two anchors per attachment.
R0 = 0.85 for non-redundant horizontal applications
R0 = 1.0 for all other applications

R1 = reduction factor due to edge distance
R_1 = 0.6 when edge distance = 0.5 * E
R1 = 1.0 when edge distance ≥ 1.5 * E

R2 = reduction factor due to anchor spacing
R2 = 0.7 when anchor spacing = 0.5 * E
R2 = 1.0 when anchor spacing ≥ 1.0 * E

When rebar is anchor material, add 2 times the anchor diameter to the required anchor embedment. This extra embedment is necessary for rebar since the exact location of rebar deformations cannot be known. Most of the tension load in a rebar anchor is transferred to the concrete at the deformation location. For this reason fully-threaded anchors are generally preferred for most resin-bonded anchor applications.

For horizontal applications, add 20 percent to the required anchor embedment. This extra embedment is necessary since full resin coverage cannot be assured for horizontal applications. Horizontal applications angled down a minimum of 15 degrees do not require the additional 20 percent.

Resin Tension Equation: Service Loads

Ultimate tension capacity ≥ 3 * design tension load

Resin Tension Equation: Seismic Loads

Ultimate tension capacity:
≥1.9 * design seismic load for “low strength” resin
≥1.6 * design seismic load for “high strength” resin

Note: for seismic loading, maximum rod loading ≤ 0.9 Fy
Fy = Yield strength of the anchor rod

Resin Tension Equation: LRFD Loads

0.5 * Ultimate tension capacity ≥ factored load

<u>General Equation for Resin Shear Capacity</u>

Ultimate Shear Capacity = $R_1 * R_2 * \lambda * D * E * f'c$
where:

R1 = reduction factor due to edge distance
R1 = 0.5 when edge distance = 0.5 * E
R1 = 1.0 when edge distance ≥ 1.5 * E

R2 = reduction factor due to anchor spacing
R2 = 0.7 when anchor spacing = 0.5 * E
R2 = 1.0 when anchor spacing ≥ 1.0 * E

λ = 0.75 for “low strength” resin
= 1.0 for “high strength” resin

D = anchor rod diameter (inches)
E = anchor rod embedment (inches)
f'c = compressive strength of concrete

Note: If concrete for an existing structure appears to be in good condition, use f'c = 1.2 times the concrete strength shown on the existing plans.

Resin Shear Equation: Service Loads

Ultimate shear capacity ≥ 3 * design shear load

Resin Shear Equation: Seismic Loads

Ultimate shear capacity ≥ 1.7 * design seismic shear load

Resin Shear Equation: LRFD Loads

0.5 * Ultimate shear capacity ≥ factored load

<u>Combined Resin Tension and Shear</u>

Combined Stress Ratio (CSR) ≤ 1.0

$CSR = (f_t / F_t) + (f_v / F_v)^2$

f_t , f_v = factored loads (i.e., the right side of service load, seismic, or LRFD equations)

F_t , F_v = capacities (i.e., the left side of service load, seismic, or LRFD equations)

1.20.2.3 Drilling Holes in Concrete

If existing reinforcing steel is required by design, require bars to be located prior to drilling.

Spalling of adjacent concrete is the main concern when determining the hole location and type of drill to be used.

<u>Resin Bonded Anchors</u>

Center of hole is 6 inches or less from the edge of concrete

- Use either a diamond bit core drill or a carbide bit rotary hammer with four cutting edges on the diameter.

Center of hole is more than 6 inches from the edge of concrete

- Use either an air hammer, maximum 9 pound class, or a carbide bit rotary hammer with two cutting edges on the diameter.

<u>Mechanical Anchors</u>

- Use either a diamond bit core drill or a carbide bit rotary hammer with four cutting edges on the diameter.

<u>Grouted Anchors</u>

- Any type of drill will normally be acceptable. Grouted anchors should always be placed more than 6 inches from the nearest concrete edge.

1.20.2.4 Plan Details

Resin bonded anchors should have the following note on the plans:

> Concrete anchors will be ____diameter Grade (36, 55 or 105) (high or low) strength resin bonded anchors. The minimum pullout strength shall be ___ lb. with a minimum embedment of _____ in. Install anchors according to the manufacturer's directions and the Special Provisions.

[For anchors using Grade 60 rebar, modify the first line to read:]

> #__ drilled anchor bars will be resin bonded M 31, Grade 60 rebar.

Construction

Drill types - See *BDDM 1.20.2.3* or *SP 00535* for the drill type to be used.

Holes - Holes for resin bonded anchors are normally 1/8 inch diameter larger than the nominal bolt diameter. Holes should be cleaned with compressed air, a non-metallic brush and water. Concrete dust is one of the most destructive elements to a resin bonded system and water is the best method to remove the dust. Holes for grouted anchors are normally 1/4 inch diameter larger than the anchor diameter.

Temperature - Epoxy resin is not allowed for low temperature applications. The set times become quite long at low temperatures. It will normally be better to use a deeper embedment with a non-epoxy product at low temperatures. Note that "high strength" resins will normally be epoxy.

Tightening – *SP 00535* requires tightening to only 1/4 turn past snug tight. Consider what tightening is appropriate for the application and show on the plans, if different than the specifications. Anytime load indicator washers are used, tightening must meet the washer requirements. Also check if distribution plates are needed to transfer the bearing loads (from the tensioned bolt) to the concrete.

1.21 STRUCTURAL WIRE ROPE (CABLES) AND TURNBUCKLES

Outline:

1.21.1 Structural Wire Rope (Cables) and Turnbuckles, General

1.21.2 General Notes for Structural Wire Rope, Turnbuckles and Connections

1.21.3 Special Provisions for Wire Rope

1.21.4 Special Provisions for Turnbuckles and Socket Connections

1.21.5 Design Properties

1.21.1 Structural Wire Rope (Cables) and Turnbuckles, General

Structural wire rope (cable) may be used in seismic retrofit and safety cable applications. For these applications, structural wire rope must have zinc coating for corrosion protection. ASTM A 603 structural wire rope with a Class C coating is the preferred wire rope specification. This wire rope has large wires and significant zinc coating. However, A 603 wire rope is only available by special order at a minimum of 10,000 feet.

ODOT currently has a stockpile of 7/8 inch diameter A 603 wire rope that is available for use on seismic retrofit applications (see *BDDM 1.17.8.6*). The stockpile material was purchased as part of the Willamette River (Abernethy) Br. (Seismic Retrofit) Section (Contract No. 12349). The wire rope was received at the District 2B Lawnfield facility in Clackamas on September 19, 2000. As of October 2009, 2500 feet of the stockpile wire rope was still available.

Use A 603 wire rope for all coastal seismic retrofit applications. If there is not sufficient quantity of wire rope available in the stockpile, a new order of 10,000 feet should be purchased using project funds. Such a purchase will require preapproval from FHWA since the excess wire rope will be stockpiled for use on future projects.

For non-coastal applications, A 603 wire rope is still preferred. However, ASTM A 1023 wire rope can be used where less corrosion protection is considered acceptable. A 1023 wire rope uses smaller wires and has approximately one-third the zinc coating compared to A 603. However, A 1023 wire rope is readily available on the market and so does not need to be stockpiled. Optional sizes of A 1023 wire rope are also readily available. Those sizes are listed in *BDDM 1.21.5*.

A 603 and A 1023 are the only wire rope specifications recommended for seismic retrofit applications. Other types of wire rope investigated are ASTM A 586 and ASTM A 741. A 586 wire rope is used for high-strength structural tension members, but is not readily available on the market. A 741 wire rope is used for safety barrier applications (such as I-5 median between Portland and Salem). A 741 has less strength compared to A 603 and A 1023, is difficult to make swaged connections, and is also not readily available.

7/8 inch diameter wire rope is recommended for most seismic retrofit applications. 1/2 inch diameter wire rope is recommended for safety cable applications and seismic retrofit applications where the wire rope must be wrapped around tight corners. Bending radius for A 603 wire rope should be as follows:

Wire Rope Diameter (in)	Suggested (in)	Minimum (in)
1/2	18	11
7/8	32	18

ASTM A 1023 wire rope can be bent to a slightly smaller radius:

Wire Rope Diameter (in)	Suggested (in)	Minimum (in)
1/2	13	9
3/4	19	13
7/8	23	15
1	26	17
1-3/8	35	24

The bending radius values above are based on a 1997 Bethlehem Wire Rope product catalog from Williamsport Wirerope Works, Inc.

1.21.2 General Notes for Structural Wire Rope, Turnbuckles and Connections

Use the following general notes on the plans for structural wire rope in seismic retrofit applications using the 7/8 inch diameter wire rope from the ODOT stockpile:

> Zinc-coated 7/8 inch diameter structural wire rope for seismic restraint devices will be provided by the Agency.

Use the following general notes on the plans for structural wire rope in seismic retrofit and/or safety cable applications using ASTM A 1023 wire rope:

> Provide zinc-coated X” (1/2”, 3/4”, 7/8”, 1” or 1 3/8”) structural wire rope for seismic restraint devices (and/or safety cables) according to ASTM A 1023.

Use the following general notes on the plans for turnbuckles and wire rope connections in seismic retrofit and/or safety cable applications:

> Provide hot-dip galvanized turnbuckles according to ASTM F 1145.

> Provide hot-dip galvanized socket connections. Ensure socket connections can develop the minimum breaking strength of the connecting wire rope.

1.21.3 Special Provisions for Wire Rope

Under the heading "Structural Wire Rope for Seismic Restraints & Safety Cables" use the following:

[When using 7/8 inch wire rope from the ODOT stockpile for seismic retrofit:]

Zinc-coated 7/8" diameter structural wire rope for seismic restraint devices will be provided by the Agency. Agency provided wire rope was manufactured according to ASTM A 603 with Class C coating. Wire rope construction is 6 x 7 with a Wire Strand Core (WSC). Agency provided wire rope has been previously certified to meet a minimum breaking strength of 71,600 pounds. Wire rope is stored on spools with up to 2500 feet on each spool.

Agency provided wire rope is stored at the following location:
c/o District 2B Manager
Oregon Department of Transportation
9200 SE Lawnfield Rd
Clackamas, OR 97015
Phone: 971-673-6200

Notify Bridge Engineering Headquarters of the quantity of wire rope removed within 24 hours. Follow up this notification with a written memo documenting the time of removal, quantity removed (to the nearest foot), and the project for which it will be used. Send the memo to:

Bridge Operations & Standards Managing Engineer
Bridge Engineering Headquarters
4040 Fairview Industrial Drive SE, MS #4
Salem, OR 97302-1142
Phone: 503-986-3323
FAX: 503-986-3407

The quantity of wire rope included for use in this project, including both testing and installation, is (____) linear feet. This quantity of wire rope will be provided at no cost to the Contractor. Additional wire rope required by the Contractor due to fabrication errors and/or waste must be purchased from the Department at the Department's cost as established by the Engineer.

[When using ASTM A 1023 wire rope for seismic retrofit:]

Provide zinc-coated X" (1/2", 3/4", 7/8", 1" or 1 3/8") diameter wire rope for seismic restraint devices according to ASTM A 1023. Provide 6 x 19 wire rope construction with a steel core. Manufacture wire rope from extra improved plow steel. Ensure a minimum breaking strength of XX,XXX pounds (insert appropriate strength from design properties in *BDDM 1.21.5*).

[When using 1/2 inch wire rope for safety cable:]

Provide zinc-coated 1/2" diameter structural wire rope for safety cable according to ASTM A 1023. Provide 6 x 19 wire rope construction with a steel core. Manufacture wire rope from extra improved plow steel. Ensure a minimum breaking strength of 23,900 pounds.

1.21.4 Special Provisions for Turnbuckles and Socket Connections

Use the following special provisions for turnbuckles and/or socket connections in seismic retrofit and/or safety cable applications:

Provide Type 1 hot-dip galvanized turnbuckles according to ASTM F 1145.

- Ensure turnbuckles develop the minimum breaking strength of the connecting wire rope.
- Provide turnbuckles with a 24 inch take-up unless shown otherwise.
- Test turnbuckles according to the requirements outlined in ASTM A 1023.
- For seismic restraint devices, provide either a jam nut or lock wire at each end of each turnbuckle. For safety cables, provide lock wire at each end of each turnbuckle. Provide 14 gage or heavier lock wire that is either hot-dip galvanized or plastic coated.

Testing for Socket Connections – Select an independent laboratory to test three sets of wire rope assemblies. Provide approximately 3 foot segments of wire rope with galvanized stud attachments at each end. Provide stud attachments of similar size and material as to be used on the project. Test each wire rope assembly to failure in tension. Ensure the tested wire rope assembly develops the minimum breaking strength of the wire rope and ensure that failure does not occur in the connecting parts. Ensure all three wire rope segments meet the minimum breaking strength requirement. However, if the wire rope breaks at a load less than the minimum breaking strength of the wire rope and at a location at least 6 inches from a connection, that test will be disregarded. If any wire rope assembly fails to meet these requirements, except as noted above, revise the connection details and prepare and test three new wire rope assemblies.

1.21.5 Design Properties

Modulus of elasticity for wire rope (non-prestretched) = 10,000 ksi.

Approximate gross metallic area and minimum breaking strength for wire rope:

Wire Rope Diameter (in)	Area (in^2)	Strength (lb)	Weight (lb/ft)
1/2	0.119	23,900	0.46
3/4	0.268	52,900	1.04
7/8	0.361	71,600	1.41
1	0.471	93,000	1.85
1-3/8	0.906	173,000	3.49

Area values above are approximate and are based on ASTM A 603. Minimum breaking strength and weight values above are based on ASTM A 1023. Note that A 1023 does not provide area values. Weight values for A 603 are slightly smaller.

The sizes of ASTM A 1023 zinc-coated wire rope shown above are readily available from northwest suppliers.

1.22 (RESERVED)

1.23 BRIDGE END PANELS, AND SLOPE PAVING

Outline:

1.23.1 Bridge End Panels and Supports

1.23.2 Slope Paving/Railroad Slope Protection

1.23.1 Bridge End Panels and Supports

Provide reinforced concrete bridge end panels for bridges.

Show the general outline of end panels on the bridge plans with reference to the panel details shown on Bridge Standard Drawings or detail plans.

Bridge end panel supports:

- Detail ledges or other methods of support for all bridges (even if end panels are not called for when the bridge is built).
- For bridges with sidewalks and no end panels, provide a method of supporting approaching sidewalks at the bridge ends (present or future).

The required width of the end panel depends on the following considerations:

- If the approach rail is a flex-beam rail, provide an end panel width of inside face to inside face of the flex-beam rails at the end of the bridge. If the rail posts are attached to the side of the panel, the end panel width is the distance between inside faces of the rail posts.
- Where the approach rail is concrete barrier, support the barrier by the end panel and provide an end panel width equal to the out-to-out dimension of the barriers at the end of the bridge. Add 1 foot each side to the end panel width where the barriers are precast.
- Supporting barriers on wingwalls (rail cast with wingwall) is not recommended because water leaks into the subgrade along the wall.

Use a nominal end panel length of 30 feet if any of the following conditions exist:

- On interstate highways and all other state highways with 20-year projected ADTT > 1000.
- When end bents are skewed > 30 degrees.
- When abutment depth is > 20 feet (from bottom of footing or cap to top of deck).
- When end fills have an anticipated post-construction settlement > 1 inch.

Use a nominal end panel length of 20 feet when none of the above conditions are satisfied.

When widening a bridge with existing end panels, use the same end panel length for the new portion as the existing. Connect the new end panel segment to the existing with dowels.

> Note: ADTT = ADT x %trucks. The 20-year ADT volume should be in the project prospectus. The %trucks can be determined from data from the nearest Permanent Automatic Traffic Recorder (ATR) station. This information is kept by the Transportation Data Section under the Transportation Development Division and can be found at the following website:
>
> http://www.oregon.gov/ODOT/TD/TDATA/pages/tsm/tvt.aspx

From this website, go to "Permanent Automatic Traffic Recorder Stations (ATR's) Trend Summaries" and select the latest year.

If a prospectus is not available, if the 20-year ADT is not shown, or if an appropriate ATR cannot be found, contact the Project Leader or Contract Administrator.

Use an asphalt concrete wearing surface (ACWS) on the end panel when the approach is asphalt concrete. If the end panel settles, compensating overlays can be easily feathered onto the existing ACWS. Call out the concrete strength of end panels in the General Notes.

End panels may be excluded under certain unique conditions. When considering to exclude end panels, submit a request for a design deviation according to *BDDM 1.2.2* at the TS&L milestone. Include a geotechnical and structural evaluation as supporting documents to the design deviation.

1.23.2 Slope Paving/Railroad Slope Protection

Generally, where a roadway passes under a bridge, provide slope paving on the bridge end fill according to Bridge Standard Drawing *BR115*. Also, consider slope paving where a bridge crosses over a sidewalk or park.

For a highway bridge crossing over a railroad, rock slope protection may be required on the end fill slope under the bridge.

1.24 BRIDGE DRAINAGE

1.24.1 General, Bridge Drainage

1.24.2 Standard Design/Drawing/Details

1.24.3 Selection Guidance

1.24.4 Design Code Guidance

1.24.5 Design Guidance & Lessons Learned

1.24.6 Detailing

1.24.7 Construction

1.24.1 Deck Drainage

Some form of drainage system is normally needed on or adjacent to bridges that have curbs or concrete parapet rails. The Roadway Plans drainage details should be carefully reviewed. If drains are required, the Hydraulics Unit will do the design and determine the size and spacing. The Hydraulics Designer will need the bridge length, deck grades, cross-slope, typical section, and deck surface to determine the deck drain layout.

Normally, drainage retrofitting needs to be addressed only when the project involves a major rehabilitation of the bridge. Generally, retrofitting existing bridges from a 'direct discharge' to a piped system is not necessary. Bridge widening normally can use the same type of drainage system as the existing bridge.

1.24.2 Standard Design/Drawing/Details

DET 3120

(1) Design Goals – Provide a "hole" thru the bridge deck to pass water.

(2) Design Criteria – [note criteria here]

(3) Design Assumptions – [note assumptions here]

(4) Use Guidance / Notes to Designers – [note guidance here]

1.24.3 Selection Guidance

None.

1.24.4 Design Code Guidance

None.

1.24.5 Design Guidance & Lessons Learned

Special environmental considerations may be required on some projects (see Environmental BDDM 3.14.8). Hydraulic requirements take precedence over water quality requirements (see Storm Water BDDM 3.14.9).

Capture drainage upslope of the bridge in inlets before coming onto the bridge. When grades allow, carry drainage off the bridge to inlets. Drainage not carried to inlets at the ends of the bridge is removed from the bridge deck using drains.

Drains are not allowed to discharge directly into designated water quality limited streams; streams with severe non-point source pollution problems; or streams with populations of listed, proposed or candidate threatened and endangered species of fish or other aquatic life. In this case provide a piping system that carries the drainage to a storm water collection swale or other dispersal system.

When these conditions are not present direct discharge to the ground below may be allowed. Drainage directly discharged to the ground below is not to cause erosion or be a hazard to the public. To prevent exposure of the superstructure to the drainage, it should be carried by drain pipes to 3" below the bottom of the superstructure.

In all cases, the Bridge Designer is to coordinate with the Project Team members representing Environmental and Storm Water to determine the appropriate bridge drainage system.

1.24.6 Detailing

Provide minimum 8" diameter galvanized steel drain pipe.

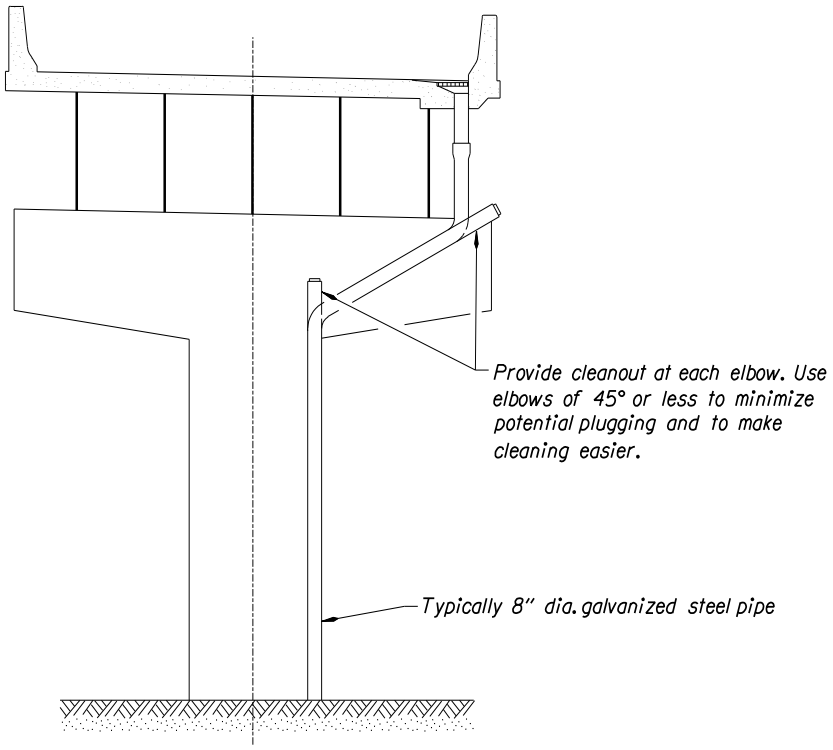

Figure 1.24.1A

Present seismic design requirements for concrete containment within columns precludes placement of drain pipes within columns.

Deck drains and drain pipes become easily clogged and are a continual maintenance problem. High pressure hoses used for cleaning cannot make 90 degree turns. For 90 degree pipe connections, use 2-45 degree connections or a 4 foot minimum radius sweeping 90 degree connection. Add clean-out ports or junction boxes at every 90 degree connection. Clean-outs should be at a 45 degree angle to the main line.

The Bridge Designer must verify that the gutter profiles do not result in "birdbaths" or unsightly dips in the rail. If there is a question, plot the gutter grade.

Place drains upslope from expansion joints to capture drainage before it reaches the joints.

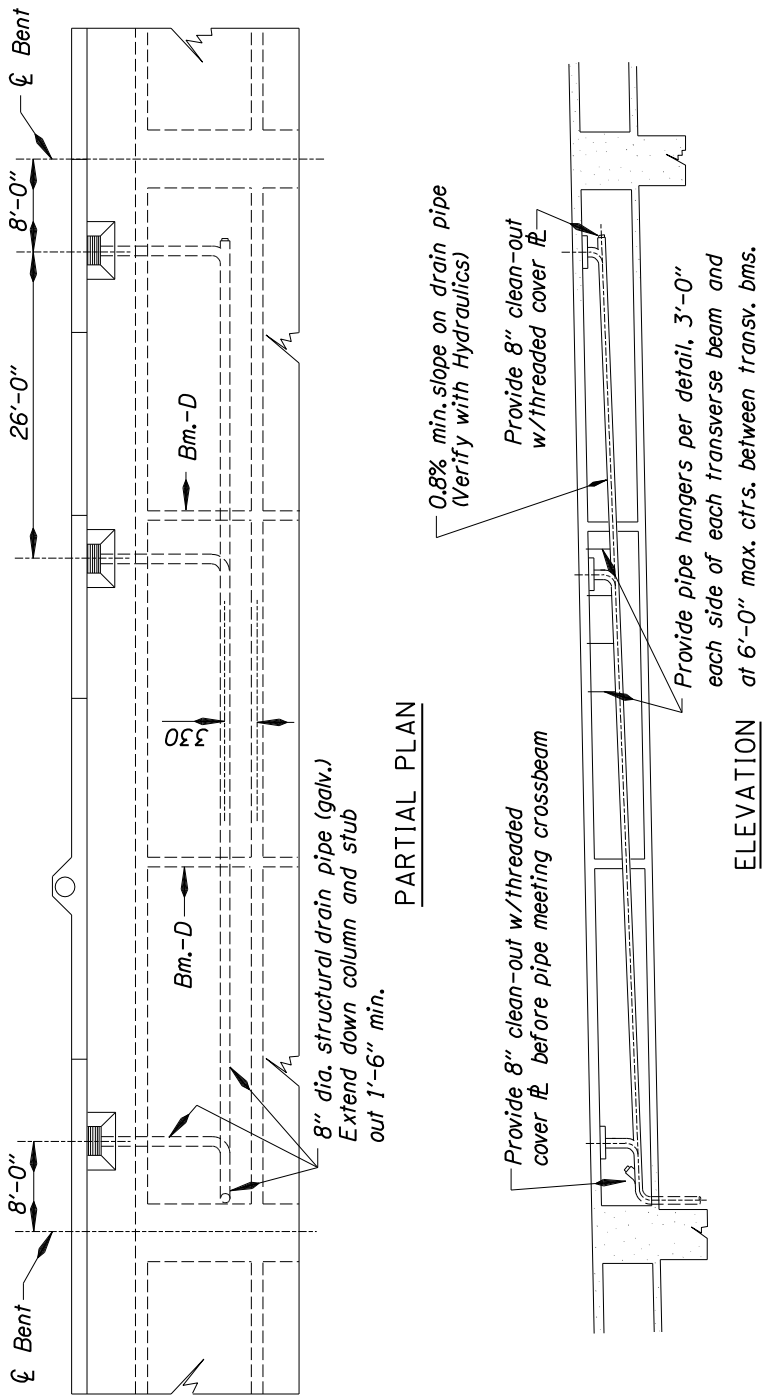

Figure 1.24.1B

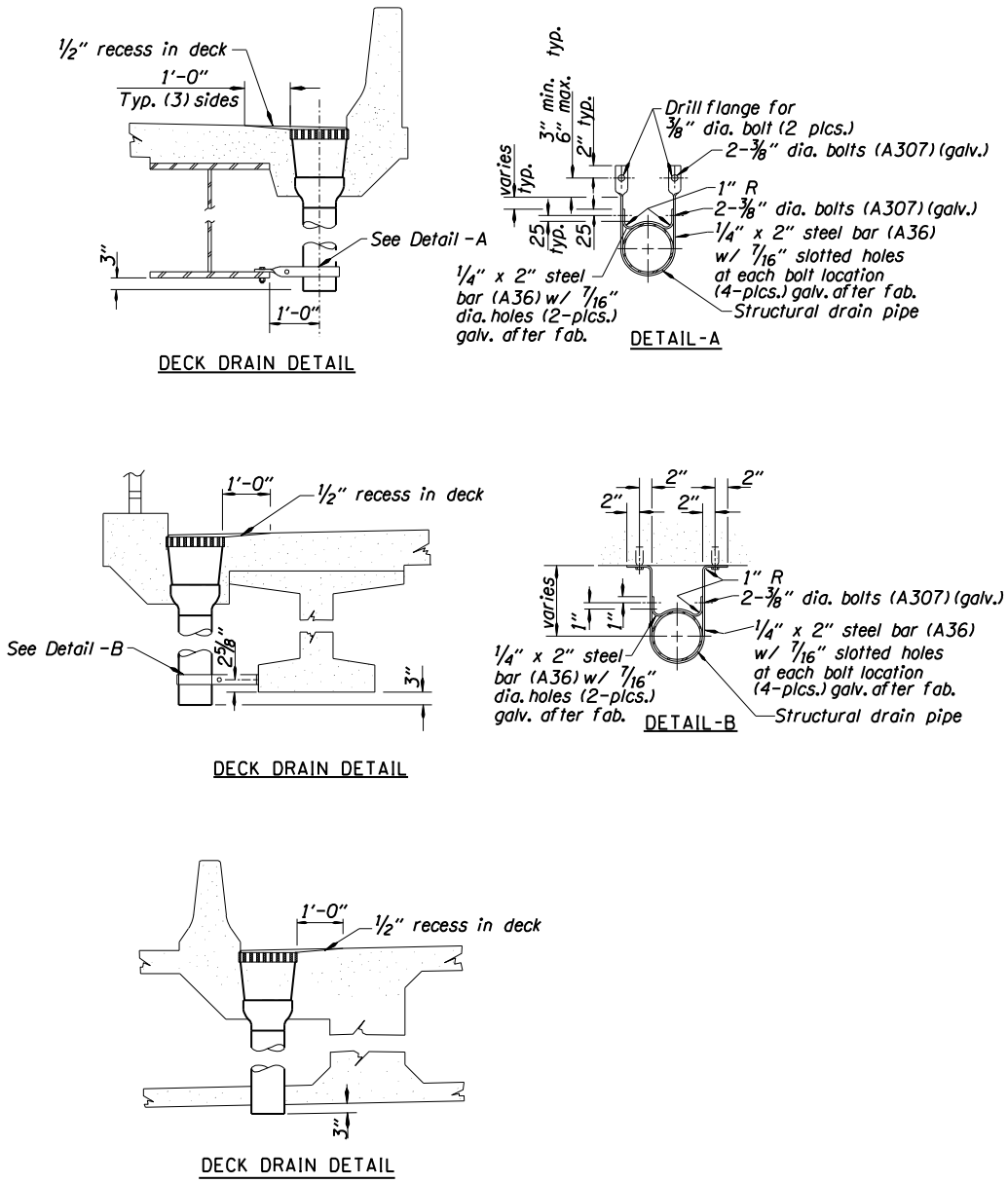

Figure 1.24.1C

1.24.7 Construction

None.

1.25 (RESERVED)

1.26 CORROSION PROTECTION

Outline:

1.26.1 Marine Environment

1.26.2 Marine Environment Protection

1.26.3 Deck and End Panel Reinforcement Protection

1.26.4 Waterproofing Membranes

The level of effort to prevent reinforcing steel corrosion depends mainly on the potential for exposure to a corrosive environment.

1.26.1 Marine Environment

For the purposes of determining when the specified corrosion protection is required a Marine Environment is defined as any of the following:

- A location in direct contact with ocean water, salt water in a bay, or salt water in a river or stream at high tide (substructure).
- A location within 1/2 mile of the ocean or salt water bay where there are no barriers such as hills and forests that prevent storm winds from carrying salt spray generated by breaking waves.
- A location crossing salt water in a river or stream where there are no barriers such as hill and forests that prevent storm winds from generating breaking waves.

1.26.2 Marine Environment Protection

Provide the following minimum protection system for structures in a Marine Environment:

- Stainless steel for all deck, girder and crossbeam reinforcing steel.
- Black steel (no epoxy coating) for prestressing strands in precast members (to allow for future cathodic protection if needed).
- Minimum 2 inch cover on all cast-in-place members.
- HPC (microsilica) for all precast and cast-in-place concrete.

Additional protection measures including concrete sealers, cathodic protection or others should be reviewed with the Corrosion Specialist on a project-by-project basis.

1.26.3 Deck and End Panel Reinforcement Protection

The protection system for deck and end panel reinforcement is shown in *Table 1.26.3A* below.

For reinforcing steel extending out of the deck or end panel into bridge rails, curbs or sidewalks, use the same type of reinforcement as used in the deck or end panel. Use black (uncoated) steel for all other bridge rail, curb or sidewalk reinforcement.

Examples are shown on the following pages in *Figures 1.26.3A, 1.26.3B and 1.26.3C*.

Table 1.26.3A

DECK AND END PANEL REINFORCEMENT PROTECTIVE PRACTICES

	Coastal Areas (within 1 air mile of the Pacific Ocean)	Snow/Ice Areas*	Mild Areas**
Concrete Type	HPC (microsilica)	HPC (microsilica)	HPC (microsilica)
Reinforcement Type	Deck – Stainless steel top and bottom mats End Panel – Black (uncoated) top and bottom mats	Epoxy coated top and bottom mats in both the deck and end panel	Black (uncoated) top and bottom mats in both deck and end panel
Reinforcement Cover	2 inch top mat 2 inch bottom mat	2.5 inch top mat 1.5 inch bottom mat	2.5 inch top mat 1.5 inch bottom mat

* Snow/Ice areas are defined as all areas of central and eastern Oregon, the Columbia River Gorge, Jackson County, and any other areas above 1500 feet elevation. These areas are intended to include all areas with the potential to receive periodic application of deicing chemicals.

** Mild areas are defined as all areas not in a coastal area or in a snow/ice area. This includes all of western Oregon below 1500 feet elevation that is not within 1 mile of the Pacific Ocean.

Non-Coastal Cast-in-place Decks - For cast-in-place concrete decks, provide 2-1/2 inches of cover over the top mat of reinforcing steel. If epoxy coating is required, epoxy coat top and bottom longitudinal and transverse bars (including "truss" bars) and all bars extending from the deck into the sidewalk, curb or railing. Stirrups for precast girders do not need to be epoxy coated.

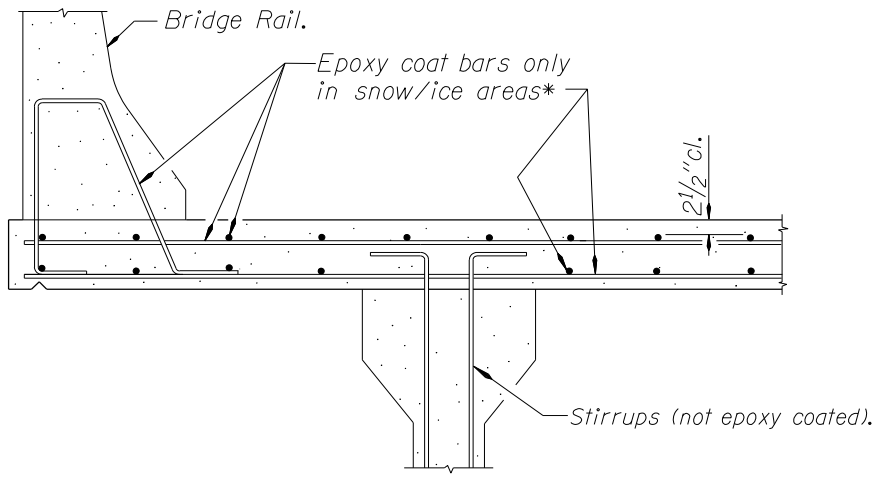

* See Table 1.1.25.3A for definition of snow/ice areas.

Figure 1.26.3A

Non-Coastal Structure Widening - For structure widening with cast-in-place decks normally provide a concrete overlay on the existing deck. If epoxy coating is required, epoxy coat the top and bottom longitudinal and transverse bars and all bars extending from the deck into the sidewalk, curb or railing.

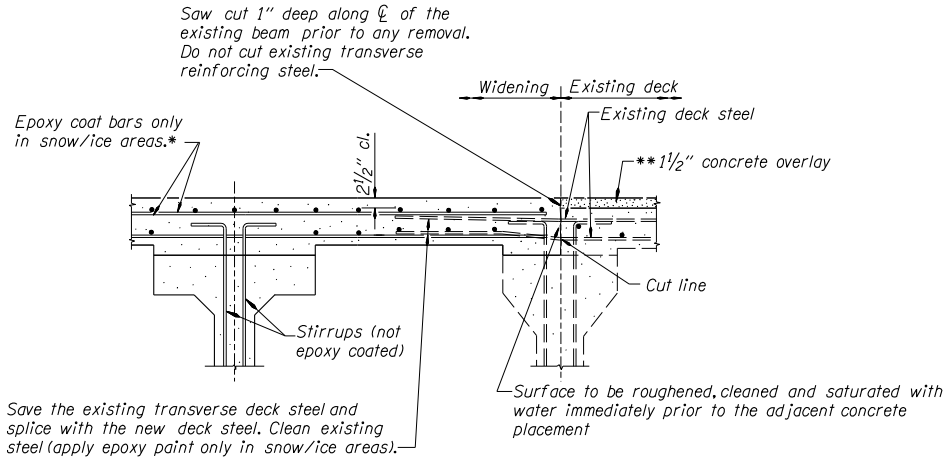

* See Table 1.1.25.3A for definition of snow/ice areas.
** 1/4" concrete deck surface to be removed prior to placement of the overlay.

Figure 1.26.3B

Non-Coastal Precast Slabs and Boxes - Precast slabs and box beams require waterproof membrane and an asphalt concrete wearing surface. If epoxy coating is required, epoxy-coat the top mat bars and bars extending from the precast elements into the sidewalk, curb or railing. See the standard drawings for other epoxy-coated bars in the precast slabs and box beams.

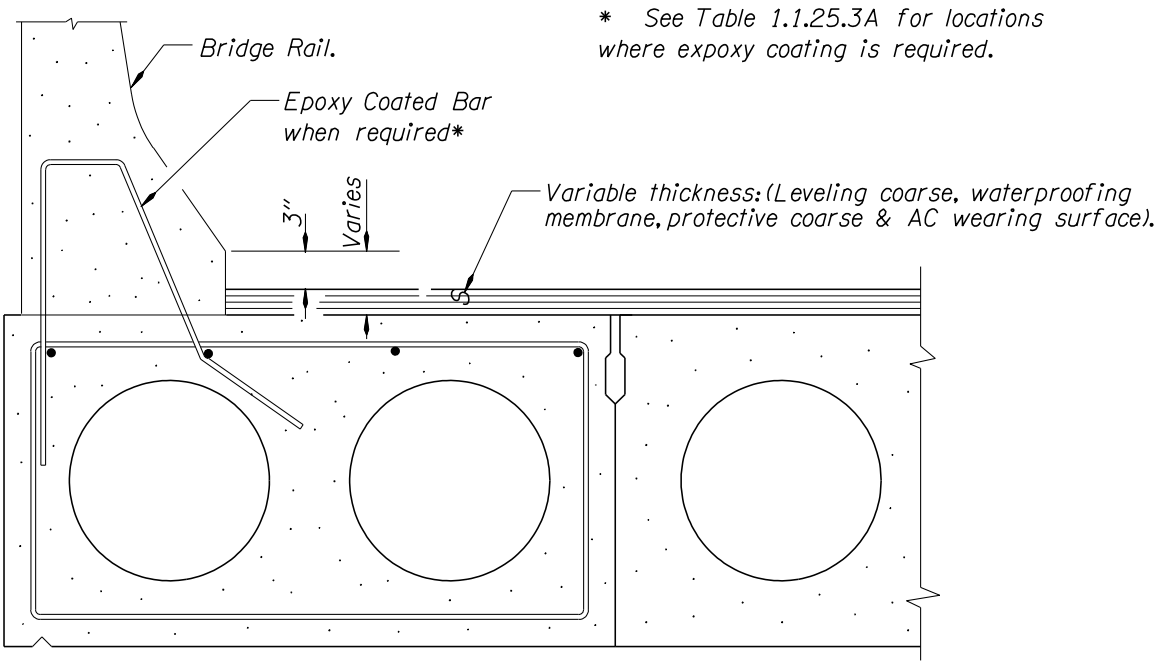

Figure 1.26.3C

1.26.4 Waterproofing Membranes

Waterproofing membranes are used as part of an overall deck protection concept. They are used primarily with bridges having an asphaltic concrete wearing surface (ACWS). Membranes serve the following purposes:

- Protect reinforcing steel from corrosion in concrete members by preventing moisture from roadway runoff (which potentially contains chlorides and other contaminates) from penetrating the concrete surface.
- Protect galvanized tie rods in precast prestressed concrete members placed side-by-side from roadway runoff.
- Protect timber bridge decks from moisture damage.
- Prevent roadway runoff water from passing through bridge elements to a roadway, bikeway or pedestrian way underneath the bridge.
- Prevent untreated roadway runoff water from passing through bridge elements to a waterway underneath the bridge.

Waterproofing membranes systems are selected from the ODOT Qualified Products List. Rolled type membranes are not allowed unless approved by the ODOT Senior Corrosion Engineer.

New State Bridges

For new bridges with cast-in-place decks, a waterproofing membrane should not normally be used, since these should normally be constructed without an ACWS.

Provide a waterproofing membrane for side-by-side precast concrete slab, box beam, and deck bulb-T construction with ACWS. The only pre-approved alternative to a waterproofing membrane is a cast-in-place HPC deck.

Existing State Bridges

FHWA requirements for State owned bridges states that "If deicing salts may be used in the future, some type of deck protection shall be used". This applies where an ACWS is to be installed over an existing concrete deck or where an ACWS with membrane is to be removed and an ACWS placed without a membrane. All areas of Oregon now have potential for use of deicing chemicals. Actual use of deicing chemicals in the project area can be verified by contacting the ODOT District Maintenance Manager.

Perform chloride testing on the existing bridge deck using AASHTO T260 to verify existing chloride levels are acceptable. Contact the Corrosion Protection Engineer from the Bridge Preservation Unit concerning the location and number of chloride tests required.

A structural concrete overlay should be used if warranted by *BDDM 1.9.4.5*.

Where most or all of the ACWS is to be removed, it should be anticipated that any existing membrane will be damaged during the ACWS removal process and need replacing. Where existing ACWS exceeds 2.5 inchses minimum depth, it is anticipated that ACWS removal can be performed without damage to an existing membrane.

New or Existing Local Agency Bridges

If the Local Agency bridge is on the NHS system, see New and Existing State Bridge guidelines. A deck protection system is desirable and should be investigated on each project, whether NHS or Non-NHS. The Local Agency may also request a waterproofing membrane.

If a Local Agency chooses not to use a waterproofing membrane for side-by-side construction, obtain written confirmation from the Local Agency. Include a copy of the Local Agency confirmation in the calculation book. Also confirm with the project environmental coordinator whether elimination of a membrane is acceptable when there is potential for roadway runoff to enter a waterway by leakage through adjacent bridge members.

1.27 ON-BRIDGE SIGN & ILLUMINATION MOUNTS

Outline:

1.27.1 Traffic Structures Mounted on Bridges, General

1.27.2 On-Bridge Sign Mounts

1.27.3 On-Bridge Illumination Mounts

1.27.1 Traffic Structures Mounted on Bridges, General

The following traffic structures may be located on bridges, although standard traffic lighting poles are the only traffic structures with standard bridge connection designs. The placement of other traffic structures on bridges should be discouraged. In special cases where other (larger) traffic structures must be located on the bridge, they should be connected directly to the bent.

- Standard lighting poles
- Camera poles
- Structure mounted signs (signing for traffic passing under bridge)
- Miscellaneous small signs (signing for traffic on bridge)

The traffic designer will be responsible for all aspects of design and for construction assistance for traffic structures located on bridges, except as noted below. Early in the project, the traffic designer will provide the bridge designer with maximum structure base reactions and other information necessary for the bridge designer to design the connection between the traffic structure and the bridge.

The decision on whether the traffic structure may be located on the bridge, and the exact location of the traffic structure on the bridge will be made by the bridge designer in conjunction with the project team. Structure mounted signs should preferably not exceed 7 feet in height. However, especially in urban areas the required sign legend may dictate a larger sign panel. The bridge designer should work with the project team to arrive at an acceptable solution, considering effects on aesthetics, sight distance, and related factors.

The Bridge designer will be responsible for the connection between the traffic structure and the Bridge, including the anchor bolts, and will review or check the shop drawings associated with the bridge design responsibilities.

1.27.2 On-Bridge Sign Mounts

[Reserved for future use]

1.27.3 On-Bridge Illumination Mounts

[Reserved for future use]

1.28 (RESERVED)

1.29 BRIDGE RAISING

Outline:

1.29.1 Bridge Raising, General

1.29.2 Bridge Raising Using Falsework

1.29.3 Bridge Raising Using Chip-in Method

1.29.1 Bridge Raising, General

Provide enough information in the contract document that enables the Construction Contractor's Engineer to design supporting elements for a bridge raising and stability of the structure during this operation.

Different construction procedures could be employed in raising a bridge. More common procedures are using falsework or 'chip-in' construction. A check needs to be made whether the bridge should be open to permit loads while under construction. Take a concrete sample of each column to verify the column's concrete strength.

1.29.2 Bridge Raising Using Falsework

Design assumptions and criteria include:

- Total dead load: Superstructure and substructure above the 'Chip-in' point, superimposed dead loads, utilities, signs, other dead loads that will remain on the bridge during the raising operation (field verify all dead loads at Project Initiation).
- Design live load: HS-25 when bridge is open.
- Close the bridge during the actual raising operation.
- For falsework design use 1.5 load factor for dead and live loads.
- When bridge is open to permit loads use 1.5 dead load factor and 1.35 live load factor.
- Temporarily pin concrete barriers that protect the bridge from damage from adjacent traffic. Provide at least 1 foot clearance between the barrier and the bridge or falsework elements.

1.29.3 Bridge Raising Using Chip-in Method

The 'Chip-in' method is a popular construction method for raising bridges. In this method concrete at the mid-point of each column is removed to provide enough room to place a jack and shims. The remaining concrete is removed and the reinforcing steel severed. After the bridge deck is brought to the desired elevation, the severed reinforcing steel is spliced and the void between the two portions of the column is filled with non-shrink concrete.

Design assumptions and criteria include:

- Total dead load: Superstructure and substructure above the 'Chip-in' point, superimposed dead loads, utilities, signs, other dead loads that will remain on the bridge during the raising operation (field verify all dead loads at Project Initiation).
- Design live load: HS-25 when bridge is open during 'Chip-in' operation; however, traffic should

not be permitted in the lane adjacent to the columns that 'Chip-in' is in progress.

- Close the bridge during the actual raising operation.
- For dead loads and super imposed dead loads use 1.5 dead load factor.
- When bridge is open to traffic after the raising operation use 1.35 live load factor.
- Bridge cannot be open to permit loads unless adequacy and stability of bridge was checked for permit loads. In this case use 1.35 load factor for permit loads.
- Temporarily pin concrete barriers that protect the bridge from damage from adjacent traffic. Provide at least 1 foot clearance between the barrier and the bridge elements.

1.30 STRENGTHENING OF BRIDGES

Outline:

1.30.1 Strengthening of Bridges, General

1.30.2 Permanent Strengthening of Reinforced Concrete Bridges

1.30.1 Strengthening of Bridges, General

The terms “Strengthening” and “Repair” are sometimes used interchangeably to describe an action, but they are not the same. Strengthening is the addition of load capacity beyond the level provided for in the original design. Repair is the restoration of the load capacity to the level of the original design.

Bridge strengthening is required when the critical load rating factor for a bridge falls below 1.0. Design bridge strengthening to resist the live load given in *BDDM 1.3.2(4)*. Note that the required live load for strengthening will typically result in final load rating factors much greater than 1.0.

Bridge repair projects are typically limited to isolated portions of the bridge and address specific needs such as substructure issues and collision damage. Examples of such cases are:

- Footings and/or columns
- Piling
- Girder damage from over height collision
- Bridge rail collision damage

Most bridge projects that require engineering to address needs on existing structures will be considered to be strengthening and will be designed to the criteria mentioned above.

In rare cases there may be extenuating circumstances to support a “do nothing” or reduced design criteria. For such cases, approval of a design deviation is required. FHWA review will also be required if a bridge is to remain in service with a critical rating factor less than 1.0. Factors to be considered in the design deviation approval process may include:

- Estimated cost of repair or strengthening
- Existing permit truck volume and potential for future increases
- Existing girder cracking
- Number of lanes and shoulder widths
- Alternate routes available
- Existing bridge detailing

1.30.2 Permanent Strengthening of Reinforced Concrete Bridges

Design strengthening for reinforced concrete bridges for the live load provided in *BDDM 1.3.2(4)*.

1.30.2.1 Flexure

The following methods can be considered for strengthening girders in flexure:

- Deepening or widening existing concrete girders.
- Longitudinal post-tensioning.
- FRP laminate strips along bottom of girders.
- FRP near surface mount (NSM) strips along bottom of girders.

When longitudinal post-tensioning is used as part of a flexural strengthening design concept, understand that long-term relaxation of the post-tensioning system may reduce the effectiveness of the strengthening. Any long-term relaxation should be accounted for unless provision for future tightening is included.

Design FRP strengthening according to ACI 440.2R-08. Do not use FRP laminate strips unless the critical flexural rating factor is ≥ 0.80. The 0.80 critical flexural rating factor limitation does not apply to NSM strips. Strengthening with FRP laminate strips or NSM strips can be considered a long-term (more than 20 years) strengthening solution. Provide positive anchorage at the ends of FRP laminate strips. Anchorage using FRP laminate strips transverse to the loaded direction is not acceptable. Proper surface preparation is critical to ensure a successful FRP application.

1.30.2.2 Shear

The following methods can be considered for strengthening girders in shear:

- Widening existing concrete girders
- Longitudinal post-tensioning
- Internal shear anchors
- FRP laminate strips along web
- FRP near surface mount (NSM) strips along web (vertical orientation only)

When longitudinal post-tensioning is used as part of a shear strengthening design concept, understand that long-term relaxation of the post-tensioning system may reduce the effectiveness of the strengthening. Any long-term relaxation should be accounted for unless provision for future tightening is included.

Internal shear anchors can be installed either from above or below the girder. Installation from above may be easier and should therefore be considered where practical. Specialty contractors are generally available for drilling 1 inch diameter holes up to 48 inches in depth. For this reason, internal shear anchor size should be limited to 3/4 inch. Do not use larger sizes or depths unless the availability of multiple contractors has been verified.

For shear applications, internal anchors should normally be placed at an angle 30 degrees from vertical. This angle provides 96 percent of the capacity compared to 45 degree anchors and is much easier to install.

Evaluate the size, spacing and density of positive and negative moment reinforcement in the girder and deck when considering internal shear anchors as a strengthening solution. It is often difficult to avoid existing deck steel or existing flexural steel when installing internal anchors. The designer needs to give clear instructions to the contractor concerning how potential conflicts should be either avoided or resolved. Possible solutions are:

- Locate existing bars using Ground Penetrating Radar (GPR) before drilling holes
- Expose the top mat of reinforcement before drilling
- Stop drilling and move hole location when a conflict is discovered

Internal anchors require development length at each end of the rod. Calculate the required development length according to the General Equation for Resin Tension Capacity in *BDDM 1.20.2.2*. Provide adequate development length for a load equal to the ultimate bar tensile strength. The effective length of an internal anchor is the length remaining after subtracting the development length at each end of the bar.

Design FRP strengthening according to ACI 440.2R-08. Use intermittent strips with 4 inch minimum gap to allow for inspection of the bare concrete between the strips. Do not use FRP laminate strips unless the critical shear rating factor is ≥ 0.80. The 0.80 critical shear rating factor limitation does not apply to NSM strips. Strengthening with FRP laminate strips or NSM strips can be considered a long-term (more than 20 years) strengthening solution. Provide positive anchorage at the ends of FRP laminate strips. Anchorage using FRP laminate strips transverse to the loaded direction is not acceptable. Proper surface preparation is critical to ensure a successful FRP application.

External stirrups (vertical rods) have been used for temporary shear strengthening of concrete girders, but they are not considered adequate for permanent strengthening.

Do not use bonded and/or bolted steel plates attached to the sides of concrete girders for shear strengthening without prior approval from Bridge Section.

1.30.2.3 Epoxy Injection

Epoxy inject shear and/or shrinkage cracks with widths 0.016 inches and larger and where the bridge is:

- Located in a Snow/Ice area*, or
- Located in a Coastal Area (within 1 air mile of the Pacific Ocean), or
- The bridge shows signs of corrosion.

* Snow/Ice areas are defined as all areas of central and eastern Oregon, the Columbia River Gorge, Jackson County, and any other areas above 1500 feet elevation. These areas are intended to include all areas with the potential to receive periodic application of deicing chemicals.

Epoxy injection is not considered an effective strengthening method for either flexure or shear. However, it improves corrosion protection. Injection of cracks smaller than 0.016 inches is difficult and is only marginally effective. Cracks greater than 0.040 inches will require strengthening so the bridge will not be considered to be Structurally Deficient.

During installation of FRP repairs, epoxy inject shear and/or shrinkage cracks in the repair area with widths 0.016 inches and greater.

Reference concrete crack widths in specification documents and on plan sheets using one of the available widths provided on the ODOT crack comparator (gauge). The available widths (in inches) are as follows:

0.008
0.010
0.013
0.016
0.020
0.025

For concrete cracks greater than 0.025 inches, show crack size to the nearest hundredth.

1.31 (RESERVED)

1.32 PRESERVATION AND REPAIR

Outline:

1.32.1 Preservation and Repair

1.32.1 Preservation and Repair

(Reserved for future use)

1.33 BRIDGE PAINT

Outline:

1.33.1 Bridge Paint

1.33.1 Bridge Paint

(Reserved for future use)

1.34 (RESERVED)

1.35 COVERED BRIDGES

Outline:

1.35.1 Covered Bridges

1.35.1 Covered Bridges

(Reserved for future use)

1.36 MOVEABLE BRIDGES

Outline:

1.36.1 Moveable Bridges

1.36.1 Moveable Bridges

(Reserved for future use)

1.37 (RESERVED)

1.38 BRIDGE TEMPORARY WORKS

Outline:

1.38.1 Introduction

1.38.2 Temporary Detour Bridges

1.38.3 Agency Provided Temporary Detour Bridge

1.38.4 Falsework

1.38.5 Shoring

1.38.6 Cofferdams

1.38.1 Introduction

Temporary Works are considered any temporary construction used to construct highway related structures but are not incorporated into the final structure. Temporary works required for construction of permanent structures include: temporary detour bridge, work bridge, falsework, formwork, shoring, cofferdams and temporary retaining structures.

Design Temporary Works according to the AASHTO *Guide Design Specifications for Bridge Temporary Works* unless specified otherwise herein. Construct Temporary Works according to the AASHTO *Construction Handbook for Bridge Temporary Works.*

Specifications for Temporary Works are typically not included in the Oregon Standard Specifications for Construction for bridges; they are included by Special Provision and are available on the ODOT Specification web page. Common Temporary Works Special Provisions used are:

Title	Section Number
Temporary Detours	00230
Temporary Detour Bridges (Contractor Provided)	00250
Agency Provided Temporary Bridges	00251
Temporary Work Bridges	00252
Temporary Work Platform	00253
Temporary Work Access	00254
Temporary Retaining Walls	00256

Standard Specifications that also contain temporary works sections are:

Title	Section Number
Structure Excavation and Backfill (shoring and cofferdams)	00510
Structural Concrete (Falsework)	00540
Trench Protection	00405.41(f)
Temporary Trench Plating	00405.46(c)
Jacking Pits	00406.41(b)

General Requirements

Roadway and Railroad Crossings

For roadway and railroad crossings, provide the vertical and horizontal clearances as shown on the plans and the following:

Bents Adjacent to Highways

Bents adjacent to highway traffic openings shall have:

- Temporarily pinned, pin and loop concrete barriers to protect the structure from damage by the adjacent traffic. Provide at least 1 foot clearance between the barrier and the bent.
- Posts designed for 150 percent of the calculated vertical loading.
- Provide mechanical connections for posts to the supporting footing with capacity to resist a minimum lateral force of 2,000 pounds applied in any direction at the base of the post.
- Provide mechanical connections between top of posts and the cap or stringer capable of resisting a minimum lateral force of 2,000 pounds from any direction.
- Tie down all beams or stringers spanning traffic so that each will resist a 500 pound force from any direction.
- 5/8 inch diameter minimum bolts at timber bracing connections.

Bents Adjacent to Railroads

Bents adjacent to railroad traffic openings shall, in addition to the requirements of (d-1) above, provide the following:

- Collision posts as shown.
- Bents within 20 feet of the centerline of track sheathed solid between 3 feet and 16 feet above top of rail with 5/8 inch thick minimum plywood and properly blocked at the edges.
- Bracing on bents within 20 feet of the centerline of the track shall be adequate to resist the required horizontal design loading or minimum a 5,000 pounds horizontal loading.

Width

Design temporary bridges to match the temporary roadway width and vertical and horizontal alignment as shown.

1.38.2 Temporary Detour Bridges

Temporary detour bridges are those bridges that have a maximum service life of five years to carry traffic while an existing structure is replaced.

Temporary detour bridges shall conform to the same requirements as that of a permanent structure, except as specified in this section. For seismic design requirements, refer to *BDDM 1.17*. Detour bridges can be designed using latest edition Standard Specification for Highway Bridges or latest edition AASHTO LRFD Bridge Design Specifications. If the Standard Specifications for Highway Bridges are used, bridge rail live loads must meet LRFD criteria.

Hydraulics of Temporary Structures

These hydraulic requirements apply whether the Contractor uses a temporary detour structure designed by ODOT, or provides an alternate structure of his own design.

The hydraulics report will have recommendations for the detour bridge. The data will include seasonal limitations, flow area of the structure, and minimum elevation of the detour roadway. A brief statement about the proposed location of the detour will need to be prepared. Other information about the detour may include a discussion of maintenance needs such as monitoring for debris or scour. The detour structure will need to conform to the Temporary Water Management Plan regarding fish passage.

A dry season detour is to be in use only during the dry season. The hydraulics report should define the start and end of the dry season. The design and check floods are based on the maximum predicted discharges for the months the detour will be in place. It is recommended that the 2-year flood be used as the minimum design flood event.

An all-year detour may be used throughout the year. The all-year detour must pass the 5-year flood event at a minimum. The 10-year and 25-year check flows should be used to determine the risk of damage if they should occur during the time the detour is in place.

The minimum road elevations for dry season and all-year detours are the elevations at which the roadway will not overtop during the dry season or 5-year flows, respectively. *Section 3.9* of the ODOT Hydraulics Manual furnishes more detailed guidance on requirements for either duration detour.

Other issues, such as maintenance needs, fish passage, navigational clearance, or other site-specific needs must also be addressed.

The crossing of FEMA floodways with temporary structures requires special consideration. These temporary structures must meet additional hydraulic requirements if they are in place across the floodway between November 1 and May 31. It is recommended that ODOT Regional Technical Center staff should be contacted for assistance as soon as possible during the design process if the structure is to cross a floodway during these months.

Section 3.8 of the ODOT Hydraulics Manual furnishes more detailed guidance on FEMA policy requirements.

Structural Requirements

Design all structures on public roads, temporary or permanent, to carry all anticipated loads, and forces. Temporary structures must also resist lateral loads caused by hydraulics, debris, ice, wind and other applied forces when they exist. Design temporary detour bridges over waterways assuming scour depths and design flood in accordance with the Oregon Department of Transportation Hydraulic Manual.

Mechanically connect members of the temporary detour bridge together. The minimum capacity of the mechanical connections shall resist a load in any direction, including uplift on the stringer, of not less than 500 pounds. All associated connections shall be installed before traffic is allowed to pass beneath the span. All members at a connection need to resist the developed connection force. Substructure shall resist all applied combined axial and lateral loads and the minimum connection design force.

Contractor designed temporary detour bridge will follow all required design steps as the design of permanent bridges. Provide necessary data to the contractor in the Special Provisions (*SP 00250*) to accelerate design such as:

- Foundation report
- Hydraulic report
- Environmental study and limitations
- In water work window

Furnish information on the plans not limited to following:

- Minimum structure width and number of traffic lanes
- Permit load (for permit load route)
- Minimum vertical and horizontal clearances when over crossing existing highway
- All project specific requirements (utilities, sidewalk….)

1.38.3 Agency Provided Temporary Detour Bridge

Oregon Department of Transportation has one lane and two lanes temporary detour bridges ready to erect at different locations. Provide a drawing showing the bridge footprint and foundation drawings. Contact Jeff Swanstrom at (503) 986-3337 for availability, scheduling and technical information of these bridges. Use Special Provision (*SP 00251*) for using these temporary detour bridges.

1.38.4 Falsework

General

Provide minimum jacking force capacity for lifting an existing superstructure for bearing replacement or bridge raising of 1.50 times superstructure loads (including any supported live loads) at jacking time. The vertical load used for the design of falsework posts and foundation shall be at least 150 percent of the distributed load to that post. When the post is supported on an existing structure footing limit the stress on the concrete footing from all combined loads to 80 percent of permissible concrete stress. Additionally limit the foundation loads to the allowable foundation bearing capacity.

For falsework spans over roadways and railroads, all falsework stringers shall be mechanically connected to the falsework cap or framing. The mechanical connections shall be capable of resisting a load in any direction, including uplift on the stringer, of not less than 500 pounds. All associated connections shall be installed before traffic is allowed to pass beneath the span.

Provide, as a minimum, the following design calculations and detailing of falsework drawings, for a falsework supported by existing columns of a structure for widening projects or maintenance work:

- Complete connection details.
- Location of resin bonded anchors with a note to locate the existing reinforcing prior to drilling holes.
- When resin bonded anchor rods or thru holes for bolted connections were used to support endplates or bracket connections; have the contractor field verify the location of holes prior to connection fabrication.
- Connection designed for 150 percent of the applied loads.
- Connection designed for wind load.
- Stress on existing column and supporting foundation shall not exceed 80 percent allowable of each member.
- Limit the foundation loads to the allowable foundation bearing capacity.

Bridge Deck Falsework

The deck form for interior girders is usually set on the joists hung on from top flanges or supported by post from bottom flanges. It is not recommended by Oregon Department of Transportation to use embedded hangers welded to top flange or shear studs projecting from top flanges.

The Construction Handbook for Bridge Temporary Works has two examples for cantilever deck forming for steel girders. The contractor may provide double overhang brackets to minimize lock in stresses in exterior girders. *Figure 1.38.4* is provided to illustrate typical deck forming details using opposed overhang brackets attached to a steel girder.

Steel girders: Do not drill or punch holes thru interior girders web for temporary work. Include a note in the contract drawing and Special Provision that no holes in the interior girder webs are permitted.

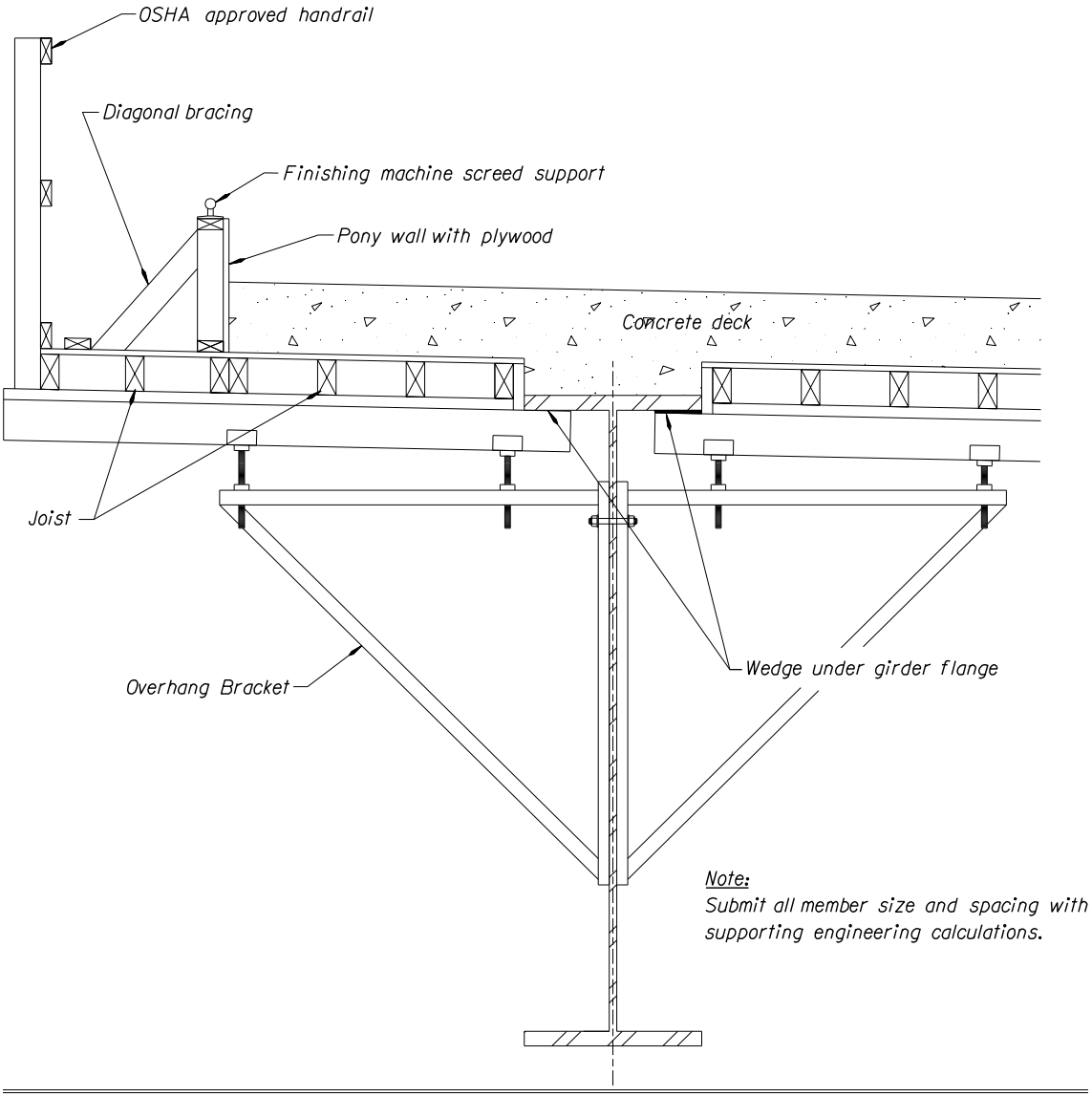

Figure 1.38.4

Piling

Design piling in accordance with AASHTO Standard Design Specifications for Highway Bridges.

When using piling to support the falsework, the falsework plans shall specify the minimum required bearing capacity and the required depth of penetration for the piling. The field method for determining the required pile bearing capacity shall be provided. Also, the falsework drawings shall show the maximum horizontal distance that the top of a falsework pile may be pulled in order to position it under its cap. The falsework plans shall show the maximum allowable deviation of the top of the pile, in its final position, from a vertical line through the point of fixity of the pile. The calculations shall account for pile stresses due to combined axial and flexural stress and secondary stresses. The design calculation shall show the stresses and deflections in load supporting members.

Spread Footings

Design spread footings in accordance with AASHTO Standard Design Specifications for Highway Bridges.

When spread footings are used to support falsework, the falsework plans shall specify the minimum required bearing capacity, depth of embedment for the footings, and maximum allowable settlement. Spread footings shall be designed to adequately resist all imposed vertical loads and overturning moments. The calculations provided for the spread footings shall include the soil parameters and groundwater conditions used in design. Design calculations for allowable bearing capacity and settlement shall be provided. The estimated footing settlement under the imposed design loads shall be shown on the plans. Provisions for addressing the effects of footing and falsework settlement shall be provided.

Bracing

Bracing shall not be attached to concrete traffic barrier, guardrail posts, or guardrail.

All falsework bracing systems shall be designed to resist the horizontal design loads in all directions with the falsework in either the loaded or unloaded condition. All bracing, connection details, specific locations of connections, and hardware used shall be shown in the falsework plans. Falsework diagonal bracing shall be thoroughly analyzed with particular attention given to the connections. The allowable stresses in the diagonal braces may be controlled by the joint strength or the compression stability of the diagonal.

To prevent falsework beam or stringer compression flange buckling, cross-bracing members and connections shall be designed to carry tension as well as compression. All components, connection details and specific locations shall be shown in the falsework plans. Bracing, blocking, struts, and ties required for positive lateral restraint of beam flanges shall be installed at right angles to the beam in plan view. If possible, bracing in adjacent bays shall be set in the same transverse plane. However, if because of skew or other considerations, it is necessary to offset the bracing in adjacent bays, the offset distance shall not exceed twice the depth of the beam.

Bracing shall be provided to withstand all imposed loads during erection of the falsework and all phases of construction for falsework adjacent to any roadway, sidewalk, or railroad track which is open to the public. All details of the falsework system which contribute to horizontal stability and resistance to impact, including the bolts in bracing, shall be installed at the time each element of the falsework is erected and shall remain in place until the falsework is removed. The falsework plans shall show provisions for any supplemental bracing or methods to be used to conform to this requirement during each phase of erection and removal. Wind loads shall be included in the design of such bracing or methods.

Deck Overhang Bracket

There are a few design examples in the Construction Handbook for Bridge Temporary Works.

1.38.5 Shoring

Plan Notes

Show the approximate location and extent of any anticipated shoring.

Show a typical cross-section of the area where shoring may be needed and/or other cross-sections where unusual conditions may make shoring an issue.

To cover inadvertent exclusions or omissions, a note similar to the following may be added: “Provide all shoring as required for construction. The locations and limits shown are only to alert the Contractor that shoring may be needed. The Contractor shall determine the actual locations and limits of all shoring required.”

Design

Refer to the ODOT Geotechnical Design Manual for the design of temporary shoring, exclusive of cofferdams.

1.38.6 Cofferdams

1.38.6.1 Earth Pressures

If cofferdams are required and passive earth pressures are assumed in the design, show a detail similar to *Figure 1.38.6.1A* on the plans. Material outside cofferdams should also be undisturbed and backfilled with riprap if disturbed.

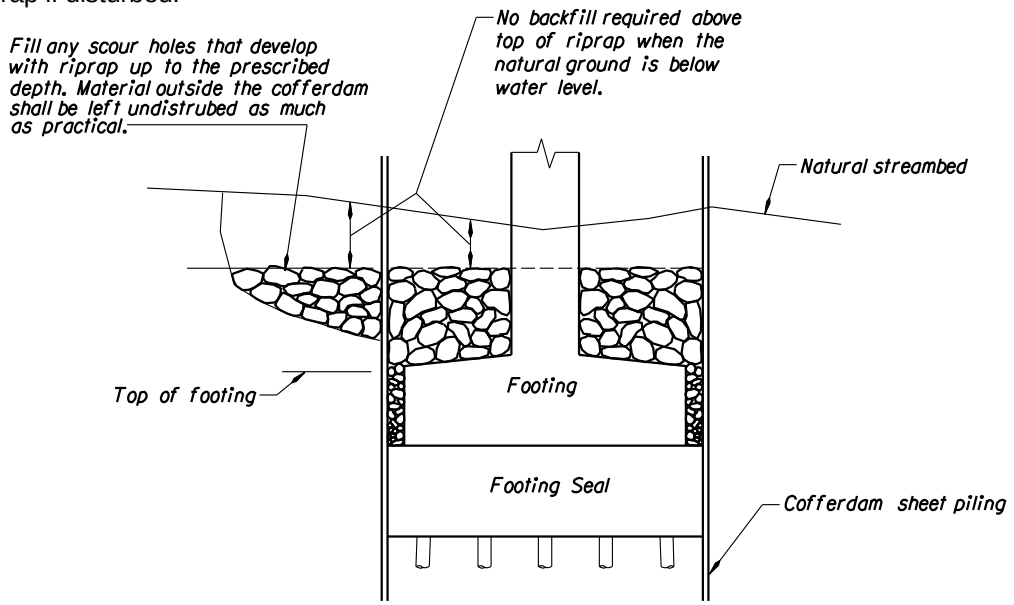

Figure 1.38.6.1A

1.38.6.2 Cofferdam Seals

(1) Seals, General

Seals should be used only when the sheet piles cannot be driven to sufficient depth to cut off the water pressure.

The sheet piling must penetrate and form a seal in the soil so that there is no water flow under the sheet piling. In practice there will be some water entering the cofferdam. Energy is dissipated as the water flows down around the bottom of the sheet piles. A flow net must be developed to determine the actual hydrostatic forces. The equipotential flow lines will show a reduction in the hydrostatic uplift forces. The hydrostatic uplift forces will be resisted by the friction between the soil and the sheet piles and the buoyant weight of the soil plug. Additionally, horizontal hydrostatic forces are present and must be designed for. These are special conditions and require detailed Hydraulic and Foundation studies.

(2) Cofferdams Without Seals

There may be some locations and soil types where a seal may not be required for footing and column construction. The normal sequence of construction for a cofferdam without a seal includes:

1. Water level is the same inside and outside the cofferdam

   - Cofferdam is constructed - normally driven interlocking steel sheet pile.

   - Vent holes are cut in the sheet piling - vent holes are placed at the maximum design water level elevation and allows water to enter the cofferdam. A vent hole must be cut at the design elevation to prevent cofferdam failure.

   - Material is excavated inside the cofferdam to the bottom of the footing elevation. Excavation may also be done after dewatering, when there is no seal required, if the internal bracing is in place.

   - Internal bracing is placed - usually horizontal bracing consists of wales, frames, and/or struts to resist the horizontal hydrostatic forces.

   - Footing piles are driven - when required. This may also be done after dewatering and after excavation.

2. Water is removed from the cofferdam

   - Continuous pumping system is installed - cofferdams are never completely watertight and a sump system is normally installed to keep the cofferdam relatively dry.

   - Piles, if used, are cut off to the specified elevation.

   - Footing and column are constructed in the dry.

3. Cofferdam is flooded

   - Internal bracing is removed.

   - If agreed to by the environmental section, riprap is placed before or after the sheet piling is

removed. It may be desirable to place riprap inside the cofferdam. Check with the Foundation designer.

- Sheet piling are extracted.

(3) Cofferdam with a Seal

A seal is usually an unreinforced mass of concrete that seals the bottom of a cofferdam and allows construction of the footing and column inside of a dewatered or dry cofferdam. (See *Figure 1.38.6.2A*) The normal sequence of construction of a cofferdam with a seal includes:

1. Water level is the same inside and outside the cofferdam

   - Cofferdam is constructed - normally driven interlocking steel sheet pile.

   - Vent holes are cut in the sheet piling - vent holes are placed at the maximum design water level elevation and allows water to enter the cofferdam. A vent hole must be cut at the design elevation to prevent cofferdam failure. The contractor may propose to use a lower vent elevation and thinner seal, if the anticipated water elevation is lower at the time of construction.

   - Material is excavated inside the cofferdam to the bottom of the seal elevation.

   - Internal bracing is placed - usually horizontal bracing consists of wales, frames, and/or struts to resist the horizontal hydrostatic forces.

   - Footing piles are driven - when required.

   - Seal concrete is placed

   - With a tremie: A tremie is a long pipe that extends to the bottom of the seal and prevents the concrete from segregating as it passes through the water, as well as permitting a head to be maintained on the concrete during placement. The bottom of the tremie is kept submerged in the mass of concrete to minimize water intrusion into the mix.

   - With a concrete pump: Similar principle to the tremie.

2. Water is removed from the cofferdam

   - Cofferdam is dewatered, only after the concrete has gained sufficient strength to resist hydrostatic loads.

   - Continuous pumping system is installed - cofferdams are never completely watertight and a sump system is normally installed to keep the cofferdam relatively dry.

   - Piles, if used, are cut off to the specified elevation.

   - Seal is prepared for footing construction - leveled and cleaned as needed for constructing footing forms.

   - Footing and column are constructed in the dry.

3. Cofferdam is flooded

   - Internal bracing is removed.

- Rip-rap is placed before or after the sheet piling are removed. It may be desirable to place rip-rap inside the cofferdam. Check with the Foundation Designer.

- Sheet piling are extracted.

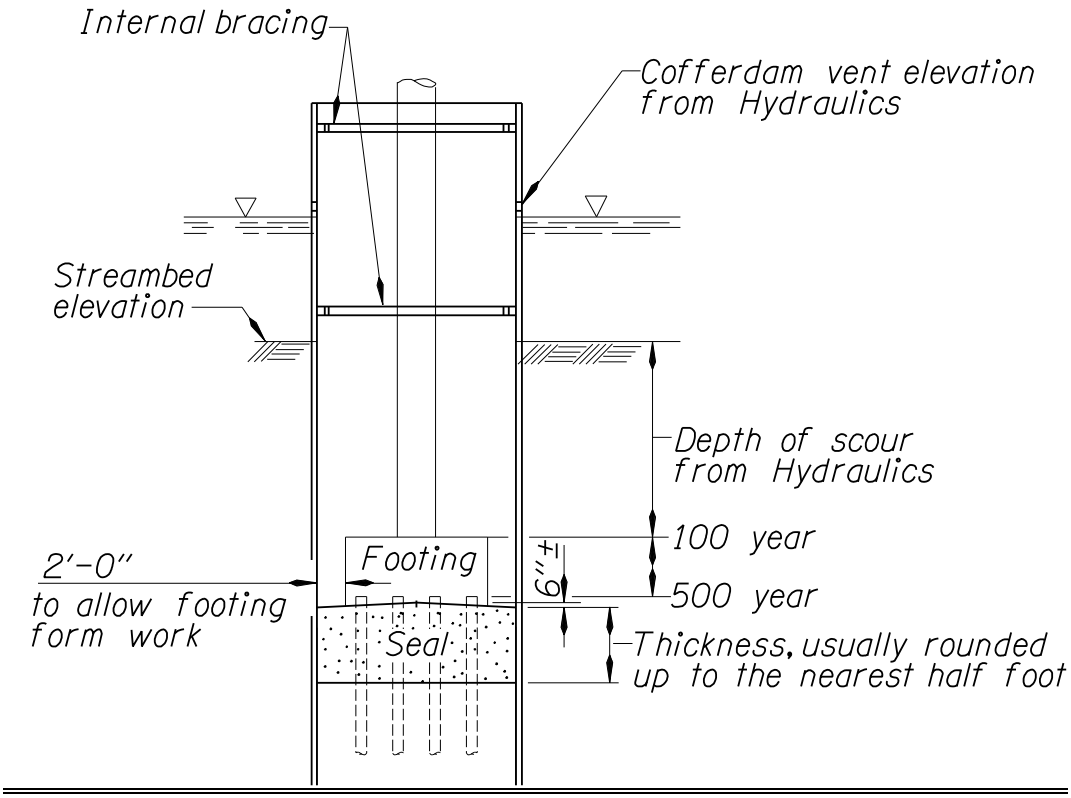

SEAL THICKNESS DETAIL

Figure 1.38.6.2A

(4) Seal Design Considerations

The seal forms a plug at the bottom of the cofferdam, using a combination of seal mass and/or friction between the seal concrete and piling to resist the hydrostatic forces.

Scour protection for the footing influences the location (depth) of the footing and must be incorporated into the design. The Hydraulics Unit will provide this information.

The top of the footing should be below the 100 year scour depth and the bottom of footing below the 500-year scour depth. The Hydraulics Unit will provide these elevations.

Normally the friction or bond between the seal concrete and steel piling is assumed to be 10 psi for the surface area of the embedded pile. Check with the Foundation Designer for bond values of other pile types.

An uplift capacity of driven piling should also be obtained from the Foundation Designer to include in the overall stability or factor of safety of the system.

The minimum factor of safety of the system should be 1. Note that the actual factor of safety is greater because the bond between the seal and sheet piling has been neglected.

A general rule of thumb, or good starting point, for seal thickness is 0.40 times (head of water plus an estimated seal thickness) for spread footings and 0.25 times (head of water plus an estimated seal thickness) for pile supported footings.

Use a minimum depth of seal of 4 feet, where piles are calculated to resist uplift in order to reduce seal depth.

Design pile footings that includes a seal for bending and shear ignoring any beneficial effects of the seal. This is due to the uncertain quality of the seal concrete and because the seal may be reduced or eliminated during construction.

There are two ways of looking at the cofferdam system when determining the seal thickness. Each should result in the same seal thickness:

Method 1: Assume there is some leakage around the seal and the actual water level inside the cofferdam is at the top of the seal. Then the hydrostatic uplift force is based on the depth of water to the top of the seal, but because it is submerged the weight of the seal must be determined using the buoyant weight.

Method 2: Assume the seal prevents any leakage and the hydrostatic uplift depth is to the bottom of the seal. Then the full weight of the seal is used to resist the uplift forces.

Spread Footing Example (using method 1):

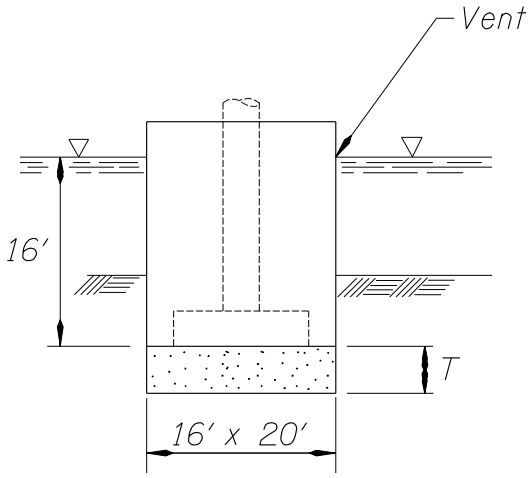

Figure 1.38.6.2B

Determine the seal thickness for a 16' x 20' cofferdam. Water depth is 16 feet from the vent to the top of the seal.

Estimated T = 0.4(16' + 10' est. thickness) = 10.4'

Summing vertical forces:

Uplift force = weight of water displaced
= (Area)(Depth of water)(Unit force of water)
= (16')(20')(16' water depth)(0.0624 k/ft^3)

Force of seal = buoyant force of the seal
= (16')(20')(T' seal thickness)(0.15 – 0.0624 k/ft^3)

Uplift force = Force of seal

Solving for T:

T = 11.4' - use 11.5' seal thickness

Note: F.S = 1.0 for T = 11.4'

Pile-supported Example (using method 1):

Determine the seal thickness for a 16' x 20' cofferdam, with 12 – 12" diameter steel piles. Uplift capacity is 10 kips per pile. Water depth is 16 feet from the vent to the top of the seal.

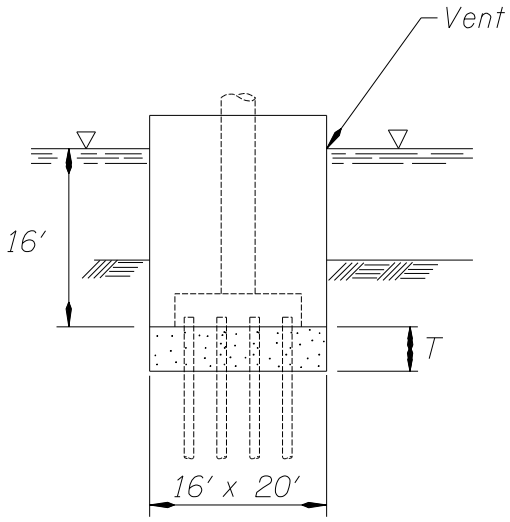

Figure 1.38.6.2C

Estimated T = (0.25)(16' + 10' est. thickness) = 6.5'

Summing vertical forces:

Uplift force = weight of the water displaced
= (16')(20')(16' water depth)(0.0624 k/ft^3)
= 319.49 k

Weight of seal = buoyant weight of the seal
= (16')(20')(T' seal thickness)(0.150 – 0.0624 k/ft^3)
= 28.03(T) k/ft

Pile displaced concrete = (12 pile)(0.785 ft^2)(T')(0.150 – 0.0624 k/ft^3)
= 0.825(T) k/ft

Bond on piles = (12 pile)(π)(1')(6.5')(0.010 ksi)(144 in^2/ ft^2) = 352.86 k

Pile uplift capacity = (12 pile)(10 k/pile) = 120 k < 352.86 k use 120 k

Uplift force = (Seal weight) - (Pile disp. conc.) + (Pile uplift capacity)
319.49 k = 28.03(T) – 0.825(T) + 120

Solving for T:

T = 7.33' - use 7.5' seal thickness

Note: F.S. = 1.0 for T = 7.33'

APPENDIX – SECTION 1 – GLOSSARY

A

Abutment - Supports at the end of the bridge used to retain the approach embankment and carry the vertical and horizontal loads from the superstructure. Current terminology is bent or end bent.

Access Control - The condition where the legal right of owners or occupants of abutting land to access a highway is fully or partially controlled by the Department of Transportation.

Advance Plans – 95-100% complete plans including special provisions, normally sent at 15 weeks.

Advertisement - The period of time between the written public announcement inviting proposals for projects and the opening of the proposals (bid or letting date).

Aggregate - Inert material such as sand, gravel, broken stone, or combinations thereof.

Aggregate, Coarse - Aggregates predominantly retained on the No. 4 sieve for portland cement concrete and those predominantly retained on the 1/4” for asphalt concrete.

Aggregate, Fine - Those aggregates which entirely pass the 3/8” sieve.

Aggregate, Dense Graded - A well-graded aggregate so proportioned as to contain a relatively small percentage of voids.

Aggregate, Open Graded - A well-graded aggregate containing little or no fines, with a relatively large percentage of voids.

Aggregate, Well-Graded - An aggregate possessing proportionate distribution of successive particle sizes.

Air-Entraining Agent - A substance used in concrete to increase the amount of entrained air in the mixture. Entrained air is present in the form of minute bubbles and improves the workability and frost resistance.

Allowable Headwater - The maximum elevation to which water may be ponded upstream of a culvert or structure as specified by law or design.

Allowable Span – The greatest horizontal distance permitted between supports.

Anchor Bolts - Bolts that are embedded in concrete which are used to attach an object to the concrete such as rail posts, bearings, steel girder-to-crossbeam connections, etc.

Anode - The positively charged pole of a corrosion cell at which oxidations occur.

Apron - The paved area between wingwalls at the end of a culvert.

Arch - A curved structure element primarily in compression, producing at its support reactions having both vertical and horizontal components.

Arch Pipe - A conduit in the form of a broad arch without a bottom.

Average Daily Traffic (ADT) - The average 24-hour volume of traffic, being the total during a stated period divided by the number of days in that period. Unless otherwise stated, the period is a year.

Axle Load - The load borne by one axle of a traffic vehicle.

Award - Written notification to the bidder that the bidder has been awarded a contract.

B

Backfill - Material used to replace or the act of replacing material removed during construction; also may denote material placed or the act of placing material adjacent to structures.

Backwater - The water upstream from an obstruction in which the free surface is elevation above the normal water surface profile.

Bar Chair - A device used to support horizontal reinforcing bars above the base of the form before the concrete is poured.

Bar Cutting Diagram - A diagram used in the detailing of bar steel reinforcement where the bar lengths vary as a straight line.

Base Course - The layer of specified material of designed thickness placed on a subbase or a subgrade to support a surface course.

Bascule Bridge - A bridge over a waterway with one or two leaves which rotate from a horizontal to a near-vertical position, providing unlimited clear headway.

Base Flood - Flood having 1% chance of being exceeded in any given year.

Battered Pile - A pile driven in an inclined position to resist horizontal forces as well as vertical forces.

Beam - Main longitudinal load carrying member in a structure, designed to span from one support to another (girder).

Bearings - Device to transfer girder reactions without overstressing the supports.

Bearing Capacity - The load per unit area which a structural material, rock, or soil can safely carry.

Bearing Failure - A crushing of material under extreme compressive load.

Bearing Seat - A prepared horizontal surface at or near the top of a substructure unit upon which the bearings are placed.

Bearing Stiffener - A stiffener used at points of support on a steel beam to transmit the load from the top of the beam to the support point.

Bedrock - The solid rock underlying soils or other superficial formation.

Bench Mark - A relatively permanent material object bearing a marked point whose elevation above or below an adopted datum is known.

Bent - Supports at the ends or intermediate points of a bridge used to retain approach embankments and/or vertical and horizontal loads from the superstructure.

Bicycle Lane - A lane in the traveled way designated for use by bicyclists.

Bicycle Path - A public way physically separated from the roadway, that is designated for use by bicyclists.

Bid Schedule - The list of bid items, their units of measurement, and estimated quantities, bound in the proposal booklet. (When a contract is awarded, the Bid Schedule becomes the Schedule of Contract Prices.)

Bidder - Any qualified individual or legal entity submitting a proposal in response to an advertisement.

Biennium - For the State of Oregon, a two-year period, always odd numbered years, starting July 1 and ending two years later on June 30.

Bleeding (Concrete) - The movement of mixing water to the surface of freshly placed concrete.

Bowstring Truss - A general term applied to a truss of any type having a polygonal arrangement of its top chord members conforming to or nearly conforming to the arrangement required for a parabolic truss.

Box Beam - A hollow structural beam with a square, rectangular, or trapezoidal cross-section.

Box Culvert - A culvert of rectangular or square cross-section.

Breakaway - A design feature that allows a device such as a sign, luminaire, or traffic signal support to yield or separate upon impact. The release mechanism may be a slip plane, plastic hinges, fracture elements, or a combination of these.

Bridge - A structure spanning and providing passage over a river, chasm, road, or the like, having a length of 20 feet or more from face to face of abutments or end bents, measured along the roadway centerline.

Bridge Approach - Includes the embankment materials and surface pavements that provide the transition between bridges and roadways.

Bridge End Panel - A reinforced concrete slab placed on the approach embankment adjacent to and usually resting upon the abutment back wall; the function of the approach slab is to carry wheel loads on the approaches directly to the abutment, thereby eliminating any approach roadway misalignment due to approach embankment settlement.

Bridging - A carpentry term applied to the cross-bracing fastened between timber beams to increase the rigidity of the floor construction, distribute more uniformly the live load and minimize the effects of impact and vibration.

Bridge Railing - A longitudinal barrier whose primary function is to prevent an errant vehicle from going over the side of the bridge structure.

Brush Curb - A curb 10” or less in width, which prevents a vehicle from brushing against the railing or parapet.

Buckle - To fail by an inelastic change in alignment as a result of compression.

Built-Up Member - A column or beam composed of plates and angles or other structural shapes united by bolting, riveting or welding.

Bulkhead – A partition built into wall forms to terminate each placement of concrete.

Buoyancy - Upward force exerted by the fluid in which an object is immersed.

Bushings - A lining used to reduce friction and/or insulate mating surfaces usually on steel hanger plate bearings.

Butt Splice - A splice where the ends of two adjoining pieces of metal in the same plane are fastened together by welding.

Butt Weld - A weld joining two abutting surfaces by combining weld metal and base metal within an intervening space.

C

Cable-Stayed Bridge - A bridge in which the superstructure is directly supported by cables, or stays, passing over or attached to towers located at the main piers.

CADD - Computer-Aided Design and Drafting.

Caisson - A watertight box of wood or steel sheeting; or a cylinder of steel and concrete, used for the purpose of making an excavation. Caissons may be either open (open to free air) or pneumatic (under compressed air).

Camber - A predetermined vertical curvature built into a structural member, to allow for deflection and/or vertical grade.

Cast-in-Place - The act of placing and curing concrete within formwork to construct a concrete element in its final position.

Catch Basin - A receptacle, commonly box shaped and fitted with a grilled inlet and a pipe outlet drain, designed to collect the rain water and floating debris from the roadway surface and retain the solid material so that it may be periodically removed.

Catenary - The curve obtained by suspending a uniform rope or cable between two points.

Cathode - The negatively charged pole of a corrosion cell that accepts electrons and does not corrode.

Cathodic Protection - A means of preventing metal from corroding; this is done by making the metal a cathode through the use of impressed direct current and by attaching a sacrificial anode.

Catwalk - A narrow walkway to provide access to some part of a structure.

Chain Drag - A series of short medium weight chains attached to a T-shaped handle; used as a preliminary technique for inspecting a large deck area for delamination.

Chamfer – A beveled edge formed in concrete by a triangular strip of wood (chamfer strip) placed in a form corner.

Change Order - A written order issued by the Engineer to the Contractor modifying work required by the contract and establishing the basis of payment for the modified work.

Chord - A generally horizontal member of a truss.

Clay - Soil passing a No. 200 sieve that can be made to exhibit plasticity (putty-like properties) within a range of water contents.

Clear Zone - Roadside border area, starting at the edge of the traveled way, that is available for safe use by errant vehicles. Establishing a minimum width clear zone implies that rigid objects and certain other hazards with clearances less than the minimum width should be removed and relocated outside the minimum clear zone, or remodeled to make breakaway, shielded, or safely traversable.

Closed Spandrel Arch - A stone or reinforced concrete arch span having spandrel walls to retain the spandrel fill or to support either entirely or in part the floor system of the structure when the spandrel is not filled.

Cobbles - Particles of rock, rounded or not, that will pass a 12” square opening and be retained on a 3” sieve.

Cofferdam - A barrier built in the water so as to form an enclosure from which the water is pumped to permit free access to the area within.

Cohesionless Soil - A soil that when unconfined has little or no strength when air-dried and that has little or no cohesion when submerged.

Cohesive Soil - A soil that when unconfined has considerable strength when air-dried and that has significant cohesion when submerged. Clay is a cohesive soil.

Commission - The Oregon Transportation Commission.

Composite Section - Two sections made of the same or different materials together to act as one integral section; such as a concrete slab on a steel or prestressed girder.

Compression Seals - A preformed, compartmented, elastomeric (neoprene) device, which is capable of constantly maintaining a compressive force against the joint interfaces in which it is inserted.

Concept Plans – plans to determine the basic features of a project including alignments, typical sections, slopes, preliminary drainage and TS&L bridge plans.

Concrete Overlay – 1.5” to 2” of concrete placed on top of the deck, used to extend the life of the deck and provide a good riding surface.

Contract - The written agreement between the Division and the Contractor describing the work to be done and defining the obligations of the Division and the Contractor.

Contract Plans - Detailed drawings and diagrams usually made to scale showing the structure or arrangement, worked out beforehand, to accomplish the construction of a project and/or object(s).

Contract Time - The number of calendar days shown in the proposal which is allowed for completion of the work.

Contraction Joint - A joint in concrete that does not provide for expansion but allows for contraction or shrinkage by the opening up of a crack or joint.

Contractor - The individual or legal entity that has entered into a contract with the Division.

Coordinates - Linear or angular dimensions designating the position of a point in relation to a given reference frame. It normally refers to the State Plane Coordinate System.

Core - A cylindrical sample of concrete removed from a bridge component for the purpose of destructive testing.

Counterfort Wall - A reinforced concrete retaining wall whose vertical stem has triangular-shaped ribs projecting into the soil and spaced at regular intervals to provide strength and stability.

Crash Cushion - An impact attenuator device that prevents an errant vehicle from impacting fixed object hazards by gradually decelerating the vehicle to a safe stop or by redirecting the vehicle away from the

hazard.

Crash Tests - Vehicular impact tests by which the structural and safety performance of roadside barriers and other highway appurtenances may be determined. Three evaluation criteria are considered, namely (1) structural adequacy, (2) impact severity, and (3) vehicular post-impact trajectory.

Creep - Time dependent inelastic deformation under elastic loading of concrete or steel resulting solely from the presence of stress.

Cross-bracing - Bracing used between stringers and girders to hold them in place and stiffen the structure.

Cross-section - The exact image formed by a plane cutting through an object usually at right angles to a central axis.

Crown Section - Roadway section with the height of the center of the roadway surface above its gutters.

Culvert - Federal Highway Administration definition: "A structure not classified as a bridge having a span of 20 feet or less spanning a watercourse or other opening on a public highway"; a conduit to convey water through an embankment.

Curb - A vertical or sloping member along the edge of a pavement or shoulder forming part of a gutter, strengthening or protecting the edge, and clearly defining the edge of vehicle operators. A curb is a horizontal offset varying from 10" to less than 18". The surface of the curb facing the general direction of the pavement is called the "face".

Curing - The preparation of a material by chemical or physical processing for keeping or use; treating concrete by covering its surface with some material to prevent the rapid evaporation of water.

Cut-Off-Wall - A wall built at the end of a culvert apron to prevent the undermining of the apron.

D

Dead End - End of post-tensioned bridge where tendons are anchored but no jacking takes place (opposite of jacking end).

Dead Load - Structure weight including future wearing surface on deck and attachments.

Deadman - A concrete mass, buried in the earth behind a structure, that is used as an anchor for a rod or cable to resist horizontal forces that act on the structure.

Deformed Bars - Concrete reinforcement consisting of steel bars with projections or indentations to increase the mechanical bond between the steel and concrete.

Delamination - Subsurface separation of concrete into layers.

Department - The Department of Transportation of the State of Oregon.

Design Volume or Design Hourly Volume - A volume determined for use in design representing traffic expected to use the highway. Unless otherwise stated, it is an hourly volume.

Diaphragm - Structural: A structural member used to tie adjoining girders together and stiffen them in a lateral direction as well as to distribute loads.

Diamond Grinding - Process to abrade or remove a surface, such as concrete, by the cutting action of

rotating circular blade with diamond-tipped teeth.

Direct Tension Indicator - Load-indicating washer for bolts.

Doby - A precast block of concrete of various sizes used to support or provide clearances between reinforcing bars and formwork.

Dolphins - A group of piles or sheet piling driven adjacent to a pier. Their purpose is to prevent extensive damage or possible collapse of a pier from a collision with a ship or barge.

Draped Strands - Strand pattern for prestressing strands, where strands are draped to decrease the prestressing stress at the ends of the girder where the applied moments are small.

Drift Pin - A metal pin, tapered at both ends, used to draw members of a steel structure together by being driven through the corresponding bolt holes.

Drip Groove - A groove formed into the underside of a projecting concrete sill or coping to prevent water from following around the projection.

E

E - modulus of elasticity of a material; the stiffness of a material.

E&C – Engineering & Contingencies. Engineering costs are ODOT's costs to administer the construction contract. Contingencies are unforeseen costs due to construction extra work price agreements or types of problems caused by weather, accidents, etc. by the contract pay item.

Elastomeric Bearing Pads - Pads ½" and less in thickness made of all rubber-like material that supports girders and concrete slabs; pads over ½" in thickness consist of alternate laminations of elastomer and metal.

End-Bearing Pile - A pile which provides support primarily due to reaction at its tip.

Environmental Classes – Classes (1, 2 or 3) that ????????

Environmental Class I Environmental Impact Statement: Projects that normally involve significant changes in traffic capacities and patterns. These projects generally involve major right-of-way acquisitions. Both draft and final Environmental Impact Statements are required.

Environmental Class II Categorical Exclusions: Projects that normally involve the improvement of pavement conditions on traffic safety, but little, if any, change in traffic capacities or patterns. Right-of-way requirements must be minor. These projects are categorically excluded from further environmental documentation, unless permit requirements indicate otherwise.

Environmental Class III Environmental Assessment: Projects that do not clearly fall within Class I or Class II. These projects require assessments to determine their environmental significance.

Epoxy - A synthetic resin which cures or hardens by chemical reaction between components which are mixed together shortly before use.

Epoxy Coated Rebar - Steel reinforcement coated with a powdered epoxy resin, to prevent corrosion of the bar steel.

Expansion Bearings - Bearings that allow longitudinal movement of the superstructure relative to the

substructure and rotation of the superstructure relative to the substructure.

Expansion Device - A device placed at expansion points in bridge superstructures to carry the vertical bridge loads without preventing longitudinal movement.

Expansion Joint - A joint in concrete that allows expansion due to temperature changes, thereby preventing damage to the structure.

Extra Work - Work not included in any of the contract items as awarded but determined by the Engineer necessary to complete the project according to the intent of the contract. This may be paid on a negotiated price, force account, or established price basis.

Extrados - The curved edge of an arch rib or barrel formed by the intersection of the top and side arch surfaces.

F

Falsework - In general, a temporary construction work on which a main or permanent work is wholly or partially supported until it becomes self-supporting. For cast-in-place concrete or steel construction, it is a structural system to support the vertical and horizontal loads from forms, reinforcing steel, plastic concrete, structural steel, and placement operations.

Fatigue - The tendency of a member to fail at a lower stress when subjected to cyclical loading that when subjected to static loading.

Fatigue Crack - Any crack caused by repeated cyclic loading.

Federal-Aid System of Highways - The national system of interstate highways, Federal-aid highway system, system of secondary and feeder roads, Federal-aid grade crossing projects, federal forest highway systems and projects and other highway and related projects, all within the meaning of the Federal-Aid Road Act (1916), and all acts amendatory thereof and supplementary thereto, and the federal regulations issued under such acts.

Fender - A structure that acts as a buffer to protect the portions of a bridge exposed to floating debris and water-borne traffic from collision damage.

Fiscal Year - For the State of Oregon, July 1 through June 30 of the next year; for the Federal government, October 1 through September 30 of the next year. The Federal fiscal year (FY) is broken into quarters:
F1Q (October, November, December)
F2Q (January, February, March)
F3Q (April, May, June)
F4Q (July, August, September)

Felloe Guard - Timber curb, usually 10” x 12”, bolted to timber deck and timber rail post. Sometimes called wheel guard.

Filler Plate - A steel plate or shim used for filling in space between compression members.

Fixed Bearings - Bearings that do not provide for any longitudinal movement of the superstructure relative to the substructure, but allows for rotation of the superstructure relative to the substructure.

Flat Slab - A reinforced concrete superstructure that has a uniform depth throughout.

Flood Plain - An area that would be inundated by a flood.

Floodway - A stream channel plus any adjacent flood plain areas that must be kept free of encroachment so that the 100-year flood can be conveyed without substantial increases in flood heights.

Floor Beam - A transverse structural member that extends from truss to truss or from girder to girder across the bridge.

Flux - A material that protects the weld from oxidation during the fusion process.

Force Account Work - Items of extra work ordered by the Engineer that are to be paid for by material, equipment, and labor.

Forms - A structural system constructed of wood or metal used to contain the horizontal pressures exerted by plastic concrete and retain it in its desired shape until it has hardened.

Fracture Critical Members - Members of a bridge where a single fracture in a member can lead to collapse.

Fracture Mechanics - Study of crack growth in materials.

Free-Standing Retaining Wall – A retaining wall that is not part of the bridge abutment walls.

Friction Pile - A pile that provides support through friction resistance along the surface area of the pile.

Functionally Obsolete Bridges - Those bridges which have deck geometry, load carrying capacity (comparison of the original design load to the current state legal load), clearance, or approach roadway alignment which no longer meet the usual criteria for the system of which they are a part as defined by the Federal Highway Administration.

G

Gabions - Rock-filled wire baskets used to retain earth and provide erosion control.

Galvanic Action - Electrical current between two unlike metals.

Galvanize - To coat with zinc.

Geotextiles - Sheets of woven or non-woven synthetic polymers or nylon used for drainage and soil stabilization.

Girder - Main longitudinal load carrying member in a structure (beam).

Glare Screen - A device used to shield a driver’s eye from the headlights of an oncoming vehicle.

Grade Separation - A crossing of two highways or a highway and a railroad at different levels.

Gravity Wall - A retaining wall that is prevented from overturning by its weight alone.

Green Concrete - Concrete that has set but not appreciably hardened.

Grid Flooring - A steel floor system comprising a lattice pattern which may or may not be filled with concrete.

Grout - A mixture of cementitious material and water having a sufficient water content to render it a free-flowing mass, used for filling (grouting) the joints in masonry, for fixing anchor bolts and for filling post-tensioning ducts.

H

Hammerhead Pier - A pier that has only one column with a cantilever cap and is somewhat similar to the shape of a hammer.

Hanger Plate - A steel plate that connects the pins at hinge points thus transmitting the load through the hinge.

Haunch - An increase in depth of a structural member usually at points of intermediate support.

Haunched Slab - A reinforced concrete superstructure that is haunched (has an increased depth) at the intermediate supports.

Headwall - A concrete structure at the ends of a culvert to retain and protect the embankment slopes, anchor the culvert, and prevent undercutting.

High Performance Concrete (HPC) – Concrete with enhanced properties including higher strength, greater durability and decreased permeability.

High Performance Steel (HPS) - Steel with enhanced properties including increased durability and weldability.

Hinge - A device used to hold the ends of two adjoining girders together, but does not allow for longitudinal movement of the superstructure. A point in a structure where a member is free to rotate.

Holddown Device - A device used on bridge abutments to prevent girders from lifting off their bearings as a result of the passage of live load over the bridge.

Honeycomb - A surface or interior defect in a concrete mass characterized by the lack of mortar between the coarse aggregate particles.

Howe truss - A truss of the parallel chord type with a web system composed of vertical (tension) rods at the panel points with an X pattern of diagonals.

Hydration - The process by which cement combines with water to form a hard binding substance.

Hybrid Girder - A steel plate girder with the web steel having a lower yield strength than the steel in one or both flanges.

Hydrodemolition - Process to abrade or remove a surface, such as concrete, by streams of water ejected from a nozzle at high velocity.

I

Incidental Work - Work necessary for fulfillment of the contract but which is not listed as a pay item in the contract and for which no separate or additional payment will be made.

Initial Set (Concrete) - Initial stiffening of concrete, with time based upon penetration of a weighted test needle. In the field, it is commonly assumed to be the time when the dead weight of vibrator does not penetrate into the concrete.

Inlet Control - The case where the discharge capacity of a culvert is controlled at the culvert entrance by the depth of headwater and the entrance geometry, including barrel shape, cross-sectional area, and inlet edge.

Intermediate Stiffener - A vertical transverse steel member used to stiffen the webs of plate girders between points of support.

Internal File Number - Number assigned by the Bridge Front Office as part of office automation (computerized files) and used to track all files.

Invert - The bottom or lowest point of the internal surface of the transverse cross-section of a pipe.

Inventory Rating (Design Load) - Load level that produces normal design stresses in the structures. The inventory rated load is the load that can safely utilize an existing structure for an indefinite period of time.

International System of Units (SI) - The modernized metric system.

Intrados - The curved edge of an arch rib or barrel formed by the intersection of the bottom and side arch surfaces.

Isotropic - Have the same material properties in all directions, e.g., steel.

J

Jacking End - End of post-tensioned bridge where jacking takes place (opposite of dead end).

Jetting - Forcing water into holes in an embankment to settle or to compact the earth. Forcing water through holes in piles to install the piles to a specified depth before driving.

K

Key Number - Number assigned to a project by Program Section to identify it in the Project Control System (PCS). All structures in a project have the same key number.

Kilogram (kg) - The base unit for mass in the International System of Units (metric).

King Post Truss - Two triangular panels with a common center vertical; the simplest of triangular trusses.

L

Lacing - Small flat plates used to connect individual sections of built up members.

Laitance - A weak mortar that collects at the surface of freshly placed concrete, usually caused by an excess of mixing water or by excessive finishing.

Lamellar Tear - Incipient cracking between the layers of the base material (steel).

Lateral Bracing - Bracing placed in a horizontal plane between steel girders near the bottom and/or top flanges.

Latex Modified Concrete (LMC) - Emulsion of synthetic rubber or plastic obtained by polymerization used as

a concrete additive to decrease permeability.

Leaf - The movable portion of a bascule bridge which forms the span of the structure.

Lenticular Truss - A truss having parabolic top and bottom chords curved in opposite directions with their ends meeting at a common joint; also known as a fish belly truss.

Level of Performance - The degree to which a longitudinal barrier, including bridge railing, is designed for containment and redirection of different types of vehicles.

Liquid Penetrant Inspection - Nondestructive inspection process for testing for continuities that are open to the surface, by using a liquid dye.

Live Load - Force of the applied moving load of vehicles and/or pedestrians.

Load Rating - Evaluation of the safe live load capacity of the weakest member of a bridge.

LRFD - Load Resistance Factor Design.

Longitudinal Stiffener - A longitudinal steel plate (parallel to girder flanges) used to stiffen the webs of welded plate girders. Normally thicker webs are used to eliminate longitudinal stiffeners.

Low Relaxation Strands - Prestressing tendons that are manufactured by subjecting the strands to heat treatment and tensioning causing a permanent elongation. This increases the strand yield strength and reduces strand relaxation under constant tensile stress.

M

Magnetic Particle Inspection (MT) - Nondestructive inspection process for testing for the location of surface cracks or surface discontinuities, by applying dry magnetic particles to a weld area or surface area that has been suitably magnetized.

Microsilica (Silica Fume) (MC) - Very fine non-crystalline silica used as an admixture in concrete to improve the strength, permeability and abrasion resistance.

Minor Structure Concrete (MSC) - Nonstructural concrete furnished according to contractor proportioning, placed in minor structures and finished as specified. Previously called commercial concrete.

Modular Expansion Joints - Multiple, watertight joint assemblies for bridges requiring expansion movements greater than 4 inches.

Mud Sill - A timber platform laid on earth as a support for vertical members or bridge falsework.

Mylars - Full-size drawings on mylar. The final “legal” drawing used for signatures and printing contract plans.

N

NDT - Nondestructive testing, a method of checking the structural quality of materials that does not damage them.

Negative Moment - The moment causing tension in the top fibers and compression in the bottom fibers of a

structural member.

Negative Reinforcement - Reinforcement placed in concrete to resist negative bending moments.

Newton (N) - The derived unit for force (mass times acceleration or kg times m/s^2) in the International System of Units (metric).

Nominal - Used to designate a theoretical dimension, size, or slope that may vary from the actual by a very small or negligible amount. Example: a 1" nominal diameter steel pipe has an actual 0.957" inside diameter.

Nominal Pile Resistance – LRFD term for the maximum axial pile bearing resistance. Equivalent to the ultimate pile capacity term used in allowable stress design.

Non-Redundant Structure - Type of structure with single load path, where a single fracture in a member can lead to the collapse of the structure.

Nosing – A bulkhead at the ends of bridges or at expansion joints made of a durable material to protect and reinforce the slab edge. It also provides a smooth edge or surface at expansion joints to facilitate installation and provide a better seal.

O

Operating Rating (Permit Loads) - The absolute maximum permissible stress level to which a structure may be subjected. It is that stress level that may not be exceeded by the heaviest loads allowed on the structure. Special permits for heavier than normal vehicles shall be issued only if such loads are distributed so as not to produce stress in excess of the operating stress.

Outlet Control - The case where the discharge capacity of a culvert is controlled by the elevation of the tail water in the outlet channel and the slope, roughness, and length of the culvert barrel, in addition to the cross-sectional area and inlet geometry.

Orthotropic - A description of the physical properties of a material that has pronounced differences in two or more directions at right angles to each other.

P

Parapet - A low concrete rail designed and placed to prevent traffic from passing over the edge of a bridge deck or end of box culvert.

Pascal (Pa) - The derived unit for pressure or stress ($Pa=N/m^2$) in the International System of Units (metric).

Paving Dam – (see Nosing) - – A bulkhead at the ends of bridges or at expansion joints made of a durable material to protect and reinforce the slab edge and provide a stopping place for the wearing surface.

Paving Ledge – A ledge or corbel attached to the end beam of a bridge, to provide support for a current or future end panel.

Performance Level - See Level of Performance.

Pier - Intermediate substructure unit of a bridge. Current terminology is bent.

Pile - A long, slender piece of wood, concrete, or metal to be driven, jetted, or cast-in-place into the earth or river bed to serve as a support or protection.

Pile Bent - A pier where the piles are extended to the pier cap to support the structure.

Pile Cap - A member, usually of reinforced concrete, covering the tops of a group of piles for the purpose of tying them together and transmitting to them as a group the load of the structure that they support.

Pipe Arch - A conduit in the form of a broad arch with a slightly curved integral bottom.

Plastic Deformation - Deformation of material beyond the elastic range.

Positive Moment - In a girder the moment causing compression in the top flange and tension in the bottom flange.

Post-Tensioning - Method of prestressing in which the tendon is tensioned after the concrete has cured.

Pot Bearing - A bearing type that allows for multi-directional rotation by using a neoprene or spherical bearing element.

Prestress Camber - The deflection in prestressed girders (usually upward) due to the application of the prestressing force.

Pratt Truss - A truss with parallel chords and a web system composed of vertical posts with diagonal ties inclined outward and upward from the bottom chord panel points toward the ends of the truss; also known as N-truss.

Preliminary Plans – 85-90% complete plans, normally sent at 20 weeks.

Prestressed Concrete - Concrete in which there have been introduced internal stresses (normally pretensioned steel) of such magnitude and distribution that the stresses resulting from given external loadings are counteracted to a desired degree

Pretensioned - Any method of prestressing in which the strands are tensioned before the concrete is placed.

Project Manager - The Engineer's representative who directly supervises the engineering and administration of a contract.

Proposal - A written offer by a bidder on forms furnished by the Division to do stated work at the prices quoted.

PS&E - Literally, Plans, Specifications, and Estimates. Usually it refers to the time when the plans, specifications, and estimates on a project have been completed and referred to FHWA for approval. When the PS&E has been approved, the project goes from the preliminary engineering phase to the construction phase.

Pumping - The ejection of mixtures of water, clay and/or silt along or through transverse or longitudinal joints, crack or payment edges, due to vertical movements of the roadway slab under traffic.

Q

Queen-post Truss - A parallel chord type of truss having three panels with the top chord occupying only the length of the center panel; unless center panel diagonals are provided, it is a trussed beam.

R

Radiographic Inspection - Nondestructive inspection process where gamma rays or X rays pass through the object and cast an image of the internal structure onto a sheet of film as the result of density changes.

Redundant Structure - Type of structure with multiple-load paths where a fracture in a single member cannot lead to the collapse of the structure.

Reflection Crack - A crack appearing in a resurfacing or overlay caused by movement at joints or cracks in the underlying base or surface.

Reinforced Pile Tip - Metal reinforcement fastened to the pile tip to protect it during driving.

Residual Camber - Camber due to the prestressing force minus the dead load deflection of the girder.

Right of Way - Land, property, or property interest, usually in a strip, acquired for or devoted to transportation purposes.

Riprap - A facing of stone used to prevent erosion. It is usually dumped into place, but is occasionally placed by hand.

Roadside Barrier - A longitudinal barrier used to shield roadside obstacles or non-traversable terrain features. It may occasionally be used to protect pedestrians from vehicle traffic.

Roadway - The portion of a highway, including shoulders, for vehicular use.

Rubble - Irregularly shaped pieces of varying size stone in the undressed condition obtained from a quarry.

S

Sacrificial Anode - The anode in a cathodic protection system.

Sand - Particles of rock that will pass a No. 4 sieve and be retained on a No. 200 sieve.

Scaffolding - Temporary elevated walkway or platform to support workmen, materials and tools.

Scarify - To loosen, break up, tear up, and partially pulverize the surface of soil, or of a road.

Scour - Erosion of a river bed area caused by water flow.

Scour Protection - Protection of submerged material by steel sheet piling, riprap, mattress, or combination of such methods.

Screeding - The process of striking off excess material to bring the top surface to proper contour and elevation.

Seal - A concrete mass (usually not reinforced) poured under water in a cofferdam that is designed to resist hydrostatic uplift. The seal facilitates construction of the footing in dry conditions.

Shear Connector - A connector used to joint cast-in-place concrete to a steel section and to resist the shear at the connection.

Shear Lag - Nonuniform stress pattern due to ineffective transmission of shear.

Shed Roof - Roadway section with the height of one gutter greater than the centerline and other gutter.

Sheet Pile - A pile made of flat or arch cross-section to be driven into the ground or stream bed and meshed or interlocked with like members to form a wall, or bulkhead.

Sheet Pile Cofferdam - A wall-like barrier composed of driven piling constructed to surround the area to be occupied by a structure and permit dewatering of the enclosure so that the excavation may be produced in the open air.

Shoofly - Detour alignment of temporary railroad track and bridge around the site of a permanent railroad bridge replacement.

Shotcrete - Mortar or concrete pneumatically projected at high velocity onto a surface.

Shoulders - The portions of the roadway between the traveled way and the inside edges of slopes of ditches or fills, exclusive of auxiliary lanes, curbs, and gutters.

Shy Distance (E-Distance) - The distance from the edge of the traveled way beyond which a roadside object will not be perceived as an immediate hazard by the typical driver, to the extent that the vehicle's placement or speed will be changed.

Shrinkage - Contraction of concrete due to drying and chemical changes, dependent on time.

Silt - Soil passing a No. 200 sieve that is non-plastic or exhibits very low plasticity.

Simple Spans - Spans with the main stress carrying members non-continuous, or broken, at the intermediate supports.

Skew or Skew Angle - The acute angle formed by the intersection of a line normal to the centerline of the roadway with a line parallel to the face of the abutments or piers, or in the case of culverts with the centerline of the culverts. Left hand forward skew indicates that, look up station, the left side of the structure is further up station that the right hand side. Right hand skew indicates that the right side of structure is further up station that the left side.

Slip Base - A structural element at or near the bottom of a post or pole that will allow release of the post from its base upon impact while resisting wind loads.

Slope - The degree of inclination to the horizontal. It is sometimes described by such adjectives as steep, moderate, gentle, mild or flat.

Slope Paving - Pavement placed on the slope in front of abutment to prevent soil erosion.

Soffit - The bottom surface of a beam or an arch rib or barrel.

Spandrel - The area between the roadway and the arch in the side view of an arch bridge.

Special Provisions - The special directions, provisions, and requirements peculiar to the project that augment the standard specifications. They are commonly referred to as "specials".

Specifications - The body of directions, provisions, and requirements, together with written agreements and all documents of any description, made or to be made, pertaining to the method or manner of performing the work, the quantities, and the quality of materials to be furnished under the contract.

Spread Footing - A footing that is supported directly by soil or rock.

Spur Dike - A wall or mound built or extended out from the upstream side of an abutment used for training the stream flow to prevent erosion of stream bank. May also be used where there is no bridge, but the stream flows along the side of highway embankment.

Stainless Steel Teflon Bearings - Incorporated stainless steel and teflon with steel to provide the necessary expansion movement.

St. Venant Torsion - Uniform torsion resulting in no deformation of the cross-section.

State Plane Coordinates - The plane-rectangular coordinate system established by the United States Coast and Geodetic Survey. Plane coordinates are used to locate geographic position.

Station - A distance of 100 feet measured horizontally.

Stirrup - Vertical U-shaped or rectangular shaped bars placed in concrete beams to resist the shearing stresses in the beam.

Stress Relieved Strands - Any prestressing tendons that are manufactured by relieving the high residual stresses that were introduced into the steel during the wire drawing and stranding operations. Stress relieving is not a heat treatment and does not change the strand yield strength.

Strip Seal Joint - Molded neoprene glands inserted and mechanically locked between armored interfaces of extruded steel sections.

Structurally Deficient Bridges - Those bridges which have been (1) restricted to light vehicles only, (2) closed, or (3) require immediate rehabilitation to remain open, as defined by the Federal Highway Administration.

Subgrade - The top surface of completed earthwork on which subbase, base, surfacing, pavement, or a course of other material is to be placed.

Substructure - Those parts of a structure which support the superstructure, including bents, piers, abutments, and integrally built wingwalls, up to the surfaces on which bearing devices rest. Substructure also includes portions above bearing surfaces when those portions are built integrally with a substructure unit (e.g. backwalls of abutments). When substructure and superstructure elements are built integrally, the division between substructure and superstructure is considered to be at the bottom soffit of the longitudinal or transverse beam, whichever is lower. Culverts and rigid frames are considered to be entirely substructure.

Sufficiency Rating - A method of evaluating data by calculating four separate factors to obtain a numeric value which is indicative of bridge sufficiency to remain in service. The result of this method is a percentage in which 100 percent would represent an entirely sufficient bridge and zero percent would represent an entirely insufficient or deficient bridge.

Superelevation - The difference in elevation between the inside and outside edges of a roadway in a horizontal curve; required to counteract the effects of
centrifugal force.

Superplasticizer - A high range water-reducing admixture that increases the slump of freshly mixed concrete without increasing the water content.

Superstructure - Those parts of a structure above the substructure, including bearing devices.

Surcharge - Any load that causes thrust on a retaining wall, other than backfill to the level of the top of the

wall. Also preloading of an embankment to minimize the time for initial consolidation of the subsurface soils.

Suspension Bridge - A bridge in which the floor system is supported by catenary cables which are supported upon towers and are anchored at their extreme ends.

Suspender - A wire cable, metal rod or bar connected to a catenary cable of a suspension bridge at one end and the bridge floor system at the other, thus transferring loads from the roadway to the main suspension members.

T

Tack Welds - Small welds used for temporary connections.

Telltale (Tattletale) - Any device designed to indicate movement of formwork or falsework.

Tendon - A name for prestressed reinforcing element whether wires, bars, or strands.

Tenon - A constant diameter extension welded to the tip of the tapered metal arm of a luminaire support pole to receive the luminaire.

Thixotropy - Property of a material that enables it to stiffen in a short period on standing, but to acquire a lower viscosity again on mechanical agitation. A property desirable for post-tensioning duct grout.

Three-Dimensional Finite Element Analysis - Analysis in which a three-dimensional continuum is modeled as an assemblage of discrete elements in three-dimensional space.

Three-Hinged Arch - An arch which is hinged at each support and at the crown.

Through Structure - A structure that has its floor connected to the lower portion of the main stress-carrying members, so that the bracing goes over the traffic. A structure whose main supporting members project above the deck or surface.

Tining - Is used on finished concrete deck or slab surfaces to provide friction and reduce hydroplaning. Grooves are placed in the plastic concrete or cut into the hardened concrete.

Torsional Stress - Shear stress on a transverse cross-section resulting from a twisting action.

Transformed Section - A hypothetical section of one material so as to have the same elastic properties as a section of two materials.

Transition - A section of barrier between two different barriers or, more commonly, where a roadside barrier is connected to a bridge railing or to a rigid object such as a bridge pier. The transition should produce a gradual stiffening of the approach rail so vehicular pocketing, snagging, or penetration at the connection can be avoided.

Traveled Way - The portion of the roadway for the movement of vehicles, exclusive of shoulders and auxiliary lanes.

Tremie - A pipe or tube through which concrete is deposited underwater.

Trial Batch - A batch of concrete prepared to establish or check proportions of the constituents.

Turnbuckle - A long, cylindrical, internally threaded nut used to connect the elements of adjustable rod and bar members.

Turn-of-the-Nut - A bolt-tightening method.

Two-hinged Arch - A rigid frame which may be arch-shaped or rectangular but is hinged at both supports.

U

Ultrasonic Inspection - A non-destructive inspection process where by an ultra-high frequency sound wave induced into a material is picked up in reflection from any interface or boundary.

Unbonded Strands - Strands so coated as to prevent their forming a bond with surrounding concrete. Used to reduce stress at the ends of a member.

Underpinning - The addition of new permanent support to existing foundations to provide additional capacity.

Uplift - A force tending to raise a structure or part of a structure and usually caused by wind and/or eccentric loads, or the passage of live-load over the structure.

Utility - A line, facility, or system for producing, transmitting, or distributing communications, power, electricity, heat, gas, oil, water, steam, waste, storm water not connected with highway drainage, or any other similar commodity which directly or indirectly serves the public. The term utility shall also mean the utility company, district, or cooperative, including any wholly owned or controlled subsidiary.

V

Vierendeel Truss - A Pratt truss without diagonal members and with rigid joints between top and bottom chords and the verticals.

Vibrator - An oscillating device inserted at selected locations to consolidate fresh concrete.

W

Wales - Horizontal support members in close contact with a row of sheet piles in a cofferdam or shoring wall. Sometimes called whalers.

Warrants - The criteria by which the need for a safety treatment or improvement can be determined.

Warren Truss - A triangular truss consisting of sloping members between the top and bottom chords and no verticals; members form the letter W.

Water/Cement Ratio - The weight of water divided by the weight of cement in a concrete; ratio controls the strength of the concrete.

Waterproofing Membranes - Impervious material overlaid with bituminous concrete to protect decks from the infiltration of chlorides and resulting deterioration.

Wearing Surface - The top layer of a pavement designed to provide structural values and a surface resistant to traffic abrasion.

Weep Hole - A drain hole through a wall to prevent the building up of hydraulic pressure behind the wall.

Weld Inspection - Covers the process, written procedure, and welding in process. Post weld heat maintenance if required, post weld visual inspection and non-destructive testing as specified in contract and Standard Specifications.

Welded-Wire Fabric - A two-way reinforcing mat, fabricated from cold-drawn steel wire, having parallel longitudinal wires welded at regular intervals to parallel transverse wires.

Well-Graded - An aggregate possessing a proportionate distribution of successive particle sizes.

Wetlands - Areas that are inundated or saturated by surface or ground water at a frequency and duration sufficient to support, and that under normal circumstances do support, vegetation typically adapted for life in saturated soil conditions. Wetlands generally include swamps, marshes, bogs, and similar areas.

Wheel Load – Half of an axle load.

Wingwall - A wall attached to the abutments of bridges or box culverts retaining the roadway fill. The sloping retaining walls on each side of the center part of a bridge abutment.

X

Y

Yield - Permanent deformation (permanent set) which a metal piece takes when it is stressed beyond the elastic limit.

Young's Modulus - modulus of elasticity of a material (E); or the stiffness of a material.

Z

APPENDIX – SECTION 1 – ABBREVIATIONS (INITIALISMS AND ACRONYMS)

A

A&E	Architectural and Engineering
AASHO	American Association of State Highway Officials (1921-1973)
AASHTO	American Association of State Highway and Transportation Officials (since 1973)
AB	Anchor bolt
AC	Asphalt Concrete
ACEC	American Council of Engineering Companies of Oregon
ACI	American Concrete Institute
ACP	Asphalt Concrete Pavement
ACT	Area Commission on Transportation
ACWS	Asphalt concrete wearing surface
ADA	Americans with Disabilities Act
ADT	Average daily traffic (see Definitions)
ADTT	Average Daily Truck Traffic
AEE	Association of Engineering Employees
AGC	Associated of General Contractors of America
AISC	American Institute of Steel Construction
AISI	American Iron and Steel Institute
AITC	American Institute of Timber Construction
a.k.a.	Also known as
AML	Automated Milepoint Log
AMT	Area Management Team
ANSI	American National Standards Institute
AOC	Association of Oregon Counties
AOH	Access Oregon Highways
A.P.	Angle Point
APA	American Plywood Association
APWA	American Public Works Association
AREA	American Railway Engineering Association
ARRA	American Response and Recovery Act
ARS	Accident Records System (Accident Data Unit, Transportation Research Section)
ARTBA	American Road and Transportation Builders Association
ASAP	As soon as possible
ASCE	American Society of Civil Engineers
ASCII	American Standard Code for Information Interchange (refers to files that are pure text)
ASTM	American Society for Testing and Materials
ATA	Agreement to Agree
ATC	Applied Technology Council
ATR	Automatic Traffic Recorder
ATPM	Asphalt-treated permeable material
AWPA	American Wood Products Association
AWS	American Welding Society

B

B-Team	Team of Bridge Engineering Section Supervisors & Engineers
BAMS	Bid Analysis Management System
BBS	Bulletin Board System (computers)
BDS	Bridge Design System (AASHTO software)
BIOS	Basic Input/Output System (computers)
BLM	Bureau of Land Management (U.S. Dept. of Interior)
BLT	Bridge Leadership Team
BMP	Best Management Practice
BMS	Bridge Management System
BNRR	Burlington Northern Railroad

Bot.	Bottom
BPR	Bureau of Public Roads (now FHWA)
BRASS	Bridge Rating and Analysis of Structural Systems (software)
Bt.	Bent
BUBB	Bargaining Unit Benefit Board
BVC	Begin vertical curve

C

C	Degrees Celsius
CAC	Citizens Advisory Committee or Community Action Committee
CAD	Computer-aided drafting/computer-aided design
CADD	Computer-aided drafting and design
CAE	Computer-aided engineering
CalTrans	California Department of Transportation
CCT	Concrete Control Technician
CETAS	Collaborative Environmental and Transportation Agreement for Streamlining
CD-ROM	Compact Disk - Read-Only Memory
CF	Cubic feet
CFS	Cubic Feet per Second
CICS	Customer Information and Control System (Transportation inventory and Mapping Unit software on the mainframe)
CIM	Corporate Information Management
CIP	Cast-in-place
CIS	Career Information System (Training & Employee Development Sect.)
CLT	Construction Leadership Team
CMP	Construction Mitigation Plan Construction Management Plan Corrugated metal pipe
COGO	Coordinate Geometry language
COM	Communications port (serial port on a computer)
CP	Cathodic protection
CPM	Critical Path Method (method of scheduling) Consultant Project Manager
CPU	Central Processing Unit (computers)
CQC	Complete Quadratic Combination (method of combining seismic forces or displacements)
CRF	Code of Federal Regulations
CRSI	Concrete Reinforcing Steel Institute
CRT	Cathode Ray Tube display (monitor)
CS^3	Context Sensitive and Sustainable Solutions
CY	Cubic yard
CZM	Coastal Zone Management

D

DB	Design-Build
DBA	Doing Business As
DBE	Disadvantaged Business Enterprises
DEC	Digital Equipment Corporation
DEIS	Draft Environmental Impact Statement
DEQ	Department of Environmental Quality (Oregon)
DHV	Design hourly volume
Dia.	Diameter
DL	Dead load
DLCD	Department of Land Conservation and Development (Oregon) (formerly LCDC)
DLT	Discipline Leadership Team
DOGAMI	Department of Geology and Mineral Industries (Oregon)

DM	District Manager
DMS	District Maintenance Supervisor (old)
DMV	Division of Motor Vehicles
DOJ	Department of Justice
DOS	Disk Operating System for personal computers
DS	Top of deck to streambed distance
DSL	Division of State Lands (Oregon)
DTI	Direct Tension Indicator (load indicating washer for bolts)

E

E	East
E&C	Engineering and Contingencies (used in cost estimates)
EA	Expenditure Account
	Environmental Assessment
EAC	Emulsified Asphalt Concrete
EAP	Employee Assistance Program
EB	Eastbound
ECL	East city limits
EEO	Equal Employment Opportunity program
EEO/AA	Equal Employment Opportunity/Affirmative Action
EF	Each face
EIS	Environmental Impact Statement
El.	Elevation
Elev.	Elevation
ELT	Environmental Leadership Team
Emb.	Embankment
EP	Edge of pavement
EPA	Environmental Protection Agency (U.S.)
ES	Edge of shoulder
ESA	Endangered Species Act or Environmental Site Assessment
EVC	End vertical curve
EW	Each way
Exp.	Expansion

F

F	Degrees Fahrenheit
FAPG	Federal Aid Policy Guide (replaced FHPM 12/9/91)
FAS	Federal Aid Secondary (class of highways)
FAT	File Allocation Table (on a computer disk)
FBN	Film base negative
FBPM	Film base positive matte
FEIS	Final Environmental Impact Statement
FEMA	Federal Emergency Management Agency
FF	Far face (don't use for "fill face")
FHP	Federal-Aid Highway Program
FHPm	Federal Highway Program Manual (replaced by FAPG)
FHWA	Federal Highway Administration (formerly BPR)
FIPS	Federal Information Processing Standards system (IBM software)
FIS	Flood Insurance Studies (conducted by FHWA)
FONSI	Finding Of No Significant Impact
FS	Far side
ft-k	foot-kips
ft-lbs	foot-pounds
FTA	Federal Transit Administration
FTP	File Transfer Protocol

G

Ga.	Gauge
GAO	General Accounting Office
GHLT	Geo-Hydro Leadership Team
GIS	Geographic Information System
GLO	Government Land Office
GPS	Global Positioning System
GR	Guard Rail
GSA	General Services Administration
GSP	Galvanized Steel Pipe
GUI	Graphical User Interface for computers (such as Windows)

H

HBP	Highway Bridge Program (funding)
HBR	Highway Bridge Replacement (type of funding)
HBRR	Highway Bridge Replacement and Rehabilitation (type of funding)
HDD	Hard Disk Drive
HIP	Highway Improvement Plan (6-year plan of ODOT)
HLT	Highway Leadership Team
HMAC	Hot Mix Asphalt Concrete
HOV	High Occupancy Vehicle
HP&R	Highway Planning & Research program
HQ	Headquarters
HS	High Strength
HSIS	Highway Safety Information System (FHWA database)
Ht.	Height
HW	High Water
HWM	High Water Mark

I

I/O	Input/Output
I4R	Interstate Resurfacing, Restoration, Rehabilitation and Reconstruction (funding category)
IAMP	Interchange Area Management Plan
IBM	International Business Machines
ID	Inside diameter
IDE	Internal Drive Electronics (type of computer hard disk)
IDT	Idaho Department of Transportation
IF	Inside face (don't use!)
IGA	Inter-Governmental Agreement
IO	Intermodal Oregon
ILT	Intermodal Leadership Team
IS	Information Systems
ISB	Information Systems Branch
ISPF	Integrated System Productivity Facility (IBM mainframe software)
ISTEA	Intermodal Surface Transportation Efficiency Act of 1991
IT	Information Technology
ITIS	Integrated Transportation Information System
ITS	Intelligent Transportation Systems
IWRC	Independent Wire Rope Core (cables)

J

J	Joule, metric energy unit
JCL	Job Control Language (mainframe)
JTA	Oregon Jobs and Transportation Act of 2009

K

k	Kilo, one thousand
K	Kip (kilopound, 1000 pounds)
kg	Kilogram, metric mass unit
km	Kilometer (1000 meters)
kN	KiloNewton, metric force unit
KSF	Kips per Square Foot
KSI	Kips per Square Inch

L

LAN	Local Area Network (computers)
Lbs	Pounds
LC	Length of curve
LCD	Liquid Crystal Display (computers)
LCDC	Land Conservation and Development Commission (Oregon) (now DLCD)
LF	Linear feet
LL	Live load
LMC	Latex Modified Concrete
LOC	League of Oregon Cities
LPA	Local Public Agency
LPT	Line Printer (parallel computer port)
LRFD	Load Resistance Factor Design
L.S.	Lump Sum
LSDC	Low slump dense concrete
LT	Leadership Team

M

m	Meter, metric length unit
	Milli, one thousandth
M	Mega, one million
MALT	Modes and Area Leadership Team
MAPS-21	Moving Ahead for Progress in the 21st Century (funding)
MBM,MFBM	Thousand feet board measure
MC	Microsilica modified concrete
MH	Manhole
MHz	MegaHertz (millions of cycles per second)
MLT	Maintenance Leadership Team
MP	Microfilm print
	Milepoint, milepost (even milepoint)
MPO	Metropolitan Planning Organization
MOA	Memorandum of Agreement
MOU	Memorandum Of Understanding
MSC	Minor structure concrete
MSCS	Management Scheduling Control System (to replace PCS)
MS-DOS	Microsoft Disk Operating System
MSDS	Material Safety Data Sheet
MSE	Mechanically Stabilized Earth (retaining walls)
MSL	Mean Sea Level
MTPA	Major Transportation Projects Agreement

N

N	North
	Newton, metric force unit
NAVD 88	North American Vertical Datum 1988
NB	Northbound
NBI	National Bridge Inventory

NBIS	National Bridge Inspection Standards
NCEER	National Center for Earthquake Engineering Research (Buffalo, NY)
NCHRP	National Cooperative Highway Research Program (from the Transportation Research Board)
NCL	North city limits
NEPA	National Environmental Protection Act of 1969
NF	Near face
NGVD	National Geodetic Vertical Datum (MSL = 0.0)
NHI	National Highway Institute
NHPP	National Highway Performance Program
NHS	National Highway System
NHTSA	National Highway Traffic Safety Administration
NICET	National Institute for Certification in Engineering Technologies
NMFS	National Marine Fisheries Service
NOAA	National Oceanic 7 Atmospheric Administration (U.S. Dept. of Commerce)
NSPE	National Society of Professional Engineers
NT	New Technology (new version of Microsoft Windows)
NTS	Not to Scale

O

OAR	Oregon Administrative Rule
OBIS	Oregon Bridge Inventory System
OC	On Center (center-to-center)
OCAPA	Oregon Concrete & Aggregate Producers Association, Inc.
OD	Outside Diameter
ODF&W	Oregon Department of Fish and Wildlife
ODOT	Oregon Department of Transportation
OERS	Oregon Emergency Response System
OG	Original Ground
OHP	Oregon Highway Plan
OIT	Oregon Institute of Technology
OMUTCD	Oregon Manual on Uniform Traffic Control Devices
OO, O-O	Out-to-out
OPEU	Oregon Public Employees Union
OPL	Office of Project Letting
OPO	ODOT Procurement Office
Ops.	Operations
ORS	Oregon Revised Statutes
OS	Operating System
OSHA	Occupational Safety and Health Administration (U.S.)
OSHD	Oregon State Highway Division
OSP	Oregon State Police
	Oregon State Parks
OSU	Oregon State University
OTC	Oregon Transportation Commission
OTIA	Oregon Transportation Investment Act (I, II, & III)
OTP	Oregon Transportation Plan
Oxing	Overcrossing
OZ	Ozalid print

P

Pa	Pascal, metric stress or pressure unit
PA	Price Agreement
PBLT	Planning Business Line Leadership Team
PC	Personal computer
	Point of curvature

P/C	Precast Concrete
PCA	Portland Cement Association
PCC	Portland Cement Concrete
	Point on compound curve
PCF	Pounds per Cubic Foot
PCI	Prestressed Concrete Institute
PCP	Prestressed concrete pipe
PCS	Project Control System (to be replaced by MSCS)
	Point of change from circular curve to spiral
PDG	Project Delivery Guide
PDLT	Project Delivery Leadership Team
PE	Professional Engineer (registered)
	Preliminary engineering
PEBB	Public Employees Benefit Board
PERS	Public Employees Retirement System
PI	Point of intersection
	Public Information
PL	Project Leader
	Performance Level of bridge rail
PM	Project Manager
PMC	Polymer-modified concrete
PMS	Pavement Management System
PMT	Photo transfer paper
PO	Purchase Order
POC	Point on circular curve
POR	Professional of Record
POS	Point on spiral
POT	Point on tangent
PR	Project Request (Federal-Aid Program)
	Public Relations
Prest.	Prestressed
PRC	Point of reverse curve
PRN	Printer port (parallel port on computer, =LPT)
PS	Point of change from tangent to spiral
P/S	Prestressed Concrete
PS&E	Plans, Specifications & Estimate
PSBS	Project Specifications Bid System
PSC	Point of change from spiral to circular curve
PSF	Pounds per Square Foot
PSI	Pounds per Square Inch
PSK	Personal Services Contract
PSU	Portland State University
PT	Point of tangency
P/T	Post-tensioned concrete
PTI	Post-Tensioning Institute
PUC	Public Utility Commission
PVC	Point on vertical curve
	Polyvinyl chloride
PVI	Point of vertical intersection
PWRR	Portland Western Railroad

Q

QA	Quality Assurance
QC	Quality Control
QCT	Quality Control Technician
QPL	Qualified Products Listing

R

R	Radius
R, 1R	Resurfacing
R.	Range (surveying)
R/D	Rough Draft
R/W	Right of Way
R&D	Research and Development
RAM	Random Access Memory
RBI	Region Bridge Inspector
RC	Reinforced Concrete
RCB	Reinforced Concrete Box
RCBC	Reinforced Concrete Box Culvert
RCBG	Reinforced Concrete Box Girder
RCDG	Reinforced Concrete Deck Girder
RCP	Reinforced Concrete Pipe
Rdwy.	Roadway
REA	Revised Environmental Assessment
Rev.	Revised; revision date
RFP	Request for Proposals
RFQ	Request for Qualifications
RLT	Roadway Leadership Team
RMS	Root Mean Square (statistical average)
ROD	Record of Decision
ROM	Read-Only Memory
RR	Railroad
RRR, 3R	Resurfacing, Restoration and Rehabilitation
RRRR, 4R	Resurfacing, Restoration, Rehabilitation and Reconstruction
RSA	Response Spectrum Analysis

S

S	South
S.	Section (surveying)
SAFETEA-LU	Safe, Accountable, Flexible, Efficient Transportation Equity Act: A Legacy of Users of 2005
SB	Southbound
SC	Structural Concrete
SCL	South city limits
SCSI	Small Computer Systems Interface (type of computer hard disk)
SEAO	Structural Engineers Association of Oregon
SEAOC	Structural Engineers Association of California
Sec.	Section (map location)
Sect.	Section (on a drawing)
SF	Square feet
SFC	Silica Fume Concrete
SFLMC	Silica Fume Latex-Modified Concrete
SH, Shld	Shoulder
SHPO	State Historic Preservation Office
SHRP	Strategic Highway Research Program
SI	"Systeme Internationale" (International System of units)
SI&A	Structure Inventory and Appraisal
SIMM	Single In-line Memory Module (type of memory chips)
SLT	Safety Leadership Team
SOQ	Statement of Qualifications
SPC	Seismic Performance Category
SPFPC	System Productivity Facility for Personal Computers (data file editing software)

SPIS	Safety Priority Index System
SPRR	Southern Pacific Railroad
SPT	Standard Penetration Test for soils
SR	Sufficiency Rating
SRCM	Soils and Rock Classification Manual (ODOT)
SRSS	Square Root of the Sum of the Squares (method of combining seismic forces or displacements)
SSDM	Strategic Systems & Data Management (a unit within Technical Services)
SSPC	Structural Steel Painting Council
STE	Supervising Transportation Engineer
STP	Surface Transportation Program
S.T.R.	Section, Township and Range (surveying)
STRAHNET	Strategic Highway Corridor Network
STIP	State Transportation Improvement Program
STRUDL	Structural Design Language
SW	Sidewalk
SY	Square Yard

T

T.	Township (surveying)
	Tangent
T&E	Threatened and Endangered
Tan.	Tangent
TAC	Technical Advisory Committee
TAG	Technical Advisory Group
TB	Test boring
TCP	Traffic Control Plan
TEAMS	Transportation Environment Accounting System
TF	Top Face
TFE	Polytetrafluoroethylene (sliding surface for bearings)
TH	Test hole
Thk	Thick, thickness
TIFIA	Transportation Infrastructure Finance and Innovation Act (FHWA)
TIP	Transportation Improvement Plan
TLT	Technical Leadership Team
TMOC	Transportation Management Operations Center
TMP	Traffic Management Plan
TP&DT	Temporary Protection and Direction of Traffic
TRB	Transportation Research Board
TS	Tube, Structural
TS&L	Type, Size and Location (formerly called preliminary)
TSF	Tons per Square Foot (don't use!)
TSO	Time Sharing Option (on mainframe computer)
TTS	Tracings To Specifications
Typ.	Typical

U

UBC	Uniform Building Code
UFAS	Uniform Federal Accessibility Standards
U of O	University of Oregon
UP	University of Portland
UPRR	Union Pacific Railroad
URLT	Utility Relocation Leadership Team
USACE, ACOE	U.S. Army Corps of Engineers
USC&GC	United States Coast and Geodetic Survey
USCG	United States Coast Guard

USFS	U.S. Forest Service (Dept. of Agriculture)
USFWS	U.S. Fish and Wildlife Service
USGS	United States Geological Survey
USRS	U.S. Reclamation Service
Uxing	Undercrossing

V

V.	Version (software)
Var.	Varies
VC	Vertical curve
VE	Value Engineering
VGA	Video Graphical Array (computers)
VM	Vicinity Map
VMT	Vehicle miles of travel

W

W	West
W/	With
W/O	Without
WAN	Wide Area Network (computers)
WATS	Wide Area Telephone Service
WB	Westbound
WCL	West city limits
WCLIB	West Coast Lumber Inspection Bureau
W.M.	Willamette Meridian
WOC	Work Order Contract
WS	Wearing surface
WSDOT	Washington State Department of Transportation
WSC	Wire Strand Core (cables)
Wt.	Weight
WWF	Welded Wire Fabric
WWM	Welded Wire Mesh
WWPA	Western Wood Products Association
WYSIWYG	What-you-see-is-what-you-get (computer interface)

X

X'Sect	Cross-section
XF	Xerox film
Xing	Crossing
XV	Xerox vellum

Y

Z

APPENDIX – SECTION 1.2 – AASHTO/BDDM CROSS-REFERENCE

Bridge Design and Drafting Manual		AASHTO LRFD Cross-References		
BDDM Section	**Title**	**LRFD Section**	**Title**	**Comments**
3.13.2 ~~1.1.2.2~~	Bridge Length	2.6.4.3	Bridge Waterway	BDDM adds specific design floods and minimum freeboard to AASHTO specs.
3.13.1(2) ~~1.1.2.3(2)~~	Structure Depth	2.5.2.6.3-1	Span to Depth Ratios	BDDM gives span-to-depth ratios for concrete bridges but leaves span-to-depth ratios for steel bridges to AASHTO.
3.13.1(2) ~~1.1.2.3(2)~~	Structure Depth	2.5.2.6.2	Criteria For Deflection	BDDM states that AASHTO optional live load deflection criteria is not required for bridges that satisfy the span-to-depth ratios in BDDM ~~2.5.2.6.3-1~~ 3.18.2(4)
3.12.1 ~~1.1.2.4~~	Structure Types and Economics	4.6.2.1.4, 5.14.4.1, 9.7.1.4	Slab Edge Beam Requirements	BDDM Yields to AASHTO Requirements. AASHTO requirements also apply to CIP voided slabs if design deviation is approved.
3.16.7.1 ~~1.1.3.1~~	Foundations and Hydraulics	2.6.4.4.2	Bridge Scour	BDDM states that bottom of spread footings should be 6 feet below normal streambed. AASHTO states that the bottom of footing should be below the scour depth.
1.10.5.3 ~~1.1.5.3~~	Spread Footing Foundation Design	10.6.1.2	Bearing Depth	BDDM states that spread footings should be at least 6 feet below streambed and also below the scour depth for the 500-year flood event. AASHTO states that the footings should be located to bear below the maximum anticipated depth of scour.
1.10.5.3(2) ~~1.1.5.3(2)~~	Bearing Resistance Factors	10.5.5.2.2	Spread Footings	BDDM resistance factors for bearing of spread footings are higher than those shown in Table 10.5.5.2.2 in the AASHTO Specs for extreme event conditions of scour and earthquake loading.

1.10.5.3(2) ~~1.1.5.3(2)~~	Spread Footing Stability	11.6.2.3	Overall Stability	BDDM specifies a factor of safety 1.5 for overall stability. AASHTO specifies phi factors for stability = 0.75 or 0.65 depending on geotechnical information.
1.10.5.4(1) ~~1.1.5.4(1)~~	Pile Resistance	10.7.3.8	Nominal Axial Pile Resistance	BDDM refers specifically to AASHTO specs for determining axial pile capacity.
1.10.5.5(1) ~~1.1.5.5(1)~~	Drilled Shaft Diameter	10.8.1.3	Shaft Diameter	BDDM states that smallest shaft diameter is 12 inches. AASHTO adds that if the shaft is to be manually inspected, the diameter should not be less than 30 inches.
1.10.5.5(1) ~~1.1.5.5(1)~~	Column Diameter	10.8.1.3	Maximum Column Size	AASHTO states that columns on top of drilled shafts can be the same size as the drilled shaft, but BDDM requires that columns be smaller than shafts by 6 inch or 1 foot depending on shaft diameter.
1.10.5.5(7) ~~1.1.5.5(7)~~	Shaft Settlement	10.8.2.2	Shaft Settlement	BDDM refers to AASHTO for the determination of drilled shaft settlement.
1.10.5.5(12) ~~1.1.5.5(12)~~	Shaft Reinforcement	5.13.4.6.3	Volumetric Reinforcement Ratio and transverse rebar spacing	BDDM overrides LRFD 5.13.4.6.3 because the shaft diameter is always larger than the column diameter.
1.10.5.5(12) ~~1.1.5.5(12)~~	Shaft Reinforcement	5.13.4.6.3	Volumetric Reinforcement Ratio and transverse rebar spacing	BDDM adds a formula for computing transverse reinforcement required in non-contact splice region.
1.10.5.5(14) ~~1.1.5.5(14)~~	Shaft Reinforcement Cover	5.12.3-1	Cover for Main Reinforcing Steel	BDDM provides specific reinforcement cover requirements for drilled shafts.
1.3.1(4) ~~1.1.7.1(4)~~	Load From Wearing Surface	3.5.1-1	Unit Weights	BDDM assumes 150 pcf for ACWS, but AASHTO assumes 140 pcf.
1.3.2(2) ~~1.1.7.2(2)~~	Pedestrian Structures	3.6.1.6	Pedestrian Loads	Both BDDM and AASHTO specify 85 psf

1.3.6 ~~1.1.7.3~~	Thermal Forces	3.12.2.1-1	Temperature Ranges	Temperature ranges vary slightly between BDDM and AASHTO for Moderate and Rigorous Climates
1.4.1 ~~1.1.7.4~~	Ductility, Redundancy, and Operational Importance	1.3.3, 1.3.4, 1.3.5	Ductility, Redundancy, and Operational Importance	BDDM requires State Bridge Engineer approval for Redundancy Factor less than 1.0, and it states that for the Operational Importance Factor, a value of 1.0 shall be used for all bridges, assuming all bridges to be "typical".
1.3.3 ~~1.1.7.5~~	Sidewalk Loading	3.6.1.6	Pedestrian Loads	BDDM adds specific details for applying vehicular live load to curb mountable sidewalks.
1.4.2 ~~1.1.7.6~~	Shear Correction Factor for Skewed Girders	4.6.2.2.3c	Skewed Bridges	BDDM includes additional design criteria for the application of the skew correction factor for computing shear in skewed beams.
1.11.2.3 ~~1.1.8.3~~	Wingwall Design	11.6.1.5.2	Wingwalls	BDDM adds bar extension requirements for abutments on stiff footings to distribute flexure. AASHTO does state that bar lengths should vary to avoid "planes of weakness"
1.17 ~~1.1.10~~	Seismic Design	3.10, 5.10.11, 5.13.4.6, 11.6.5, 11.8.6, 11.10.7	Earthquake Effects	BDDM specifies the use of AASHTO Guide Specifications for LRFD Seismic Bridge Design for projects initiated after May 1st 2009. For projects initiated before May 1st 2010, BDDM specifies the use of AASHTO LRFD Bridge Design Specifications. Additional requirements and guidelines for both AASHTO documents are included in the BDDM.
1.5.1 ~~1.1.12.1~~	Concrete General	5.4.2.1	Compressive Strength	BDDM has independent concrete classes.
1.5.1 ~~1.1.12.1~~	Concrete General	5.4.2.4	Modulus of Elasticity	BDDM and AASHTO have same formula
1.5.5.1.2 ~~1.1.13.1(2)~~	Minimum Bar Covering	5.12.3	Concrete Cover	BDDM and AASHTO have separate tables
1.5.5.1.3 ~~1.1.13.1(3)~~	Reinforcement for Shrinkage and Temperature	5.10.8	Shrinkage and Temperature Reinforcement	BDDM bases reinforcement area on concrete thickness only, but AASHTO bases reinforcement area on ratio of volume of section

				to perimeter of section. AASHTO also has additional required minimum spacing for specific elements.
1.5.5.1.6 ~~1.1.13.1(6)~~	Minimum Bar Spacing	5.10.3	Spacing of Reinforcement	BDDM specifies 2.5d for the bar spacing, but AASHTO specifies 1.5d for clear distance between bars. Both state 1.5 inches minimum clear between bars and 1.5(maximum aggregate size) for minimum clear between bars.
1.5.5.1.8 ~~1.1.13.1(8)~~	Compression Development Length	5.11.2.2.1	Compression Development Length	AASHTO gives two equations with the one that results in the lowest value controlling. BDDM specifies the largest value from the equations.
1.5.6.1 ~~1.1.14.1~~	Precast Prestressed Elements	5.9.4.1.2-1, 5.9.4.2.2-1	Tensile Stress Limits	AASHTO allows 0.19sqrt(f'c) for certain situations but BDDM allows only 0.0948sqrt(f'c)
1.5.8.8 ~~1.1.16.8~~	Post-Tension Strand Duct Placement	5.10.3.3.2	Post-Tensioning Ducts C-C Spacing	AASHTO specifies spacing requirements; BDDM doesn't call out spacing requirements.
1.14.1.2 ~~1.1.19.1~~	Elastomeric Bearing Pads	14.7.5, 14.7.6	Elastomeric Pads and Steel Reinforced Elastomeric Pads	BDDM specifies that AASHTO Method A should be used to design bearing pads unless there is a specific need to use AASHTO Method B.
1.14.1.3 ~~1.1.19.2~~	Proprietary Pot, Disc, Slide, Radial, or Spherical Bearings	5.4.2.3	Shrinkage and Creep	BDDM provides a simplified approach for determining creep and shrinkage coefficients.
1.9.1 ~~1.1.20.1~~	Deck Design and Detailing	9.7.2	Empirical Design of Decks	BDDM excludes the use of the Empirical Method in AASHTO for deck design
1.9.1 ~~1.1.20.1~~	Deck Design and Detailing	4.6.2.1	Decks	BDDM deck design tables utilize AASHTO specifications from LRFD 4.6.2.1 to develop reinforcement values.
1.14.2 ~~1.1.20.2~~	Deck Expansion Joint Seals	14.5.6.6	Compression and Cellular Seals	AASHTO specifies a maximum skew angle for compression joint seals equal to 20 degrees, but this limitation is not stated in the BDDM

				or Standard Drawing.
1.13.1.1 ~~1.1.21.1~~	Rail Selection	13.7.2	Test Level Selection Criteria	AASHTO Defines Test Level Criteria
1.13.1.1 ~~1.1.21.1~~	Rail Selection	A13.2	Traffic Rail Design Forces	AASHTO provides design forces in rails in Table A13.2-1
1.6.1 ~~1.2.1~~	Steel Girders	C6.13.6.1.4a	Flexural Members	BDDM modifies this AASHTO comment to reflect moment of inertia of the smaller section rather than the smaller flange.
1.4.1 ~~1.3.5~~	(Timber) Preservative Treatment	8.4.3.2	(Wood) Treatment Chemicals	AASHTO has specific requirements for the use of wood preservative chemicals on pedestrian bridges.
1.15.1 ~~1.4.2.1~~	Soundwalls, General	1-2.1.2 (AASHTO Guide Specs for Sound Barriers)	Wind Load	AASHTO Guide Specs for Sound Barriers provides wind load equations and exposure categories. Example designs are also provided
1.15.2 ~~1.4.2.2~~	Soundwall Seismic Load	1-2.1.3 (AASHTO Guide Specs for Sound Barriers)	Seismic Load	AASHTO Guide Specs for Sound Barriers provides equations and factors for seismic loads on sound barriers.
1.15.3 ~~1.4.2.3~~	Soundwall Overturning Factor of Safety	1-8.2 (AASHTO Guide Specs for Sound Barriers)	Spread Footings	BDDM uses AASHTO factors of safety with slight modifications. (Ice and snow load not included)
3.16.4.2 ~~1.4.8.1~~	Roadway Clearances	2.3.3.3	Highway Horizontal Clearances	AASHTO calls out horizontal clearance requirements that are consistent with the values shown in BDDM Figure 1.4.8.1B
1.38.4 ~~1.4.9.4~~	Falsework	Figure 16 (AASHTO Construction Handbook for Bridge Temporary Works)	Bridge Deck Falsework	See AASHTO Figure 16 for conceptual layout of deck overhang falsework.
1.38.6.2 ~~1.4.9.6~~	Cofferdams and Seals	Page 71 (AASHTO Construction	Sealing and Buoyancy Control	AASHTO confirms that force from sheet pile friction should not be included in uplift resistance.

		Handbook for Bridge Temporary Works)		
1.3.4 ~~1.6~~	ODOT Design Instructions for AASHTO LRFD Bridge Design Specifications	3.6.5	Vehicular Collision Force	BDDM adds specific requirements for barriers in front of obstacle components.
1.3.5 ~~1.6~~	ODOT Design Instructions for AASHTO LRFD Bridge Design Specifications	2.6.4, 3.7.5	Hydraulic Analysis	BDDM modifies AASHTO specs regarding scour depth and degradation and Extreme Limit States

APPENDIX – SECTION 1.11 – SUBSTRUCTURES

A1.11.1.7 END BENT DETAILS FOR PRESTRESSED SLABS AND BOXES

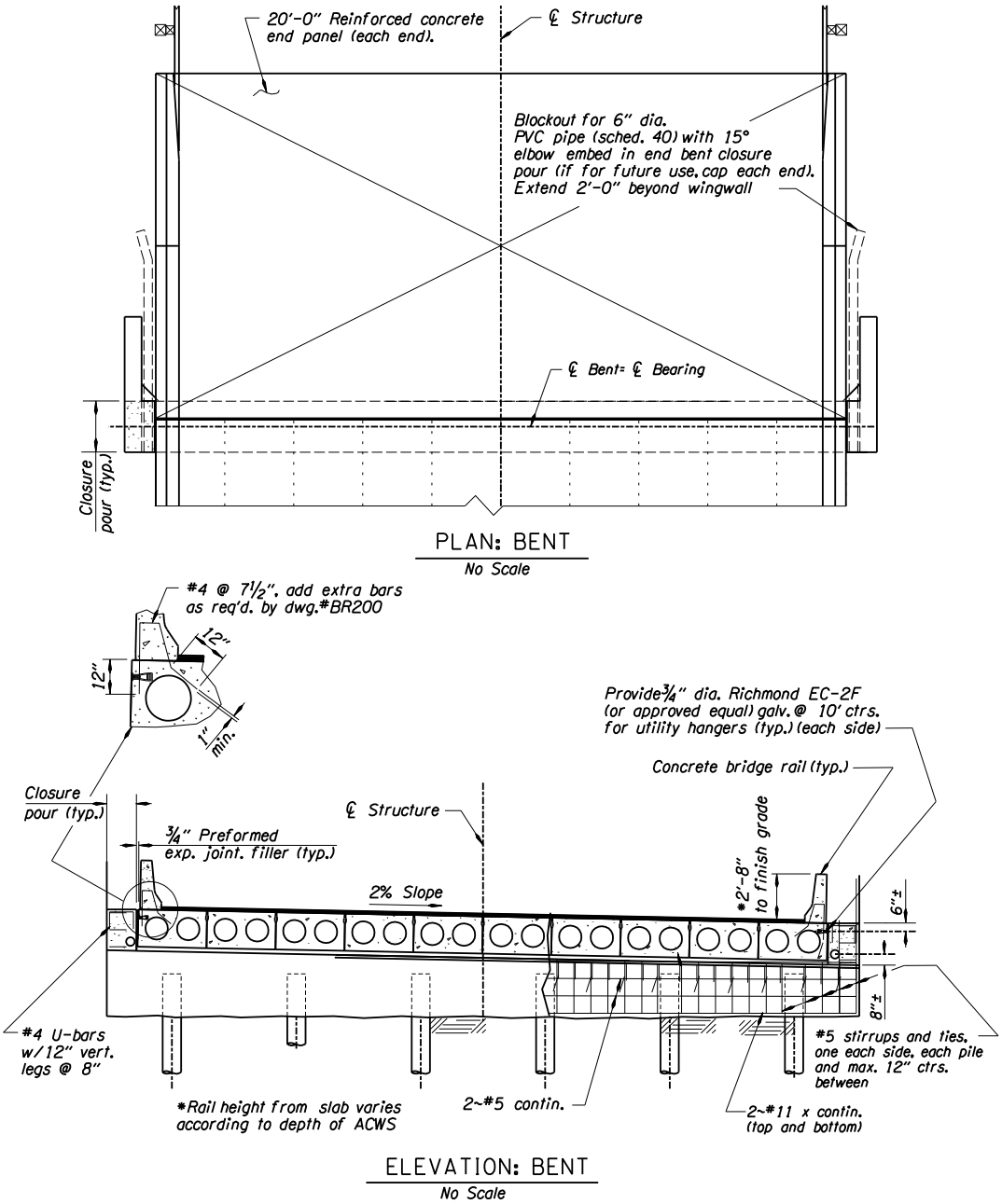

Figure A1.11.1.7A

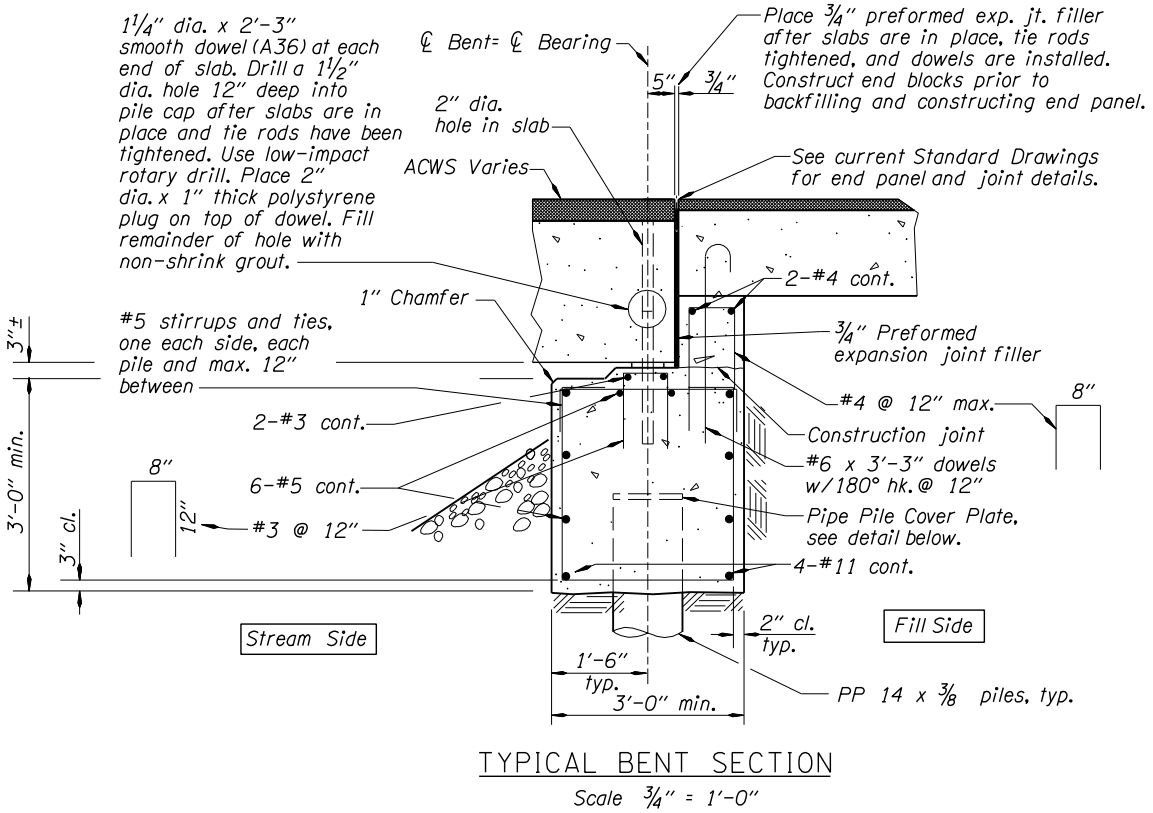

TYPICAL BENT SECTION

Scale ¾" = 1'-0"

Figure A1.11.1.7B

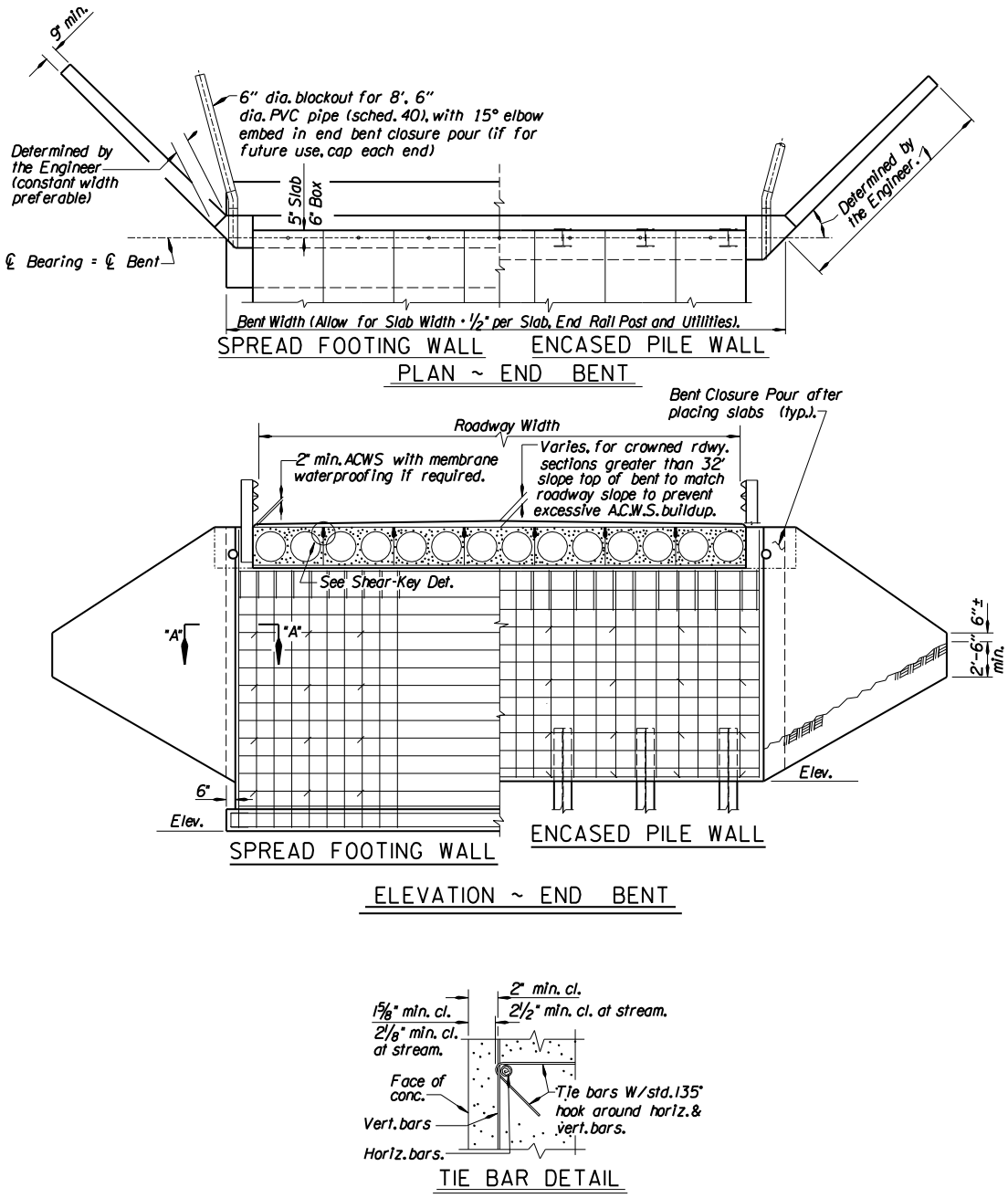

Figure A1.11.1.7C

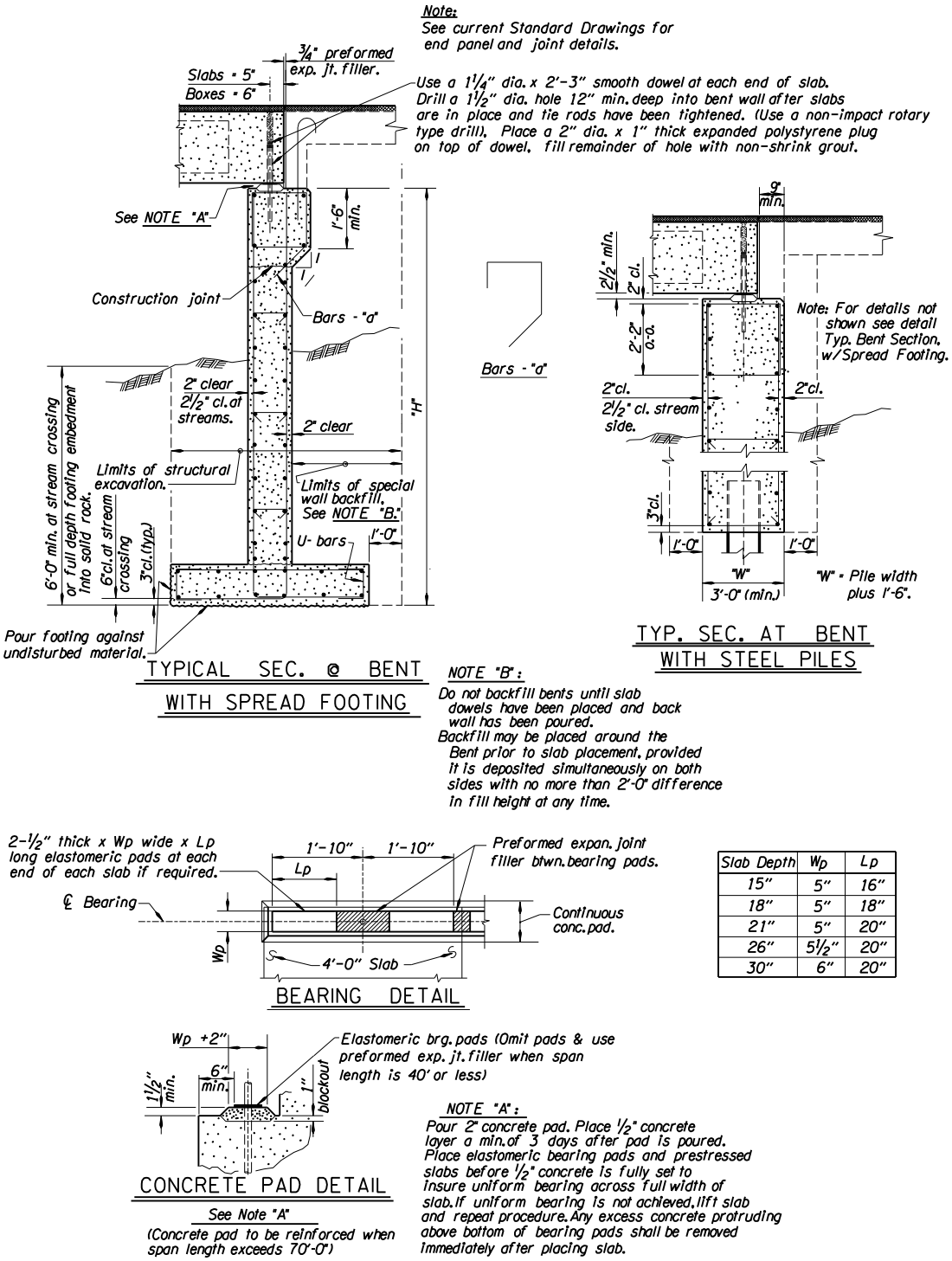

Slab Depth	Wp	Lp
15"	5"	16"
18"	5"	18"
21"	5"	20"
26"	5 1/2"	20"
30"	6"	20"

Figure A1.11.1.7D

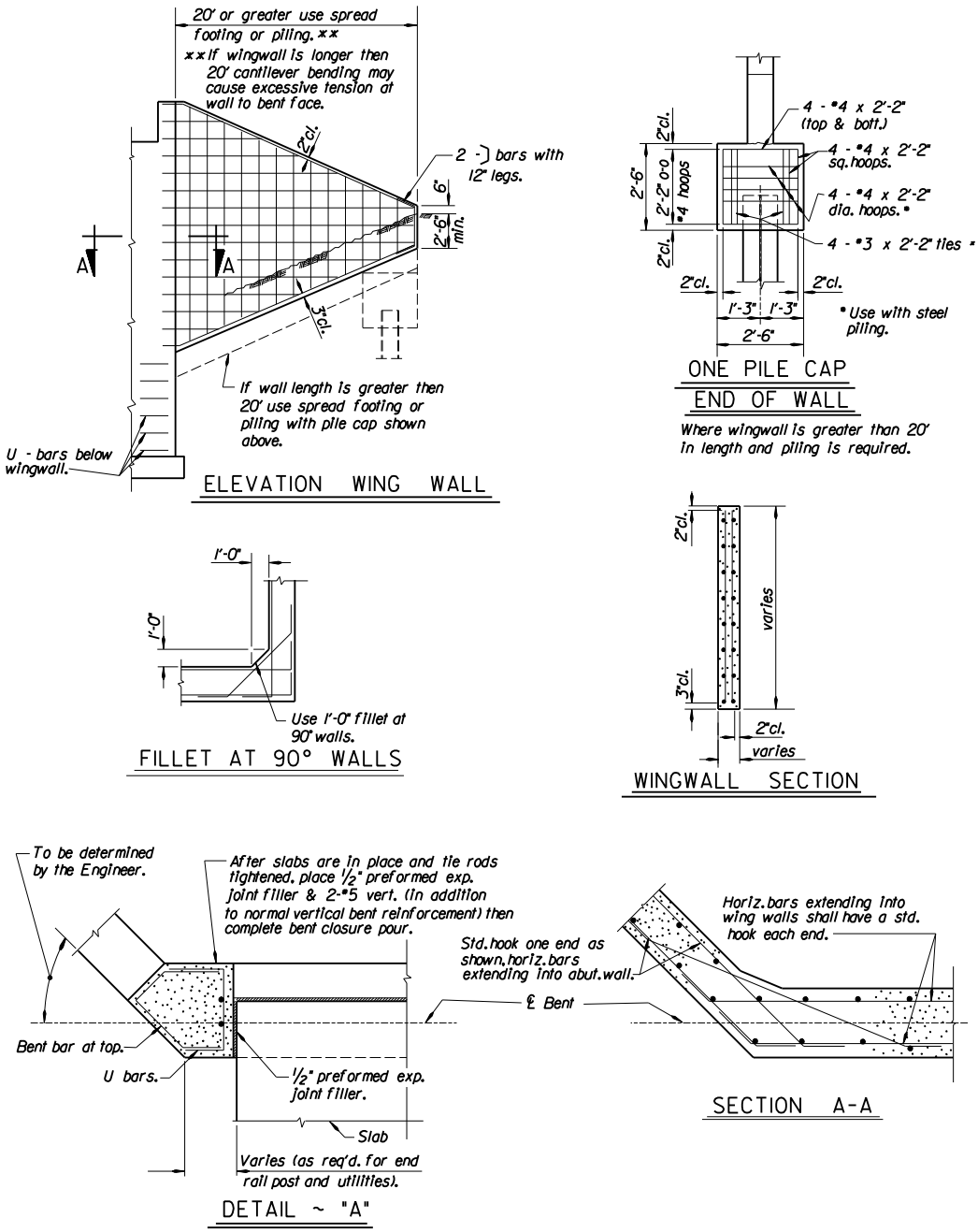

Figure A1.11.1.7E

A1.11.2.2 INTERIOR BENT DETAILS FOR PRESTRESSED SLABS AND BOXES

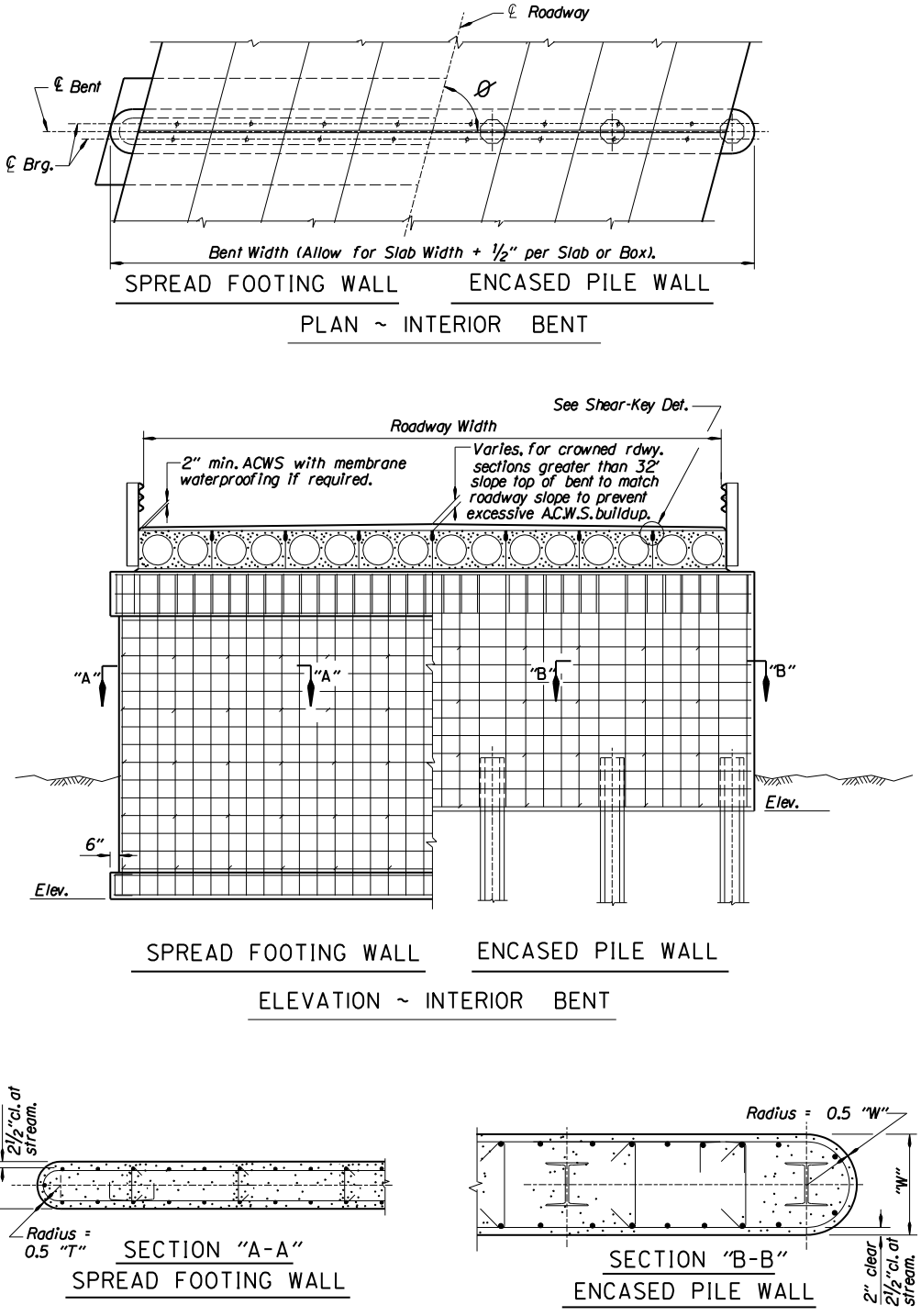

Figure A1.11.2.2A

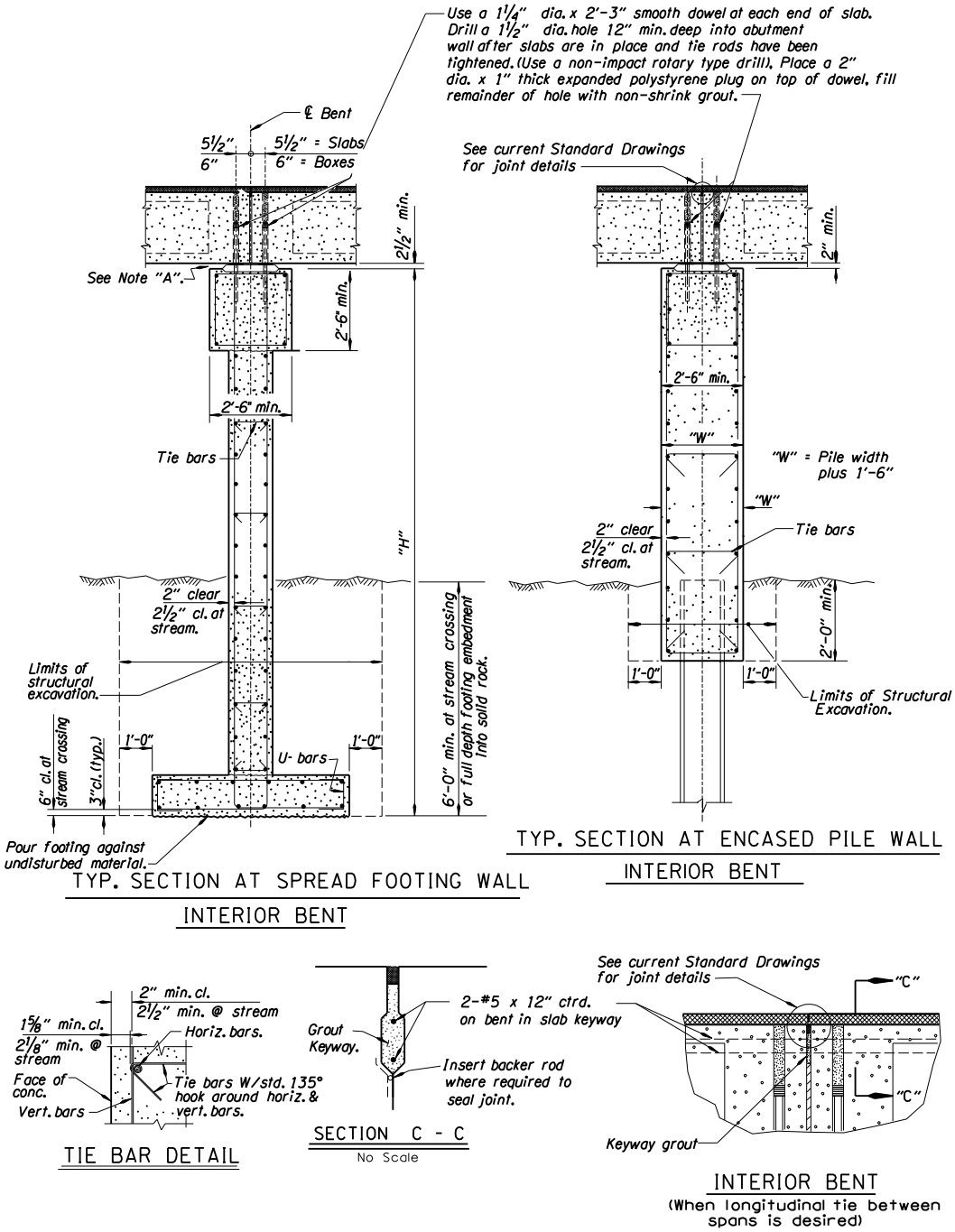

Figure A1.11.2.2B

Slab Depth	Wp	Lp
15″	5″	16″
18″	5″	18″
21″	5″	20″
26″	5½″	20″
30″	6″	20″

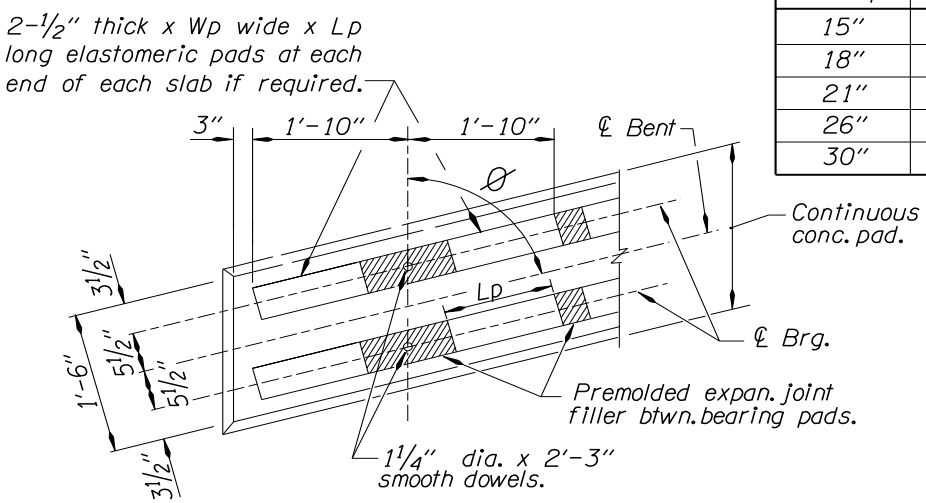

BEARING DETAIL
(PRESTRESSED SLABS)

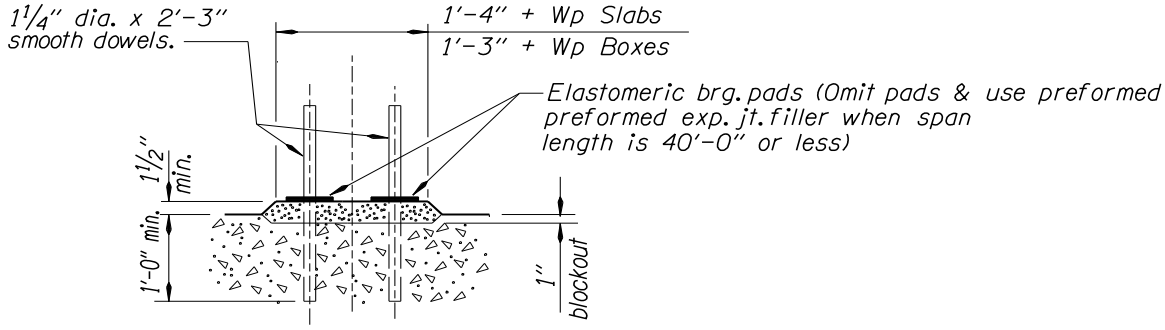

CONCRETE PAD DETAIL

See Note "A" below

(Concrete pad to be reinforced when length exceeds 70′)

NOTE "A":

Pour 2″ concrete pad. Place ½″ concrete layer a min. of 3 days after pad is poured. Place elastomeric bearing pads and prestressed slabs before ½″ concrete is fully set to insure uniform bearing across full width of slab. If uniform bearing is not achieved, lift slab and repeat procedure. Remove any excess concrete protruding above bottom of bearing pads immediately after placing slab.

Figure A1.11.2.2C

APPENDIX – SECTION 1.21 – WIRE ROPE

A1.21 CABLES AND TURNBUCKLES

CABLES

The type of cable used for general construction applications is called "Improved Plow Steel". This cable is designed to be run over pulleys and usually wears out long before it rusts out. Zinc coating is essential in applications such as seismic restraint devices where the cable is stationary and must have a long service life. Bethlehem Wire Rope (a division of Bethlehem Steel) was consulted as to what type of cable would be appropriate for these applications, and agreed with the selection of ASTM A 603 structural wire rope. The A 603 specification contains provisions for zinc coating and minimum breaking strength. For more information, Bethlehem Wire Rope can be reached at 1-800-541-7673 (EST zone).

Zinc coating comes in three classes with Class C coating having three times the weight per foot of cable than Class A coating. The cost of Class C versus Class A coating of 7/8 inch diameter wire rope is approximately $1.50 versus $1.20 per foot. Class A coating can be attained by a hot-dip method, while Class C coating requires an electroplating process. Class C coating throughout was chosen because it provides a longer service life and the increase in cost ($0.30 per foot) is relatively small. The cable is only one component in the total seismic restraint installation. The cost of the cable does not include socket connections and anchorage assemblies. The cost of the cable itself will be a small percentage of the total in-place cost of the installation. The cost estimates above were obtained from discussions with Bethlehem Wire Rope. The increase in cost for Class C coating was primarily because Bethlehem can only manufacture Class A coated wire in-house and must special order Class C coated wire.

In the construction of the 6x7 cable, there are 7 strands which each contain 7 wires. The wires in each strand are arranged with 6 wires wrapped around one center wire. The strands are arranged in a similar pattern with six strands being wrapped around one center strand. Usually, the center wire of a strand is a different size than the outer wires. Also, the wires for the center strand are usually different sizes than the wires for the outer strands. A total of four different wire sizes may be required to make the cable, with the center wire in the center strand being a unique size. By allowing this particular wire to have an optional Class A coating, the cable cost can be reduced without a significant loss in service life.

Most wire ropes are supplied with either a fiber core or a steel core. Steel cores can be either an independent wire rope core (IWRC) or a wire strand core (WSC). The wire strand core was selected because it provides greater strength than a fiber core and a larger wire size than an independent wire rope core. For 7/8 inch diameter cable, both 6x7 Class and 6x19 Class wire rope can meet the ASTM A 603 requirements.

Since a larger wire size is desirable for corrosion protection, the 6x7 class of cable was chosen. This class of wire rope has the largest wire size available. With the larger wire size, the life of the cable will be extended should the zinc coating wear off. Since the wire size for the 6x19 cable is near the limit of the A 603 specification, cable sizes smaller than 7/8” diameter will require 6x7 class to meet the minimum wire size provisions in the A 603 specification.

The 6x7 class designation for wire rope refers to a rope with 6 strands wrapped around the core. When a wire strand core is used, it is acceptable to refer this type of rope as either 6x7 class or 7x7 class (i.e., the seventh strand is the core strand).

The type of cable used by Caltrans is 3/4 inch diameter 6x19, WSC or IWRC, galvanized according to Federal Specification RR-W-410D and manufactured of improved plow steel with a minimum breaking strength of 23 tons. Bethlehem Wire Rope felt the A 603 was a more appropriate specification when galvanizing is of primary concern. In some instances, it may be appropriate to allow a contractor to substitute cable meeting the Caltrans specification (i.e., RR-W-410D) when there is a small quantity (and our stockpile is depleted) and the site is not along the coast. Wood's Logging Supply [1-206-577-8030] regularly stocks 7/8 inch diameter 6x19, IWRC, Extra Improved Plow Steel with galvanizing. This cable has

about the same breaking strength as A 603 cable, but probably has substantially less galvanizing than the Class C coating.

The anticipated stockpile site is the District 2B Maintenance facility in Clackamas. The Clackamas facility has trucks designed to lift a 12 foot barrier section with a weight of about 3 tons. A 5000 foot spool of 7/8 inch cable has a weight of approximately 3 tons. If cable is ever stockpiled at other locations, the capacity of available lifting equipment should be researched before specifying the spool size.

The bending radii given were taken from a chart showing proper sheave and drum sizes in the Bethlehem Wire Rope General Purpose Catalog. It is not clear whether or not these values are appropriate for the seismic retrofit application. The values are given only for lack of better information. The 4 inch bending radius for the Caltrans ¾ inch diameter cable is what CH2M proposed for the West Marquam seismic retrofit project.

TURNBUCKLES

Federal Specification FF-T-791B classifies turnbuckles by type, form, and class. Type I turnbuckles have an open turnbuckle body. Type II and type III turnbuckles have a closed (i.e, pipe) turnbuckle body. Type I should be specified so that the interior of the turnbuckle can be inspected. The form refers to the construction of the turnbuckle body. Any form is acceptable as long as the turnbuckle can develop the strength of the connecting cable. The capacities listed in Table 1 of FF-T-791B are minimum values. Manufacturers are able to make turnbuckles to higher strengths than listed in Table 1. The Designer should specify the load needed and not the size of the turnbuckle. However, the Designer should use the size determined by the stated capacities in Table 1 of FF-T-791B for checking clearance requirements. Turnbuckles are also distinguished by a class designation. The class designates the type of connection at each end of the turnbuckle. The Designer should specify the type of end by a description rather than by class. The type of ends used for seismic retrofit applications will be limited to "jaw" (also referred to as a clevis) and "eye" ends only.

Either a jam nut or lock wire should be provided at each end. Jam nuts are not allowed by the Ontario Safety Code or State Industrial Accident (Workers' Compensation Department). For most turnbuckle applications, the turnbuckle is tightened and untightened repeatedly. For seismic retrofit applications, however, the turnbuckle will require only limited future readjustment. Therefore, jam nuts will be allowed for seismic applications. Caltrans allows the use of closed (i.e., pipe) turnbuckle bodies. This type of turnbuckle cannot use lock wires. Workers' Compensation has requested (in 1984) we use lock wires for the safety cable application. No information has been found which specifies the size of lock wire required. 14 gage wire has an 0.080 inch diameter.

The take-up length for the turnbuckle allows the cable system to be field adjusted. Federal Specification FF-T-791B lists the take-up lengths commonly available for each size of turnbuckle. The Designer should consider what minimum take-up is appropriate. Long take-up lengths will make the cable system easy to adjust in the field and will minimize the number of different cable lengths required. A 24 inch take-up length is recommended for most applications.

Cable socket connections are classified as swage, wedge, or spelter. The choice of which type of socket connection to use should be left to the Contractor. Both the swage and spelter connections are able to achieve the breaking strength of the cable. Wedge connections, however, should not be allowed since they can normally achieve only 80 percent of the cable breaking strength. Socket connections are generally referred to as either "open" or "closed". Open (or clevis) socket connections have a "jaw" end. Closed socket connections have an "eye" end. It is also possible to have a stud (threaded bolt) connection. The stud (threaded bolt) may connect directly to one end of a turnbuckle.

Two catalogs are available in the Bridge Engineering Headquarters which contains information on turnbuckles and clevises. "Crosby" has information on turnbuckles, socket connections (open and closed), and wire rope thimbles. This information includes dimensions, weights, and strengths. "Electroline" has information for clevis socket assemblies, stud assemblies, and turnbuckles. Electroline's information has only dimensions.