I N T E R O F F I C E M E M O

TECHNICAL SERVICES
Bridge Engineering Section
Office Phone: (503) 986-4200
Fax Number: (503) 986-3407

DATE: July 7, 2016

TO: Alex Lim
Bridge Design Standards Engineer

FROM: Alex Lim
Bridge Design Standards Engineer
ODOT
Phone: 503-986-3402

SUBJECT: Proposed Revision to Bridge Design & Drafting Manual

RE: BDDM Section 1.13 –Rails, Impact Attenuators, and Protective Screening

Problem Statement:

- Update section for consistency and clarify such as Description in Table 1.13.1.3A.
- Delete sentence in BDDM 1.13.1.9 about Lc value at scoring joint to avoid confusion.
- Update link and guidance for BDDM 1.13.2 Bridge Rail Replacement & Retrofit Guidelines.
- Rearrange protective screening section to clarify design guidance.
- Update hyperlink to various reports throughout section.

Proposal:

Modify Sections 1.13.1, 1.13.2, 1.13.3 and 1.13.4 as follows:

1.13 RAILS, IMPACT ATTENUATORS, AND PROTECTIVE SCREENING

1.13.1 Bridge Rail

1.13.2 Bridge Rail Replacement & Retrofit Guidelines

1.13.3 Impact Attenuators or Crash Cushions

1.13.4 Protective Screening or Protective Fencing

1.13.1 Bridge Rail

1.13.1.1 Design Standards

For new and widening projects, use *Section 13* of the current *AASHTO LRFD Bridge Design Specifications* for guidance to determine the required bridge rail. Rails on state owned bridges require a minimum crash test rating of TL-4. Also, the structure designer works with the project team to select the best rail for a given site, considering roadway geometry, traffic volume, speed, truck traffic, accident history, sight distance, occupant risk, aesthetics, maintenance, inspection and related factors.

FHWA approved rails used by other agencies (DOTs, municipalities, etc.) can be used. Using them requires a design deviation unless they are listed in *BDDM Figure 1.13.1.3B*. Submit design deviation according to *BDDM 1.2.2* and supported with the following information:

- Appropriate crash test rating
- Crash test data documentation and conclusions that the rail performed acceptably
- FHWA approval for use (listed on FHWA website or approval letter from owner agency)
- Design calculations showing compliance with *LRFD Chapter 13* criteria

Submit requests for frequently used rails to be added to the list in *BDDM ~~Figure~~ Table 1.13.1.3B* to ODOT's Bridge Rail specialist.

1.13.1.2 Crash Test Policy

Since 1989 there has been Federally required crash testing of bridge rails. And in August of 1998, the FHWA required all new or replacement rails used on Federally funded NHS-route projects to meet the NHRCP Report 350 Test Level 3 (TL-3) requirements or higher. ODOT requires minimum TL-4 on state routes. Crash-testing confirms the rail is structurally adequate and the vehicle trajectory after collision is acceptable.

A May 30, 1997 FHWA memo identifies 68 crash-tested bridge rails. It also assigns equivalency ratings that relate previous crash testing to current standards of NCHRP Report 350 test levels. Several ODOT Standard Rails are identified on the list. This memo, FHWA approval letters and crash test reports for ODOT standard rails can be found on the Bridge Standards website~~.~~ and the links provided in *BDDM 1.13.1.3.* Also, FHWA's Bridge Rail website has a complete list of current crash tested approved rails, associated drawings, supporting crash test reports and acceptance letters.

When NHCRP Report 350 crash testing requirements are not met, a Design Exception is required for use of the bridge rail. Refer to ODOT's Highway Design Manual for the Design Exception request process. Design deviation is not needed when a Design Exception is submitted for the project, however, provide the supplement information required for a design deviation with the Design Exception submittal.

In 2000 the FHWA allowed new rails to be proposed for FHWA approval, based on similarity to an existing crash tested rail. Detail drawings, calculations and a narrative explanation are submitted to FHWA via ODOT. These submittals are typically forwarded out of state to FHWA rail specialists for review and possible analytic modeling. Changes may be suggested, or the design may be approved with minimal revision. Allow ample time for the review process to assure that design approval will be granted without delaying the project schedule. Contact the Bridge Rail Specialist for more information on this process. Until the rail is approved, a Design Exception is required.

Minor changes may be made to ODOT Standard rails in order to meet a specific need. Changes must maintain the rail's crash worthiness and require a design deviation, submitted according to *BDDM 1.2.2*.

Occasionally ODOT accepts rails that have not been crash-tested on a case-by-case basis. Generally the following conditions are present when they are considered:

- Must not be on federal-aid projects
- Design speeds are 35 mph or less
- Rail is mounted on back of a raised sidewalk (5 foot minimum width) with a barrier curb (8 inch minimum height)
- Rail is structurally adequate based on loading conditions of *LRFD Section 13*.

1.13.1.3 Vehicular Railing

The following are the current ODOT bridge rail standards:

Drawing No.	Description	Crash Tested	Performance Level / Test Level	App. FA Proj.
BR200	Concrete Bridge Rail, Type "F"~~F~~	Yes	PL-2 (TL-4)	Yes
BR203	Transition ~~to~~ Conc~~. Br. Rail Type F~~rete Bridge Rail to	Yes(1)	TL-4	Yes
BR206	~~Two~~2-Tube Curb Mount Rail (2)	Yes	PL-2 (TL-4)	Yes
BR207	~~Transition to Two- Tube Rail~~2-Tube Curb Mount Rail	Yes(1)	TL-4	Yes
BR208	~~Three~~3-Tube Curb Mount Rail (2)	Yes	PL-2 (TL-4)	Yes
BR209	~~Transition to Three-Tube Rail~~3-Tube Curb Mount Rail	Yes(1)	TL-4	Yes
BR212	Concrete Post and Beam Bridge Rail	Yes	TL-4	Yes
BR214	Concrete Parapet with Steel Post	Yes	TL-4	Yes
BR216	Sidewalk Mounted Combination Bridge Rail	Yes	PL-2 (TL-4)	Yes
BR220	Flush Mounted Combination Bridge Rail	Yes	PL-2 (TL-4)	Yes
BR221	32" Vertical Concrete Parapet	Yes	PL-2 (TL-4)	Yes
BR223	Combination Bridge Rail Details	NA	NA	Yes
BR226	~~Two~~2-Tube Side Mount Rail (2)	Yes	PL-2 (TL-4)	Yes
BR230	~~Two~~2-Tube Side Mount Rail Transition	Yes(1)	TL-4	Yes
BR233	Thrie Beam Rail and Transition (2)	Yes	PL-1 (TL-2)	Yes
BR236	Trailing End Bridge Connection Concrete	Yes	TL-3	Yes
BR263	Conc. Median Barrier at Br. Exp. Joints (Type	No	PL-2 (TL-4)	Yes
BR266	Modified Type 2A ~~Guardr~~Rail	Yes	PL-1 (TL-2)	Yes
BR240, 241, 242, 245	Protective Fencing	NA	NA	Yes
BR246	Pedestrian Rail	NA	NA	Yes
BR250	Pedestrian Rail on Sidewalk Mounted Conc~~rete~~.	No (3)	(PL-1)	(3)
BR253	S~~i~~d~~e~~w~~a~~lk. Mounted Conc~~rete~~. Parapet w/Chain Link	No (3)	(PL-1)	(3)
BR256	Pedestrian Rail on Type "F"~~F~~ Concrete Bridge Rail	Yes(1)	PL-2 (TL-4)	Yes
BR260	Chain Link Fencing on Type "F"~~F~~ Concrete Bridge	Yes(1)	PL-2 (TL-4)	Yes
BR270~~-BR286~~, 273,	See BDDM 1.13.1.2 for Retrofit Details			
BR290	~~Concrete Bridge Rail,~~ 3'-6" Type ~~F~~ "F" Concrete	Yes	PL-3 (TL-5)	Yes
BR291	Transition ~~42~~3'-6" Conc. Bridge Rail to Guard ~~R~~rail	Yes(1)	TL-4	Yes

~~Figure~~ Table 1.13.1.3A

Footnotes for Standard Rail *Table 1.13.1.3A*:

(1) Similar to a rail or transition that has been tested.

(2) These rails can easily be used with precast slabs.

(3) These combination rails are different than what was crash-tested. A 24 inch vertical concrete parapet with a single horizontal steel rail on top was successfully crash-tested at the back of a curbed sidewalk. Although these combination rails are different, it is believed they will perform adequately. They may be used when the design speed is 35 mph or less. For design speeds greater than 35 mph, FHWA approval is on a case-by-case basis.

The following are non-ODOT bridge rails acceptable for use on ODOT projects:
A design deviation is not necessary for use of these rails.

Drawing No.	Description	Crash Tested	Performance Level / Test Level	App. F.A. Proj.
None	Texas 411 Aesthetic Concrete Baluster	Yes	PL-1 (TL-2)	No
None	Texas C411 42" Concrete Baluster	Yes	PL-1 (TL-2)	No
None	B11-57 California Concrete Barrier Type 742	Yes	(TL-4)	Yes

~~Figure~~ Table 1.13.1.3B

- General – Consider maintenance and inspection needs when selecting a bridge rail. Personnel working near a rail shorter than 39 inches are required to tie off for fall protection. Standard *BR200* Type "F" rail has transverse holes for this purpose. A 42 inch high rail requires no tie off provisions.

  When architectural treatments are used, the minimum concrete cover requirements must be maintained. Cover can be increased to accommodate formliner patterns.

  Orient bridge rail and posts normal to grade in the longitudinal direction and vertical in the transverse direction for ease of construction and aesthetics. When deck superelevations exceed 8%, consideration can be given to orienting posts normal to grade in both directions to be more aesthetically pleasing. Apply any modifications to all rail components so they are all oriented the same (i.e. concrete parapet and attachments).

- Joints in Rails – See *BDDM 1.13.1.9*.

- Standard Concrete Type "F" Bridge Rail (*BR200*) - The Standard Type "F" rail is generally the best performing rail. It is generally used where there is high-speed, high-volume traffic, where the structure is on a curve and generally on all interstate and State highways. It is also the preferred rail to be used between a sidewalk and traffic when the design speed is greater than 40 mph. Check interference with sight distance from interchange ramps or crossroads. Avoid concrete rail in areas where drifting snow might create a problem. Tubular railing may be preferred in scenic areas where concrete rail would otherwise be indicated. Crash testing to qualify this rail to the PL-2 level was completed in 1997 per FHWA-RD-93-058. It was assigned TL-4 equivalency in FHWA Memo dated May 30, 1997.

- Two and Three Tube Curb Mounted Rails (*BR206 and BR208*) – These rails can be used instead of the Type "F" rail when "see-through" is desired. The anchorage details can be modified to accommodate pre-cast slab and box voids, see ~~*DET3204 and*~~ *DET3205*. However use of *BR226* or *BR233* is preferred in these cases. Even though these rails are acceptable in most applications, a Type "F" rail is recommended on high speed and limited access highways. The Type "F" rail is better at redirecting errant vehicles and requires less maintenance. In cooperation with Alaska DOT, crash testing to qualify these rails to the TL-4 level was completed in 1998 for the Two-Tube and in 2001 for the Three-Tube rail.

  Prior to1998 Oregon Two-tube curb mount rails are listed as TL-2 in the May 1997 FHWA Memo "Equivalent Test Levels for Crash Tested Bridge Railings". This includes standard drawings *43497* and early metric *BR206*, which have tubes with 3/16 inch wall thickness. In a TL-2 environment, existing rails from these standard drawings could remain in place without a design exception (they may need maintenance such as re-galvanizing, etc.).

- 3'-6" Type "F" Rail (*BR290*) - ODOT standard rail *BR290* meets PL-3 (TL-5) crash test requirements. Consider TL-5 rated rails for use on medians, curves and roads with heavy truck traffic when there is concern for cross over collisions, truck rollovers and roadway departures. However, geometric improvements to improve safety conditions are preferred rather than relying on a traffic barrier to reduce the severity of a crash. Refer to the *AASHTO Roadside Design Guide*, Section 5.3 and the 2010 FHWA memo for additional guidance.

- 42" Single-Slope Concrete Barrier – California and Texas have developed single slope barrier that perform comparably to the Type "F" rail. Both have a TL-4 rating but California's detail is preferred as it has better post-crash trajectories, refer to *BDDM ~~Figure~~ Table 1.13.1.3B*. They can be used on selected Federal-aid projects as directed by the Regions. It is acceptable as either a median or shoulder barrier. If a project has this type of shoulder barrier on the roadway, consider using a single slope matching rail on the structure. Using a 42 inch Type "F" rail is preferred instead of the single slope barrier.

- Aesthetic Concrete Baluster - This is a decorative rail developed by Texas. It was crash-tested to the TL-4 level and failed. It has a TL-2 rating and can only be used on a case-by-case basis where design speeds are less than 45 mph. This typically applies to Local Agency or State bridges not on NHS routes. The TL-2 rating does not meet the minimum TL-3 requirement for NHS routes. The design engineer will have to generate and stamp the rail drawing.

- Standard Thrie Beam Rail (*BR233*) - The last steel post may need to be side mounted on to a thickened section of the end panel to accommodate the 3'-1-1/2" space between the last steel rail post and the first timber post in the transition. If end panels are not used, the end bent or wingwalls may need to be extended or adjusted to accommodate the last side-mounted steel post. A scaled-down version of the side-mounted rail was successfully crash-tested~~.~~ to the TL-2 level. ODOT's rail has FHWA approval because it was shown analytically to react as the crash tested version.

- Modified Type 2A Rail (*BR266*) - This guardrail is intended for mounting on a concrete slab on top of RCBC when the fill height is less than the standard post embedment and when spanning the box is not possible (see *BDDM Figure 1.13.1.8*).

- Timber Rail - Timber is generally not used for longitudinal members for either temporary or permanent railing. When a timber rail is desired for architectural reasons (as in a park), a steel-backed timber rail may be acceptable. A glued laminated timber rail has been successfully crash-tested for PL-1 (TL-2) criteria.

- Aesthetic Rails designed by another agency – For certain projects, aesthetic bridge rails are desired which are not found in the list of ODOT standard rails. A list of alternate approved rails is shown in *BDDM ~~Figure~~ Table 1.13.1.3B*. Other alternate rails may be proposed and used with an approved design deviation.

1.13.1.4 Loads

LRFD rail design capacities have been calculated and are on the ODOT Bridge Engineering website ~~ODOT FTP site~~ for use when designing deck overhangs.

When the factor "C" is required for rail post design in the AASHTO Standard Specifications for Highway Bridges, use it when designing the adjacent deck reinforcement and the connection of the post to the deck.

1.13.1.5 Bicycle and Pedestrian Railing

Use bicycle and pedestrian railing on the outside of structures that are specifically designed to carry bicycle and/or pedestrian traffic. Separate bicycle and pedestrian traffic from vehicular traffic by a vehicle rail when design speeds exceed 40 mph.

AASHTO and the *Oregon Bicycle and Pedestrian Plan* require a minimum height of 42 inch for either bicycle or pedestrian railings. The Standard Protective Fenc~~e~~ing (*BR240*) and Standard Pedestrian Rail (*BR246*) meet this requirement. At locations with high bicyclist traffic, rail height can be increased up to 54 inches.

Use curbs (preferably 6 inch, max. 8 inch) above the level of the sidewalk under all pedestrian railings where there will be significant pedestrian, vehicular or boat traffic under the structure. Use 8 inch curbs only where design speeds are 45 mph or less. Do not use a curb unless the bridge rail was crash tested with a curb. Runoff from sidewalks does not need to be carried off of a structure, see *BDDM 1.24.5* for additional guidance.

1.13.1.6 Combination Rails

Combination rails are rails that provide protection to both vehicles and bicycles or vehicles and pedestrians. When design speeds exceed 40 mph, provide a vehicle rail at the traffic face of the sidewalk.

Neither AASHTO nor FHWA have clear specifications concerning acceptance criteria for combination rails. The following recommendations should provide reasonable safe protection:

- Crash-test combination rail to the performance level requirements of the site. Exceptions to crash testing may be allowed in certain situations as stated in *BDDM 1.13.1.2*.

- Combination rails must not have any opening such that a 6 inch sphere can pass through any opening to a height of 27 inches. Above 27 inches, an 8 inch sphere must not pass through. See *LRFD 13.8.1*.

- Combination rails on the back of sidewalks for pedestrians or bicycles must be at least 42 inches high. Determine these rails on a case-by-case basis depending on bicycle/pedestrian use.

- Combination rails must be at least 42 inches high (and in some cases 54 inches) where bicycles share the shoulder. Determine these rails on a case-by-case basis depending on site location and bicycle use.

Available combination sidewalk/traffic rail:

- Standard Drawings *BR250* and *BR253* - These provide a 32 inch high vertical face concrete parapet with pedestrian rail or chain link fence on top at the back of a raised sidewalk (54 and 56 inch rail heights). A similar configuration was crash-tested, and although it is believed they will perform adequately, use them only on a case-by-case basis in locations behind a raised sidewalk at least 5 feet wide where the design speed is 35 mph or less. For design speeds greater than 35 mph, FHWA approval is on a case-by-case basis.

- Standard Drawings *BR216* – These provide a single tube or two-tube mounted on a 31 inch vertical parapet (42.5 and 54 inch rail height respectively). The single tube rail has been crash tested to PL-2 (TL-4) requirements. It is believed the two-tube rail will perform adequately and further testing (with the additional top rail) is not warranted.

Available combination bicycle/traffic rail:

- Standard Drawings *BR256* and *BR260* - These are Type "F" concrete rail with pedestrian rail or chain link fence on top (54 and 56 inch rail heights). The Type “F” concrete rail has been crash tested to PL-2 (TL-4) requirements. Our judgment is that further testing (with the additions on top) is not warranted. These combination rails were developed to be used next to a bike lane/shoulder combination.

- Standard Drawing *BR240*- This combines a Type "F" concrete rail, and a two-tube rail with a protective fence mounted behind it (see *BR240* details Type ‘C’ and Type ‘D’, respectively. The Type “F” concrete rail has been crash tested to PL-2 (TL-4) requirements. The two-tube rail has been tested at the TL-4 level. Our judgment is that further testing (with the protective fence additions) is not warranted.

- Standard Drawings *BR220* – Single-tube or two-tube rail mounted on a 31 inch vertical parapet (42.5 or 54 inch rail height respectively). The single-tube rail has been crash-tested to PL-2 (TL-4) requirements. Our judgment is that further testing (with the additional rail on top) is not warranted.

1.13.1.7 Rail Transitions

Rail transitions are required on rail installations to provide a controlled variation in stiffness from the approach guard rail to the more rigid bridge rail. *BDDM 1.13.2.2(b)* provides guidance on treatment of rail transitions on existing bridges.

The current transitions are crash tested and have very close post spacing. Problems have arisen when the first post off the structure conflicts with the bridge end. In some cases the first post was omitted, which is not acceptable. This has happened when the installation was left totally to the contractor, without advance guidance from the Engineer.

Consider any post conflicts and detail a solution in the contract plans. Possible remedies include:

- Remove concrete to allow room for the normal post to fit.
- Add a concrete pad (with anchor bolts) to the existing concrete, and add a base plate to the first post. This will require drilling into the existing rail or curb to install dowel bars for anchorage.
- Mount a structural steel spacer block to a vertical face of a rail end block, in place of a post.

1.13.1.8 Rails Over Low Fill Culverts

Standard Drawing *BR266*, Modified Type 2A ~~Guardr~~Rail, is for use when the fill height above a box culvert or rigid frame is less than the standard embedment of timber guardrail posts. This design is the same as the system which was successfully crash-tested to PL-2 (TL-4) ~~a~~ and was reported in the Transportation Research Record 1198. During the test, the steel posts yielded about 32 inches, which is similar to ODOT's timber post system. Using this method eliminates the need for transitions, which are required because the steel post bridge rail is normally a rigid connection. The crash test report claims this system is acceptable for fill heights from 0 to 3 feet.

For culverts under 18 feet, one or two posts can now be eliminated from a normal W-beam guardrail installation (post spacing at 6'-3") by using two nested W-beam elements (see *BDDM Figure 1.13.1.8* below). This design has been successfully crash-tested and can now be used on Federal-aid projects.

Figure 1.13.1.8 - Detail A, shown below, is an acceptable method for continuing guardrail over areas where a 12'-6" guardrail span, that contains no posts, is necessary. *Figure 1.13.1.8 - Detail B*, shown below, is an acceptable method for continuing guardrail over areas where an 18'-9" guardrail span, that contains no posts, is necessary. See *RD470*.

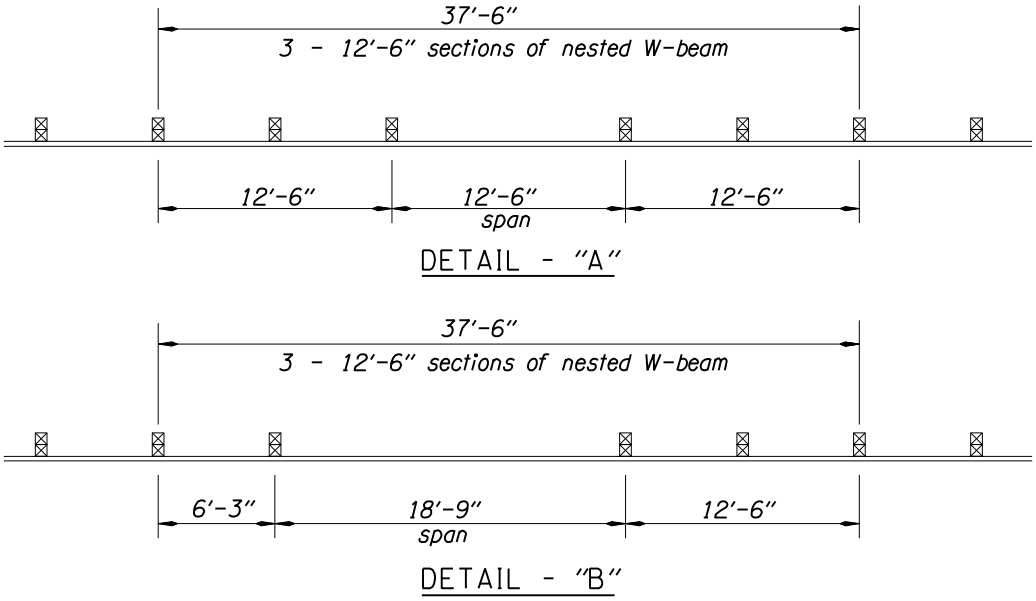

Figure 1.13.1.8

1.13.1.9 Joints in Bridge Rail

Concrete bridge rails are usually constructed vertical, or plumb, and not normal or perpendicular to the deck. Joints and architectural treatments should also be constructed or placed plumb.

Type 'B' Joints (at Interior Bents with Continuous Deck) – The ¼ inch preformed expansion joint filler through the rail forms a joint which is provided to reduce shrinkage cracks in the rail and reduce the tendency of the rail to act compositely with the superstructure.

Scoring Joints – Place at 15 foot maximum centers, equally spaced between Type 'B' joints and expansion joints. For typical ODOT standard concrete rails, space joints in the range of 10 to 15 feet. The joint spacing must equal or exceed the critical length "Lc" of the yield line failure pattern (see *LRFD A13.3.1*) for ~~a vehicle impact within the panel~~impacts within a wall segment~~. Note that each panel will~~

~~have two "Lc" values: one for impacts within the panel~~ (typically in the range of about 8.5 to 12.5 feet). ~~and one for impact at the end of the rail segment (generally in the range of 4 to 5 feet).~~ Show the location of each joint on the deck plan, but they need not be dimensioned. The bottom two longitudinal bars are continuous through scoring joints but terminate 2 inches before all other joint types.

At Bridge Deck Expansion Joints – Provide rail joints at every structure joint to prevent cracking or spalling of the rail or structure. Show rail details at expansion joints on the standard drawings. Skew rail joints to match the deck joint for skew angles up to 20 degrees. For skew angles in excess of 20 degrees, orient the rail joint normal to the rail. See *BR139* for details.

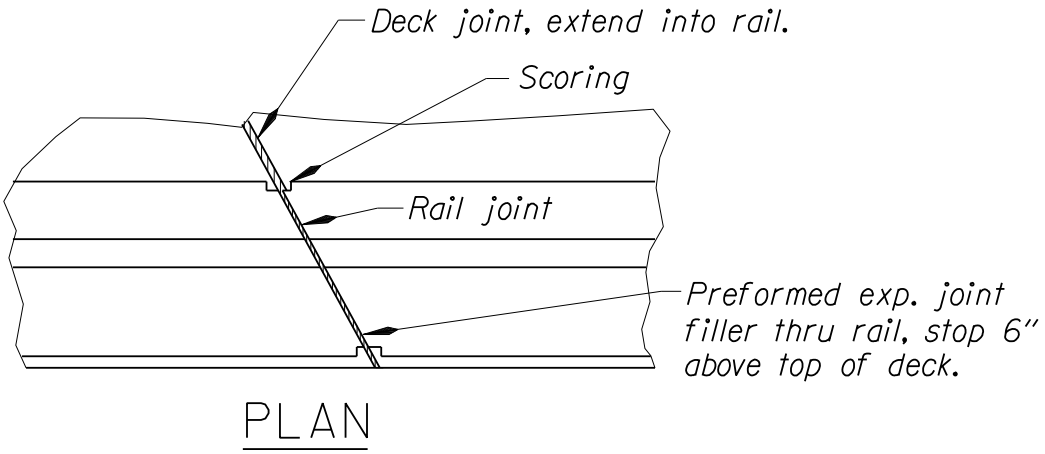

Figure 1.13.1.9A

Do not leave rail joints as open joints, including joints between the bridge end and the bridge end panel, because of the potential problem of water passing through the joint and eroding the embankment. Use the same joint material in the rail or curb as used in the roadway. If an asphaltic plug joint is used, a non-sag poured joint seal or compression joint seal could be used in the rail or curb.

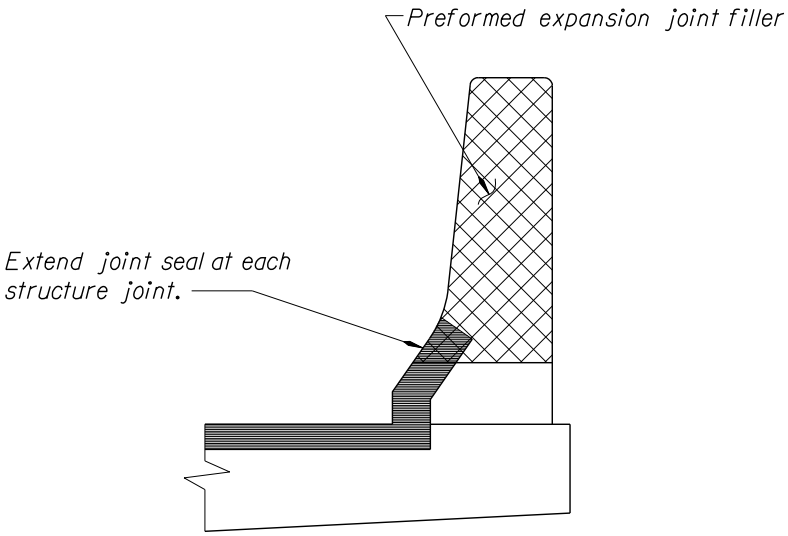

Figure 1.13.1.9B

1.13.1.10 Temporary Barriers

FHWA requires that temporary bridge rails meet TL-3 performance criteria using successfully crash tested systems. Ordinarily temporary bridge rail is constructed from pin and loop median barrier secured against sliding and overturning as shown in Standard Details *DET3295* and *DET3296*. Restraints will not be required if the barrier can be displaced 3 feet or more away from the traffic side(s) without infringing on a traffic lane, a work area, or beyond the edge of the deck. Check with the Traffic Control Plans designer to determine if reflectorized barrier should be noted on the detail plans.

The ODOT anchored barrier is adapted from barrier used in a Lincoln, Nebraska crash test, documented in report TRP-03-134-03 dated August 22, 2003. The goal was to model and develop a barrier having shallower anchors than were used in the crash test, so they could be bonded into typical bridge decks. First, models were run of the crash test barrier to build confidence in the analysis relative to the known testing results. New models were run having 4 or more anchors. In addition to the barrier's own anchors, the system relies on the pin and loop connections to transfer load resistance from adjacent barrier segments. To determine maximum anchor loading, one cannot simply divide the total applied load by the number of anchors. Due to barrier deflection, anchors nearest the loading zone will receive a much higher fraction of the load than those further away. A 3-D finite element model is needed to get a realistic estimate of anchor loads. Support spring constants can be calculated from axial and bending deflections of the exposed anchors themselves, which will aid in distributing reactions to other anchors thus reducing peak loads. Provisions of *BDDM 1.20.2.2* were used to estimate resistance of resin bonded anchors for LRFD loads.

Anchor Bolts, Nuts and Washers: Resin bonded anchor bolts with fully threaded rods in accordance with ASTM F1554 Grade 36. Use anchor bolts for through bolting in accordance with ASTM A307 or ASTM F1554 Grade 36. Use nuts in accordance with ASTM A563 or ASTM A194. Use flat washers in accordance with ASTM F436 and plate washers shall be in accordance with ASTM A36 or ASTM A709 Grade 36.

Install four (4) anchor bolts per barrier on the traffic side as shown in Standard Details *DET3295* and *DET3296*. Do not drill into or otherwise damage the tops of supporting beams or girders, bridge deck expansion joints or drains. Install anchor bolts and nuts so that the maximum extension beyond the face of the barrier units is ½ inch. Snug tighten the nuts on the anchor bolts. For through bolted installations, snug tighten the double nuts on the underside of the deck against each other to minimize the potential for loosening.

Omit one (1) anchor bolt within a single barrier unit if a conflict exists between the anchor bolt location and a bridge deck expansion joint or drain. The adjacent barrier units must each be installed with the standard four (4) anchor bolts.

Removal of Anchor Bolts: Upon removal or relocation of barrier units, remove all anchor bolts and completely fill the remaining holes in bridge decks and approach slabs with an approved patching material from the QPL. If ACWS overlay is present and is to remain, completely fill the remaining holes with hot or cold patch asphalt material.

Other Rail Options: At least one crash tested proprietary steel safety shape rail system exists, which could be a contractor option for temporary rail use. Example: see FHWA Acceptance Letter B-165.

1.13.2 Bridge Rail Replacement & Retrofit Guidelines

1.13.2.1 Design Standards

ODOT promotes highway planning that replaces or upgrades railing on existing bridges to current standards, minimum TL-4. Although AASHTO has not set acceptance criteria for retrofitting existing substandard rails it is recommended that *LRFD Section 13* criteria be used as a starting point. Consult the Bridge Preservation Unit for treatment of historic stealth rails as they are often unique and are candidates for Design Exceptions.

When required (per *BDDM 1.13.2.2*) to retrofit or replace rails on 4R, 3R and preventative maintenance projects on State Highways or NHS roads, provide bridge rails conforming to *BDDM 1.13.1.1*.

When required *(per BDDM 1.13.2.2)* to retrofit or replace rails on 4R, 3R and preventative maintenance projects on Local Agency roads, provide bridge rails conforming to the current *LRFD* standards.

1.13.2.2(a) Treatment of Existing Bridge Rails

The following are minimum requirements for treatment of existing rails for various circumstances on state owned bridges. It is always acceptable to exceed these requirements.

Bridge rails on state owned bridges not upgraded under the following criteria are deferred to the Bridge Rail ~~Safety Features Upgrade~~Prioritization and Retrofit Program (~~BRSFUP~~BRPRP). The BR~~SFU~~PRP was developed to address bridge rail deficiencies in a more strategic way and to focus funds on rails most in need of replacement or retrofit by deferring work on rails within the limits of a project where a significant safety hazard does not exist. The safety warrants contained in *BDDM 1.13.2.2(b)* provide a framework for identifying bridges where a significant safety hazard does not exist and it is appropriate to defer rail work.

a. Prevent~~at~~ive maintenance work does not require a design exception to defer rail replacement or retrofit work when the requirements of *BDDM 1.13.2.2(b)* are met.

b. 3R projects (restoration and rehabilitation) that do not affect the bridge rail and involve no structural work do not require a design exception to defer rail replacement or retrofit work when the requirements of *BDDM 1.13.2.2(b)* are met.

c. 3R projects (widening and rehabilitation) that affect the bridge rail, involve structural superstructure work, widen the structure, or re-decks (full-depth) any complete span require compliance with MASH or NCHRP 350 crash test requirements.

d. For retrofit and replacement on 1R, Roadway funded projects, upgrade rails in accordance with *HDM 1.3.2.5*.

1.13.2.2(b) Safety Warrants

a. On 3R projects upgrade transitions, approach rail and end treatments to current standards. On preventative maintenance projects upgrade transitions when the following blatant safety hazards exist:
   - Approach rail is not attached to the bridge rail
   - Rail ends are blunt and unprotected

   When no other work is done that affects the bridge rail, rail transitions, approach rail and end treatments may be upgraded without upgrading the bridge rail. Request a Design Exception to leave non-standard guardrail in place.

b. Regardless of project classification, upgrade the rail when any one of the following safety

warrants exists:

- Rail is on the ~~BRSFUP Priority ListBRSFUP Priority ListBRSFUP Priority ListBRSFU~~PRP Priority List. In summary we are targeting bridge rails that area made of aluminum and those that have more than 11 points in the prioritization algorithm. These rails will be retrofitting in separate projects that include bridges with high priority rails along a given highway segment.
- Three or more accidents or a fatality has occurred in the past five years at the bridge site
- The rail is in a condition state four
- The bridge is located on an Interstate or high-speed, high-volume facility (for this purpose high volume is considered AADT of 30,000 or higher~~)~~ and has shoulder widths of less than 3 feet)
- The rail height is less than 27 inches. Existing rails may be raised to meet height requirements, provided the existing strength capacities are not reduced by the revised configuration.

c. Regardless of project classification, upgrade the rail when a Safety Assessment by the Region Traffic Engineer recommends an upgrade.

- Consult the Region Traffic Engineer for concurrence when a rail upgrade is being postponed or deferred for preventative maintenance and 3R work. The Region Traffic Engineer will perform a Safety Assessment to analyze existing safety hazards to determine if the appropriate solution is being implemented. See RD13-02(B) for additional information on Safety Assessments. Document their concurrence in the TS&L Report.

1.13.2.2(c) Mitigation

Occasionally it may be difficult to upgrade an existing deficient rail with a cost effective crash tested rail. In this case, a "special" retrofit design may be necessary and a Design Exception is required. The "special" retrofit design should try to emulate one (have similar geometric and strength features) as a crash tested rail. Use standard transitions for non-standard retrofits.

1.13.2.2(d) Design Exceptions

Justify design elements not meeting *BDDM* or *LRFD* standards and document them with a design exception as specified in Chapter 1~~3~~4 of the *ODOT HDM* – Design Exception Process. Some installations may require a Design Exception, such as:

- When the deck cannot support the added load
- When work is being postponed because the bridge is scheduled for widening or replacement in the current STIP
- For other reasons in the public interest.

1.13.2.3 Identifying Deficiencies of Existing Bridge Rails

The most appropriate retrofit option is based on the type of deficiencies present. Upgrading structurally deficient rails requires strengthening the existing rail. Upgrading functionally obsolete rails requires eliminating undesirable geometric features.

a. The bridge rail must be strong enough to prevent penetration. Most rails properly designed after 1964 are strong enough to contain an impacting vehicle while those designed prior to 1964 are typically structurally inadequate. All aluminum tube rails are structurally inadequate.

- Apply current *LRFD* standards first to check structural adequacy of the rail and deck.
- For bridge rail projects designed under the *AASHTO Standard Specifications for Highway Bridges*, 17th Edition or earlier, apply the 10 kip horizontal load as a minimum when checking structural adequacy of the rail and existing deck in accordance with 17th edition *Article 2.7.1.3 and 3.24.5.2*.
- When capacity is not achieved either in the rail or deck, strengthening measures or exceptions may be made based on project type, in particular when the bridge is historic. A Design Exception may be necessary.

b. The bridge rail must safely redirect errant vehicles. Geometric features of rails that may produce high deceleration forces or cause a vehicle to roll over after impact are termed functionally obsolete. Although best determined by a crash test, there are four geometric features that can be used to identify an existing rail as acceptable or functionally obsolete without crash testing:

- Height of Rail. The bridge rail must be high enough not only to prevent the vehicle from vaulting over, but also to prevent the vehicle from rolling over after impact. An existing rail must meet the minimum rail height specified in *LRFD Table A13.2.1* to be adequate. Rail height is measured from the riding surface, or top of sidewalk when present. Up to a 2 inch height reduction due to overlays is accounted for in the original design on certain rails. Thus existing rails 1 to 2 inches shorter than the required height due to overlays may not need to be rehabilitated.
-

- Presence and Location of Curbs. A curb or sidewalk between the travel lane and the bridge rail may cause an impacting vehicle to launch over the rail or strike it from an unstable position. Rails with curb heights of 6 inches or more and widths of 9 inches or more where speeds are greater than 45 mph are typically deficient.

- Vertical Openings and Post Setback. Rails with large openings or exposed posts may cause snagging. Generally extensions or recessions beyond 2 inches are considered potential snag points. Refer to *LRFD A13.1.1* for guidance to determine if a tube rail is deficient based on opening height and post set back. Nearly all stealth rails ore deficient in this regard and will require a Design Exception. The following are examples of deficient rails due to snagging potential from large openings in the rail or exposed posts:

  - concrete parapet with large openings (e.g. *Dwg 3411*)
  - timber rail with concrete posts (e.g. *Dwg 4412 & 4441*)
  - steel rail with concrete posts (e.g. *Dwg 7044*)

- Rail Continuity. Rails made up of separate unconnected elements may cause a vehicle to be redirected uncontrollably. Rails that are not connected to concrete end posts have weak spots at the discontinuity that may cause snagging. Discontinuities resulting in more than 2 inches of deflection are considered a serious snagging concern.

c. The bridge must have an adequate approach rail to bridge rail transition. Like bridge rails, transitions are crash tested to confirm they are structurally and functionally acceptable. To reduce the likelihood of a vehicle snagging, pocketing, or penetrating the transition ensure the following features are present:

- a firm connection to the bridge rail
- a gradual stiffening of the rail/post system as it approaches the bridge rail
- a block between the rail element and the post.

In low speed locations (45 mph or less) where approach rail is not used, slope the bridge rail end down or shield it using a crash cushion. See *HDM 4.6.6* for additional guidance.

1.13.2.4 Designer's Checklist

The following is a check list of things to consider for rail retrofit projects:

a. Determine the project classification (e.g. preventative maintenance, 3R, 3R with bridge rail work, etc.)

b. Determine the Performance Level requirements

c. Determine deficiencies of the existing rail and evaluate the most appropriate replacement and retrofit options.

d. Examine the safety warrants described in *BDDM 1.13.2.2(b)*

e. Check Structural Capacity of the Existing Bridge - Some existing bridge decks (i.e. overhangs) may be overstressed due to a rail impact loads. In those cases, ~~do not make things worse with the rail retrofit~~consider either deck strengthening or request a Design Exception to leave non-standard bridge rail in place. Check for structural reinforcing in the existing rail, specifically in negative moment regions.

f. Where applicable, use one of the Standard Retrofit Drawings (see ~~*Figure*~~ *Table 1.13.2.4*). Where it is not feasible to use a Standard Drawing, use a crash tested rail or a rail that emulates one and request a Design Deviation.

g. Estimate Cost.

STANDARD RETROFIT DETAILS

DRAWING NO.	DESCRIPTION	*CRASH TESTED	PERF. LEVEL
BR270	Rail Transition From Thrie Beam to Curb and Parapet Rail	YES	PL-2 (TL-4)
BR273	Thrie Beam Rail Retrofit For Curb and Parapet Rail Connection Details	YES	PL-2 (TL-4)
BR280	~~Concrete Rail Type "F" Replacement For Curb and Parapet Rail~~Type "F" Concrete Rail Replacement of Existing Parapet Rail	YES	PL-2 (TL-4)
BR283	Type "F" Concrete Rail Retrofit of Existing Parapet Rail~~Concrete Rail Type "F" Retrofit For Curb and Parapet Rail~~	YES	PL-2 (TL-4)

* Crash tested or similar to a rail that has been crash tested.

~~Figure~~ Table 1.13.2.4

Note that Standard Drawing BR276 and BR286 have been discontinued and moved to Standard Details *DET3276* and *DET3286*.

1.13.3 Impact Attenuators or Crash Cushions

1.13.3.1 Attenuator Design

Attenuators are required in areas, such as gore points of diverging roadways and columns in medians, where hazardous objects cannot be removed from the possible paths of vehicles.

The need for attenuators can often be eliminated by omitting or removing hazardous objects from gore areas. Non-breakaway sign supports are examples of such objects. Bridge parapets in gore areas may be avoidable when they occur near the end of a bridge, where their need can be eliminated by bridging the space between diverging roadways.

Space in a gore area is valuable as a recovery or evasive maneuver area. Therefore, always remove space wasting features such as curbs and raised pavements. This will avoid interference with the proper functioning of the crash attenuator and it can be located as far from the gore nose as possible.

Bridge will provide designs and plans for attenuators located on structures. Roadway will provide designs and plans for other locations.

~~Design guidelines and approved systems brochures are available in each Bridge Design Team's room.~~ Utilize attenuators that have passed NCHRP 350 testing on new project designs.

1.13.3.2 Chevrons

Reflective chevrons are detailed on attenuators to make them highly visible and give direction to traffic. Make sure they are correctly detailed, as shown below, on the plans. Refer to *SP 00940* and normally specify a Type "Y2" sign. Confirm the sign type with the Traffic Control Unit.

Figure 1.13.3

1.13.4 Protective Screening or Protective Fencing

Provide protective screening on overpasses (new or existing) at the following locations:

- All structures crossing freeways (interstates and similar controlled access highways with at least 4 lanes) that carry vehicles and/or pedestrians.
- Structures that have sidewalks and that cross high-speed facilities (posted speed ≥ 55 mph) and that are within ½ mile of a school, playground, park, athletic field, shopping center, or other facility likely to generate pedestrian traffic.
- All other structures (with or without sidewalks) crossing high-speed facilities with regular pedestrian traffic.
- Railroad overcrossings.

- Pedestrian structures.

Protective screening need not be provided at the following locations:

- ~~Protective screening need not be provided on f~~Freeway ramp structures that typically do not have any provisions for pedestrians.
- Where screening creates a sight distance hazard for motorists. However, approval of a design deviation is required. The basis for such a design deviation is discussed below.

1.13.4.1 Protective Screening Design Criteria

The protective screening shall be designed to deter persons from throwing objects from the overpasses onto the freeways. ~~Protective screening need not be provided where screening creates a sight distance hazard for motorists. However, approval of a design deviation is required. The basis for such a design deviation is discussed below.~~

~~Provide protective screening over all travel lanes plus a minimum of 10 feet beyond the travel lanes on each side. Where on or off ramps also cross under a structure, ensure screening also extends at least 10 feet beyond the end of any ramp travel lanes.~~

~~Screening is required for all structures crossing over a railroad. Extend screening 25 feet minimum from centerline of nearest track or railroad access road.~~

~~In areas where aesthetics is a consideration and when screening does not extend to the end of the structure, provide an additional transition panel (sloped panel or partial height panel) at the end of each run of screening as an aesthetic termination. For divided highways, continue protective screening uninterrupted through the median. For unusually wide medians and/or divided highways with a significant elevation difference for each direction, protective screening may be interrupted through the median with the use of transition panels, if appropriate.~~

~~Provide protective screening on both sides of a structure even when a sidewalk is provided on just one side. Where twin structures cross a high-speed facility, provide protective screening for the center opening between structures.~~
Design protective screening using the following criteria:

- Lightweight (less than 100 plf)
- Translucent (see through)
- Openings 3" square or less (normally a 2 inch chain link mesh is acceptable, with a 1 inch mesh for special cases)
- Minimize projected area (less than 30 percent)
- Difficult to climb (no handrail)
- Able to carry pedestrian rail loading
- No opening between the bottom of screening and top of curb, deck, sidewalk, or concrete bridge rail and ensure the bottom of screening has sufficient stiffness to prevent permanent large deflections
- Minimum 8 feet high (from top of walk surface), except 10 feet high at railroad overcrossings. When ornamental screening has a variable height, ensure minimum height is maintained at all locations that cross over travel lanes
- Provide splash boards in ice or snow zones at railroad crossings

Protective screening limits and extends:

- Provide protective screening over all travel lanes plus a minimum of 10 feet beyond the travel lanes on each side. Where on or off ramps also cross under a structure, ensure screening also

extends at least 10 feet beyond the end of any ramp travel lanes.

- Screening is required for all structures crossing over a railroad. Extend screening 25 feet minimum from centerline of nearest track or railroad access road.
- In areas where aesthetics is a consideration and when screening does not extend to the end of the structure, provide an additional transition panel (sloped panel or partial height panel) at the end of each run of screening as an aesthetic termination. For divided highways, continue protective screening uninterrupted through the median. For unusually wide medians and/or divided highways with a significant elevation difference for each direction, protective screening may be interrupted through the median with the use of transition panels, if appropriate.
- Provide protective screening on both sides of a structure even when a sidewalk is provided on just one side. Where twin structures cross a high-speed facility, provide protective screening for the center opening between structures

1.13.4.2 Design Deviation

~~Screening is required for all structures crossing over a railroad. Extend screening 25 feet minimum from centerline of nearest track or railroad access road.~~

~~In areas where aesthetics is a consideration and when screening does not extend to the end of the structure, provide an additional transition panel (sloped panel or partial height panel) at the end of each run of screening as an aesthetic termination. For divided highways, continue protective screening uninterrupted through the median. For unusually wide medians and/or divided highways with a significant elevation difference for each direction, protective screening may be interrupted through the median with the use of transition panels, if appropriate.~~

~~Provide protective screening on both sides of a structure even when a sidewalk is provided on just one side. Where twin structures cross a high-speed facility, provide protective screening for the center opening between structures.~~

When protective screening is not provided for structures otherwise meeting the criteria above, obtain approval of a design deviation from the State Bridge Engineer. Provide the following with any request for a design deviation:

- Basis for the proposed design deviation.
- Concurrence from the Region Roadway Manager.
- A plan of the bridge showing sight lines obstructed by the proposed screening if the basis for the exception is lack of sight distance.
- A description of pedestrian activity including width of sidewalks and proximity to pedestrian sources such as schools, playgrounds, or athletic fields.
- The history of incidents and/or signs of graffiti at the bridge site or sites in the vicinity.
- The distance to adjacent bridges also crossing the facility and whether they have screening.
- The approximate cost of widening the structure when widening would avoid a sight distance hazard.

Note that installation of protective screening is mandated by law (ORS 366.462). Proposals to deviate from the screening requirement must be complete and thorough. Public and/or legislative oversight of design deviations for protective screening is likely.

1.13.4.3 Other Considerations

~~Design protective screening using the following criteria:~~

- ~~Lightweight (less than 100 plf)~~

- ~~Translucent (see through)~~
- ~~Openings 3" square or less (normally a 2 inch chain link mesh is acceptable, with a 1 inch mesh for special cases)~~
- ~~Minimize projected area (less than 30 percent)~~
- ~~Difficult to climb (no handrail)~~

- ~~Able to carry pedestrian rail loading~~
- ~~No opening between the bottom of screening and top of curb, deck, sidewalk, or concrete bridge rail and ensure the bottom of screening has sufficient stiffness to prevent permanent large deflections~~
- ~~Minimum 8 feet high (from top of walk surface), except 10 feet high at railroad overcrossings. When ornamental screening has a variable height, ensure minimum height is maintained at all locations that cross over travel lanes~~
- ~~Provide splash boards in ice or snow zones at railroad crossings~~

Sight Obstruction - Screening may obscure the intersection sight distance at ramps, cross-streets, or driveway accesses off the end of the structure, non-signalized intersections increase this potential hazard. Stopping screening after it is no longer required may solve some of the problems. However, some cases will require specialized designs.

Vertically Curved Screening - Curved screening is not required, but may be considered when a sidewalk is present. Curvature is an additional deterrent because it forces the thrower into the roadway in order to clear the screening. Note that curved screening may cause an additional sight obstruction. Curved screening may require additional height to accommodate bicycles and, in some cases, horses with riders. Curved screening will not require end treatment.

Horizontally Curved Structures - On horizontally curved structures, give consideration to potential sight distance problems that may occur due to the screening. On structures with tight curves, it may be necessary to use straight screening rather than curved screening because it is difficult to construct curved screening on a tight curve and obtain proper fit of the chain link fabric. When chorded screening is used on a tight curve, ensure any "gap" between the bottom of screening and the curved edge of the bridge does not exceed 3 inches. Such "gaps" may be closed using plates attached to concrete surfaces near the bottom of the screening.

Under Structure Screening - In the Portland area, Region is concerned about homeless people sleeping under bridge end bents. In some cases chain link screening may not be adequate, because it is easily cut. Under structure screening in urban areas may need to be partially buried to prevent tunneling. Consult Region and local districts for end bent treatment.

Aesthetic Considerations – Chain link is the most economical screening available. However, chain link has very low aesthetic value. There are low-cost methods available for improving the aesthetics of chain link screening:

- End treatment – Providing a special termination section at each end of each screening run is a low-cost and effective aesthetic enhancement. This can be as simple as tapering the ends (for example, see *Dwg 65137*) or a reduced-height panel. Any end treatment with a height less than the minimum required must start at least 10 feet beyond any travel lanes or ramps (25 feet from tracks or access road for railroad crossings).

- Color – Use of vinyl-coated chain link can greatly improve the appearance of chain link at a very modest increase in cost. Possible colors are black, navy blue, or dark green depending on location. Hot-dip galvanize screening before vinyl-coating.

End treatment and color are proven ways to improve the aesthetics of chain link screening. There are likely other effective options. Designers are encouraged to seek input from others (designers, district,

and/or local community) when using aesthetic concepts outside these proven methods. What may appear attractive to a designer may not be desirable to others.

External Requests for Ornamental Screening – ODOT has received requests from local communities to install ornamental screening on existing structures. A number of issues must be addressed before a request can be processed:

- Funding – Ornamental screening can be included in ODOT Modernization projects, if deemed an important architectural item by the project team and supported by the Environmental study. For retrofit to an existing structure (not associated with an ODOT project), include possible funding sources with the proposal.

- Permits – If someone other than ODOT proposes to install a feature in ODOT Right-of-Way, they must obtain a permit from the District it is located in.

- Design – Do not create a distraction for drivers with ornamental protective screening. Check for any sight distance problems it could potentially create. Review design outside of ODOT's normal standards through a review process with the District, Tech Center, Office of Maintenance and others to assure it is appropriate and meets clearances and standards as given by ODOT.

- Maintenance – Responsibility for maintenance must be established in case of damage or deterioration. Districts are funded to maintain ODOT standards. If designed and installed by forces outside of ODOT, resources are required to maintain it which should include a bond, city or county taking responsibility.

Also see *BDDM 3.21.10*, "Structure Appearance and Aesthetics, Ornamentation".

1.13.4.4 Protective Screening Standard Details

Screening on new structures when needed, will be as follows and as shown on *Figure 1.13.4A* and Standard Drawings *BR240*, *BR241*, *BR242* and *BR245*, or Standard Detail *DET3243* and *DET3244*.

- Bridges with Sidewalks - See Details "A", "B", "C", "D" on *Figure 1.13.4A*.

    - If a barrier is placed between the sidewalk and roadway, use screening in place of a pedestrian rail along the outer edge of the structure.

    - If the sidewalk is not separated, place screening behind or attached to the combination rail along the outer edge of the structure.

- Pedestrian Bridges - See Detail "E" on *Figure 1.13.4A*. Pedestrian bridges will be screened in most instances, including all instances where pedestrian bridges cross a vehicular facility.

- Certain sweepers will not fit through curved fence enclosures. Region 1 sweepers measured 10'-5". Standard Drawing *BR240*, Type "A" Fence Section has provisions to allow access. Contact Region to determine an acceptable type of fence.

- Railroad Undercrossings - See Details "A", "B", "C", and "D" on *Figure 1.13.4A*.

    - Splash boards are required where switching is performed or where there are other frequent activities. Typical details are shown on *Figure 1.13.4B and 1.13.4C*.

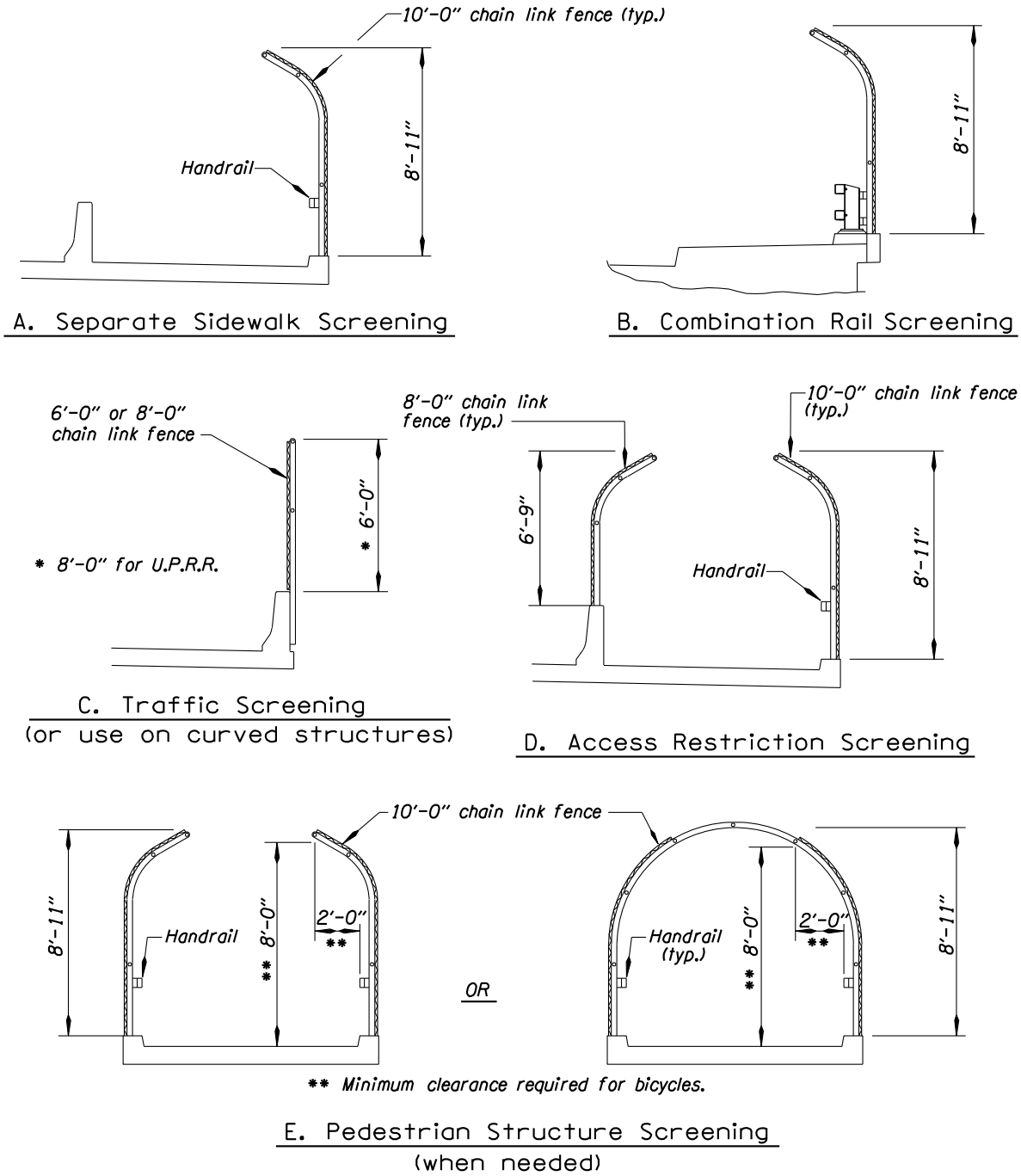

Figure 1.13.4A

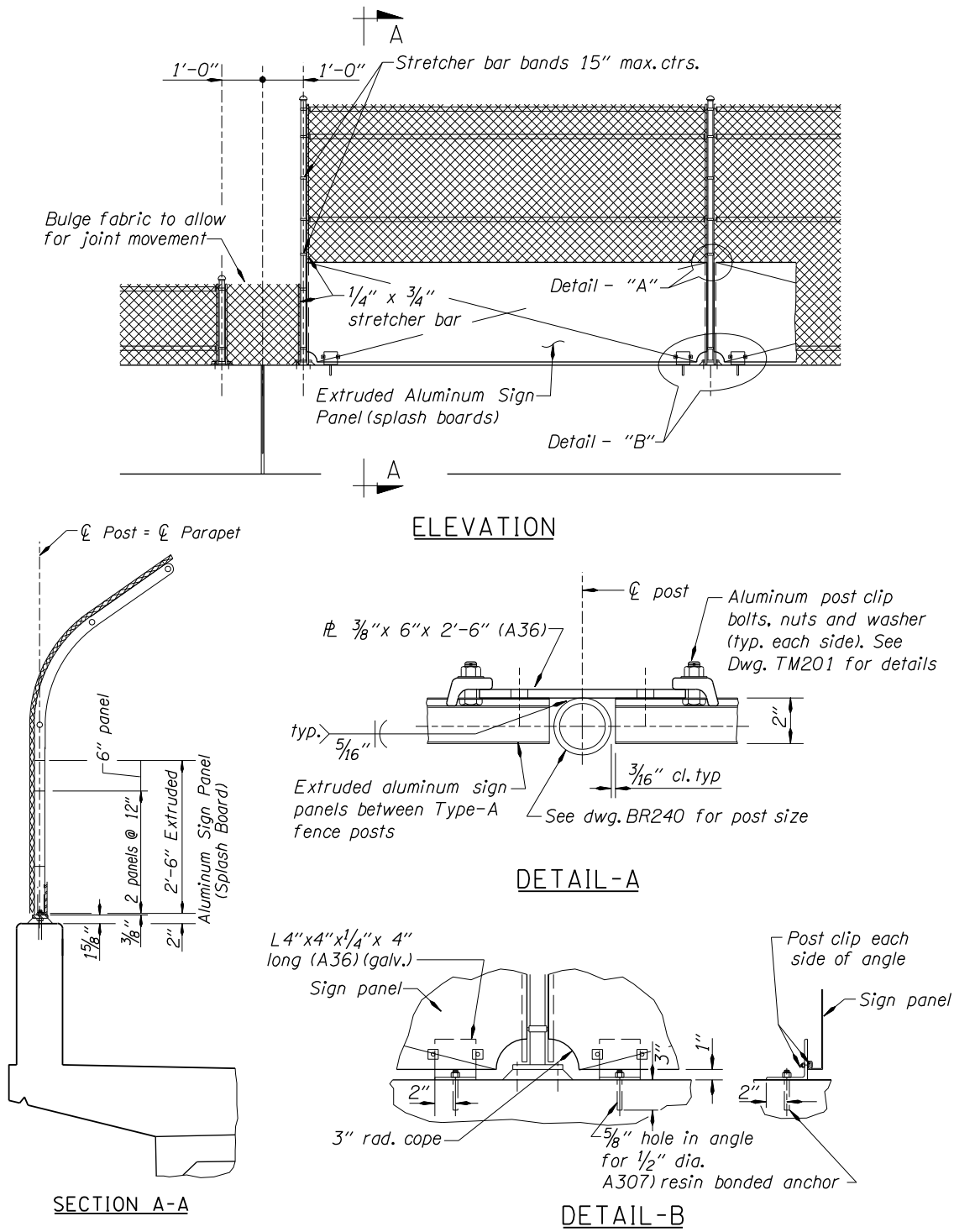

Figure 1.13.4B

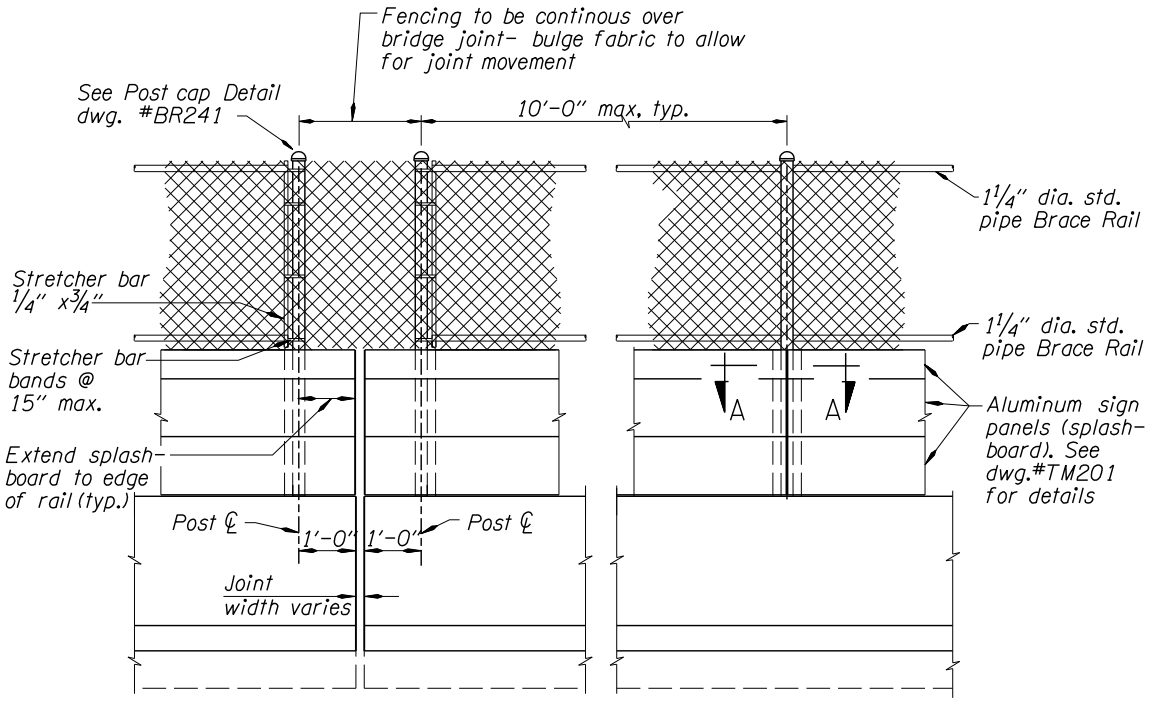

ELEVATION TYPE 'C' FENCE at DECK JOINTS

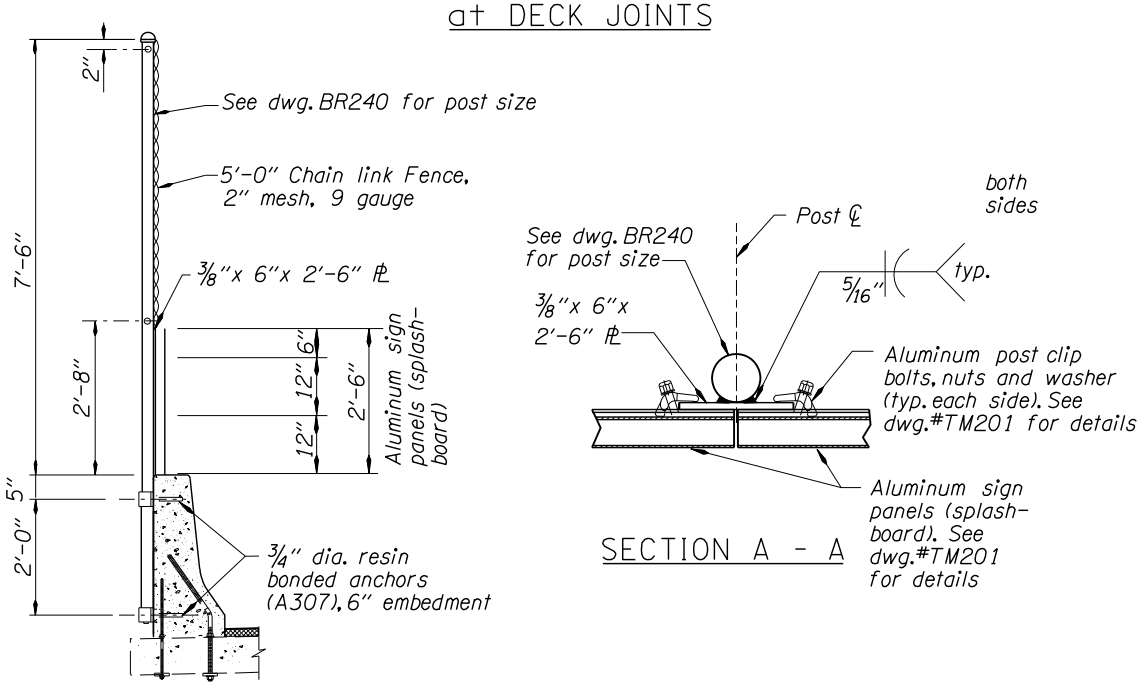

TYPE 'C' FENCE SECTION

SECTION A - A

Figure 1.13.4C

Analysis / Research / Other Supporting Data:

☒ None
☐ Attached:

Bridge Engineering Section Response:

☐ Accepted for consideration as submitted ☐ Accepted for consideration as noted ☐ Proposal tabled, see Remarks ☐ Proposal not accepted, see Remarks		
Remarks:		
Craig Shike Bridge Design Standards Reviewer		Date
Alex Lim Bridge Design Standards Engineer		Date 9/29/2016

Cc: file