Section 1

Introduction

1.1	Contacts	1
	Inspector’s Role	2
	Inspector’s Authority	3
	Basic Bridge Types	9
	Bridge Terminology	20

Instructors

Terry Thames, PE
Structure Quality Engineer
(541) 686-7598
Cell: (503) 510-3758

Jaime Viramontes, PE
Assistant Structure Services Engineer
(503) 986-5453
Cell: (971) 599-0992

Contacts

Materials Lab Phone List

MAIN: 503-986-3000
800 Airport Road, SE
Salem, OR 97301
Area Code 503 unless otherwise noted
Revised August 2016

Last Name	Primary Phone	Cell Phone	Working Title	Crew #
Baker, Vanessa	986.3050		eConstruction Program Analyst	7810
Bennett, Bill	986.6628	881.5650	Structural Materials Engineer	7870
Brophy, Kevin	986.3030		Laboratory Services Manager	7890
Brower, Kevin	986.6308		Laboratory Technician	7890
Brown, Norma Jean	986.3417		Petroleum Asst Crew Leader	7890
Brown, Terri	986.3080		Aggregate Asst. Crew Leader	7890
Brown, Wayne	986.3074		Bituminous/Petroleum/Chem Crew Leader	7890
Burkhart, Sophia	986.3770		Pavement Specialist	7894
Burns, Eric	986.3060		Computer Support Crew Leader	7890
Burton, Tony	986.3124		Pavements Field Crew	7894
Buswell, Matthew	986.3117		Engineering Specialist Temporary	7894
Butler, Lori	986.3007		Construction Program Analyst	7805
Chaney, Jordan	986-3116		Laboratory Technician	7890
Chess, Dean	986.3059		Product Evaluation Coordinator	7870
Cieslak, Jason	986.3081		Aggregate Crew Leader	7890
Cooley, Steve	986.3012	302.3637	Contract Administration Engineer	7810
Coplantz, John	986.3119		Pavement Management Engineer	7894
Crawford, Mary	986.3330	Tech Services	Construction Section Timesheet Coordinator	7002
Croff, Joel	986.3084		Document Compliance Specialist	7810
Dennee, Mike	986.3027		Contract Services Lead Worker	7810
Doll, Jim	986.3535	559.0084	Region Assurance Specialist	7810
Duman, Chris	986.6574		Assistant Pavement Materials Engineer	7894
Earnest, Timothy	986.3079		Pavement Specialist	7894
Espeland, Christopher	986.3093		Temporary Lab Technician	7890
FitzGerald, Randy	986.3087	551.5633	Laboratory Quality Assurance Technician	7890
Foster, Diana	986.6638	779.9307	Labor Compliance Officer	7810
Ganahl, Jerry	986.3194		Soils Asst. Crew Leader	7890
Grenz, Travis	986.3098		Interim Pavement Specialist	7894
Guthrie, Greg	986.3089		Physical Testing Crew Leader	7890
Gustafson, Derek	986.3182		Temporary Lab Technician	7890
Hansen, Bill	986.3124		Pavements Field Crew	7894
Harriman, Barbara	986.3004		Building Manager	7805
Harrington, Morgan	986.3001		Executive Support Specialist	7805
Herring, Susan	986.3009		Construction Program Coordinator	7805
Huey, Bradlee	986.5195		Temporary Lab Technician	7890
Ilg, Larry	986.3072	559.4994	Pavement Quality & Materials Engineer	7894
Johnson, Austin	986.5461	510.1384	Concrete Quality Coordinator	7870
Kahl, Stephen	986.3066		Pavements Intern	7894
Kandle, Brett	986.4369		Fiscal Analyst 1	7805
Kendrick, Shelly	986.5460		Construction Program Support	7805
Lovingier, Corry	986.3052		Pavement Specialist	7894
McClary, Erik	986.3090		Physical Testing Lab Technician	7890
McGrath, Paul	986.3073		Bituminous Asst. Crew Leader	7890
Metz, Mike	986.3095	971.304.5775	Contract Administration RAS	7810
Miller, Reid	986.3124		Pavements Field Crew	7894
Moderie, Justin	986.3115	510.0581	Interim Pavement Services Engineer	7894
Moore, Derek	986-6630	983-6471	Quality Assurance Specialist	7840
Nelson, Scott	986.3056	881.7001	Structure Services Engineer	7870
Parker, Sean	986.6631	710.2562	Certification Program Coordinator	7840

Pick, Holli	986.3136	385.5348	Construction Claims Specialist	7810
Postier, Summer	986.3029		Contract Administration Specialist	7810
Powell, Michael	986.3077		Laboratory Technician	7890
Rodriguez, Rebecca	986.3076		Soils Crew Leader	7890
Scott, Karen	986.3014		Pavement Design Coordinator	7894
Scott, Ken	986.3065		Chemistry Lab Technician	7890
Sealy, James	986.3028		Contract Payments Specialist	7810
Shrader, Beth	986.3042		Business Administrative Specialist	7805
Shrader, Jesse	986.3121		Pavement Management Technician	7894
Smith, Rodney	986.6626		Materials Lab Receiving	7890
Squire, Joe	986.3123	871.9259	State Construction & Materials Engineer	7800
Stellmach, Greg	986.3061	508.3854	Quality Assurance Engineer	7840
Stennett, Mike	986.3118	385.6047	Asst. Pavement Quality Engineer	7894
Stinson, Richard	986.3124		Pavements Field Crew Leader	7894
Stutzman, Adam	986.3782		AMRL/LIMS Specialist	7890
Sullivan, Brian	986.3114		Pavement Design Specialist	7894
Viramontes, Jaime	986.5453	971.599.0992	Assistant Structure Services Engineer	7870
Wilborn, Gene	986.3135	541.905.7054	Construction Claims Engineer	7810
Zigler, Dan	986.3117	510.3183	Pavement Management Technician	7894
BUSINESS SERVICES FAX	986.3096			
RECEIVING AREA FAX	986.4363			
LAB FAX	986.4363			
CONTRACT ADMIN FAX	986.4378			
LARGE CONF RM.	986.5467			
SMALL CONF RM.	986.5466			
FRONT CONF RM.	986.5467			
LUNCH RM	986.3088			
ARCHIVE RM.	986-6627			

EMAIL DISTRIBUTION GROUPS

All Tech Serv Construction	(All Construction Section Employees)
ODOT Materials Lab All Building	(All employees located in the lab building)
ODOT Materials Lab Construction Group	(Constr.Section Empl.located in lab bldg.)

Contact Sheet
Contract Adminstration
Crew #7810

Last Name	Primary Phone	Cell Phone	Working Title
Headquarters	800 Airport Road Salem, OR 97301		Fax: 503.986.3096
Baker, Vanessa	503-986-3050		eConstruction Program Analyst
Cooley, Steve	503-986-3012	503-302-3637	Contract Administration Engineer
Dennee, Mike	503-986-3027		Contract Services Lead Worker
Doll, Jim	503-986-3535	503-559-0084	Region Assurance Specialist
Foster, Diana	503-986-6638	503-779-9307	Labor Compliance Officer
Croff, Joel	503-986-3084		Documentation Specialist
Metz, Mike	503-986-3095	971-3304-5775	Region Assurance Specialist
Pick, Holli	503-986-3136	503-385-5348	Construction Claims Specialist
Postier, Summer	503-986-3029		Contract Services Specialist
Sealy, James	503-986-3028		Construction Payment Specialist
Wilborn, Gene	503-986-3135	541-905-7054	Construction Claims Engineer
Region 1	3700 SE 92nd Ave. Portland, OR 97266		Fax: 503.731.3252
Rodriguez, Tony	503-731-3265	503-781-7615	Region Assurance Specialist
Sylvia, Merry	503-731-4517	503-781-9317	Region Assurance Specialist
Mary Saba	503-731-4144	503-621-2047	Region Assurance Specialist
Region 2	455 Airport Road Bldg B, Salem, OR 97301		Fax: 503.986.2838
Anello, Paul	503-986-2641	541-430-2386	Region Assurance Specialist
Region 3	100 Antelope Road, White City, OR 97503		Fax: 541.774.6349
Cave, Cheryl	541-774-6384	541-890-6199	Region Assurance Specialist
Region 3	3500 NW Stewart Pkwy, Roseburg, OR 97470		Fax: 541.957.3547
Aker, Scott	541-957-3514	541-784-7721	Interim Region Assurance Specialist
Region 5	3012 Island Ave, La Grande, OR 97850		
Eric Knapp	541-823-4023	541-740-0901	Region Assurance Specialist

Contact Sheet
Quality Assurance Team
Crew #7840

Last Name	Primary Phone	Cell Phone	Working Title
Headquarters	800 Airport Road Salem, OR 97301		Fax: 503.986.3096
Greg Stellmach	503-986-3061	503-508-3854	Quality Assurance Engineer
Parker, Sean	503-986-6631	503-710-2562	Certification Program Coordinator
Derek Moore	503-986-6630	503-983-6471	Quality Assurance Specialist
Region 1	3700 SE 92nd Ave. Portland, OR 97266		Fax: 503.731.3252
Huber, Josh	503-731-8269	503-969-6729	R1 Quality Assurance Technician
Deo, Atma	503-731-8295	503-702-2859	R1 Asst. Quality Assurance Coordinator
Worbington, Barb	503-731-3167	503-703-3959	R1 Quality Assurance Coordinator
Region 2	455 Airport Road Bldg X, Salem, OR 97301		Fax: 503.986.2838
Adams, Shirley	503-986-2642	503-385-7588	R2 Quality Assurance Technician
Bond, Joseph			R2 Quality Assurance Technician
Le Francois, Ray	503-986-2804	503-780-2353	R2 Asst. Quality Assurance Coordinator
McKay, Bill	503-986-2808	503-580-3182	R2 Quality Assurance Technician
Young, Scott	503-986-2775	503-510-2708	R2 Quality Assurance Coordinator
Region 3	3500 NW Stewart Pky, Roseburg, OR 97470		Fax: 541.440.3434
Carlock, Matt	541-440-3479	541-731-3650	R3 Asst. Quality Assurance Coordinator
Clark, Andrew	541-957-3682	541-580-6550	R3 Quality Assurance Coordinator
Savage, Rod	541-440-3324	541-784-6750	R3 Quality Assurance Technician
Reg 3 Lab	541-957-3682	541-440-3348	Reg 3 Lab
Region 4	63055 N. Hwy 97, Bend, OR 97701		Fax: 541.388.6104
Cunningham, Ray	541-388-6179	541-480-9805	R4 Quality Assurance Technician
Groth, John	541-388-6308	541-419-2275	R4 Asst. Quality Assurance Coordinator
Kirkland, Dave	541-388-6137	541-419-1636	R4 Quality Assurance Coordinator
Region 5	3012 Island Avenue, La Grande, OR 97850		Fax: 541.963.1903
Brown, James	541-963-1596	541-786-0948	R5 Quality Assurance Coordinator
Depuy, Ralph	541-963-1337	541-786-0947	R5 Asst. Quality Assurance Coordinator
Kerr, Bob	541-963-1388	541-786-0946	R5 Quality Assurance Technician
Morrison, Travis	541-963-1388	503.507.7563	Engineering Construction Intern

Structure Services Group
Materials Lab Inspectors
Milwaukie, Springfield and Bend
Crew 7870

Last Name	Primary Phone	Cell Phone	Working Title
Headquarters Materials Lab: 800 Airport Rd, SE, Salem, OR 97301 503.986.3001, Fax 503-986-3096			
Nelson, Scott	503.986.3056	503.881.7001	Structure Services Engineer
Bennett, Bill	503.986.6628	503.881.5650	Structure Materials Engineer
Chess, Dean	503.986.3059		Product Evaluation Coordinator
Viramontes, Jaime	503.986.5453	971-599-0992	Assistant Structure Services Engineer
Johnson, Austin	503.986.5461	503-510-1384	Concrete Quality Coordinator
Eugene Office: 1920 Henderson Ave., Eugene, OR 97403			
Thames, Terry	541-686-7598	503-510-3758	Structure Quality Engineer
Milwaukie Materials Lab: 11514 SE 37th Ave. Milwaukie, OR 97222, 971.673.7002, Fax 971.673.7010			
Boothe, Joel	971.673.3423	503.510.6213	Structure Coatings Engineer
Grey, John	971.673.7006	503.708.9806	Welding/NDE Inspector
Matt McHugh	971.673.7005	503.305.1159	Welding/NDE Inspector
Sabel, Jim	971.673.7007	503.708.9805	Inspection Crew Leader
Springfield Materials Lab: 644 A Street, Springfield, OR 97477, 541.736.2848, Fax 541.744-8088			
Thornton, Don	541.736.2848	541.654.3872	Inspection Crew Leader
Thomason, Chris	541.736.2849	541.255.5297	Prestress General Inspector

ODOT BRIDGE SECTION SPECIALTY LIST

All Numbers are 503 Area Code unless otherwise noted						
ODOT BRIDGE SPECIALTY LIST	Lead Contact	PHONE NO.	Prim. Backup	PHONE NO.	Alt. Backup	PHONE NO.
Bridge Engineer	Bruce Johnson	986-3344	Bert Hartman	986-3395		
Bridge Program	Bruce Johnson	986-3344	Bert Hartman	986-3395	Elizabeth (Liz) Hunt	986-3358
Bridge Budget	Bruce Johnson	986-3344	Elizabeth (Liz) Hunt	986-3358	Jeff Johnson	986-3864
Bridge Practices & Procedures Manual (BPPM)	Jeff Johnson	986-3864	Bruce Johnson	986-3344		
Bridge Log	Corey Withroe	986-3339	Bert Hartman	986-3395		
Bridge Internet Website	Gene Leon	986-3319	Douglas Sloan	986-3753	Charlotte Davidson	986-3209
Bridge Intranet Website	Gene Leon	986-3319	Douglas Sloan	986-3753	Charlotte Davidson	986-3209
Bridge Program Unit	Bert Hartman	986-3395	Jon Rooper	986-3357		
Bridge Management System	Bruce Novakovich	986-3378	Bert Hartman	986-3395		
BRASS Load Rating Application	Jon Rooper	986-3357	Bert Hartman	986-3395		
STIP, State	Rachelle Nelson	986-3391	Elizabeth (Liz) Hunt	986-3358	Bert Hartman	986-3395
STIP, Local Agency	Holly Winston	986-3356	Rachelle Nelson	986-3391	Bert Hartman	986-3395
OTIA	Tim Dodson	986-3311	Bruce Johnson	986-3344	Bert Hartman	986-3395
Major Bridge Maintenance Program (MBM)	Travis Kinney	986-4010	Bert Hartman	986-3395	Jeff Swanstrom	986-2659
Cost Data	Theresa Yih	986-3498	Elizabeth (Liz) Hunt	986-3358		
Bridge Load Ratings	Jon Rooper	986-3357	Joe Charbonneau	986-3387	Travis Kinney	986-4010
Overload Permit Reviews	Joe Charbonneau	986-3387	Jon Rooper	986-3357	John Milcarek	986-3537
Bridge Condition Report	Elizabeth (Liz) Hunt	986-3358	Bert Hartman	986-3395		
Program Evaluation Report	Elizabeth (Liz) Hunt	986-3358	Bert Hartman	986-3395		
Bridge Needs Report	Elizabeth (Liz) Hunt	986-3358	Bert Hartman	986-3395		
Performance Measures	Elizabeth (Liz) Hunt	986-3358	Bert Hartman	986-3395		
Bridge Preservation Unit	Ray Bottenberg	986-3318	Steve Lovejoy	986-3326		
Bridge Computer Applications	Rebecca Burrow	986-4008	Jon Rooper	986-3357		
Bridge Drawing System (BDS)	Rebecca Burrow	986-4008	Paul Tichenor	986-3366		
Coastal Bridge Program	Ray Bottenberg	986-3319	Mats Halvardson	986-3325		
Corrosion and Cathodic Protection	Ray Bottenberg	986-3318	James Garrard Jr.	986-3315		
Covered Bridges / Historic Bridges	Rebecca Burrow	986-4008	Bruce Johnson	986-3344		
Structural Health Instrumentation / Monitoring	Steve Lovejoy	986-3326	James Garrard Jr.	986-3315		
Fracture Control	Steve Lovejoy	986-3326	Scott Nelson	986-3056		
Movable Bridges - Electrical	David Johnson	986-3329	James Garrard Jr.	986-3315		
Movable Bridges - Mechanical	Steve Lovejoy	986-3326	Ray Bottenberg	986-3318		
Installing Utilities on Bridges	Ray Bottenberg	986-3318	James Garrard Jr.	986-3315		
Paint Program	Joel Boothe	510-6213	Ray Bottenberg	986-3318	James Garrard Jr.	986-3315
Welding	Steve Lovejoy	986-3326	Ray Bottenberg	986-3318	Mats Halvardson	986-3325
Permanent Fall Arrest Systems	Ray Bottenberg	986-3318	Jeff Swanstrom	986-2659		
Bridge Standards Unit	Craig Shike	986-3323	Scott Liesinger	986-4324		
Bridge Design and Drafting Manual (BDDM)	- - - -		- - - -		- - - -	
Section 1 - Design	Alex Lim	986-3402	Craig Shike	986-3323		
Section 2 - Drafting	Sandra Gish	986-3362	Gene Leon	986-3319		
Section 3 - Processes and Layout	Alex Lim	986-3402	Craig Shike	986-3323		
Accelerated Bridge Construction	Albert Nako	986-3333	Bruce Johnson	986-3344		
Aesthetics	Craig Shike	986-3323	Hormoz Seradj	986-3346		
Bearings	Hormoz Seradj	986-3346	Scott Nelson	986-3056		
Bolted Connections	Hormoz Seradj	986-3346	Steve Lovejoy	986-3326		
Bridge Design Software	Rebecca Burrow	986-4008	Jon Rooper	986-3357		
Bridge Railings	Alex Lim	986-3402	Craig Shike	986-3323	Bruce Johnson	986-3344
CAD Standards & Practices	Sandra Gish	986-3362	Gene Leon	986-3319		
Deck Design	Alex Lim	986-3402	Craig Shike	986-3323		
Deck Drainage	Alex Lim	986-3402	Craig Shike	986-3323		
End Panels	Alex Lim	986-3402	Craig Shike	986-3323		
Expansion Joints	Hormoz Seradj	986-3346	Sean White	986-2787	Scott Nelson	986-3056
Falsework / Shoring	Hormoz Seradj	986-3346	Nowzar Ardalan	731-4964		
Foundations	Susan Ortiz	986-3377	Jon Guido	986-3993	Pete Castro	541-957-3603
FRP Strengthening Systems	Tanarat Potisuk	986-3342	Matt Stucker	986-2791	Nowzar Ardalan	731-4964
Hydraulics/Hydrology/Scour	Ed Foltyn	986-3521	Paul Wirfs	386-3526		
Integral Abutment	Hormoz Seradj	986-3346	Bruce Johnson	986-3344		
Internal Shear Anchors	Tanarat Potisuk	986-3342	Craig Shike	986-3323	Matt Stucker	986-2791
MathCAD Template Library	Craig Shike	986-3323	Gene Leon	986-3319		
Mechanical Rebar Splices	Ray Bottenberg	986-3318	Craig Shike	986-3323		
Microstation Support	Sandra Gish	986-3362	Gene Leon	986-3319		
New Products / QPL	Craig Shike	986-3323	Dean Chess	986-3059		
Overlays	Travis Kinney	986-4010	Bill Bennett	986-6628	Scott Liesinger	986-4324
Post-Tensioned Concrete Design	Tanarat Potisuk	986-3342	Bill Bennett	986-6628	Craig Shike	986-3323
Prestressed Precast Concrete Design	Tanarat Potisuk	986-3342	Craig Shike	986-3323	Matt Stucker	986-2791
Protective Screening	Craig Shike	986-3323	Alex Lim	986-3402	Gene Leon	986-3319
Reinforced Concrete Bridge Design	Craig Shike	986-3323	Scott Liesinger	986-4324	Matt Stucker	986-2791
Reinforcement	Craig Shike	986-3323	Ray Bottenberg	986-3318		
Resin Bonded Anchors	Tanarat Potisuk	986-3342	Craig Shike	986-3323	Ray Bottenburg	986-3318
Scour Monitoring	Ed Foltyn	986-3521	Rick Shorb	986-2979	Jeff Swanstrom	986-3337
Seismic Design / Retrofit Programs	Albert Nako	986-3333	Craig Shike	986-3323	Jan Six	986-3377
Seismic Instrumentation	Susan Ortiz	986-3377	Albert Nako	986-3333	Tanarak Potisuk	986-3342
Standard Drawings & Details	Gene Leon	986-3319	Sandra Gish	986-3362		
Steel Bridge Design	Hormoz Seradj	986-3346	Nowzar Ardalan	731-4964		
Timber Design	Holly Winston	986-3356	Rebecca Burrow	986-4008		
Training - Bridge Design Conference	Alex Lim	986-3402	Jeff Johnson	986-3864	Craig Shike	986-3323
Tunnels - Geotechnical Design	Jon Guido	986-3993	Susan Ortis	986-3377		
Tunnels - Structural Design	Albert Nako	986-3333	Bruce Johnson	986-3344		
Water Proof Membrane	Bill Bennett	986-6628	Scott Liesinger	986-4324		

All Numbers are 503 Area Code unless otherwise noted						
ODOT BRIDGE SPECIALTY LIST	Lead Contact	PHONE NO.	Prim. Backup	PHONE NO.	Alt. Backup	PHONE NO.
Bridge Inspection Program Unit	Craig Shike	986-3323	Jeff Swanstrom	986-3337		
Bridge Inspection Reports	Jeff Swanstrom	986-3337				
Element Coding Guide	Jeff Swanstrom	986-3337				
Pontis Data Entry	Erick Cain	986-3384	Jeff Swanstrom	986-3337	Bert Hartman	986-3395
Bridge Inspection Manual	Jeff Swanstrom	986-3337				
Bridge Maintenance / Repair	Travis Kinney	986-4010	Jeff Swanstrom	986-3337		
Bridge Inspection Team Leader Certification	Jeff Swanstrom	986-3337				
Underwater Bridge Inspection	Rick Shorb	986-2979	Jason Ottosen	986-2978	Scott Nelson	986-3056
Tunnels - Inspection / Condition Assessment	Jeff Swanstrom	986-3337	Jon Guido	986-3993		
Bridge Inspection Program - Region 1	Joel Boothe	971-673-7004	Robert Iwai	971-673-7004		
Bridge Inspection Program - Region 2	Michael Goff	986-2659	Kevin Shearmire	986-5760		
Bridge Inspection Program - Region 3	Josh Lonie	541-957-3587	Michael Goff	541-957-3687		
Bridge Inspection Program - Region 4	John Adkins	541-388-6188	Jeff Swanstrom	986-3337		
Bridge Inspection Program - Region 5	Kelley McAlister	541-963-1371	Jeff Swanstrom	986-3337		
Local Agency Bridge Inspection Program	Richard King	986-6575	Jeff Swanstrom	986-3337		
Other Public Agency Bridge Inspection Program	Jeff Swanstrom	986-3337				
Bridge Inventory Information and Data Access	Erick Cain	986-3384	Bert Hartman	986-3395		
Bridge Inspection Training Classes	Jeff Swanstrom	986-3337				
Bridge Maintenance Training	Jeff Swanstrom	986-3337	Richard King	986-6575		
Bridge Maintenance Conference	Jeff Swanstrom	986-3337				
Bridge Inspection Conference	Jeff Swanstrom	986-3337				
Bridge Design Unit	Scott Liesinger	986-4324	Bruce Johnson	986-3344		
Bridge Design Coordinator	Charlotte Davidson	986-3209				
Leadworker- Region 1	Tony Stratis	731-8481				
Leadworker- Region 2	Al Heyn	986-2774				
Leadworker- Region 3	Bob Grubbs	541-957-3579				
Leadworker- Region 4	Zach Beget	541-388-6254				
Leadworker- Region 5	George Bornstedt	541-963-1595				
Other Structural Specialties						
Engineering & Asset Management						
Concrete Box Culverts	Sophie Brown	986-3778	Rob Trevis	986-3860	Dan Gunther	986-3365
Pipes, Arches, 72" or greater	Rob Trevis	986-3860	Dan Gunther	986-3365	Jon Guido	986-3393
Retaining Walls	Sophie Brown	986-3778	Jon Guido	986-3393		
Sound Walls	Sophie Brown	986-3778	Jon Guido	986-3393		
Roadway Engineering Section						
Median/Shoulder Barrier	Tracy Harris	986-3727	Heidi Shoblom	986-3667		
Pipes less than 72" diameter	Dave Polly	986-3738	Dan McMillen	986-3752		
Standard Manholes	Dave Polly	986-3738	Dan McMillen	986-3752		
Traffic Stuctures - Traffic Section						
Butterfly Sign Supports	Scott Jollo	986-3069				
Monotube Cantilever Sign Supports	Scott Jollo	986-3069				
Roadside Sign Supports	Scott Jollo	986-3069				
Signal / Luminaire Supports	Scott Jollo	986-3069				
Truss Bridges	Scott Jollo	986-3069				

TECHNICAL RESOURCE LIST

UPDATED 08-17-2016		TECHNICAL RESOURCES					STAKEHOLDER (Include in correspondence with Technical Resource)		Questions? E-mail: ODOT SPECIFICATIONS
Section	**Section Title**	**Primary Responsible Unit**	**Resource Position**	**Resource Name**	**Phone Number**	**Measurement and Payment Resource**	**Stakeholder Position**	**Stakeholder Name**	**Remarks**
00110	Organization, Conventions, Abbreviations, and Definitions	Project Letting	Specifications Engineer	Dan Anderson	(503) 986-3777	N/A			
00120	Bidding Requirements and Procedures	Project Letting	Specifications Engineer	Dan Anderson	(503) 986-3777	N/A			
00130	Award and Execution of Contract	Project Letting	Specifications Engineer	Dan Anderson	(503) 986-3777	N/A			
00140	Scope of Work	Project Letting	Specifications Engineer *	Dan Anderson	(503) 986-3777	N/A			* Specifications Engineer before Award. Contract Administration Engineer after Award.
00150	Control of Work	Project Letting	Specifications Engineer *	Dan Anderson	(503) 986-3777	N/A			* Specifications Engineer before Award. Contract Administration Engineer after Award.
00150.50	Cooperation with Utilities	Project Letting	Specifications Engineer *	Dan Anderson	(503) 986-3777	N/A			* Specifications Engineer before Award. Contract Administration Engineer after Award.
		Right of Way - Program Management	State Utility and Railroad Liaison	Heather Howe	(503) 986-3658				
00160	Source of Materials	Project Letting	Specifications Engineer *	Dan Anderson	(503) 986-3777	N/A			* Specifications Engineer before Award. Contract Administration Engineer after Award.
00165	Quality of Materials	Project Letting	Specifications Engineer *	Dan Anderson	(503) 986-3777	N/A	Construction QA Engineer	Greg Stellmach	* Specifications Engineer before Award. Construction QA Engineer after Award.
00170	Legal Relations and Responsibilities	Project Letting	Specifications Engineer *	Dan Anderson	(503) 986-3777	N/A			* Specifications Engineer before Award. Contract Administration Engineer after Award.
00180	Prosecution and Progress	Project Letting	Specifications Engineer *	Dan Anderson	(503) 986-3777	N/A			* Specifications Engineer before Award. Contract Administration Engineer after Award.
00190	Measurement of Pay Quantities	Project Letting	Specifications Engineer *	Dan Anderson	(503) 986-3777	N/A	Contract Administration Engineer	Measurement Payment	* Specifications Engineer before Award. Contract Administration Engineer after Award.
00195	Payment	Project Letting	Specifications Engineer *	Dan Anderson	(503) 986-3777	N/A	Contract Administration Engineer	Measurement Payment	* Specifications Engineer before Award. Contract Administration Engineer after Award.
00196	Payment for Extra Work	Project Letting	Specifications Engineer *	Dan Anderson	(503) 986-3777	N/A			* Specifications Engineer before Award. Contract Administration Engineer after Award.
00197	Payment for Force Account Work	Project Letting	Specifications Engineer *	Dan Anderson	(503) 986-3777	N/A			* Specifications Engineer before Award. Contract Administration Engineer after Award.
00199	Disagreements, Protests and Claims	Project Letting	Specifications Engineer *	Dan Anderson	(503) 986-3777	N/A			* Specifications Engineer before Award. Contract Administration Engineer after Award.
00205	Field Laboratory, Weighhouse, Etc.	Quality Assurance	Construction QA Engineer	Greg Stellmach	(503) 986-3061	Measurement Payment			
00210	Mobilization	Contract Administration	Contract Administration Engineer	Measurement Payment	(503) 986-3012	N/A			
00220	Accommodations for Public Traffic	Traffic Standards	Traffic Control Plans Engineer	Scott McCanna	(503) 986-3788	Measurement Payment			
00225	Work Zone Traffic Control	Traffic Standards	Traffic Control Plans Engineer	Scott McCanna	(503) 986-3788	Measurement Payment			
00230	Temporary Detours	Geo-Environmental	Geotechnical Engineer	Jon Guido	(503) 986-3993	Measurement Payment	Traffic Control Plans Engineer	Scott McCanna	Stand Alone Special Provision
							Pavement Design Engineer	Justin Moderie	
							Geotechnical Engineer	Jon Guido	
00235	Agency Provided Material Sources & Disposal Sites	Geo-Environmental	Asst. Statewide Aggregate Resource Coordinator	Scott Billings	(541) 388-6097	Measurement Payment			Stand Alone Special Provision
00240	Temporary Drainage Facilities	Geo-Environmental	Sr. Hydraulic Engineer	Alvin Shoblom	(503) 986-3365	Measurement Payment			
00245	Temporary Water Management	Geo-Environmental	Sr. Hydraulic Engineer	Alvin Shoblom	(503) 986-3365	Measurement Payment	Aquatics Biology Program Leader	Bill Warncke	
00250	Temporary Detour Bridges (Contractor Provided)	Bridge Engineering	Steel Standards Engineer	Hormoz Seradj	(503) 986-3346	Measurement Payment			Stand Alone Special Provision
00251	Agency Provided Temporary Bridges	Bridge Engineering	Steel Standards Engineer	Hormoz Seradj	(503) 986-3346	Measurement Payment			Stand Alone Special Provision
00252	Temporary Work Bridges	Bridge Engineering	Steel Standards Engineer	Hormoz Seradj	(503) 986-3346	Measurement Payment			Stand Alone Special Provision

TECHNICAL RESOURCE LIST

UPDATED 08-17-2016		TECHNICAL RESOURCES					STAKEHOLDER (Include in correspondence with Technical Resource)		Questions? E-mail: ODOT SPECIFICATIONS
Section	Section Title	Primary Responsible Unit	Resource Position	Resource Name	Phone Number	Measurement and Payment Resource	Stakeholder Position	Stakeholder Name	Remarks
00253	Temporary Work Platforms	Bridge Engineering	Corrosion Protection Technician	David Dobson	(503) 986-4029	Measurement Payment			Stand Alone Special Provision
00254	Temporary Work Access	Bridge Engineering	Corrosion Protection Technician	David Dobson	(503) 986-4029	Measurement Payment			Stand Alone Special Provision
00256	Temporary Retaining Walls	Geo-Environmental	Retaining Wall Engineer	Sophie Brown	(503) 986-3778	Measurement Payment			Stand Alone Special Provision
00270	Temporary Fences	Roadway Engineering	Standards Engineer	Dave Polly	(503) 986-3738	Measurement Payment			Stand Alone Special Provision
00280	Erosion and Sediment Control	Geo-Environmental	Erosion Control	Raghu Namburi	(503) 986-3551	Measurement Payment			
00290.00	Scope	Geo-Environmental	Natural Resources Unit Manager	John Raasch	(503) 986-3370	Measurement Payment	Environmental Planning Unit Manager	James Norman	For Areas Not Listed
00290.10	Staging and Disposal Sites	Geo-Environmental	Asst. Statewide Aggregate Resource Coordinator	Scott Billings	(541) 388-6097	Measurement Payment			
00290.11	Water Conservation	Geo-Environmental	Aquatic Biology Program Lead	Bill Warncke	(503) 986-3459	Measurement Payment			
00290.20	Waste, Hazardous Waste, & Hazardous Substances	Geo-Environmental	Hazardous Material Program Lead	Shawn Rapp	(503) 986-3478	Measurement Payment			
00290.29	Health and Safety	Geo-Environmental	Hazardous Material Program Lead	Shawn Rapp	(503) 986-3478	Measurement Payment			
00290.30	Pollution Control	Geo-Environmental	Hazardous Material Program Lead	Shawn Rapp	(503) 986-3478	Measurement Payment			
00290.32	Noise Control	Geo-Environmental	Acoustical Specialist	Carole Newvine	(503) 986-3447	Measurement Payment			
00290.34	Protection of Fish and Fish Habitat	Geo-Environmental	Aquatic Biology Program Lead	Bill Warncke	(503) 986-3459	Measurement Payment			
00290.34(c-2)	Work Area Isolation	Geo-Environmental	Sr. Hydraulic Engineer	Alvin Shoblom	(503) 986-3365	Measurement Payment			Stand Alone Special Provision
00290.36	Protection of Wildlife and Wildlife Habitat	Geo-Environmental	Terrestrial Biology Program Leader	Christine Maguire	(503) 986-3385	Measurement Payment			
00290.38	Protection of Plants	Geo-Environmental	Statewide Program Coord. for Roadside Development and Erosion Control	Bob Marshall	(503) 986-3512	Measurement Payment			
00290.40	Protection of Forests	Geo-Environmental	Statewide Program Coord. for Roadside Development and Erosion Control	Bob Marshall	(503) 986-3512	Measurement Payment			
00290.41	Protection of Wetlands	Geo-Environmental	Wetland Program Coordinator	Brad Livingston	(503) 986-3062	Measurement Payment			
00290.42	Work Containment Plan and System	Geo-Environmental	Aquatic Biology Program Lead	Bill Warncke	(503) 986-3459	Measurement Payment			Stand Alone Special Provision
00290.42(a)	Work Containment Plan	Geo-Environmental	Aquatic Biology Program Lead	Bill Warncke	(503) 986-3459	Measurement Payment			Stand Alone Special Provision
00290.42(b)	Work Containment System	Bridge Engineering	Corrosion Engineer	Ray Bottenberg	(503) 986-3318	Measurement Payment			Stand Alone Special Provision
00290.50	Protection of Cultural Resources	Geo-Environmental	Cultural Resources Program Manager	Carolyn Holthoff	(503) 986-3309	Measurement Payment			
00290.51	Protection of Sensitive Cultural Sites	Geo-Environmental	Cultural Resources Program Manager	Carolyn Holthoff	(503) 986-3309	Measurement Payment			
00293	Decommission Underground Storage Tanks	Geo-Environmental	Hazardous Material Program Lead	Shawn Rapp	(503) 986-3478	Measurement Payment			Stand Alone Special Provision
00294	Contaminated Media	Geo-Environmental	Hazardous Material Program Lead	Shawn Rapp	(503) 986-3478	Measurement Payment			Stand Alone Special Provision
00295	Asbestos Materials	Geo-Environmental	Hazardous Material Program Lead	Shawn Rapp	(503) 986-3478	Measurement Payment			Stand Alone Special Provision
00296	Paint and Painted Materials	Geo-Environmental	Hazardous Material Program Lead	Shawn Rapp	(503) 986-3478	Measurement Payment			Stand Alone Special Provision
00297	PCB and Mercury Containing Equipment	Geo-Environmental	Hazardous Material Program Lead	Shawn Rapp	(503) 986-3478	Measurement Payment			Stand Alone Special Provision
00298	Well Preservation and Abandonment	Geo-Environmental	Geology Program Leader	Curran Mohney	(503) 986-3490	Measurement Payment			Stand Alone Special Provision

TECHNICAL RESOURCE LIST

UPDATED 08-17-2016		TECHNICAL RESOURCES					STAKEHOLDER (Include in correspondence with Technical Resource)		Questions? E-mail: ODOT SPECIFICATIONS
Section	Section Title	Primary Responsible Unit	Resource Position	Resource Name	Phone Number	Measurement and Payment Resource	Stakeholder Position	Stakeholder Name	Remarks
00299	Decommission Underground Injection Control Systems	Geo-Environmental	Hazardous Material Program Lead	Shawn Rapp	(503) 986-3478	Measurement Payment			Stand Alone Special Provision
0A299	Decommission Septic Tanks	Geo-Environmental	Hazardous Material Program Lead	Shawn Rapp	(503) 986-3478	Measurement Payment			Stand Alone Special Provision
00305	Construction Survey Work	Geometronic	Geometronic Manager	Ron Singh	(503) 986-3033	Measurement Payment			
00310	Removal of Structures and Obstructions	Roadway Engineering	Specifications Engineer	Dan Anderson	(503) 986-3777	Measurement Payment			
00320	Clearing and Grubbing	Roadway Engineering	Specifications Engineer	Dan Anderson	(503) 986-3777	Measurement Payment			
00330	Earthwork	Geo-Environmental	Geotechnical Engineer	Jon Guido	(503) 986-3993	Measurement Payment	Construction QA Engineer Pavement Design Engineer	Greg Stellmach Justin Moderie	
00331	Subgrade Stabilization	Pavement Services	Pavement Design Engineer	Justin Moderie	(503) 986-3122	Measurement Payment	Construction QA Engineer	Greg Stellmach	
00333	Aggregate Ditch Lining	Geo-Environmental	Sr. Hydraulic Engineer	Alvin Shoblom	(503) 986-3365	Measurement Payment	Construction QA Engineer	Greg Stellmach	Stand Alone Special Provision
00334	Preparation of Shoulders	Pavement Services	Pavement Design Engineer	Justin Moderie	(503) 986-3122	Measurement Payment			Stand Alone Unique Specification
00335	Blasting Methods & Protection of Excavation Backslopes	Geo-Environmental	Asst. Statewide Aggregate Resource Coordinator	Scott Billings	(541) 388-6097	Measurement Payment			
00340	Watering	Geo-Environmental	Geotechnical Engineer	Jon Guido	(503) 986-3993	Measurement Payment			
00344	Treated Subgrade	Pavement Services	Pavement Design Engineer	Justin Moderie	(503) 986-3122	Measurement Payment	Pavement Design Engineer	Justin Moderie	
00350	Geosynthetic Installation	Geo-Environmental	Geotechnical Engineer	Jon Guido	(503) 986-3993	Measurement Payment	Pavement Design Engineer	Justin Moderie	
00360	Drainage Blankets	Geo-Environmental	Geotechnical Engineer	Jon Guido	(503) 986-3993	Measurement Payment	Construction QA Engineer	Greg Stellmach	
00370	Finishing Roadbeds	Roadway Engineering	Standards Engineer	Dave Polly	(503) 986-3738	Measurement Payment			
00380	Roadwork, Hourly Rate Basis	Geo-Environmental	Geotechnical Engineer	Jon Guido	(503) 986-3993	Measurement Payment			Stand Alone Special Provision
00390	Riprap Protection	Geo-Environmental	Sr. Hydraulic Engineer	Alvin Shoblom	(503) 986-3365	Measurement Payment	Construction QA Engineer	Greg Stellmach	
00396	Shotcrete Slope Stabilization	Geo-Environmental	Asst. Statewide Aggregate Resource Coordinator	Scott Billings	(541) 388-6097	Measurement Payment	Construction QA Engineer	Greg Stellmach	
00398	Rock Slope Stabilization and Reinforcement	Geo-Environmental	Asst. Statewide Aggregate Resource Coordinator	Scott Billings	(541) 388-6097	Measurement Payment			
00405	Trench Excavation, Bedding, and Backfill	Roadway Engineering	Standards Engineer	Dave Polly	(503) 986-3738	Measurement Payment	Construction QA Engineer	Greg Stellmach	
00406	Tunneling, Boring, and Jacking	Geo-Environmental	Geotechnical Engineer	Jon Guido	(503) 986-3993	Measurement Payment			
00410	Common Provisions for Pipe Lining	Geo-Environmental	Culvert Design Engineer	Rob Trevis	(503) 986-3860	Measurement Payment			
00411	Pipe Bursting and Slip Lining	Geo-Environmental	Culvert Design Engineer	Rob Trevis	(503) 986-3860	Measurement Payment			
00412	Cured-In-Place Pipe Lining	Geo-Environmental	Culvert Design Engineer	Rob Trevis	(503) 986-3860	Measurement Payment			
00415	Video Pipe Inspection	Roadway Engineering	Standards Engineer	Dave Polly	(503) 986-3738	Measurement Payment			
00420	Salvaging Pipe	Roadway Engineering	Standards Engineer	Dave Polly	(503) 986-3738	Measurement Payment			
00430	Subsurface Drains	Geo-Environmental	Geology Program Leader	Curran Mohney	(503) 986-3490	Measurement Payment	Construction QA Engineer	Greg Stellmach	
00432	Wearing Surface Drains	Pavement Services	Pavement Design Engineer	Justin Moderie	(503) 986-3122	Measurement Payment			

TECHNICAL RESOURCE LIST

UPDATED 08-17-2016		TECHNICAL RESOURCES					STAKEHOLDER (Include in correspondence with Technical Resource)		Questions? E-mail: ODOT SPECIFICATIONS
Section	Section Title	Primary Responsible Unit	Resource Position	Resource Name	Phone Number	Measurement and Payment Resource	Stakeholder Position	Stakeholder Name	Remarks
00435	Prefabricated Vertical Drains	Geo-Environmental	Geology Program Leader	Curran Mohney	(503) 986-3490	Measurement Payment	Standards Engineer	Dave Polly	
00440	Commercial Grade Concrete	Structure Services	Structural Materials Engineer	Bill Bennett	(503) 986-6628	Measurement Payment	Construction QA Engineer	Greg Stellmach	
00442	Controlled Low Strength Materials	Structure Services	Structural Materials Engineer	Bill Bennett	(503) 986-6628	Measurement Payment	Construction QA Engineer	Greg Stellmach	
00443	Rapid Setting Controlled Low Strength Materials	Structure Services	Structural Materials Engineer	Bill Bennett	(503) 986-6628	Measurement Payment			Stand Alone Unique Specification
00445	Sanitary, Storm, Culvert, Siphon, and Irrigation Pipe	Roadway Engineering	Standards Engineer	Dave Polly	(503) 986-3738	Measurement Payment	Construction QA Engineer	Greg Stellmach	
00446	Trench Drains	Roadway Engineering	Standards Engineer	Dave Polly	(503) 986-3738	Measurement Payment			Stand Alone Special Provision
00450	Structural Plate Shaped Structures	Geo-Environmental	Culvert Design Engineer	Rob Trevis	(503) 986-3860	Measurement Payment	Construction QA Engineer	Greg Stellmach	
00459	Cast-In-Place Concrete Pipe	Roadway Engineering	Standards Engineer	Dave Polly	(503) 986-3738	Measurement Payment	Construction QA Engineer	Greg Stellmach	Stand Alone Special Provision
00460	Paved Culvert End Slopes	Roadway Engineering	Standards Engineer	Dave Polly	(503) 986-3738	Measurement Payment			
00470	Manholes, Catch Basins, and Inlets	Roadway Engineering	Standards Engineer	Dave Polly	(503) 986-3738	Measurement Payment	Construction QA Engineer	Greg Stellmach	
00475	Drain Wells	Geo-Environmental	Geology Program Leader	Curran Mohney	(503) 986-3490	Measurement Payment			
00480	Drainage Curbs	Roadway Engineering	Standards Engineer	Dave Polly	(503) 986-3738	Measurement Payment	Construction QA Engineer	Greg Stellmach	
00490	Work on Existing Sewers and Structures	Roadway Engineering	Standards Engineer	Dave Polly	(503) 986-3738	Measurement Payment			
00495	Trench Resurfacing	Roadway Engineering	Standards Engineer	Dave Polly	(503) 986-3738	Measurement Payment			
00501	Bridge Removal	Bridge Engineering	BDDM Standards Engineer	Alex Lim	(503) 983-3402	Measurement Payment			
00503	Bridge Deck Cold Plane Pavement Removal	Bridge Engineering	BDDM Standards Engineer	Alex Lim	(503) 983-3402	Measurement Payment	Structure Services Engineer	Scott Nelson	
00510	Structure Excavation and Backfill	Bridge Engineering	Senior Bridge Geotechnical Engineer	Susan Ortiz	(503) 986-3377	Measurement Payment	Construction QA Engineer	Greg Stellmach	
00512	Drilled Shafts	Bridge Engineering	Senior Bridge Geotechnical Engineer	Susan Ortiz	(503) 986-3377	Measurement Payment	Construction QA Engineer	Greg Stellmach	
00515	Micropiles	Bridge Engineering	Senior Bridge Geotechnical Engineer	Susan Ortiz	(503) 986-3377	Measurement Payment	Construction QA Engineer	Greg Stellmach	Stand Alone Unique Specification
00520	Driven Piles	Bridge Engineering	Senior Bridge Geotechnical Engineer	Susan Ortiz	(503) 986-3377	Measurement Payment			
00530	Steel Reinforcement for Concrete	Bridge Engineering	Bridge Operations and Standards Engineer	Tanarat Potisuk	(503) 986-3342	Measurement Payment	Structure Services Engineer	Scott Nelson	
00532	Rebar Continuity	Bridge Engineering	Corrosion Engineer	Ray Bottenberg	(503) 986-3318	Measurement Payment			Stand Alone Special Provision
00535	Resin Bonded Anchor Systems	Bridge Engineering	Bridge Operations and Standards Engineer	Tanarat Potisuk	(503) 986-3342	Measurement Payment	Structure Services Engineer	Scott Nelson	
00536	Internal Shear Anchors	Bridge Engineering	Prestressed Concrete Standards Engineer	Tanarat Potisuk	(503) 986-3342	Measurement Payment			
00538	Crack Injecting Existing Bridges	Bridge Engineering	Bridge Operations and Standards Engineer	Tanarat Potisuk	(503) 986-3342	Measurement Payment			
00539	Concrete and Crack Sealing	Structure Services	Structural Materials Engineer	Bill Bennett	(503) 986-6628	Measurement Payment			Stand Alone Special Provision
00540	Structural Concrete	Bridge Engineering	BDDM Standards Engineer	Alex Lim	(503) 983-3402	Measurement Payment	Structure Services Engineer Construction QA Engineer	Scott Nelson Greg Stellmach	
00545	Reinforced Concrete Bridge End Panels	Bridge Engineering	BDDM Standards Engineer	Alex Lim	(503) 983-3402	Measurement Payment			

TECHNICAL RESOURCE LIST

UPDATED 08-17-2016		TECHNICAL RESOURCES					STAKEHOLDER (Include in correspondence with Technical Resource)		Questions? E-mail: ODOT SPECIFICATIONS
Section	Section Title	Primary Responsible Unit	Resource Position	Resource Name	Phone Number	Measurement and Payment Resource	Stakeholder Position	Stakeholder Name	Remarks
00550	Precast Prestressed Concrete Members	Bridge Engineering	Prestressed Concrete Standards Engineer	Tanarat Potisuk	(503) 986-3342	Measurement Payment	Structure Services Engineer	Scott Nelson	
00555	Post-Tensioning	Structure Services	Structural Materials Engineer	Bill Bennett	(503) 986-6628	Measurement Payment	Prestressed Concrete Standards Engineer	Tanarat Potisuk	
00556	Multi-Layer Polymer Concrete Overlays	Structure Services	Structural Materials Engineer	Bill Bennett	(503) 986-6628	Measurement Payment	Construction QA Engineer	Greg Stellmach	Stand Alone Special Provision
00557	Pre Mixed Polymer Concrete Overlays	Structure Services	Structural Materials Engineer	Bill Bennett	(503) 986-6628	Measurement Payment	BDDM Standards Engineer	Alex Lim	
00559	Silica Fume and Latex Modified Concrete Overlays	Structure Services	Structure Quality Engineer	Terry Thames	(503) 686-7598	Measurement Payment	Construction QA Engineer BDDM Standards Engineer	Greg Stellmach Alex Lim	Stand Alone Special Provision
00560	Structural Steel Bridges	Bridge Engineering	Steel Standards Engineer	Hormoz Seradj	(503) 986-3346	Measurement Payment			
00570	Timber Structures	Bridge Engineering	Structural Designer	Rebecca Burrow	(503) 986-4008	Measurement Payment			
00581	Bridge Drainage Systems	Bridge Engineering	BDDM Standards Engineer	Alex Lim	(503) 983-3402	Measurement Payment			
00582	Bridge Bearings	Bridge Engineering	Steel Standards Engineer	Hormoz Seradj	(503) 986-3346	Measurement Payment			
00583	Electrical Conduit in Structures	Bridge Engineering	Corrosion Engineer	Ray Bottenberg	(503) 986-3318	Measurement Payment			
00584	Elastomeric Concrete Nosing	Bridge Engineering	Steel Standards Engineer	Hormoz Seradj	(503) 986-3346	Measurement Payment			
00585	Expansion Joints	Bridge Engineering	Steel Standards Engineer	Hormoz Seradj	(503) 986-3346	Measurement Payment			
00586	Expansion Joints, Modular	Bridge Engineering	Steel Standards Engineer	Hormoz Seradj	(503) 986-3346	Measurement Payment			
00587	Bridge Rails	Bridge Engineering	BDDM Standards Engineer	Alex Lim	(503) 983-3402	Measurement Payment			
00589	Utility Attachments on Structures	Bridge Engineering	Corrosion Engineer	Ray Bottenberg	(503) 986-3318	Measurement Payment			Stand Alone Special Provision
00591	Spray Waterproofing Membrane	Structure Services	Structural Materials Engineer	Bill Bennett	(503) 986-6628	Measurement Payment	Bridge Operations and Standards Engineer	Tanarat Potisuk	
00593	Powder Coating Metal Structures	Structure Services	Structure Coatings Engineer	Joel Boothe	(971) 673-7003	Measurement Payment			
00594	Preparing and Coating Metal Structures	Structure Services	Structure Coatings Engineer	Joel Boothe	(971) 673-7003	Measurement Payment	Corrosion Engineer	Ray Bottenberg	
00595	Reinforced Concrete Box Culverts	Geo-Environmental	Retaining Wall Engineer	Sophie Brown	(503) 986-3778	Measurement Payment			
0A596	Mechanically Stabilized Earth Retaining Walls	Geo-Environmental	Retaining Wall Engineer	Sophie Brown	(503) 986-3778	Measurement Payment	Construction QA Engineer	Greg Stellmach	Stand Alone Special Provision
0B596	Prefabricated Modular Retaining Walls	Geo-Environmental	Retaining Wall Engineer	Sophie Brown	(503) 986-3778	Measurement Payment	Construction QA Engineer	Greg Stellmach	Stand Alone Special Provision
0C596	Cast-in-Place Retaining Walls	Geo-Environmental	Retaining Wall Engineer	Sophie Brown	(503) 986-3778	Measurement Payment	Construction QA Engineer	Greg Stellmach	Stand Alone Special Provision
00597	Sound Walls	Geo-Environmental	Retaining Wall Engineer	Sophie Brown	(503) 986-3778	Measurement Payment			
00599	Concrete Slope Paving	Bridge Engineering	BDDM Standards Engineer	Alex Lim	(503) 983-3402	Measurement Payment			
00610	Reconditioning Existing Roadway	Pavement Services	Pavement Design Engineer	Justin Moderie	(503) 986-3122	Measurement Payment			
00620	Cold Plane Pavement Removal	Pavement Services	Pavement Design Engineer	Justin Moderie	(503) 986-3122	Measurement Payment			
00622	Grinding Concrete Pavement	Pavement Services	Pavement Design Engineer	Justin Moderie	(503) 986-3122	Measurement Payment			
00635	Grid-Rolled Aggregate Subbase	Pavement Services	Pavement Design Engineer	Justin Moderie	(503) 986-3122	Measurement Payment	Construction QA Engineer	Greg Stellmach	

TECHNICAL RESOURCE LIST

UPDATED 08-17-2016		TECHNICAL RESOURCES					STAKEHOLDER (Include in correspondence with Technical Resource)		Questions? E-mail: ODOT SPECIFICATIONS
Section	Section Title	Primary Responsible Unit	Resource Position	Resource Name	Phone Number	Measurement and Payment Resource	Stakeholder Position	Stakeholder Name	Remarks
00640	Aggregate Base and Shoulders	Pavement Services	Pavement Design Engineer	Justin Moderie	(503) 986-3122	Measurement Payment	Construction QA Engineer	Greg Stellmach	
00641	Aggregate Subbase, Base and Shoulders	Pavement Services	Pavement Quality and Materials Engineer	Larry Ilg	(503) 986-3072	Measurement Payment	Construction QA Engineer	Greg Stellmach	
00645	Recycled Asphalt Products in Base	Pavement Services	Pavement Quality and Materials Engineer	Larry Ilg	(503) 986-3072	Measurement Payment	Construction QA Engineer	Greg Stellmach	Stand Alone Special Provision
00660	Lean Concrete Base	Pavement Services	Pavement Quality and Materials Engineer	Larry Ilg	(503) 986-3072	Measurement Payment			Stand Alone Unique Specification
00670	Concrete Pavement Undersealing	Pavement Services	Pavement Design Engineer	Justin Moderie	(503) 986-3122	Measurement Payment			Stand Alone Special Provision
00680	Stockpiled Aggregates	Geo-Environmental	Asst. Statewide Aggregate Resource Coordinator	Scott Billings	(541) 388-6097	Measurement Payment	Construction QA Engineer	Greg Stellmach	
00705	Emulsified Asphalt Prime Coat and Emulsified Asphalt Fog Coat	Pavement Services	Pavement Quality and Materials Engineer	Larry Ilg	(503) 986-3072	Measurement Payment	Construction QA Engineer	Greg Stellmach	
00706	Emulsified Asphalt Slurry Seal Surfacing	Pavement Services	Pavement Quality and Materials Engineer	Larry Ilg	(503) 986-3072	Measurement Payment	Construction QA Engineer	Greg Stellmach	
00710	Single Application Emulsified Asphalt Surface Treatment	Pavement Services	Pavement Quality and Materials Engineer	Larry Ilg	(503) 986-3072	Measurement Payment	Construction QA Engineer	Greg Stellmach	
00711	Pre-Coated Aggregate Asphalt Surface Treatment	Pavement Services	Pavement Quality and Materials Engineer	Larry Ilg	(503) 986-3072	Measurement Payment	Construction QA Engineer	Greg Stellmach	
00712	Dry Key Emulsified Asphalt Surface Treatment	Pavement Services	Pavement Quality and Materials Engineer	Larry Ilg	(503) 986-3072	Measurement Payment	Construction QA Engineer	Greg Stellmach	Stand Alone Unique Specification
00715	Multiple Application Emulsified Asphalt Surface Treatment	Pavement Services	Pavement Quality and Materials Engineer	Larry Ilg	(503) 986-3072	Measurement Payment	Construction QA Engineer	Greg Stellmach	
00718	Hydrated Lime Slurry in Cold In-Place Recycling	Pavement Services	Pavement Quality and Materials Engineer	Larry Ilg	(503) 986-3072	Measurement Payment			Stand Alone Unique Specification
00719	Pre-Recycle Lime Treatment	Pavement Services	Pavement Quality and Materials Engineer	Larry Ilg	(503) 986-3072	Measurement Payment			Stand Alone Unique Specification
00720	Cold In-Place Recycled Asphalt Concrete Pavement	Pavement Services	Pavement Quality and Materials Engineer	Larry Ilg	(503) 986-3072	Measurement Payment	Construction QA Engineer	Greg Stellmach	Stand Alone Unique Specification
00721	Cold Recycled Emulsified Asphalt Concrete Pavement	Pavement Services	Pavement Quality and Materials Engineer	Larry Ilg	(503) 986-3072	Measurement Payment	Construction QA Engineer	Greg Stellmach	Stand Alone Unique Specification
00725	Hot In-Place Recycled Asphalt Concrete Pavement	Pavement Services	Pavement Quality and Materials Engineer	Larry Ilg	(503) 986-3072	Measurement Payment	Construction QA Engineer	Greg Stellmach	Stand Alone Unique Specification
00730	Emulsified Asphalt Tack Coat	Pavement Services	Pavement Quality and Materials Engineer	Larry Ilg	(503) 986-3072	Measurement Payment	Construction QA Engineer	Greg Stellmach	
00735	Emulsified Asphalt Concrete Pavement	Pavement Services	Pavement Quality and Materials Engineer	Larry Ilg	(503) 986-3072	Measurement Payment	Construction QA Engineer	Greg Stellmach	
00738	Safety Edge	Roadway Engineering	Standards Engineer	Dave Polly	(503) 986-3738	Measurement Payment			Stand Alone Special Provision
00740	Commercial Asphalt Concrete Pavement (CACP)	Pavement Services	Pavement Quality and Materials Engineer	Larry Ilg	(503) 986-3072	Measurement Payment	Construction QA Engineer	Greg Stellmach	
00743	Porous Asphalt Concrete (PAC)	Pavement Services	Pavement Quality and Materials Engineer	Larry Ilg	(503) 986-3072	Measurement Payment	Construction QA Engineer	Greg Stellmach	
00744	Asphalt Concrete Pavement	Pavement Services	Pavement Quality and Materials Engineer	Larry Ilg	(503) 986-3072	Measurement Payment	Construction QA Engineer	Greg Stellmach	
00745	Asphalt Concrete Pavement - Staistical Analysis	Pavement Services	Pavement Quality and Materials Engineer	Larry Ilg	(503) 986-3072	Measurement Payment	Construction QA Engineer	Greg Stellmach	
00746	Crack Sealing Flexible Pavements	Pavement Services	Pavement Quality and Materials Engineer	Larry Ilg	(503) 986-3072	Measurement Payment			
00748	Asphalt Concrete Pavement Repair	Pavement Services	Pavement Design Engineer	Justin Moderie	(503) 986-3122	Measurement Payment	Construction QA Engineer	Greg Stellmach	
00749	Miscellaneous Asphalt Concrete Structures	Pavement Services	Pavement Quality and Materials Engineer	Larry Ilg	(503) 986-3072	Measurement Payment			
00754	Plain Concrete Pavement Repair	Pavement Services	Pavement Design Engineer	Justin Moderie	(503) 986-3122	Measurement Payment			
00755	Continuously Reinforced Concrete Pavement	Pavement Services	Pavement Design Engineer	Justin Moderie	(503) 986-3122	Measurement Payment	Construction QA Engineer	Greg Stellmach	

TECHNICAL RESOURCE LIST

UPDATED 08-17-2016		TECHNICAL RESOURCES					STAKEHOLDER (Include in correspondence with Technical Resource)		Questions? E-mail: ODOT SPECIFICATIONS
Section	Section Title	Primary Responsible Unit	Resource Position	Resource Name	Phone Number	Measurement and Payment Resource	Stakeholder Position	Stakeholder Name	Remarks
00756	Plain Concrete Pavement	Pavement Services	Pavement Design Engineer	Justin Moderie	(503) 986-3122	Measurement Payment	Construction QA Engineer	Greg Stellmach	
00758	Reinforced Concrete Pavement Repair	Pavement Services	Pavement Design Engineer	Justin Moderie	(503) 986-3122	Measurement Payment	Construction QA Engineer	Greg Stellmach	
00759	Miscellaneous Portland Cement Concrete Structures	Roadway Engineering	Standards Engineer	Dave Polly	(503) 986-3738	Measurement Payment			
00760	Unit Pavers	Roadway Engineering	Standards Engineer	Dave Polly	(503) 986-3738	Measurement Payment			Stand Alone Special Provision
00810	Metal Guardrail	Roadway Engineering	Roadside Design Engineer	Tracy Harris	(503) 986-3727	Measurement Payment			
00811	Cable Barrier	Roadway Engineering	Roadside Design Engineer	Tracy Harris	(503) 986-3727	Measurement Payment			
00812	Adjusting and Repairing Guardrail	Roadway Engineering	Roadside Design Engineer	Tracy Harris	(503) 986-3727	Measurement Payment			
00813	Steel Backed Timber Guardrail	Roadway Engineering	Roadside Design Engineer	Tracy Harris	(503) 986-3727	Measurement Payment			Stand Alone Special Provision
00815	Bollards	Roadway Engineering	Standards Engineer	Dave Polly	(503) 986-3738	Measurement Payment			
00820	Concrete Barrier	Roadway Engineering	Roadside Design Engineer	Tracy Harris	(503) 986-3727	Measurement Payment			
00822	Glare Shields	Roadway Engineering	Roadside Design Engineer	Tracy Harris	(503) 986-3727	Measurement Payment			
00830	Impact Attenuators	Roadway Engineering	Roadside Design Engineer	Tracy Harris	(503) 986-3727	Measurement Payment			
00840	Delineators and Milepost Marker Posts	Traffic Standards	Traffic Design Specialist	Marty Klug	(503) 986-3586	Measurement Payment			
00842	Facility Identification Markers	Geo-Environmental	Culvert Design Engineer	Robert Trevis	(503) 986-3860	Measurement Payment			Culvert Drainage Markers
		Bridge Engineering	Bridge Operations and Standards Engineer	Craig Shike	(503) 986-3323				Bridge Markers
		Geo-Environmental	Sr. Hydraulic Engineer	Alvin Shoblom	(503) 986-3365				Stormwater Control Markers
00850	Common Provisions for Pavement Markings	Traffic Standards	Traffic Devices Engineer	Eric Leaming	(503) 986-3610	N/A	Field Operations Specialist	Joel Fry	
00851	Pavement Marking Removal	Traffic Standards	Traffic Devices Engineer	Eric Leaming	(503) 986-3610	Measurement Payment			
00855	Pavement Markers	Traffic Standards	Traffic Devices Engineer	Eric Leaming	(503) 986-3610	Measurement Payment	Product Evaluation Coordinator	Dean Chess	
00856	Surface Mounted Tubular Markers	Traffic Standards	Traffic Devices Engineer	Eric Leaming	(503) 986-3610	Measurement Payment			
00857	Rumble Strips	Traffic Standards	Traffic Devices Engineer	Eric Leaming	(503) 986-3610	Measurement Payment			
00860	Longitudinal Pavement Markings - Paint	Traffic Standards	Traffic Devices Engineer	Eric Leaming	(503) 986-3610	Measurement Payment	Construction QA Engineer	Greg Stellmach	
00865	Longitudinal Pavement Markings - Durable	Traffic Standards	Traffic Devices Engineer	Eric Leaming	(503) 986-3610	Measurement Payment	Construction QA Engineer	Greg Stellmach	
00866	Longitudinal Pavement Markings - High Performance	Traffic Standards	Traffic Devices Engineer	Eric Leaming	(503) 986-3610	Measurement Payment	Construction QA Engineer	Greg Stellmach	
00867	Transverse Pavement Markings - Legends and Bars	Traffic Standards	Traffic Devices Engineer	Eric Leaming	(503) 986-3610	Measurement Payment	Construction QA Engineer	Greg Stellmach	
00902	Crosswalk Closure Barricades	Traffic Standards	Traffic Signal Engineer	Scott Cramer	(503) 986-3596	Measurement Payment			Stand Alone Special Provision
00905	Removal and Reinstallation of Existing Signs	Traffic Standards	Sign Engineer	Heidi Shoblom	(503) 986-3603	Measurement Payment			
00910	Wood Sign Posts	Traffic Standards	Traffic Structures Engineer	Scott Jollo	(503) 986-3069	Measurement Payment			
00920	Sign Support Footings	Traffic Standards	Traffic Structures Engineer	Scott Jollo	(503) 986-3069	Measurement Payment			

TECHNICAL RESOURCE LIST

UPDATED 08-17-2016		TECHNICAL RESOURCES					STAKEHOLDER (Include in correspondence with Technical Resource)		Questions? E-mail: ODOT SPECIFICATIONS
Section	Section Title	Primary Responsible Unit	Resource Position	Resource Name	Phone Number	Measurement and Payment Resource	Stakeholder Position	Stakeholder Name	Remarks
00921	Major Sign Support Drilled Shafts	Traffic Standards	Traffic Structures Engineer	Scott Jollo	(503) 986-3069	Measurement Payment			
00930	Metal Sign Supports	Traffic Standards	Traffic Structures Engineer	Scott Jollo	(503) 986-3069	Measurement Payment			
00940	Signs	Traffic Standards	Sign Engineer	Heidi Shoblom	(503) 986-3603	Measurement Payment			
00941	Sign Covers	Traffic Standards	Sign Engineer	Heidi Shoblom	(503) 986-3603	Measurement Payment			
00942	Permanent Barricades	Roadway Engineering	Roadside Design Engineer	Tracy Harris	(503) 986-3727	Measurement Payment			Stand Alone Unique Specification
00950	Removal of Electrical Systems	Traffic Standards	Traffic Signal Engineer	Scott Cramer	(503) 986-3596	Measurement Payment			
00960	Common Provisions for Electrical Systems	Traffic Standards	Traffic Signal Engineer	Scott Cramer	(503) 986-3596	N/A			
00962	Metal Illumination and Traffic Signal Supports	Traffic Standards	Traffic Structures Engineer	Scott Jollo	(503) 986-3069	Measurement Payment			
00963	Signal Support Drilled Shafts	Traffic Standards	Traffic Structures Engineer	Scott Jollo	(503) 986-3069	Measurement Payment			
00965	Camera Poles and Foundations	Traffic Standards	Traffic Structures Engineer	Scott Jollo	(503) 986-3069	Measurement Payment			Stand Alone Special Provision
00970	Highway Illumination	Traffic Standards	Illumination Engineer	Ernest Kim	(503) 986-3587	Measurement Payment			
00980	ITS - Structural Supports and Foundations*	ITS	Sr. ITS Engineer	Ron Blacketer	(503) 986-3588	Measurement Payment			* 00980 is not a Standard Specification or published Boilerplate and may vary on a project-by-project basis
00981	ITS - Structural Supports and Foundations*	ITS	Sr. ITS Engineer	Ron Blacketer	(503) 986-3588	Measurement Payment			* 00981 is not a Standard Specification or published Boilerplate and may vary on a project-by-project basis
00982	ITS - Structural Supports and Foundations*	ITS	Sr. ITS Engineer	Ron Blacketer	(503) 986-3588	Measurement Payment			* 00982 is not a Standard Specification or published Boilerplate and may vary on a project-by-project basis
00983	ITS - Structural Supports and Foundations*	ITS	Sr. ITS Engineer	Ron Blacketer	(503) 986-3588	Measurement Payment			* 00983 is not a Standard Specification or published Boilerplate and may vary on a project-by-project basis
00984	ITS - Structural Supports and Foundations*	ITS	Sr. ITS Engineer	Ron Blacketer	(503) 986-3588	Measurement Payment			* 00984 is not a Standard Specification or published Boilerplate and may vary on a project-by-project basis
00985	ITS - Electrical Components and Systems*	ITS	ITS Standards Engineer	Doug Spencer	(541) 747-1276	Measurement Payment			* 00985 is not a Standard Specification or published Boilerplate and may vary on a project-by-project basis
00986	ITS - Electrical Components and Systems*	ITS	ITS Standards Engineer	Doug Spencer	(541) 747-1276	Measurement Payment			* 00986 is not a Standard Specification or published Boilerplate and may vary on a project-by-project basis
00987	ITS - Electrical Components and Systems*	ITS	ITS Standards Engineer	Doug Spencer	(541) 747-1276	Measurement Payment			* 00987 is not a Standard Specification or published Boilerplate and may vary on a project-by-project basis
00988	ITS - Electrical Components and Systems*	ITS	ITS Standards Engineer	Doug Spencer	(541) 747-1276	Measurement Payment			* 00988 is not a Standard Specification or published Boilerplate and may vary on a project-by-project basis
00989	ITS - Electrical Components and Systems*	ITS	ITS Standards Engineer	Doug Spencer	(541) 747-1276	Measurement Payment			* 00989 is not a Standard Specification or published Boilerplate and may vary on a project-by project basis
00990	Traffic Signals	Traffic Standards	Traffic Signal Engineer	Scott Cramer	(503) 986-3596	Measurement Payment			
01010	Stormwater Control, Water Quality Structures	Geo-Environmental	Sr. Hydraulic Engineer	Alvin Shoblom	(503) 986-3365	Measurement Payment			Stand Alone Special Provision
01011	Stormwater Control, Ponds	Geo-Environmental	Sr. Hydraulic Engineer	Alvin Shoblom	(503) 986-3365	Measurement Payment			Stand Alone Special Provision
01012	Stormwater Control, Water Quality Biofiltration Swales	Geo-Environmental	Sr. Hydraulic Engineer	Alvin Shoblom	(503) 986-3365	Measurement Payment			Stand Alone Special Provision

TECHNICAL RESOURCE LIST

UPDATED 08-17-2016		TECHNICAL RESOURCES					STAKEHOLDER (Include in correspondence with Technical Resource)		Questions? E-mail: ODOT SPECIFICATIONS
Section	Section Title	Primary Responsible Unit	Resource Position	Resource Name	Phone Number	Measurement and Payment Resource	Stakeholder Position	Stakeholder Name	Remarks
01013	Stormwater Control, Water Quality Bioslope	Geo-Environmental	Sr. Hydraulic Engineer	Alvin Shoblom	(503) 986-3365	Measurement Payment			Stand Alone Special Provision
01014	Stormwater Control, Water Quality Filter Strip	Geo-Environmental	Sr. Hydraulic Engineer	Alvin Shoblom	(503) 986-3365	Measurement Payment			Stand Alone Special Provision
01030	Seeding	Geo-Environmental	Statewide Program Coord. for Roadside Development and Erosion Control	Bob Marshall	(503) 986-3512	Measurement Payment			
01040	Planting	Geo-Environmental	Statewide Program Coord. for Roadside Development and Erosion Control	Bob Marshall	(503) 986-3512	Measurement Payment			
01050	Fences	Roadway Engineering	Standards Engineer	Dave Polly	(503) 986-3738	Measurement Payment	Bridge Operations and Standards Engineer	Craig Shike	
01060	Metal Cattle Guards	Bridge Engineering	BDDM Standards Engineer	Alex Lim	(503) 983-3402	Measurement Payment			Stand Alone Special Provision
01070	Mailbox Supports	Roadway Engineering	Standards Engineer	Dave Polly	(503) 986-3738	Measurement Payment			
01090	Gravel Beds and Blankets	Geo-Environmental	Erosion Control	Raghu Namburi	(503) 986-3551	Measurement Payment			
01091	Waterway Enhancements	Geo-Environmental	Water Quality/Resources Program Coordinator	William Fletcher	(503) 986-3509	Measurement Payment			Stand Alone Special Provision
01095	Site Furnishings	Roadway Engineering	Specifications Engineer	Dan Anderson	(503) 986-3777	Measurement Payment			Stand Alone Special Provision
01120	Irrigation Systems	Roadway Engineering	Standards Engineer	Dave Polly	(503) 986-3738	Measurement Payment			
01140	Potable Water Pipe and Fittings	Roadway Engineering	Standards Engineer	Dave Polly	(503) 986-3738	Measurement Payment			
01150	Potable Water Valves	Roadway Engineering	Standards Engineer	Dave Polly	(503) 986-3738	Measurement Payment			
01160	Hydrants and Appurtenances	Roadway Engineering	Standards Engineer	Dave Polly	(503) 986-3738	Measurement Payment			
01170	Potable Water Service Connections, 2 Inch and Smaller	Roadway Engineering	Standards Engineer	Dave Polly	(503) 986-3738	Measurement Payment			
02001	Concrete	Structure Services	Structural Materials Engineer	Bill Bennett	(503) 986-6628	N/A	Construction QA Engineer	Greg Stellmach	
02010	Portland Cement	Structure Services	Structural Materials Engineer	Bill Bennett	(503) 986-6628	N/A			
02015	Portland Cement Concrete Repair Material	Structure Services	Structural Materials Engineer	Bill Bennett	(503) 986-6628	N/A			
02020	Water	Structure Services	Structural Materials Engineer	Bill Bennett	(503) 986-6628	N/A			
02030	Modifiers	Structure Services	Structural Materials Engineer	Bill Bennett	(503) 986-6628	N/A			
02040	Chemical Admixtures	Structure Services	Structural Materials Engineer	Bill Bennett	(503) 986-6628	N/A			
02045	Synthetic Fiber Reinforcing for Concrete	Structure Services	Structural Materials Engineer	Bill Bennett	(503) 986-6628	N/A			
02050	Curing Materials	Structure Services	Structural Materials Engineer	Bill Bennett	(503) 986-6628	N/A			
02055	Concrete Surface Retarders	Structure Services	Structural Materials Engineer	Bill Bennett	(503) 986-6628	N/A			
02060	Concrete and Crack Sealers	Structure Services	Structural Materials Engineer	Bill Bennett	(503) 986-6628	N/A			
02070	Bonding Agents	Structure Services	Structural Materials Engineer	Bill Bennett	(503) 986-6628	N/A			
02080	Grout	Structure Services	Structural Materials Engineer	Bill Bennett	(503) 986-6628	N/A			
02090	Lime	Structure Services	Structural Materials Engineer	Bill Bennett	(503) 986-6628	N/A			

TECHNICAL RESOURCE LIST

UPDATED 08-17-2016		TECHNICAL RESOURCES					STAKEHOLDER (Include in correspondence with Technical Resource)		Questions? E-mail: ODOT SPECIFICATIONS
Section	Section Title	Primary Responsible Unit	Resource Position	Resource Name	Phone Number	Measurement and Payment Resource	Stakeholder Position	Stakeholder Name	Remarks
02110	Posts, Blocks, and Braces	Structure Services	Structural Materials Engineer	Bill Bennett	(503) 986-6628	N/A			
02120	Poles and Piling	Structure Services	Structural Materials Engineer	Bill Bennett	(503) 986-6628	N/A	Senior Bridge Geotechnical Engineer	Susan Ortiz	
02130	Timber and Lumber	Structure Services	Structural Materials Engineer	Bill Bennett	(503) 986-6628	N/A	Structural Design Engineer	Mats Halvardson	
02140	Glued Laminated Timber Members	Structure Services	Structural Materials Engineer	Bill Bennett	(503) 986-6628	N/A	Structural Design Engineer	Mats Halvardson	
02150	Lumber and Timber Connectors	Structure Services	Structural Materials Engineer	Bill Bennett	(503) 986-6628	N/A	Structural Design Engineer	Mats Halvardson	
02190	Preservative Treatment of Timber	Structure Services	Structural Materials Engineer	Bill Bennett	(503) 986-6628	N/A			
02210	Coating Materials for Timber and Concrete	Structure Services	Structure Coatings Engineer	Joel Boothe	(971) 673-7003	N/A	Corrosion Engineer	Ray Bottenberg	
02320	Geosynthetics	Geo-Environmental	Geotechnical Engineer	Jon Guido	(503) 986-3993	N/A	Pavement Design Engineer	Justin Moderie	
02340	Rock Gabion Baskets	Geo-Environmental	Geotechnical Engineer	Jon Guido	(503) 986-3993	N/A			
02350	Metal Bin Retaining Walls	Geo-Environmental	Geotechnical Engineer	Jon Guido	(503) 986-3993	N/A			
02410	Concrete Pipe	Roadway Engineering	Standards Engineer	Dave Polly	(503) 986-3738	N/A			
02415	Plastic Pipe	Roadway Engineering	Standards Engineer	Dave Polly	(503) 986-3738	N/A			
02420	Metal Pipe	Roadway Engineering	Standards Engineer	Dave Polly	(503) 986-3738	N/A			
02430	Structural Plate Pipe	Geo-Environmental	Culvert Design Engineer	Rob Trevis	(503) 986-3860	N/A			
02440	Joint Materials	Structure Services	Structural Materials Engineer	Bill Bennett	(503) 986-6628	N/A			
02450	Manhole and Inlet Materials	Roadway Engineering	Standards Engineer	Dave Polly	(503) 986-3738	N/A			
02470	Potable Water Pipe Materials	Roadway Engineering	Standards Engineer	Dave Polly	(503) 986-3738	N/A			
02475	Potable Water Fitting Materials	Roadway Engineering	Standards Engineer	Dave Polly	(503) 986-3738	N/A			
02480	Potable Water Valve Materials	Roadway Engineering	Standards Engineer	Dave Polly	(503) 986-3738	N/A			
02485	Hydrant and Appurtenance Materials	Roadway Engineering	Standards Engineer	Dave Polly	(503) 986-3738	N/A			
02490	Potable Water Service Connection Materials, 2 Inch and Smaller	Roadway Engineering	Standards Engineer	Dave Polly	(503) 986-3738	N/A			
02510	Reinforcement	Structure Services	Structural Materials Engineer	Bill Bennett	(503) 986-6628	N/A			
02515	Prestressing Reinforcement	Structure Services	Structural Materials Engineer	Bill Bennett	(503) 986-6628	N/A			
02520	Steel and Concrete Piles	Structure Services	Structural Materials Engineer	Bill Bennett	(503) 986-6628	N/A	Senior Bridge Geotechnical Engineer	Susan Ortiz	
02530	Structural Steel	Structure Services	Structural Materials Engineer	Bill Bennett	(503) 986-6628	N/A			
02540	Forgings, Shafting, Castings and Nonferrous Materials	Structure Services	Structural Materials Engineer	Bill Bennett	(503) 986-6628	N/A			
02560	Fasteners	Structure Services	Structural Materials Engineer	Bill Bennett	(503) 986-6628	N/A			
02570	Composite Bearings	Structure Services	Structural Materials Engineer	Bill Bennett	(503) 986-6628	N/A	Steel Standards Engineer	Hormoz Seradj	
02571	Elastomeric Bearing Pads	Structure Services	Structural Materials Engineer	Bill Bennett	(503) 986-6628	N/A	Steel Standards Engineer	Hormoz Seradj	

TECHNICAL RESOURCE LIST									
UPDATED 08-17-2016		TECHNICAL RESOURCES					STAKEHOLDER (Include in correspondence with Technical Resource)		Questions? E-mail: ODOT SPECIFICATIONS
Section	Section Title	Primary Responsible Unit	Resource Position	Resource Name	Phone Number	Measurement and Payment Resource	Stakeholder Position	Stakeholder Name	Remarks
02610	Special Filter Material	Roadway Engineering	Standards Engineer	Dave Polly	(503) 986-3738	N/A			
02630	Base Aggregate	Pavement Services	Pavement Quality and Materials Engineer	Larry Ilg	(503) 986-3072	N/A	Construction QA Engineer	Greg Stellmach	
02640	Shoulder Aggregate	Pavement Services	Pavement Quality and Materials Engineer	Larry Ilg	(503) 986-3072	N/A	Construction QA Engineer	Greg Stellmach	
02690	PCC Aggregates	Structure Services	Structural Materials Engineer	Bill Bennett	(503) 986-6628	N/A	Construction QA Engineer	Greg Stellmach	
02695	Reclaimed Glass (Mixed Waste Cullet)	Structure Services	Structural Materials Engineer	Bill Bennett	(503) 986-6628	N/A			
02810	Bridge Rail	Structure Services	Structural Materials Engineer	Bill Bennett	(503) 986-6628	N/A	BDDM Standards Engineer	Alex Lim	
02820	Metal Guardrail	Structure Services	Structural Materials Engineer	Bill Bennett	(503) 986-6628	N/A			
02830	Metal Handrail	Roadway Engineering	Standards Engineer	Dave Polly	(503) 986-3738	N/A			
02910	Sign Materials	Traffic Standards	Sign Engineer	Heidi Shoblom	(503) 986-3603	N/A			
02920	Common Electrical Materials	Traffic Standards	Traffic Signal Engineer	Scott Cramer	(503) 986-3596	N/A			
02925	Traffic Signal Materials	Traffic Standards	Traffic Signal Engineer	Scott Cramer	(503) 986-3596	N/A			
02926	Highway Illumination Materials	Traffic Standards	Illumination Engineer	Ernest Kim	(503) 986-3587	N/A			
03010	Fencing Materials	Structure Services	Structural Materials Engineer	Bill Bennett	(503) 986-6628	N/A	BDDM Standards Engineer	Alex Lim	
03020	Erosion Materials	Geo-Environmental	Statewide Program Coord. for Roadside Development and Erosion Control	Bob Marshall	(503) 986-3512	N/A			

Inspector's Role

Definitions (00110.20)

Engineer - The Chief Engineer of the Agency acting either directly or through authorized representative. If the Agency has not designated a Chief Engineer, this term denotes the person responsible for administering its public works program.

Project Manager - The Engineer's representative who directly supervises the engineering and administration of a Contract.

Inspector - The representative of the Engineer authorized to inspect and report on Contract performance.

The Role of the Inspector

The inspector's role is to see that the construction project produces the results called for in the contract.

Inspector's Authority

Authority of the Engineer (00150.00)

- The Engineer has full authority over the work.
- The Contractor shall perform all work to the complete satisfaction of the Engineer.
- The Engineer's determination shall be final on all matters.

Project Manager's Authority (00150.01)

- The Engineer may designate a Project Manager as its representative on the Project with authority to enforce the provisions of the Contract.
- The Project Manager shall have the authority to appoint Inspectors to assist in the administration of the Contract.

Inspector's Authority (00150.02)

- Inspect Work performed and Materials furnished
- Orally reject defective Materials and to confirm such rejection in writing;
- By oral order, temporarily suspend the Work for improper prosecution pending the Engineer's decision; and
- Exercise additional delegated authority.

Know When to Reject

Warping 3/8" plywood

Spec had said should be sufficiently rigid without distortion or warping (540.45)

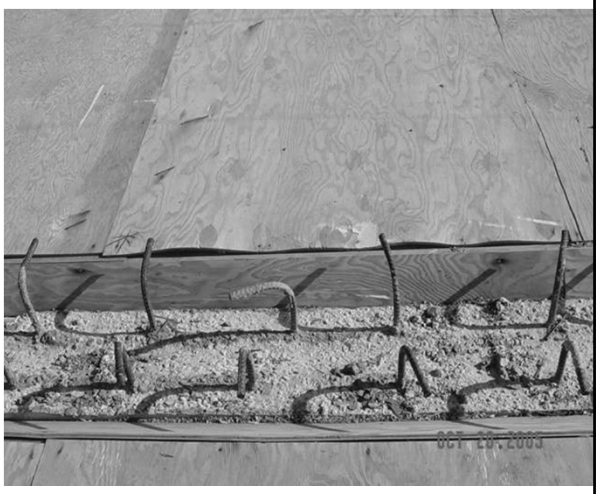

Warping 3/8” Plywood

Bottom of Deck in Box Girder

Bottom of Deck in Box Girder

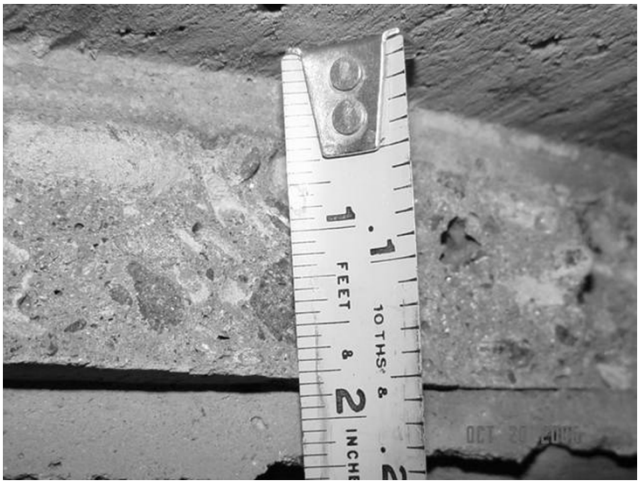

Inspectors are <u>NOT</u> authorized to: (00150.02)

- Accept Work or Materials
- Alter or waive provisions of the Contract
- Give instructions or advice inconsistent with the contract documents

Acceptability of Materials and Work (00150.25)

If the Engineer determines that the materials furnished or the work performed are not in close conformance with the plans and specifications, the Engineer may:

- Reject the materials or work and order the Contractor, at the Contractor's expense, to remove it, or
- Accept the Materials or Work as suitable for the intended purpose, and adjust the amount paid to account for diminished value to the Agency.

Acceptability of Materials and Work (00150.25)

The Engineer's decisions concerning acceptability of materials or work will be final.

Introduction to Structures

Basic Bridge Types

There are generally 4 types of bridges:

- Beam Bridge
- Arch Bridge
- Suspension Bridge
- Cable Stayed Bridge

Basic Bridge Types

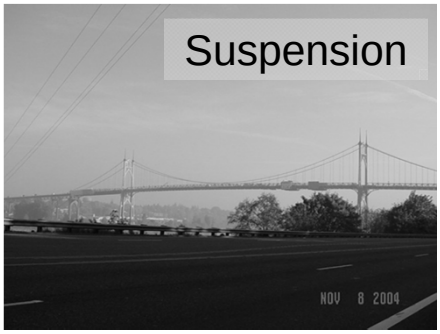

Beam Bridge

Common Beam Bridge Types:

- PCPS concrete Slab/Box bridge
- PCPS concrete girder bridge (Bulb-I or Bulb-T)
- CIP Concrete Slab bridge
- CIP Post-Tensioned Box Girder bridge
- Steel plate girder bridge
- Truss bridge

Beam Bridge Cross-Sections

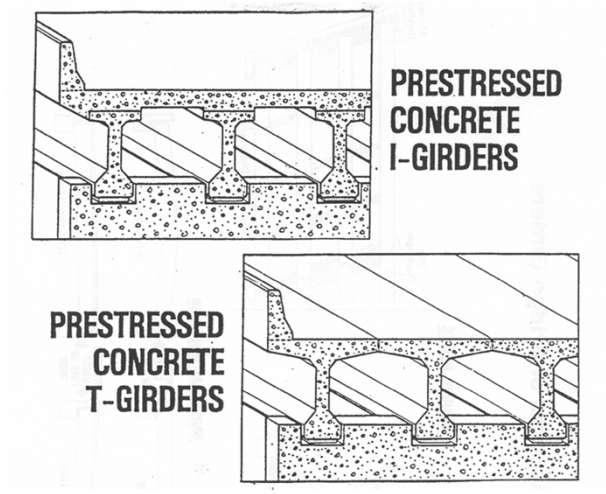

Beam Bridge Cross-Sections

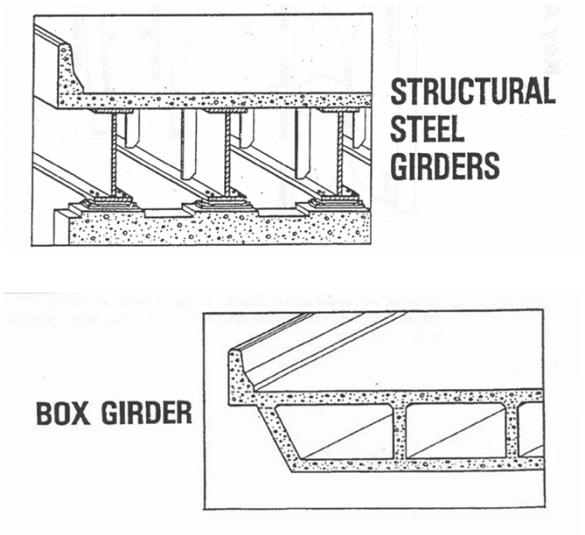

Truss Bridge Types

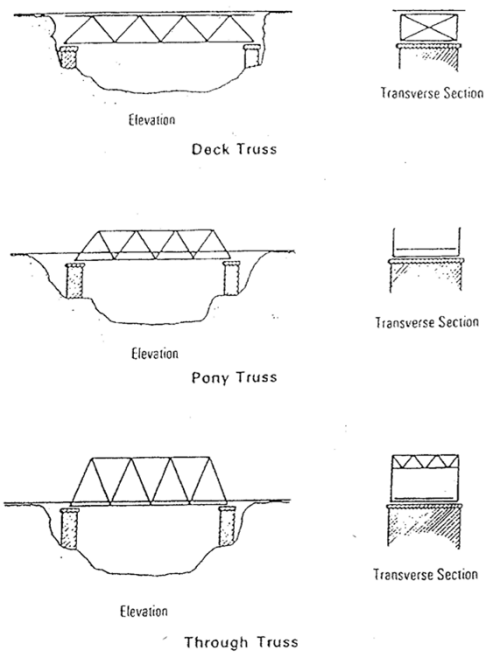

Precast, Prestressed, Concrete Slab

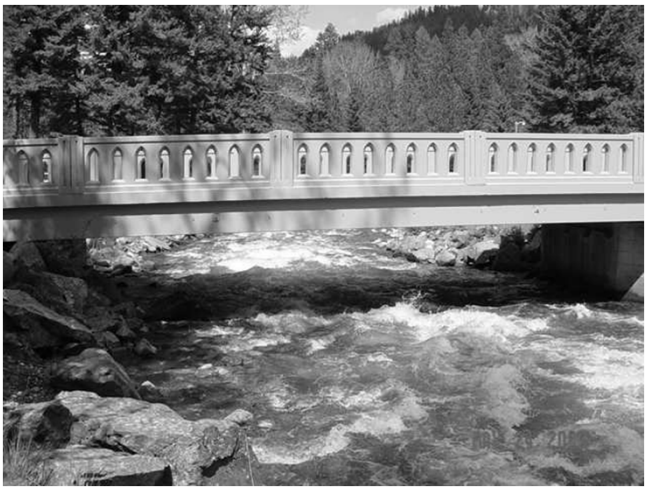

Precast, Prestressed, Concrete Box Beam

Precast, Prestressed, Concrete Girders

Steel Plate Girder

Post-tensioned Box Girder

Through Truss

Deck Truss

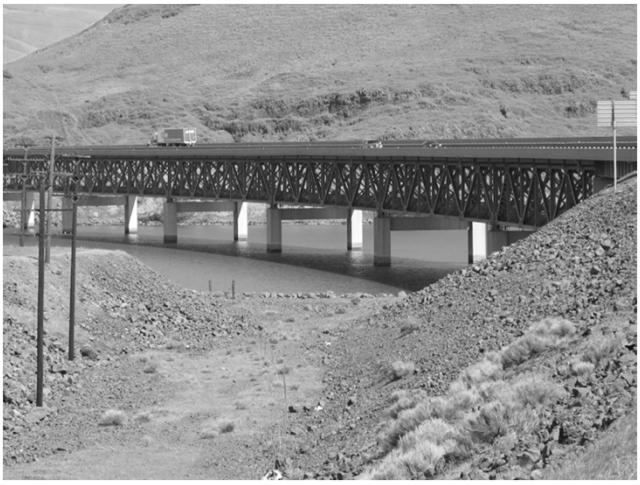

Arch

Suspension

Cable Stayed

Span Lengths

Structure Type	Span Range
PCPS Slabs	70 feet
PCPS Box Beams	120 feet
CIP Concrete Slabs	50-66-50 feet (3 Span)
Precast Deck Girder	130 feet
PCPS Bulb-I & T Girders	180 feet +

Span Lengths

Structure Type	Span Range
CIP PT Box Girder	300 feet
Steel Plate girder	250 feet
Steel truss	*

* Normally used for longer, multi-span continuous bridges.

Part of Structures

Bridges can be divided into Two Parts.

- Substructure
- Superstructure

Substructure

A bridge substructure includes:

- Foundations
  (Spread Footing, Pile Footing, Drilled Shafts)
- Abutments, Pile Caps
- Piers, Columns
- Crossbeams
- Beamseats

Superstructure

A bridge superstructure includes:

- Bearing devices on the beam seats
- Girders
- Diaphragms
- Deck
- Other above-deck items such as curbs & rails

Bridge Terminology

Bridge Terminology

Refer to the Glossary in Appendix A for additional bridge terminology.

BRIDGE TERMINOLOGY EXERCISE

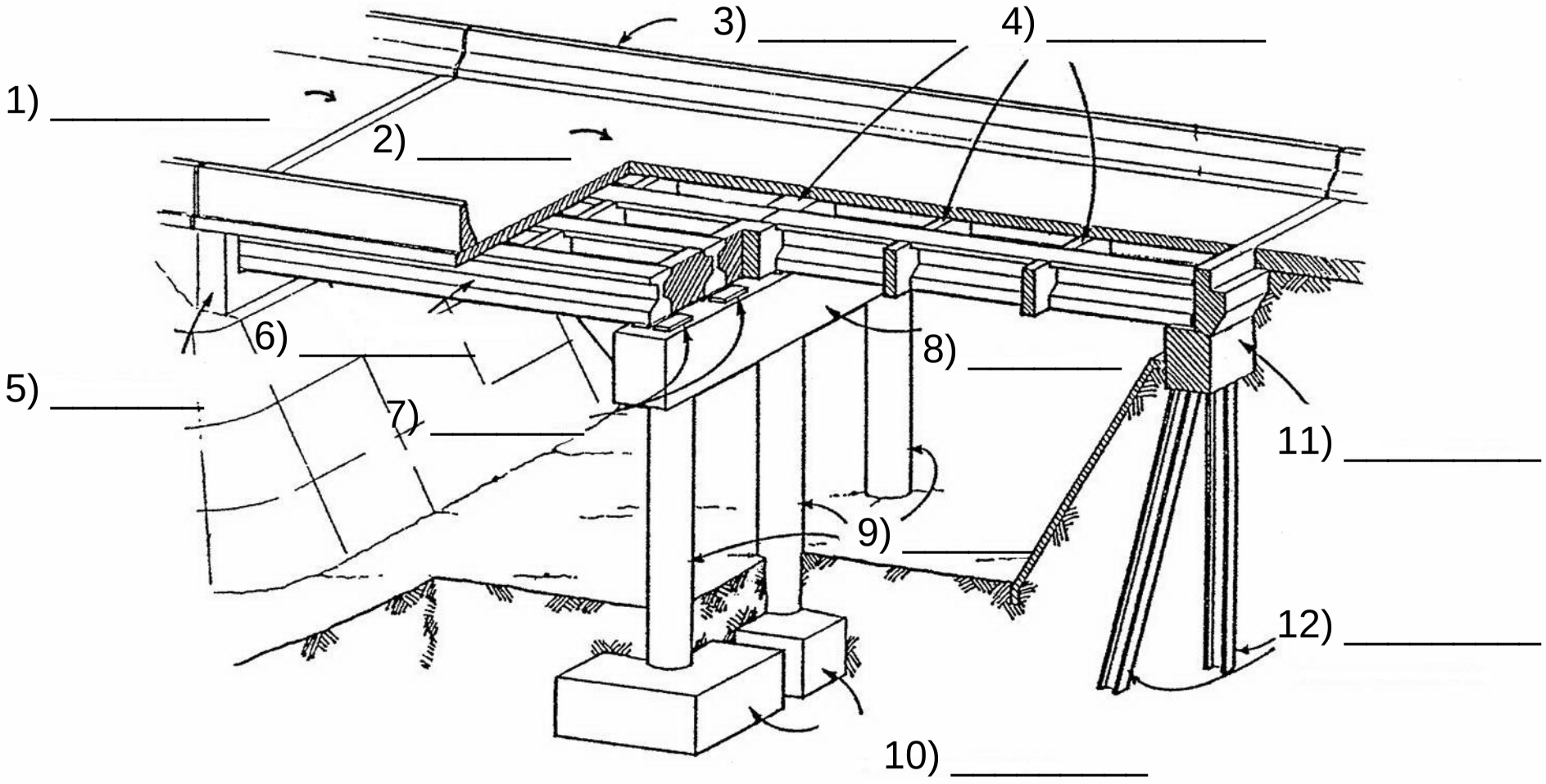

TIMBER STRUCTURE TERMINOLOGY

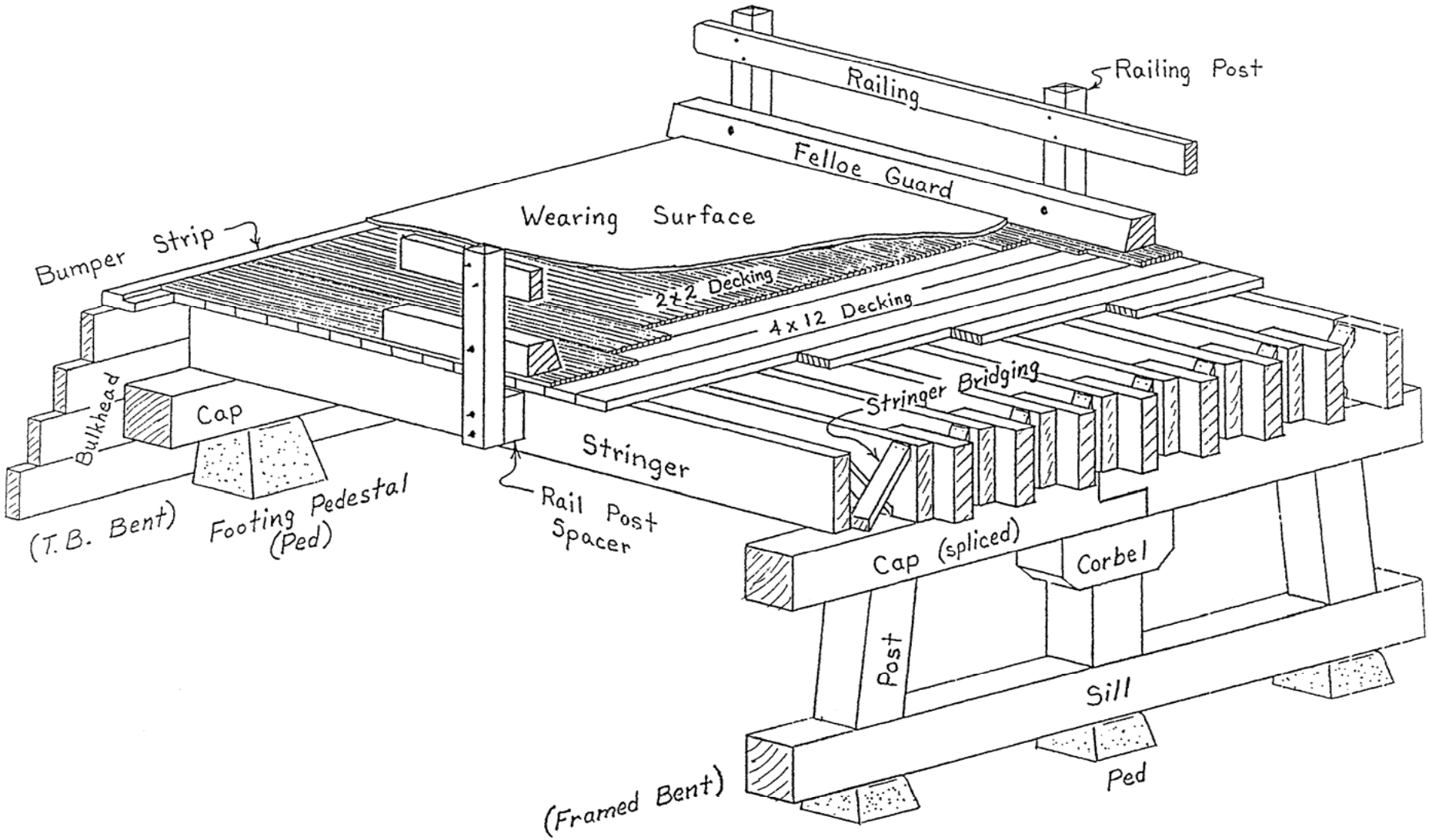

TRUSS BRIDGE TERMINOLOGY

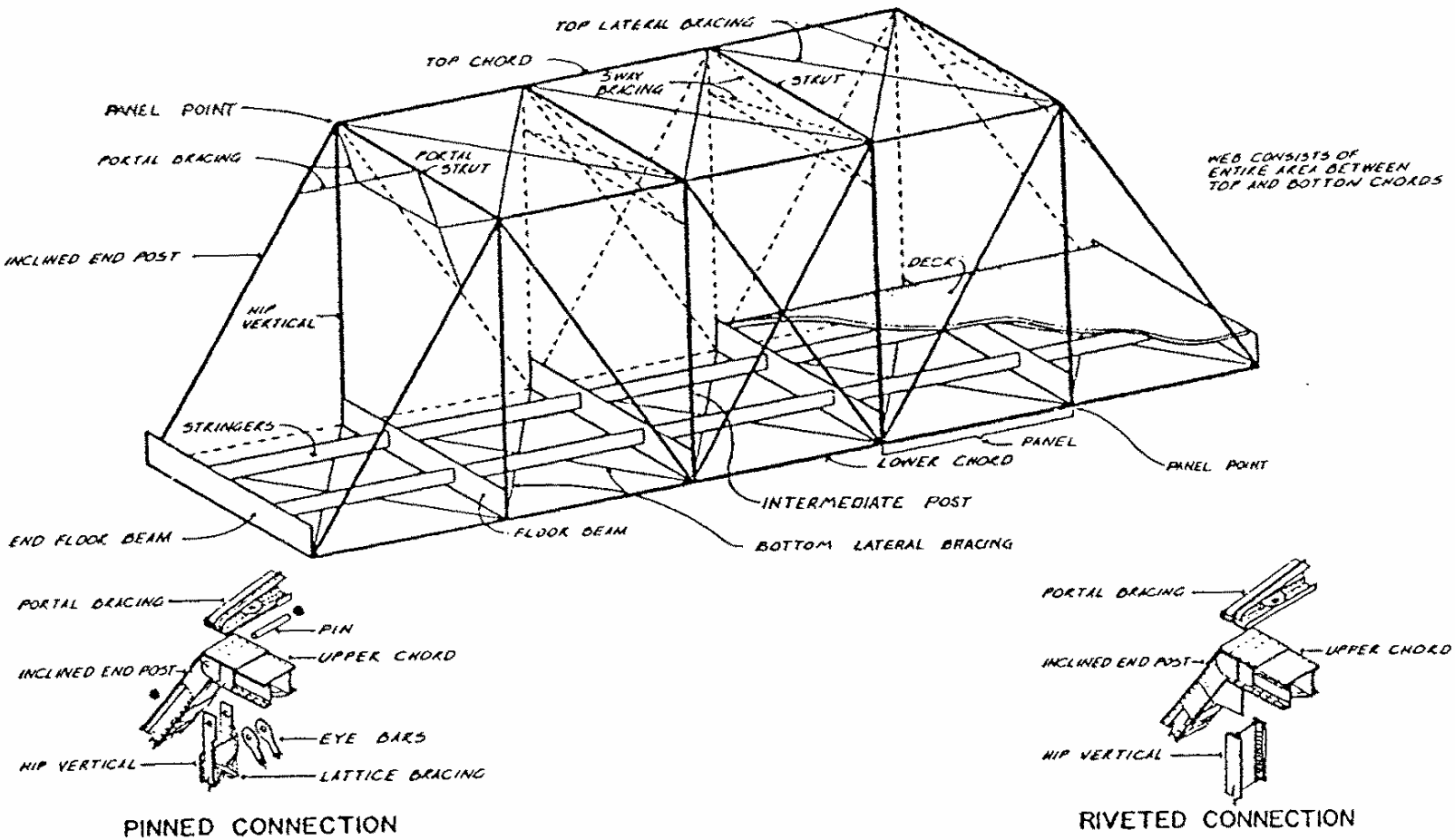

Representative truss nomenclature. (Source: Historic American Engineering Record, National Park Service, United States Department of the Interior, Washington, D.C.)