FIELD INSPECTION REPORT

REPORT NO.	FOR BID ITEM NO.
1	0500

PROJECT NAME (SECTION) SNAKE RIVER (NYSSSA) BRIDGE	CONTRACT NO. 12270
HIGHWAY CENTRAL OREGON	F.A. PROJECT NO. X-BHF-STP-S007(32)
PROJECT MANAGER RIC YOUNG	

REASON FOR THIS REPORT
- [x] INSPECTION OF MATERIAL
- [ ] MATERIALS ON HAND
- [ ] OTHER (EXPLAIN)

MATERIALS DELIVERED FOR PROJECT

TYPE OF MATERIAL			DATE DELIVERED
324 X 12.7 STEEL PIPE PILE			2-05-03
SOURCE OF MATERIAL (MANUFACTURER OR FABRICATOR) PARAGON, NUCOR, CHAPEL		DELIVERED TO (NAME OF CONTRACTOR / SUB CONTRACTOR) FE WARD	
QUANTITY DELIVERED 16	UNIT EA	QUANTITY ACCEPTED 16	QUANTITY REJECTED (EXPLAIN) NONE
TOTAL ACCEPTED TO DATE 16.00	ESTIMATED TOTAL REQUIRED 16.00	SAMPLE DATA SHEET NO. FOR SAMPLE SENT TO MATERIALS LAB FOR TESTS	

SUPPORTING DATA
- [ ] MATERIALS INSPECTION I- _____ TEST _____ LABORATORY P03-0060
- [ ] MATERIALS LABORATORY INSPECTION LABEL OR MARK.
- [x] TEST RESULTS CERTIFICATE
- [x] QUALITY COMPLIANCE CERTIFICATE
- [ ] CONFORMANCE TO EQUIPMENT LIST AND DRAWINGS (EXPLAIN)
- [x] CERTIFICATE OF MATERIALS ORIGIN FOR PERMANENTLY INCORPORATED IRON OR STEEL MATERIALS AND THEIR COATINGS ON FEDERAL AID PROJECTS
- [x] FIELD TESTS OR OBSERVATIONS (EXPLAIN)

REMARKS AND EXPLANATIONS, MATERIALS DESCRIPTIONS, DATES OF MANUFACTURE, HEAT AND LOT NOS. DAMAGED OR SUBSTANDARD MATERIALS, REASONS FOR REJECTION AND DISPOSITION OF REJECTED MATERIALS.

THE FOLLOWING 324 X 12.70 STEEL PIPE PILE WAS DELIVERED TO THE PROJECT ON 2-05-03
THE HEAT NUMBERS WERE EXTREMELY DIFFICULT TO READ AND REQUIRED MANY HOURS OF CLEANING AND ROTATING TO FIND THEM ALL.
PILE #8 HAD NO HEAT NUMBER. A LETTER FROM THE SUPPLIER CERTIFYING ITS QUALITY WAS USED FOR ACCEPTANCE.
ALL OTHER PILES APPEAR TO MEET THE REQUIREMENTS OF GRADE 3 STEEL BASED ON THE TEST RESULTS CERTIFICATE.

#1	HT A94650-4	15.46 m
#2	HT 821850	13.94 m
#3	HT A94650-4	14.79 m
#4	HT A94649-3	15.46 m
#5	HT B54701-21	13.48m
#6	HT B54701-20	13.49 m
#7	HT B54701-25	14.06 m
#8	HT NONE	15.39
#9	HT 821850	13.50 m
#10	HT A94650-4	15.47 m
#11	HT B54701-21	13.50 m
#12	HT B54701-21	13.46 m
#13	HT B54701-21	13.46 m
#14	HT B54701-20	13.45 m
#15	HT B54698-25	13.45 m
#16	T 54701-20	13.47 m

16 EA PLUGS, WELDED IN, 10 m UP FROM BOTTOM ~~3/4~~ 1" X 12"D
16 " CAPS 3/4" Pipe Pile Cover Plates
ALL PILE WERE VISUALLY INSPECTED
SUITABLE FOR USE INTENDED

WHERE INSPECTED	DATE	INSPECTED AND PREPARED BY
JOBSITE	2-12-03	[signature]

734-3469 (8-00)

Oregon Department of Transportation

INSPECTION AND LABORATORY REPORT

MATERIALS LABORATORY, 800 AIRPORT RD., SALEM OR 97310

LABORATORY NUMBER: P 03 0060

PROJECT: SNAKE RIVER (NYSSA) BRIDGE SECTION		DATA SHEET NO: I	
HIGHWAY: CENTRAL OREGON	COUNTY: MALHEUR (OREGON) AND CANYON COUNTY IDAHO	EXP. ACCT. SUB JOB: C12770, CON01479	
CONTRACTOR: F.E. WARD INC.		FA PROJECT NO: X-BHF-STP-S0 07(32)	DATE REPORTED
PROJECT MANAGER: RIC YOUNG	AGENCY - ORG. UNIT: 5804	LABORATORY CHARGES: TEST NO. / VAR. / LAB CHARGE	
SUBMITTED BY: MIKE KLEFFNER	AGENCY - ORG. UNIT: 7865		
SHIPMENT OF: STEEL PIPE PILING	SHIPPING POINT: PORTLAND	DESTINATION: JOBSITE	DATE SHIPPED
CONSIGNED TO: F.E WARD INC.	SPECIFICATION: ODOT		BID ITEM NO: 500
INSPECTED AT: R.K. STORAGE AND JOBSITE	INSPECTED BY: R. RODGERS (PSI) ,RUSS BJORKLUND (ODOT)		DATE INSPECTED: 2-12-03

SHIPMENT NO.	QUANTITY REPRESENTED	QUANTITY PREVIOUSLY SHIPPED	TOTAL SHIPPED TO DATE

REMARKS

16 PCS OF WELDED (SPLICED) 324mm (DIAMETER) X 12.7mm (WALL) PIPE PILING (A252 GR. 3)

MATERIAL TEST REPORTS , PSI INSPECTION REPORT, ODOT FIELD INSPECTION REPORT AND CERTIFICATION OF MATERIAL ORIGIN ON FILE.

RECEIVED

MAR 3 2003

OFFICE OF PROJECT MANAGER
ONTARIO, OREGON

☐ P.M. ☐ A.P.M. ☑ O.M. ☐ C.S

Give Copy To Russ

X Files X Salem Lab

FOR DISTRIBUTION ONLY:

X Ric Young

X RAS 5

X F E Ward

MATERIAL REPRESENTED BY THIS SAMPLE ☒ DOES ☐ DOES NOT COMPLY WITH SPECIFICATIONS

BASED ON: ☒ INSPECTION ☒ CERTIFICATION ☐ LAB

ENGINEER OF MATERALS

FIELD USE ONLY

FIELD INSP. NO.	BID ITEM NO.	QUANTITY ACCEPTED	TOTAL TO DATE	QUANTITY REJECTED (EXPLAIN)
1	500	225.83M = 16EA	225.83	NONE

MATERIAL REPRESENTED BY SAMPLE NO. ☐ OSHD TAG MARK ☐ AASHTO/ASTM MARK ☑ OTHER (EXPALIN BELOW)

LAB REPORT ABOVE RECEIVED ON JOB VERIFIED BY: JOBSITE

INSPECTED BY: Russ Bj

DATE: 2-12-03

REMARKS: ALL PILE WERE MARKED WITH HT#. PILE #8 HAD NO HT#. SUPPLIER CERTIFIED QUALITY. VISUALLY INSPECTED, SUITABLE FOR USE INTENDED.

734-3073(8-91)

FORWARD ORIGINAL TO MATERIALS LAB. SALEM, DUPLICATE TO PROJECT MANAGER,

Oregon Department of Transportation

FIELD INSPECTION REPORT

REPORT	FOR BID
1	53

PROJECT NAME (SECTION) Snake River (Nyssa) Bridge	CONTRACT NO. 12770
HIGHWAY Central Oregon Highway / COUNTY Malheur	FEDERAL AID NO. X-BHF-STP-5007(32)
PROJECT MANAGER Ric Young	

REASON FOR THIS REPORT:
- [x] INSPECTION OF MATERIAL
- [ ] RECORD PROGRESS INSPECTION
- [ ] MATERIALS ON HAND
- [ ] JOB CONTROL INSPECTION
- [ ] RECORD FINAL INSPECTION
- [ ] OTHER (EXPLAIN)

MATERIALS DELIVERED FOR PROJECT

TYPE OF MATERIAL	DATE DELIVERED
reinforcement	10-22-03

SOURCE OF MATERIAL (MANUFACTURER OR FABRICATOR	DELIVERED TO (NAME OF CONTRACTOR / SUB CONTRACTOR
Nucor and Cascade Mills	FE Ward

QUANTITY DELIVERED	UNIT	QUANTITY ACCEPTED	QUANTITY REJECTED (EXPLAIN)
16,441	lbs	16,207	234 lbs

TOTAL ACCEPTED TO DATE	ESTIMATED TOTAL REQUIRED	SAMPLE DATA SHEET NO. FOR SAMPLE SENT TO MATERIALS LAB FOR TESTS

MATERIALS DELIVERED FOR PROJECT

- [ ] MATERIALS INSPECTION I- _____ TEST _____ LABORATORY _____
- [ ] MATERIALS LABORATORY INSPECTION LABEL OR MARK.
- [x] TEST RESULTS CERTIFICATE (ATTACH TO PROJECT MANAGER'S AND REGION'S FRI.)
- [ ] QUALITY COMPLIANCE CERTIFICATE (ATTACH TO PROJECT MANAGER'S AND REGION'S FIR.)
- [ ] CONFORMANCE TO EQUIPMENT LIST AND DRAWINGS (ATTACH TO PROJECT MANAGERS AND TO REGION'S FIR. OR EXPLAIN.)
- [x] CERTIFICATE OF MATERIALS ORIGIN FOR PERMANENTLY INCORPORATED STEEL MATERIALS ON FEDERAL AID PROJECTS,)ATTACH TO PROJECT MANAGER'S AND TO REGION'S FIR.)
- [x] FIELD TESTS OR OBSERVATIONS (EXPLAIN)

REMARKS AND EXPLANATIONS, MATERIALS DESCRIPTIONS, DATES OF MANUFACTURE, HEAT AND LOT NOS. DAMAGED OR SUBSTANDARD MATERIALS, REASONS FOR REJECTION AND DISPOSITION OF REJECTED MATERIALS.

234 lbs was rejected at job site. Tags on mark #'s 16138, 16137 and 16132 identified steel as #16, but bar was only #13. Drawings require steel to be #16.

Bent 2, Beam "E", Stage I	= 2,424 lbs	Nucor-Utah bar size =
Pier 4, Beam "A", Stage I	= 5,843 lbs	#16, #22, #32, #13
Bent 1, Beam "E", stage I	= 2,331 lbs	
Pier 1, Beam "A", Stage I	= 5,843 lbs	Cascade Mills bar size =
rejected	- 234 lbs	#6, #5, #19
Total	= 16,207	

All steel delivered is from Nucor Utah and Cascade Mills and found in the latest QPL ~~and~~, marked per Figure A sheets 2 of 3 & 3 of 3

Visually inspected no defects found on accepted bar and suitable for the intended use.

WHERE INSPECTED	DATE	INSPECTED AND PREPARED BY
Job Site	10/28/03	Tina Neal

734-3469 (11-89)

PROJECT MANAGER

Oregon Department of Transportation

CERTIFICATE OF MATERIALS ORIGIN

PROJECT NAME (SECTION)	CONTRACT NO.
SNAKE RIVER (NYSSA) BRIDGE	12770

BID ITEM NO.	BID ITEM NAME
053	DRILLED SHAFT REINFORCEMENT

DOMESTIC MATERIALS SOURCE (NAME AND ADDRESS)

NUCOR STEEL
1231 BRIGHAM YOUNG LANE
PLYMOUTH, UTAH 66666

Cascade Steel Rolling Mill
1234 COOPER RD
COOPERTOWN, NY 55555

DOMESTIC MATERIALS DESCRIPTION

REINFORCING STEEL

FOREIGN MATERIALS SOURCE INCLUDING MATERIAL OF UNKNOWN ORIGIN (NAME AND ADDRESS)

FOREIGN MATERIALS (OR OF UNKNOWN ORIGIN) DESCRIPTION AND VALUE OF IRON OR STEEL PRODUCT AS IT IS DELIVERED TO THE PROJECT

This certification is made for the purpose of establishing materials acceptance under the Contract Special Provisions titled 00160.20(a) Buy America. All iron or steel manufacturing processes, including protective coatings, for the domestic materials described above occurred within the United States of America.

Manufactures' certificates verifying the origin of the above described domestic materials will be kept on file for three years following final payment. Copies will be furnished to the Engineer upon request.

I declare under penalty of perjury under Oregon and Federal laws that the foregoing is true and correct.

AUTHORIZED REPRESENTATIVE *

NAME: J.C. CONTRACTOR

TITLE: PRESIDENT

SIGNATURE: JC Contractor

DATE: 10/22/03

COMPANY* NAME AND ADDRESS –

WILDISH
333 PRIMROSE LANE
IDONTCARE, OR 99999

Submit a new certificate for subsequent shipments if any of the above information changes. * May be Contractor, Sub-Contractor or supplier

734-2126 (2-96) ORIGINAL TO PROJECT MANAGER

Oregon Department of Transportation

FIELD INSPECTION REPORT

REPORT 1	FOR BID 54
PROJECT NAME (SECTION) Snake River (Nyssa) Bridge	CONTRACT NO. 12770
HIGHWAY Central Oregon Highway / COUNTY Malheur	FEDERAL AID NO. X-BHF-STP-5007(32)
PROJECT MANAGER Ric Young	

REASON FOR THIS REPORT:
- [x] INSPECTION OF MATERIAL
- [ ] RECORD PROGRESS INSPECTION
- [ ] MATERIALS ON HAND
- [ ] JOB CONTROL INSPECTION
- [ ] RECORD FINAL INSPECTION
- [ ] OTHER (EXPLAIN)

MATERIALS DELIVERED FOR PROJECT

TYPE OF MATERIAL: reinforcement (Coated)			DATE DELIVERED: 10-23-03
SOURCE OF MATERIAL (MANUFACTURER OR FABRICATOR: Cascade Mills		DELIVERED TO (NAME OF CONTRACTOR / SUB CONTRACTOR: FE Ward	
QUANTITY DELIVERED: ~~234~~ 446	UNIT: lbs	QUANTITY ACCEPTED: ~~234~~ 446	QUANTITY REJECTED (EXPLAIN): 0
TOTAL ACCEPTED TO DATE	ESTIMATED TOTAL REQUIRED	SAMPLE DATA SHEET NO. FOR SAMPLE SENT TO MATERIALS LAB FOR TESTS	

MATERIALS DELIVERED FOR PROJECT

- [ ] MATERIALS INSPECTION I- _____ TEST _____ LABORATORY _____
- [ ] MATERIALS LABORATORY INSPECTION LABEL OR MARK.
- [ ] TEST RESULTS CERTIFICATE (ATTACH TO PROJECT MANAGER'S AND REGION'S FRI.)
- [ ] QUALITY COMPLIANCE CERTIFICATE (ATTACH TO PROJECT MANAGER'S AND REGION'S FIR.)
- [ ] CONFORMANCE TO EQUIPMENT LIST AND DRAWINGS (ATTACH TO PROJECT MANAGERS AND TO REGION'S FIR. OR EXPLAIN.)
- [x] CERTIFICATE OF MATERIALS ORIGIN FOR PERMANENTLY INCORPORATED STEEL MATERIALS ON FEDERAL AID PROJECTS, (ATTACH TO PROJECT MANAGER'S AND TO REGION'S FIR.)
- [x] FIELD TESTS OR OBSERVATIONS (EXPLAIN)

REMARKS AND EXPLANATIONS, MATERIALS DESCRIPTIONS, DATES OF MANUFACTURE, HEAT AND LOT NOS. DAMAGED OR SUBSTANDARD MATERIALS, REASONS FOR REJECTION AND DISPOSITION OF REJECTED MATERIALS.

reinforcement delivered is for Bent 1 Beam "E", stage 1 and Bent 2 Beam "E" stage 1
All steel is in the listed QPL and marked per figure A, sheet 2 of 3.

Bar delivered is from Cascade Mills Lot #16
Western Coatings Inc.

Visually inspected no defects found. Suitable for use intended.

WHERE INSPECTED	DATE	INSPECTED AND PREPARED BY
job site	10-28-03	Tina Neal

734-3469 (11-89)

PROJECT MANAGER

1/3

Western Coating, Inc.

P.O. Box 1348 • Auburn, WA 98071
Phone (253) 735-1070
FAX (253) 735-1075

JOB CERTIFICATION

JOB NAME : SNAKE RIVER BRIDGE
CONTRACTOR : F.E. WARD
CONTRACT NO.: X-BHF-STP-S007(32)
CUST. P.O. NO.: *73070
RELEASE(S): *115,116,119,124

WE CERTIFY THAT ALL MANUFACTURING PROCESSES OCCURRED WITHIN THE U.S.A.

REBAR SUPPLIER: CASCADE

SIZE	WEIGHT	HEAT(S)	POWDER LOT(S)
# 3/10MM	0	0	0
# 4/13MM	0	0	0
# 5/16MM	47,774 ✓	447203	025131030724A
# 6/19MM	0	0	0
# 7/22MM	0	0	0
# 8/25MM	0	0	0
# 9/29MM	0	0	0
#10/32MM	0	0	0
#11/36MM	0	0	0
#4/13MM	0	0	0
DYE	0	0	0
TOTAL:	47,774 *LBS*		

PREHEAT TEMP.: 450 F. TO 463 F.
THICKNESS CHECK: 10 MILS +/- 2 MILS
HOLIDAY TEST: LESS THAN 2 PER FOOT

WE CERTIFY THAT THE ABOVE REINFORCEMENT BAR HAS BEEN COATED IN COMPLIANCE WITH THE POWDER MANUFACTURERS' SPECIFICATIONS AND RECOMMENDATIONS, ALSO IN COMPLIANCE WITH AASHTO M284, ASTM A775, ASTM D3963 AND/OR OREGON STATE SPECIFICATIONS.
WE ALSO CERTIFY THAT THE PATCH MATERIAL COMPLIES WITH THESE SAME SPECIFICATIONS.

AUTHORIZED SIGNATURE _____
VICTORIA LOPEZ
QUALITY CONTROL

1CC FILE
1CC JOBSITE
1CC JOBSITE INSPECTOR

DATED: 18-NOV-03

CERTIFIED PLANT

Specialists in Epoxy Coated Rebar

2/3

CERTIFICATE OF MATERIALS ORIGIN

PROJECT NAME (SECTION)	CONTRACT NO.
SNAKE RIVER (NYSSA) BRIDGE	12770

BID ITEM NO.	BID ITEM NAME
54	REINFORCEMENT (COATED)

DOMESTIC MATERIALS SOURCE (NAME AND ADDRESS)

CASCADE STEEL ROLLING MILLS
3200 NORTH HWY 99W
MCMINNVILLE, OR 97128

WESTERN COATINGS, INC
PO BOX 1348
AUBURN, WA 98071

DOMESTIC MATERIALS DESCRIPTION

123D (BENT 1 BEAM "E" STAGE 1)

123E (BENT 2 BEAM "E" STAGE 1)

FOREIGN MATERIALS SOURCE INCLUDING MATERIAL OF UNKNOWN ORIGIN (NAME AND ADDRESS)

FOREIGN MATERIALS (OR OF UNKNOWN ORIGIN) DESCRIPTION AND VALUE OF IRON OR STEEL PRODUCT AS IT IS DELIVERED TO THE PROJECT

This certification is made for the purpose of establishing materials acceptance under the Contract Special Provisions titled 00160.20(a) Buy America. All iron or steel manufacturing processes, including protective coatings, for the domestic materials described above occurred within the United States of America.

Manufactures' certificates verifying the origin of the above described domestic materials will be kept on file for three years following final payment. Copies will be furnished to the Engineer upon request.

I declare under penalty of perjury under Oregon and Federal laws that the foregoing is true and correct.

AUTHORIZED REPRESENTATIVE *

NAME. DANIEL H. PAYNE

TITLE. PROJ ENGINEER

SIGNATURE: Daniel H. Payne

DATE. 10/23/03

COMPANY* NAME AND ADDRESS --

F.E. WARD
2710 NE 78TH ST
VANCOUVER WA 98665

Submit a new certificate for subsequent shipments if any of the above information changes.

* May be Contractor, Sub-Contractor or supplier

734-2126 (2-96) ORIGINAL TO PROJECT MANAGER

3/3

** COPY ** OREGON DEPARTMENT OF TRANSPORTATION ** COPY **
MATERIALS LABORATORY
800 AIRPORT RD. SE SALEM, OR 97301-4798
(503)986-3100
FAX(503)986-3096

Contract No.: C12770 EA No.: CON01511 Lab No.: 03-000165
Project: SNAKE RIVER (NYSSA) BRIDGE
Highway: Central Oregon County: LNCLN/LANE Data Sheet No.: F7874 713
Contractor: WILDISH FA No.: X-IM-S006(16)
Project Manager: Org Unit: 2839 Bid Item No.: 0540
Submitted By: DENNIS PACE Org Unit: 2816 Sample No.: 1-1,1-2,1-3
Material Source: S.S.N.A. & NUCOR STEEL Qty Represented: 100 PCS
Sampled At: JOB SITE Sampled By: Witnessed By:
DATE-Sampled: 03/10/13 Received: 03/10/22 Tested: 03/10/24 Reported:
Type of Test: TECHNICIAN CERTIFICATION Use: MECHANICAL BUTT SPLICE, #36

STEEL REBAR SPLICE TEST REPORT

REBAR SPLICE CERTIFICATION FOR : Dave Towell

Product : Unthreaded Splice
Manufacturer : SPLICE SLEEVE N.A.
Heat No. : ER-5645 Type 2 NMB
Rebar Size (sm) : # 11
Rebar Size (lg) : # 11
Coating : Plain Steel
Grade : 60
Reference : ODOT Standard Specification Section 02510.20

Sample No. :	1	2	3
Test Area (in2) :	1.56	1.56	1.56
Yield Load (lb) :	104,400	105,600	104,500
Yield Strength (psi) :	66,900	67,700	67,000
Tensile Load (lb) :	131,200	139,000	146,500
Tensile Strength (psi) :	84,100	89,100	93,900
Total Slip (in) :			
Marking (sm) :			
Marking (lg) :	ok	ok	ok

$

TOTAL CHARGES: $ 0.00

REMARKS:
Material represented by sample DOES comply with specifications.
Unable to perform slip test on couplers due to their size and length.
*

REPORT SHALL NOT BE REPRODUCED, EXCEPT IN FULL, WITHOUT WRITTEN APPROVAL OF THIS LABORATORY.

C: FILES ; PROJ MGR: DAVE DAVIES ; RAS 2 ; F.E. WARD

Oregon Department of Transportation

TEST SUMMARY (A)

(NONFIELD TESTED MATERIALS)

CONTRACT NO.	SHEET
C12770	10A

REVIEWERS AND DATES

ITEM NO.	UNIT	ORIGINAL QUANTITY	FINAL QUANTITY
0550	LS	100	
0560	LS	100	
0570	M²	198	
0580	LS	100	
0590	EA	5	
0600	EA	5	

LINE	DATE OF SAMPLE, TEST, OR INSPECTION	FIR REPORT NO.	DATA SHEET NO. OR MATERIALS LAB. "I" REPORT NO.	LAB REPORT NO.	TEST RESULTS CERTIFICATE	QUALITY COMPLIANCE CERTIFICATE	"Q" WITH MATERIALS "I" REPORT NO.	EQUIPMENT LISTS AND DRAWINGS	CERTIFICATE OF MATERIALS ORIGIN	0550 STRUCTURAL CONCRETE, CLASS 25	0560 STRUCTURAL CONCRETE, CLASS 30	0570 REINF. CONCRERTE BRIDGE END PANELS	0580 STRUCTURAL STEEL	0590 BEARING DEVICES, BENT 1	0600 BEARING DEVICES, BENT 2	EXPLANATIONS AND NONCOMPLIANCE MATERIALS DESCRIPTION
		F		L	T	Q	QI	E	O			F,Q,O	F,O,QPL	F,T,O	F,T,O	
										INCORPORATED QUANTITIES						
1	See Notes											X				See BI 0560 for Class 30 Concrete
2	3/3/03	1		03-00648									60 Gal.			Galvapac Zinc Primer - Complies
3	8/27/03	1		P03-0194									X			Bolts / Nuts / Washers
4	5/31/03	1			X				X					22 Ea	X	Bearing Pads - Covers BI 59-64 (5 pages)
5	8/11/03	2												X	X	Grout = APL. Covers BI 59-64
6	See Notes											X				See BI 53 & 54 for Reinforcement
7	See Notes											X				See B Sheet #10B for Structural Backfill
8										X						SEE B SHEET FOR CLASS 25
9											X					SEE SHEET 10C FOR CLASS 30
10																
11																
12																
13																
14																
15																
16																
17																
18																
19																
20																

734-1902-A (10-01)

This sheet

was intentionally

left blank.

OREGON DEPARTMENT OF TRANSPORTATION
MATERIALS LABORATORY
800 AIRPORT RD. SE SALEM, OR 97301-4798
(503)986-3100
FAX(503)986-3096

Contract No.: C12770 **EA No.: CON01479** **Lab No.: 03-000648**
Project: SNAKE RIVER (NYSSA) BRIDGE
Hi[illegible]y: CENTRAL OREGON County: MALHEUR **Data Sheet No.: F1972 100**
Co[illegible]actor: F.E. WARD INC FA No.: X-BHF-STP-S007(32)
Project Manager: RIC YOUNG Org Unit: 5804 Bid Item No.: 0580
Submitted By: VAUGHN HANSEN Org Unit: 7865 Sample No.:
Material Source: SHERWIN WILLIAMS CO. Qty Represented: 60 GALLONS
Sampled At: PLANT Sampled By: Witnessed By:
DATE-Sampled: 03/ 2/21 Received: 03/ 2/24 Tested: 03/ 3/ 3 Date Reported:
Class/Type: Quality Control **Use: GALVAPAC ZINC PRIMER** MAR 0 4 2003

TEST REPORT: PAINT - STRUCT. COATINGS CHECK

Lot / Batch No.: # 3X4004700
Brand : GALVAPAC ZINC PRIMER
Formula : Moist. Cured Polyurethane

Test Method	Determined Results	Specification
	Color : Gray	
ASTM D562 ASTM D1210	Viscosity (KU) : 110 Fineness of Grind :	
ASTM D1475 ASTM D2369 ASTM D2369 ASTM D2697 ASTM D2697	Weight (lbs./gal.) : 28.88 Total Solids (Wt%) : 91.60 Total Volatiles (Wt%) : 8.40 Total Solids (Vol) : 72.58 Total Volatiles (lbs/gal) : 2.43	 58% minimum 2.8 maximum
[illegible]TM D3723 ASTM D3723 FTMS 4053	Inorganic Pigment (%) : 85.24 Vehicle (%) : 14.76 Veh Solids in Paint (%) : 6.36	
FTMS 4051 FTMS 4051	Veh Solids in Veh (%) : 43.09 Volatiles in Vehicle (%) : 56.91	
ASTM D1640 ASTM D1640	Dry Time - Touch (min) : Dry Time - Hard (min) :	
ODOT TM614 ASTM D50	Zinc Film - Dry (%) : 82.05 Micaceous Iron Oxide (g/L) :	80% minimum

580X =$ 0.

TOTAL CHARGES: $ 0.00

REMARKS:
Material represented by sample **DOES** comply with specifications.

*

REPORT SHALL NOT BE REPRODUCED, EXCEPT IN FULL, WITHOUT WRITTEN APPROVAL OF THIS LABORATORY.

C: FILES ; PROJ MGR: RIC YOUNG ; RAS 5 ; F.E. WARD INC ; PORTLAND MATERIALS

Kenneth L Stoneman
STATE CONSTRUCTION AND MATERIALS ENGINEER

Oregon Department of Transportation

INSPECTION AND LABORATORY REPORT

MATERIALS LABORATORY, 800 AIRPORT RD., SALEM OR 97310

LABORATORY NUMBER: P 03 0194

PROJECT: SNAKE RIVER (NYSSA) BRIDGE SECTION		DATA SHEET NO: I	
HIGHWAY: CENTRAL OREGON HIGHWAY	COUNTY: MALHEUR	EXP. ACCT. SUB JOB: C12770 CON01479	
CONTRACTOR: F E WARD, INC.		FA PROJECT NO: X-BHF-S (P-S007(32))	DATE REPORTED: 5-30-03
PROJECT MANAGER: RIC YOUNG	AGENCY - ORG. UNIT: 5804	LABORATORY CHARGES: TEST NO. / VAR. / LAB CHARGE	
SUBMITTED BY: MIKE KLEFFNER	AGENCY - ORG. UNIT: 7865		
SHIPMENT OF: FIELD BOLTS	SHIPPING POINT	DESTINATION	DATE SHIPPED
CONSIGNED TO: FOUGHT & CO.	SPECIFICATION: ASTM & ODOT		BID ITEM NO: 0580
INSPECTED AT: FOUGHT & CO.	INSPECTED BY: VAUGHN HANSEN		DATE INSPECTED: 4-11-03
SHIPMENT NO.	QUANTITY REPRESENTED	QUANTITY PREVIOUSLY SHIPPED	TOTAL SHIPPED TO DATE

REMARKS *FIELD BOLTS*

197ea- 7/8" x 2-1/2" A325-3 bolt..	RCT #309101	ODOT LAB# 03-001374
497ea- 7/8" x 2-3/4" A325-3 bolt..	RCT #309102	ODOT LAB# 03-001375
172ea- 7/8" x 3" A325-3 bolt.	RCT #309103	ODOT LAB# 03-001376
1432ea- 7/8" x 3-1/4" A325-3 bolt.	RCT #309104	ODOT LAB# 03-001377
67ea- 7/8" x 3-3/4" A325-3 bolt.	RCT #309105	ODOT LAB# 03-001378
52ea- 7/8" x 4" A325-3 bolt.	RCT #309106	ODOT LAB# 03-001379
718ea- 7/8" x 4-1/4" A325-3 bolt.	RCT #309107	ODOT LAB# 03-001380
609ea- 7/8" x 4-1/4" A325-3 bolt.	RCT #309108	ODOT LAB# 03-001381
16ea- 7/8" x 4-1/2" A325-3 bolt.	RCT #309109	ODOT LAB# 03-001382
187ea- 7/8" x 4-3/4" A325-3 bolt.	RCT #309110	ODOT LAB# 03-001383
692ea- 7/8" x 5" A325-3 bolt.	RCT #309111	ODOT LAB# 03-001384
4639ea- 7/8" A563 DH3 nut.	RCT # ALL OF THE ABOVE	ODOT LAB# 03-001885
4639ea- 7/8" F436-3 washer.	RCT # ALL OF THE ABOVE	ODOT LAB# 03-001386

RECEIVED

Certifications and CMO satisfactory, on file at Portland Materials Office.

Bolts = 4629
Nuts = 4639
washer = 4639

JUN 06 2003

OFFICE OF PROJECT MANAGER
ONTARIO, OREGON
☐ P.M. ☐ A.P.M. ☐ O.M. ☐ C.S

X Files X Salem Lab

FOR DISTRIBUTION ONLY:
X Ric Young
X RAS 5
X F E Ward

MATERIAL REPRESENTED BY THIS SAMPLE ☒ DOES ☐ DOES NOT COMPLY WITH SPECIFICATIONS
BASED ON: ☒ INSPECTION ☒ CERTIFICATION ☐ LAB

Kenneth R. Stevenson
ENGINEER OF MATERALS

FIELD USE ONLY

FIELD INSP. NO.	BID ITEM NO.	QUANTITY ACCEPTED	TOTAL TO DATE	QUANTITY REJECTED (EXPLAIN)
1	580	see above		0

MATERIAL REPRESENTED BY LAB REPORT ABOVE RECEIVED ON JOB VERIFIED BY: SAMPLE NO. ☐ OSHD TAG MARK ☐ AASHTO/ASTM MARK ☐ OTHER (EXPALIN BELOW) | INSPECTED BY: Tina Neal | DATE: 8-27-03

REMARKS material was visually inspected and found free of defects, suitable for the use intended

734-3073(8-91) FORWARD ORIGINAL TO MATERIALS LAB. SALEM, DUPLICATE TO PROJECT MANAGER,

FIELD INSPECTION REPORT

REPORT NO.	FOR BID ITEM NO.
1	590 thru 640

PROJECT NAME (SECTION) SNAKE RIVER (NYSSSA) BRIDGE	CONTRACT NO. 12270
HIGHWAY CENTRAL OREGON	F.A. PROJECT NO. X-BHF-STP-S007(32)
PROJECT MANAGER RIC YOUNG	

REASON FOR THIS REPORT

- [x] INSPECTION OF MATERIAL
- [ ] MATERIALS ON HAND
- [ ] OTHER (EXPLAIN)

MATERIALS DELIVERED FOR PROJECT

TYPE OF MATERIAL			DATE DELIVERED
Bearing Devices			5-31-03
SOURCE OF MATERIAL (MANUFACTURER OR FABRICATOR)		DELIVERED TO (NAME OF CONTRACTOR / SUB CONTRACTOR)	FE Ward
DS Brown			
QUANTITY DELIVERED	UNIT	QUANTITY ACCEPTED	QUANTITY REJECTED (EXPLAIN)
22	ea	66	None
TOTAL ACCEPTED TO DATE 22.00	ESTIMATED TOTAL REQUIRED 22.00	SAMPLE DATA SHEET NO. FOR SAMPLE SENT TO MATERIALS LAB FOR TESTS	

SUPPORTING DATA

- [ ] MATERIALS INSPECTION I- _____ TEST _____ LABORATORY _____
- [ ] MATERIALS LABORATORY INSPECTION LABEL OR MARK.
- [x] TEST RESULTS CERTIFICATE
- [ ] QUALITY COMPLIANCE CERTIFICATE
- [ ] CONFORMANCE TO EQUIPMENT LIST AND DRAWINGS (EXPLAIN)
- [x] CERTIFICATE OF MATERIALS ORIGIN FOR PERMANENTLY INCORPORATED IRON OR STEEL MATERIALS AND THEIR COATINGS ON FEDERAL AID PROJECTS
- [x] FIELD TESTS OR OBSERVATIONS (EXPLAIN)

REMARKS AND EXPLANATIONS, MATERIALS DESCRIPTIONS, DATES OF MANUFACTURE, HEAT AND LOT NOS. DAMAGED OR SUBSTANDARD MATERIALS, REASONS FOR REJECTION AND DISPOSITION OF REJECTED MATERIALS.

Bearing devices for Bents 1&2, Piers 1 thru 4

Test results certificate reviewed by Bridge Section

"Q" on QPL page 34, product #169

Visually inspected, suitable for use intended

Record #23

WHERE INSPECTED	DATE	INSPECTED AND PREPARED BY
Jobsite	5-31-03	[signature]

734-3469 (8-00)

1/5

D.S. BROWN

The D.S. Brown Company
300 E. Cherry Street
North Baltimore, Ohio 45872
419.257.3561
Fax: 419.257.2200
e-mail: dsb@dsbrown.com
www.dsbrown.com

Lewis Engineering Division
4201 Norex Drive
Chaska, Minnesota 55318
612.368.3000
Fax: 612.448.7200

International Division
57 [illegible]
[illegible]
65.862.6266
Fax: 65 862 [illegible]
e-mail:
[illegible]

Coefficient of Friction Test Results

Project:	Mon-Fayette Expressway over Rubles Run
Contract:	X331-109-1.36 04
County:	Monongalia
State:	West Virginia
Contractor:	National Engineering
D.S. Brown #:	1660-1112
State Specification:	615
Location:	Abutment 2 Southbound
D.S. Brown Sheet #:	5
Lot No.:	PMG-252A
Date Performed:	02/15/02
Press #:	16
Approved by:	Brian L. Baeder
Test Witnessed by:	John Petty
Company:	The R.W. Hunt Company

Test Data			Required	Actual
Area of PTFE (sq. in.)			N/A	73
Vertical Teflon Pressure (psi)			N/A	3,478
Vertical Load (lbs)			252,000	254,200
Vertical Gage (psi)			N/A	490
Cycle	Length		+ / - 1"	+ / - 1"
	Sliding Speed	1st Cycle	<1" / min.	.95" / min.
		Next Cycles	1' / min. maximum	6" / min.
	Repetitions		101	101
Comments:				

In witness: Brian L. Baeder, subscribed and sworn to before me this February 15, 2002

[illegible]; My commission expires on March 10, 2002.

2/5

D.S. BROWN

The D.S. Brown Company
300 E. Cherry Street
North Baltimore, Ohio 45872
419.257.3561
Fax: 419.257.2200
e-mail: dsb@dsbrown.com
www.dsbrown.com

Lewis Engineering Division
4201 Norex Drive
Chaska, Minnesota 55318
612.368.3000
Fax: 612.448.7300

International Division
57 Pioneer Road
S[illegible]
65[illegible]
Fax: 65.862.6255
e-mail:
dsbrown@[illegible]

Coefficient of Friction Test Results

Project: Mon-Fayette Expressway over Rubles Run
County: Monongalia
State: West Virginia
Lot No.: PMG-252A
DSB Sheet #: 5

Type Loading	Cycle	Horizontal Load (lbs)	Coefficient Of Friction (Fh/2) / Vert Load
Static In	1	12,000	2.36%
Static Out	1	6,400	1.26%
Dynamic In	1	6,000	1.18%
Dynamic Out	1	5,200	1.02%
Static In	101	12,400	2.44%
Static Out	101	10,400	2.05%
Dynamic In	101	8,800	1.73%
Dynamic Out	101	8,000	1.57%

Comments: Based on the above results, the max. coefficent of friction = 2.44%
3% allowed per specifications
Specification: 615
No deformation or cold flow of PTFE or other signs of failure were observed.

D.S. BROWN

RECEIVED
JAN 09 2003
BRIDGE SECTION

JOINT WELDING PROCEDURE

Material Specification: A709Gr36(GR250); A709Gr50(Gr345); A709Gr50W(Gr345W)
304 SS; 316SS

Welding process: GTAW Position of welding: 2F Manual or Machine: MANUAL

Filler metal specification A5.9 Filler metal classification: ER309L

Flux: N/A Shielding gas: 100% Argon Flow rate: 20 CFH

Single or multiple pass: SINGLE Single or multiple arc: SINGLE ESO: N/A

Welding current: DC Polarity: STRAIGHT Welding progression: STRINGER

Preheat and interpass temperature: SEE NOTE BELOW (NO PREHEAT OF STAINLESS STEEL)
A709Gr36(Gr250);A709Gr50(Gr345); A709Gr50W(Gr345W):
To 3/4"Include.(19 mm)=50°F ;Over3/4" to 1.5"Include.(19 to 38mm)=70°F
Over 1.5" to 2.5"Incl.(38 to 63.5mm)=150°F; Over 2.5"(63,5mm)=225F.

Pass No.	Electrode Size	Welding Current Amps	Voltage	Travel Speed in.(mm)/min.	Weld Size "S" (Material thickness)
1	1/8(3 MM)	130 - 160	10 - 12	4(102) - 7(177)	20 GA. (SEAL)
1	1/8(3 MM)	130 - 160	10 - 12	4(102) - 7(177)	16GA. (1.5MM)
1	1/8(3 MM)	130 - 160	10 - 12	4(102) - 7(177)	14GA. (1.9MM)
1	1/8(3 MM)	130 - 160	10 - 12	4(102) - 7(177)	12GA. (2.7MM)
1	1/8(3 MM)	130 - 160	10 - 12	4(102) - 7(177)	11GA. (3.0MM)
1	1/8(3 MM)	130 - 160	10 - 12	4(102) - 7(177)	10GA. (3.4MM)

Notes:
T1 = VARIES

"S" FILLET WELD LEG SIZE SHALL NOT EXCEED THICKNESS OF STAINLESS STEEL.

NO PREHEAT REQUIRED ON THE STAINLESS STEEL MATERIAL.

JAN 25 2003
Subject to Sections 00150.3 & 00150.3
By

FILLET

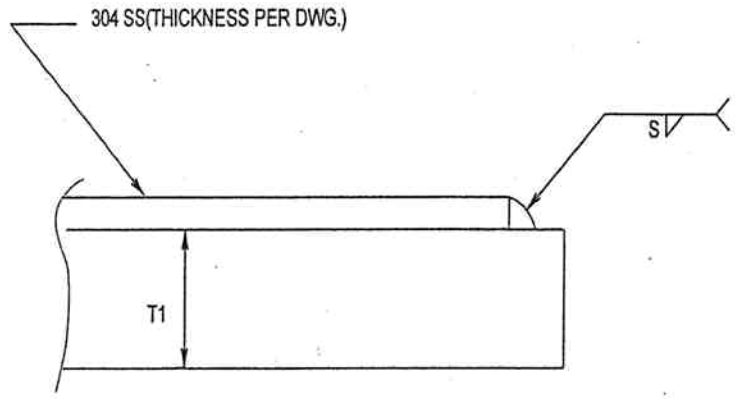

This procedure may vary due to fabrication sequence, fit-up, pass size, etc. within limitation of variables given in the AWS/AASHTO/ D1.1 Structural Welding Code and/or the D1.5 Bridge Welding Code (as applicable).

Procedure No.: (NB)GTF-01 Revision No.: 01 Date: March 6, 2002

Project: DSB Job No.: 7221-1112-OR

Prepared By: James R. Connor (DSB QA Manager) Authorized By:

Oregon Department of Transportation

CERTIFICATE OF MATERIALS ORIGIN

PROJECT NAME (SECTION)	CONTRACT NO.
Snake River (Nyssa) Bridge	12770

BID ITEM NO.	BID ITEM NAME
59, 60, 61, 62, 63 & 64	Bearing Devices Pier 1, 2, 3, 4 Bents 1 & 2

DOMESTIC MATERIALS SOURCE (NAME AND ADDRESS)

D.S Brown
300 E Cherry St.
North Baltimore, Ohio 45872

DOMESTIC MATERIALS DESCRIPTION

Bearing Pads

FOREIGN MATERIALS SOURCE INCLUDING MATERIAL OF UNKNOWN ORIGIN (NAME AND ADDRESS)

FOREIGN MATERIALS (OR OF UNKNOWN ORIGIN) DESCRIPTION AND VALUE OF IRON OR STEEL PRODUCT AS IT IS DELIVERED TO THE PROJECT

This certification is made for the purpose of establishing materials acceptance under the Contract Special Provisions titled 00160.20(a) Buy America. All iron or steel manufacturing processes, including protective coatings, for the domestic materials described above occurred within the United States of America.

Manufactures' certificates verifying the origin of the above described domestic materials will be kept on file for three years following final payment. Copies will be furnished to the Engineer upon request.

I declare under penalty of perjury under Oregon and Federal laws that the foregoing is true and correct.

AUTHORIZED REPRESENTATIVE *

NAME: BUCK REBAR
TITLE: PRESIDENT
SIGNATURE: Buck Rebar
DATE: 7-10-03

COMPANY* NAME AND ADDRESS –

Wildish Construction
PO Box 1234
Idontcare, Oregon 99999

Submit a new certificate for subsequent shipments if any of the above information changes. * May be Contractor, Sub-Contractor or supplier

734-2126 (2-96) ORIGINAL TO PROJECT MANAGER

5/5

FIELD INSPECTION REPORT

REPORT NO.	FOR BID ITEM NO.
2	590 thru 640

PROJECT NAME (SECTION) SNAKE RIVER (NYSSSA) BRIDGE	CONTRACT NO. 12270
HIGHWAY CENTRAL OREGON	F.A. PROJECT NO. X-BHF-STP-S007(32)
PROJECT MANAGER RIC YOUNG	

REASON FOR THIS REPORT

- [x] INSPECTION OF MATERIAL
- [ ] MATERIALS ON HAND
- [ ] OTHER (EXPLAIN)

MATERIALS DELIVERED FOR PROJECT

TYPE OF MATERIAL			DATE DELIVERED
Grout for bearing devices			8-11-03
SOURCE OF MATERIAL (MANUFACTURER OR FABRICATOR) Dayton Superior		DELIVERED TO (NAME OF CONTRACTOR / SUB CONTRACTOR) FE Ward	
QUANTITY DELIVERED 225	UNIT 50lb bags	QUANTITY ACCEPTED 225	QUANTITY REJECTED (EXPLAIN) None
TOTAL ACCEPTED TO DATE 225.00	ESTIMATED TOTAL REQUIRED 620.00	SAMPLE DATA SHEET NO. FOR SAMPLE SENT TO MATERIALS LAB FOR TESTS	

SUPPORTING DATA

- [ ] MATERIALS INSPECTION I- _____ TEST _____ LABORATORY _____
- [ ] MATERIALS LABORATORY INSPECTION LABEL OR MARK.
- [ ] TEST RESULTS CERTIFICATE
- [ ] QUALITY COMPLIANCE CERTIFICATE
- [ ] CONFORMANCE TO EQUIPMENT LIST AND DRAWINGS (EXPLAIN)
- [ ] CERTIFICATE OF MATERIALS ORIGIN FOR PERMANENTLY INCORPORATED IRON OR STEEL MATERIALS AND THEIR COATINGS ON FEDERAL AID PROJECTS
- [x] FIELD TESTS OR OBSERVATIONS (EXPLAIN)

REMARKS AND EXPLANATIONS, MATERIALS DESCRIPTIONS, DATES OF MANUFACTURE, HEAT AND LOT NOS. DAMAGED OR SUBSTANDARD MATERIALS, REASONS FOR REJECTION AND DISPOSITION OF REJECTED MATERIALS.

1107 Advantage Grout for bearing devices, Bents 1&2, Piers 1 thru 4

"A" on QPL page 68, product #1427

Visually inspected, suitable for use intended

Record #27

WHERE INSPECTED	DATE	INSPECTED AND PREPARED BY
JOBSITE	8-11-03	[signature]

734-3469 (8-00)

Oregon State Department of Transportation

TEST SUMMARY (B-QA)

(FIELD TESTED MATERIALS)

CONTRACT NO.	SHEET
C12770	10B

REVIEWERS AND DATES

ITEM NO	DESCRIPTION	UNIT	ORIG. QUANT.	FINAL QUANT.
0570	**Structural Backfill** ***(Reinf. Concrete Br. End Panels)***	N/A		

LINE	DATE OF SAMPLE, TEST, OR INSPECTION	REPORT NO.	DATA SHEET NO.	LAB REPORT NO.	TESTING BY: QUALITY CONTROL BY CONTRACTOR	REGION-QUALITY VERIFICATION	REGION-INDEPENDENT ASSURANCE	CONTRACTOR-INDEPENDENT ASSURANCE (SPLIT SAMPLE)		TEST METHOD AND FREQUENCY: SOURCE MATERIAL (QUALIFYING)	MIX DESIGN								DENSITY	STRENGTH	VISUAL	QUANTITIES: IN COMPLIANCE INCORPORATED	NON-COMPLIANCE INCORPORATED	WORK PHASE: AGGR. PROD / MIX PRODUCTION / DENSITY / OTHER — EXPLANATIONS AND NON-COMPLIANCE
1																								
2																								
3																								
4																								
5																								
6																								
7																								
8																								
9																								
10																								
11																								
12																								
13																								
14																								
15																								
16																								
17																								
18																								
19																								
20																								
21																								

734-1902-B(4-96)

This sheet

was intentionally

left blank.

TEST SUMMARY (B) - QA
(Field Tested Concrete Materials)

CONTRACT NO.	SHEET
C12770	10C

REVIEWERS AND DATES	CLASS OF CONCRETE:	ORIG. QUANTITY	FINAL QUANTITY
	BI 560 - STRUCTURAL CONCRETE, CLASS 30	100% LS	

TESTING FREQUENCIES	
	SAMPLING, AIR CONTENT, SLUMP & CONCRETE TEMP. = 1 PER EACH SET OF CYLINDERS
	STRENGTH: >20m³ = 1 Set/ 20³ . 20 - 75 m³ = 1 Set / Day. 75 - 450 m³ = 1 Set / 75m³. Over 450 m³ = 1 Set / 150 m³. (TESTING IS PER DAILY PRODUCTION)

DATE MATERIAL PLACED	BID ITEM NUMBER	DESCRIPTION OF WORK (curb, inlet, etc.)	QUANTITY PLACED	ACCUMULATIVE QUANTITY	MIX DESIGN #	TEST METHOD AND FREQUENCY										COMMENTS
						REGION - QUALITY VERIFICATION	LAB REPORT NO.	CYLINDERS Y or N?	AIR CONTENT	SLUMP	W/C RATIO / YIELD	TEMPERATURE	DENSITY	BREAK RESULTS	ADJUSTMENT FOR NON-COMPLIANCE MATERIALS? Y or N	
4/8/03		CLASS 30 MIX DESIGN			ICCO 3126106		03-001160									Idaho Concrete #ICCO 3126106
5/20/03	0560	Pier 4 Station 0+725	55.05	55.05				Y	Y	Y	Y	Y	Y	45.5	N	
6/10/03	0560	Pier 4 - Bearing Device	48.17	103.22				Y	Y	Y	Y	Y	Y	36.31	N	
6/10/03	0560	Pier 1 - Bridge 18776	0.00	103.22		V-1	03-003071	Y	Y	Y	Y	Y	Y	38.7	N	
6/18/03	0560	Bearing Device, Pier 2	55.04	158.26				Y	Y	Y	Y	Y	Y	28.15	Y	See Price Adjustment #6056A
8/27/03	0570	Concrete Bridge End Panels	37.6	195.86				Y	Y	Y	Y	Y	Y	36.3		
See Notes →																SEE BI 460 FOR COMMERCIAL SOURCE MEMO (Aggregate)

This sheet

was intentionally

left blank.

OREGON DEPARTMENT OF TRANSPORTATION
MATERIALS LABORATORY
800 AIRPORT RD. SE SALEM, OR 97301-4798
(503)986-3100
FAX(503)986-3096

Contract No.: **EA No.: IN7872** **Lab No.: 03-001160**
Project: CONCRETE MIX DESIGN- STRUCTURAL CLASS 30
Highway: County: **Data Sheet No.: NONE**
Contractor: FA No.:
Project Manager: Org Unit: Bid Item No.:
Submitted By: ERIC KNAPP Org Unit: Sample No.: NA
Material Source: Qty Represented: NA
DATE-Sampled: NA Received: 03/ 4/ 3 Tested: 03/ 4/ 7 Reported: APR 0 8 2003
Type of Test: Mix Design Review - Structural Use: Class 30.0-19.0 mm - Class 4350 psi

REVIEW OF CONTRACTOR CONCRETE MIX DESIGN - TM 741x

Mix Producer: IDAHO CONCRETE CO INC Contractor Mix Design No.: ICCO 3126106

The request to review Structural Class 30 concrete mix design was evaluated according to the Standard Specifications.

Based on a review of the mix proportions and the available data it has been determined that the mix design complies with the specifications. This mix design is approved for use on ODOT projects for one year. Use in accordance with and as allowed by project Special Provisions. Note: 9.5-2.36 mm meets the 2002 Standard Specifications for separated sizes.

Mix proportions as submitted

Cement	288 kg/m3	ASH GROVE		Type I Durkee	
Fly Ash	72 kg/m3	ISG		Class F Centralia	
19-9.5	791 kg/m3 SSD	Gssd : 2.614	Abs : 1.7 %	Source : 23-133-5	
9.5-2.36	193 kg/m3 SSD	Gssd : 2.614	Abs : 1.7 %	Source : 23-133-5	
4.75-0	783 kg/m3 SSD	Gssd : 2.640	Abs : 1.4 %	Source : 23-133-5	FM : 2.76
Water	144 kg/m3	W/C Ratio : 0.40		Slump : 100 mm	
Air Content	6.0 %				
Density	2242 kg/m3				

Air Entrainment Agent : Mstr Bldrs/AE-90
Water Reducer : Mstr Bldrs/Prokrete-N

This report does not supersede, delete or amend the project specifications. Our review of this mix design does not relieve the Contractor of the responsibility to produce satisfactory concrete.

741X =$ 0.

TOTAL CHARGES: $ 0.00

REMARKS:
Mix Design **DOES** comply with specifications.

*

REPORT SHALL NOT BE REPRODUCED, EXCEPT IN FULL, WITHOUT WRITTEN APPROVAL OF THIS LABORATORY.

C: FILES ; R. KESSLER-CONSTRUCTION ; IDAHO CONCRETE CO INC
RAS 5; QAC 5; PM YOUNG

Kenneth L Stoneman
STATE CONSTRUCTION AND MATERIALS ENGINEER

30017

SAMPLE DATA SHEET FOR CONCRETE CYLINDERS

LABORATORY REPORT NUMBER	CON NO.	EXP. ACCT.	DATA SHEET NUMBER F- -
PROJECT NAME (SECTION): Snake River (nyssa) Bridge Section			CONTRACT NUMBER: 12770
CONTRACTOR: F.E. Ward / TBH & Associate LLC	PROJECT MANAGER: RIC YOUNG		BID ITEM NUMBER: 56
CONCRETE SUPPLIER: I.C.C.O.	SUBMITTED BY:		QUANTITY REPRESENTED: 55.05 m³
CONCRETE FOR USE IN (LOCATION OR PLACEMENT): Bearing Device / PIER # 4 (class 30)	BRIDGE NUMBER: 19176	STRENGTH REQUIRED: 30 MPa 28 DAYS	
REPRESENTED BY NO. OF CYLS.: 4	SET NUMBER: 1	DATE CAST: 5/20/03	DATE SHIPPED:
CYLINDER SIZE: 100 mm X 200 mm			

TEST SPECIMENS AT DAYS INDICATED

A. 7	B. 28	C. 28	D. 28	E.	F.	G.	H.

MIX DESIGN	LAB or I.D. NO	DESIGN NUMBER	DESIGN CEMENT + FLYASH + SILICA CONTENT	FREE (SURFACE) MOISTURE COARSE	#2	SAND
	03-001160	3126106	350 kg/m³	0.70 %	0.40 %	4.20 %

FIELD TEST RESULTS	CONCRETE TEMP	SLUMP	AIR CONTENT	UNIT WEIGHT	CEMENT + ASH + SILICA CONTENT	FIELD W/C RATIO
	22 °C	121 mm	5 %	2271 kg/m³	360 kg/m³	0.39 BY WT.

ADDITIVES	CEMENT	FLYASH	SILICA	COARSE	#2	SAND	WATER
17094 Ml	1982 kg	494 kg	0 kg	5466 kg	1347 kg	5624 kg	681 L

INITIAL CURE OF CYLINDERS	LOW TEMP.	HIGH TEMP.	AMBIENT TEMP.	POT CALIBRATION	NET WEIGHT	CURING	CAPPING	WATER AT JOB
	°C	°C	25.6 °C	0.007067	16.05			0 L

REMARKS

Added 42 liquid ounces per yard of RHEO 1000 Super Plastisizer. Rejected 1st truck over time limit and out of spec. on air content. Informed contractor and ODOT onsite inspector of this action.

[X] QUALITY CONTROL [ ] VERIFICATION [ ] INFORMATION PHONE NUMBER: 541-889-3602

CERTIFIED TECHNICIAN (PLEASE PRINT) AND CARD NUMBER	COMPANY NAME AND CREW NUMBER	SIGNATURE	DATE
Randy G. Crum #43262	Materials Testing & Inspect	Randy	5/20/03

LAB USE ONLY BELOW

CYLINDER ID	DATE OF BREAK	AGE DAYS	MAXIMUM LOAD	CYLINDER AREA	STRENGTH MPa	TYPE OF FRACTURE	REMARKS
24 A	27-May	7	57100	1250	31.49	A	R 5-27-03
25 B	17-Jun	28	83560		46.09	A	R. Roberts 6-17-03
26 C	17-Jun	28	82230		43.36	A	R. Roberts 6-17-03
27 D	17-Jun	28	85530		47.18	A	R. Roberts 6-17-03
E							
F							
G							
H							

AVE 28 DAY 45.54 MPa [X] PASS [ ] FAIL

COMMENTS (WHEN MATERIAL, CYLINDERS OR DATA RECEIVED)

Location of pier #4 is 0+725

[ ] QUALITY CONTROL [ ] VERIFICATION CYLINDERS REC'D 21-May DATA SHEET RECD 20-May

CERTIFIED TECHNICIAN (PLEASE PRINT) AND CARD NUMBER	COMPANY NAME & CREW	SIGNATURE	DATE
Randy G. Crum #094494	Materials Testing & Inspect	Randy	5/21/03

Rodney Roberts #42860

Randy Roberts

MAY 2 2003

5/21/03

5/22/03

4000 C 9-01

CONCRETE YIELD AND W/C RATIO WORKSHEET

PROJECT NAME (SECTION)					CONTRACT NUMBER
Snake River (nyssa) Bridge Section					12770
CONTRACTOR		PROJECT MANAGER			BID ITEM NUMBER
F.E. Ward / TBH & associate llc		Ric Young			56
CONCRETE SUPPLIER		SUBMITTED BY			QUANTITY REPRESENTED
I.C.C.O					55.05 m³
CONCRETE FOR USE IN (LOCATION OR PLACEMENT)		BRIDGE NUMBER		STRENGTH REQUIRED	
Bearing Device / Pier #4 (class 30)		19176		30 MPa 28 DAYS	
DATA SHEET NUMBER	SET NUMBER	DATE	BATCH NUMBER	BATCH SIZE	TRUCK NO & DRIVER
78108127	1	5/20/03	3126106	6.88.	56126 Charles L.

BATCH MASSES (kg)

CEMENT	1982	kg
FLYASH	494	kg
SILICA FUME	0	kg
COARSE AGG.	5466	kg
8 mm # 2	1347	kg
FINE AGG (SAND)	5624	kg
WATER BATCHED	681	L
WATER JOBSITE	0	L
TOTAL ADD WATER	681 L=	681 kg
ADMIXTURES (TOTAL m	17094 /1000	17 kg
TOTAL BATCH MASS	15611	kg

FIELD TESTS

AMBIENT	25.6	°C
CONCRETE	22.0	°C
SLUMP	121	mm
AIR	5.0	%
CYLINDER CURE	LOW ____ °C	HIGH ____ °C

AGG % FREE MOISTURE

COARSE	0.70	%
# 2	0.40	%
SAND	4.20	%

DENSITY

CONCRETE + POT 19.54 kg
- POT MASS 3.49 kg
CONCRETE MASS= 16.05 kg ÷ POT CALIBRATION 0.007067 = **2271** kg/m³

YIELD TOTAL BATCH MASS = 15611
DENSITY = 2271.02288 = **6.87** m³

CEMENT CONTENT CEMENT, FLYASH & SILICA = 2476
YIELD = 6.874036425 = **360** kg/m³

WATER CEMENT RATIO A. AGGREGATE FREE WATER (FREE MOISTURE FACTOR = % FREE MOISTURE DIVIDED BY 100. EG. : 5.5% = 0.055)

BATCH MASS - (BATCH MASS / (1+ FREE MOISTURE FACTOR)) =AGG. FREE WATER

W/C RATIO= TOTAL FREE WATER (A+B+C) / TOTAL CEMENT & FLYASH

COARSE	5466	- (	5466	/ 1+	0.0070	) =	38	kg
#2	1347	- (	1347	/ 1+	0.0040	) =	5	kg
SAND	5624	- (	5624	/ 1+	0.0420	) =	227	kg

A. AGGREGATE FREE WATER TOTAL = 270 kg
B. WATER ADDED AT PLANT&JOBSITE = 681 kg
C. ADMIXTURES ADDED = 17 kg

968 kg / 2476 kg = **0.39** = **W/C RATIO**

[X] QUALITY CONTROL [ ] VERIFICATION

CERTIFIED TECHNICIAN (PLEASE PRINT) AND CARD NUMBER	COMPANY NAME	SIGNATURE	DATE
Randy G. Crum #43262	Materials Testing & Inspect	Randy	5/20/03

RECEIVED MAY 21 2003

3573ws 9-01

30017

SAMPLE DATA SHEET FOR CONCRETE CYLINDERS

LABORATORY REPORT NUMBER	CON NO.	EXP. ACCT.	DATA SHEET NUMBER
PROJECT NAME (SECTION): Snake River (nyssa) Bridge Section			CONTRACT NUMBER: 12770
CONTRACTOR: F.E. Ward / TBH & Associate LLC	PROJECT MANAGER: RIC YOUNG		BID ITEM NUMBER: 56 .0
CONCRETE SUPPLIER: I.C.C.O.	SUBMITTED BY		QUANTITY REPRESENTED: 48.17 m³

CONCRETE FOR USE IN (LOCATION OR PLACEMENT): Bearing Device / PIER # 4 (class 30)			BRIDGE NUMBER: 19176	STRENGTH REQUIRED: 30 MPa 28 DAYS
REPRESENTED BY NO. OF CYLS.: 4	SET NUMBER: 1	DATE CAST: 6/10/03	DATE SHIPPED	CYLINDER SIZE: 100 mm X 200 mm

TEST SPECIMENS AT DAYS INDICATED

A.	B.	C.	D.	E.	F.	G.	H.
7	28	28	28				

MIX DESIGN	LAB or I.D. NO	DESIGN NUMBER	DESIGN CEMENT + FLYASH + SILICA CONTENT	FREE (SURFACE) MOISTURE COARSE	#2	SAND
	03-001160	3126108	350 kg/m³	0.60 %	0.50 %	3.80 %

FIELD TEST RESULTS	CONCRETE TEMP	SLUMP	AIR CONTENT	UNIT WEIGHT	CEMENT + ASH + SILICA CONTENT	FIELD W/C RATIO
	26.6 °C	194mm mm	7 %	2236 kg/m³	357 kg/m³	0.40 BY WT.

ADDITIVES	CEMENT	FLYASH	SILICA	COARSE	#2	SAND	WATER
17093 Ml	1978 kg	494 kg	0 kg	5466 kg	1334 kg	5466 kg	727 L

INITIAL CURE OF CYLINDERS	LOW TEMP.	HIGH TEMP.	AMBIENT TEMP.	POT CALIBRATION	NET WEIGHT	CURING	CAPPING	WATER AT JOB
	20.9 °C	24.2 °C	26.7 °C	0.007012	15.68			0 L

REMARKS

Added 42 liquid ounces per yard of RHEO 1000 Super Plastisizer. Rejected 1st truck over time limit and out of spec. [illegible] slump. Informed contractor and ODOT onsite inspector of this action.

[X] QUALITY CONTROL [X] VERIFICATION [ ] INFORMATION PHONE NUMBER: 541-889-3602

T 23 CERTIFIED TECHNICIAN (PLEASE PRINT) AND CARD NUMBER	COMPANY NAME AND CREW NUMBER	SIGNATURE	DATE
William B Russell #43106	Materials Testing & Inspect	[signature]	6-10-03

LAB USE ONLY BELOW

CYLINDER ID	DATE OF BREAK	AGE DAYS	MAXIMUM LOAD	CYLINDER AREA	STRENGTH MPa	TYPE OF FRACTURE	REMARKS
550A	17-Jun	7	48145	12.5	26.56	B	R. Roberts 6-17-03
551B	8-Jul	28	65485		36.23	A	R. Roberts 7-8-03
552C	8-Jul	28	66330		36.59	D	
553D	8-Jul	28	65480		36.12	A	
E							
F							
G							
H							

AVE 28 DAY 36.31 MPa [X] PASS [ ] FAIL

COMMENTS (WHEN MATERIAL, CYLINDERS OR DATA RECEIVED)

[X] QUALITY CONTROL [ ] VERIFICATION CYLINDERS REC'D DATA SHEET REC'D

T 23 CERTIFIED TECHNICIAN (PLEASE PRINT) AND CARD NUMBER	COMPANY NAME & CREW	SIGNATURE	DATE
Rodney Roberts #42860	Materials Testing & Inspect	[signature]	6-17-03

CONCRETE YIELD AND W/C RATIO WORKSHEET

PROJECT NAME (SECTION): Snake River (nyssa) Bridge Section			CONTRACT NUMBER: 12770
CONTRACTOR: F.E. Ward / TBH & associate llc	PROJECT MANAGER: Ric Young		BID ITEM NUMBER: 56
CONCRETE SUPPLIER: I.C.C.O	SUBMITTED BY:		QUANTITY REPRESENTED: 48.17 m³
CONCRETE FOR USE IN (LOCATION OR PLACEMENT): Bearing Device / Pier #1 (class 30)	BRIDGE NUMBER: 19176	STRENGTH REQUIRED: 30 MPa 28 DAYS	

DATA SHEET NUMBER	SET NUMBER	DATE	BATCH NUMBER	BATCH SIZE	TRUCK NO & DRIVER
78108429	1	6/10/2003	3126106	6.88	56128 Steve Whit

BATCH MASSES (kg)

CEMENT	1978	kg
FLYASH	494	kg
SILICA FUME	0	kg
COARSE AGG.	5466	kg
8 mm #2	1334	kg
FINE AGG (SAND)	5588	kg
WATER BATCHED	727	L
WATER JOBSITE	0	L
TOTAL ADD WATER	727 L = 727	kg
ADMIXTURES (TOTAL ml	17094 /1000 17	kg
TOTAL BATCH MASS	15604	kg

FIELD TESTS

AMBIENT	26.7	°C
CONCRETE	24.3	°C
SLUMP	184	mm
AIR	7.0	%
CYLINDER CURE LOW		°C
CYLINDER CURE HIGH		°C

AGG % FREE MOISTURE

COARSE	0.60	%
#2	0.50	%
SAND	3.80	%

DENSITY

CONCRETE + POT	19.02	kg			
- POT MASS	3.34	kg			
CONCRETE MASS=	15.68	kg	+ POT CALIBRATION 0.007012	=	2236 kg/m³

YIELD

TOTAL BATCH MASS	=	15604	
DENSITY	=	2236.166572	= 6.98 m³

CEMENT CONTENT

CEMENT, FLYASH & SILICA	=	2472	
YIELD	=	6.978055302	= 354 kg/m³

WATER CEMENT RATIO

A. AGGREGATE FREE WATER (FREE MOISTURE FACTOR = % FREE MOISTURE DIVIDED BY 100. EG.: 5.5% = 0.055)

BATCH MASS - (BATCH MASS / (1+ FREE MOISTURE FACTOR)) =AGG. FREE WATER

W/C RATIO= TOTAL FREE WATER (A+B+C) / TOTAL CEMENT & FLYASH

COARSE	5466	- (	5466	/ 1+	0.0060	) = 33 kg
#2	1334	- (	1334	/ 1+	0.0050	) = 7 kg
SAND	5588	- (	5588	/ 1+	0.0380	) = 205 kg

A. AGGREGATE FREE WATER TOTAL = 244 kg

B. WATER ADDED AT PLANT&JOBSITE = 727 kg

C. ADMIXTURES ADDED = 17 kg

988 kg / 2472 kg = 0.40 = W/C RATIO

[X] QUALITY CONTROL [ ] VERIFICATION

CERTIFIED TECHNICIAN (PLEASE PRINT) AND CARD NUMBER	COMPANY NAME	SIGNATURE	DATE
William B Russell # 43106	Materials Testing & Inspect		6-11-03

3573ws 9-01

OREGON DEPARTMENT OF TRANSPORTATION
MATERIALS LABORATORY
800 AIRPORT RD. SE SALEM, OR 97301-4798

(503)986-3100
FAX(503)986-3096

Contract No.: C12770 **EA No.: CON01479** **Lab No.: 03-003071**
Project: SNAKE RIVER (NYSSA) BRIDGE
Highway: CENTRAL OREGON County: MALHEUR **Data Sheet No.: F0536 117**
Contractor: F.E. WARD INC FA No.: X-BHF-STP-S007(32)
Project Manager: RIC YOUNG Org Unit: 5804 Bid Item No.: 56
Submitted By: ROBERT KERR Org Unit: 5000 Sample No.: 1
Material Source: IDAHO CONCRETE COMPANY Qty Represented: 10% QA/QC TESTING
Field Tests By : ROBERT KERR Cylinders By : ROBERT KERR Witnessed By:
DATE-Sampled: 03/ 6/10 Received: 03/ 6/13 Tested: 03/ 7/ 8 Reported: JUL 16 2003
Type of Test: Verification **Use: PIER # 1, BRIDGE # 18776**

CONCRETE CYLINDER TEST REPORT

CYLINDER SET INFORMATION

Set Number :	1	Slump :	165 mm
Number of Cylinders :	3	Air Content :	6.0 %
Cylinder Size :	100mm x 200mm	Unit Weight :	2236 kg/m3
Strength Required :	30.0 MPa in 28 Days	Water/Cement Ratio :	0.40
Cement + Flyash :	354 kg/m3	Concrete Temperature :	26.8 °C

MIX DESIGN

Materials Lab ID No. : 30.0 MPA
Contractors ID No. :
Design Strength (MPa) : Unknown
Type of Concrete : Flyash

LAB RESULTS

Cylinder ID No.	Date Tested	Cylinder Age (days)	Area (mm2)	Strength (MPa)	Lab Remarks
A	03/ 7/ 8	28	8107	33.5	
B	03/ 7/ 8	28	8107	38.8	
C	03/ 7/ 8	28	8107	38.6	

Average Strength : 38.7 MPa **5612 psi**

Specimens tested in accordance with AASHTO T22/ASTM C39

719X =$ 0.

TOTAL CHARGES: $ 0.00

REMARKS:
Concrete represented by these cylinders **DOES** meet required strength.
Amended lab report so as to indicate that cyl. "A" thrown out because it is more then 10% below the average break strength of the other two cylinders.
*

REPORT SHALL NOT BE REPRODUCED, EXCEPT IN FULL, WITHOUT WRITTEN APPROVAL OF THIS LABORATORY.

C: FILES ; PROJ MGR: RIC YOUNG ; REG 5 Q.A.C. ; F.E. WARD INC
IDAHO CONCRETE COMPANY ; FHWA ; CONSTRUCTION - R KESSLER

Bob Pappa, PE, PLS
Interim State Construction And Materials Engineer

SAMPLE DATA SHEET FOR CONCRETE CYLINDERS

LABORATORY REPORT NUMBER	CON NO.	EXP. ACCT.	DATA SHEET NUMBER
			F- -

PROJECT NAME (SECTION)	CONTRACT NUMBER
Snake River (nyssa) Bridge Section	12770

CONTRACTOR	PROJECT MANAGER	BID ITEM NUMBER
F.E. Ward / TBH & Associate LLC	RIC YOUNG	56
CONCRETE SUPPLIER	**SUBMITTED BY**	**QUANTITY REPRESENTED**
I.C.C.O.		55.04 m³

CONCRETE FOR USE IN (LOCATION OR PLACEMENT)	BRIDGE NUMBER	STRENGTH REQUIRED
Bearing Device / PIER # 2 (class 30)	19176	30 MPa 28 DAYS

REPRESENTED BY NO. OF CYLS.	SET NUMBER	DATE CAST	DATE SHIPPED	CYLINDER SIZE
4	1	6/18/03		100 mm X 200 mm

TEST SPECIMENS AT DAYS INDICATED

A.	B.	C.	D.	E.	F.	G.	H.
7	28	28	28				

MIX DESIGN	LAB or I.D. NO	DESIGN NUMBER	DESIGN CEMENT + FLYASH + SILICA CONTENT	FREE (SURFACE) MOISTURE COARSE	#2	SAND
	03-001160	3126106	350 kg/m³	0.50 %	0.40 %	3.20 %

FIELD TEST RESULTS	CONCRETE TEMP	SLUMP	AIR CONTENT	UNIT WEIGHT	CEMENT + ASH + SILICA CONTENT	FIELD W/C RATIO
	27.4 °C	205 mm	5.8 %	2280 kg/m³	362 kg/m³	0.39 BY WT.

ADDITIVES	CEMENT	FLYASH	SILICA	COARSE	#2	SAND	WATER
17389 Ml	1982 kg	492 kg	0 kg	5457 kg	1329 kg	5557 kg	753 L

INITIAL CURE OF CYLINDERS	LOW TEMP.	HIGH TEMP.	AMBIENT TEMP.	POT CALIBRATION	NET WEIGHT	CURING	CAPPING	WATER AT JOB
	°C	°C	31.2 °C	0.007067	16.11			0 L

REMARKS

Added 36 liquid ounces per yard of RHEO 1000 Super Plastisizer. 1st truck out of spec. on air content. Informed contractor and ODOT QCCS Eric Knapp he accepted load and allowed contractor to pour concrete.

[X] QUALITY CONTROL [ ] VERIFICATION [ ] INFORMATION PHONE NUMBER: 541-889-3602

T 23 CERTIFIED TECHNICIAN (PLEASE PRINT) AND CARD NUMBER	COMPANY NAME AND CREW NUMBER	SIGNATURE	DATE
Randy G. Crum	Materials Testing & Inspect	Randy Crum	6/18/03

LAB USE ONLY BELOW

CYLINDER ID	DATE OF BREAK	AGE DAYS	MAXIMUM LOAD	CYLINDER AREA	STRENGTH MPa	TYPE OF FRACTURE	REMARKS
641 A	25-Jun	7	48145	12.5	26.56	A	R Roberts 6-25-03
642 B	16-Jul	28	52031	"	28.03	A	
643 C	16-Jul	28	57000	"	29.31	A	
644 D	16-Jul	28	49003	"	27.11	D	
E							
F							
G							
H							

FAILED

AVE 28 DAY 28.15 MPa [ ] PASS [ ] FAIL

COMMENTS (WHEN MATERIAL ,CYLINDERS OR DATA RECEIVED)

RECEIVED

[X] QUALITY CONTROL [ ] VERIFICATION CYLINDERS REC'D DATA SHEET RECD

T 22 CERTIFIED TECHNICIAN (PLEASE PRINT) AND CARD NUMBER	COMPANY NAME & CREW	SIGNATURE	DATE
Randy Crum #094494	Materials Testing & Inspect	Randy Crum	6-19-03

JUN 19 2003

OFFICE OF PROJECT MANAGER
ONTARIO, OREGON
[ ] P.M. [ ] A.P.M. [ ] O.M. [ ] C.S

4000 C 9-01

SAMPLE DATA AND LABORATORY TEST REPORT OF CONCRETE CYLINDERS

LABORATORY NO.	
PROJECT: LAKE RIVER (NYSSA) BRIDGE SECTION	DATA SHEET NO.
HIGHWAY: Central Oregon	COUNTY: Malheur,Canyon
E.A. SUBJOB: C12770	
CONTRACTOR: F. E. Ward / TBH & Associates	FA PROJECT NO.: X-BHF-STP-S007
BID ITEM NO: 0570	
PROJECT MANAGER: Ric Young	AGY. ORG. UNIT: 5804
SUBMITTED BY: William Russell	AGY. ORG. UNIT:

QTY.	TEST NUMBER	VAR	LAB CHARGE

SAMPLE DATA

CONCRETE FOR USE IN (LOCATION OR PLACEMENT): Concrete Bridge End Panels	BRIDGE NO.: 19176	STRENGTH REQUIRED: 30 kg/cm² 28 DAY	
CONCRETE SUPPLIER: I.C.C.O. (Idaho Concrete)		FIELD TESTS BY: William Russell (MTI)	
REPRESENTED BY: NO. OF CYLINDER - 4	SET NO.: 5	DATE CAST: 8-27-03	DATE SHIPPED: 8-28-03
CYLINDERS MADE BY: William Russell (MTI)			

TEST SPECIMENS AT DAYS INDICATED

A. 7	B. 28	C. 28	D. 28	E.	F.	G.	H.

SIGNATURE OF RECORD WITNESS

CEMENT	BRAND & TYPE	LAB OR MILL ANALYSIS NO.	ADMIXTURES	BRAND	TYPE

MIX DESIGN	LAB OR I.D. NO.	DESIGN	DESIGN CEMENT + FLYASH CONTENT	FIELD TEST RESULTS	FREE (SURFACE) MOISTURE %
	03-001160	3126106	350 kg/m³		37.5-19mm 0.6 19-4.75mm 0.50 F.A. 3.80

FIELD TEST RESULTS	CONCRETE TEMP.	SLUMP	AIR CONTENT	UNIT WEIGHT	CEMENT + FLYASH CONTENT	FIELD W/C RATIO
	26.6 °C	194 cm.	7 %	2,236.0 kg/m³	357 kg/m³	0.40 BY WT.

CONCRETE BATCH WEIGHTS

ADDITIVES	CEMENT	FLYASH	37.5-19mm AGG	19-4.75mm	SAND	WATER	WATER AT JOB
17093 g	1978 kg	494 kg	5466 kg	1334 kg	5466 kg	727 l	0 l

INITIAL CURE OF CYLINDERS	LOW TEMP	HIGH TEMP	AMBIENT TEMP		QUANTITY REPRESENTED BY SAMPLE
	20.9 °C	24.2 °C		26.7 °C	37.6 m³

FIELD REMARKS

LAB USE ONLY BELOW

LABORATORY REPORT — TESTED ACCORDING TO AASHTO T 22 (ASTM C39)

DATE DATA SHEET RECEIVED | DATE CYLINDERS RECEIVED

CYL ID	DATE OF BREAK	AGE DAYS	STRENGTH kg/m³	DATE REPORTED	LAB REMARKS: INCLUDE MAX. LOAD, AVG. DIAM. AREA AND OBSERVED DEFECTS FOR FAILING
A	9-2-03	7	26.56		
B	9-16-03	28	37.21		
C	9-16-03	↓	36.49		
D	9-16-03	↓	35.10		
E					
F					
G					
H					
		AVE.	36.27	28 DAYS	

DISTRIBUTION ONLY:

RESULTS: ☐ PASS ☐ FAIL

INSTRUCTIONS: FORWARD ORIGINAL TO MATERIALS LABORATORY SALEM, COPY TO PROJECT MANAGER, ORIGINATOR RETAIN A COPY.

MANAGER

CERTIFIED TECHNICIAN (PLEASE PRINT)		COMPANY NAME	SIGNATURE	DATE
William Russell	☒ QUALITY CONTROL ☐ VERIFICATION ☐ INDEPENDENT ASSURANCE	MTI	William Russell	9-16-03

734-3573M (9-97)

CONCRETE YIELD AND W/C RATIO WORKSHEET (METRIC)

PROJECT: SNAKE RIVER (Nyssa) BRIDGE SECTION	CONTRACT No.: C12770	DATA SHEET NO.: 30017
CONCRETE SUPPLIER: ICCO	MIX DESIGN NO.: 3126106	STRENGTH: 30 MPa
PLACEMENT: CONCRETE BRIDGE END PANELS	TECHNICIAN: William Russell	☒ QUALITY CONTROL ☐ VERIFICATION ☐ INDEPENDENT ASSURANCE

TRUCK NO.	DATE	COMPANY	PROJECT MANAGER	BID ITEM
56129	8/28/03	Steve Witt	Ric Young	0570

BATCH MASSES (kg)

CEMENT	1,978	kg
FLYASH	494	kg
OTHER (MICRO SILICA)	0	kg
COARSE AGG. #1	5,466	kg
COARSE AGG. #2	1,334	kg
FINE AGG (SAND)	5,588	kg

WATER BATCHED	727	L	
WATER JOBSITE	0	L	
TOTAL ADD WATER	727	L =	727 kg
ADMIXTURES (TOTAL ml)	17,094	/ 1000 =	17 kg

TOTAL BATCH MASS 15,604 kg

FIELD TESTS

AMBIENT TEMP.:	27	DEG. C
CONC. TEMP	24.3	F C
SLUMP	184	mm
AIR	7.0	%
CYLINDER CURE TEMP.:	LOW 21	HIGH 24

AGG % FREE MOISTURE

COARSE #1	0.60	%
COARSE #2	0.50	%
SAND	3.80	%

DENSITY

CONCRETE + POT	19.02	kg
- POT MASS	3.34	kg
CONCRETE MASS =	15.68 kg X POT CALIB. 0.01	= 0 kg/m³

YIELD TOTAL BATCH MASS / DENSITY = 15,604 / 0 = 141,922.28 m³

CEMENT CONTENT TOTAL CEMENTITIOUS MATERIAL / YIELD = 2,472 / 141,922.28 = 0 kg/m³

WATER CEMENT RATIO: A. AGGREGATE FREE WATER (FREE MOISTURE FACTOR = % FREE MOISTURE DIVIDED BY 100. EG.: 5.5% = 0.055)

$$\text{BATCH MASS} - \left(\frac{\text{BATCH MASS}}{(1 + \text{FREE MOISTURE FACTOR})}\right) = \text{AGG. FREE WATER}$$

CA # 1	5,466	- (	5,466	/ 1 +	0.006	) =	32.60	kg
CA # 2	1,334	- (	1,334	/ 1 +	0.005	) =	6.64	kg
SAND	5,588	- (	5,588	/ 1 +	0.038	) =	204.57	kg

A. AGGREGATE FREE WATER TOTAL =	243.81	kg
B. WATER ADDED AT PLANT & JOBSITE =	727.00	kg
C. ADMIXTURES ADDED =	17.09	kg

WATER CEMENT RATIO = TOTAL FREE WATER (A+B+C) / TOTAL CEMENTITIOUS MATERIAL = 987.90 / 2,472.00 kg = **0.40**

This sheet

was intentionally

left blank.

TEST SUMMARY (B) - QA
(Field Tested Concrete Materials)

CONTRACT NO.	SHEET
C12770	10-D

REVIEWERS AND DATES	CLASS OF CONCRETE:	ORIG. QUANTITY	FINAL QUANTITY
	BI 550 - STRUCTURAL CONCRETE, CLASS 25 *(Estimated quantity = 55m³)*	100% LS	

TESTING FREQUENCIES:
- SAMPLING, AIR CONTENT, SLUMP & CONCRETE TEMP. = 1 PER EACH SET OF CYLINDERS
- STRENGTH: >20m³ = 1 Set/ 20³ . 20 - 75 m³ = 1 Set / Day. 75 - 450 m³ = 1 Set / 75m³. Over 450 m³ = 1 Set / 150 m³. (TESTING IS PER DAILY PRODUCTION)

DATE MATERIAL PLACED	BID ITEM NUMBER	DESCRIPTION OF WORK (curb, inlet, etc.)	QUANTITY PLACED	ACCUMULATIVE QUANTITY	MIX DESIGN #	TEST METHOD AND FREQUENCY: REGION - QUALITY VERIFICATION	LAB REPORT NO.	CYLINDERS Y or N?	AIR CONTENT	SLUMP	W/C RATIO / YIELD	TEMPERATURE	DENSITY	BREAK RESULTS	ADJUSTMENT FOR NON-COMPLIANCE MATERIALS? Y or N	COMMENTS
1/10/2003		Mix Design			ICCO 3125610		03-000061									Class 30 Concrete Mix Design
8/15/03	550	Bent 1 Spread Footing	48.00	48.00				Y	Y	Y	Y	Y	Y	**39.75**		
8/15/03	550	Bent 1 Spread Footing	0.00	48.00		**V-1**	03-003852	Y	Y	Y	Y	Y	Y	**41.4**		Does Comply

This sheet

was intentionally

left blank.

OREGON DEPARTMENT OF TRANSPORTATION
MATERIALS LABORATORY
800 AIRPORT RD. SE SALEM, OR 97301-4798
(503)986-3100
FAX(503)986-3096

Contract No.: **EA No.: IN7872** **Lab No.: 03-000061**
Project: CONCRETE MIX DESIGN- STRUCTURAL CLASS 25
Highway: County: **Data Sheet No.: NONE**
Contractor: FA No.:
Project Manager: Org Unit: Bid Item No.:
Submitted By: ERIC KNAPP Org Unit: Sample No.: NA
Material Source: IDAHO CONCRETE COMPANY Qty Represented: NA APR 0 4 2003
DATE-Sampled: NA Received: 03/ 1/10 Tested: 03/ 1/10 Reported:
Type of Test: Mix Design Review - Structural **Use: Class 25.0-19.0 mm - Class 3620 psi**

REVIEW OF CONTRACTOR CONCRETE MIX DESIGN - TM 741x

Mix Producer: IDAHO CONCRETE COMPANY Contractor Mix Design No.: ICCO 3125610

The request to review Structural Class 25 concrete mix design was evaluated according to the 1996 Standard Specifications.

Average Compressive Strength: 37.7 MPa @ 28 days

Based on a review of the mix proportions and the available data it has been determined that the mix design complies with the specifications. This mix design is an adjustment of a previously approved mix design based upon changes in specific gravities. The mix design is approved for use on ODOT projects for use in accordance with and as allowed by project Special Provisions for one year.
The 9.5-2.36 mm size aggregates meets the 2002 Standard Specifications. Amend contract by Contract Change Order as necessary.

Mix proportions as submitted by IDAHO CONCRETE COMPANY :

Cement	280 kg/m3	ASH GROVE			Type I Durkee	
Fly Ash	70 kg/m3	ISG			Class F Centralia	
19-9.5	831 kg/m3 SSD	Gssd : 2.614	Abs : 1.7 %		Source : 23-133-5	
9.5-2.36	162 kg/m3 SSD	Gssd : 2.614	Abs : 1.7 %		Source : 23-133-5	
4.75-0	822 kg/m3 SSD	Gssd : 2.640	Abs : 1.4 %		Source : 23-133-5	FM : 2.76
Water	139 kg/m3	W/C Ratio : 0.40			Slump : 125 mm	
Air Content	5.0 %					
Density	2304 kg/m3					

Air Entrainment Agent : Mstr Bldrs/AE-90
Water Reducer : Mstr Bldrs/Prokrete-N

This report does not supersede, delete or amend the project specifications. Our review of this mix design does not relieve the Contractor of the responsibility to produce satisfactory concrete.

41X =$ 0.

TOTAL CHARGES: $ 0.00

REMARKS:
Mix Design **DOES** comply with specifications.

*

REPORT SHALL NOT BE REPRODUCED, EXCEPT IN FULL, WITHOUT WRITTEN APPROVAL OF THIS LABORATORY.

FILES ; R. KESSLER-CONSTRUCTION ; IDAHO CONCRETE COMPANY
AS 5; QAC 5; PM YOUNG

Kenneth L Stoneman
STATE CONSTRUCTION AND MATERIALS ENGINEER

CONCRETE YIELD AND W/C RATIO WORKSHEET

PROJECT: SNAKE RIVER (NYSSA) BRIDGE	CONTRACT: C12770	DATA SHEET NO.: 927699-0815
CONCRETE SUPPLIER: IDAHO CONCRETE	MIX DESIGN NO.: 3125610	STRENGTH: 25 Mpa @ 28 DAYS
PLACEMENT: BENT 1 SPREAD FTG.	TECHNICIAN: ROBERT HEIMDAHL	☒ QUALITY CONTROL ☐ VERIFICATION ☐ INDEPENDENT ASSURANCE

TRUCK NO.	DATE	COMPANY	PROJECT MANAGER	BID ITEM
56112	8/15/03	KT CONTRACTING	RIC YOUNG	0550

BATCH MASSES (kg)

CEMENT	1882.4	kg
FLYASH	464.9	kg
SILICA FUME	—	kg
COARSE AGG.	5420.4	kg
# 2	1360.8	kg
FINE AGG (SAND)	5529.3	kg
WATER BATCHED	863.1	L
WATER JOBSITE	—	L
TOTAL ADD WATER	L= 863.1	kg
ADMIXTURES (TOTAL m 4318	/1000 4.5	kg
TOTAL BATCH MASS	15525.2	kg

FIELD TESTS

AMBIENT	24.5	°C
CONCRETE	27.0	°C
SLUMP	90	mm
AIR	4.9	%

CYLINDER CURE	LOW	HIGH
	°C	°C

AGG % FREE MOISTURE

COARSE	1.6	%
# 2	2.0	%
SAND	0.1	%

DENSITY

CONCRETE + POT	19.740	kg
- POT MASS	3.740	kg
CONCRETE MASS=	16.00	kg

- POT CALIBRATION .0070731 = 2262 kg/m³

YIELD

TOTAL BATCH MASS = 2262.085 / DENSITY = 15525.2 = 6.9 m³

CEMENT CONTENT

CEMENT, FLYASH & SILICA = 2347.3 / YIELD = 6.865 = 342 kg/m³

WATER CEMENT RATIO

A AGGREGATE FREE WATER (FREE MOISTURE FACTOR = % FREE MOISTURE DIVIDED BY 100 EG.: 5.5% = 0.055)

BATCH MASS - (BATCH MASS / (1+ FREE MOISTURE FACTOR)) =AGG. FREE WATER

W/C RATIO= TOTAL FREE WATER (A+B+C) / TOTAL CEMENT & FLYASH

COARSE	5420 - 1361	(5420 / 1+ .016)	= 85.4	kg
#2	5529 -	(1361 / 1+ .02)	= 26.7	kg
SAND		(5529 / 1+ .001)	= 5.5	kg

A. AGGREGATE FREE WATER TOTAL = kg

B. WATER ADDED AT PLANT&JOBSITE = 863.1 kg

C. ADMIXTURES ADDED = 4.5 kg

985 / 2347.3 kg = 0.42 = W/C RATIO

☐ QUALITY CONTROL ☐ VERIFICATION

CERTIFIED TECHNICIAN NAME AND CARD NUMBER	COMPANY NAME	SIGNATURE	DATE
927699	KT Cont.	[signature]	8-11-03

3573ws 9-01

Oregon Department of Transportation

SAMPLE DATA AND LABORATORY TEST REPORT OF CONCRETE CYLINDERS

LABORATORY NO.	
PROJECT: SNAKE RIVER (NYSSA) BRIDGE	DATA SHEET NO. 927699-0815
HIGHWAY: CENTRAL OREGON HWY / COUNTY: MALHEUR/CANYON	E.A. SUBJOB: CON01479
CONTRACTOR: F. E. WARD, INC.	FA PROJECT NO. (32) X-BHF-STP-S007 / BID ITEM NO 0550
PROJECT MANAGER: RIC YOUNG	AGY. ORG. UNIT / QTY. / TEST NUMBER / VAR / LAB CHARGE
SUBMITTED BY: KT CONTRACTING	AGY. ORG. UNIT

SAMPLE DATA.

CONCRETE FOR USE IN (LOCATION OR PLACEMENT): TENT SPREAD FOOTING	BRIDGE NO. 18724	STRENGTH REQUIRED 25 MPa 28 DAY	
CONCRETE SUPPLIER: IDAHO CONCRETE Co. 8-15-02		FIELD TESTS BY: R.B. [illegible]	
REPRESENTED BY / NO. OF CYLINDER - 4	SET NO. KT-A	DATE CAST 8-15-02	DATE SHIPPED
QCT (PLEASE PRINT)			
TEST SPECIMENS AT DAYS INDICATED: A. 7d B. 28 C. 28 D. 28 E. F. G. H.		QCT SIGNATURE [illegible]	
NET WEIGHT 16.00	POT CALIBRATION 141.38		

MIX DESIGN	LAB OR I.D. NO.	DESIGN	DESIGN CEMENT + FLYASH CONTENT	FIELD TEST RESULTS	FREE (SURFACE) MOISTURE % 37.5-19mm / 19-4.75mm / F.A.
	4251	3125610	340 kg/m³		

FIELD TEST RESULTS	CONCRETE TEMP.	SLUMP	AIR CONTENT	UNIT WEIGHT	CEMENT + FLYASH CONTENT	FIELD W/C RATIO
	27 °C	90 mm	4.9 %	2262 kg/m³	342 kg/m³	0.42 BY WT.

CONCRETE BATCH WEIGHTS

ADDITIVES	CEMENT	FLYASH	37.5 - 19mm	19 - 4.75mm	SAND	WATER	WATER AT JOB
12 mL	1882 kg	465 kg	kg	5420 + 136 kg	5529 kg	213 L	— L

INITIAL CURE OF CYLINDERS	LOW TEMP	HIGH TEMP	AMBIENT TEMP	QUANTITY REPRESENTED BY SAMPLE
	22.2 °C	26.7 °C	24.5 °C	48 m³

FIELD REMARKS

LAB USE ONLY BELOW

LABORATORY REPORT — TESTED ACCORDING TO AASHTO T 22 (ASTM C39)

DATE DATA SHEET RECEIVED: 8-16 — DATE CYLINDERS RECEIVED: 8-16

CYL.ID	DATE OF BREAK	AGE DAYS	STRENGTH MPa	DATE REPORTED	LAB REMARKS: INCLUDE MAX. LOAD, AVG. DIAM. AREA AND OBSERVED DEFECTS FOR FAILING
A	8-22	7	27.66	(C) 8-23	50440 - Failure load
B	9-12	28	40.67	(C) 9-12	71790 - " "
C	9-12	28	39.81	(C) 9-12	70275 - " "
D	9-12	28	38.77	(C) 9-12	68450 - " "
E					
F					
G					
H					
		AVE.	39.75	28 DAYS	

DISTRIBUTION ONLY:

RECEIVED

SEP 12 2003

OFFICE OF PROJECT MANAGER
ONTARIO, OREGON

RESULTS: ☑ PASS ☐ FAIL

INSTRUCTIONS: COPY TO PROJECT MANAGER
ORIGINATOR RETAIN A COPY.

LAB MANAGER

TECHNICIAN (PLEASE PRINT)		COMPANY NAME	SIGNATURE	DATE
Randy G. Crum	☑ QUALITY CONTROL ☐ VERIFICATION ☐ INDEPENDENT ASSURANCE	☑ M.A.M. ☐ A.P.M. ☐ O.M. ☐ C.S	Randy [illegible]	8/22/03

734-3573 (2/98)

094494

9-12-03

Randy [illegible] 9/12/03

CONCRETE YIELD AND W/C RATIO WORKSHEET

PROJECT: SNAKE RIVER (NYSSA) BRIDGE	CONTRACT: C12770	DATA SHEET NO.: F865-166
CONCRETE SUPPLIER: IDAHO CONCRETE	MIX DESIGN NO.: 3125610	STRENGTH: 25 Mpa @ 28 DAYS
PLACEMENT: FOOTING - BENT 1	TECHNICIAN: MARK SANGER	☐ QUALITY CONTROL ☒ VERIFICATION ☐ INDEPENDENT ASSURANCE

TRUCK NO.	DATE	COMPANY	PROJECT MANAGER	BID ITEM
56112	8/15/03	ODOT	RIC YOUNG	0550

BATCH MASSES (kg)

CEMENT 1882 kg
FLYASH 465 kg
SILICA FUME kg
COARSE AGG. 5420 kg
3/8 #2 1361 kg
FINE AGG (SAND) 5529 kg
WATER BATCHED 863 L
WATER JOBSITE L
TOTAL ADD WATER 863 L= 863 kg
ADMIXTURES (TOTAL m 4318 /1000 4 kg

TOTAL BATCH MASS 15524 kg

FIELD TESTS

AMBIENT 22 °C
CONCRETE 27.6 °C
SLUMP 90 mm
AIR 4.8 %
CYLINDER CURE LOW 16.5 °C HIGH 19.7 °C

AGG % FREE MOISTURE
COARSE 1.6 %
3/8 #2 0.1 %
SAND 2.0 %

DENSITY

CONCRETE + POT 18.488 kg
- POT MASS 2.484 kg
CONCRETE MASS= 16.004 kg ÷ POT CALIBRATION .007074 = 2262 kg/m³

YIELD

TOTAL BATCH MASS = 15524
DENSITY = 2262 = 6.9 m³

CEMENT CONTENT

CEMENT, FLYASH & SILICA = 2347
YIELD = 6.9 = 340 kg/m³

WATER CEMENT RATIO

A. AGGREGATE FREE WATER (FREE MOISTURE FACTOR = % FREE MOISTURE DIVIDED BY 100. EG.: 5.6% = 0.056)

BATCH MASS - (BATCH MASS / (1+ FREE MOISTURE FACTOR)) =AGG. FREE WATER

W/C RATIO= TOTAL FREE WATER (A+B+C) / TOTAL CEMENT & FLYASH

COARSE 5420 -(5420 /1+ .016) = 85 kg
3/8 #2 1361 -(1361 /1+ .02) = 27 kg
SAND 5529 -(5529 /1+ .001) = 6 kg

A. AGGREGATE FREE WATER TOTAL = 118 kg
B. WATER ADDED AT PLANT&JOBSITE = 863 kg
C. ADMIXTURES ADDED = 4 kg

985 kg / 2347 kg = .42 = W/C RATIO

☐ QUALITY CONTROL ☑ VERIFICATION

CERTIFIED TECHNICIAN (PLEASE PRINT) AND CARD NUMBER	COMPANY NAME	SIGNATURE	DATE
MARK SANGER 865	HWY. DIV.	Mark Sanger	8/15/03

3573ws 9-91

8-19-03
IA/ Verif does Comply -

OREGON DEPARTMENT OF TRANSPORTATION
MATERIALS LABORATORY
800 AIRPORT RD. SE SALEM, OR 97301-4798
(503)986-3100
FAX(503)986-3096

Contract No.: C12770 **EA No.:** CON01479 **Lab No.:** 03-003852
Project: SNAKE RIVER (NYSSA) BRIDGE SECTION
Highway: CENTRAL OREGON HWY **County:** MALHEUR **Data Sheet No.:** F0865 166
Contractor: F. E. WARD, INC **FA No.:** X-BHF-STP-S007(32)
Project Manager: RIC YOUNG **Org Unit:** 5804 **Bid Item No.:** 0550
Submitted By: MARK SANGER **Org Unit:** 5000 **Sample No.:** V-1
Material Source: IDAHO CONCRETE CO **Qty Represented:** 10% QA/QC TESTS
Field Tests By : MARK SANGER **Cylinders By :** MARK SANGER **Witnessed By:**
DATE-Sampled: 03/ 8/15 **Received:** 03/ 8/19 **Tested:** 03/ 9/12 **Reported:** SEP 13 2003
Type of Test: Verification **Use:** BENT 1 FOOTING, BRIDGE # 18724

CONCRETE CYLINDER TEST REPORT

CYLINDER SET INFORMATION

Set Number :	V-1	Slump :	90 mm
Number of Cylinders :	3	Air Content :	4.8 %
Cylinder Size :	100mm x 200mm	Unit Weight :	2262 kg/m3
Strength Required :	25.0 MPa in 28 Days	Water/Cement Ratio :	0.42
Cement + Flyash :	340 kg/m3	Concrete Temperature :	27.6 °C

MIX DESIGN

Materials Lab ID No. : 01-004251
Contractors ID No. : ICC 3125610
Design Strength : 25.0 in 28 Days
Type of Concrete : Flyash

LAB RESULTS

Cylinder ID No.	Date Tested	Cylinder Age (days)	Area (mm2)	Strength (MPa)	Lab Remarks
A	03/ 9/12	28	8107	40.4	
B	03/ 9/12	28	8107	41.9	
C	03/ 9/12	28	8107	41.8	

Average Strength : 41.4 MPa 5999 psi

Specimens tested in accordance with AASHTO T22/ASTM C39

719X =$ 0.

TOTAL CHARGES: $ 0.00

REMARKS:
Concrete represented by these cylinders **DOES** meet required strength.

*

REPORT SHALL NOT BE REPRODUCED, EXCEPT IN FULL, WITHOUT WRITTEN APPROVAL OF THIS LABORATORY.

:: FILES ; PROJ MGR: RIC YOUNG ; RAS: 5 ; ROSS BROS & CO ; REG 5 QA COORDONATOR
IDAHO CONCRETE CO ; FHWA ; CONSTRUCTION - R KESSLER

Kenneth L Stone
CONSTRUCTION AND MATERIALS EXAMINER

This sheet

was intentionally

left blank.

Oregon Department of Transportation

TEST SUMMARY (A)

(NONFIELD TESTED MATERIALS)

CONTRACT NO.	SHEET
C12770	11

REVIEWERS AND DATES

LINE	DATE OF SAMPLE, TEST, OR INSPECTION	FIR REPORT NO.	DATA SHEET NO. OR MATERIALS LAB. "I" REPORT NO.	LAB REPORT NO.	TEST RESULTS CERTIFICATE	QUALITY COMPLIANCE CERTIFICATE	"Q" WITH MATERIALS "I" REPORT NO.	EQUIPMENT LISTS AND DRAWINGS	CERTIFICATE OF MATERIALS ORIGIN	0610 BEARING DEVICES, PIER 1	0620 BEARING DEVICES, PIER 2	0630 BEARING DEVICES, PIER 3	0640 BEARING DEVICES, PIER 4	0650 CLEAN BEARINGS	0660 27 mm ELECTRICAL CONDUIT	EXPLANATIONS AND NONCOMPLIANCE MATERIALS DESCRIPTION
										F,L	F,L	F,L	F,L	NDR	F,Q,O	
		F		L	T	Q	QI	E	O	INCORPORATED QUANTITIES						
1	See Notes									X	X	X	X			See BI 590, FIR #1 for Bearing Pad Docs.
2	See Notes									X	X	X	X			See BI 590, FIR #2 for APL Grout Docs.
3	7/10/03	1				X			X						10 m	Rigid Steel Conduit (also covers BI 67-68)
4																
5																
6																
7																
8																
9																
10																
11																
12																
13																
14																
15																
16																
17																
18																
19																
20																

ITEM NO.	UNIT	ORIGINAL QUANTITY	FINAL QUANTITY
0610	EA	4	
0620	EA	2	
0630	EA	2	
0640	EA	4	
0650	EA	4	
0660	M	3	

734-1902-A (10-01)

This sheet

was intentionally

left blank.

LTV COPPERWELD

PIPE & CONDUIT GROUP
1315 Albert Street • P.O. Box 1000 • Youngstown, OH 44501-1000
330-742-6000 • Fax 330-742-6033

March 13, 2001

To Whom It May Concern:

CERTIFICATION OF ORIGIN AND COMPLIANCE

LTV Steel, formerly Republic Steel, is a fully-integrated domestic supplier of steel products.

All steel utilized for the production of Intermediate Metal Conduit (IMC), Rigid Steel Conduit, and Electrical Metallic Tubing (EMT) is melted in the United States. Such products are then welded, galvanized and fully finished entirely in facilities located in the United States.

Additionally, this is to certify that electrical conduit produced and sold by LTV Copperweld is manufactured to the following Industry and Federal standards:

	FEDERAL	ANSI	UNDERWRITER
IMC	WW-C-581e	C80.6	UL 1242
RIGID	WW-C-581e	C80.1	UL 6
EMT	WW-C-563	C80.3	UL 797

Although our products meet the requirements of the above listed Federal specification, we have been advised that this specification has been withdrawn. This was done in keeping with Government policy to utilize industry standards such as the ANSI and UL specifications where and when applicable.

If I can be of any additional assistance, please feel free to call me.

Sincerely,

James R. Burnham
Manager, Electrical Administration

STATE OF OHIO
COUNTY OF MAHONING

Subscribed and sworn to before me this March 13, 2001.

Suzanne P. Randall, Notary Public
My commission expires April 9, 2001

Oregon Department of Transportation

FIELD INSPECTION

CONTRACT NO. 12770	REPORT NO. 1	FOR BID ITEM NO 66-68
MANUAFACTURER OR SUPPLIER: LTV COPPERWELD	BID ITEM NAME: 27mm CONDUIT	
QUANTITY DELIVERED: 10 M	QUANTITY ACCEPTED: 10 M	QUANTITY REJECTED / EXPLAIN
VERIFIED ON MATERIALS: ☐ HEAT, LOT OR BATCH NO. ☒ AASHTO / ASTM SPEC. NO. ☐ OSHD LABEL OR MARK ☐ OTHER (EXPLAIN)		
SUPPORT DATA: ☒ TEST RESULT CERTIFICATE ☐ QUALITY COMPL. CERTIFICATE ☐ EQUIP. LIST & DRAWINGS ☐ OTHER (EXPLAIN)		
INSPECTED BY: Rhoda Head	DATE: 7-10-03	
REMARKS: 5 pages		

734-2207 (4-97)

NOV-08-2001 13:36 15036268

CERTIFICATE OF MATERIALS ORIGIN

PROJECT NAME (SECTION)	CONTRACT NO.
Snake River (Nyssa) Bridge	C12770

BID ITEM NO.	BID ITEM NAME
660, 670, 680	ELECTRICAL CONDUIT, 27mm, 35mm & 53mm

DOMESTIC MATERIALS SOURCE (NAME AND ADDRESS)

LTV COPPERWELD
1315 Albert Street
Youngstown, Ohio 44501-1000

DOMESTIC MATERIALS DESCRIPTION

27mm Rigid Steel Conduit
35mm Rigid Steel Conduit
53mm Rigid Steel Conduit

FOREIGN MATERIALS SOURCE INCLUDING MATERIAL OF UNKNOWN ORIGIN (NAME AND ADDRESS)

FOREIGN MATERIALS (OR OF UNKNOWN ORIGIN) DESCRIPTION AND VALUE OF IRON OR STEEL PRODUCT AS IT IS DELIVERED TO THE PROJECT

This certification is made for the purpose of establishing materials acceptance under the Contract Special Provisions titled 00160.20(a) Buy America. All iron or steel manufacturing processes, including protective coatings, for the domestic materials described above occurred within the United States of America.

Manufactures' certificates verifying the origin of the above described domestic materials will be kept on file for three years following final payment. Copies will be furnished to the Engineer upon request.

I declare under penalty of perjury under Oregon and Federal laws that the foregoing is true and correct.

AUTHORIZED REPRESENTATIVE *

NAME: BUCK REBAR
TITLE: President
SIGNATURE: Buck Rebar
DATE: 7-1-03

COMPANY* NAME AND ADDRESS –

WILDISH CONSTRUCTION
PO BOX 1234
IDONTCARE, OREGON 99999

Submit a new certificate for subsequent shipments if any of the above information changes. * May be Contractor, Sub-Contractor or supplier

734-2126 (2-96) ORIGINAL TO PROJECT MANAGER

Oregon Department of Transportation

TEST SUMMARY (A)

(NONFIELD TESTED MATERIALS)

CONTRACT NO.	SHEET
12770	12A

REVIEWERS AND DATES

LINE	DATE OF SAMPLE, TEST, OR INSPECTION	FIR REPORT NO.	DATA SHEET NO. OR MATERIALS LAB. "I" REPORT NO.	LAB REPORT NO.	TEST RESULTS CERTIFICATE	QUALITY COMPLIANCE CERTIFICATE	"Q" WITH MATERIALS "I" REPORT NO.	EQUIPMENT LISTS AND DRAWINGS	CERTIFICATE OF MATERIALS ORIGIN	0670 35mm ELECTRICAL CONDUIT	0680 53mm ELECTRICAL CONDUIT	0690 EXPANSION JOINTS	0700 1067 VERTICAL CONCRETE BRIDGE RAIL	0710 RETAINING WALL, MSE (BR. 19175)	0720 RETAINING WALL, MSE (BR. 19176)	EXPLANATIONS AND NONCOMPLIANCE MATERIALS DESCRIPTION
		F		L	T	Q	QI	E	O	F,Q,O	F,Q,O	F (QPL)	F,Q,O	F,Q,O	F,Q,O	INCORPORATED QUANTITIES
1	2-12-03	1			X	X			X					1 Ea	1 Ea	Proprietary Welded Wire Wall - Hilfiker
2	2-12-03													X	X	Letter to change face detail to incorporate
3																19.0-0 Aggregate Base
4										X	X					See B.I. 660
5													X			See B.I. 550 for PCC & 530-540 for rebar
6														X	X	See Sheets 12B & 12C for MSE Backfill
7																
8																
9																
10																
11																
12																
13																
14																
15																
16																
17																
18																
19																
20																

ITEM NUMBERS AND DESCRIPTIONS

ITEM NO.	UNIT	ORIGINAL QUANTITY	FINAL QUANTITY
0670	M	222	
0680	M	222	
0690	LS	100	
0700	LS	100	
0710	M2	136	
0720	M2	303	

734-1902-A (10-01)

This sheet

was intentionally

left blank.