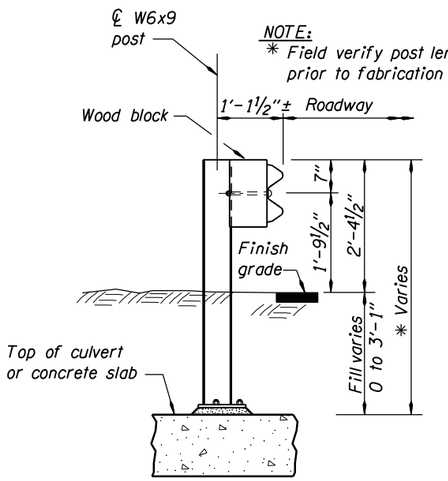

TYPICAL SECTION

No Scale

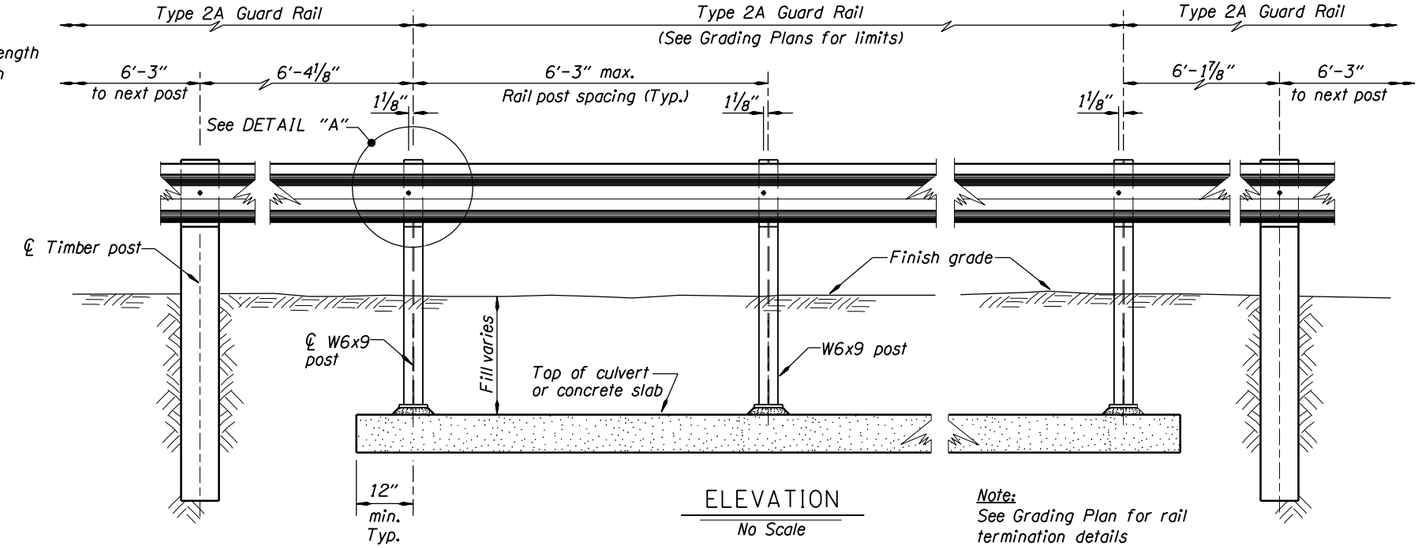

ELEVATION

No Scale

Note:
See Grading Plan for rail termination details

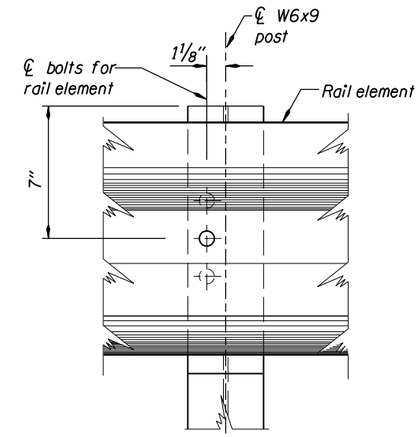

DETAIL "A"

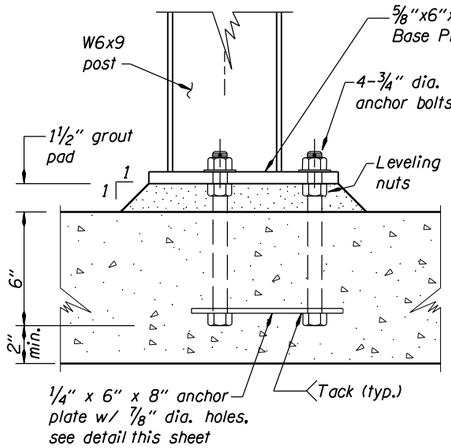

ALTERNATE "A"

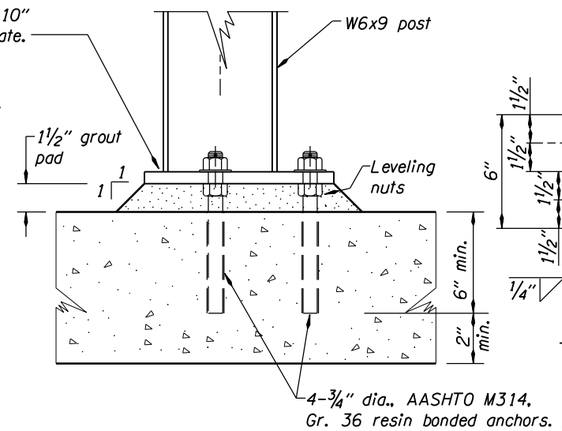

ALTERNATE "B"

BASE PLATE DETAILS

No Scale

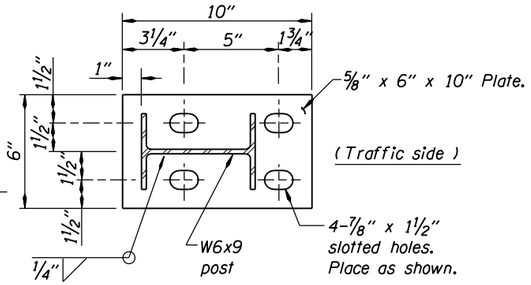

BASE PLATE DETAILS

No Scale

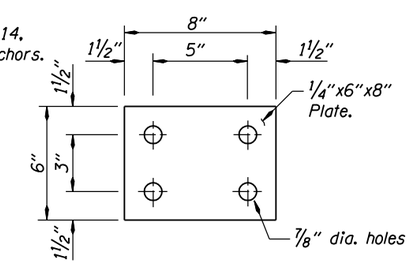

ALTERNATE "A" ANCHOR PLATE

No Scale

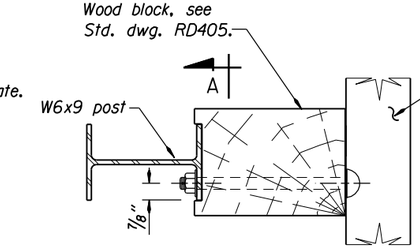

TOP VIEW

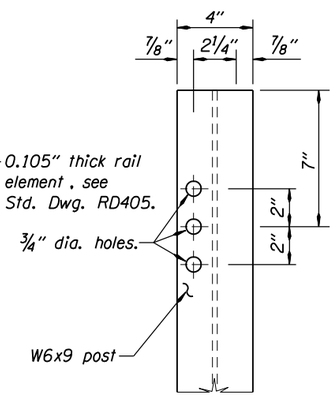

SECTION A-A

GENERAL NOTES:

Use guardrail hardware as shown on Std. Dwg. RD405.
Fabricate railing to the horizontal and vertical alignment of the roadway. Installing posts normal to grade.
Provide all structural steel (except anchor bolts) conforming to AASHTO M183 (ASTM A36).
Provide all bolts meeting ASTM A307.
Hot-dip galvanize all structural steel after fabrication.
Coat all burried steel for immersion exposure with an approved product from the qualified products list for structural coatings (http://www.oregon.gov/ODOT/HWY/CONSTRUCTION/QPL/QPIndex.shtml).
Prepare and coat surfaces according to section 00594 of Oregon Standard Specification.

	DATE	REVISION	BY
1	01-04	General Revision	APS
	06-06	Text Corrections	HMW

The selection and use of this Standard Drawing, while designed in accordance with generally accepted engineering principles and practices, is the sole responsibility of the user and should not be used without consulting a Registered Professional Engineer.

NOTE: All material and workmanship shall be in accordance with the current Oregon Standard Specifications.

OREGON STANDARD DRAWINGS

ACCOMPANIED BY DWGS. RD400, RD405

BRIDGE NO. STANDARD

DATE 2002

CALC. BOOK --

STANDARD

MODIFIED TYPE 2A RAIL

GENERAL DETAILS

SHEET 1 OF 1

DRAWING NO. BR266

BR266

Effective Date: May 1, 2007 - October 31, 2007

[VIEW=L1] [PGRID=]